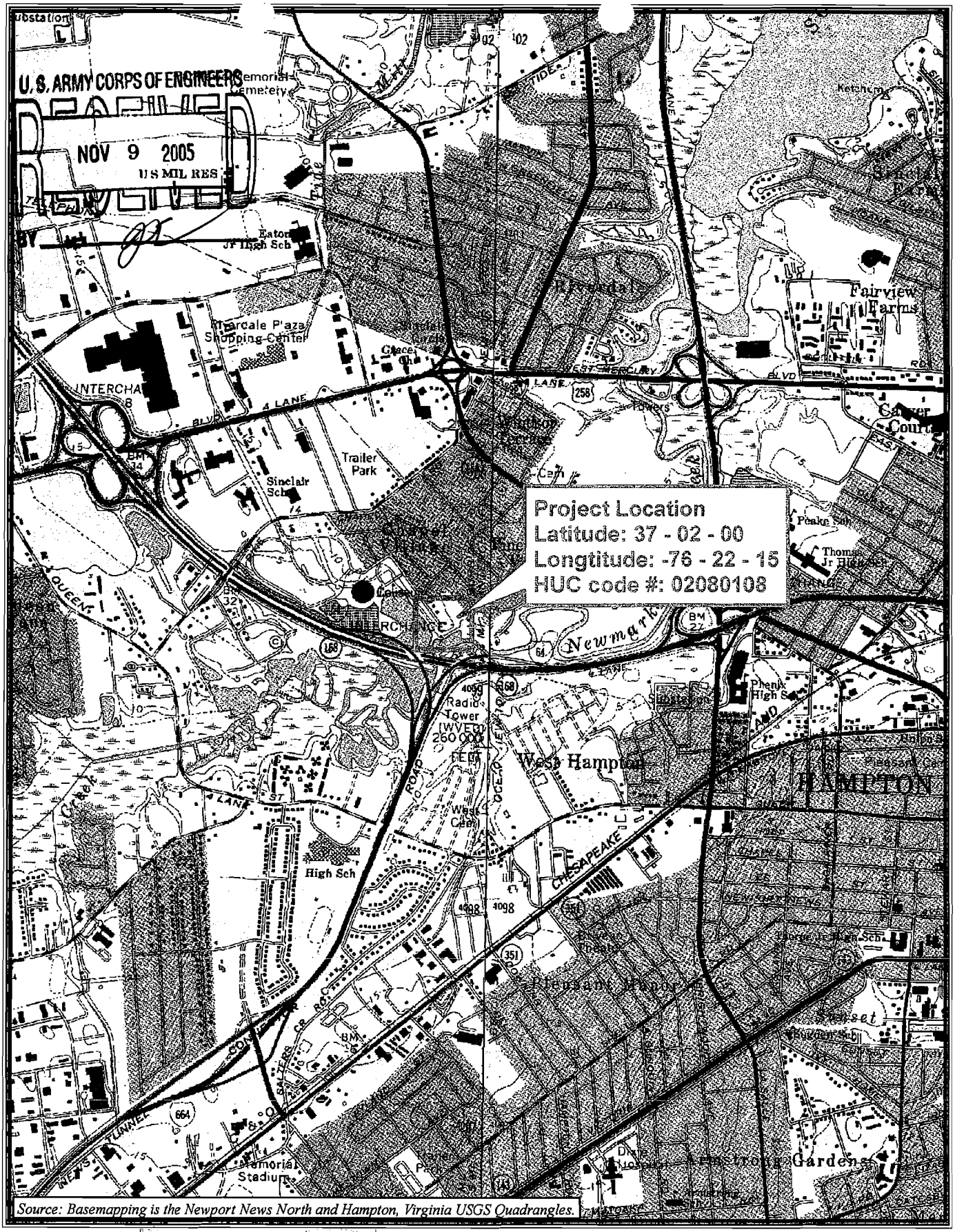

U.S. ARMY CORPS OF ENGINEERS
RECEIVED
NOV 9 2005
U S MIL RES

H 2 O
Project Location

0 1,000 2,000 4,000 Feet

Kimley-Horn and Associates, Inc.

U.S. ARMY CORPS OF ENGINEERS
RECEIVED
NOV 9 2005
BY
RECEIVED
NOV 04 2005
COMMISSION

1

DESIGNED	KHA	SCALE	SCALE
DRAWN	KHA	DATE	MO/YR
CHECKED	KHA	JOB #	018001001

Kimley-Horn and Associates, Inc.

H20 PHASE 2
JOINT PERMIT APPLICATION
OVERALL PLAN VIEW

EXISTING FEATURES - _____
PROPOSED FEATURES - _____

RECEIVED
NOV 04 2005
MARINE RESOURCES
COMMISSION

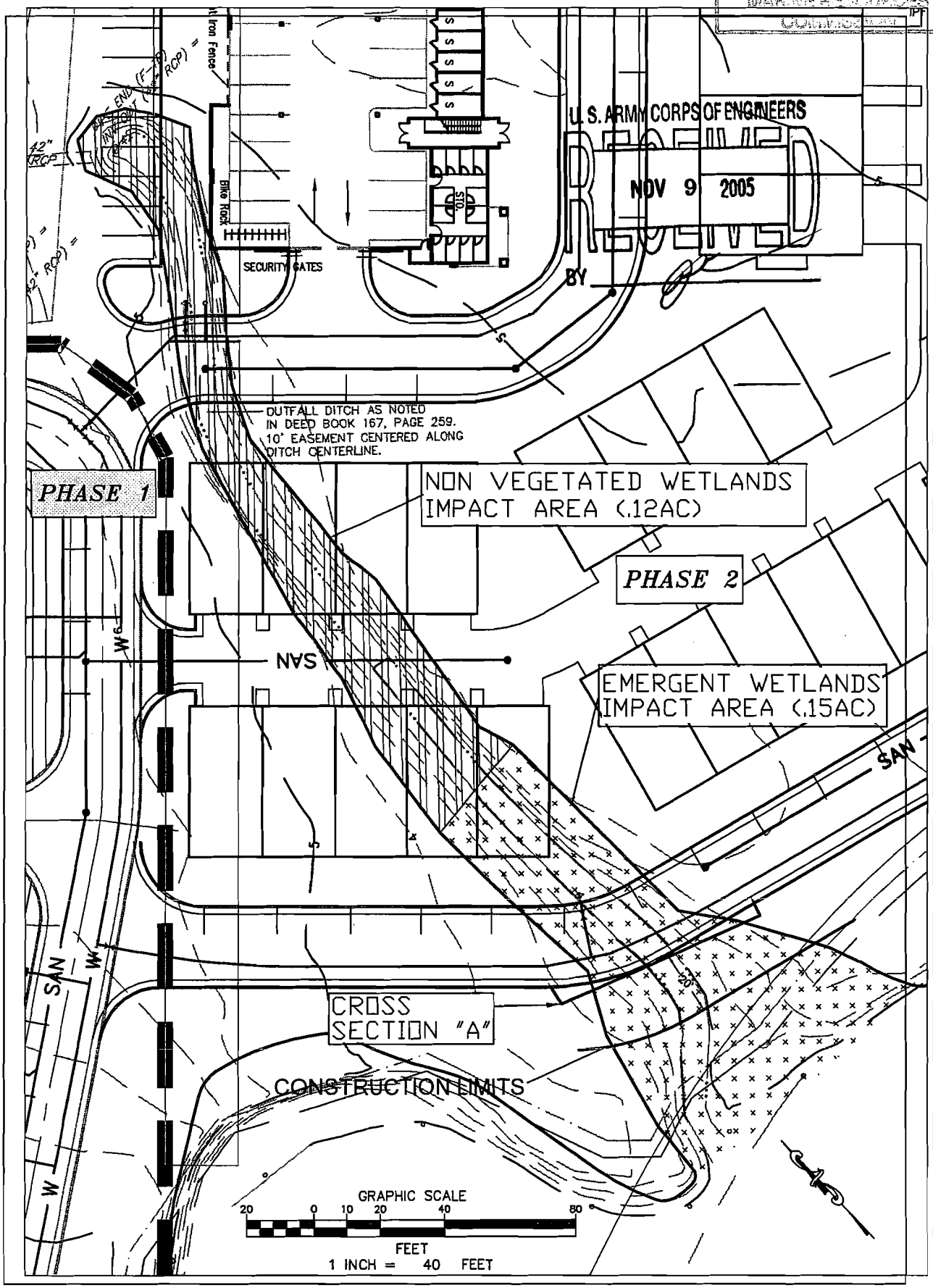

2

DESIGNED | SCALE 1" = 20'
DRAWN | DATE
CHECKED | JOB #

Kimley-Horn and Associates, Inc.

H20 PHASE 2
JOINT PERMIT APPLICATION
PLAN VIEW

EXISTING FEATURES - _____
PROPOSED FEATURES - _____

CROSS SECTION "A"

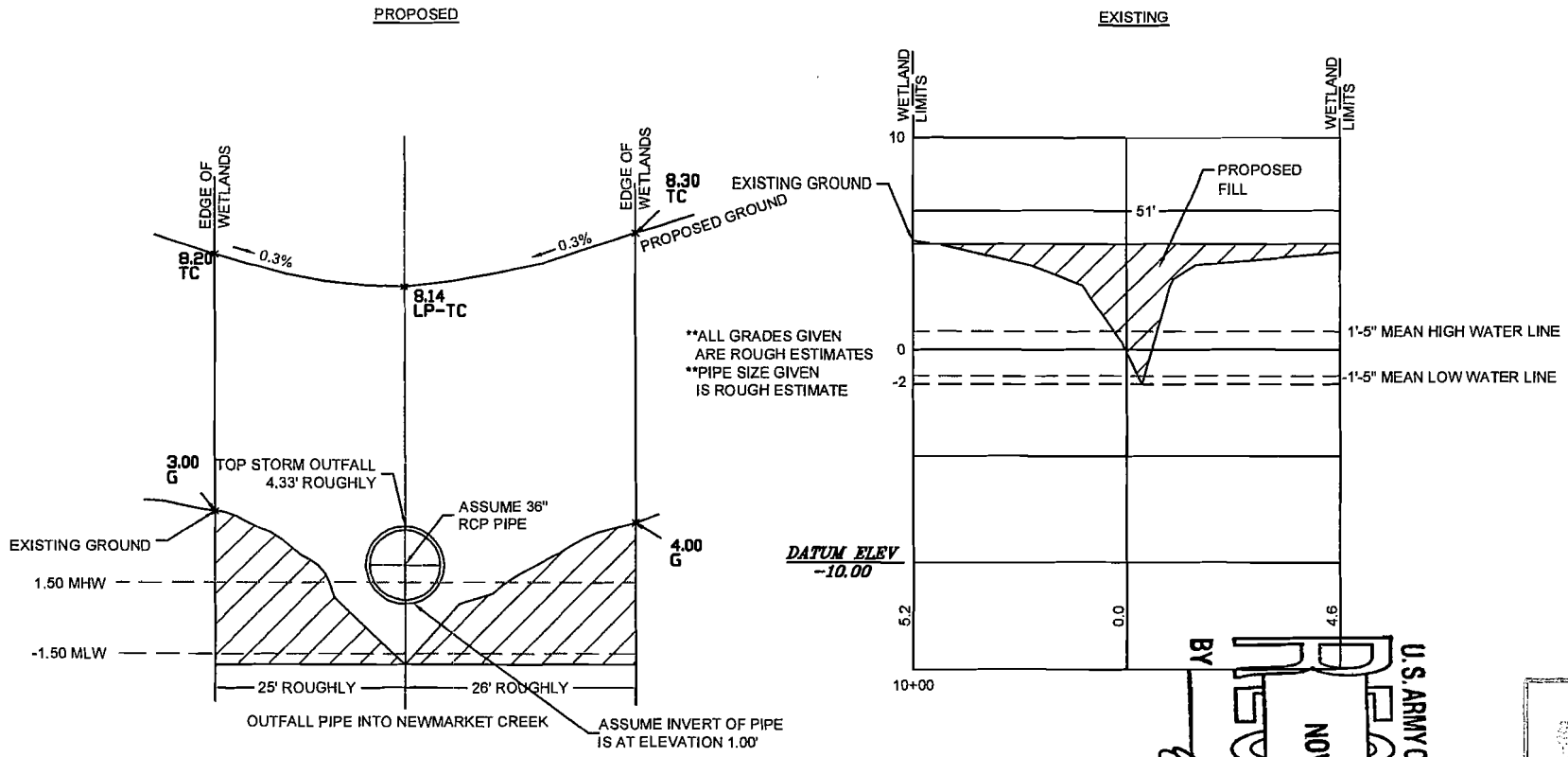

EXAMPLE CROSS SECTION OF PROPOSED OUTFALL PIPE FOR PHASE 2 AT BACK OF CURB.

RECEIVED
NOV 9 2005
BY
U.S. ARMY CORPS OF ENGINEERS

H20 PHASE 2
JOINT PERMIT APPLICATION
CROSS SECTION

Kimley-Horn and Associates, Inc.

DESIGNED	KHA	SCALE	SCALE
DRAWN	KHA	DATE	MO/YR
CHECKED	KHA	JOB #	016001001