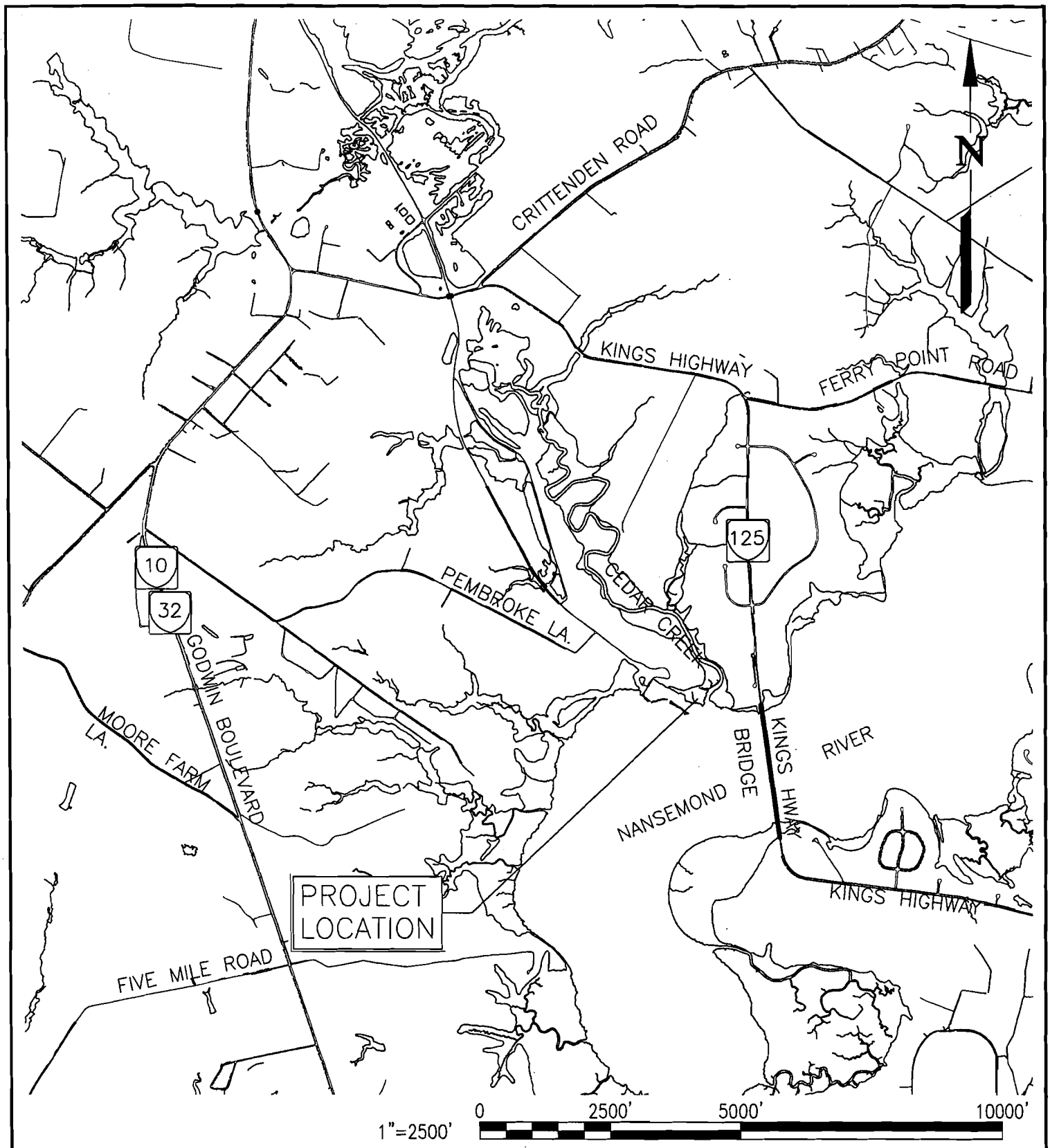

DATUM: NAVD 88	LONESTAR LAKES BOAT RAMP	IN: NANSEMOND RIVER WATERSHED
MLW = −1.52'	LOCATION MAP	CITY: SUFFOLK
APPLICANT: CITY OF SUFFOLK	CLARK • NEXSEN Architecture & Engineering 6160 KEMPSVILLE CIRCLE, SUITE 200A NORFOLK, VIRGINIA	DATE: AUGUST 15, 2005
		SHEET 1 OF 10

Received 12/9/05

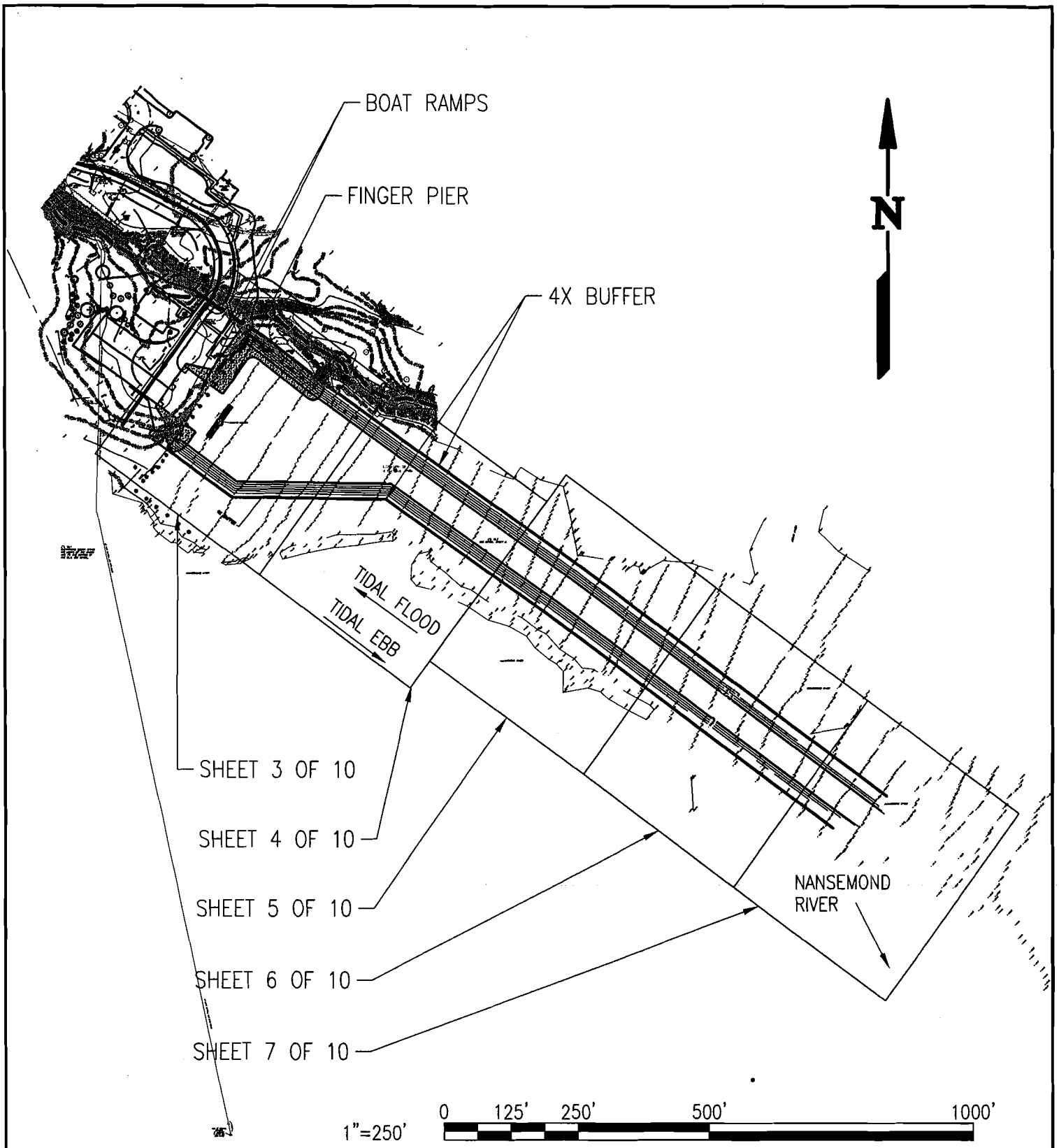

DATUM: NAVD 88	LONESTAR LAKES BOAT RAMP	IN: NANSEMOND RIVER WATERSHED
MLW = −1.52'	INDEX MAP	CITY: SUFFOLK
APPLICANT: CITY OF SUFFOLK	CLARK • NEXSEN Architecture & Engineering 6160 KEMPSVILLE CIRCLE, SUITE 200A NORFOLK, VIRGINIA	DATE: AUGUST 15, 2005
		SHEET 2 OF 10

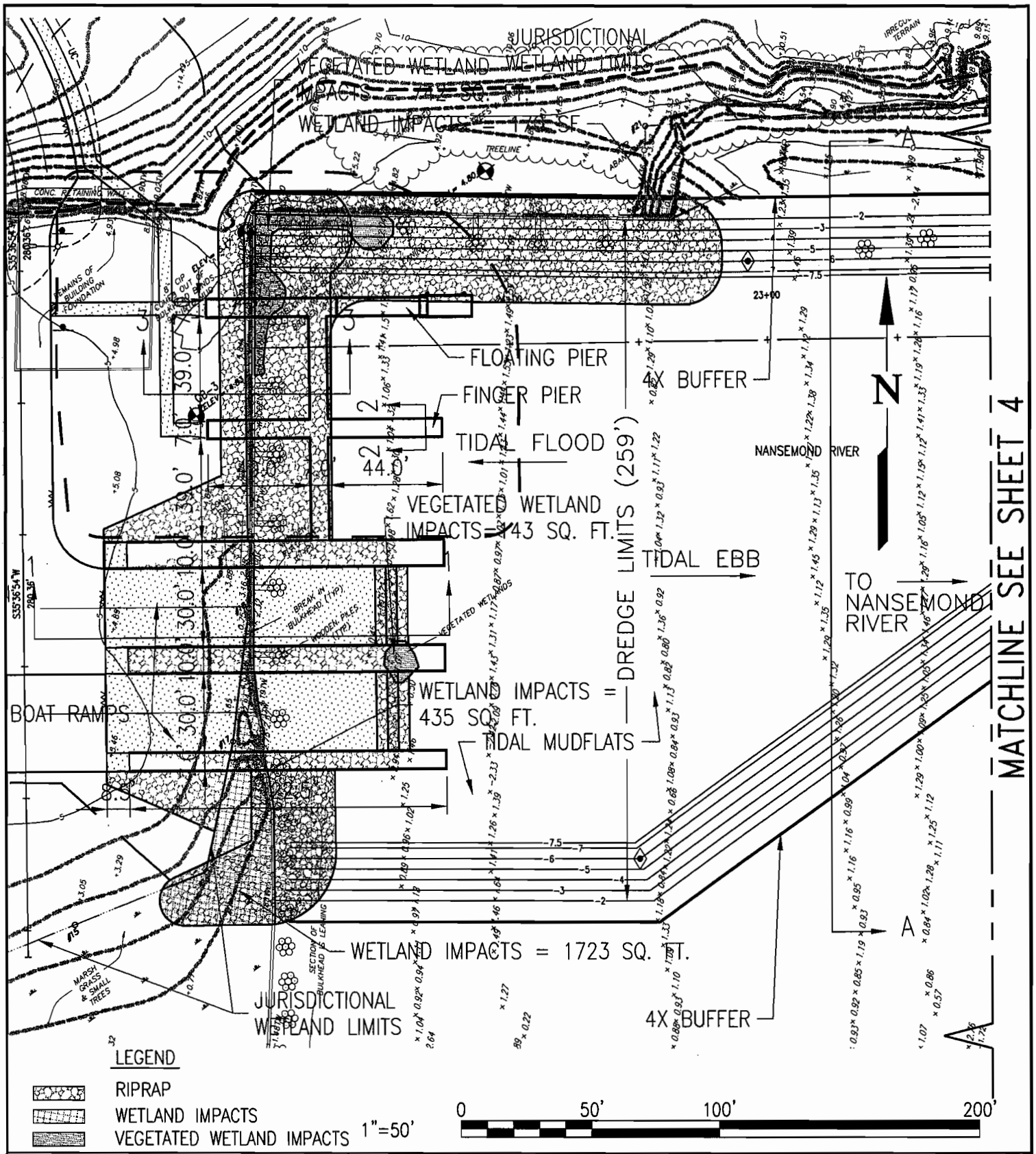

DATUM: NAVD 88	LONESTAR LAKES BOAT RAMP	IN: NANSEMOND RIVER WATERSHED
MLW = −1.52'	PLAN	CITY: SUFFOLK
APPLICANT: CITY OF SUFFOLK	CLARK • NEXSEN Architecture & Engineering 6160 KEMPSVILLE CIRCLE, SUITE 200A NORFOLK, VIRGINIA	DATE: AUGUST 15, 2005 SHEET 3 OF 10

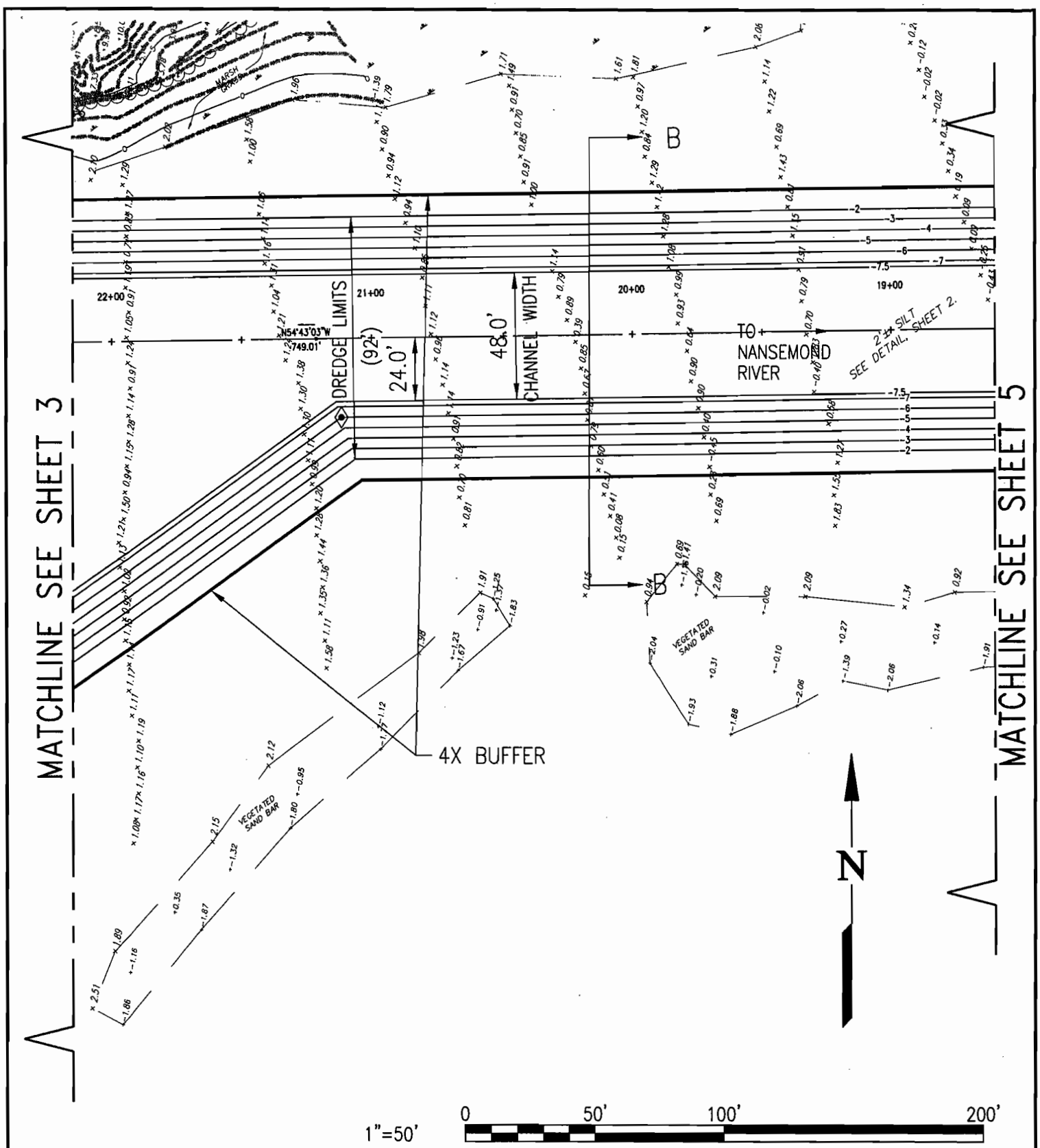

DATUM: NAVD 88	LONESTAR LAKES BOAT RAMP	IN: NANSEMOND RIVER WATERSHED
MLW = −1.52'	PLAN	CITY: SUFFOLK
APPLICANT: CITY OF SUFFOLK	CLARK • NEXSEN Architecture & Engineering 6160 KEMPSVILLE CIRCLE, SUITE 200A NORFOLK, VIRGINIA	DATE: AUGUST 15, 2005
		SHEET 4 OF 10

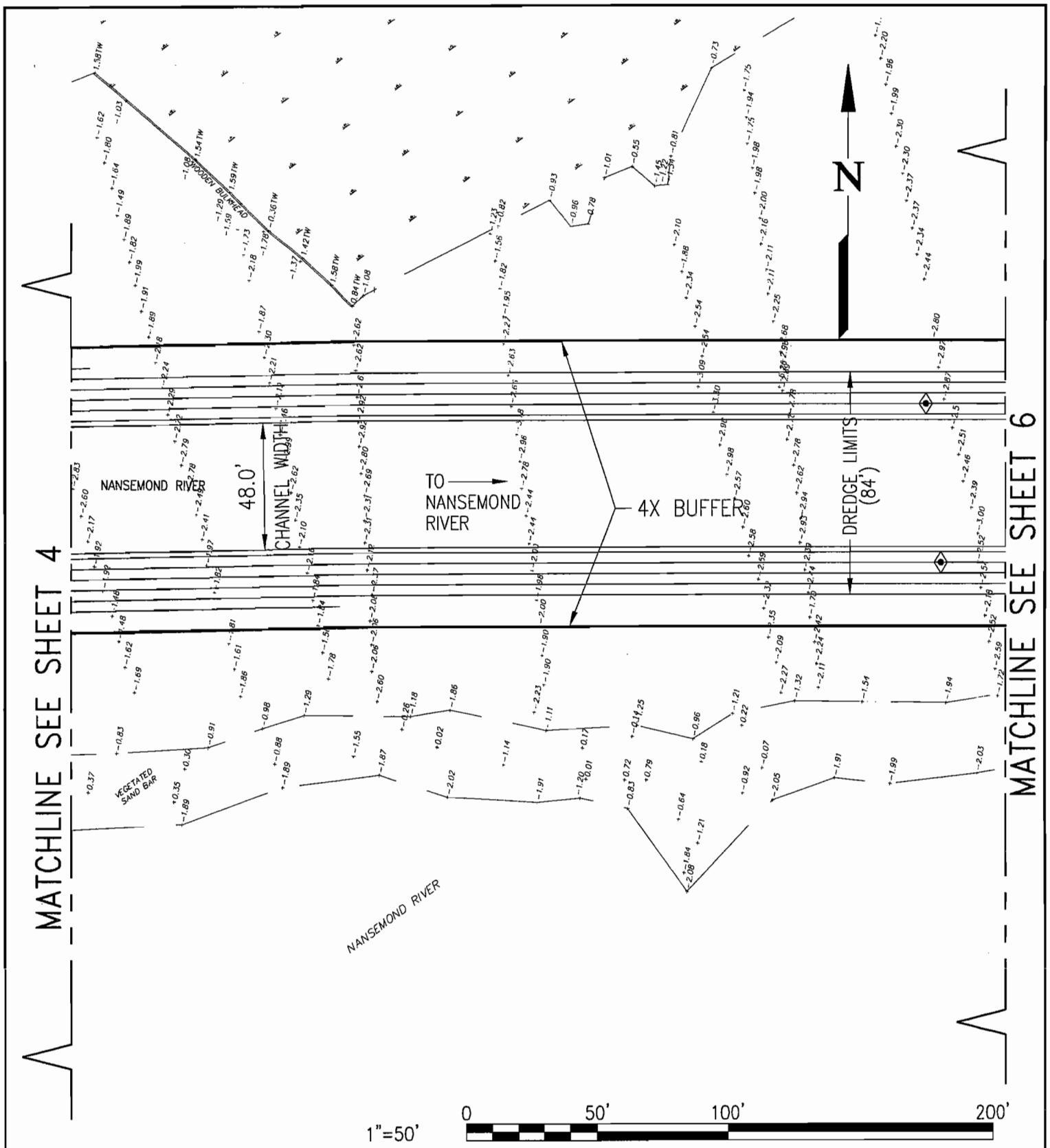

DATUM: NAVD 88

MLW = −1.52'

APPLICANT: CITY OF SUFFOLK

LONESTAR LAKES BOAT RAMP

PLAN

IN: NANSEMOND RIVER WATERSHED

CITY: SUFFOLK

DATE: AUGUST 15, 2005

SHEET 5 OF 10

RECEIVED
NOV 03 2005
MARINE RESOURCES COMMISSION

ADDITIONAL INFO REVISION

CLARK • NEXSEN
Architecture & Engineering
6160 KEMPSVILLE CIRCLE, SUITE 200A NORFOLK, VIRGINIA

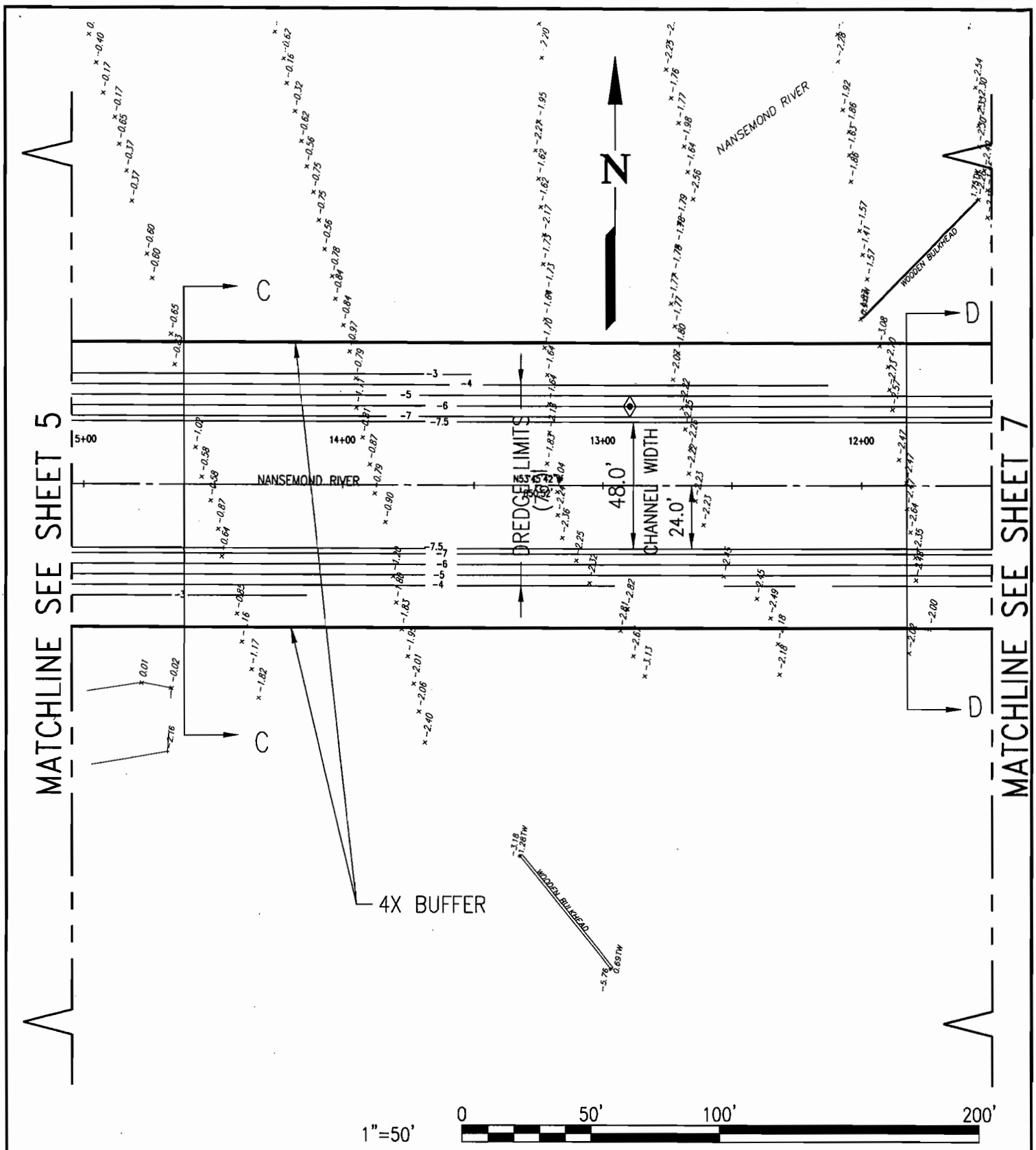

DATUM: NAVD 88	LONESTAR LAKES BOAT RAMP	IN: NANSEMOND RIVER WATERSHED
MLW = −1.52'	PLAN	CITY: SUFFOLK
APPLICANT: CITY OF SUFFOLK	CLARK • NEXSEN Architecture & Engineering 6160 KEMPSVILLE CIRCLE, SUITE 200A NORFOLK, VIRGINIA	DATE: AUGUST 15, 2005
		SHEET 6 OF 10

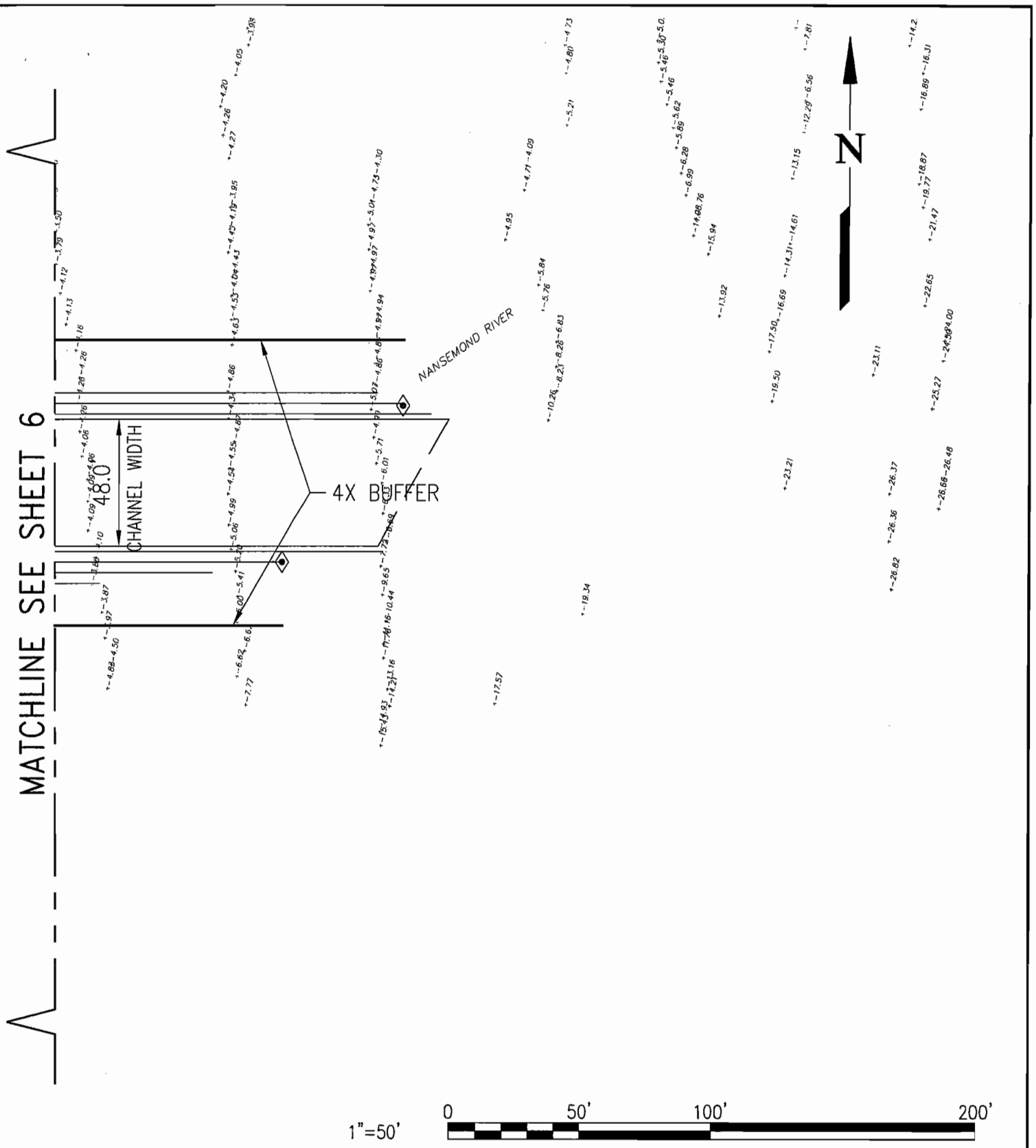

DATUM: NAVD 88

MLW = −1.52'

APPLICANT: CITY OF SUFFOLK

NOV 03 2005
MARINE RESOURCES COMMISSION

LONESTAR LAKES BOAT RAMP

ADDITIONAL INFO REVISION

CLARK • NEXSEN
Architecture & Engineering
6160 KEMPSVILLE CIRCLE, SUITE 200A NORFOLK, VIRGINIA

IN: NANSEMOND RIVER WATERSHED

CITY: SUFFOLK

DATE: AUGUST 15, 2005

SHEET 7 OF 10

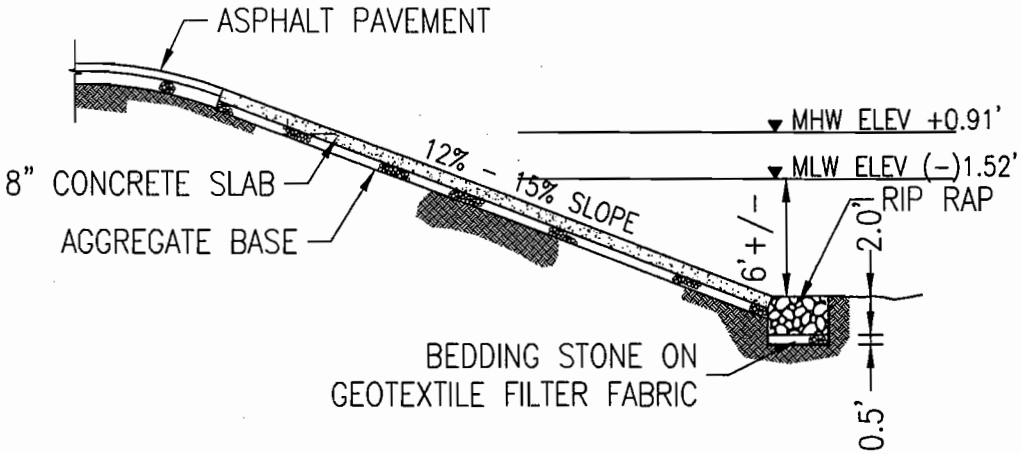

SECTION 1–1

1" = 10'

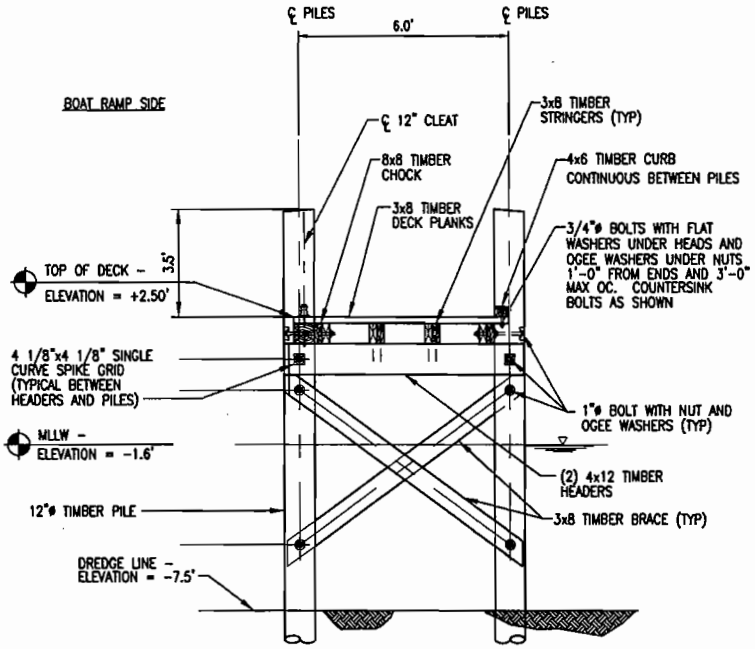

SECTION 2–2

NOT TO SCALE

DATUM: NAVD 88	LONESTAR LAKES BOAT RAMP	IN: NANSEMOND RIVER WATERSHED
MLW = -1.52'	SECTIONS	CITY: SUFFOLK
APPLICANT: CITY OF SUFFOLK	CLARK • NEXSEN Architecture & Engineering 6160 KEMPSVILLE CIRCLE, SUITE 200A NORFOLK, VIRGINIA	DATE: AUGUST 15, 2005 SHEET 8 OF 10

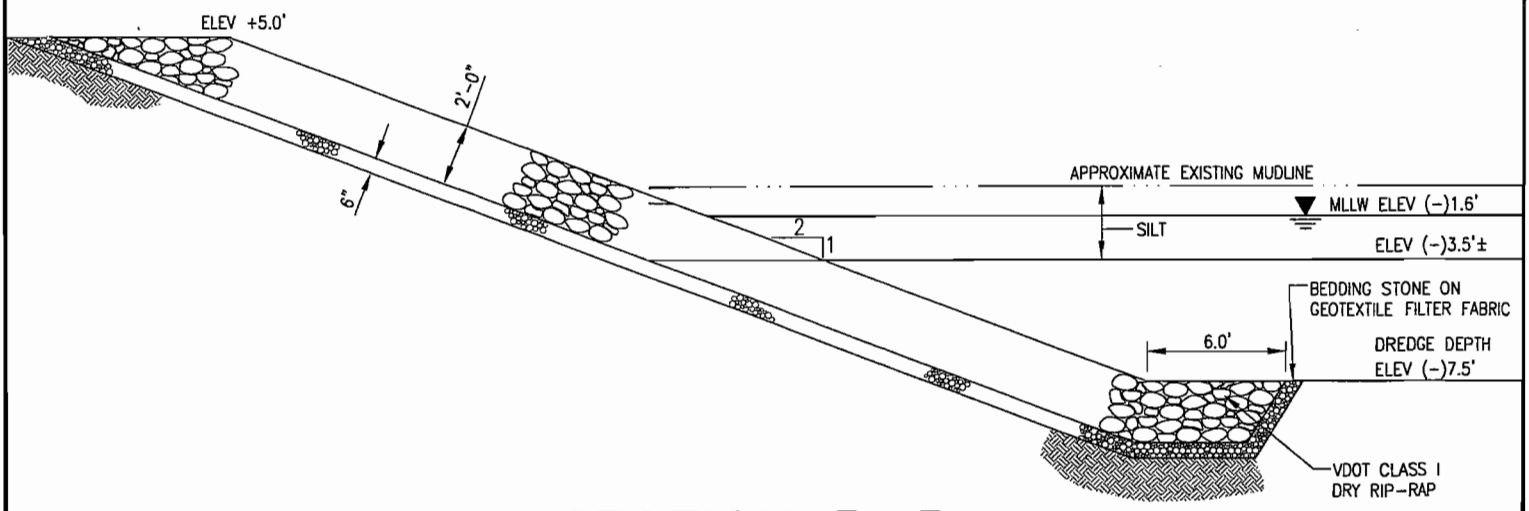

SECTION 3-3

SCALE: 1" = 25'

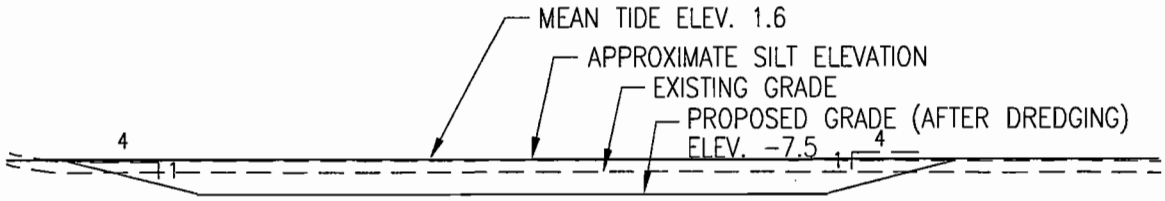

SECTION A-A

SCALE: 1" = 50'

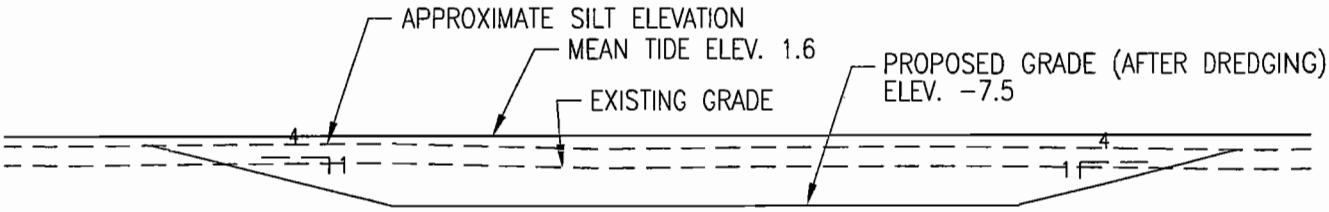

SECTION B-B

SCALE: 1" = 25'

DATUM: NAVD 88	LONESTAR LAKES BOAT RAMP	IN: NANSEMOND RIVER WATERSHED
MLW = -1.52'	ADDITIONAL INFO REVISION	CITY: SUFFOLK
APPLICANT: CITY OF SUFFOLK	CLARK • NEXSEN Architecture & Engineering 6160 KEMPSVILLE CIRCLE, SUITE 200A NORFOLK, VIRGINIA	DATE: AUGUST 15, 2005 SHEET 9 OF 10

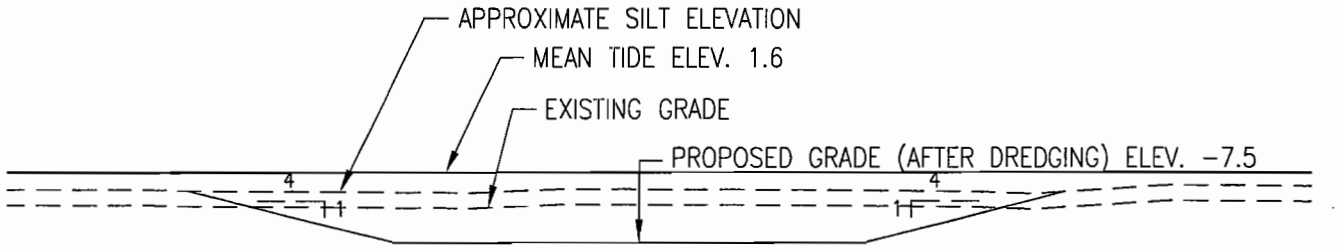

SECTION C–C

1" = 25'

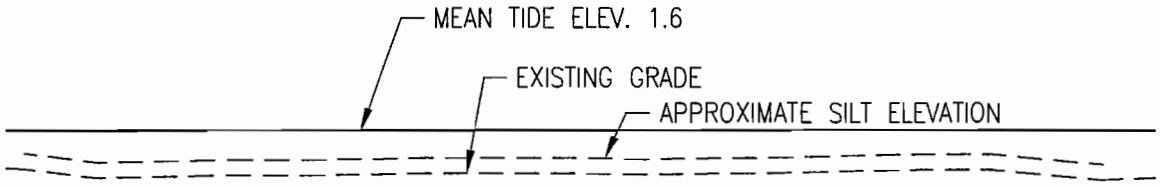

SECTION D–D

1" = 25'

DATUM: NAVD 88	LONESTAR LAKES BOAT RAMP	IN: NANSEMOND RIVER WATERSHED
MLW = -1.52'	ADDITIONAL INFO SECTIONS REVISION	CITY: SUFFOLK
APPLICANT: CITY OF SUFFOLK	CLARK • NEXSEN Architecture & Engineering 6160 KEMPSVILLE CIRCLE, SUITE 200A NORFOLK, VIRGINIA	DATE: AUGUST 15, 2005
		SHEET 10 OF 10

RECEIVED NOV 0 9 2005 MARINE RESOURCES COMMISSION

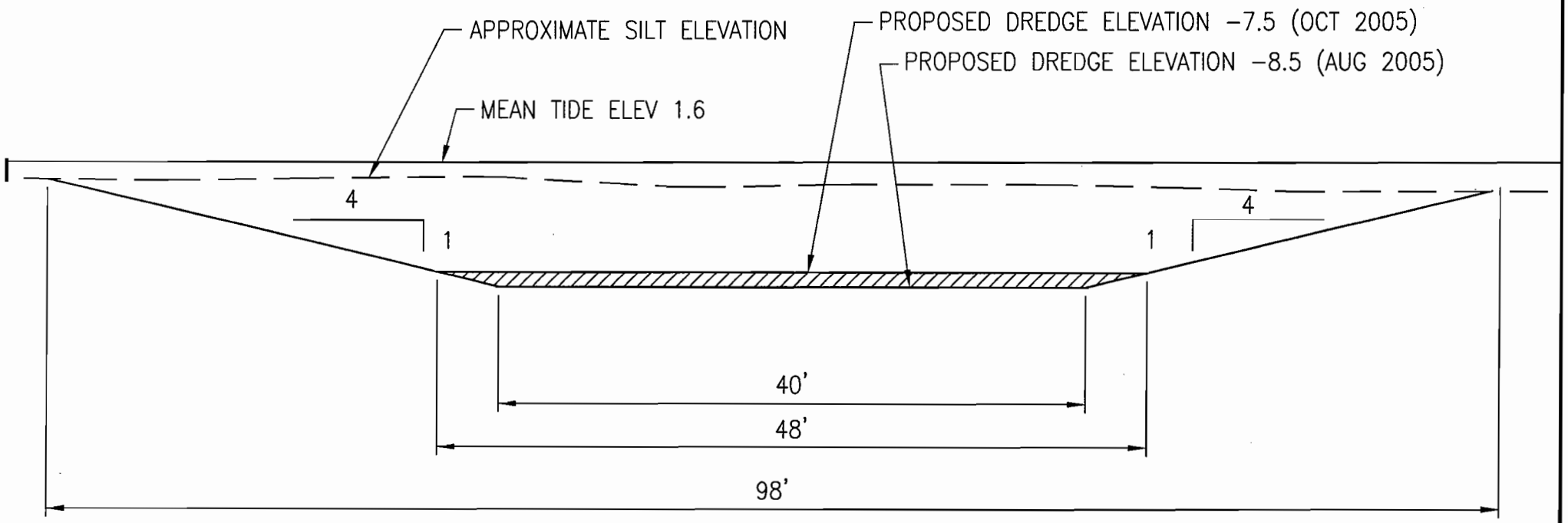

SECTION B–B

SCALE: 1" = 10'

DREDGE SECTION DETAIL CLARIFICATION

CLARK • NEXSEN
Architecture & Engineering

DEC 7, 2005

ADDITIONAL INFO
REVISION

CURVE DATA TABLE				
CURVE ID	RADIUS	ARC LENGTH	DELTA ANGLE	TANGENT
C4	72.00	113.10	90°00'00"	72.00

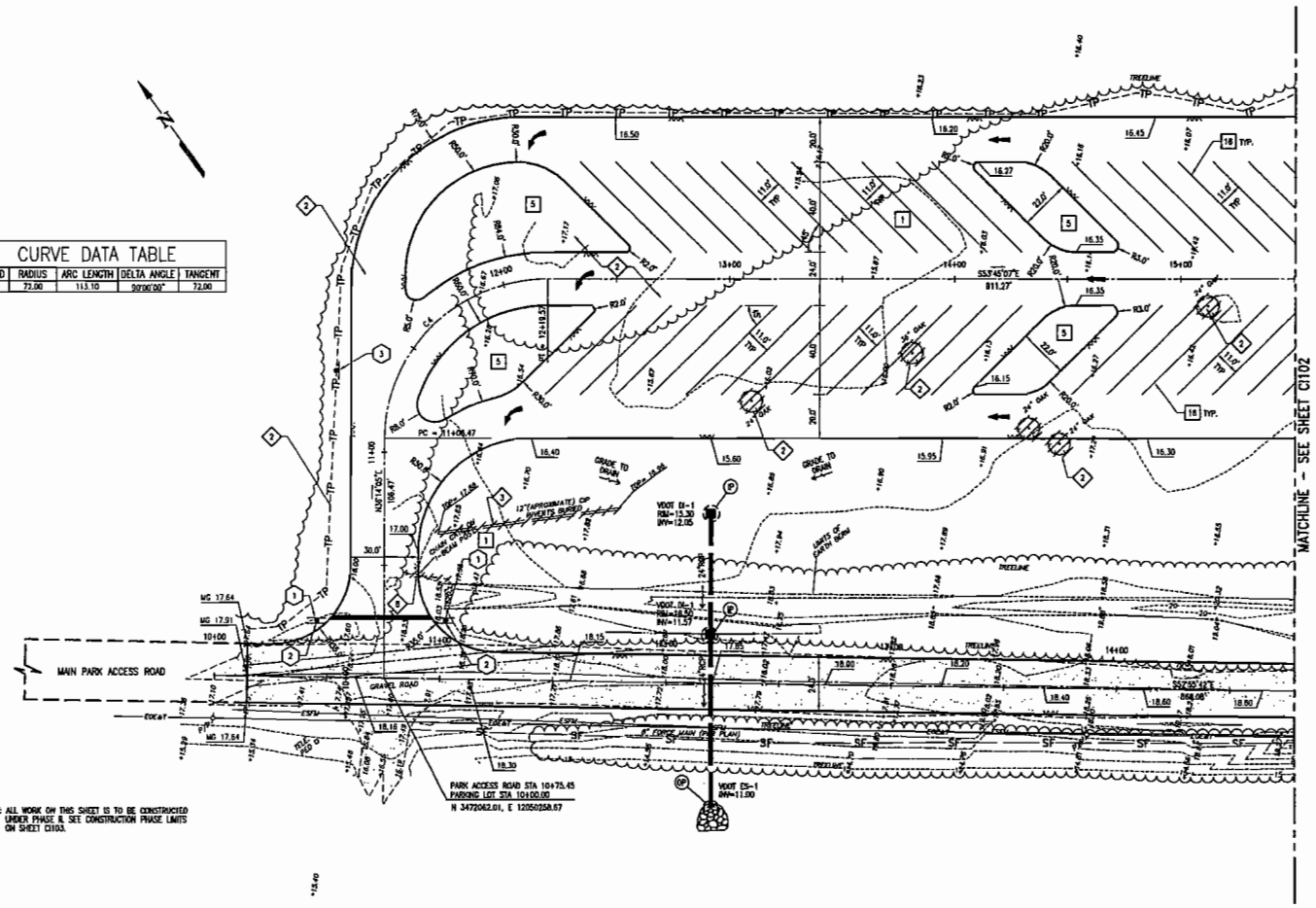

NOTE: ALL WORK ON THIS SHEET IS TO BE CONSTRUCTED UNDER PHASE II. SEE CONSTRUCTION PHASE LIMITS ON SHEET C1103.

DEMOLITION NOTES

1. REMOVE EXISTING GRAVEL ROAD
2. REMOVE EXISTING TREE(S)
3. REMOVE EXISTING CULVERT
4. REMOVE RETAINING WALL
5. REMOVE FOUNDATION
6. REMOVE EXISTING BULKHEAD / SOLDIER PILES
7. REMOVE EXISTING CONCRETE WALK
8. REMOVE EXISTING CHAIN GATE AND POST
9. REMOVE EXISTING CONCRETE TUNNEL
10. REMOVE EXISTING POST
11. REMOVE EXISTING FENCE
12. REMOVE EXISTING CLEANOUT AND COVER
13. POLE TO BE RELOCATED BY OTHERS

CONSTRUCTION NOTES

1. NEW ASPHALT PAVEMENT
2. NEW GRADED SHOULDER
3. NEW CULVERT
4. NEW CONCRETE SIDEWALK
5. NEW TOPSOIL AND SEED
6. NEW 4" YELLOW PAVEMENT MARKING
7. NEW TIMBER DECK
8. NEW FLOATING DOCK
9. NEW ALUMINUM BROW
10. NEW CROSSWALK
11. NEW RIP-RAP SLOPE
12. NEW FINGER PIER
13. NEW BOAT RAMP
14. NEW WHEELSTOP
15. NEW CHANNEL MARKER
16. NEW 4" WHITE PAVEMENT MARKING
17. NEW HANDICAP PARKING SIGN
18. 1.0' WIDE CURB CUT W/ CI PLATE

GRAPHIC SCALE(S)

1"=25' 0 25' 50' 100'

CLARK•NEXSEN
Architecture & Engineering
6160 KEMPSVILLE CIRCLE
NORFOLK, VIRGINIA 23502
757-455-5800 FAX 757-455-5638
WWW.CLARKNEXSEN.COM

100% SUBMITTAL

LONE STAR LAKES BOAT RAMP
CITY OF SUFFOLK, VIRGINIA
DEPARTMENT OF PARKS AND RECREATION

CN NO: 1923.2M
DATE: SEPTEMBER 2005
DESIGN: KJH
DRAWN: BJL
REVIEW: DAB

REVISIONS
No. Date Description By

DEMOLITION AND SITE PLAN SHEET

C1101

SHEET 3 OF

H:\PJ\1923\1923J-Lonestar\Phase A\CAD\C\C1101.dwg Fri, 21 Oct 2005 - 1:53pm nlancke

ADDITIONAL INFO
REVISION

NOV 03 2005

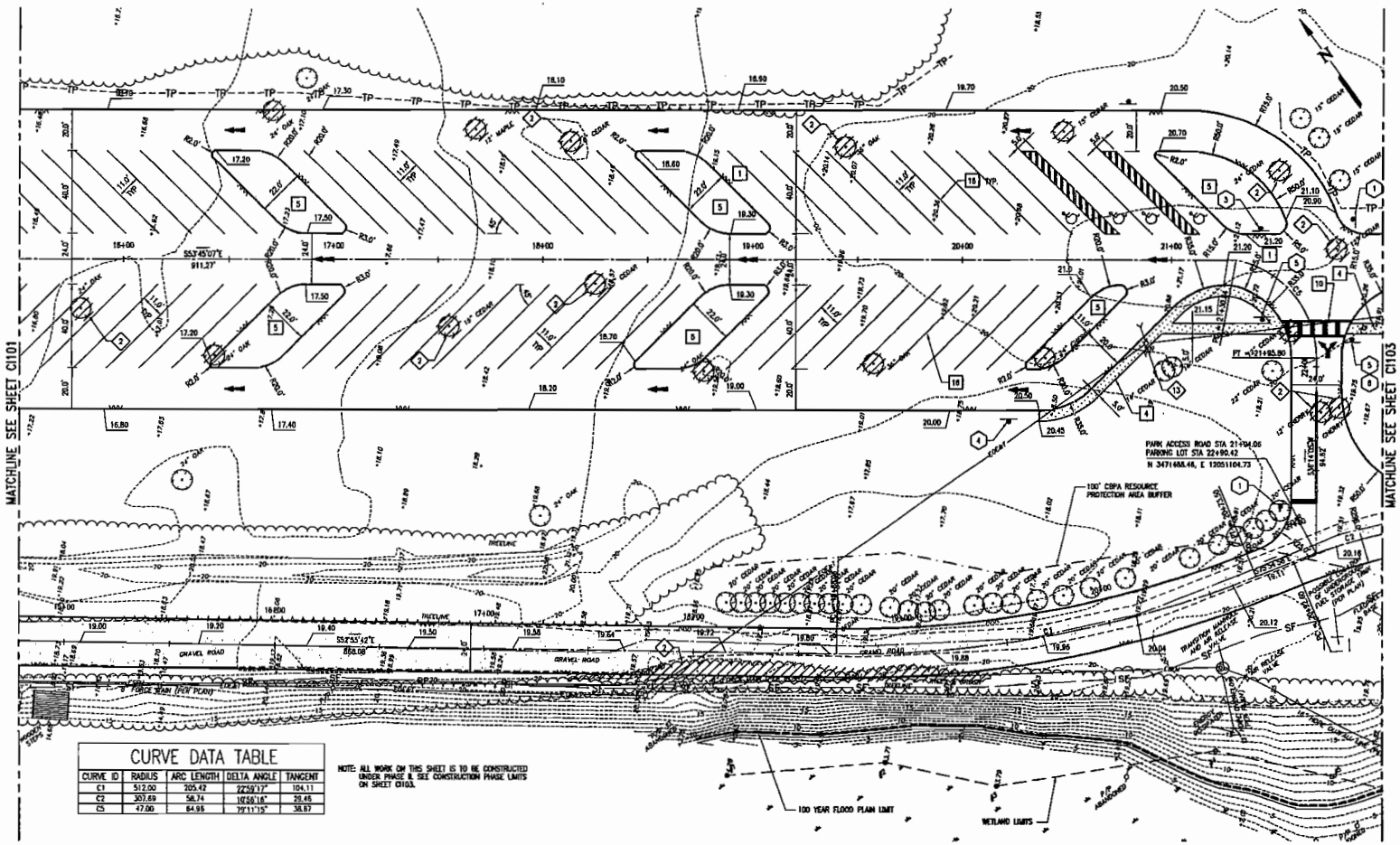

CURVE DATA TABLE				
CURVE ID	RADIUS	ARC LENGTH	DELTA ANGLE	TANGENT
C1	512.00	205.42	22°59'17"	104.11
C2	307.69	58.74	10°56'16"	29.46
C5	47.00	64.95	79°11'15"	38.87

NOTE: ALL WORK ON THIS SHEET IS TO BE CONSTRUCTED UNDER PHASE II. SEE CONSTRUCTION PHASE LIMITS ON SHEET C1103.

DEMOLITION NOTES

1. REMOVE EXISTING GRAVEL ROAD
2. REMOVE EXISTING TREE(S)
3. REMOVE EXISTING CULVERT
4. REMOVE RETAINING WALL
5. REMOVE FOUNDATION
6. REMOVE EXISTING BULKHEAD / SOLDIER PILES
7. REMOVE EXISTING CONCRETE WALK
8. REMOVE EXISTING CHAIN AND GATE POST
9. REMOVE EXISTING CONCRETE TUNNEL
10. REMOVE EXISTING POST
11. REMOVE EXISTING FENCE
12. REMOVE EXISTING CLEANOUT AND COVER
13. POLE TO BE RELOCATED BY OTHERS

CONSTRUCTION NOTES

1. NEW ASPHALT PAVEMENT
2. NEW GRADED SHOULDER
3. NEW CULVERT
4. NEW CONCRETE SIDEWALK
5. TOPSOIL AND SEED
6. NEW 4" YELLOW PAVEMENT MARKING
7. NEW TIMBER DECK
8. NEW FLOATING DOCK
9. NEW ALUMINUM GROW
10. NEW CROSSWALK
11. NEW RIP-RAP SLOPE
12. NEW FINGER PIER
13. NEW BOAT RAMP
14. NEW WHEELSTOP
15. NEW CHANNEL MARKER
16. NEW 4" WHITE PAVEMENT MARKING
17. NEW HANDICAP PARKING SIGN
18. 1.0' WIDE CURB CUT W/ CI PLATE

GRAPHIC SCALE(S)

1"=25' 0 25' 50' 100'

CLARK•NEXSEN
Architecture & Engineering
6160 KEMPSVILLE CIRCLE
NORFOLK, VIRGINIA 23502
757-455-5800 FAX 757-455-5638
WWW.CLARKNEXSEN.COM

100% SUBMITTAL

LONE STAR LAKES BOAT RAMP
CITY OF SUFFOLK, VIRGINIA
DEPARTMENT OF PARKS AND RECREATION

CN NO: 1923.2M
DATE: SEPTEMBER 2005
DESIGN: KJH
DRAWN: BJL
REVIEW: DAB
REVISIONS
No. Date Description By

DEMOLITION AND SITE PLAN SHEET

C1102

SHEET 5 OF

H:\PA\1923\1923J-Lonestar\Phase II\CAD\C\C1102.dwg Fri, 21 Oct 2005 - 1:59pm nlonske

ADDITIONAL INFO
REVISION

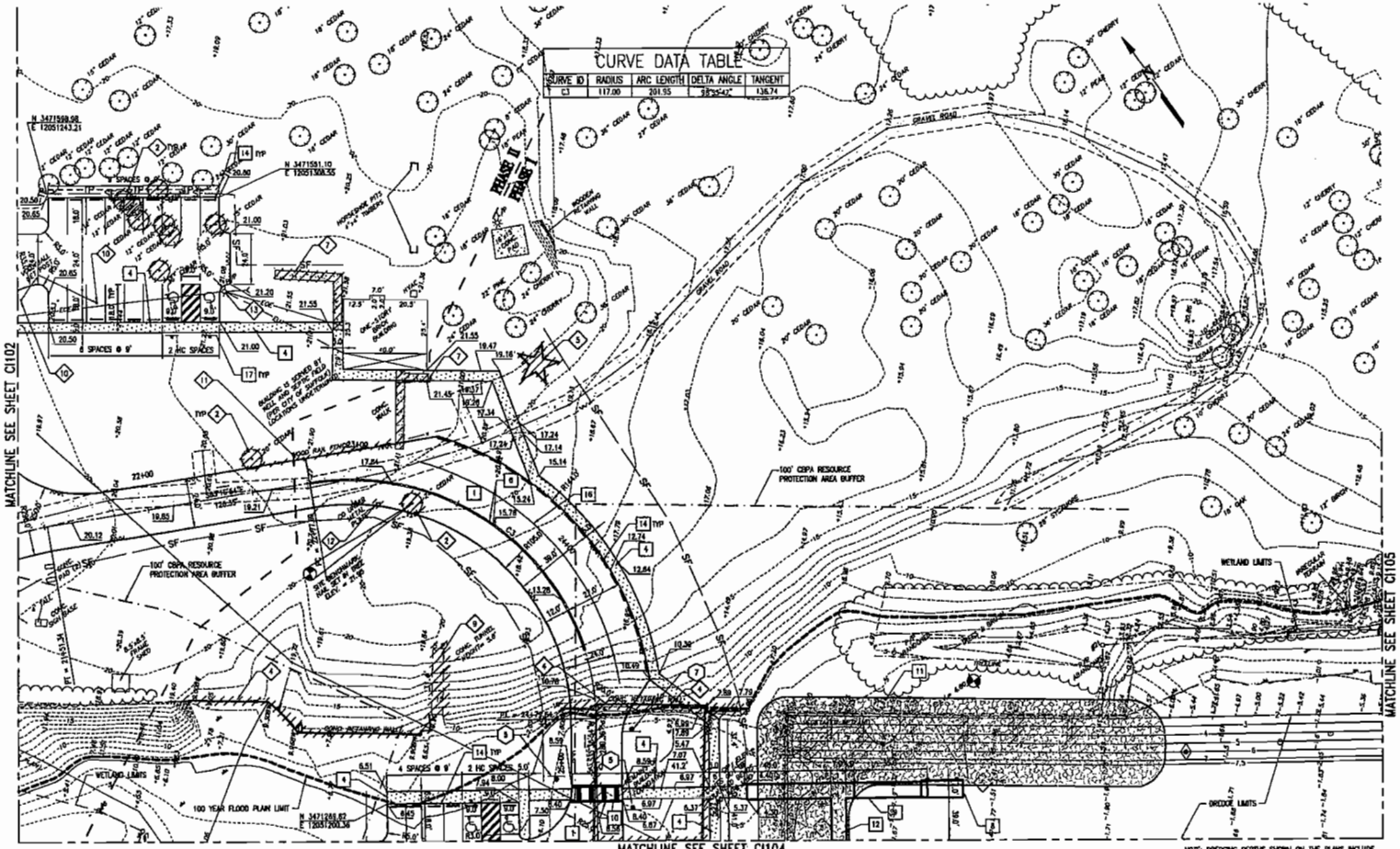

CURVE DATA TABLE

SURVE ID	RADIUS	ARC LENGTH	DELTA ANGLE	TANGENT
C3	117.00	201.95	98°55'42"	136.74

NOTE: DREDGING DEPTHS SHOWN ON THE PLANS INCLUDE ONE (1) FOOT FOR CONTRACTOR OVERDREDGE.

DEMOLITION NOTES

1. REMOVE EXISTING GRAVEL ROAD
2. REMOVE EXISTING TREE(S)
3. REMOVE EXISTING CULVERT
4. REMOVE RETAINING WALL
5. REMOVE FOUNDATION
6. REMOVE EXISTING BULKHEAD / SOLDIER PILES
7. REMOVE EXISTING CONCRETE WALK
8. REMOVE EXISTING CHAIN AND GATE POST
9. REMOVE EXISTING CONCRETE TUNNEL
10. REMOVE EXISTING POST
11. REMOVE EXISTING FENCE
12. REMOVE EXISTING CLEANOUT AND COVER
13. POLE TO BE RELOCATED BY OTHERS

CONSTRUCTION NOTES

1. NEW ASPHALT PAVEMENT
2. NEW GRADED SHOULDER
3. NEW CULVERT
4. NEW CONCRETE SIDEWALK
5. TOPSOIL AND SEED
6. NEW 4" YELLOW PAVEMENT MARKING
7. NEW TIMBER DECK
8. NEW FLOATING DOCK
9. NEW ALUMINUM BROW
10. NEW CROSSWALK
11. NEW RIP-RAP SLOPE
12. NEW FINGER PIER
13. NEW BOAT RAMP
14. NEW WHEELSTOP
15. NEW CHANNEL MARKER
16. NEW 4" WHITE PAVEMENT MARKING
17. NEW HANDICAP PARKING SIGN
18. 1.0' WIDE CURB CUT W/ CI PLATE

GRAPHIC SCALE(S)

1"=25' 0 25' 50' 100'

CLARK•NEXSEN
Architecture & Engineering

6160 KEMPSVILLE CIRCLE
NORFOLK, VIRGINIA 23502
757-455-5800 FAX 757-455-5638
WWW.CLARKNEXSEN.COM

100% SUBMITTAL

LONE STAR LAKES BOAT RAMP
CITY OF SUFFOLK, VIRGINIA
DEPARTMENT OF PARKS AND RECREATION

CN NO: 1923.2M
DATE: SEPTEMBER 2005
DESIGN: KJH
DRAWN: BJL
REVIEW: DAB
REVISIONS
No. Date Description By

DEMOLITION AND SITE PLAN SHEET

CI103

SHEET 6 OF

H:\PJ\1923\1923J-Lonestar\Phase I\CAD\C\CI103.dwg Thu, 03 Nov 2005 - 11:12am Montania

ADDITIONAL INFO
REVISION

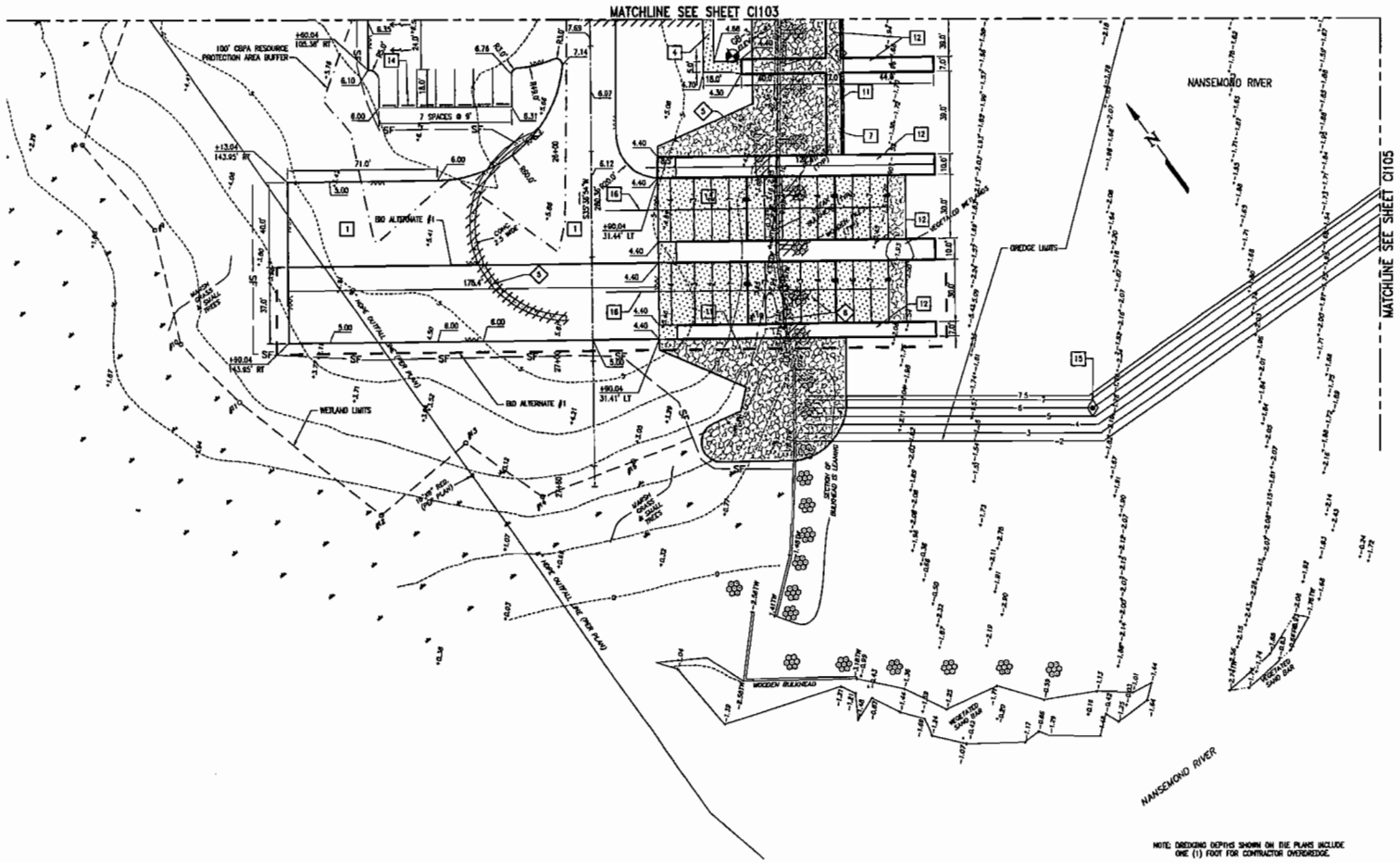

DEMOLITION NOTES

1. REMOVE EXISTING GRAVEL ROAD
2. REMOVE EXISTING TREE(S)
3. REMOVE EXISTING CULVERT
4. REMOVE RETAINING WALL
5. REMOVE FOUNDATION
6. REMOVE EXISTING BULKHEAD / SOLDIER PILES
7. REMOVE EXISTING CONCRETE WALK
8. REMOVE EXISTING CHAIN AND GATE POST
9. REMOVE EXISTING CONCRETE TUNNEL
10. REMOVE EXISTING POST
11. REMOVE EXISTING FENCE
12. REMOVE EXISTING CLEANOUT AND COVER
13. POLE TO BE RELOCATED BY OTHERS

CONSTRUCTION NOTES

1. NEW ASPHALT PAVEMENT
2. NEW GRADED SHOULDER
3. NEW CULVERT
4. NEW CONCRETE SIDEWALK
5. TOPSOIL AND SEED
6. NEW 4" YELLOW PAVEMENT MARKING
7. NEW TIMBER DECK
8. NEW FLOATING DOCK
9. NEW ALUMINUM GROW
10. NEW CROSSWALK
11. NEW RIP-RAP SLOPE
12. NEW FINGER PIER
13. NEW BOAT RAMP
14. NEW WHEELSTOP
15. NEW CHANNEL MARKER
16. NEW 4" WHITE PAVEMENT MARKING
17. NEW HANDICAP PARKING SIGN
18. 1.0' WIDE CURB CUT W/ CI PLATE

GRAPHIC SCALE(S)

1"=25' 0 25' 50' 100'

CLARK•NEXSEN
Architecture & Engineering
6160 KEMPSVILLE CIRCLE
NORFOLK, VIRGINIA 23502
757-455-5800 FAX 757-455-5638
WWW.CLARKNEXSEN.COM

100% SUBMITTAL

LONE STAR LAKES BOAT RAMP
CITY OF SUFFOLK, VIRGINIA
DEPARTMENT OF PARKS AND RECREATION

CN NO: 1923.2M
DATE: SEPTEMBER 2005
DESIGN: KJH
DRAWN: BJL
REVIEW: DAB

REVISIONS
No. Date Description By

DEMOLITION AND SITE PLAN SHEET

C1104

SHEET 7 OF

H:\F:\1923\1923J-Lonestar\Phase 1\CAD\C\C1104.dwg Thu, 03 Nov 2005 - 11:13am Montanio

CLARK • NEXSEN
Architecture & Engineering

Lone Star Lakes Boat Ramp, Phase I from Chuckatuck Quadrangle

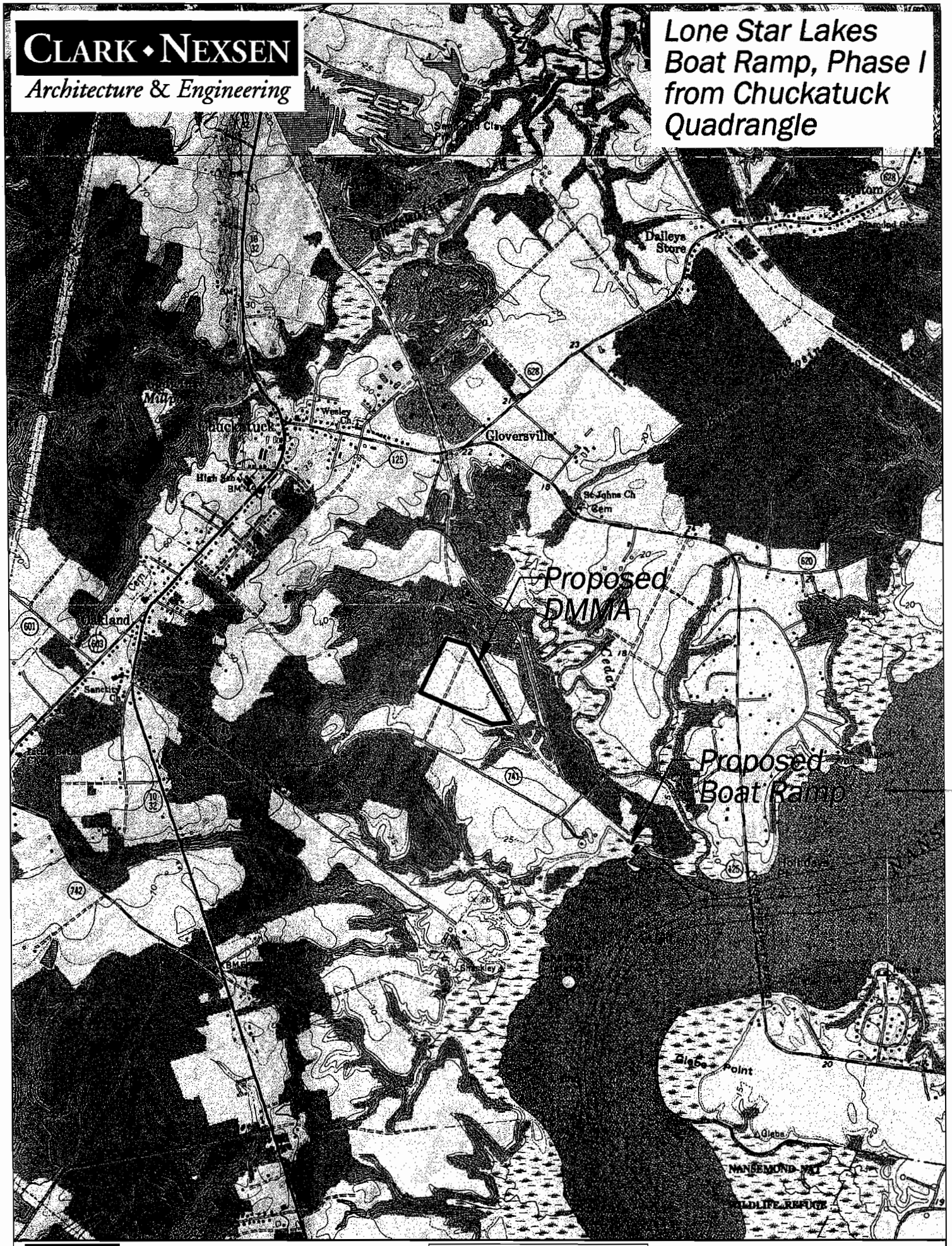

DELORME

© 2002 DeLorme. 3-D TopoQuads ®. Data copyright of content owner.
www.delorme.com