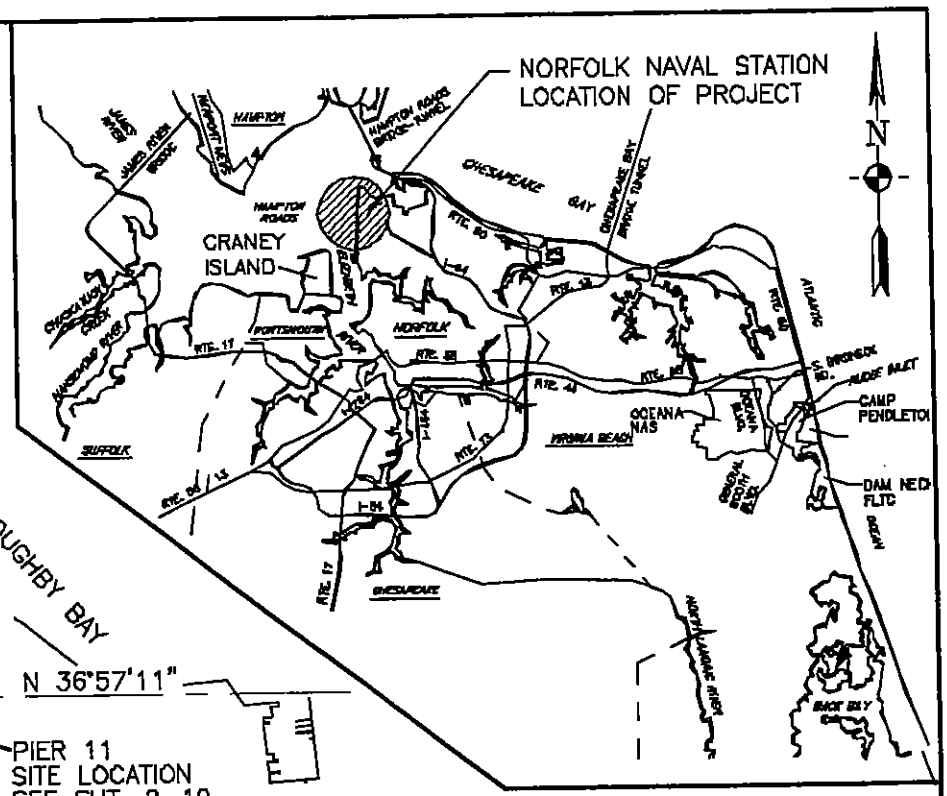

VICINITY MAP

NOT TO SCALE

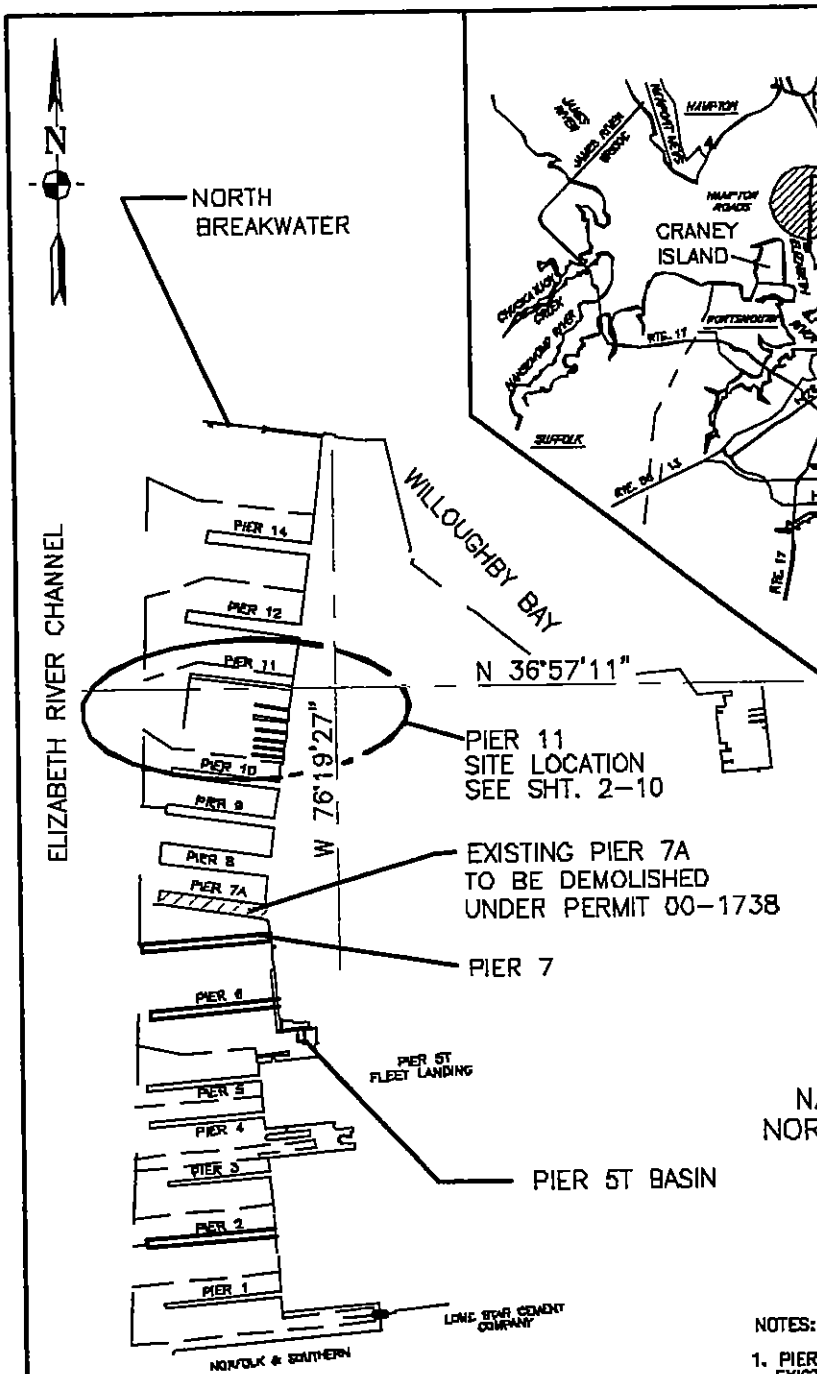

LOCATION MAP

NOT TO SCALE

RECEIVED
DEC 03 2004
MARINE RESOURCES COMMISSION
BY

NAVAL STATION
NORFOLK, VIRGINIA

NOTES:

1. PIER 11REPLACEMENT SHALL CONSIST OF THE DEMOLITION OF EXISTING PIER 11 AND DREDGING EXISTING PIER 11 FOOTPRINT TO -15.85 METERS (-52').

U. S. ARMY CORPS OF ENGINEERS
RECEIVED
DEC 9 2004

PROPOSE: PIER 11 REPLACEMENT DATUM: NAVAL STATION MEAN LOW WATER = 0.00 ADJACENT PROPERTY OWNER (1) U.S. NAVY	VICINITY MAP AND LOCATION MAP	PROPOSED PIER 11 REPLACEMENT IN: ELIZABETH RIVER AT: NORFOLK NAVAL BASE CITY: NORFOLK STATE: VIRGINIA APPLICATION BY: ATLANTIC DIVISION NAVAL FACILITY ENGR. COMM. SHEET 1 OF 7 DATE: 9-15-2005

RECEIVED
DEC 0 3 2004
MARINE RESOURCES COMMISSION
By

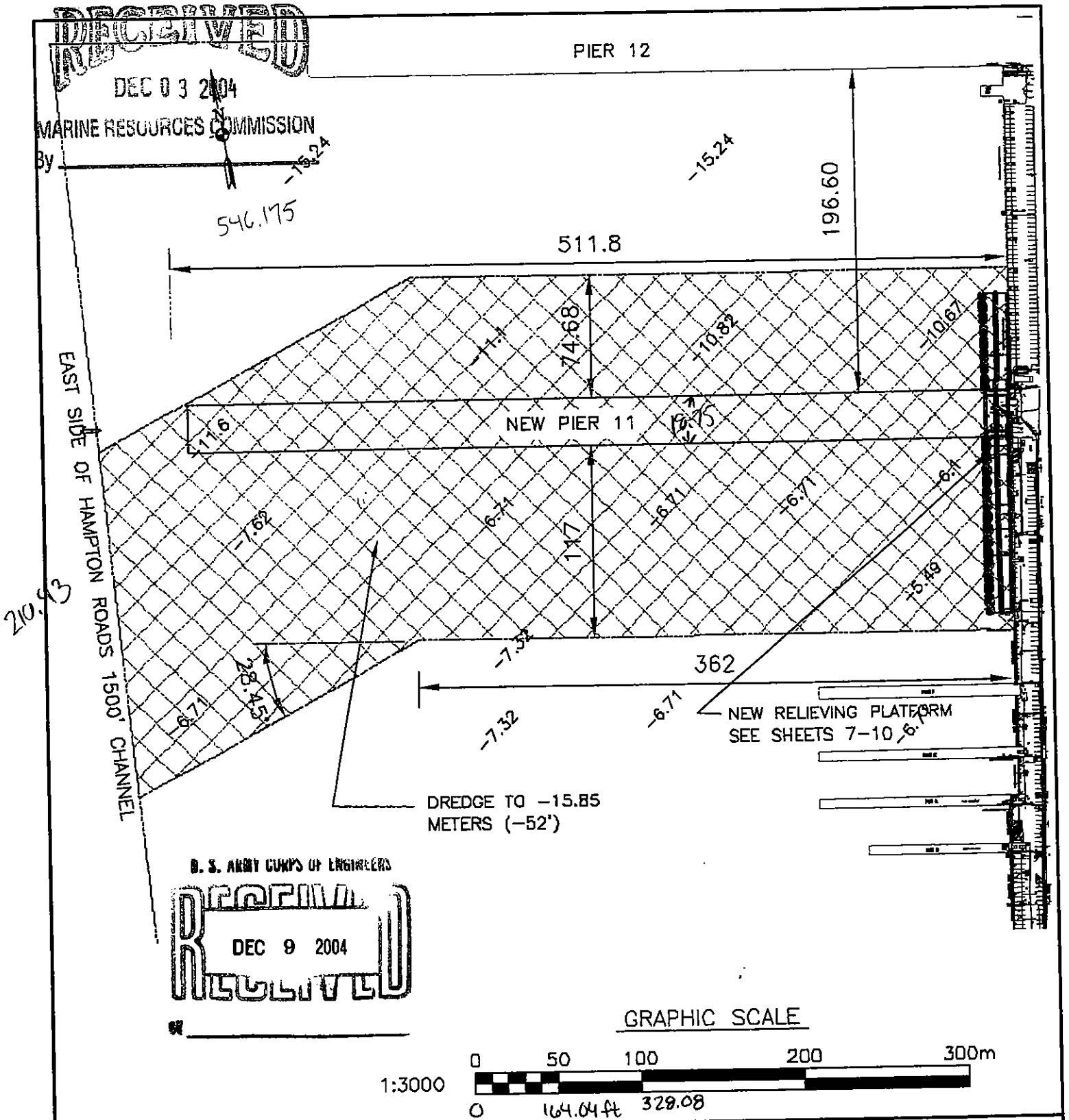

U. S. ARMY CORPS OF ENGINEERS
RECEIVED
DEC 9 2004

GRAPHIC SCALE

1:3000 0 50 100 200 300m

0 164.04 ft 328.08

PROPOSE: PIER 11 REPLACEMENT DATUM: NAVAL STATION MEAN LOW WATER = 0.00 ADJACENT PROPERTY OWNER (1) U.S. NAVY	PIER 11 SITE PLAN NEW DREDGING	PROPOSED PIER 11 REPLACEMENT IN: ELIZABETH RIVER AT: NORFOLK NAVAL BASE CITY: NORFOLK STATE: VIRGINIA APPLICATION BY: ATLANTIC DIVISION NAVAL FACILITY ENGR. COMM. SHEET 2 OF 7 DATE: 9-15-2004

RECEIVED
DEC 0 3 2004
MARINE RESOURCES COMMISSION
By _____

U. S. ARMY CORPS OF ENGINEERS
RECEIVED
DEC 9 2004
_____

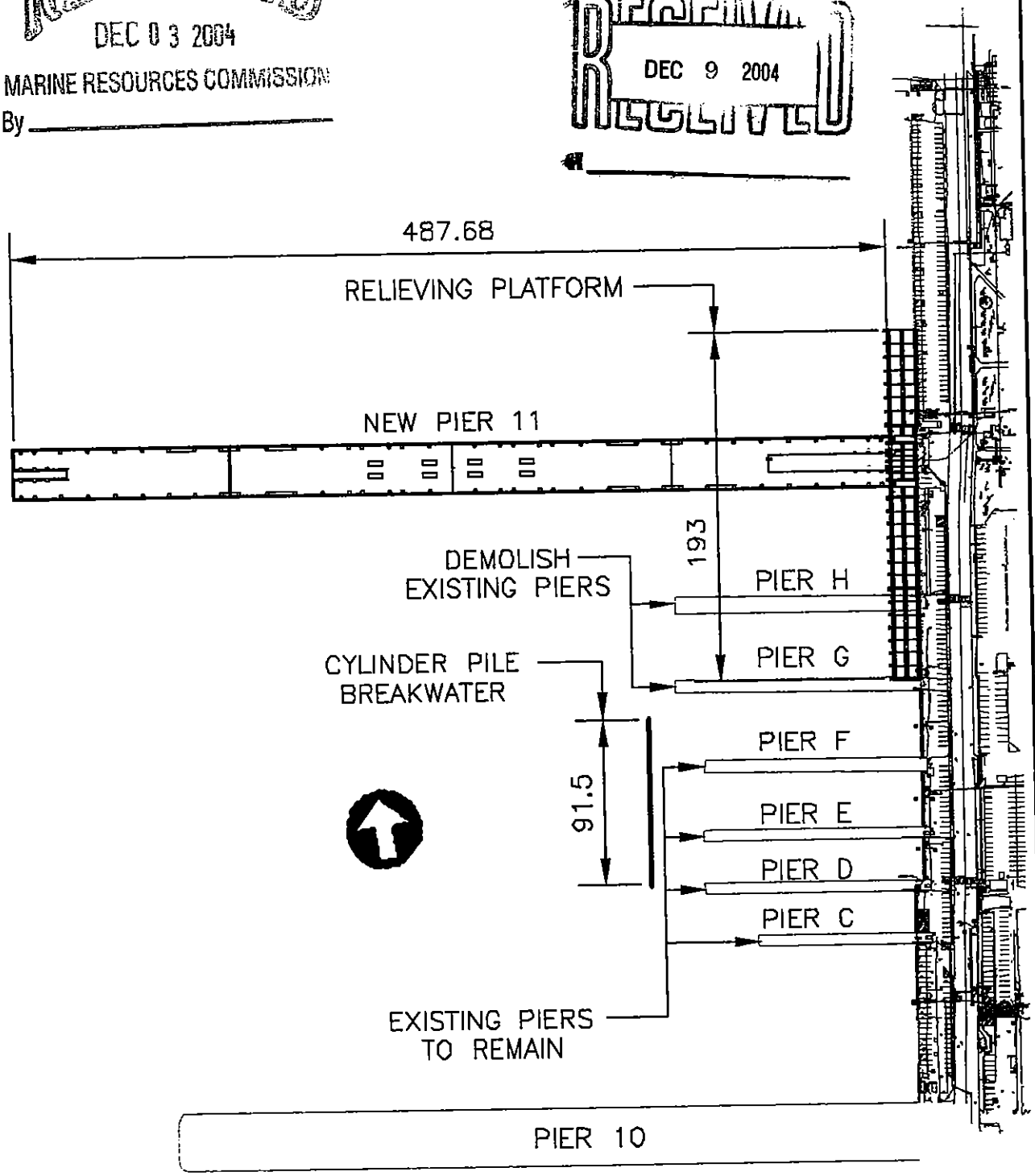

PROPOSE: PIER 11 REPLACEMENT DATUM: MEAN LOW WATER = 0.00 ADJACENT PROPERTY OWNER (1) U.S. NAVY	PIER 11 SITE PLAN (NOT TO SCALE)	PROPOSED PIER 11 REPLACEMENT IN: ELIZABETH RIVER AT: NORFOLK NAVAL BASE CITY: NORFOLK STATE: VIRGINIA APPLICATION BY: ATLANTIC DIVISION NAVAL FACILITY ENGR. COMM. SHEET 3 OF 7 DATE: 10-1-2004

RECEIVED
DEC 0 3 2004
MARINE RESOURCES COMMISSION
By

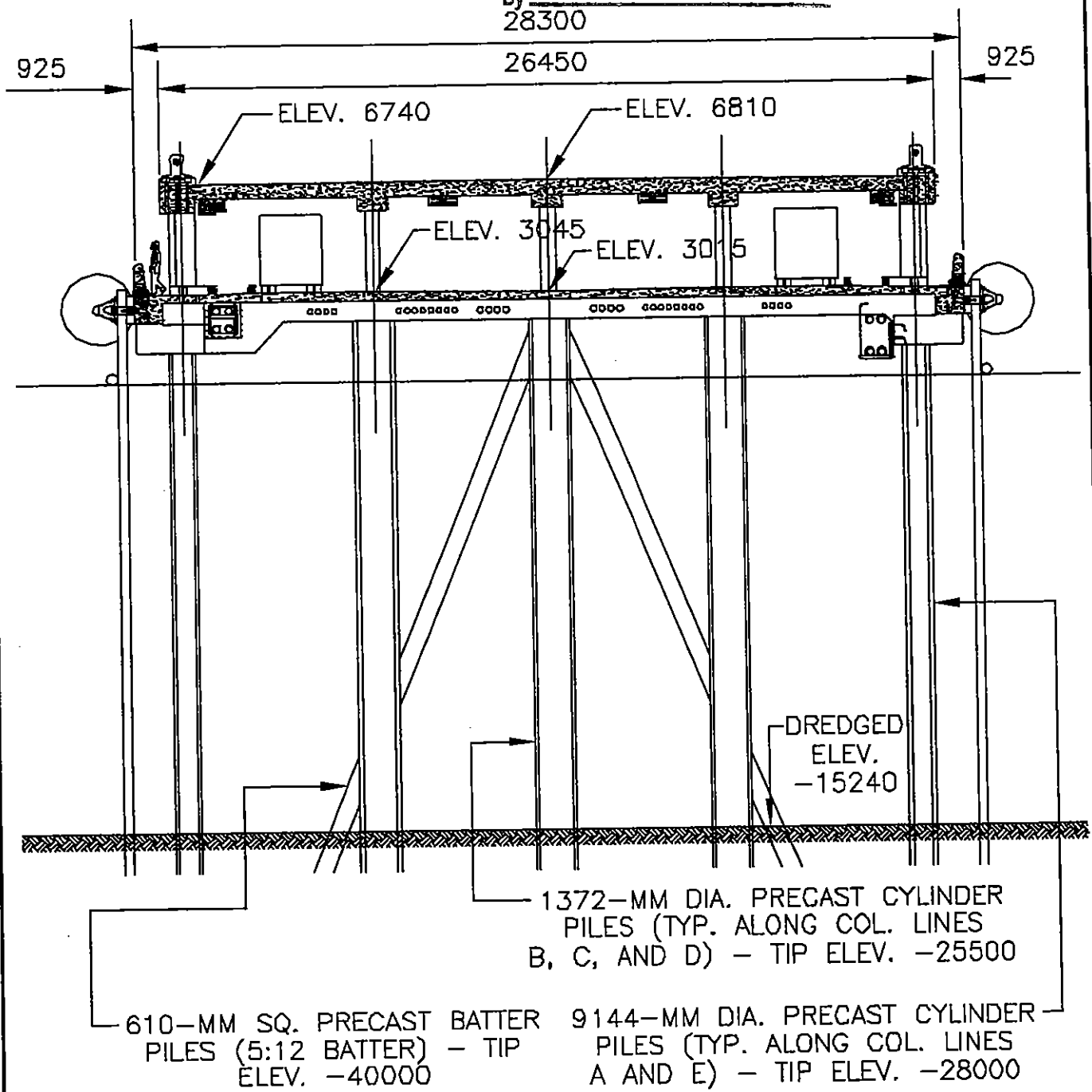

PROPOSE:
PIER 11 REPLACEMENT

DATUM: MEAN LOW WATER = 0.00

ADJACENT PROPERTY OWNER

(1) U.S. NAVY

TYP. PIER SECTION
SCALE: 1:500

U.S. ARMY CORPS OF ENGINEERS
RECEIVED
DEC 9 2004
BY

PROPOSED PIER 11 REPLACEMENT
IN: ELIZABETH RIVER
AT: NORFOLK NAVAL BASE
CITY: NORFOLK
STATE: VIRGINIA
APPLICATION BY: ATLANTIC DIVISION
NAVAL FACILITY ENGR. COMM.

SHEET 4 OF 7 DATE: 10-1-2004

RECEIVED
DEC 0 3 2004
MARINE RESOURCES COMMISSION
By _____

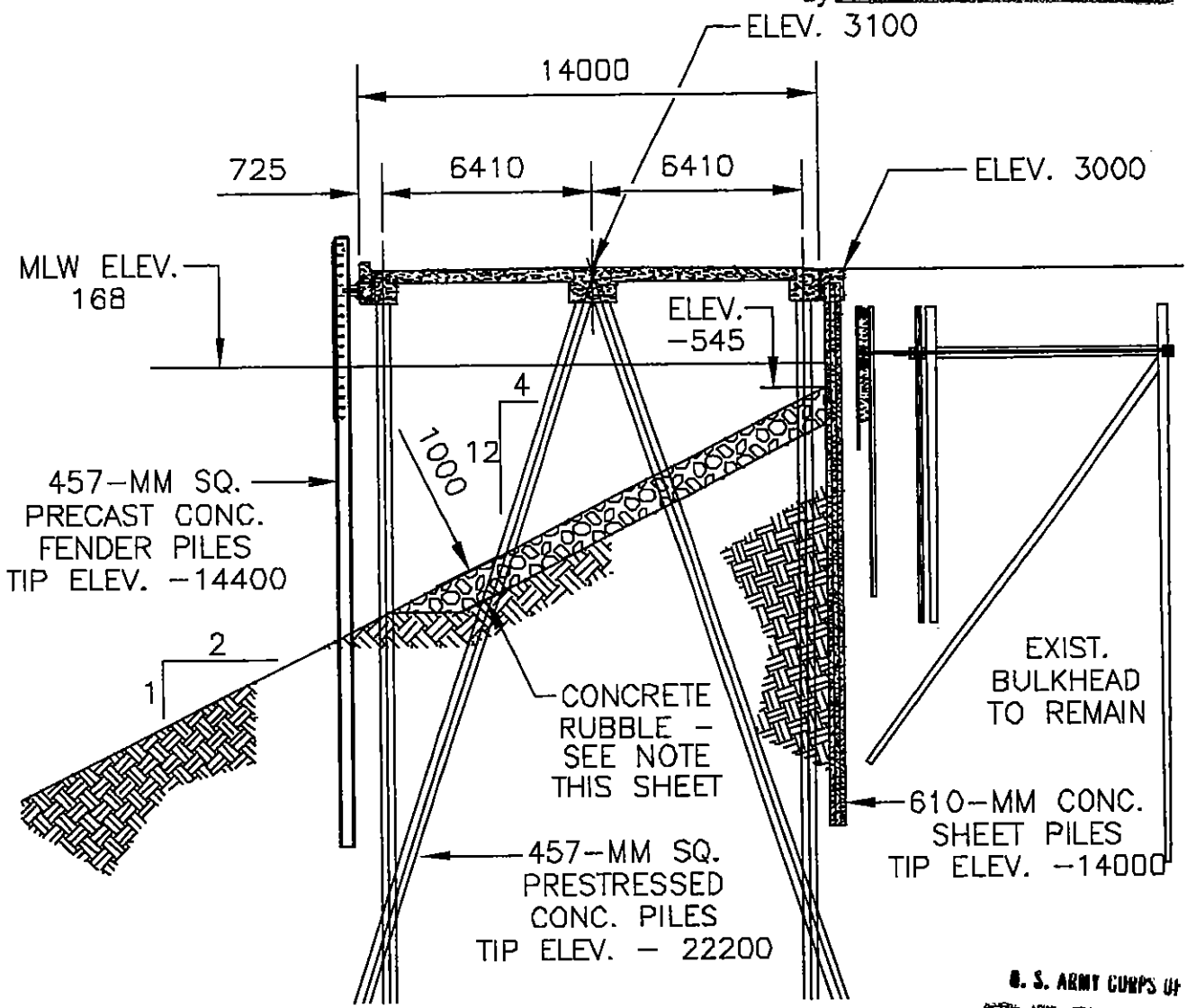

NOTE: CONCRETE RUBBLE IS AVAILABLE ON THE NAVAL STATION WITHIN 5 MILES OF THE PIER 11 CONSTRUCTION SITE. RUBBLE IS TO BE PLACED IN PIECES POSSESSING A MAXIMUM DIMENSION NOT MORE THAN 1000 mm, WITH EXPOSED REINFORCING BURNED OFF FLUSH WITH THE CONCRETE SURFACE (TYP).

U. S. ARMY CORPS OF ENGINEERS
RECEIVED
DEC 9 2004
BY _____

PROPOSE: PIER 11 REPLACEMENT DATUM: MEAN LOW WATER = 0.00 ADJACENT PROPERTY OWNER (1) U.S. NAVY	TYP. RELIEVING PLATFORM SECTION BENTS 205 - 231 SCALE: 1:5000	PROPOSED PIER 11 REPLACEMENT IN: ELIZABETH RIVER AT: NORFOLK NAVAL BASE CITY: NORFOLK STATE: VIRGINIA APPLICATION BY: ATLANTIC DIVISION NAVAL FACILITY ENGR. COMM. SHEET 5 OF 7 DATE: 10-1-2004

RECEIVED
DEC 0 3 2004
MARINE RESOURCES COMMISSION
By _____

U. S. ARMY CORPS OF ENGINEERS
RECEIVED
DEC 9 2004
BY _____

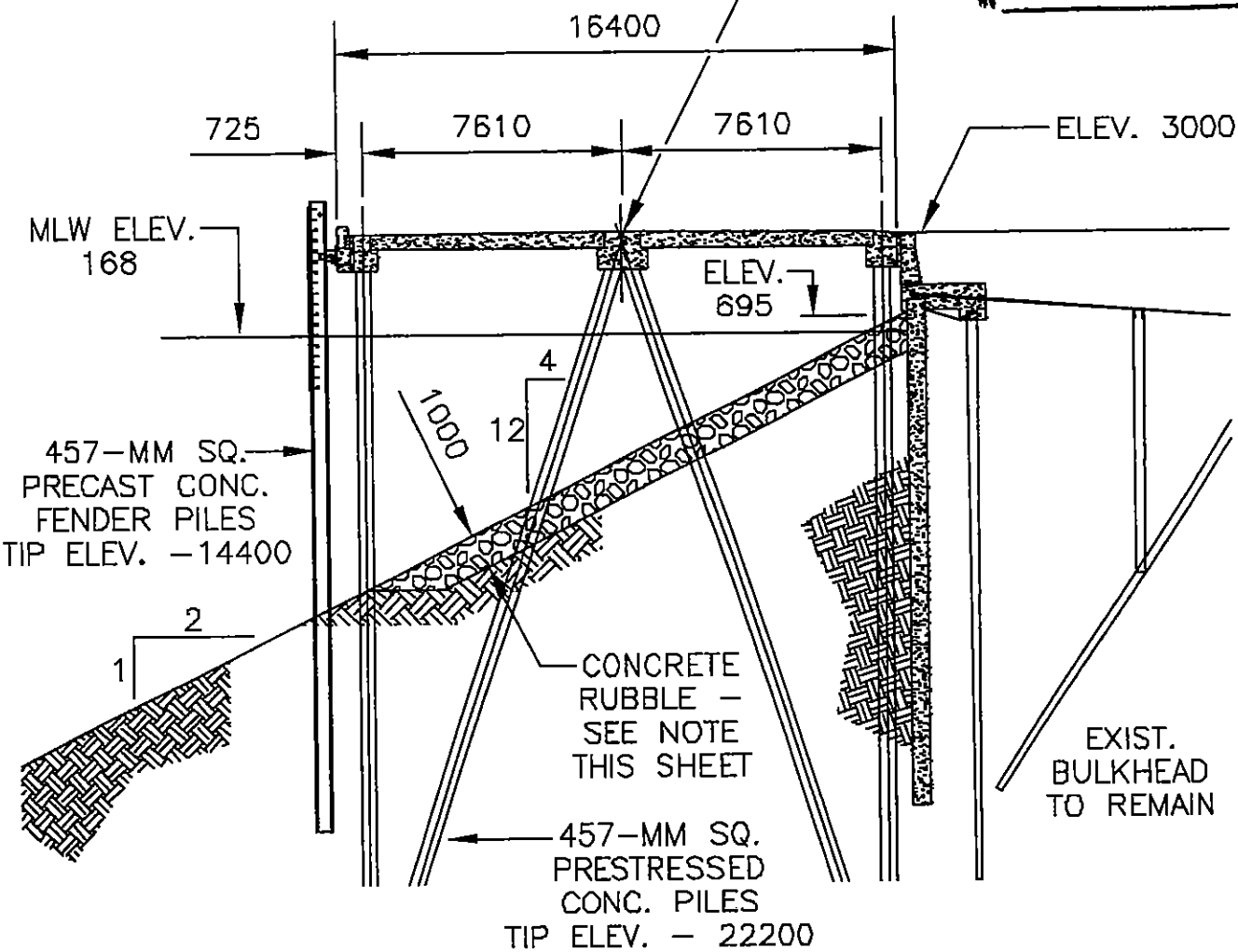

NOTE: CONCRETE RUBBLE IS AVAILABLE ON THE NAVAL STATION WITHIN 5 MILES OF THE PIER 11 CONSTRUCTION SITE. RUBBLE IS TO BE PLACED IN PIECES POSSESSING A MAXIMUM DIMENSION NOT MORE THAN 1000 mm, WITH EXPOSED REINFORCING BURNED OFF FLUSH WITH THE CONCRETE SURFACE (TYP).

PROPOSE: PIER 11 REPLACEMENT DATUM: MEAN LOW WATER = 0.00 ADJACENT PROPERTY OWNER (1) U.S. NAVY	TYP. RELIEVING PLATFORM SECTION BENTS 20532 - 239 SCALE: 1:5000	PROPOSED PIER 11 REPLACEMENT IN: ELIZABETH RIVER AT: NORFOLK NAVAL BASE CITY: NORFOLK STATE: VIRGINIA APPLICATION BY: ATLANTIC DIVISION NAVAL FACILITY ENGR. COMM. SHEET 6 OF 7 DATE: 10-1-2004

RECEIVED
DEC 9 3 2004
MARINE RESOURCES COMMISSION
By _____

U. S. ARMY CORPS OF ENGINEERS
RECEIVED
DEC 9 2004
RECEIVED

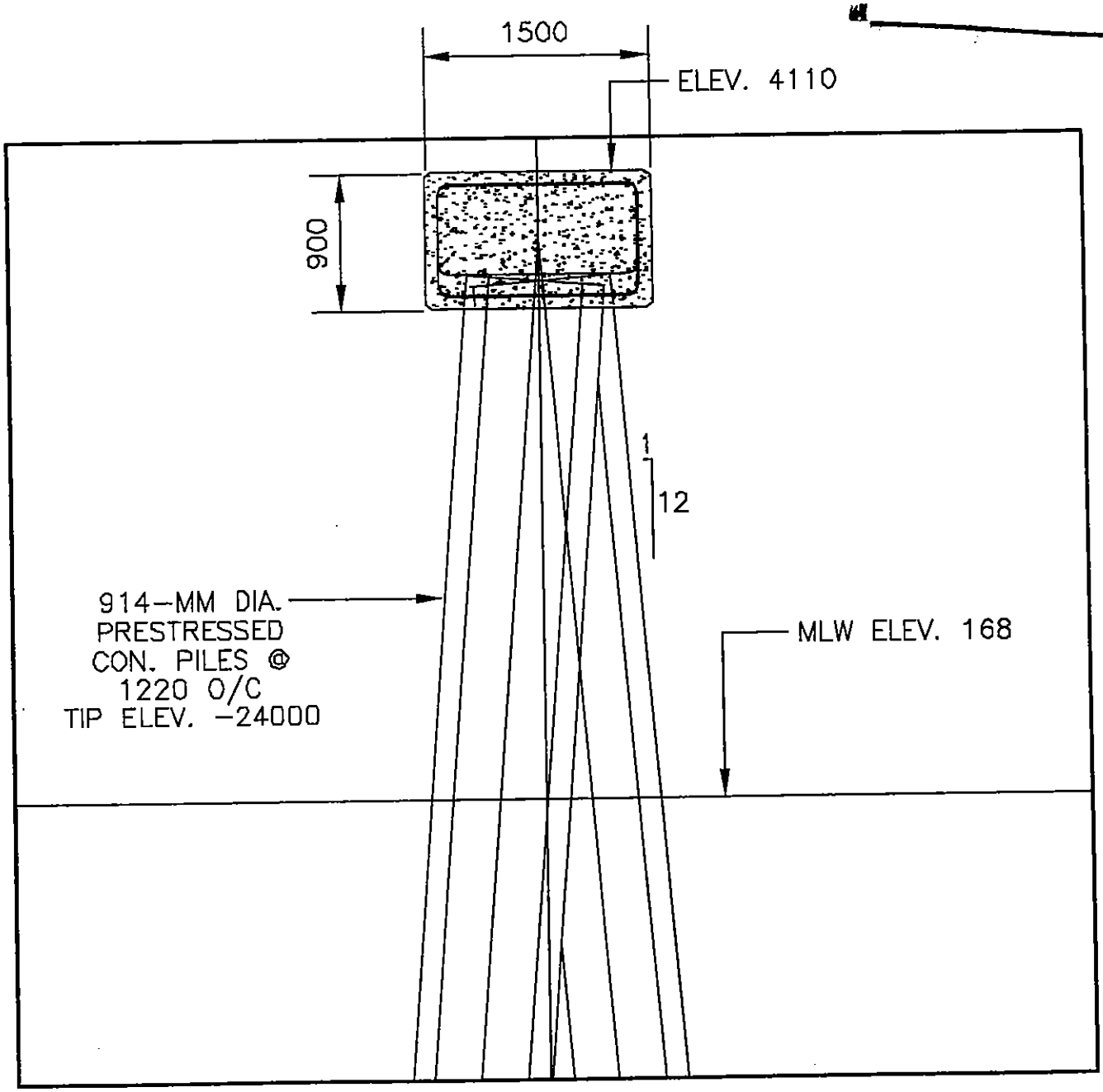

PROPOSE:
PIER 11 REPLACEMENT

DATUM: MEAN LOW WATER = 0.00

ADJACENT PROPERTY OWNER

(1) U.S. NAVY

TYP. BREAKWATER SECTION

SCALE: 1:1000

PROPOSED PIER 11 REPLACEMENT
IN: ELIZABETH RIVER
AT: NORFOLK NAVAL BASE
CITY: NORFOLK
STATE: VIRGINIA
APPLICATION BY: ATLANTIC DIVISION
NAVAL FACILITY ENGR. COMM.

SHEET 7 OF 7 DATE: 10-1-2004