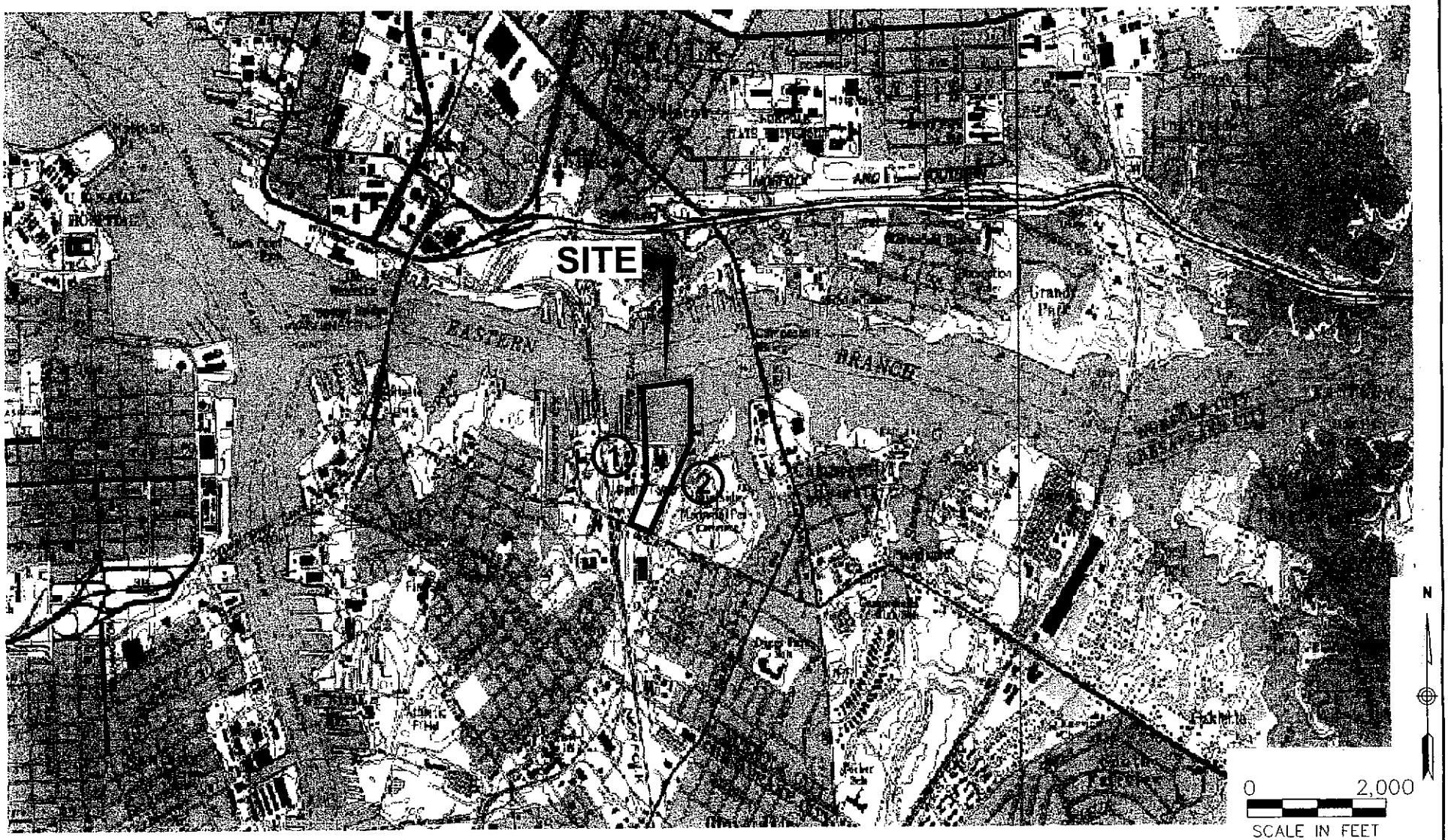

VHB

Vanasse Hangen Brustlin, Inc.
Transportation
Land Development
Environmental Services
351 McLaws Circle, Suite 3
Williamsburg, Virginia 23185
(757) 220-0500 · Fax: (757) 220-8544

ADJACENT PROPERTY OWNERS:

1. ALLIED MARINE INDUSTRIES
2. W3 MARINE

DATUM: MEAN LOW WATER

SOUTH NORFOLK AGGREGATE & MARINE YARD

LOCATION MAP

AT: EASTERN BRANCH ELIZABETH RIVER

IN: NORFOLK, VIRGINIA

PURPOSE: COMMERCIAL MARINE YARD

APPLICATION BY: PICKLE PROPERTY, LLC

DATE: JUNE, 2008

SHEET 1 **OF** 6

P:\32886.00\cad\ev\planset\JPA\32886-JPA-LM.dwg

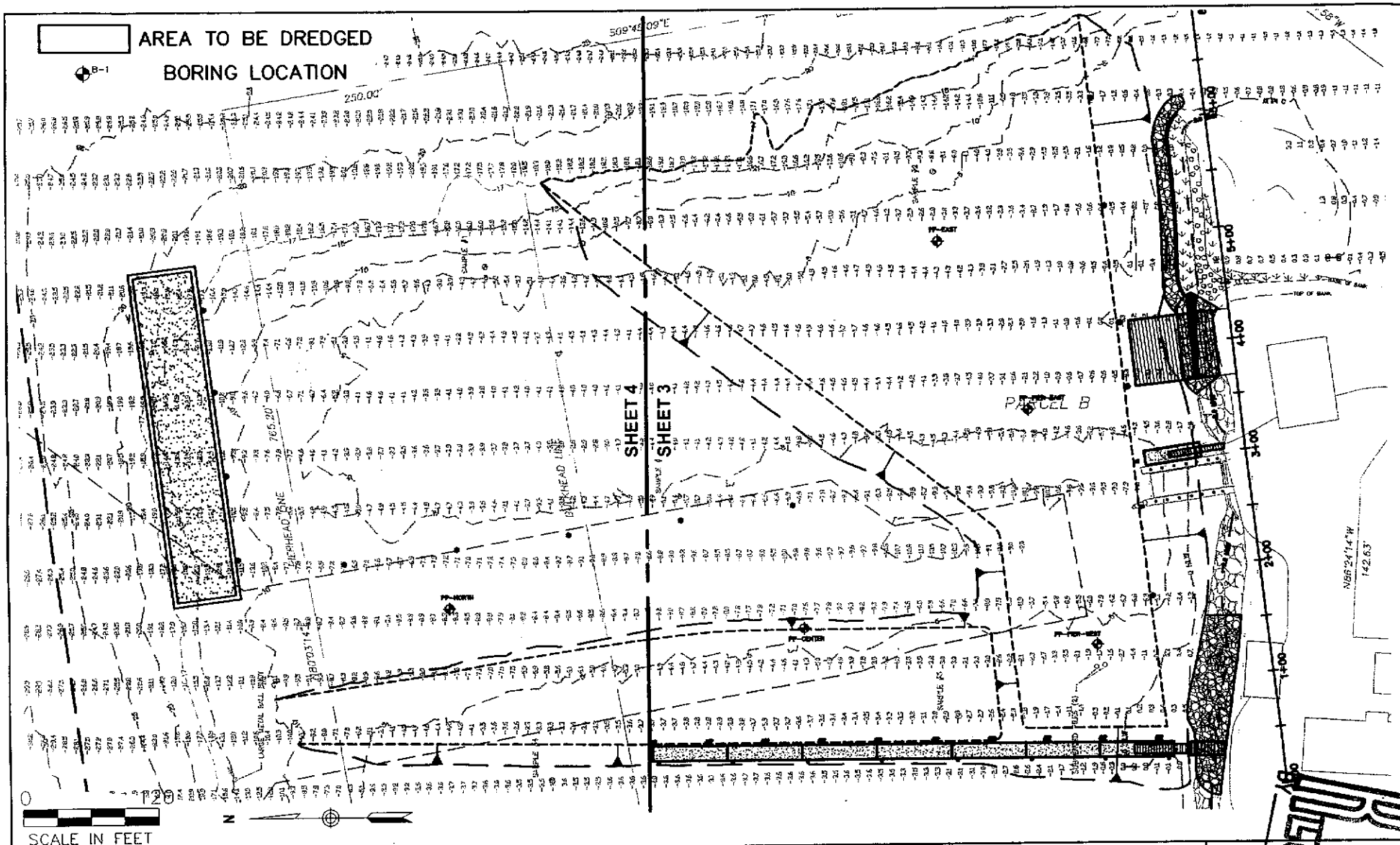

VHB

Vanasse Hangen Brustlin, Inc.
Transportation
Land Development
Environmental Services
351 McLaws Circle, Suite 3
Williamsburg, Virginia 23185
(757) 220-0500 • Fax: (757) 220-8544

ADJACENT PROPERTY OWNERS:
1. ALLIED MARINE INDUSTRIES
2. W3 MARINE

DATUM: MEAN LOW WATER

SOUTH NORFOLK AGGREGATE & MARINE YARD

OVERALL PLAN

AT: EASTERN BRANCH ELIZABETH RIVER

IN: NORFOLK, VIRGINIA

PURPOSE: COMMERCIAL MARINE YARD

APPLICATION BY: PICKLE PROPERTY, LLC

DATE: JUNE, 2008

SHEET 2 OF 6

P:\32886.00\cad\ev\planset\JPA\32886-JPA-LM.dwg

U.S. ARMY CORPS OF ENGINEERS
RECEIVED
JUN 0 2008
BY

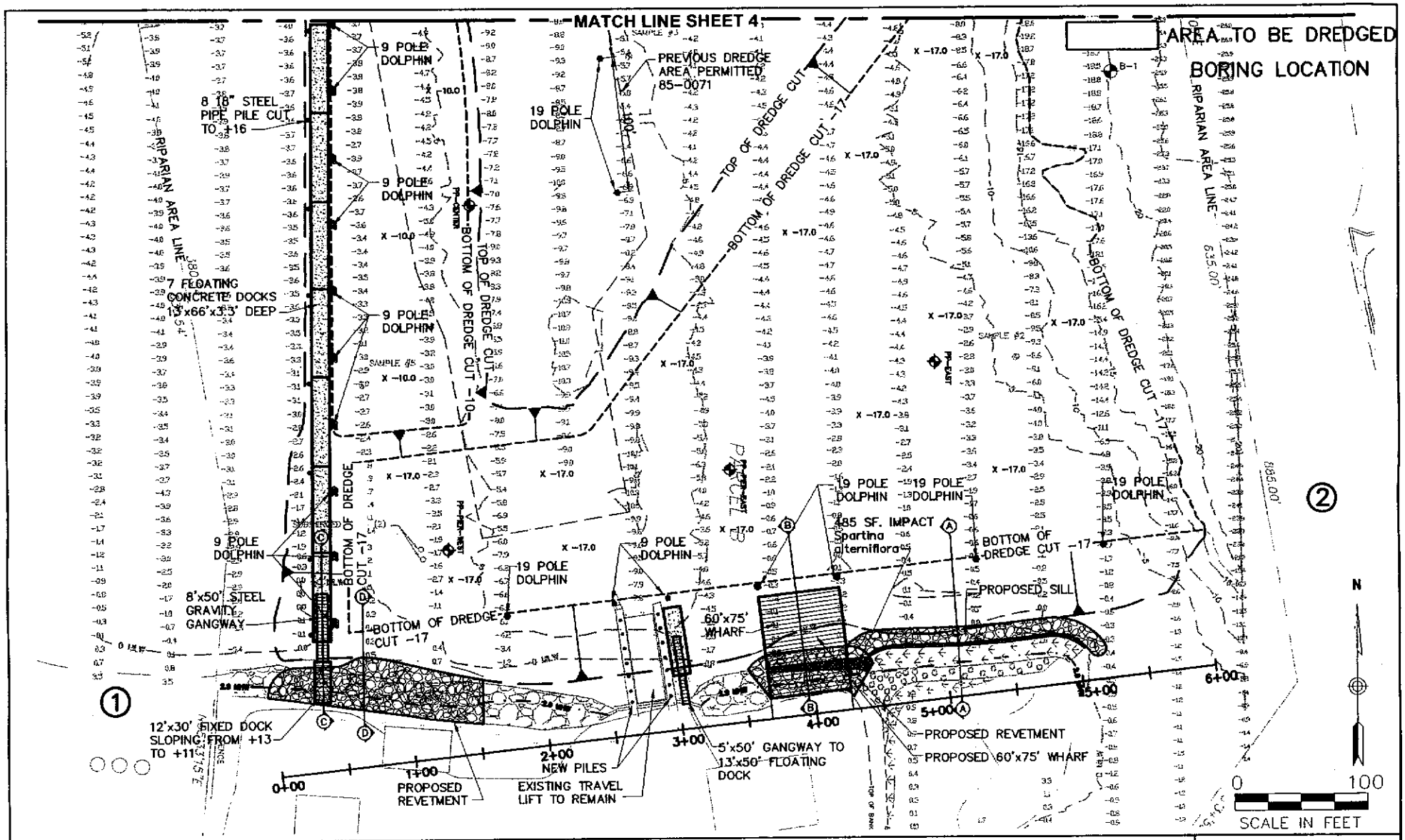

VHB
Vanasse Hangen Brustlin, Inc.
Transportation
Land Development
Environmental Services
351 McLaws Circle, Suite 3
Williamsburg, Virginia 23185
(757) 220-0500 • Fax (757) 220-8544

ADJACENT PROPERTY OWNERS:
1. ALLIED MARINE INDUSTRIES
2. W3 MARINE

DATUM: MEAN LOW WATER

SOUTH NORFOLK AGGREGATE & MARINE YARD

PROPOSED IMPROVEMENTS

AT: EASTERN BRANCH ELIZABETH RIVER

IN: NORFOLK, VIRGINIA

PURPOSE: COMMERCIAL MARINE YARD

APPLICATION BY: PICKLE PROPERTY, LLC

DATE: JUNE, 2008

SHEET 3 **OF** 6

P:\32886.00\cad\ev\planset\JPA\32886-JPA-LM.dwg

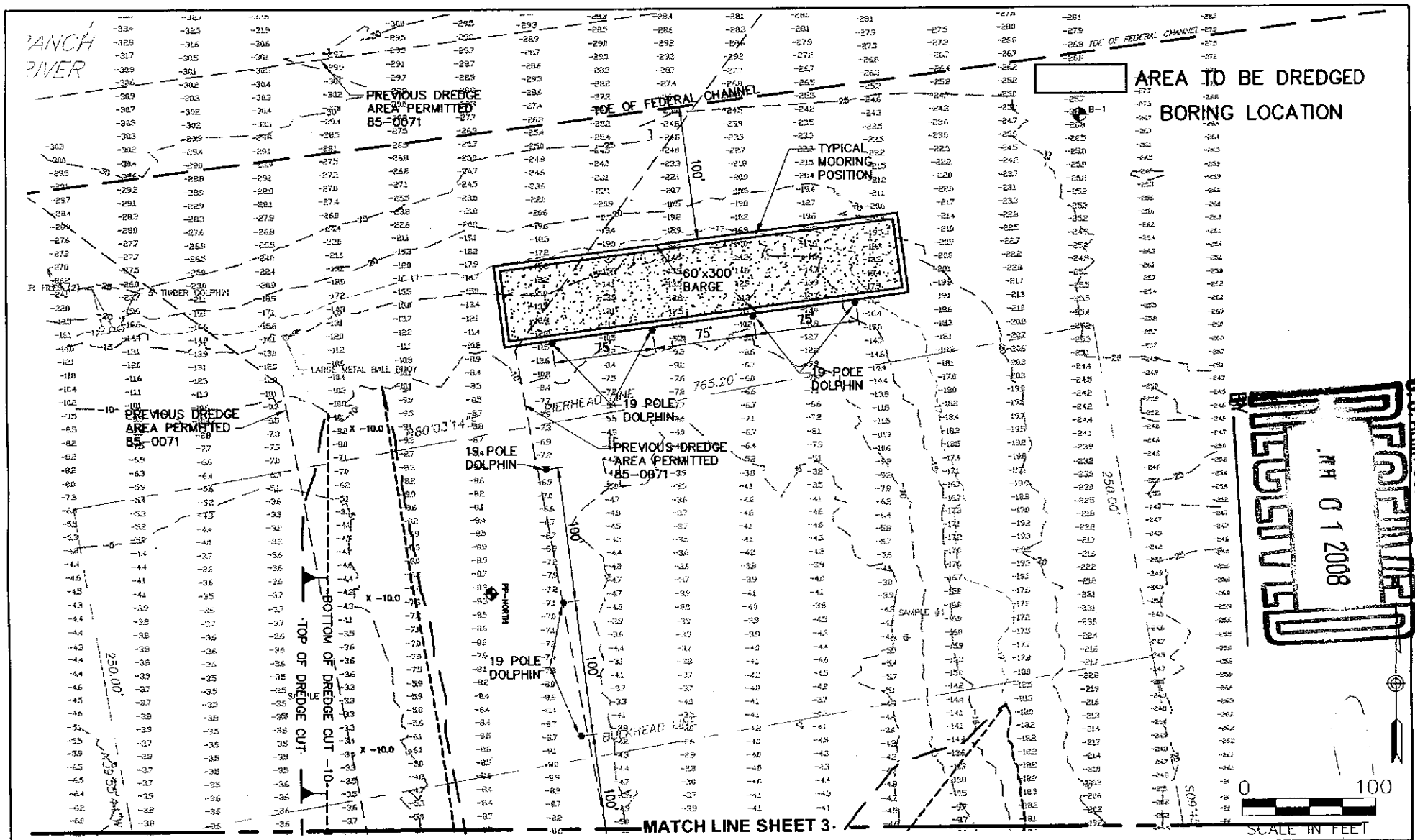

VHB

Vanasse Hangen Brustlin, Inc.
Transportation
Land Development
Environmental Services
351 McLaws Circle, Suite 3
Williamsburg, Virginia 23185
(757) 220-0500 • Fax: (757) 220-8544

ADJACENT PROPERTY OWNERS:
1. ALLIED MARINE INDUSTRIES
2. W3 MARINE

DATUM: MEAN LOW WATER

SOUTH NORFOLK AGGREGATE & MARINE YARD

PLAN SHEET

AT: EASTERN BRANCH ELIZABETH RIVER

IN: NORFOLK, VIRGINIA

PURPOSE: COMMERCIAL MARINE YARD

APPLICATION BY: PICKLE PROPERTY, LLC

DATE: JUNE, 2008

SHEET 4 **OF** 6

P:\32886.00\cad\ev\planset\JPA\32886-JPA-LM.dwg

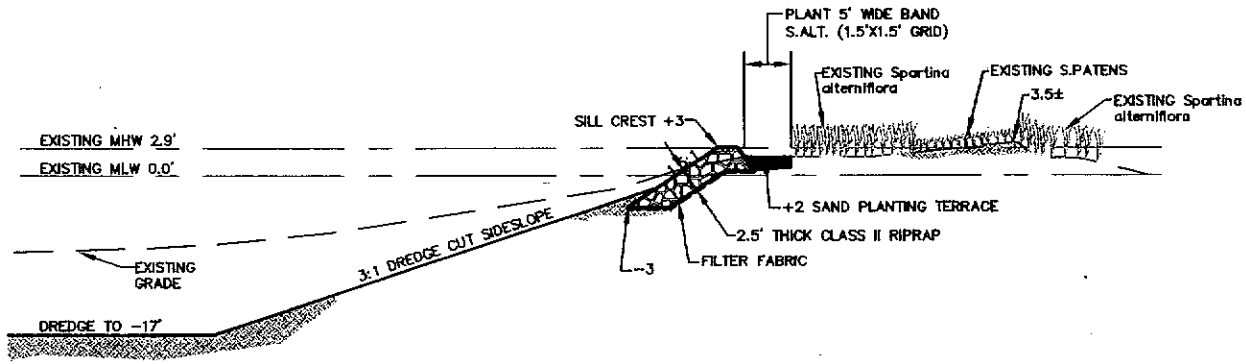

SECTION A-A SILL & DREDGING

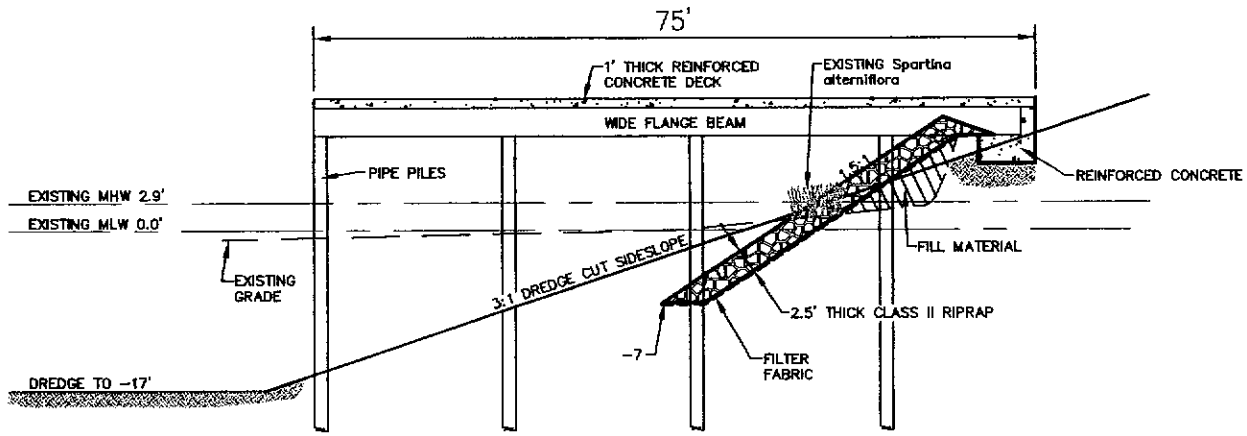

SECTION B-B WORK PLATFORM, RIPRAP REVETMENT & DREDGING

0 20
SCALE IN FEET

VHB
Vanasse Hangen Brustlin, Inc.
Transportation
Land Development
Environmental Services
351 McLaws Circle, Suite 3
Williamsburg, Virginia 23185
(757) 220-0500 • Fax: (757) 220-8544

ADJACENT PROPERTY OWNERS:
1. ALLIED MARINE INDUSTRIES
2. W3 MARINE

DATUM: MEAN LOW WATER

SOUTH NORFOLK AGGREGATE & MARINE YARD

SECTION A-A & B-B

AT: EASTERN BRANCH ELIZABETH RIVER

IN: NORFOLK, VIRGINIA

PURPOSE: COMMERCIAL MARINE YARD

APPLICATION BY: PICKLE PROPERTY, LLC

DATE: JUNE, 2008

SHEET 5 **OF** 6

P:\32886.00\cad\ev\planset\JPA\32886-JPA-LM.dwg

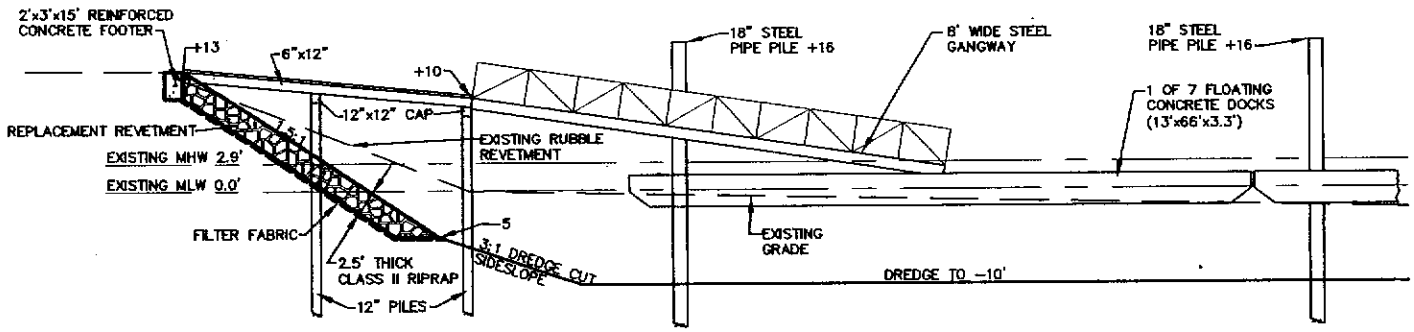

SECTION C-C FLOATING DOCKS & DREDGING

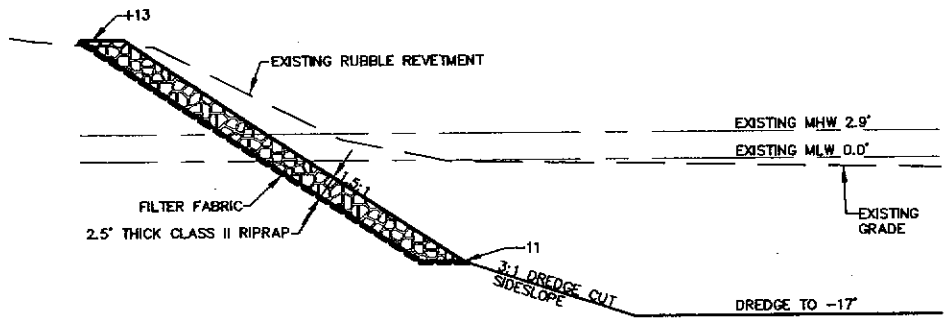

SECTION D-D RIPRAP REVETMENT & DREDGING

0 20
SCALE IN FEET

VHB
Vanasse Hangen Brustlin, Inc.
Transportation
Land Development
Environmental Services
351 McLaws Circle, Suite 3
Williamsburg, Virginia 23185
(757) 220-0500 · Fax: (757) 220-8544

ADJACENT PROPERTY OWNERS:
1. ALLIED MARINE INDUSTRIES
2. W3 MARINE

DATUM: MEAN LOW WATER

SOUTH NORFOLK AGGREGATE & MARINE YARD

SECTION C-C & D-D

AT: EASTERN BRANCH ELIZABETH RIVER

IN: NORFOLK, VIRGINIA

PURPOSE: COMMERCIAL MARINE YARD

APPLICATION BY: PICKLE PROPERTY, LLC

DATE: JUNE, 2008

SHEET 6 **OF** 6

P:\32886.00\cod\ev\planset\JPA\32886-JPA-LM.dwg