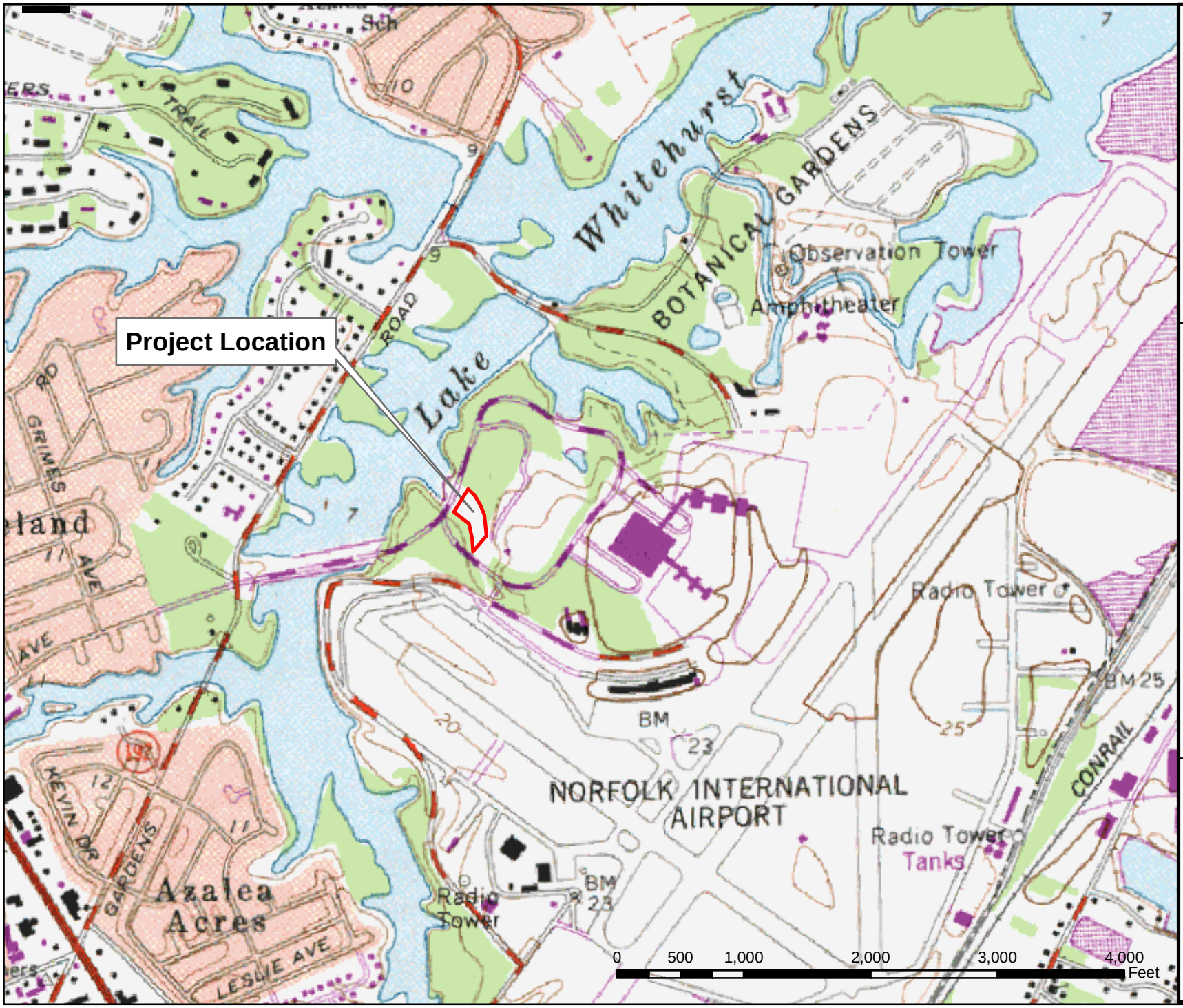

VICINITY MAP
Sheet 1 of 5

Norfolk International Airport
Proposed Garage D
Norfolk, Virginia

Source: Aerials Express 2005

Kimley-Horn and Associates, Inc.

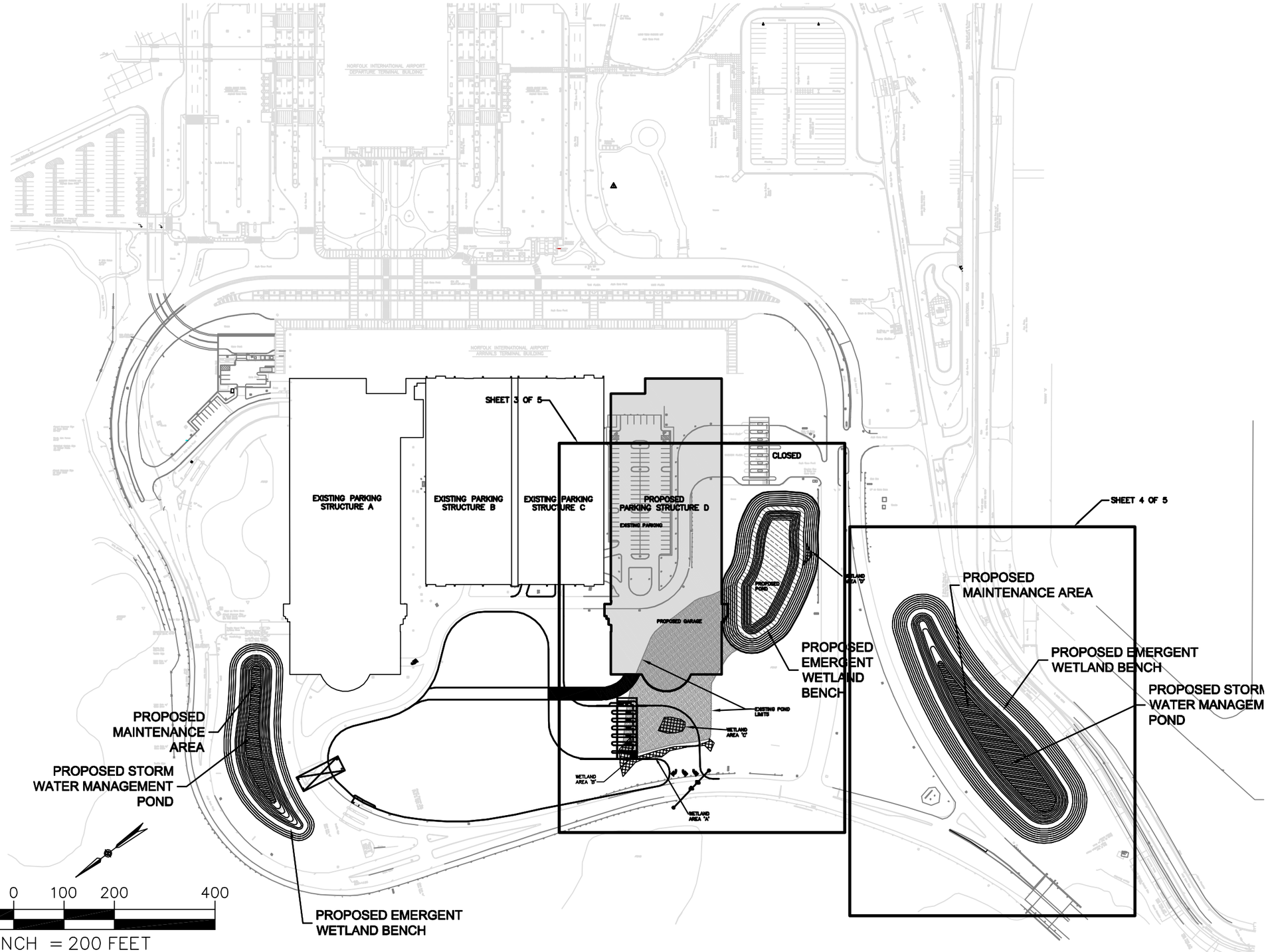

This document, together with the concepts and designs presented herein, as an instrument of service, is intended only for the specific purpose and client for which it was prepared. Reuse of and improper reliance on this document without written authorization and adaptation by Kimley-Horn and Associates, Inc. shall be without liability to Kimley-Horn and Associates, Inc.

Drawing name: G:\Project Files\Norfolk International Airport\Drainage\2 OF 4.dwg Opt1-Phs1 May 08, 2008 2:02pm by: mike.hart

Kimley-Horn and Associates, Inc.
Suite 300
501 Independence Parkway
Chesapeake, Virginia 23320
Tel: (757) 548-7300
Fax: (757) 548-7301

Norfolk International Airport
VIRGINIA

GENERAL PLAN FOR PARKING IMPROVMENTS

PROPOSED GARAGE D

No.	REVISIONS	DATE	BY

SCALE (H): 1"=200'
SCALE (V): 1"=200'
DESIGNED BY:
DRAWN BY:
QC BY:_____ DATE:_____
DATE: 5/08/2008
KHA PROJECT NO.: 116136002
SHEET NUMBER
2 OF 5

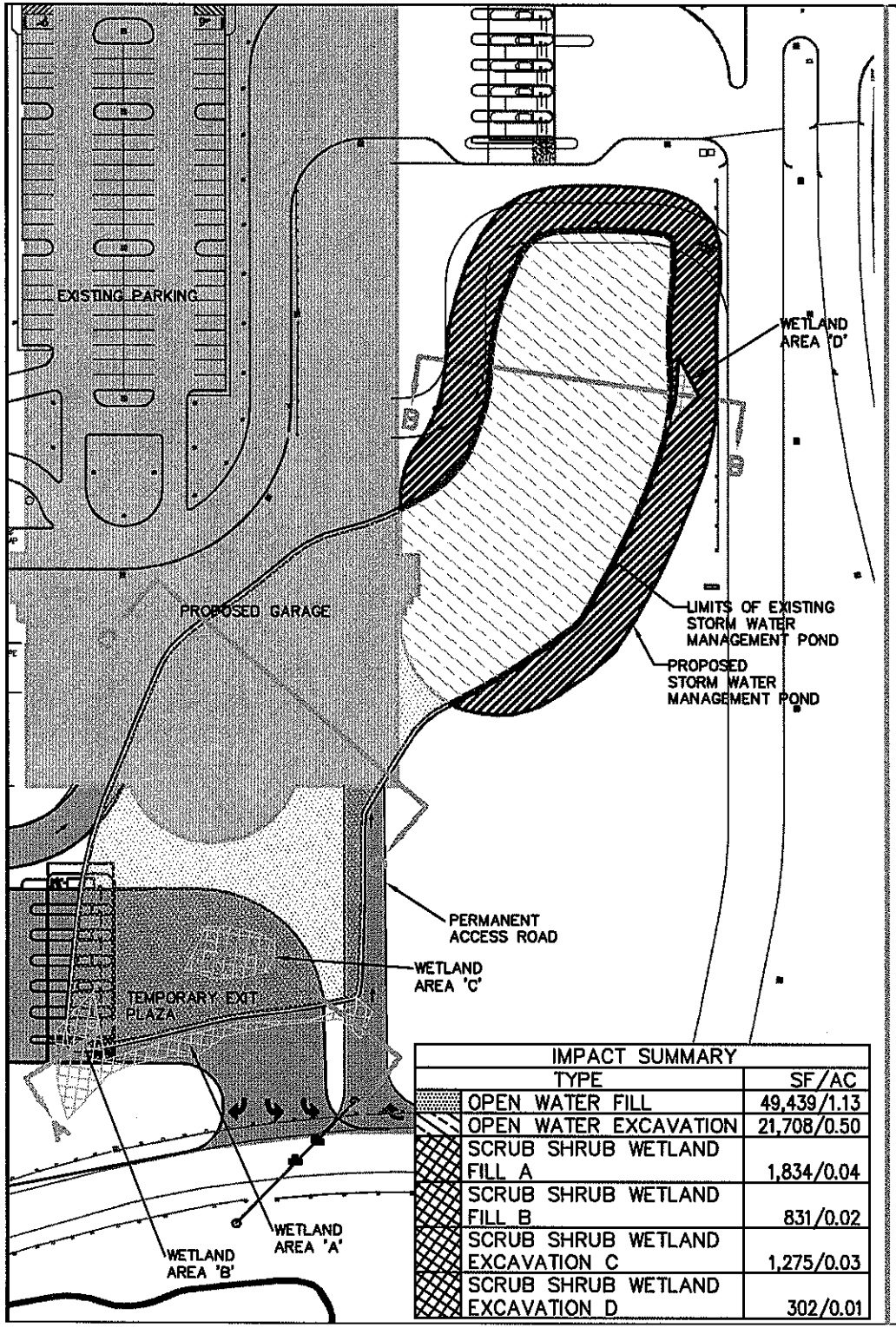

IMPACT SUMMARY	
TYPE	SF/AC
OPEN WATER FILL	49,439/1.13
OPEN WATER EXCAVATION	21,708/0.50
SCRUB SHRUB WETLAND FILL A	1,834/0.04
SCRUB SHRUB WETLAND FILL B	831/0.02
SCRUB SHRUB WETLAND EXCAVATION C	1,275/0.03
SCRUB SHRUB WETLAND EXCAVATION D	302/0.01

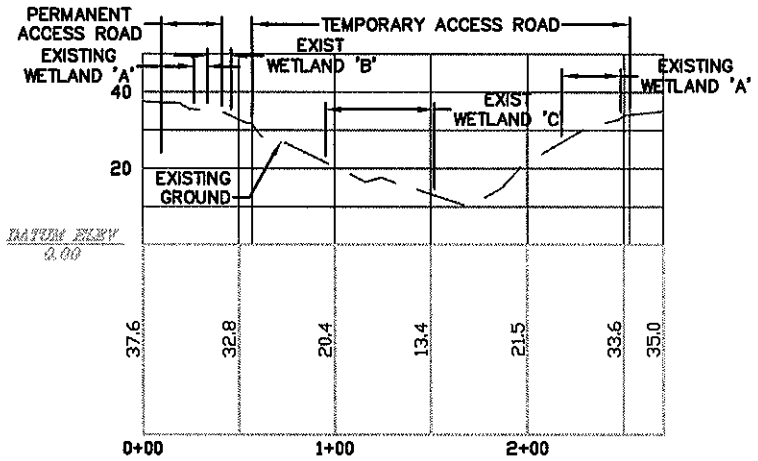

SECTION A–A

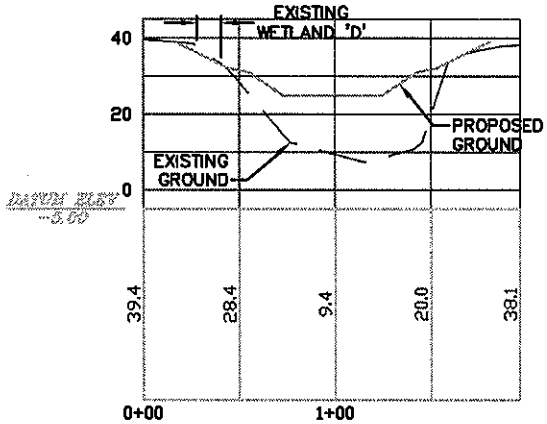

SECTION B–B

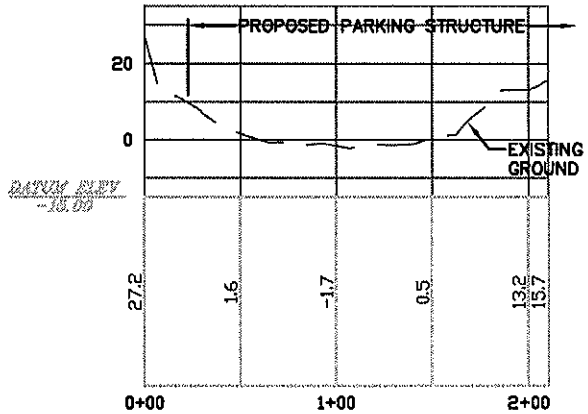

SECTION C–C

SCALE (H):	1" = 100'
SCALE (V):	1" = 50'
DESIGNED BY:	JS
DRAWN BY:	MTH
DATE:	05/15/2008
KHA PROJECT NO.:	

Kimley-Horn and Associates, Inc.
Suite 300
501 Independence Parkway
Chesapeake, Virginia 23320
Tel: (757) 548-7300
Fax: (757) 548-7301
©2008 Kimley-Horn and Associates, Inc.

NORFOLK INTERNATIONAL AIRPORT

NORFOLK VIRGINIA

WETLAND IMPACTS PLAN VIEW AND CROSS SECTIONS

DRAWING 3 OF 5

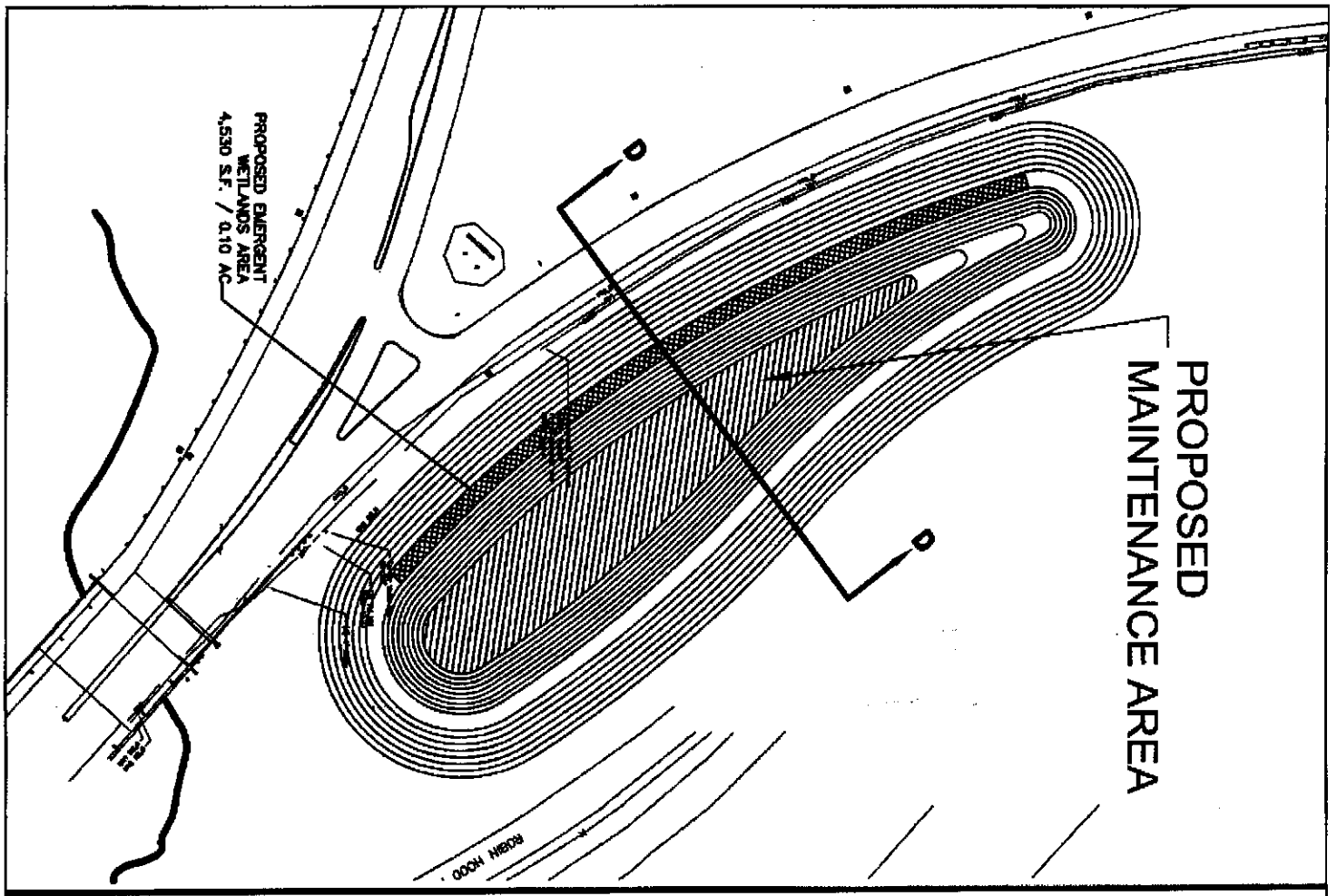

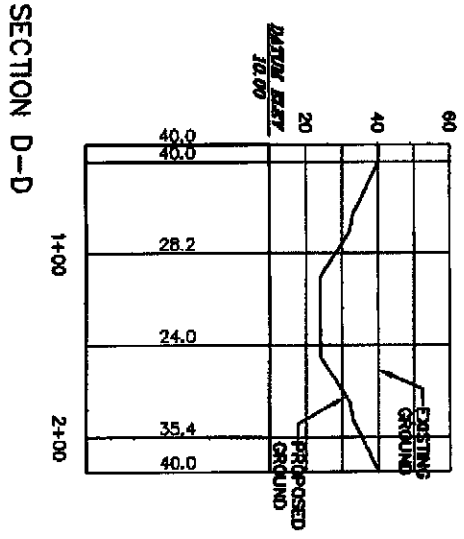

SCALE (H):	1" = 100'
SCALE (V):	1" = 60'
DESIGNED BY:	JB
DRAWN BY:	MTH
DATE:	02/20/2008
KHA PROJECT NO.:	

PROPOSED STORM WATER MANAGEMENT POND

DRAWING 4 OF 5

NORFOLK INTERNATIOANAL AIRPORT

NORFOLK VIRGINIA

Kimley-Horn and Associates, Inc.
Suite 300
501 Independence Parkway
Chesapeake, Virginia 23320
Tel: (757) 548-7300
Fax: (757) 548-7301

©2008 Kimley-Horn and Associates, Inc.

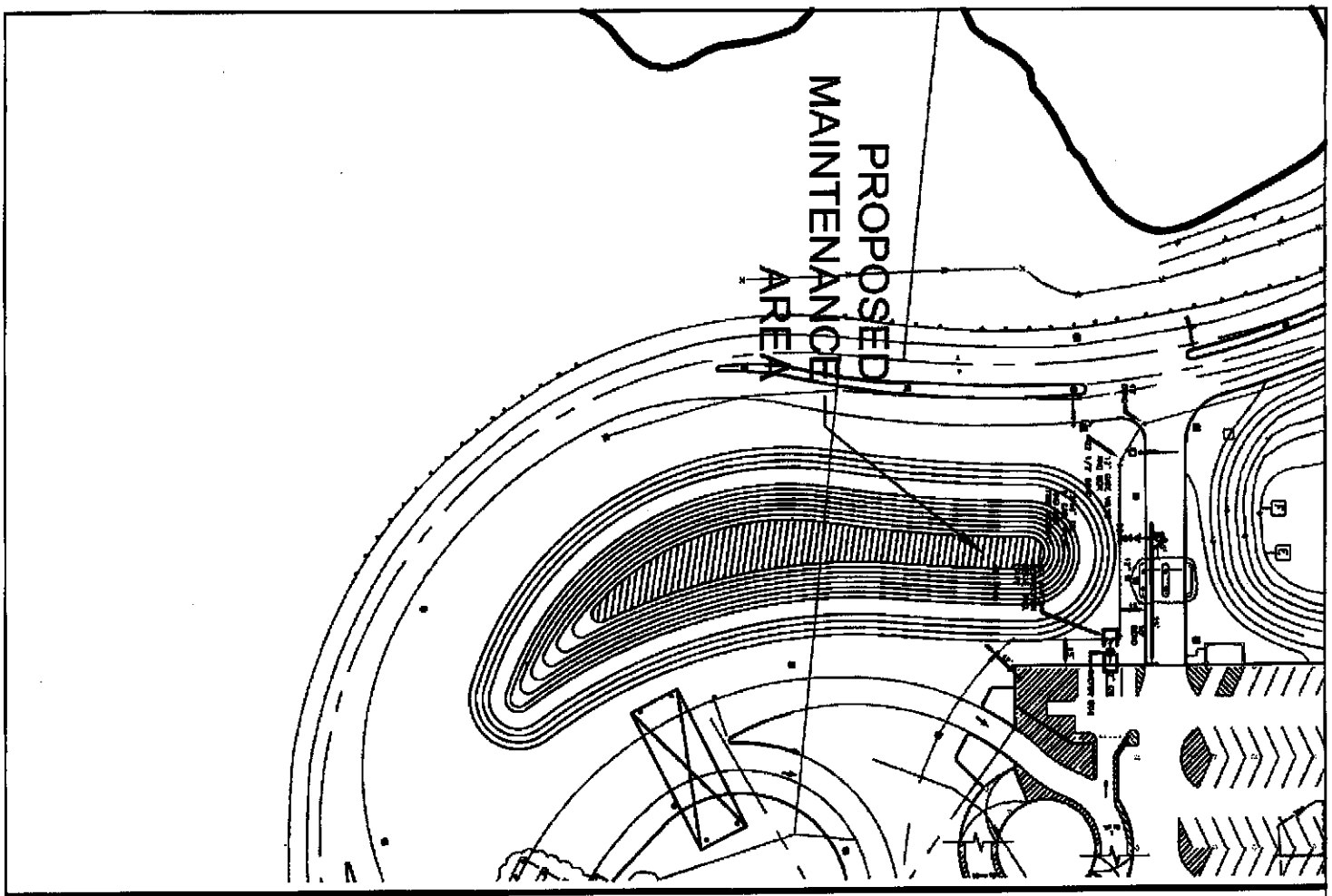

SCALE (H):	1" = 100'
SCALE (V):	1" = 50'
DESIGNED BY:	JS
DRAWN BY:	MTN
DATE:	02/20/2008
KHA PROJECT NO.:	

PROPOSED STORM WATER MANAGEMENT POND

DRAWING 5 OF 5

NORFOLK INTERNATIOANAL AIRPORT

NORFOLK VIRGINIA

Kimley-Horn and Associates, Inc.

Suite 300
501 Independence Parkway
Chesapeake, Virginia 23320

Tel: (757) 548-7300
Fax: (757) 548-7301

©2008 Kimley-Horn and Associates, Inc.