SITE NO

DA104D

KBR
Engineered by KBR Technical Services Inc

GLENN DAVID RAUCHLE
VA REG 037388
FOR REVIEW ONLY
NOT FOR BIDDING
PERMITS OR
CONSTRUCTION
NOV 26, 2003

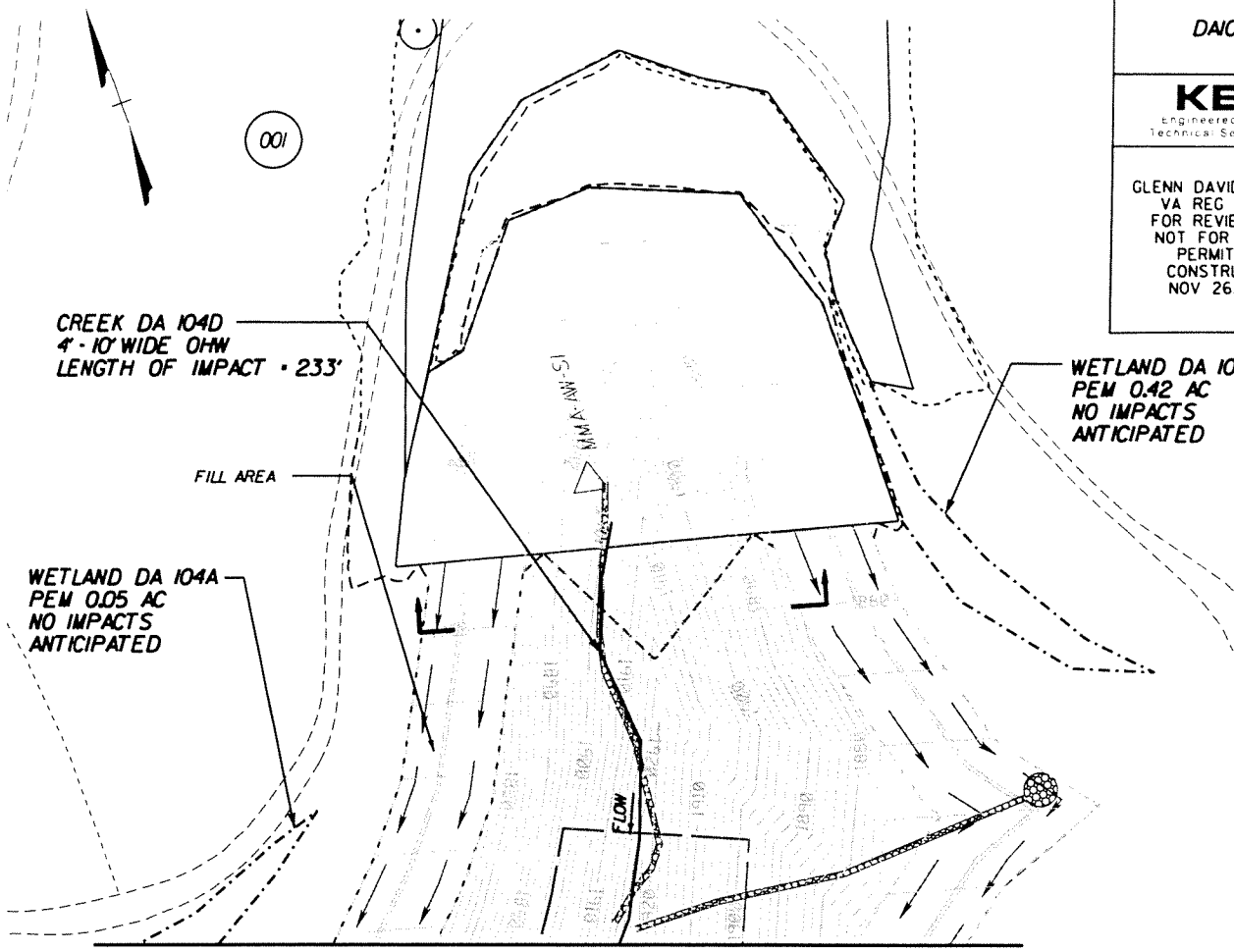

FOR CONTINUATION SEE DRAWING SK102004A

PLAN

SCALE
0 50' 100'

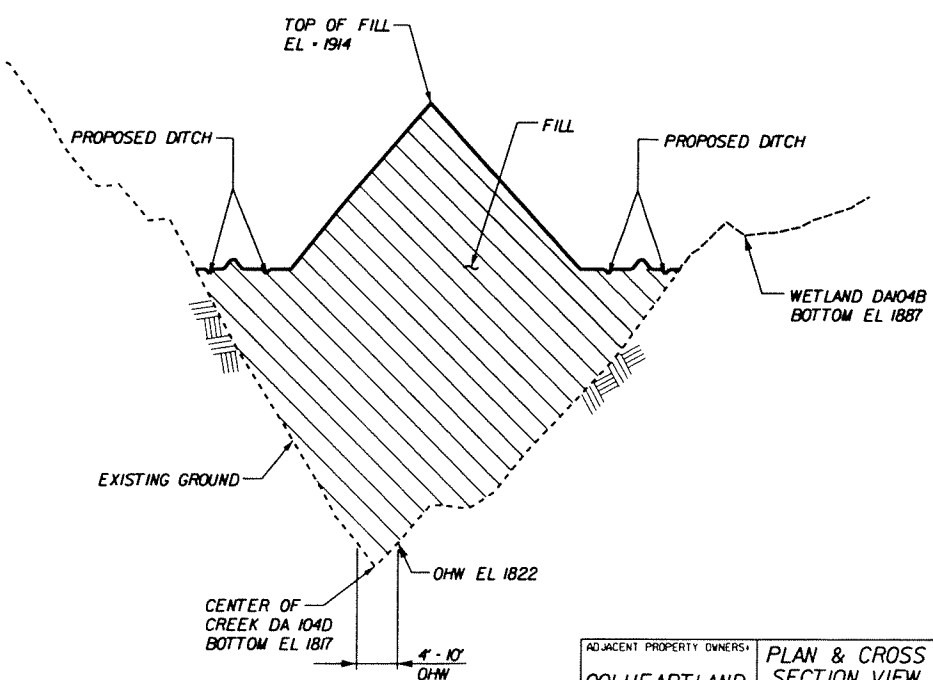

CROSS SECTION

HORIZONTAL SCALE
0 50' 100'

VERTICAL SCALE
0 20' 40'

ADJACENT PROPERTY OWNERS:	PLAN & CROSS SECTION VIEW RAMP B FILL SITE 99	PROPOSED ROAD CROSSING PROJECT
001 HEARTLAND FOREST LAND FUND		CREEK DA 104D COUNTY: BUCHANAN APPLICANT: SHEET OF DATE:

PLAN NO.	PROJECT	FILE NO.	SHEET NO.
	0121-013-101	SK102004	

6-08-2004 10:18:36

bbrh07

Ref_File - f:\CMO166\Zlpfiles\06-02-047T&L EIS Permits\d647126dr100.dgn Ref_File - f:\CMO166\Zlpfiles\06-02-047T&L EIS Permits\d647126d00.dgn Ref_File - f:\CMO166\Zlpfiles\06-02-047T&L EIS Permits\cf_xborder.dgn Ref_File - f:\CMO166\Zlpfiles\05-12-04\utils_water_Maps\v_tech_0

FOR CONTINUATION SEE DRAWING SK102004

SITE NO
DA104D

KBR
Engineered by KBR Technical Services Inc

GLENN DAVID RAUCHLE
VA REG 037388
FOR REVIEW ONLY
NOT FOR BIDDING
PERMITS OR
CONSTRUCTION
NOV 26, 2003

WETLAND DA 104A
PEM 0.05 AC
NO IMPACTS
ANTICIPATED

CREEK DA 104D
4' - 10' WIDE OHW
LENGTH OF IMPACT = 234'

CREEK DA 104C/D
287'

FLOW

FILL AREA

001

CREEK DA 104C
10' - 20' WIDE OHW
LENGTH OF IMPACT = 40'

FOR CONTINUATION SEE DRAWING SK102004B

SCALE
0 50' 100'

PLAN

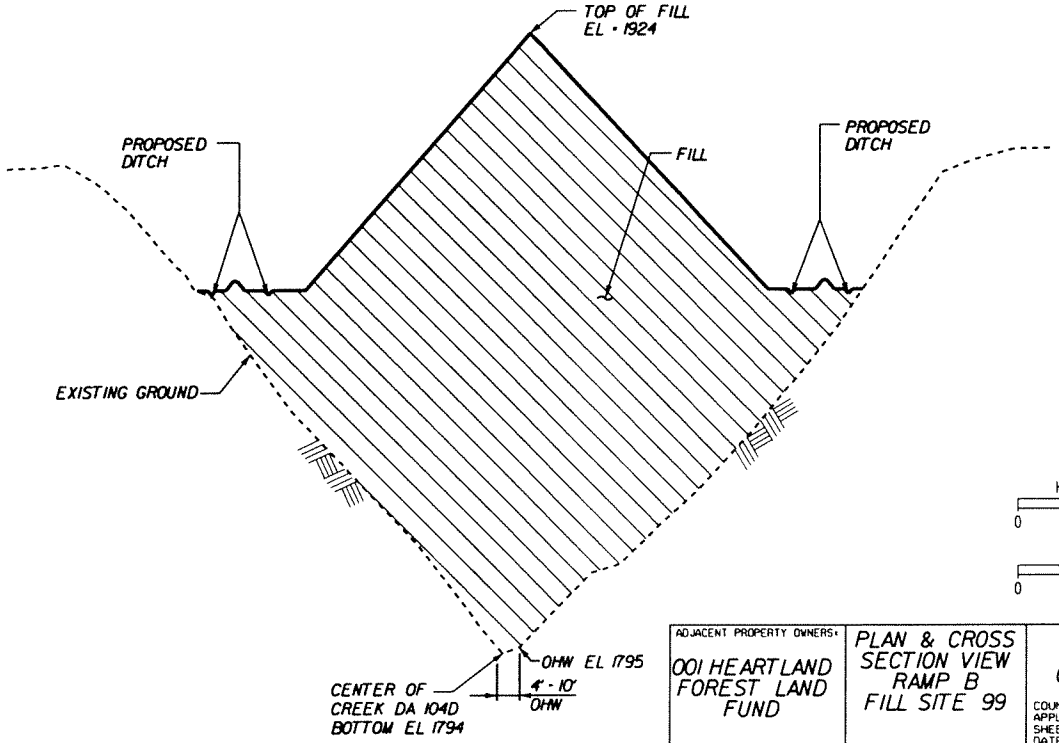

HORIZONTAL SCALE
0 50' 100'

VERTICAL SCALE
0 20' 40'

CROSS SECTION

ADJACENT PROPERTY OWNERS: 001 HEARTLAND FOREST LAND FUND	PLAN & CROSS SECTION VIEW RAMP B FILL SITE 99	PROPOSED ROAD CROSSING PROJECT: CREEK DA 104D COUNTY: BUCHANAN APPLICANT: SHEET OF DATE:

PLAN NO.	PROJECT	FILE NO.	SHEET NO.
	0121-013-101	SK102004A	

6-08-2004 10:20:36

bbrhol

Ref. File - f:\CMO166\Z1plfiles\06-02-04T&L EIS Permits\d64726dr100.dgn Ref. File - f:\CMO166\Z1plfiles\06-02-04T&L EIS Permits\d64726d00.dgn Ref. File - f:\CMO166\Z1plfiles\06-02-04T&L EIS Permits\ct xborder.dgn Ref. File - f:\CMO166\Z1plfiles\05-12-04\utl fs water Meas\Field D

FOR CONTINUATION SEE DRAWING SKI02004A

SITE NO
DAI04C

KBR
engineered by KBR
Technical Services Inc

GLENN DAVID RAUCHLE
VA REG 037388
FOR REVIEW ONLY
NOT FOR BIDDING
PERMITS OR
CONSTRUCTION
NOV 26, 2003

6-08-2004 10:22:39

bbrhoff

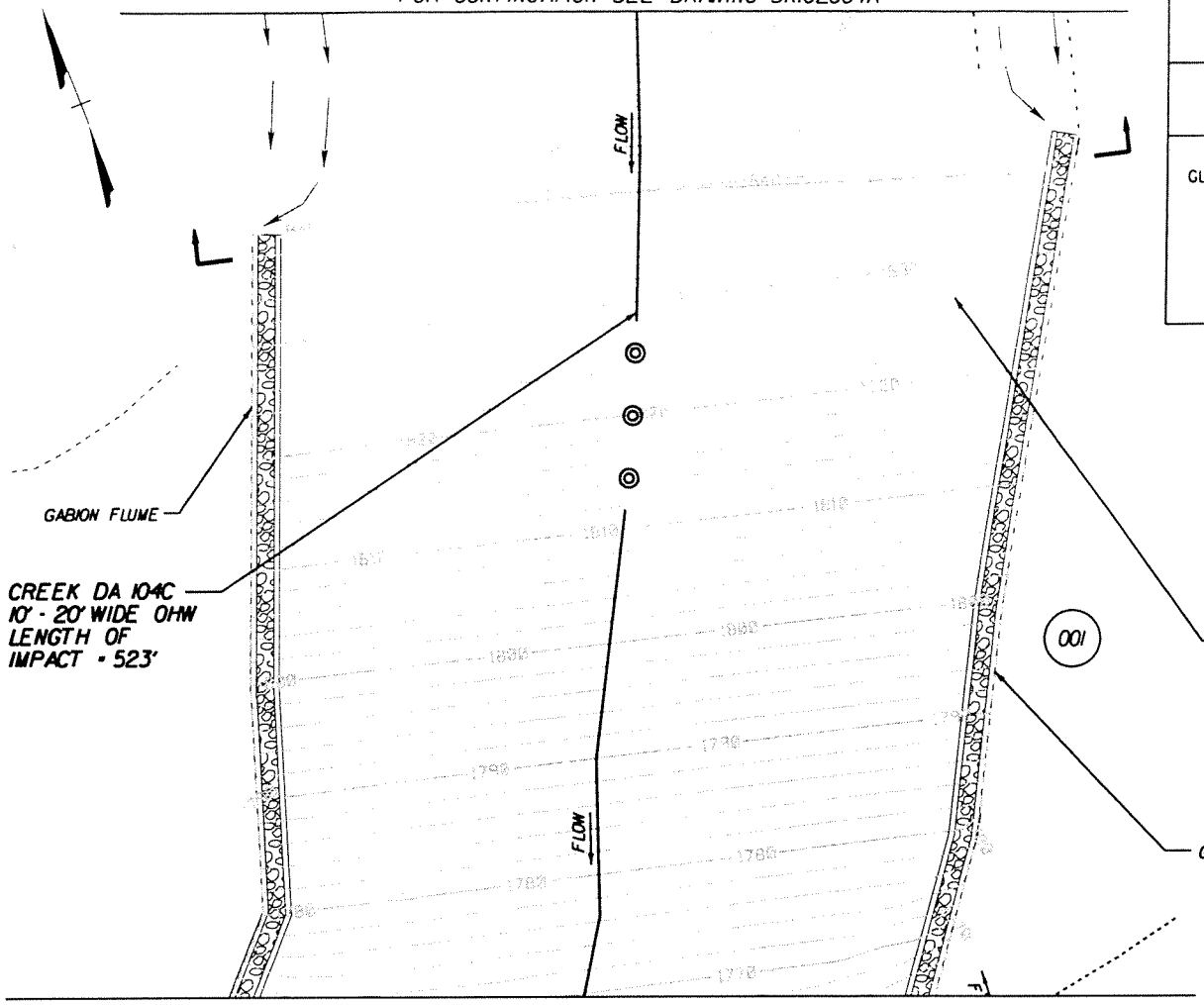

FOR CONTINUATION SEE DRAWING SKI02004C

PLAN

SCALE
0 50' 100'

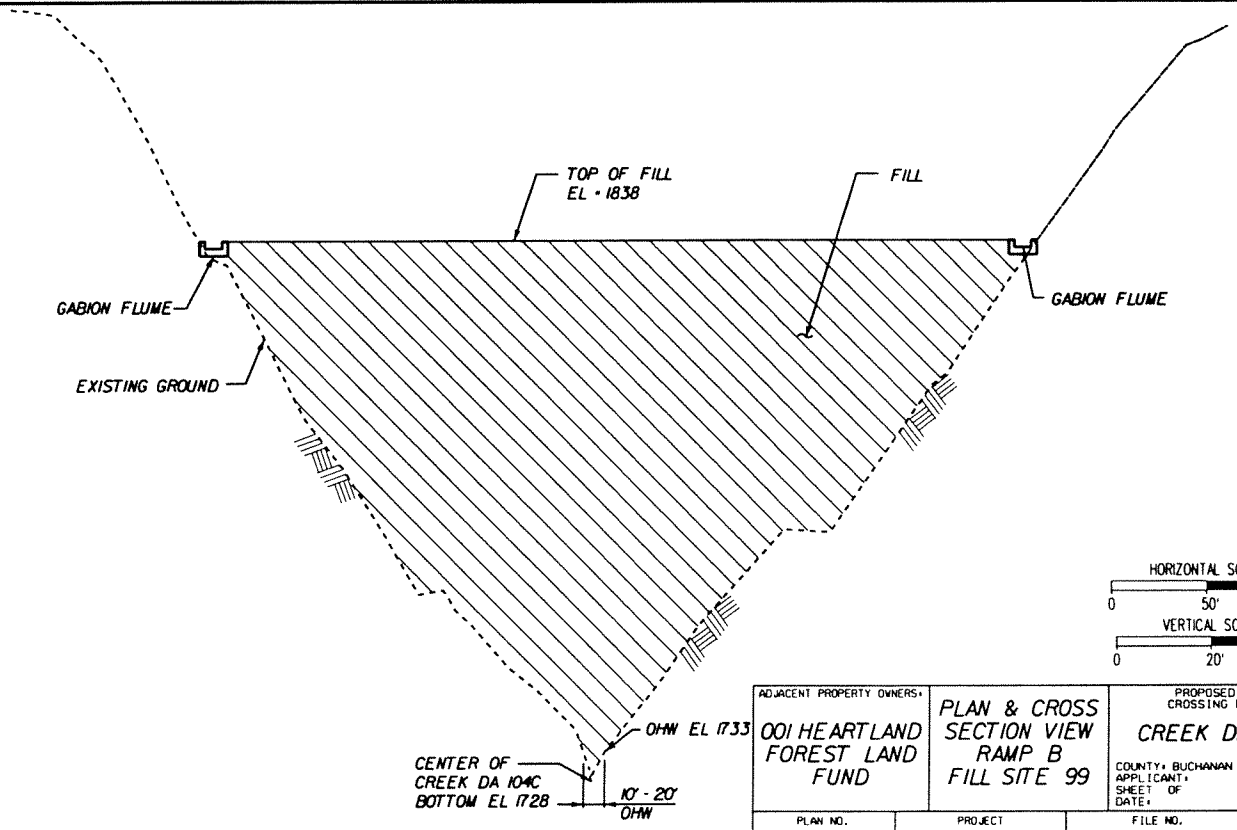

CROSS SECTION

HORIZONTAL SCALE
0 50' 100'
VERTICAL SCALE
0 20' 40'

ADJACENT PROPERTY OWNERS:		PROPOSED ROAD CROSSING PROJECT
001 HEARTLAND FOREST LAND FUND	PLAN & CROSS SECTION VIEW RAMP B FILL SITE 99	CREEK DA 104C COUNTY: BUCHANAN APPLICANT: SHEET OF DATE:

PLAN NO.	PROJECT	FILE NO.	SHEET NO.
	0121-013-101	SKI02004B	

Design File - 30021A\CADD\DGN\Permits\perm-PEM-DA-207b.dgn Ref. File - 30021A\CADD\DGN\Permits\permit-property.dgn Ref. File - 30021A\CADD\DGN\Permits\permitborder.dgn Ref. File - 30021A\CADD\DGN\s64726\s64726200.dgn

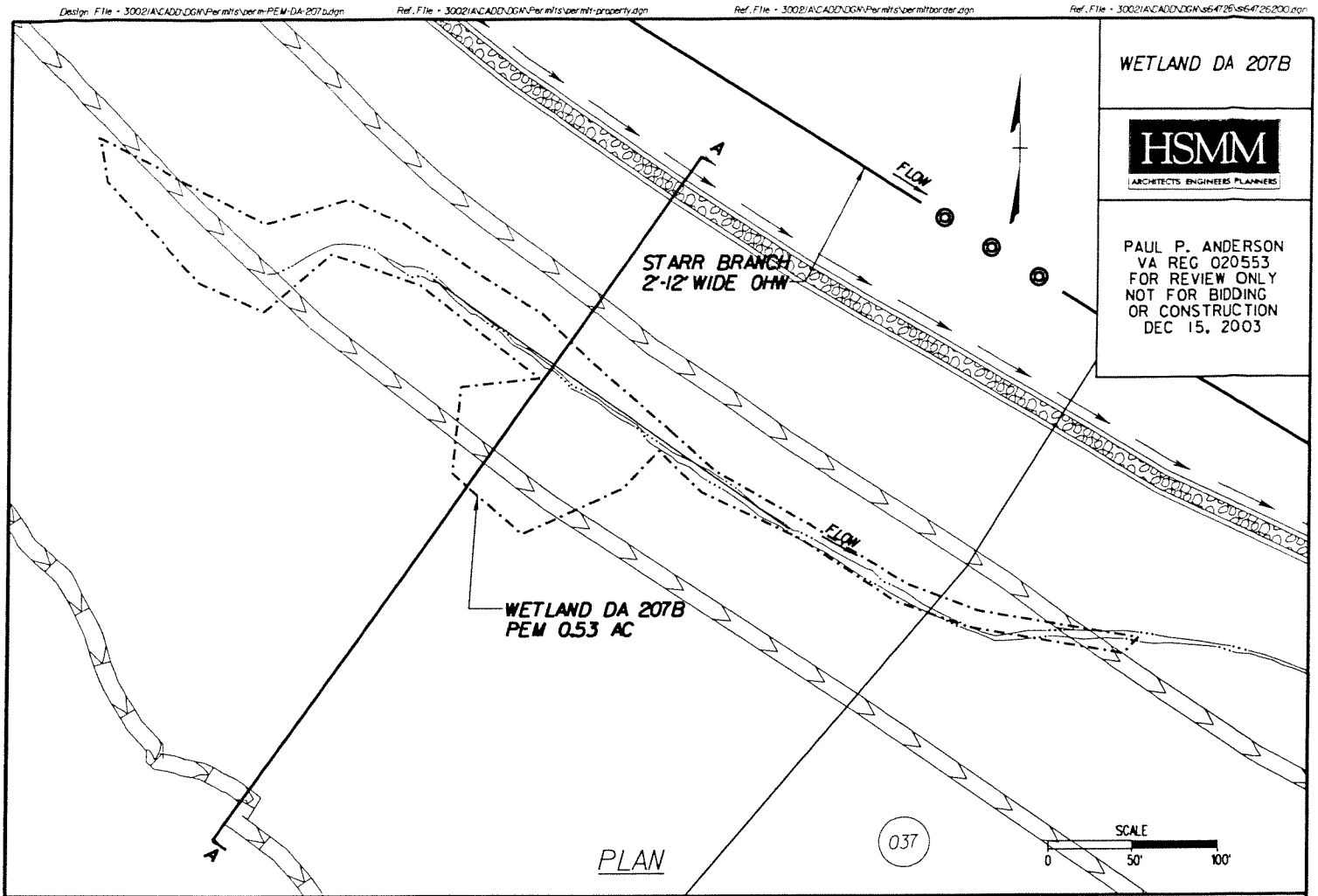

PLAN

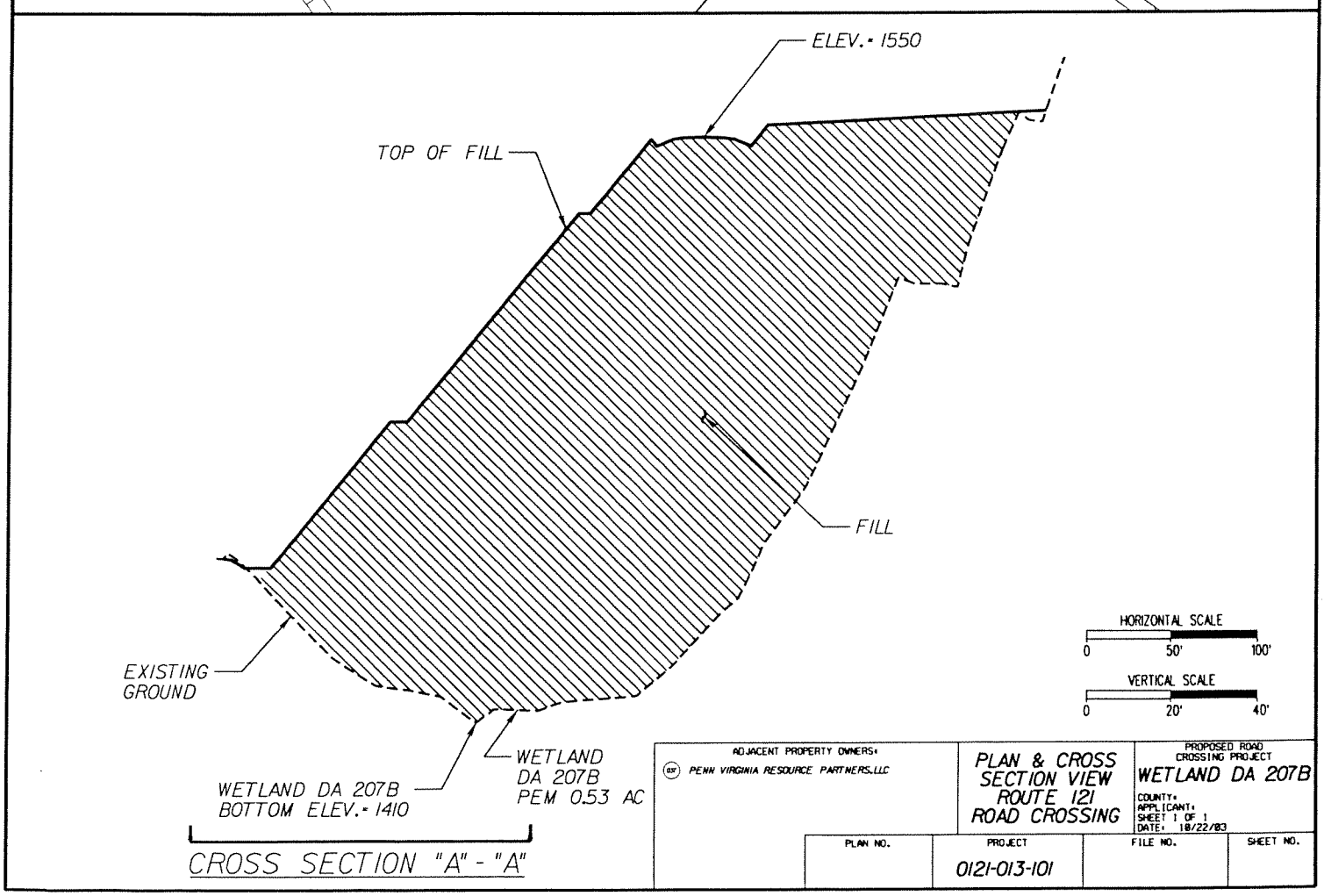

CROSS SECTION "A" - "A"

ADJACENT PROPERTY OWNERS:	PLAN & CROSS SECTION VIEW ROUTE 121 ROAD CROSSING	PROPOSED ROAD CROSSING PROJECT WETLAND DA 207B
037 PENN VIRGINIA RESOURCE PARTNERS, LLC		COUNTY: APPLICANT: SHEET 1 OF 1 DATE: 10/22/03

PLAN NO.	PROJECT	FILE NO.	SHEET NO.
	0121-013-101		

5-27-2004 21:34:27

cdavis

\C KBR\OPPMS\CADD FILENAME

Design File - 3002IA\CADD\DGN\Permits\perm-Starr-SS.dgn Ref. File - 3002IA\CADD\DGN\Permits\permit-property.dgn Ref. File - 3002IA\CADD\DGN\d64726\d64726200.dgn Ref. File - 3002IA\CADD\DGN\Permits\permitborder.dgn

WETLAND
DA 207C

HSMM
ARCHITECTS ENGINEERS PLANNERS

PAUL P. ANDERSON
VA REG 020553
FOR REVIEW ONLY
NOT FOR BIDDING
OR CONSTRUCTION
DEC 15, 2003

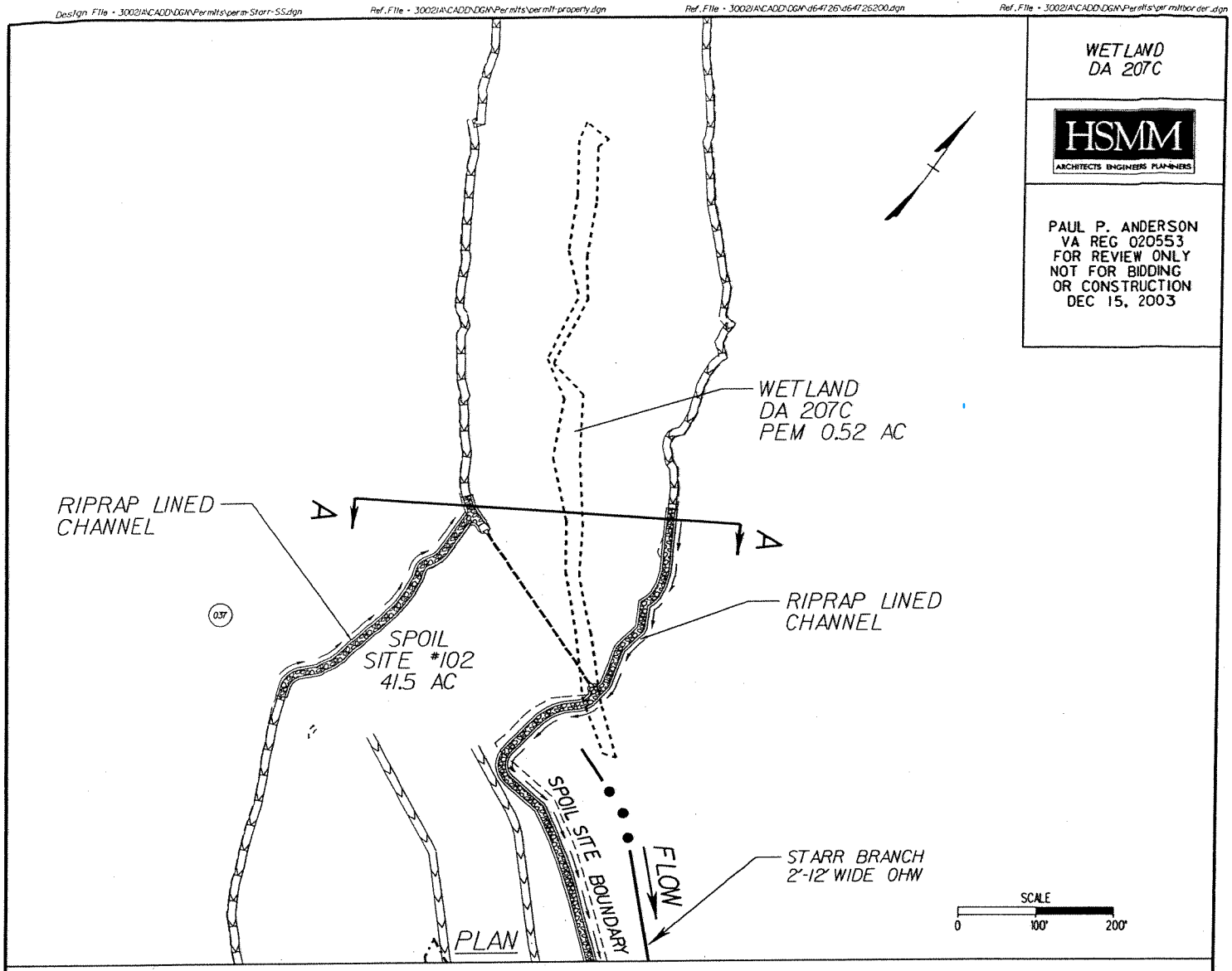

PLAN

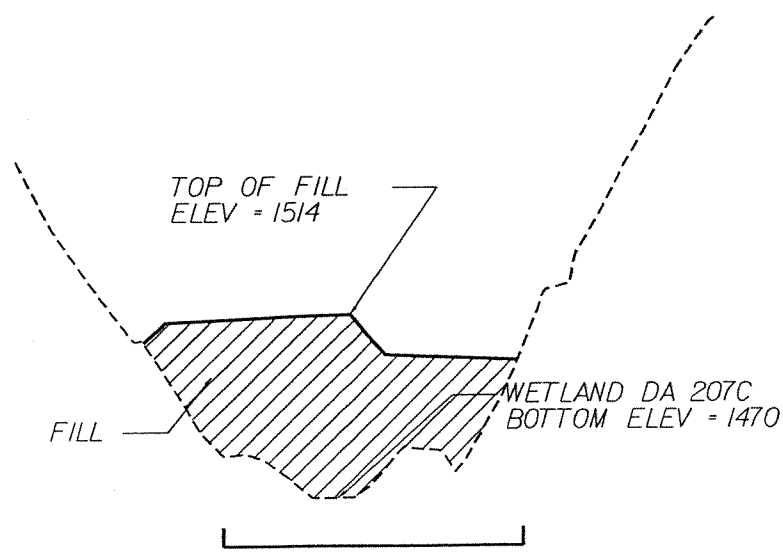

CROSS SECTION "A" - "A"

ADJACENT PROPERTY OWNERS:		PROPOSED ROAD CROSSING PROJECT
037 PENN VIRGINIA RESOURCE PARTNERS	ROUTE 121	WETLAND DA 207C COUNTY: APPLICANT: SHEET 1 OF 1 DATE: 10/22/03

PLAN NO.	PROJECT	FILE NO.	SHEET NO.
	0121-013-101		

6-29-2004 9:36:13

cdavis

\C KBR\DPMS\CADD FILENAME

Design File - 30021A\CADD\DGN\Permits\perm-PEM-DA-212.dgn
Ref. File - 30021A\CADD\DGN\64726\64726dr200.dgn
Ref. File - 30021A\CADD\DGN\64726\64726300.dgn
Ref. File - 30021A\CADD\DGN\64726\64726cr200.dgn

STREAM DA 212

HSMM
ARCHITECTS ENGINEERS PLANNERS

PAUL P. ANDERSON
VA REG 020553
FOR REVIEW ONLY
NOT FOR BIDDING
OR CONSTRUCTION
DEC 15, 2003

CONSTRUCTION LIMITS

℄ ROUTE 121

062

CONSTRUCTION LIMITS

061

FLOW

TRIB. TO BULL CREEK
(CONVICT HOLLOW)

GABION FLUMES

FLOW TO BE
REDIRECTED
TO DITCHES

SURPLUS SPOIL
SITE 103

062

FLOW

STREAM DA 212
5'-12' WIDE OHW
LENGTH OF IMPACT - 675'

065

SCALE
0 150' 300'

PLAN

GABION FLUMES

TOP OF FILL
EL. - 1334

FILL

STREAM DA 212

5'-12'
OHW

EXISTING
GROUND

HORIZONTAL SCALE
0 50' 100'

VERTICAL SCALE
0 20' 40'

CROSS SECTION "A" - "A"

ADJACENT PROPERTY OWNERS:
(061) JAMES R. STILTNER
(062) JAMES R. STILTNER
(065) STEVEN SMITH ET AL

PLAN & CROSS SECTION VIEW
ROUTE 121
ROAD CROSSING

PROPOSED ROAD CROSSING PROJECT
STREAM DA 212
COUNTY:
APPLICANT:
SHEET 1 OF 1
DATE: 10/22/03

PLAN NO.	PROJECT	FILE NO.	SHEET NO.
	0121-013-101		

6-01-2004 14:57:36
adavis
V:\KBROPPM\SCADD\FILENAME

STREAM DA 303A

KBR
Engineered by KBR Technical Services Inc

GLENN DAVID RAUCHLE
VA REG 037388
FOR REVIEW ONLY
NOT FOR BIDDING
OR CONSTRUCTION
APRIL 13, 2004

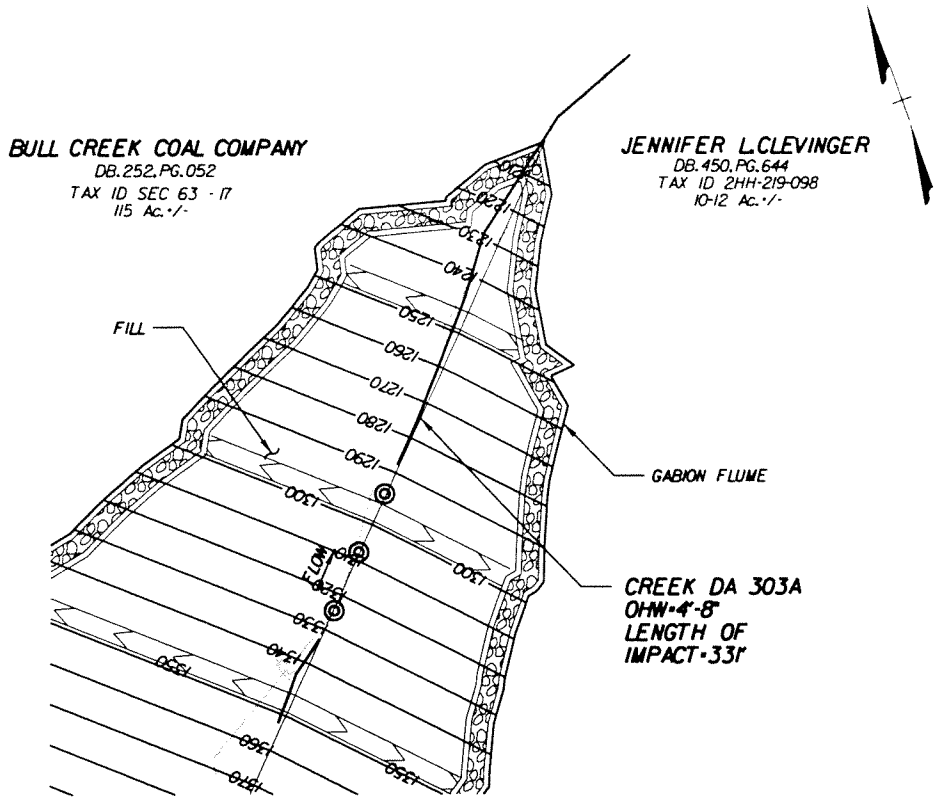

PLAN

SCALE
0 50' 100'

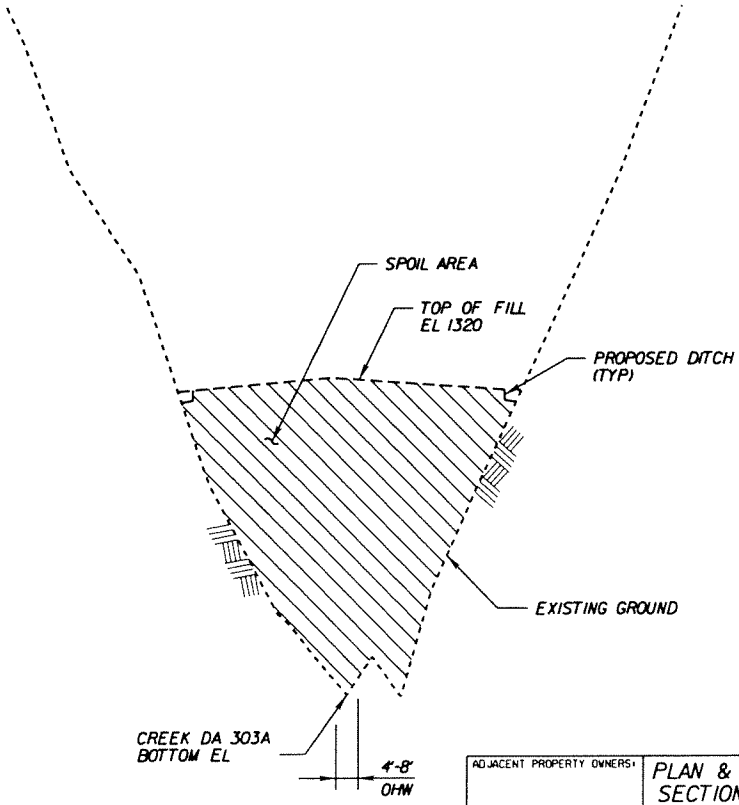

CROSS SECTION

HORIZONTAL SCALE
0 50' 100'

VERTICAL SCALE
0 20' 40'

ADJACENT PROPERTY OWNERS:	PLAN & CROSS SECTION VIEW ROUTE 121 ROAD CROSSING	PROPOSED ROAD CROSSING PROJECT CREEK DA 303A COUNTY: APPLICANT: SHEET 1 OF 1 DATE: 10/31/03

PLAN NO.	PROJECT	FILE NO.	SHEET NO.
	0121-013-101	SK041204M	

5-27-2004 22:02:27

bbrf141

HOUFILE023\CM0166\C KBR\SK041204M.DGN-02

Ref. File - f:\CM0166\C_KBR\Field Data_vdot.dgn
Levels on - 1-4, 6-24, 34-63

Ref. File - \\houfile023\hclv11$\cm0166\MDF\d64726300.dgn
Levels on - 1-3, 5-6, 11-13, 16-31

Ref. File - \\houfile023\hclv11$\cm0166\MDF\h64726dr300.dgn
Levels on - 1-2, 4-25, 27-31, 49-51, 55-57, 60-61

Ref. File - f:\CM0166\C_KBR\d64726301.dgn
Levels on - 1-3, 5-6, 11-13, 16-31

STREAMS DA 307A, DA 307B AND DA 307C

KBR
Engineered by KBR Technical Services Inc

GLENN DAVID RAUCHLE
VA REG 037388
FOR REVIEW ONLY
NOT FOR BIDDING
OR CONSTRUCTION
APRIL 13, 2004

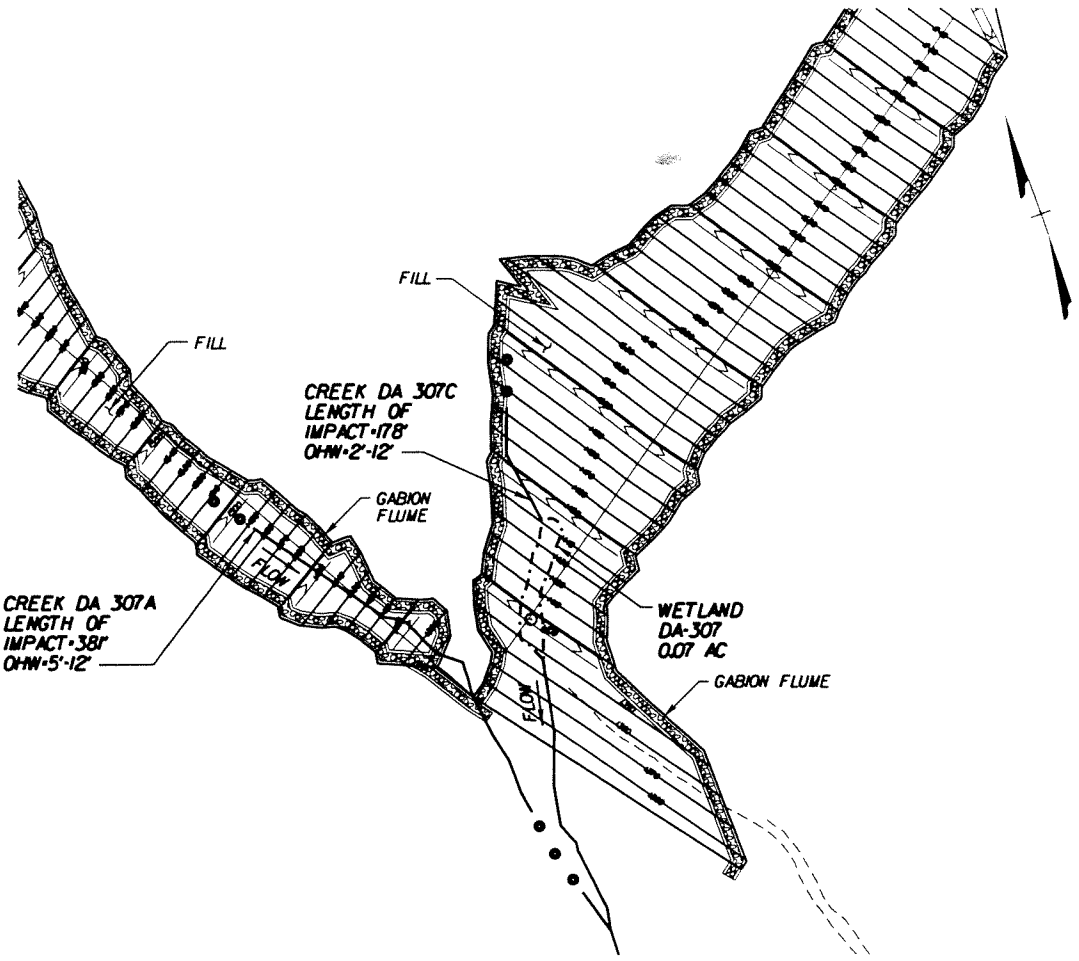

PLAN

SCALE
0 100' 200'

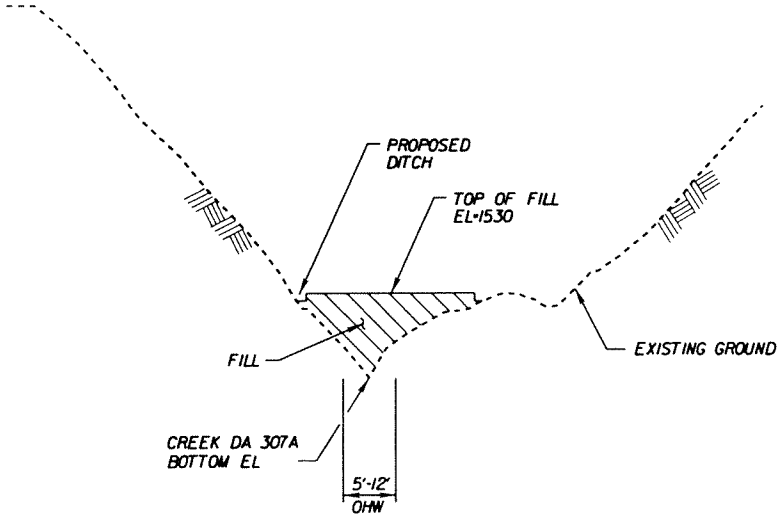

CROSS SECTION

HORIZONTAL SCALE
0 100' 200'

VERTICAL SCALE
0 20' 40'

ADJACENT PROPERTY OWNERS:	PLAN & CROSS SECTION VIEW ROUTE 121 ROAD CROSSING	PROPOSED ROAD CROSSING PROJECT CREEK DA 307A, DA 307B & DA 307C COUNTY: APPLICANT: SHEET 1 OF 1 DATE: 10/31/03	
PLAN NO.	PROJECT 0121-013-101	FILE NO. SK0412040	SHEET NO.

6-09-2004 1:28:59

bbrf141

HOUFILE023\CM0166\C_KBR\SK0412040.DGN-01

Ref. File: \\houfile023\hclvl1$\cm0166\MDF\s64726es301.dgn
Levels on: 1-63

Ref. File: \\houfile023\hclvl1$\cm0166\MDF\s64726300.dgn
Levels on: 1-63

Ref. File: \\houfile023\hclvl1$\cm0166\MDF\d64726cr300.dgn
Levels on: 2, 4, 9, 11, 25, 27, 31, 39, 41, 49, 51, 55, 57, 60, 61

Ref. File: f:\CM0166\C_KBR\COE_Sheet3.dgn
Levels on:

STREAM DA 320C

KBR
Engineered by KBR
Technical Services Inc

GLENN DAVID RAUCHLE
VA REG 037388
FOR REVIEW ONLY
NOT FOR BIDDING
OR CONSTRUCTION
APRIL 13, 2004

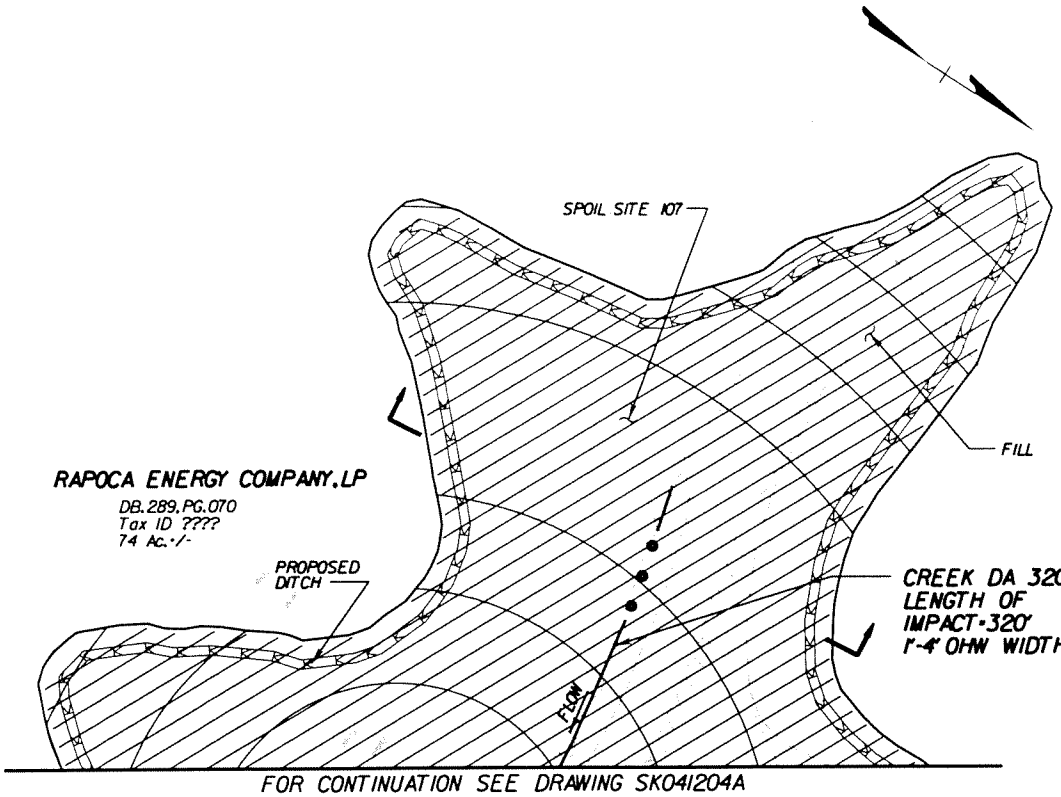

FOR CONTINUATION SEE DRAWING SK041204A

PLAN

SCALE
0 100' 200'

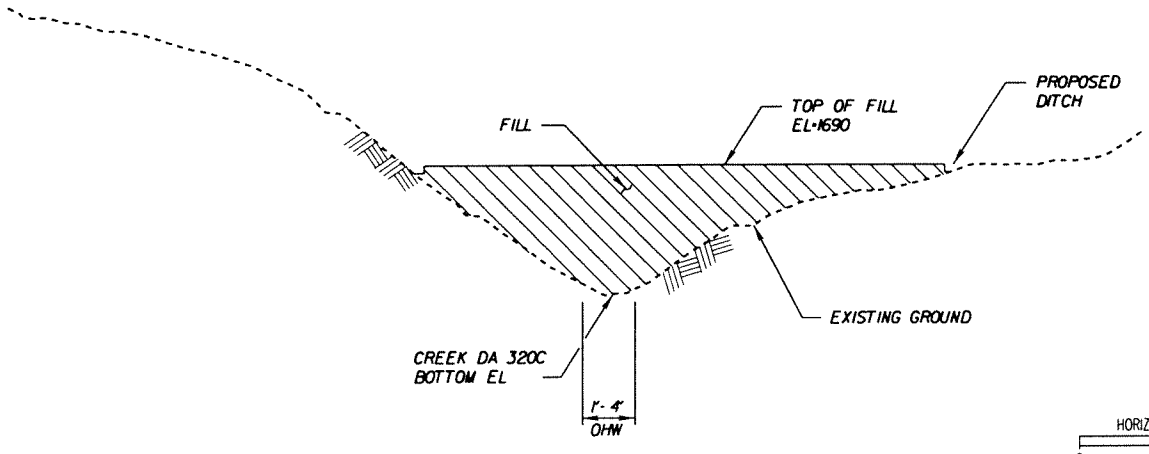

HORIZONTAL SCALE
0 100' 200'

VERTICAL SCALE
0 40' 80'

CROSS SECTION

ADJACENT PROPERTY OWNERS:	PLAN & CROSS SECTION VIEW ROUTE 121 ROAD CROSSING	PROPOSED ROAD CROSSING PROJECT CREEK DA 320C COUNTY: APPLICANT: SHEET 1 OF 1 DATE: 10/31/03	
PLAN NO.	PROJECT 0121-013-101	FILE NO. SK041204	SHEET NO.

6-08-2004 3:30:02

bbrf141

HOUFILE023\CM0166\C KBR\SK041204.DGN-02

Ref. File - \\houfile023\hclvlt$\cm0166\MDF\d64726cr300.dgn
Levels on - 2, 4, 9, 11, 25, 27, 31, 49, 51, 55, 57, 60, 61

Ref. File - \\houfile023\hclvlt$\cm0166\MDF\s64726300.dgn
Levels on - 1, 63

Ref. File - f:\CM0166\C_KBR\COE_Sheet3.dgn
Levels on - 1

Ref. File - \\houfile023\hclvlt$\cm0166\MDF\cf xbl rd
Levels on - 1, 3, 5, 17, 53, 61, 63

CREEK DA 320
& DA 320D

KBR
Engineered by KBR
Technical Services, Inc

GLENN DAVID RAUCHLE
VA REG 03738B
FOR REVIEW ONLY
NOT FOR BIDDING
OR CONSTRUCTION
APRIL 13, 2004

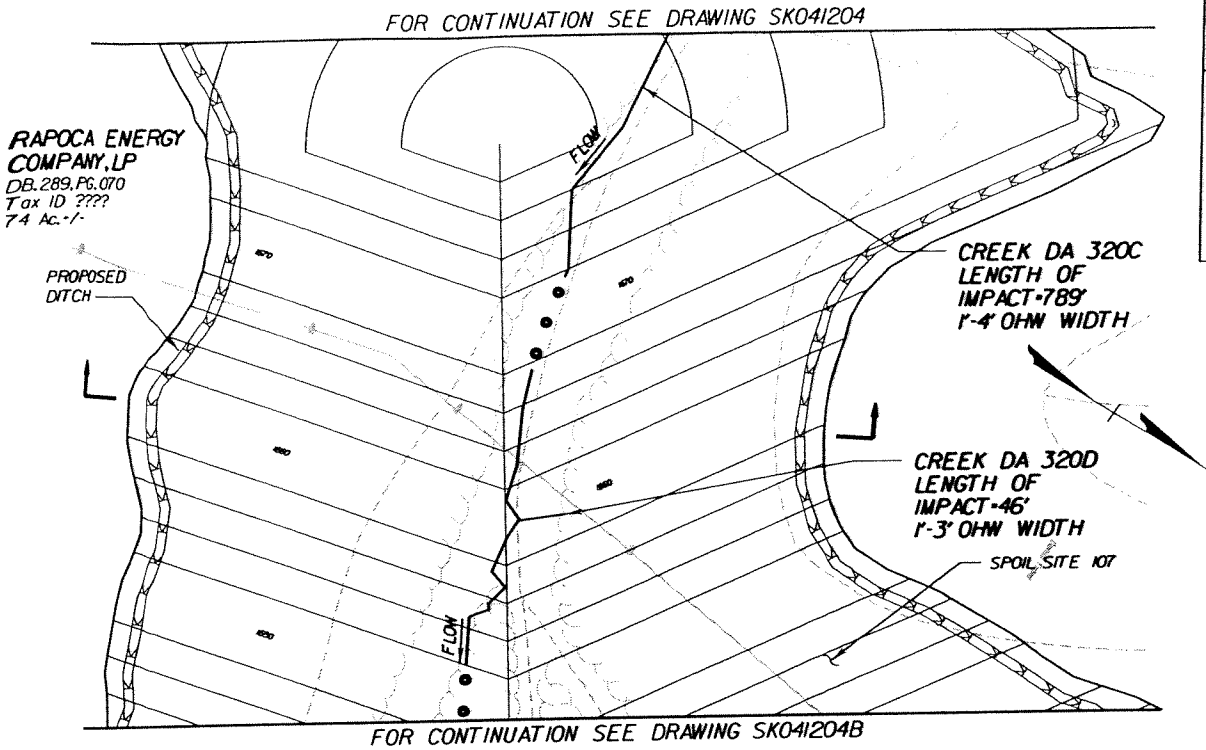

PLAN

SCALE
0 100' 200'

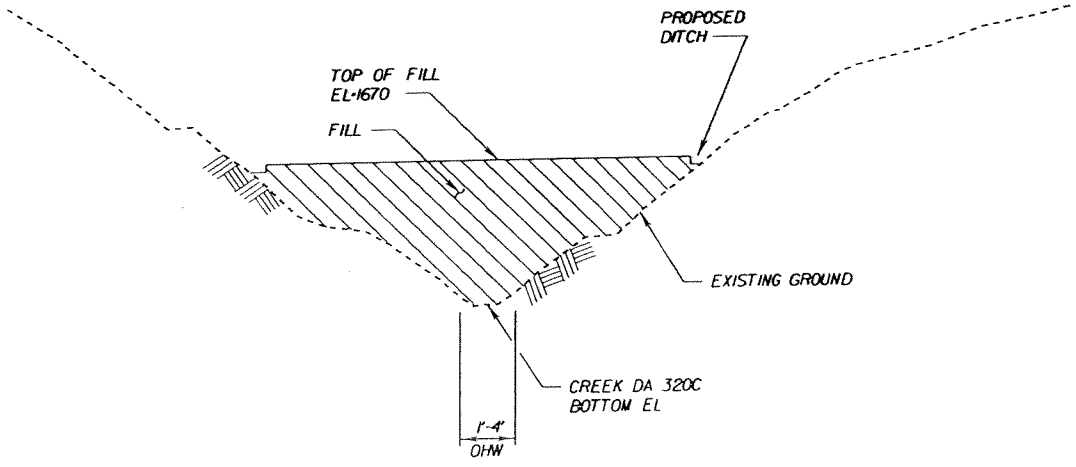

HORIZONTAL SCALE
0 100' 200'

VERTICAL SCALE
0 40' 80'

CROSS SECTION

ADJACENT PROPERTY OWNERS:	PLAN & CROSS SECTION VIEW ROUTE 121 ROAD CROSSING	PROPOSED ROAD CROSSING PROJECT CREEK DA 320C & DA 320D COUNTY: APPLICANT: SHEET 1 OF 1 DATE: 10/31/03

PLAN NO.	PROJECT	FILE NO.	SHEET NO.
	0121-013-101	SK041204A	

6-29-2004 1:45:18

hbat150

HOUFILE023\CM0166\C KBR\SK041204A.DGN-03

Ref. File - F:\CW0166C_KBR\sk041204A.dgn
Levels on - 1-3, 5 - 63
Ref. File - \\houfile023\hchill$\cm0166\MDF\s64726300.dgn
Levels on - 1 - 63
Ref. File - \\houfile023\hchill$\cm0166\MDF\d64726sr300.dgn
Levels on - 2, 4 - 8, 10 - 25, 27, 31 - 49, 51 - 55, 57, 60 - 61
Ref. File - F:\CW0166C_KBR\CDE_Sheet3.dgn
Levels on - 1

STREAM DA 320 & DA 320A

KBR
Engineered by KBR Technical Services, Inc

GLENN DAVID RAUCHLE
VA REG 037388
FOR REVIEW ONLY
NOT FOR BIDDING
OR CONSTRUCTION
APRIL 13, 2004

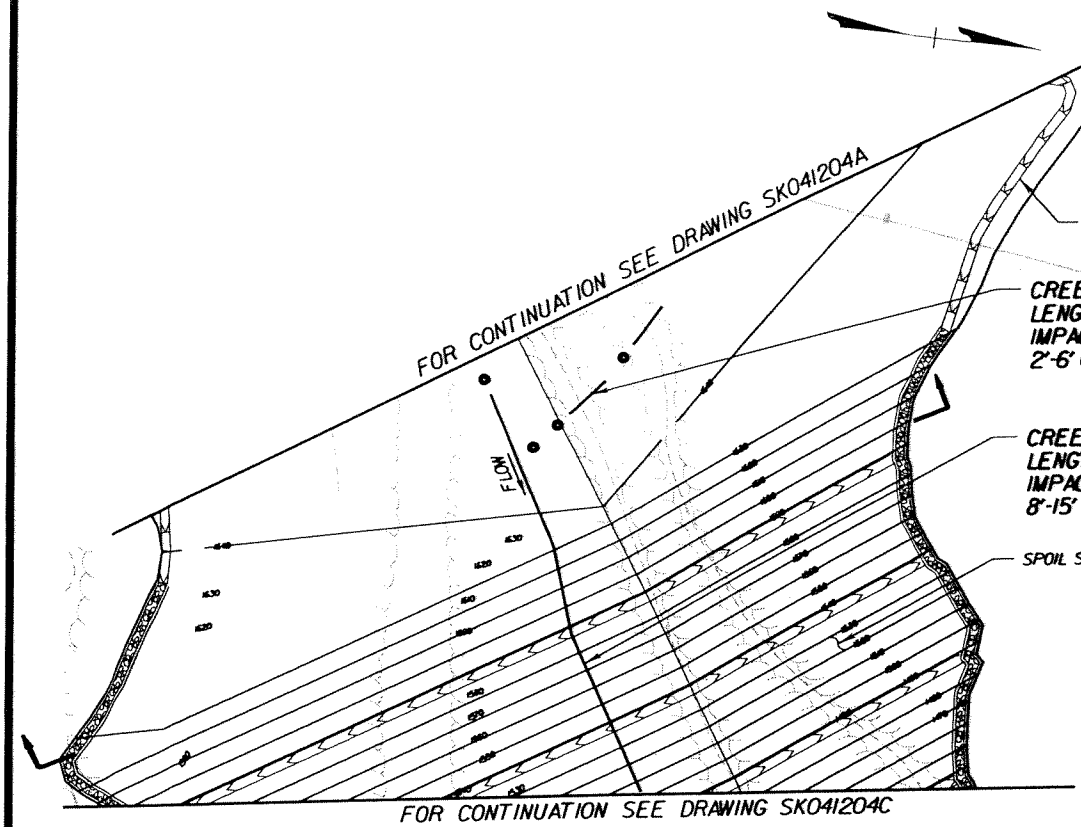

PLAN

SCALE
0 100' 200'

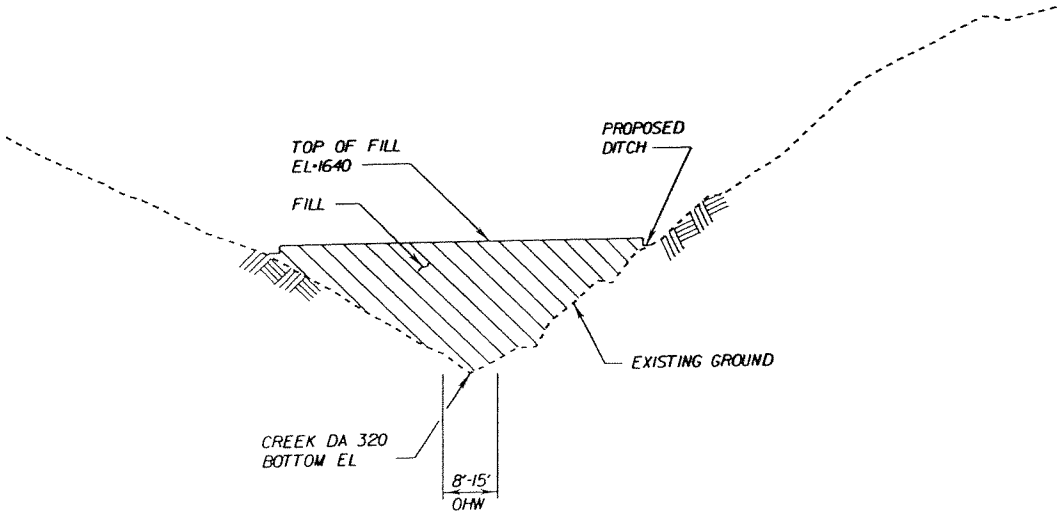

CROSS SECTION

HORIZONTAL SCALE
0 100' 200'
VERTICAL SCALE
0 40' 80'

ADJACENT PROPERTY OWNERS:	PLAN & CROSS SECTION VIEW ROUTE 121 ROAD CROSSING	PROPOSED ROAD CROSSING PROJECT CREEK DA 320 & 320A COUNTY: APPLICANT: SHEET 1 OF 1 DATE: 10/31/03

PLAN NO.	PROJECT	FILE NO.	SHEET NO.
	0121-013-101	SK041204B	

6-29-2004 1:46:11
hbarl50
HOUFILE023\CW0166C_KBR\SK041204B.DGN-03

Ref_File - f:\CM0166\C_KBR\CDE_Sheet_1.dgn
Levels on - 1
Ref_File - f:\CM0166\C_KBR\Field Data_v001.dgn
Levels on - 1 - 3, 5, 12 - 13, 62
Ref_File - \\houfile02\hdlvlib\cm0166\MUF\cf xborder.dgn
Levels on - 1, 3, 5, 17, 53, 61, 63
Ref_File - f:\CM0166\C_KBR\sk102003.dgn
Levels on - 1 - 63

STREAM DA 320 & 320B

KBR
Engineered by KBR Technical Services, Inc

GLENN DAVID RAUCHLE
VA REG 037388
FOR REVIEW ONLY
NOT FOR BIDDING
OR CONSTRUCTION
APRIL 13, 2004

FOR CONTINUATION SEE DRAWING SK041204B

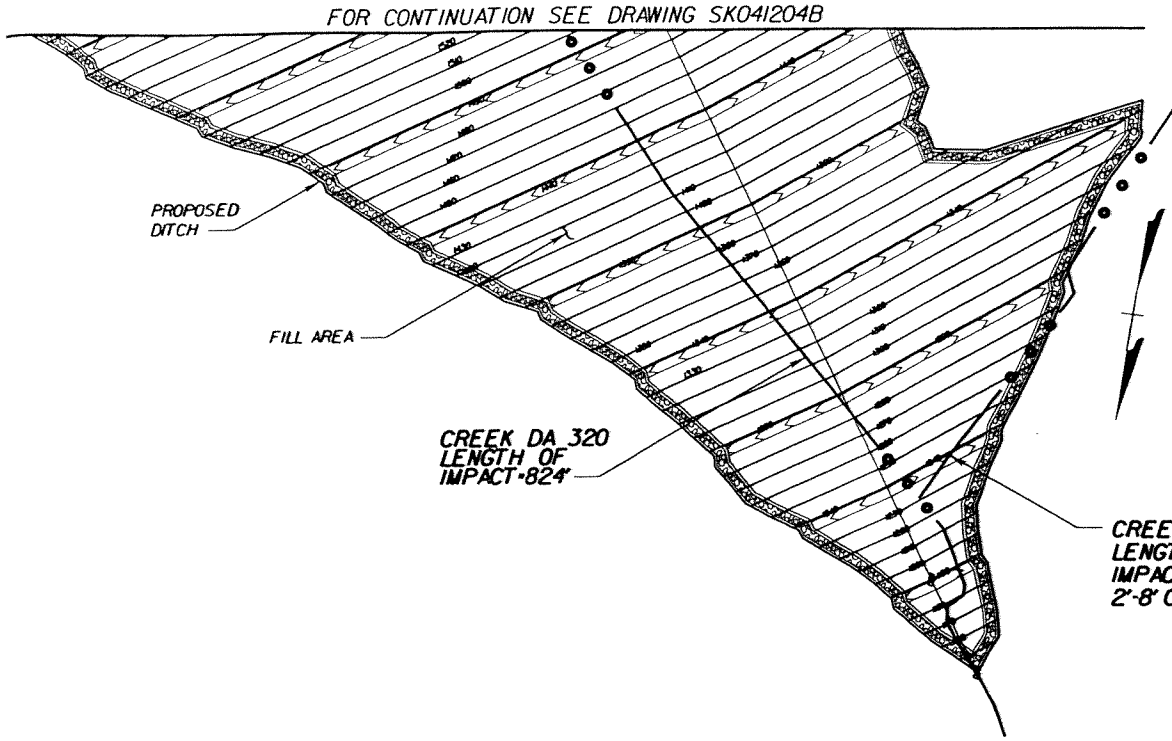

PLAN

SCALE
0 100' 200'

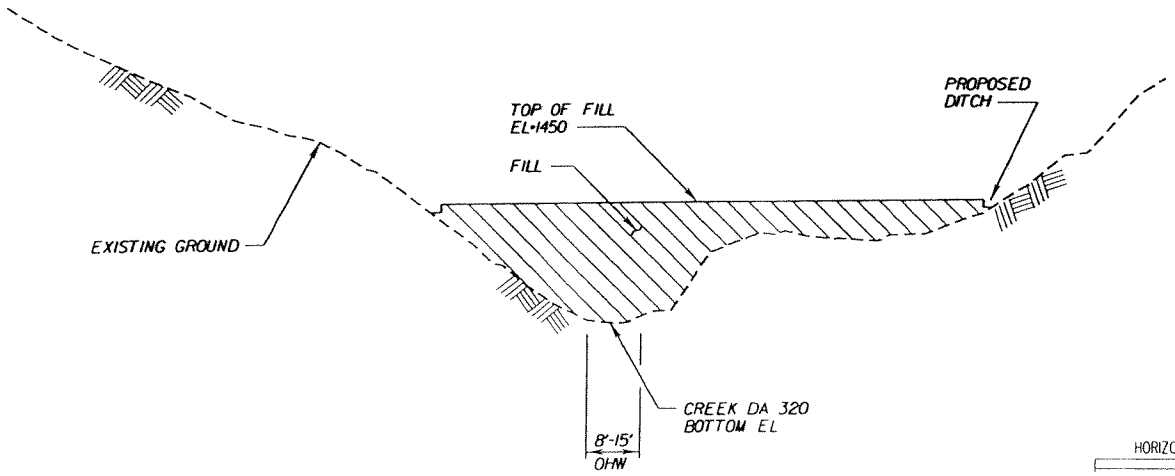

HORIZONTAL SCALE
0 100' 200'
VERTICAL SCALE
0 40' 80'

CROSS SECTION

ADJACENT PROPERTY OWNERS:	PLAN & CROSS SECTION VIEW ROUTE 121 ROAD CROSSING	PROPOSED ROAD CROSSING PROJECT CREEK DA 320 & DA 320B COUNTY: APPLICANT: SHEET 1 OF 1 DATE: 10/31/03

PLAN NO.	PROJECT	FILE NO.	SHEET NO.
	0121-013-101	SK041204C	

6-29-2004 1:47:04
hbarl50
HOUFILE02\CM0166\C_KBR\SK041204C.DGN-02