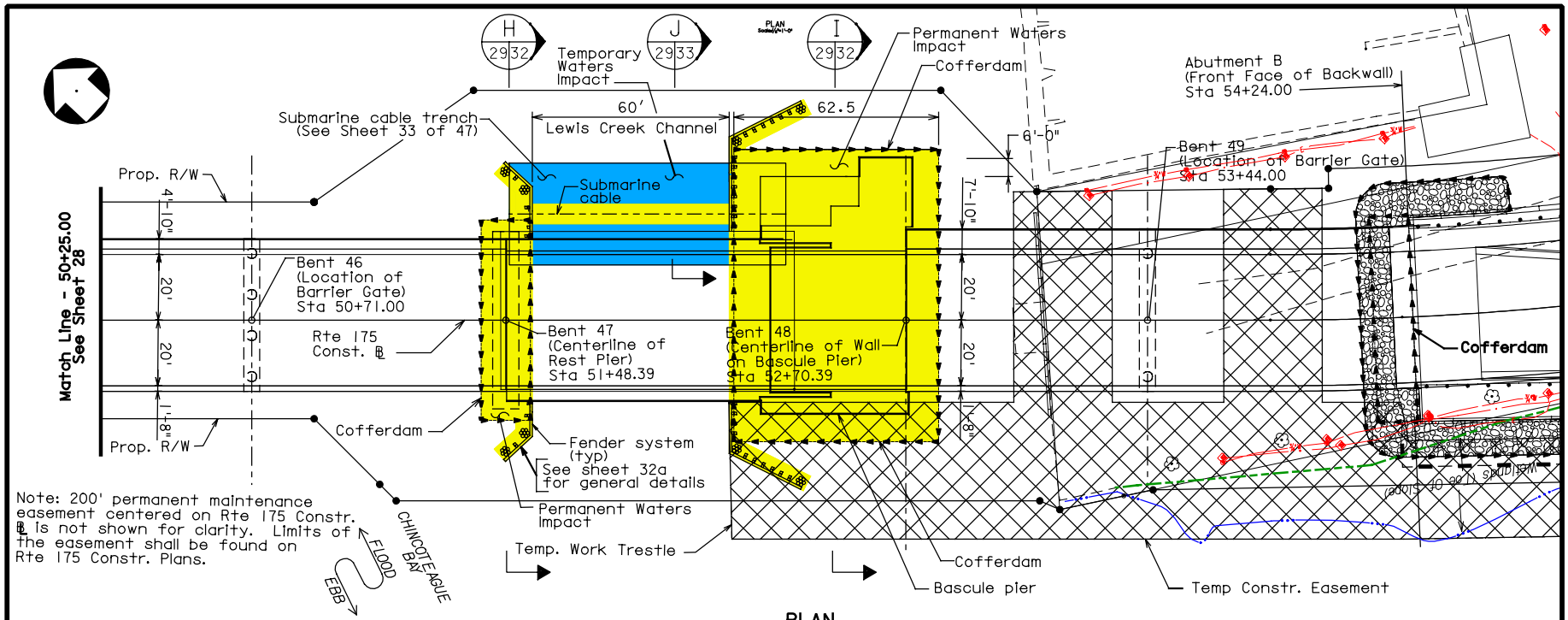

PLAN

Impacts due to approach roadway and bridge abutment are shown and quantified on sheets 9 & 10

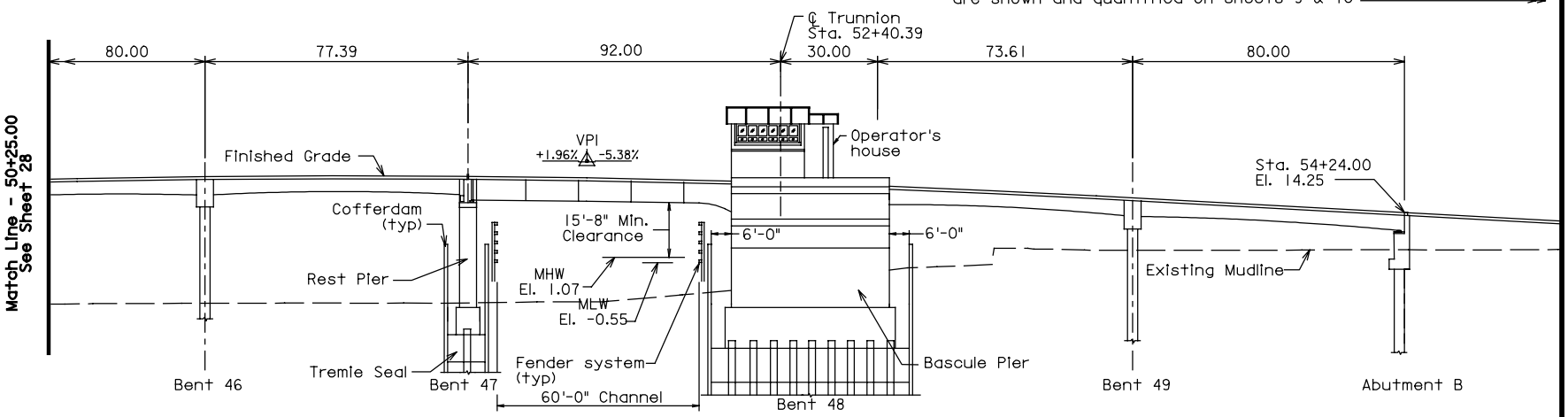

IMPACTS (This Sheet)	
Type of Impact	Area- Sq. Ft./Acre
Permanent Waters	7441 / 0.171
Temporary Waters	1528 / 0.035

DEVELOPED ELEVATION

SCALE: 1" = 50'
0 20' 40'

PROPOSED RTE 175 BRIDGE REPLACEMENT PROJECT
ACCOMACK COUNTY
CHINCOTEAGUE, VIRGINIA

PROJECT NO. 0175-001-V12
PE-102, RW-202, C-502, B-606

FED. PROJ. NO. RS-1622(105)
BR-STP-175-5

APPLICATION BY
VIRGINIA DEPARTMENT OF TRANSPORTATION