# Surry - Skiffes Creek 500 kV Transmission Line

$SYTIME$

| DRAWINGS REQ'D FOR STRUCTURE | | PAGE NO. |
|---|---|---|
| QTY | STANDARD DWG NO. | DESCRIPTION |
| 3 | 95.816 | LADDER CLIPS |
| | | |
| | | |
| | | |
| | | |
| | | |
| | | |
| | | |
| | | |

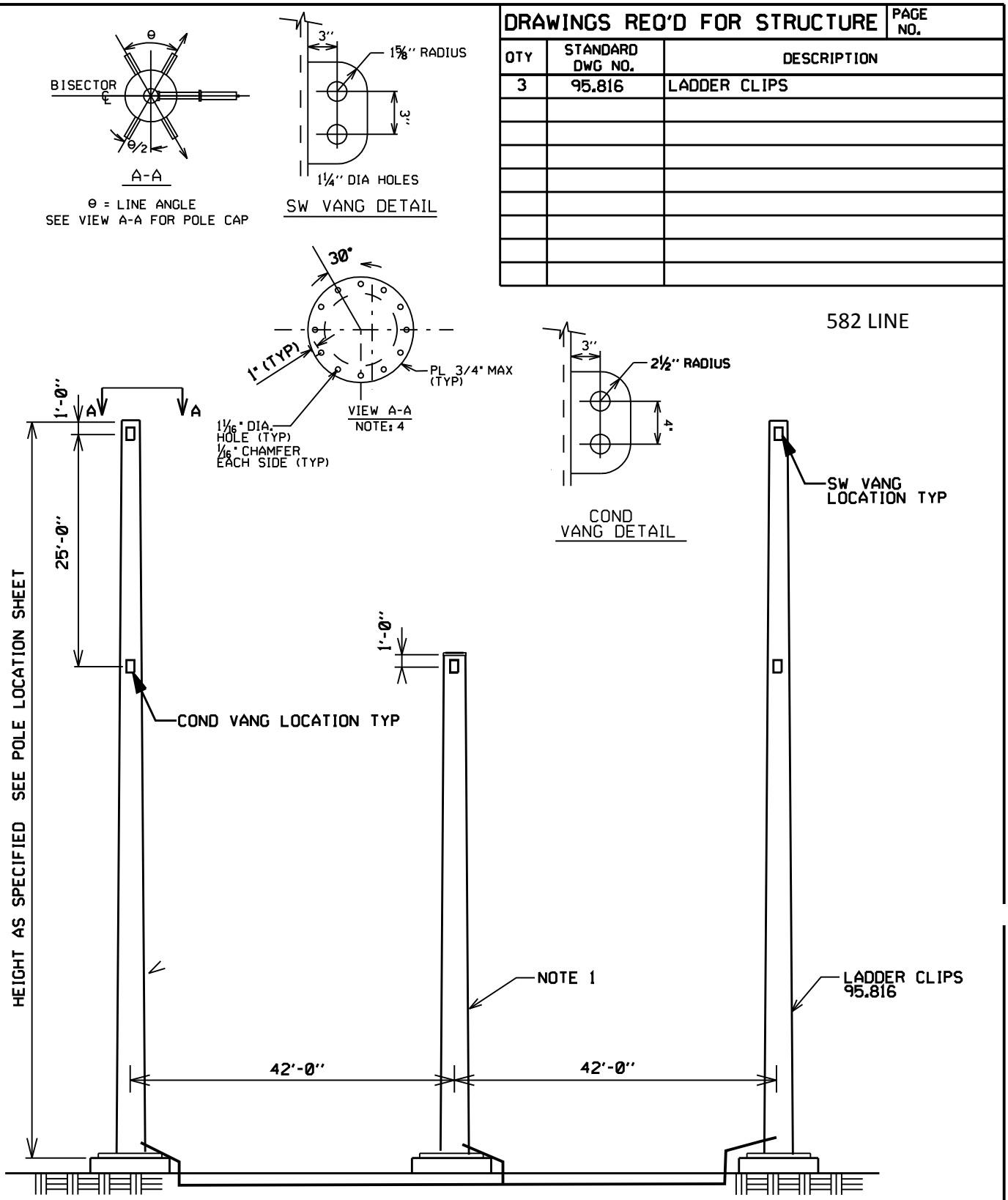


Proposed Tower Structure

582/2

Terrestrial Crossing

Sheet 1

$DGNSPEC$

TESBORD1

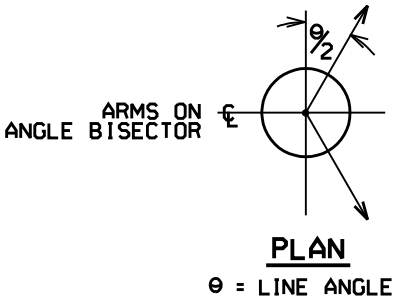


| DRAWINGS REQ'D FOR STRUCTURE | | PAGE NO. |
|---|---|---|
| QTY | DWG. NO. | DESCRIPTION |
| 2 | 95.550 | 8' STATIC ARM |
| 3 | 95.561 | COND. ARM |
| 1 | 95.815 | LADDER CLIPS |
| | | |
| | | |
| | | |

582 LINE

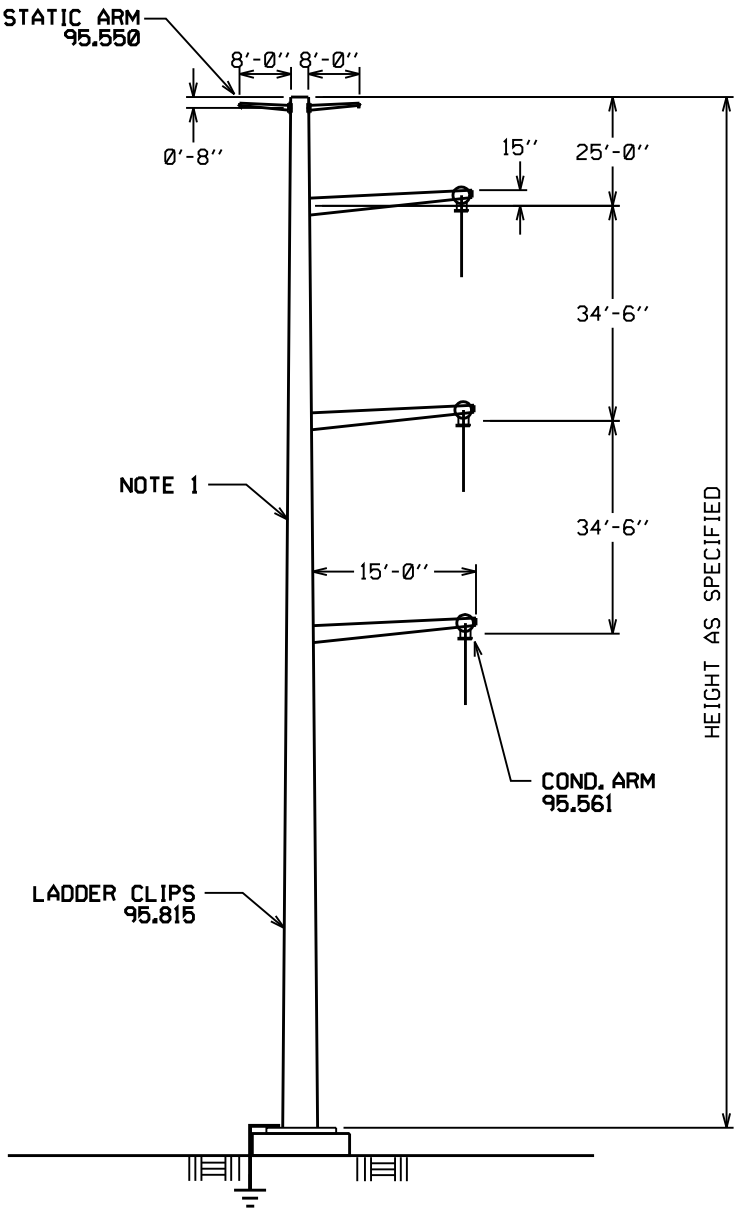


Proposed Tower Structure

582/3

Terrestrial Crossing

Sheet 2

95.510

$SYTIME$

$DGNSPEC$

TESBORD1

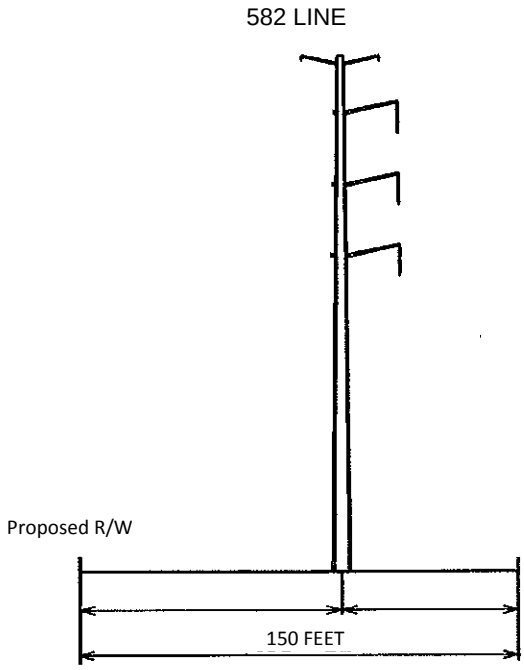


## Proposed Tower Structures

582/4 thru 582/11

Terrestrial Crossing

$DGNSPEC$

| DRAWINGS REQ'D FOR STRUCTURE | | |
|---|---|---|
| QTY | STANDARD DWG NO. | DESCRIPTION |
| 2 | 35.252 | SHORT D.E. ASSY |
| 4 | 35.250 | LONG D.E. ASSY |
| 4 | 35.290 | JUMPER ASSY |
| 1 | 35.042 | JUMPER APPLICATIONS |
| 3 | 39.500 | JUMPER LOOP BUNDLED |
| | | |
| | | |

| DRAWINGS REQ'D FOR STRUCTURE | | PAGE NO. |
|---|---|---|
| QTY | STANDARD DWG NO. | DESCRIPTION |
| 1 | 60.914 | COUNTERPOISE INSTALLATION |
| 1 | 60.915 | STRUCTURE GROUNDING |
| 1 | 60.940 | GROUNDING INSTRUCTIONS |
| 1 | 80.010 | INSTRUCTIONS FOR STR. NUMBERING |
| 1 | 80.160 | NUMBERING OF STEEL TOWERS, LOWER |
| 1 | 80.162 | NUMBERING OF STEEL TOWERS, AERIAL |
| 1 | 80.164 | WARNING SIGN |
| 4 | 96.050 | FOSW ARMOR GRIP DE ASSY |

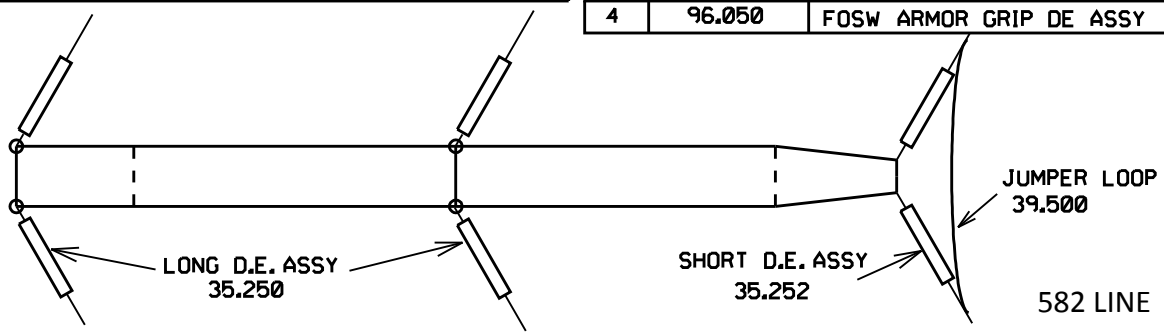


PLAN

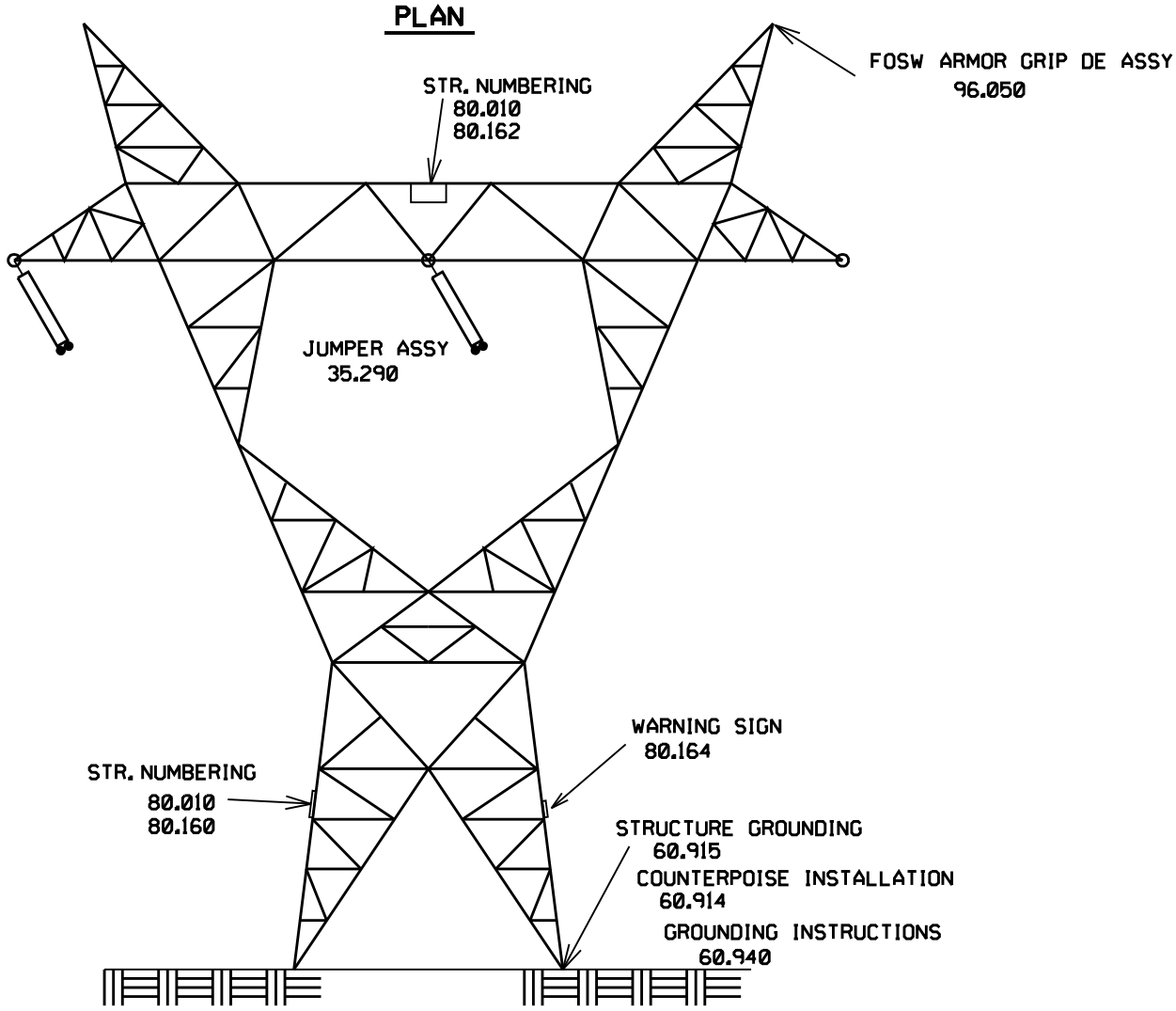


Proposed Tower Structures

582/12, 582,15, 582/20, 582/29, and 582/31

Terrestrial and River Crossing



$SYTIME$
$DGNSPEC$
TESBORD1

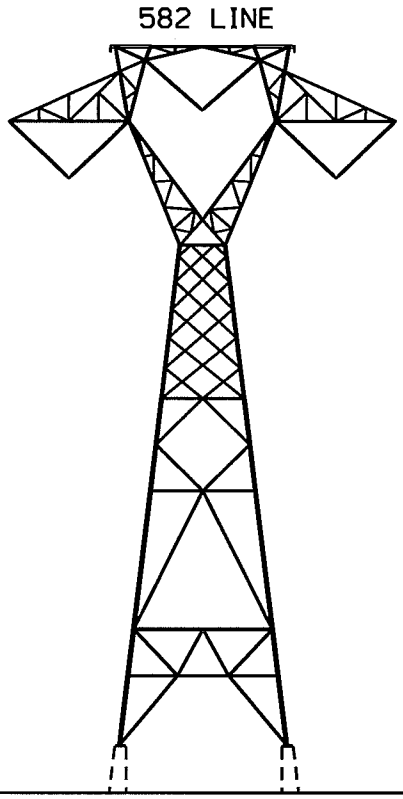


Proposed Tower Structures

582/13 thru 582/14

582/16 thru 582/19

582/23 thru 582/24

528/27 thru 528/28

River Crossing

$DGNSPEC$

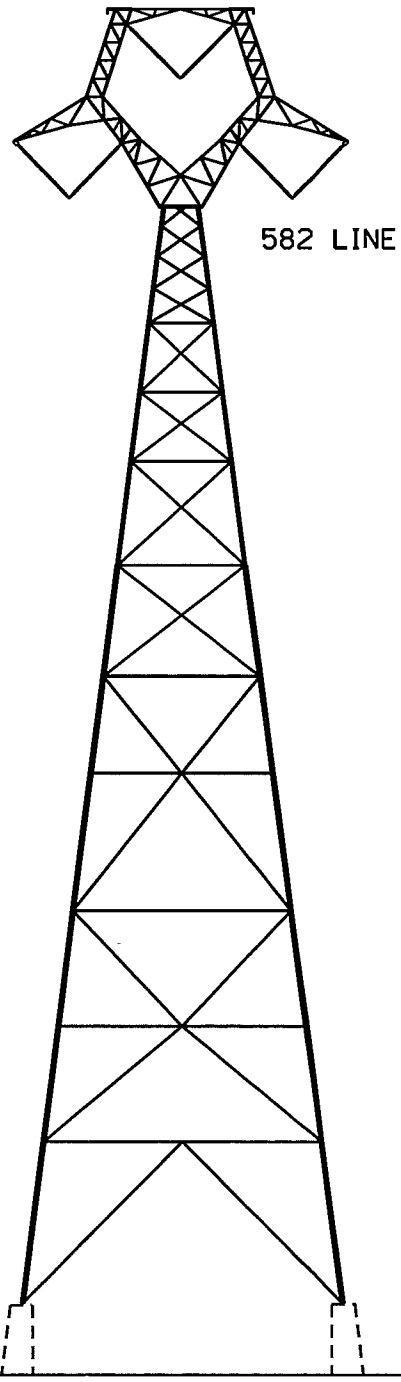


Proposed Tower Structures

582/21 thru 582/22

Secondary Navigational Channel Crossing

Sheet 6

$DGNSPEC$

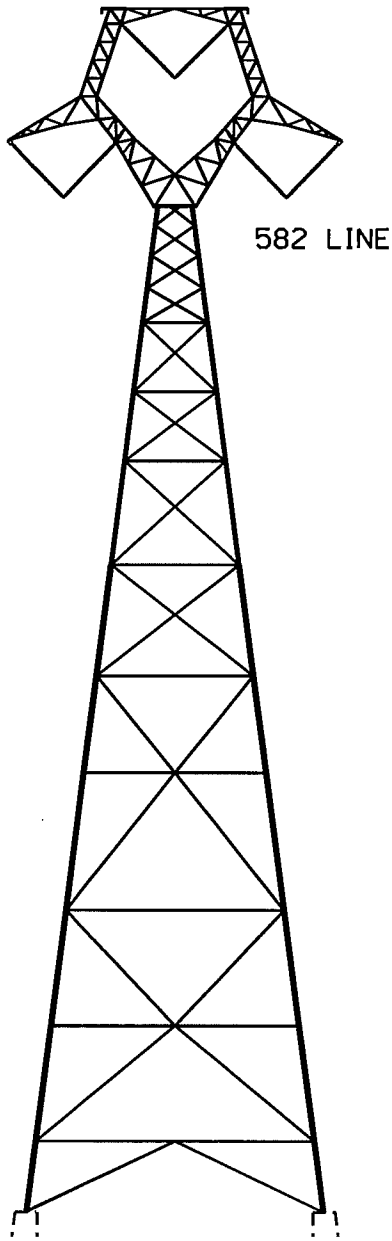


Proposed Tower Structures

582/25 thru 582/26

Federal Navigational Channel Crossing

Sheet 7

$DGNSPEC$

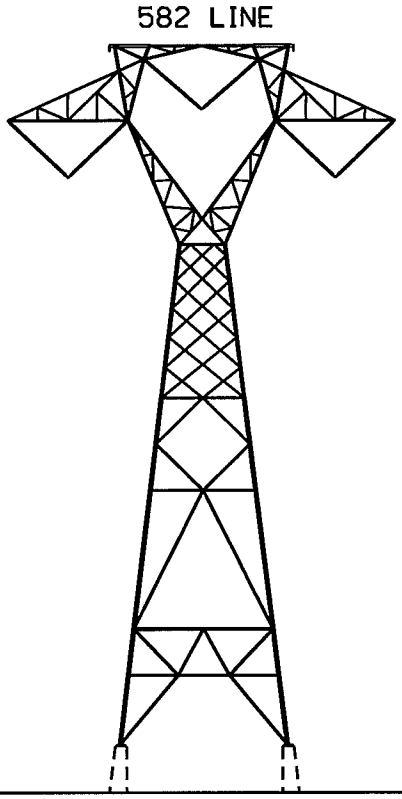


Proposed Tower Structures

582/30 and 582/32

Terrestrial Crossing

$DGNSPEC$

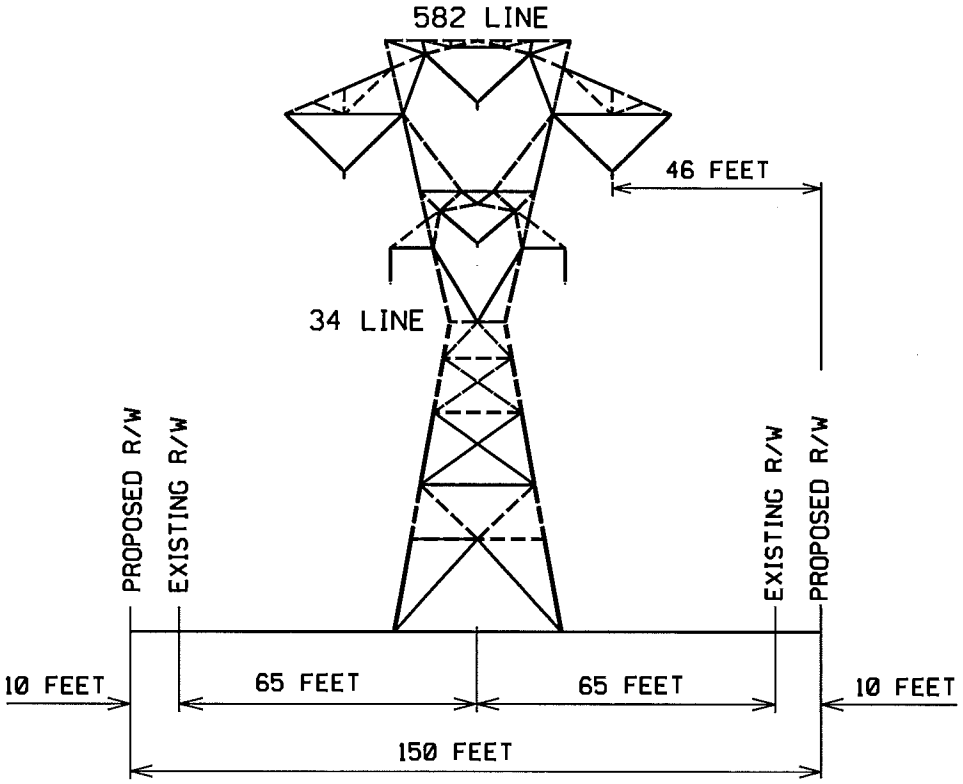


Proposed Tower Structures

582/33 thru 582/37

Terrestrial Crossing

$DGNSPEC$

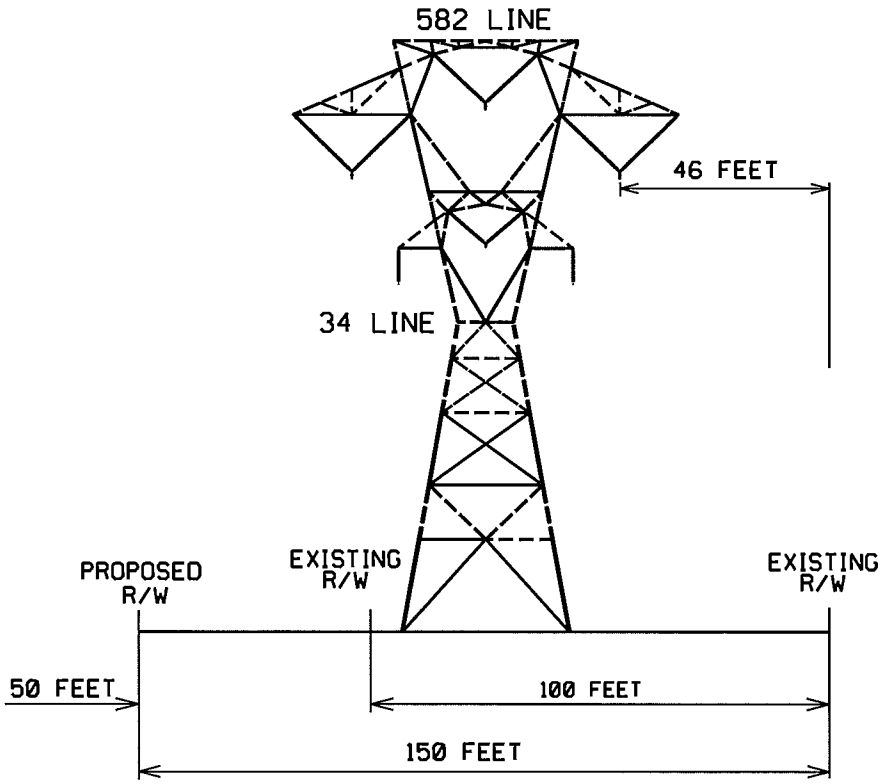


Proposed Tower Structures

582/38 thru 582/40

Terrestrial Crossing

$DGNSPEC$

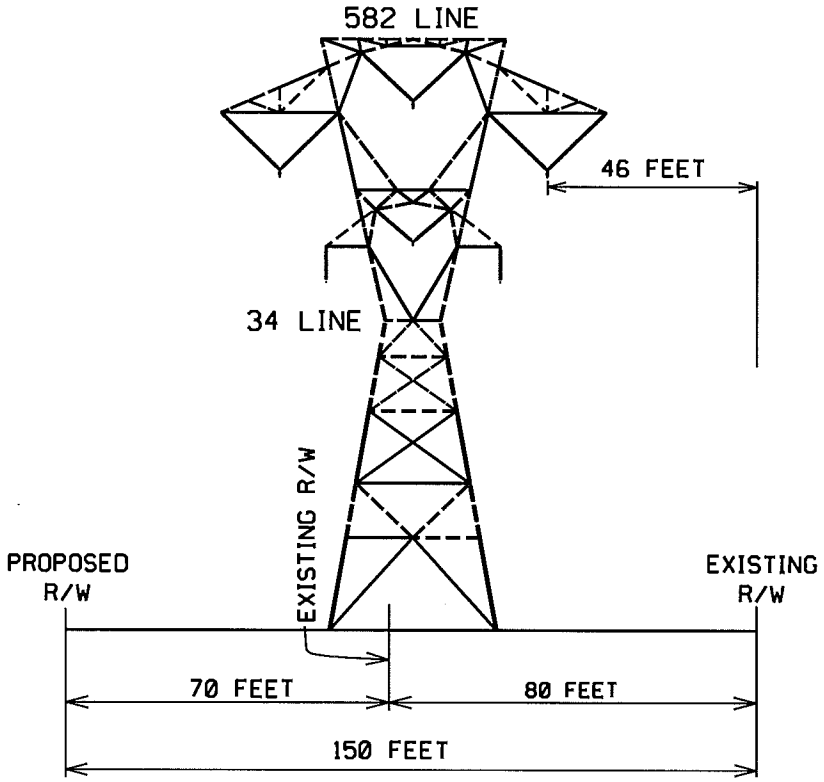


Proposed Tower Structures

582/41 thru 582/44

Terrestrial Crossing

$DGNSPEC$

# Skiffes Creek - Whealton 230 kV Transmission Line

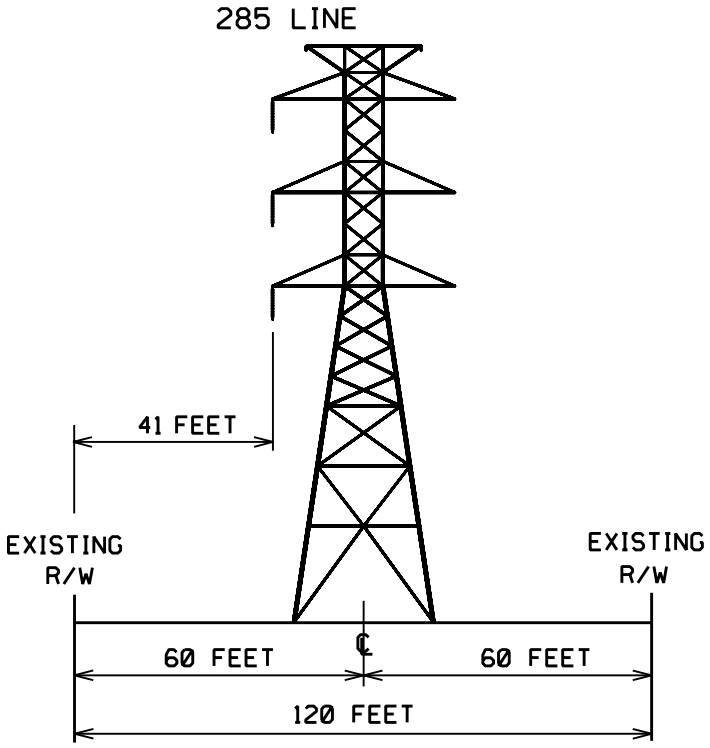


Existing Structures
285/421 thru 285/426

## TYPICAL RIGHT OF WAY LOOKING TOWARD WHEALTON

| | |
|---|---|
| TYPE OF STRUCTURE : | WEATHERING TOWER |
| FOUNDATION : | EXISTING |
| APPROX. AVERAGE HEIGHT : | 120 FEET |
| WIDTH AT CROSSARM : | 39 FEET |
| WIDTH AT BASE : | 30 FEET |
| AVERAGE SPAN LENGTH : | 824 FEET |
| CONDUCTOR TYPE : | ALUMINUM |
| RIGHT-OF-WAY WIDTH : | 120 FEET |
| APPROXIMATE LENGTH: | 1.18 MILES |



$DGNSPEC$

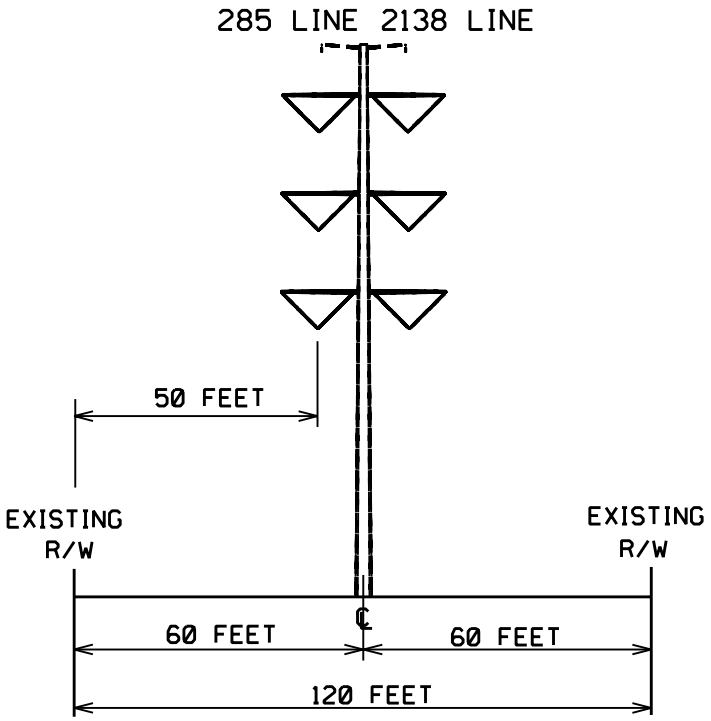


## PROPOSED CONFIGURATION

## TYPICAL RIGHT OF WAY LOOKING TOWARD WHEALTON

| | |
|---|---|
| TYPE OF STRUCTURE : | WEATHERING POLE |
| FOUNDATION : | PILES/CONCRETE |
| APPROX. AVERAGE HEIGHT : | 115 FEET |
| WIDTH AT CROSSARM : | 35 FEET |
| WIDTH AT BASE : | 5 FEET |
| AVERAGE SPAN LENGTH : | 850 FEET |
| CONDUCTOR TYPE : | ALUMINUM |
| RIGHT-OF-WAY WIDTH : | 120 FEET |
| APPROXIMATE LENGTH: | 1.18 MILES |



$DGNSPEC$

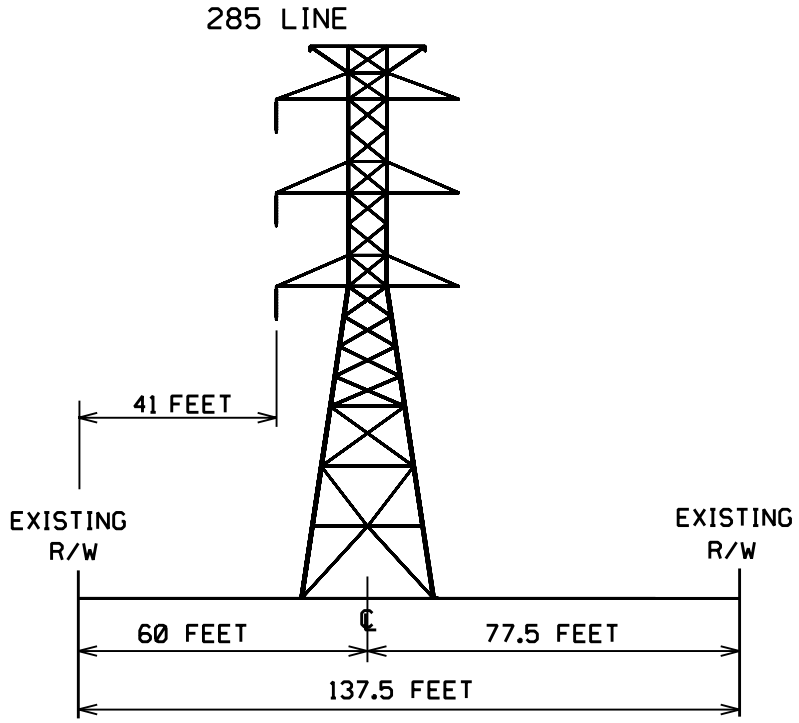


Existing Structures
285/427 thru 285/431

## TYPICAL RIGHT OF WAY LOOKING TOWARD WHEALTON

| | |
|---|---|
| TYPE OF STRUCTURE : | WEATHERING TOWER |
| FOUNDATION : | EXISTING |
| APPROX. AVERAGE HEIGHT : | 115 FEET |
| WIDTH AT CROSSARM : | 39 FEET |
| WIDTH AT BASE : | 28 FEET |
| AVERAGE SPAN LENGTH : | 857 FEET |
| CONDUCTOR TYPE : | ALUMINUM |
| RIGHT-OF-WAY WIDTH : | 137.5 FEET |
| APPROXIMATE LENGTH: | 0.82 MILES |

$DGNSPEC$

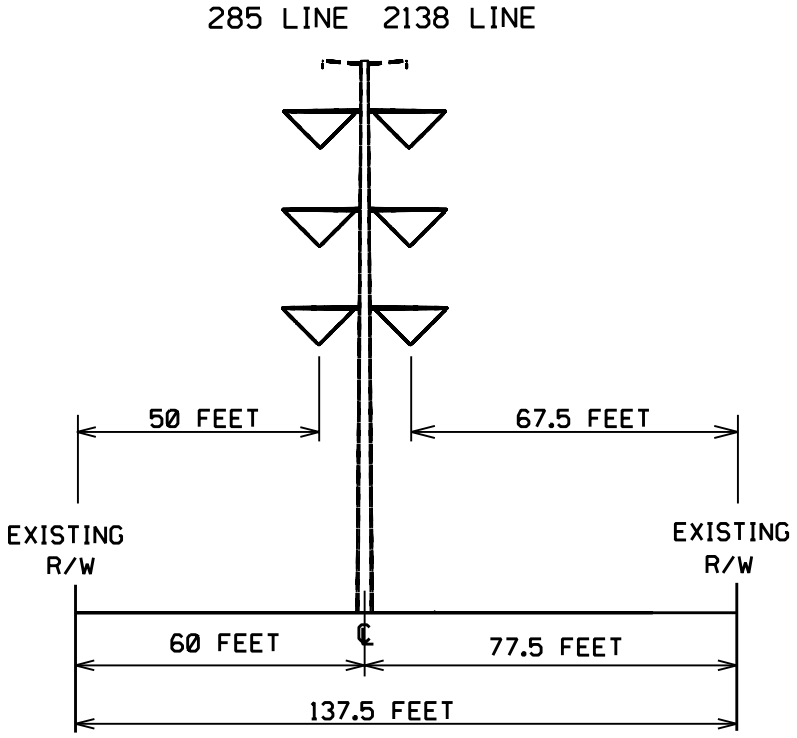


## PROPOSED CONFIGURATION

## TYPICAL RIGHT OF WAY LOOKING TOWARD WHEALTON

| | |
|---|---|
| TYPE OF STRUCTURE : | WEATHERING POLE |
| FOUNDATION : | PILES/CONCRETE |
| APPROX. AVERAGE HEIGHT : | 115 FEET |
| WIDTH AT CROSSARM : | 35 FEET |
| WIDTH AT BASE : | 5 FEET |
| AVERAGE SPAN LENGTH : | 850 FEET |
| CONDUCTOR TYPE : | ALUMINUM |
| RIGHT-OF-WAY WIDTH : | 137.5 FEET |
| APPROXIMATE LENGTH: | 0.82 MILES |

$DGNSPEC$

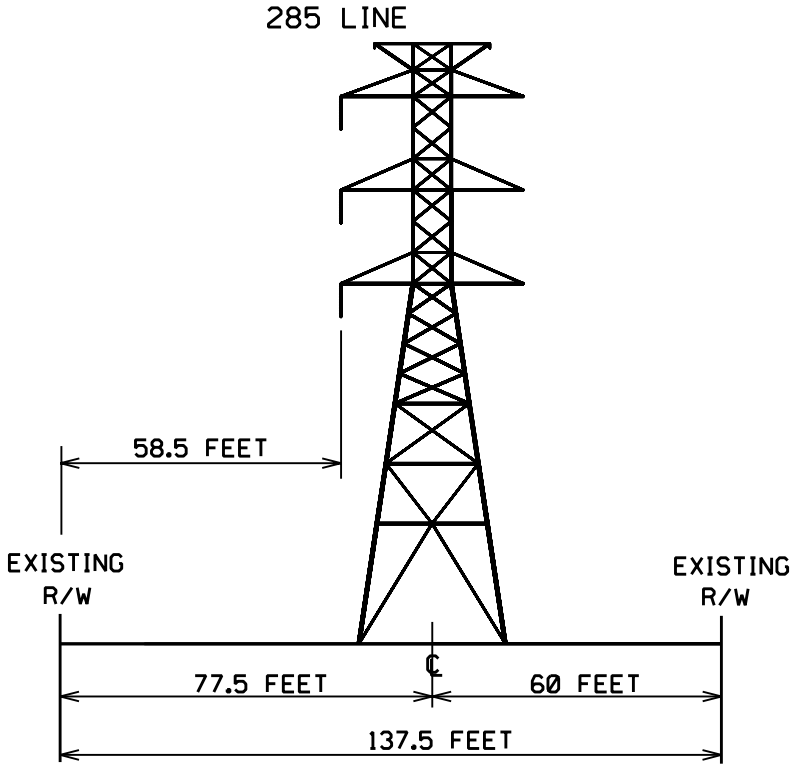


Existing Structures
285/432 thru 285/434

## TYPICAL RIGHT OF WAY LOOKING TOWARD WHEALTON

| | |
|---|---|
| TYPE OF STRUCTURE : | WEATHERING TOWER |
| FOUNDATION : | EXISTING |
| APPROX. AVERAGE HEIGHT : | 125 FEET |
| WIDTH AT CROSSARM : | 39 FEET |
| WIDTH AT BASE : | 31 FEET |
| AVERAGE SPAN LENGTH : | 1030 FEET |
| CONDUCTOR TYPE : | ALUMINUM |
| RIGHT-OF-WAY WIDTH : | 137.5 FEET |
| APPROXIMATE LENGTH: | 0.60 MILES |

$DGNSPEC$

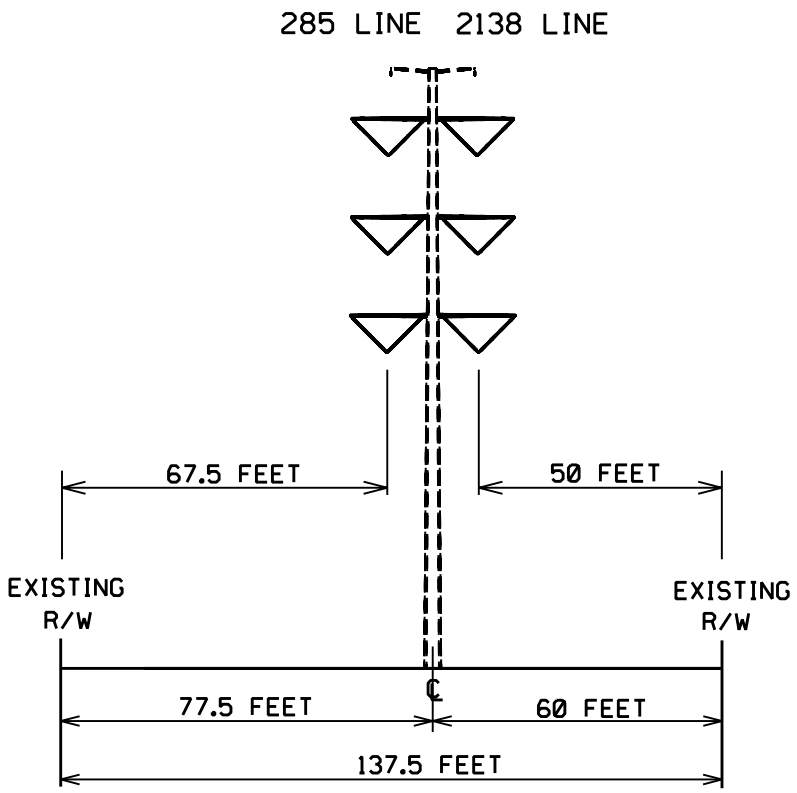


## PROPOSED CONFIGURATION

## TYPICAL RIGHT OF WAY LOOKING TOWARD WHEALTON

| | |
|---|---|
| TYPE OF STRUCTURE : | WEATHERING POLE |
| FOUNDATION : | PILES/CONCRETE |
| APPROX. AVERAGE HEIGHT : | 125 FEET |
| WIDTH AT CROSSARM : | 35 FEET |
| WIDTH AT BASE : | 5 FEET |
| AVERAGE SPAN LENGTH : | 1000 FEET |
| CONDUCTOR TYPE : | ALUMINUM |
| RIGHT-OF-WAY WIDTH : | 137.5 FEET |
| APPROXIMATE LENGTH: | 0.60 MILES |

$DGNSPEC$

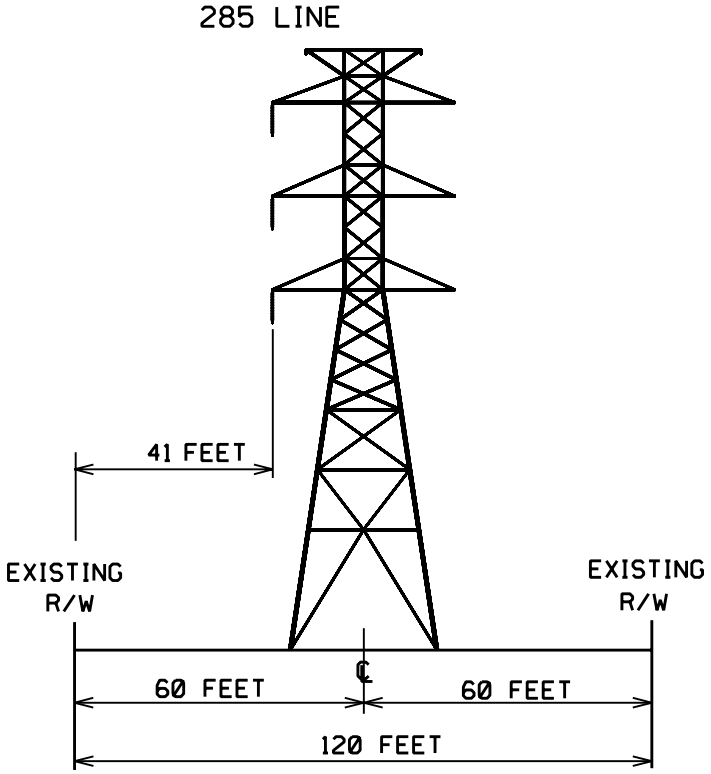


Existing Structures
285/435 thru 285/436

## TYPICAL RIGHT OF WAY LOOKING TOWARD WHEALTON

| | |
|---|---|
| TYPE OF STRUCTURE : | WEATHERING TOWER |
| FOUNDATION : | EXISTING |
| APPROX. AVERAGE HEIGHT : | 125 FEET |
| WIDTH AT CROSSARM : | 39 FEET |
| WIDTH AT BASE : | 31 FEET |
| AVERAGE SPAN LENGTH : | 982 FEET |
| CONDUCTOR TYPE : | ALUMINUM |
| RIGHT-OF-WAY WIDTH : | 120 FEET |
| APPROXIMATE LENGTH: | 0.35 MILES |



$DGNSPEC$

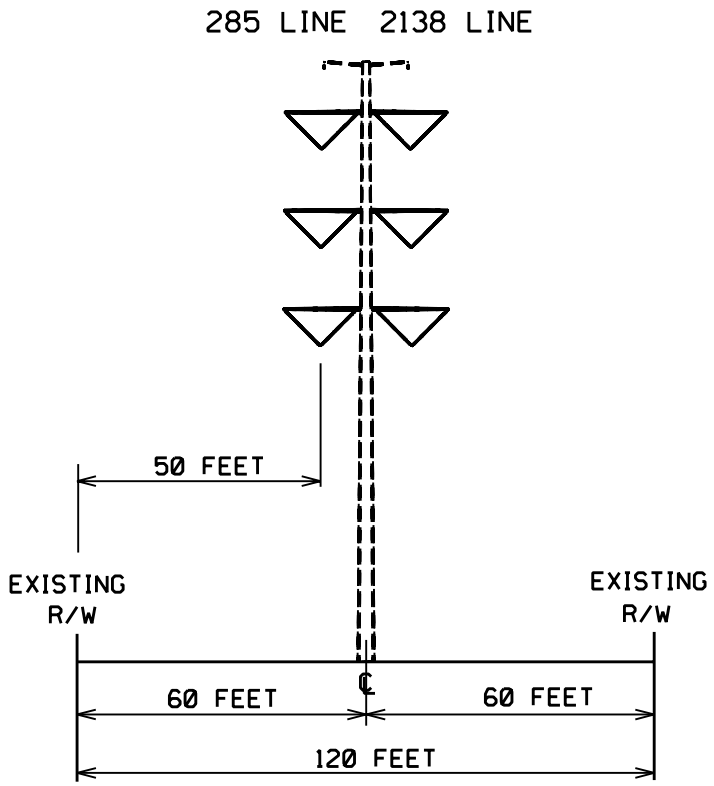


## PROPOSED CONFIGURATION

## TYPICAL RIGHT OF WAY LOOKING TOWARD WHEALTON

| | |
|---|---|
| TYPE OF STRUCTURE : | WEATHERING POLE |
| FOUNDATION : | PILES/CONCRETE |
| APPROX. AVERAGE HEIGHT : | 125 FEET |
| WIDTH AT CROSSARM : | 35 FEET |
| WIDTH AT BASE : | 5 FEET |
| AVERAGE SPAN LENGTH : | 1000 FEET |
| CONDUCTOR TYPE : | ALUMINUM |
| RIGHT-OF-WAY WIDTH : | 120 FEET |
| APPROXIMATE LENGTH: | 0.35 MILES |

$DGNSPEC$

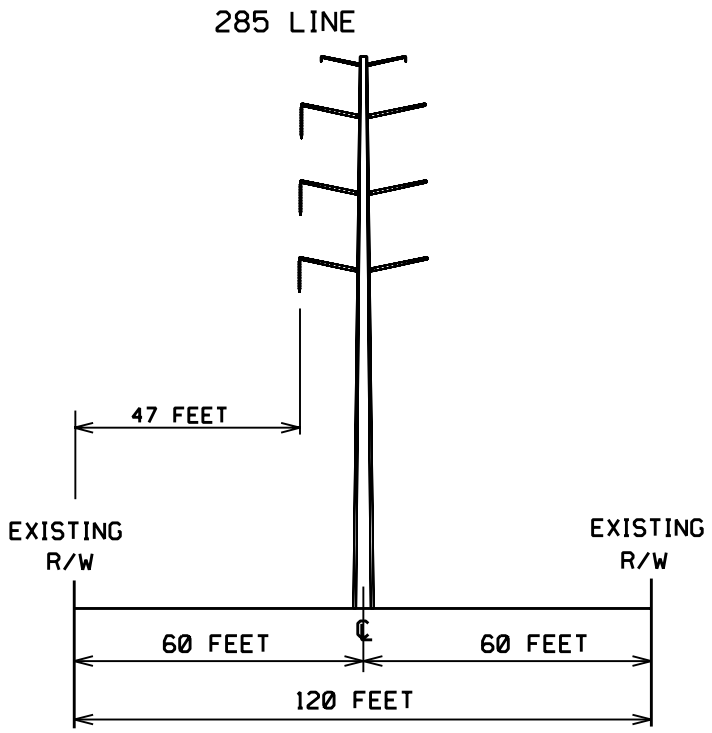


Existing Structures
285/437 thru 285/458

## TYPICAL RIGHT OF WAY LOOKING TOWARD WHEALTON

| | |
|---|---|
| TYPE OF STRUCTURE : | PAINTED POLE |
| FOUNDATION : | EXISTING |
| APPROX. AVERAGE HEIGHT : | 115 FEET |
| WIDTH AT CROSSARM : | 27 FEET |
| WIDTH AT BASE : | 5 FEET |
| AVERAGE SPAN LENGTH : | 1015 FEET |
| CONDUCTOR TYPE : | ALUMINUM |
| RIGHT-OF-WAY WIDTH : | 120 FEET |
| APPROXIMATE LENGTH: | 3.65 MILES |

$DGNSPEC$

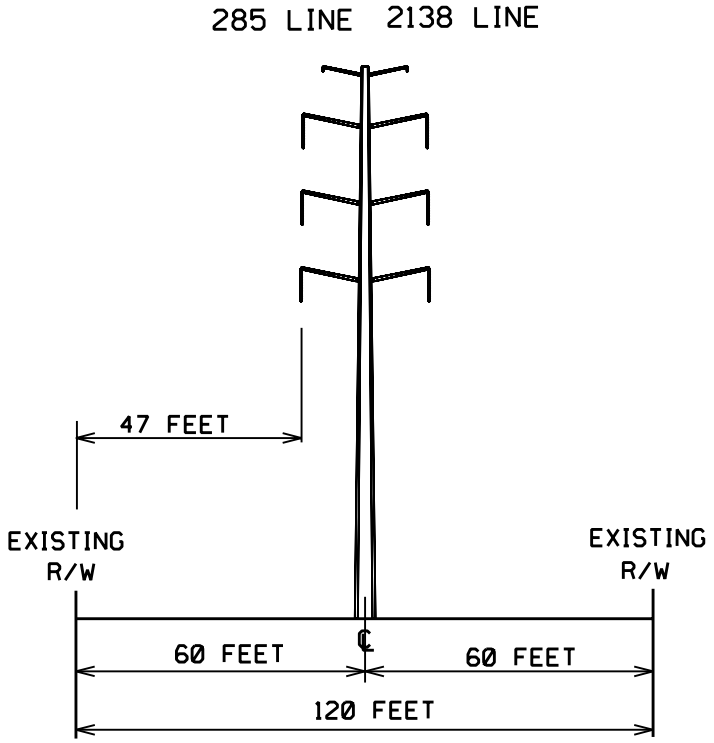


## PROPOSED CONFIGURATION

## TYPICAL RIGHT OF WAY LOOKING TOWARD WHEALTON

| | |
|---|---|
| TYPE OF STRUCTURE : | PAINTED POLE |
| FOUNDATION : | EXISTING |
| APPROX. AVERAGE HEIGHT : | 115 FEET |
| WIDTH AT CROSSARM : | 27 FEET |
| WIDTH AT BASE : | 5 FEET |
| AVERAGE SPAN LENGTH : | 1015 FEET |
| CONDUCTOR TYPE : | ALUMINUM |
| RIGHT-OF-WAY WIDTH : | 120 FEET |
| APPROXIMATE LENGTH: | 3.65 MILES |

$DGNSPEC$

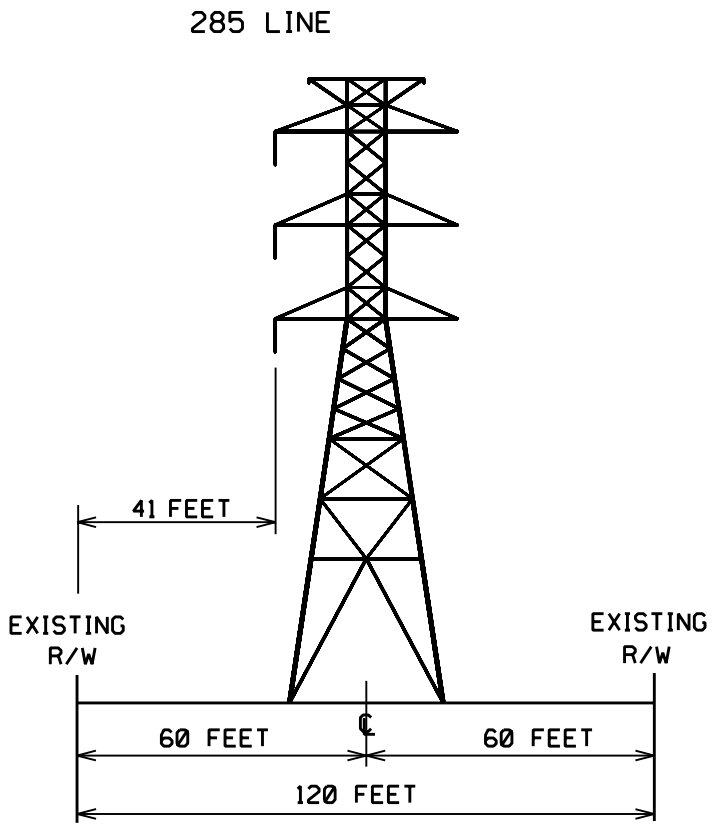


Existing Structures
285/459 thru 285/463 and 209/547

## TYPICAL RIGHT OF WAY LOOKING TOWARD WHEALTON

| | |
|---|---|
| TYPE OF STRUCTURE : | WEATHERING TOWER |
| FOUNDATION : | EXISTING |
| APPROX. AVERAGE HEIGHT : | 130 FEET |
| WIDTH AT CROSSARM : | 39 FEET |
| WIDTH AT BASE : | 33 FEET |
| AVERAGE SPAN LENGTH : | 1006 FEET |
| CONDUCTOR TYPE : | ALUMINUM |
| RIGHT-OF-WAY WIDTH : | 120 FEET |
| APPROXIMATE LENGTH: | 0.95 MILES |

$DGNSPEC$

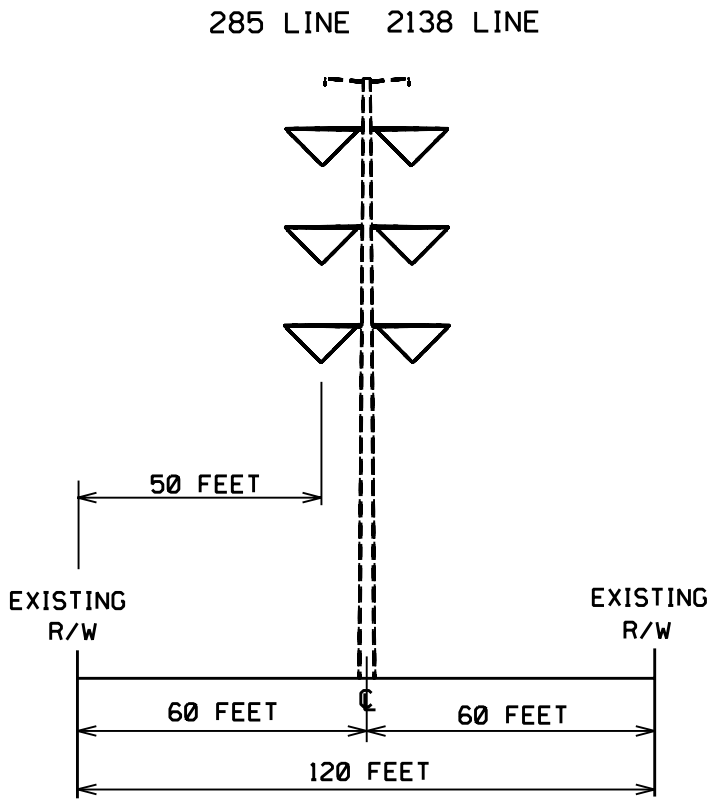


## PROPOSED CONFIGURATION

## TYPICAL RIGHT OF WAY LOOKING TOWARD WHEALTON

| | |
|---|---|
| TYPE OF STRUCTURE : | WEATHERING POLE |
| FOUNDATION : | PILES/CONCRETE |
| APPROX. AVERAGE HEIGHT : | 125 FEET |
| WIDTH AT CROSSARM : | 35 FEET |
| WIDTH AT BASE : | 5 FEET |
| AVERAGE SPAN LENGTH : | 1000 FEET |
| CONDUCTOR TYPE : | ALUMINUM |
| RIGHT-OF-WAY WIDTH : | 120 FEET |
| APPROXIMATE LENGTH: | 0.95 MILES |

$DGNSPEC$

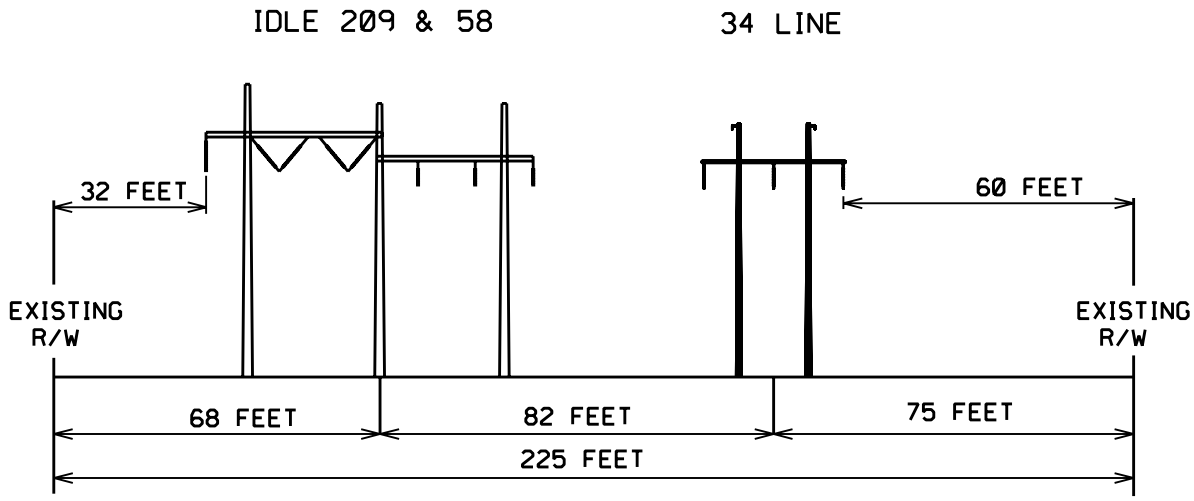


Existing Structure
58/275 thru 58/282

## TYPICAL RIGHT OF WAY LOOKING TOWARD WHEALTON

| | | |
|---|---|---|
| TYPE OF STRUCTURE: | 3 POLE WOOD | H FRAME WOOD |
| FOUNDATION : | DIRECT BURIED | DIRECT BURIED |
| APPROXIMATE HEIGHT: | 61 FEET | 52 FEET |
| WIDTH AT CROSSARM: | 68 FEET | 30 FEET |
| WIDTH AT BASE: | 53 FEET | 14 FEET |
| AVERAGE SPAN LENGTH: | 568 FEET | 535 FEET |
| CONDUCTOR TYPE: | ALUMINUM | COPPER |
| RIGHT OF WAY WIDTH: | 225 FEET | 225 FEET |
| APPROXIMATE LENGTH: | 0.81 MILES | 0.81 MILES |



$DGNSPEC$

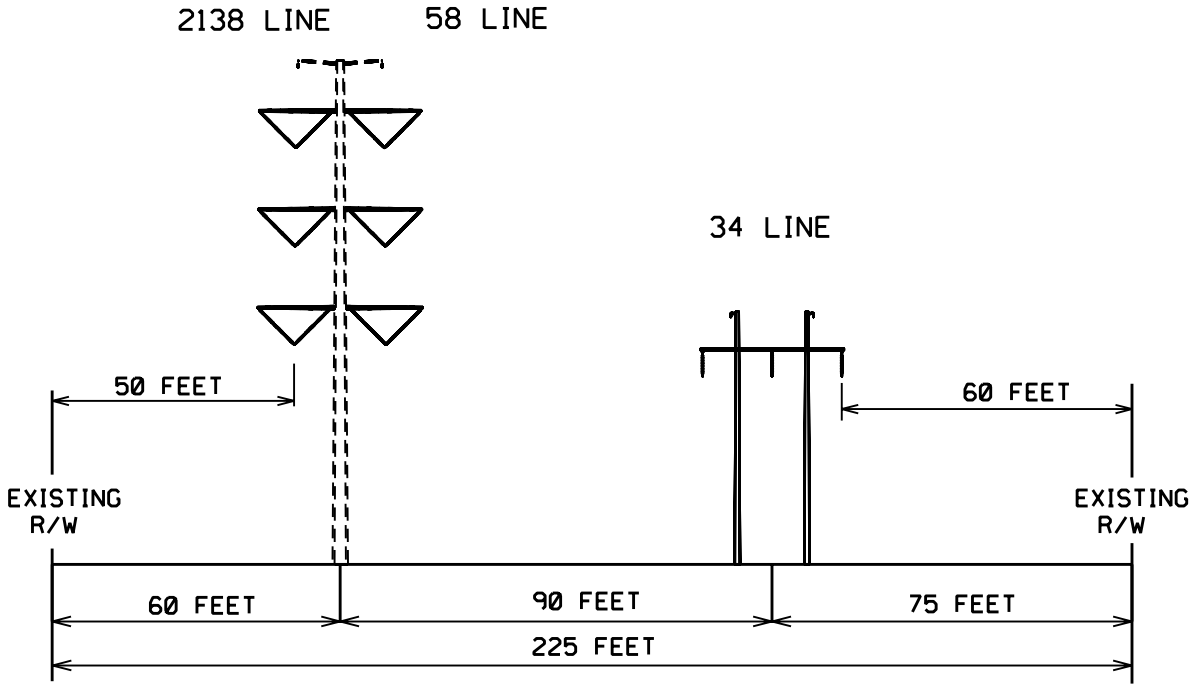


## PROPOSED CONFIGURATION

## TYPICAL RIGHT OF WAY LOOKING TOWARD WHEALTON

| | | |
|---|---|---|
| TYPE OF STRUCTURE: | WEATHERING POLE | H FRAME WOOD |
| FOUNDATION : | PILES/CONCRETE | DIRECT BURIED |
| APPROXIMATE HEIGHT: | 105 FEET | 52 FEET |
| WIDTH AT CROSSARM: | 35 FEET | 30 FEET |
| WIDTH AT BASE: | 5 FEET | 14 FEET |
| AVERAGE SPAN LENGTH: | 600 FEET | 535 FEET |
| CONDUCTOR TYPE: | ALUMINUM | COPPER |
| RIGHT OF WAY WIDTH: | 225 FEET | 225 FEET |
| APPROXIMATE LENGTH: | 0.81 MILES | 0.81 MILES |

$DGNSPEC$

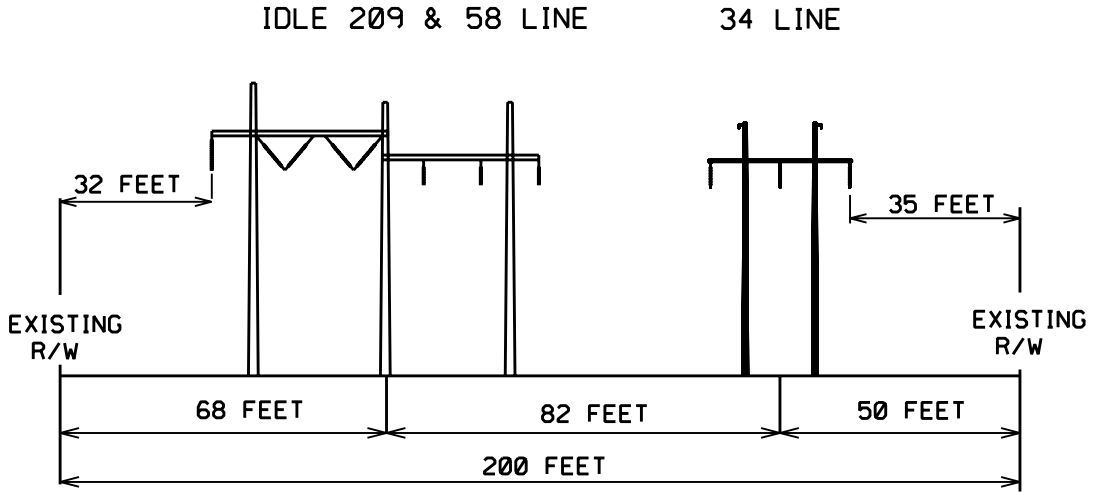


Existing Structures
58/283 thru 58/289

## TYPICAL RIGHT OF WAY LOOKING TOWARD WHEALTON

| | | |
|---|---|---|
| TYPE OF STRUCTURE: | 3 POLE WOOD | H FRAME WOOD |
| FOUNDATION : | DIRECT BURIED | DIRECT BURIED |
| APPROXIMATE HEIGHT: | 61 FEET | 52 FEET |
| WIDTH AT CROSSARM: | 68 FEET | 30 FEET |
| WIDTH AT BASE: | 53 FEET | 14 FEET |
| AVERAGE SPAN LENGTH: | 589 FEET | 505 FEET |
| CONDUCTOR TYPE: | ALUMINUM | ALUMINUM |
| RIGHT OF WAY WIDTH: | 200 FEET | 200 FEET |
| APPROXIMATE LENGTH: | 0.56 MILES | 0.56 MILES |

$DGNSPEC$

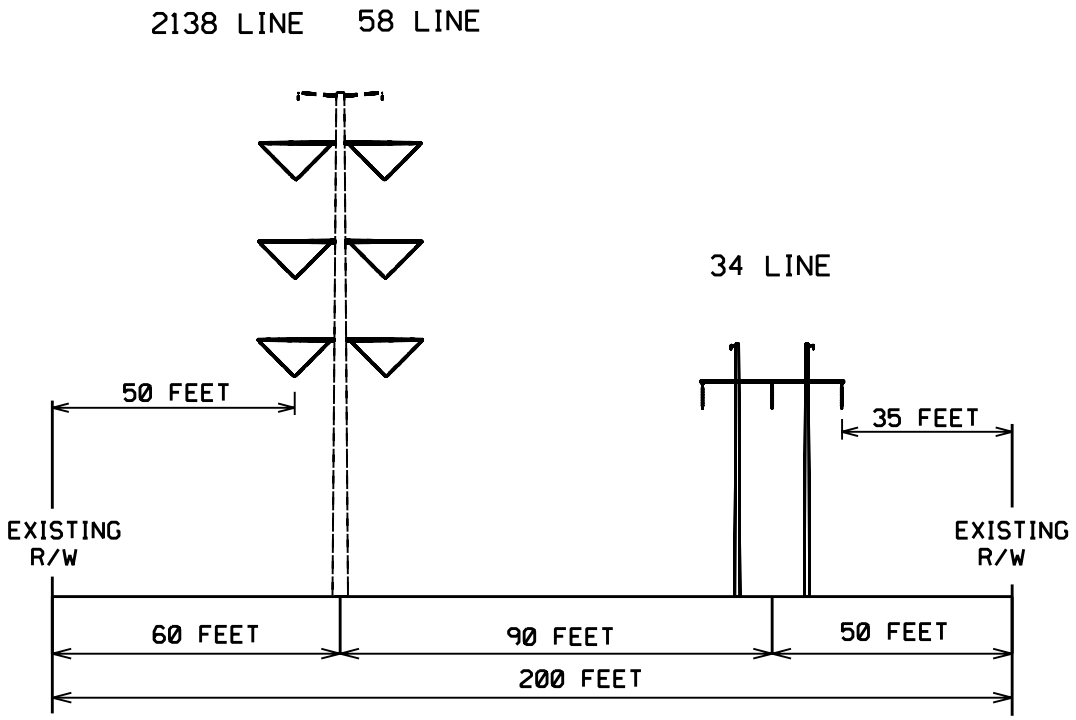


## PROPOSED CONFIGURATION

## TYPICAL RIGHT OF WAY LOOKING TOWARD WHEALTON

| | | |
|---|---|---|
| TYPE OF STRUCTURE: | WEATHERING POLE | H FRAME WOOD |
| FOUNDATION : | PILES CONCRETE | DIRECT BURIED |
| APPROXIMATE HEIGHT: | 105 FEET | 52 FEET |
| WIDTH AT CROSSARM: | 35 FEET | 30 FEET |
| WIDTH AT BASE: | 5 FEET | 14 FEET |
| AVERAGE SPAN LENGTH: | 625 FEET | 505 FEET |
| CONDUCTOR TYPE: | ALUMINUM | COPPER |
| RIGHT OF WAY WIDTH: | 200 FEET | 200 FEET |
| APPROXIMATE LENGTH: | 0.56 MILES | 0.56 MILES |

$DGNSPEC$

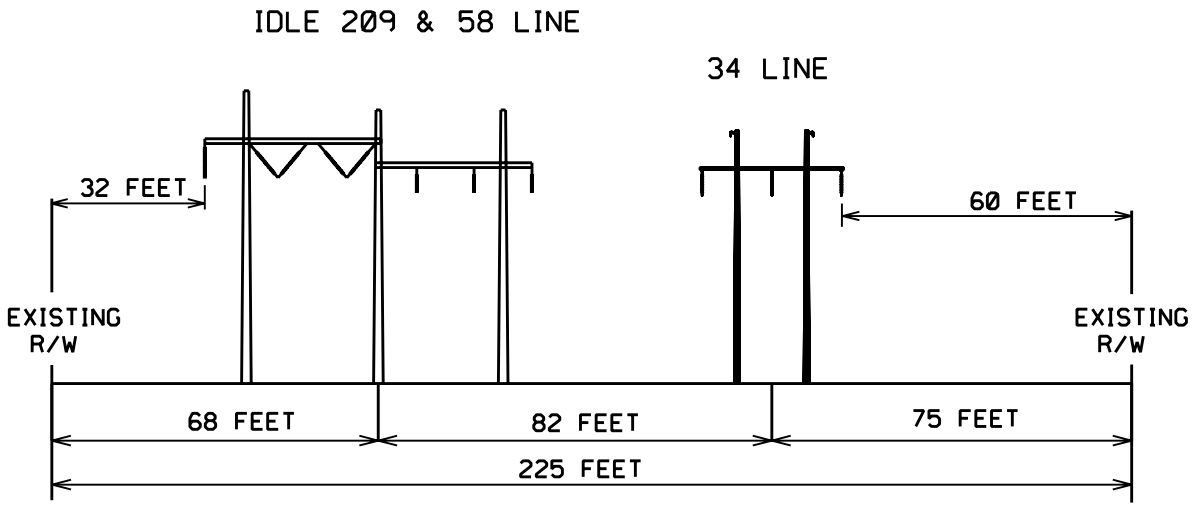


Existing Structures
58/290 thru 58/293
(209/563 thru 209/564)

## TYPICAL RIGHT OF WAY LOOKING TOWARD WHEALTON

| | | |
|---|---|---|
| TYPE OF STRUCTURE: | 3 POLE WOOD | H FRAME WOOD |
| FOUNDATION : | DIRECT BURIED | DIRECT BURIED |
| APPROXIMATE HEIGHT: | 61 FEET | 52 FEET |
| WIDTH AT CROSSARM: | 68 FEET | 30 FEET |
| WIDTH AT BASE: | 53 FEET | 14 FEET |
| AVERAGE SPAN LENGTH: | 519 FEET | 792 FEET |
| CONDUCTOR TYPE: | ALUMINUM | COPPER |
| RIGHT OF WAY WIDTH: | 225 FEET | 225 FEET |
| APPROXIMATE LENGTH: | 0.32 MILES | 0.32 MILES |

$DGNSPEC$

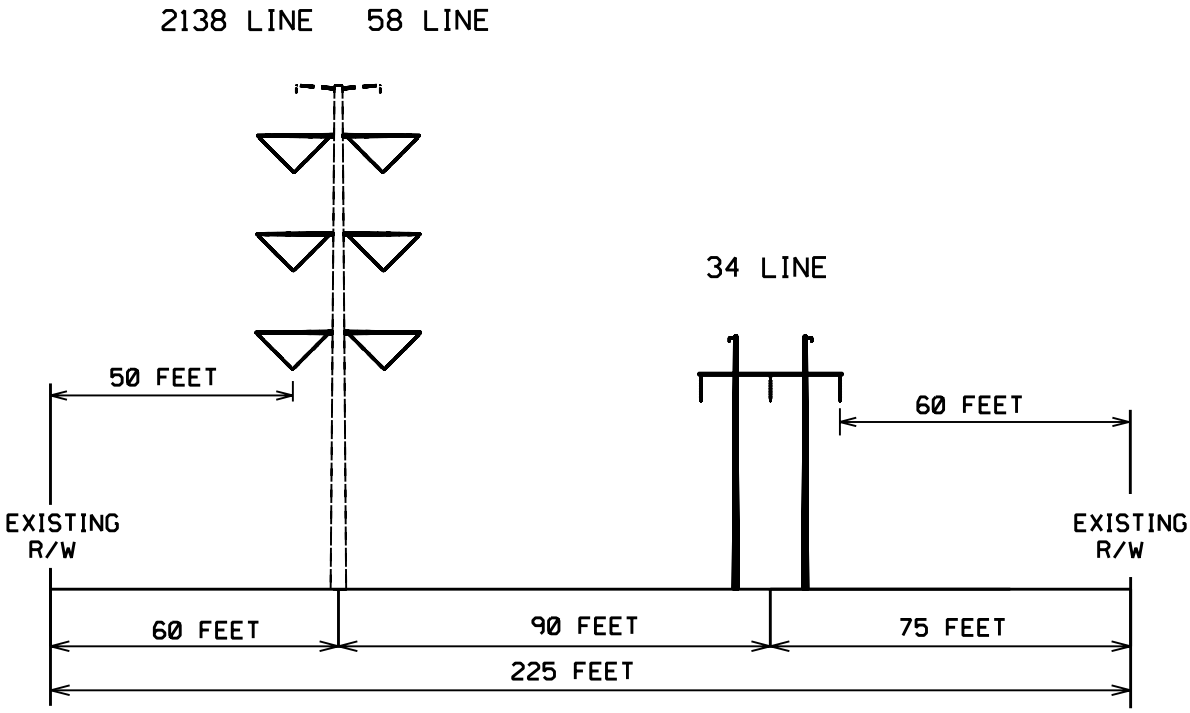


## PROPOSED CONFIGURATION

## TYPICAL RIGHT OF WAY LOOKING TOWARD WHEALTON

| | | |
|---|---|---|
| TYPE OF STRUCTURE: | WEATHERING POLE | H FRAME WOOD |
| FOUNDATION : | PILES/CONCRETE | DIRECT BURIED |
| APPROXIMATE HEIGHT: | 105 FEET | 52 FEET |
| WIDTH AT CROSSARM: | 35 FEET | 30 FEET |
| WIDTH AT BASE: | 5 FEET | 14 FEET |
| AVERAGE SPAN LENGTH: | 625 FEET | 792 FEET |
| CONDUCTOR TYPE: | ALUMINUM | COPPER |
| RIGHT OF WAY WIDTH: | 225 FEET | 225 FEET |
| APPROXIMATE LENGTH: | 0.32 MILES | 0.32 MILES |

$DGNSPEC$

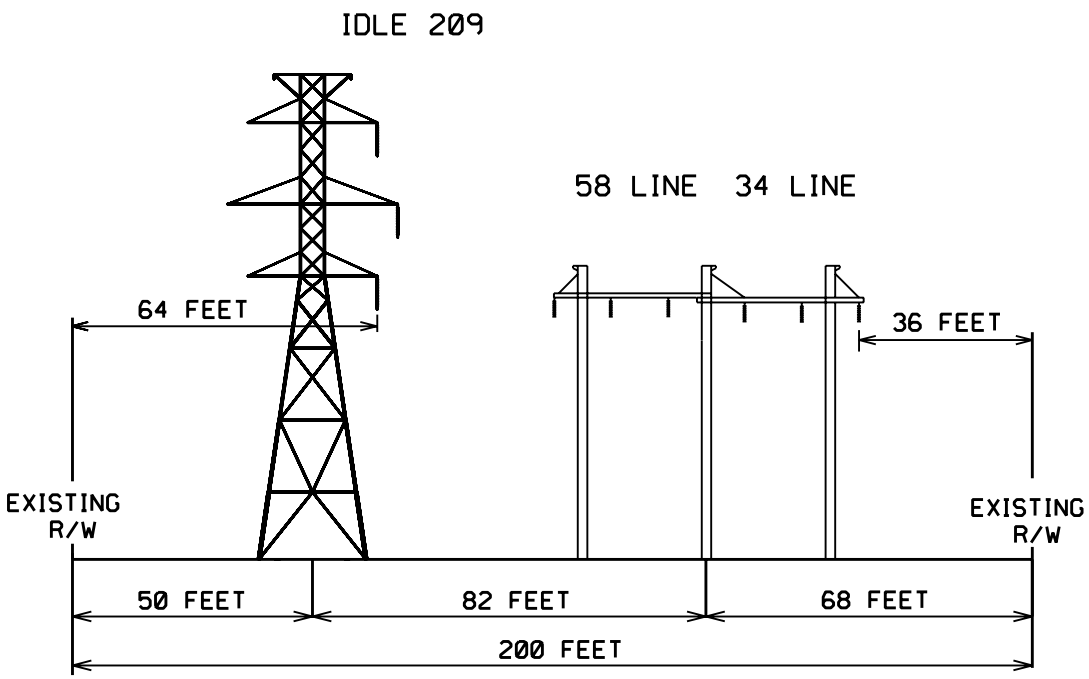


Existing Structures
209/565 thru 209/567

## TYPICAL RIGHT OF WAY LOOKING TOWARD WHEALTON

| | | |
|---|---|---|
| TYPE OF STRUCTURE: | WEATHERING TOWER | 3 POLE WOOD |
| FOUNDATION : | EXISTING | DIRECT BURIED |
| APPROXIMATE HEIGHT: | 100 FEET | 61 FEET |
| WIDTH AT CROSSARM: | 36 FEET | 65 FEET |
| WIDTH AT BASE: | 24 FEET | 52 FEET |
| AVERAGE SPAN LENGTH: | 653 FEET | 572 FEET |
| CONDUCTOR TYPE: | ALUMINUM | ALUMINUM<br>COPPER |
| RIGHT OF WAY WIDTH: | 200 FEET | 200 FEET |
| APPROXIMATE LENGTH: | 0.25 MILES | 0.25 MILES |

$DGNSPEC$

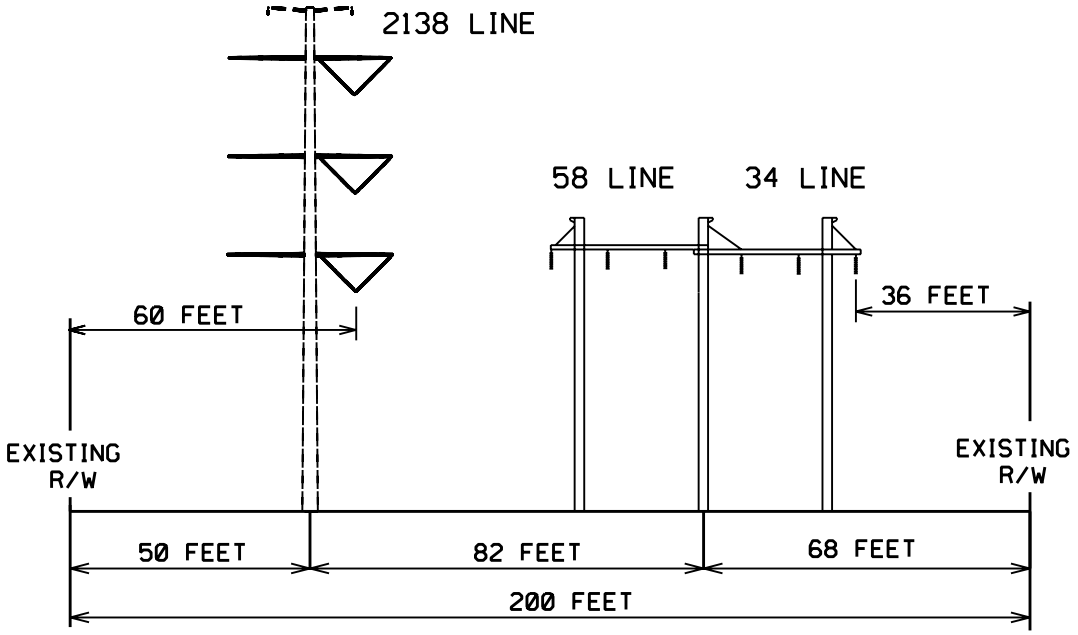


## PROPOSED CONFIGURATION

## TYPICAL RIGHT OF WAY LOOKING TOWARD WHEALTON

| | | |
|---|---|---|
| TYPE OF STRUCTURE: | WEATHERING POLE | 3 POLE WOOD |
| FOUNDATION : | PILES/CONCRETE | DIRECT BURIED |
| APPROXIMATE HEIGHT: | 105 FEET | 61 FEET |
| WIDTH AT CROSSARM: | 35 FEET | 65 FEET |
| WIDTH AT BASE: | 5 FEET | 52 FEET |
| AVERAGE SPAN LENGTH: | 625 FEET | 572 FEET |
| CONDUCTOR TYPE: | ALUMINUM | ALUMINUM<br>COPPER |
| RIGHT OF WAY WIDTH: | 200 FEET | 200 FEET |
| APPROXIMATE LENGTH: | 0.25 MILES | 0.25 MILES |

$DGNSPEC$

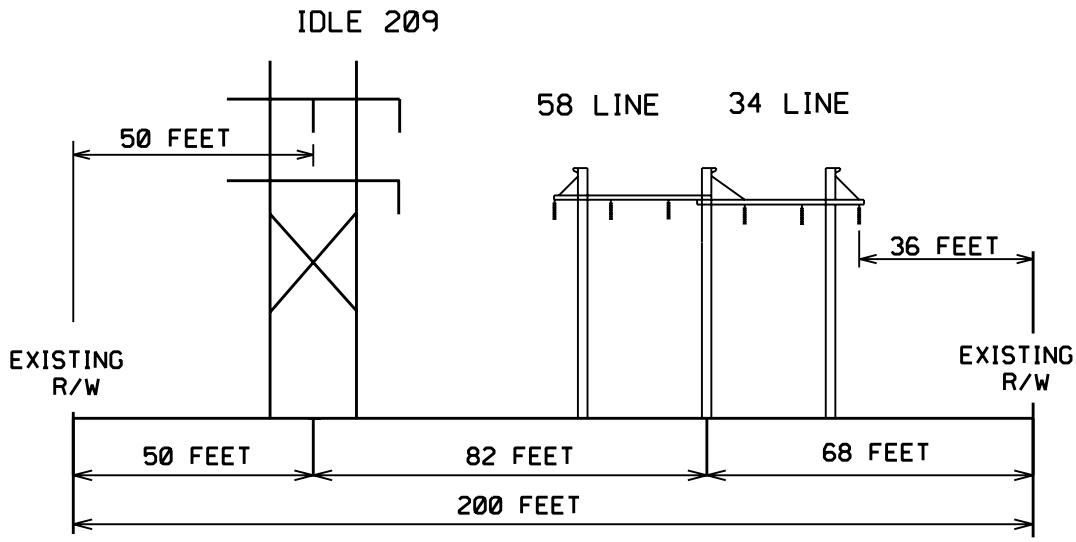


Existing Structures
209/568 thru 209/571

## TYPICAL RIGHT OF WAY LOOKING TOWARD WHEALTON

| | | |
|---|---|---|
| TYPE OF STRUCTURE: | H FRAME | 3 POLE WOOD |
| FOUNDATION : | DIRECT BURIED | DIRECT BURIED |
| APPROXIMATE HEIGHT: | 75 FEET | 52 FEET |
| WIDTH AT CROSSARM: | 38 FEET | 65 FEET |
| WIDTH AT BASE: | 18 FEET | 52 FEET |
| AVERAGE SPAN LENGTH: | 547 FEET | 581 FEET |
| CONDUCTOR TYPE: | ALUMINUM | ALUMINUM<br>COPPER |
| RIGHT OF WAY WIDTH: | 200 FEET | 200 FEET |
| APPROXIMATE LENGTH: | 0.51 MILES | 0.51 MILES |

$DGNSPEC$

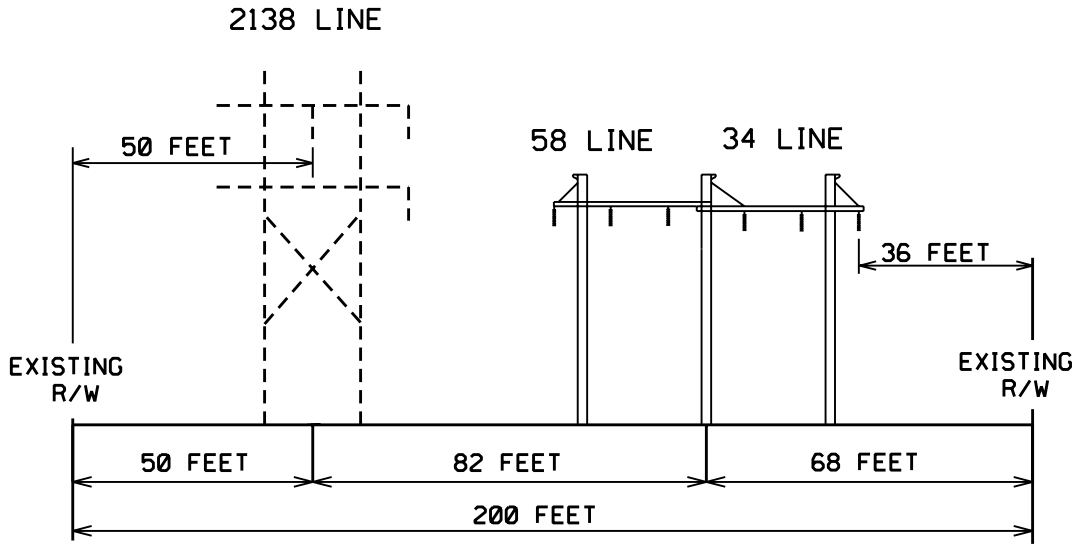


## PROPOSED CONFIGURATION

## TYPICAL RIGHT OF WAY LOOKING TOWARD WHEALTON

| | | |
|---|---|---|
| TYPE OF STRUCTURE: | WEATHERING H-FRAME | 3 POLE WOOD |
| FOUNDATION : | PILES/CONCRETE | DIRECT BURIED |
| APPROXIMATE HEIGHT: | 75 FEET | 52 FEET |
| WIDTH AT CROSSARM: | 40 FEET | 65 FEET |
| WIDTH AT BASE: | 20 FEET | 52 FEET |
| AVERAGE SPAN LENGTH: | 550 FEET | 581 FEET |
| CONDUCTOR TYPE: | ALUMINUM | ALUMINUM<br>COPPER |
| RIGHT OF WAY WIDTH: | 200 FEET | 200 FEET |
| APPROXIMATE LENGTH: | 0.51 MILES | 0.51 MILES |

$DGNSPEC$

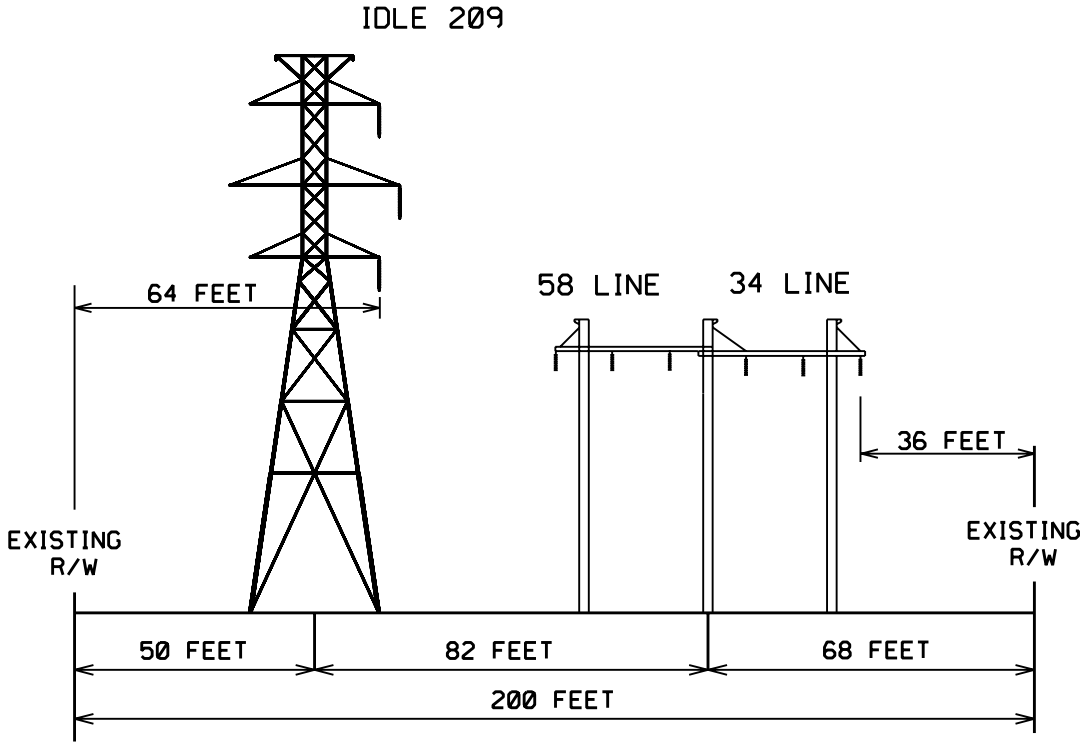


Existing Structures

209/572 thru 209/574 and 292/576 thru 292/578

## TYPICAL RIGHT OF WAY LOOKING TOWARD WHEALTON

| | | |
|---|---|---|
| TYPE OF STRUCTURE: | WEATHERING TOWER | 3 POLE WOOD |
| FOUNDATION : | EXISTING | DIRECT BURIED |
| APPROXIMATE HEIGHT: | 115 FEET | 61 FEET |
| WIDTH AT CROSSARM: | 36 FEET | 65 FEET |
| WIDTH AT BASE: | 27 FEET | 52 FEET |
| AVERAGE SPAN LENGTH: | 906 FEET | 596 FEET |
| CONDUCTOR TYPE: | ALUMINUM | ALUMINUM<br>COPPER |
| RIGHT OF WAY WIDTH: | 200 FEET | 200 FEET |
| APPROXIMATE LENGTH: | 0.70 MILES | 0.70 MILES |

$DGNSPEC$

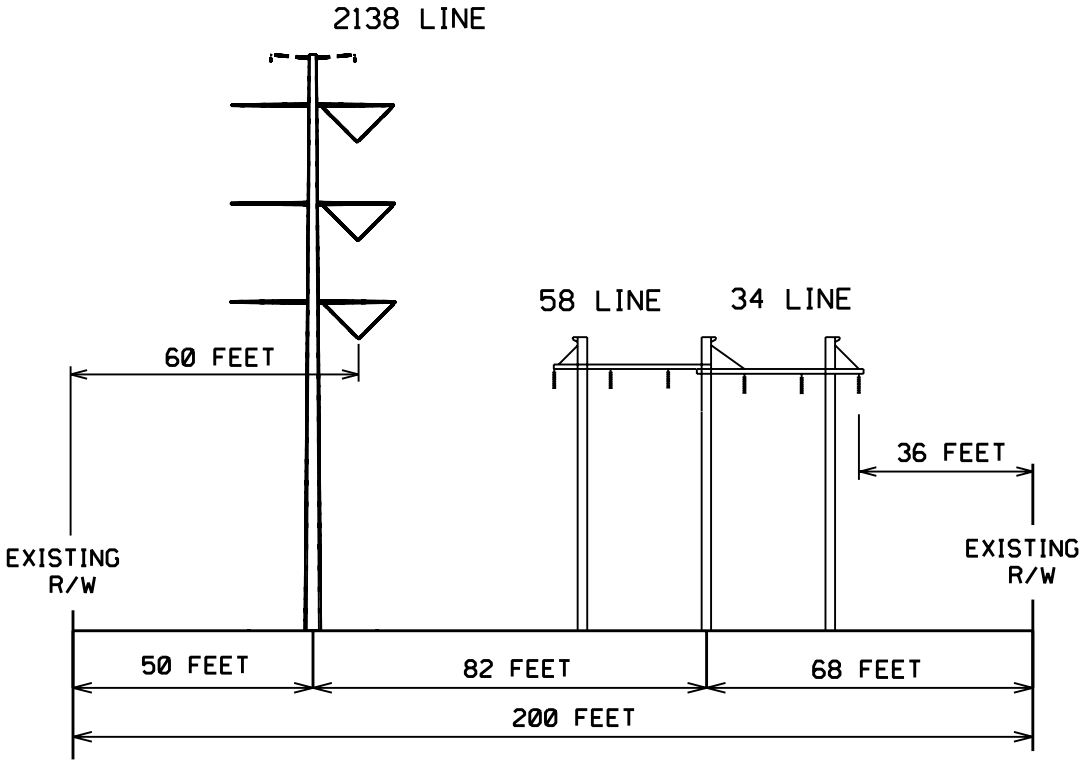


## PROPOSED CONFIGURATION

## TYPICAL RIGHT OF WAY LOOKING TOWARD WHEALTON

| | | |
|---|---|---|
| TYPE OF STRUCTURE: | WEATHERING POLE | 3 POLE WOOD |
| FOUNDATION : | PILES/CONCRETE | DIRECT BURIED |
| APPROXIMATE HEIGHT: | 120 FEET | 61 FEET |
| WIDTH AT CROSSARM: | 35 FEET | 65 FEET |
| WIDTH AT BASE: | 5 FEET | 52 FEET |
| AVERAGE SPAN LENGTH: | 900 FEET | 596 FEET |
| CONDUCTOR TYPE: | ALUMINUM | ALUMINUM<br>COPPER |
| RIGHT OF WAY WIDTH: | 200 FEET | 200 FEET |
| APPROXIMATE LENGTH: | 0.70 MILES | 0.70 MILES |

$DGNSPEC$

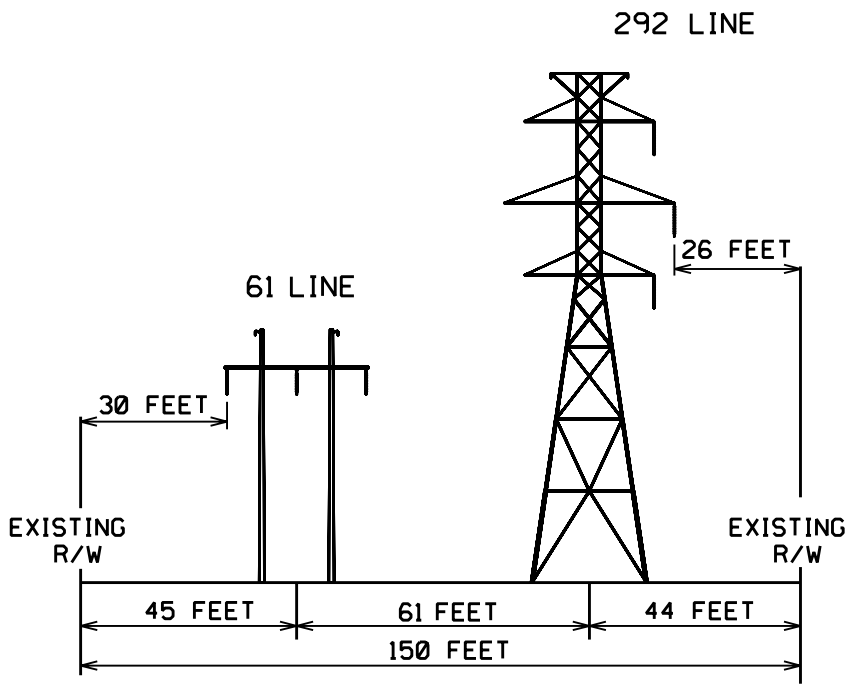


Existing Structures
292/579 thru 292/581

## TYPICAL RIGHT OF WAY LOOKING TOWARD WHEALTON

| | | |
|---|---|---|
| TYPE OF STRUCTURE: | H FRAME WOOD | STEEL TOWER |
| FOUNDATION : | DIRECT BURIED | EXISTING |
| APPROXIMATE HEIGHT: | 52 FEET | 106 FEET |
| WIDTH AT CROSSARM: | 30 FEET | 36 FEET |
| WIDTH AT BASE: | 14 FEET | 25 FEET |
| AVERAGE SPAN LENGTH: | 533 FEET | 515 FEET |
| CONDUCTOR TYPE: | ALUMINUM | ALUMINUM |
| RIGHT OF WAY WIDTH: | 150 FEET | 150 FEET |
| APPROXIMATE LENGTH: | 0.29 MILES | 0.29 MILES |

$DGNSPEC$

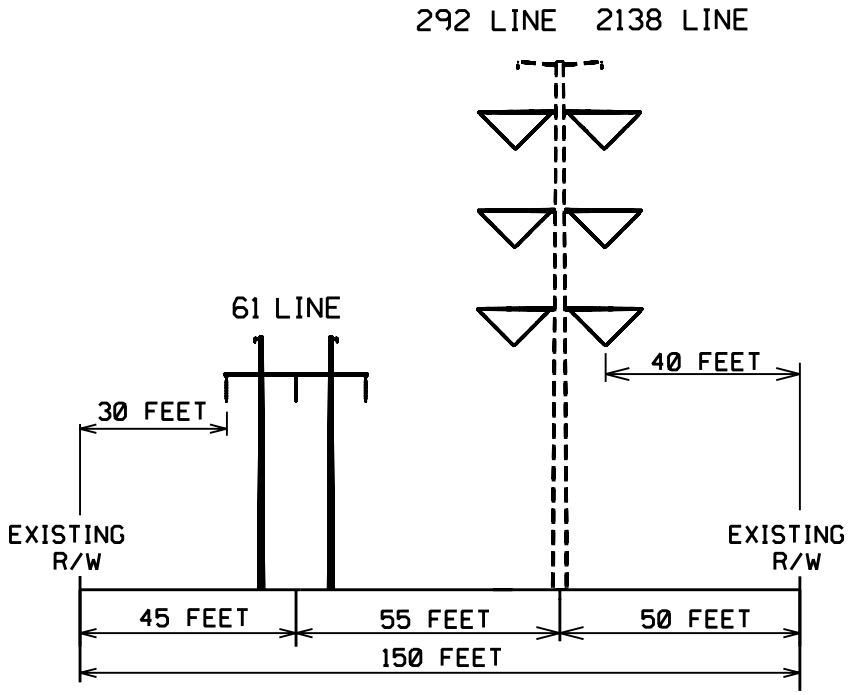


## PROPOSED CONFIGURATION

## TYPICAL RIGHT OF WAY LOOKING TOWARD WHEALTON

| | | |
|---|---|---|
| TYPE OF STRUCTURE: | H FRAME WOOD | WEATHERING POLE |
| FOUNDATION : | DIRECT BURIED | PILES/CONCRETE |
| APPROXIMATE HEIGHT: | 52 FEET | 110 FEET |
| WIDTH AT CROSSARM: | 30 FEET | 35 FEET |
| WIDTH AT BASE: | 14 FEET | 5 FEET |
| AVERAGE SPAN LENGTH: | 533 FEET | 515 FEET |
| CONDUCTOR TYPE: | ALUMINUM | ALUMINUM |
| RIGHT OF WAY WIDTH: | 150 FEET | 150 FEET |
| APPROXIMATE LENGTH: | 0.29 MILES | 0.29 MILES |

$DGNSPEC$

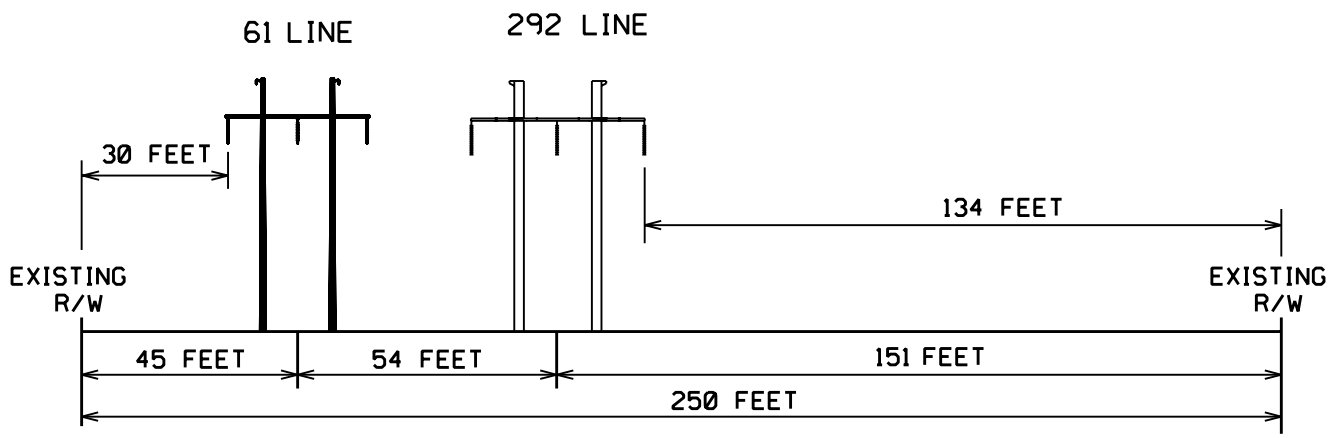


Existing Structures
292/582 thru 292/592

## TYPICAL RIGHT OF WAY LOOKING TOWARD WHEALTON

| | | |
|---|---|---|
| TYPE OF STRUCTURE: | H FRAME WOOD | H FRAME WOOD |
| FOUNDATION : | DIRECT BURIED | DIRECT BURIED |
| APPROXIMATE HEIGHT: | 52 FEET | 52 FEET |
| WIDTH AT CROSSARM: | 30 FEET | 36 FEET |
| WIDTH AT BASE: | 14 FEET | 18 FEET |
| AVERAGE SPAN LENGTH: | 690 FEET | 500 FEET |
| CONDUCTOR TYPE: | ALUMINUM | ALUMINUM |
| RIGHT OF WAY WIDTH: | 250 FEET | 250 FEET |
| APPROXIMATE LENGTH: | 0.93 MILES | 0.93 MILES |



$DGNSPEC$

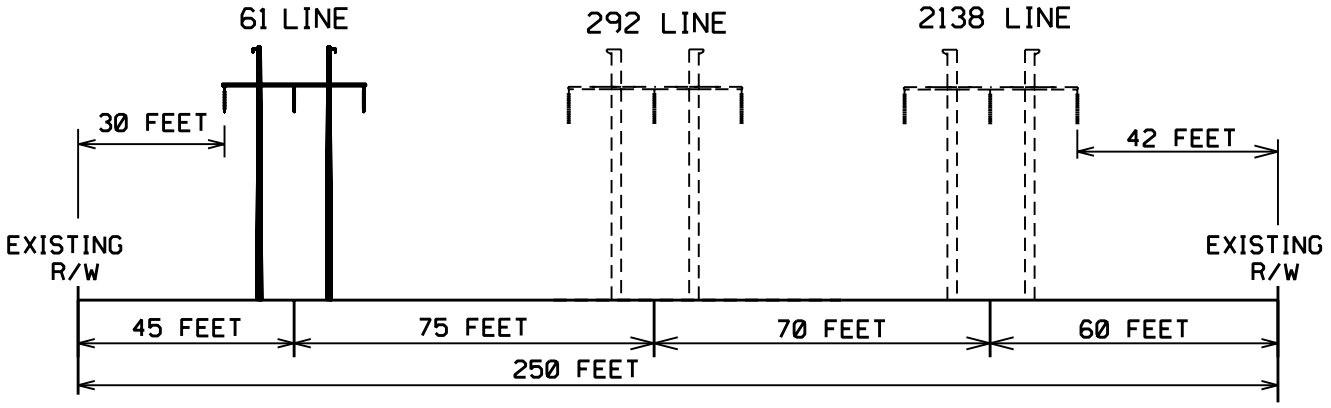


## PROPOSED CONFIGURATION

## TYPICAL RIGHT OF WAY LOOKING TOWARD WHEALTON

| | | | |
|---|---|---|---|
| TYPE OF STRUCTURE: | H FRAME | H FRAME | H FRAME |
| FOUNDATION : | DIRECT BURIED | DIRECT BURIED | DIRECT BURIED |
| APPROXIMATE HEIGHT: | 52 FEET | 52 FEET | 52 FEET |
| WIDTH AT CROSSARM: | 30 FEET | 38 FEET | 38 FEET |
| WIDTH AT BASE: | 14 FEET | 19 FEET | 19 FEET |
| AVERAGE SPAN LENGTH: | 690 FEET | 500 FEET | 500 FEET |
| CONDUCTOR TYPE: | ALUMINUM | ALUMINUM | ALUMINUM |
| RIGHT OF WAY WIDTH: | 250 FEET | 250 FEET | 250 FEET |
| APPROXIMATE LENGTH: | 0.93 MILES | 0.93 MILES | 0.93 MILES |

$DGNSPEC$

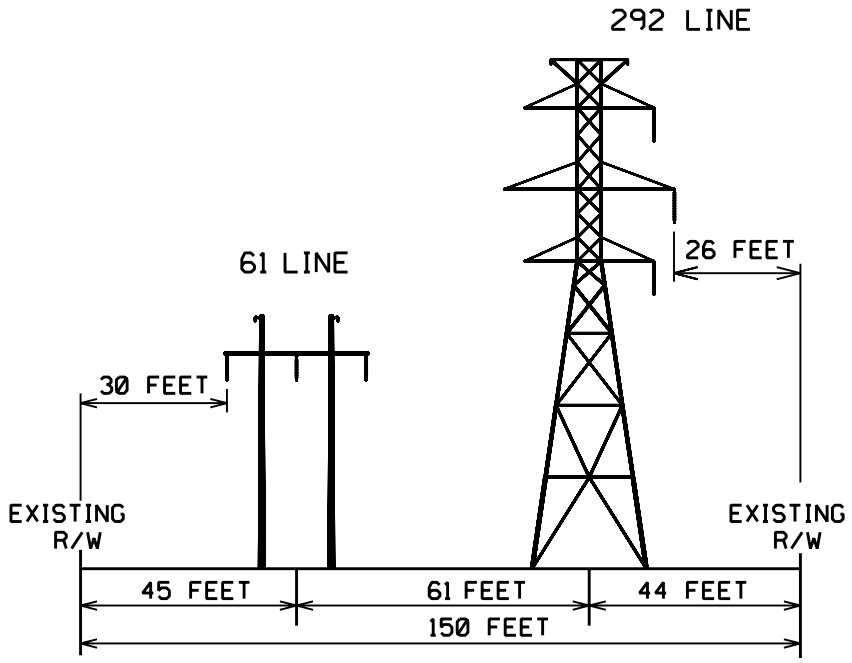


Existing Structures
292/593 thru 292/626

## TYPICAL RIGHT OF WAY LOOKING TOWARD WHEALTON

| | | |
|---|---|---|
| TYPE OF STRUCTURE: | H FRAME WOOD | WEATHERING TOWER |
| FOUNDATION : | DIRECT BURIED | EXISTING |
| APPROXIMATE HEIGHT: | 52 FEET | 106 FEET |
| WIDTH AT CROSSARM: | 30 FEET | 36 FEET |
| WIDTH AT BASE: | 14 FEET | 25 FEET |
| AVERAGE SPAN LENGTH: | 614 FEET | 762 FEET |
| CONDUCTOR TYPE: | ALUMINUM | ALUMINUM |
| RIGHT OF WAY WIDTH: | 150 FEET | 150 FEET |
| APPROXIMATE LENGTH: | 4.90 MILES | 4.90 MILES |

$UGNSPEC$

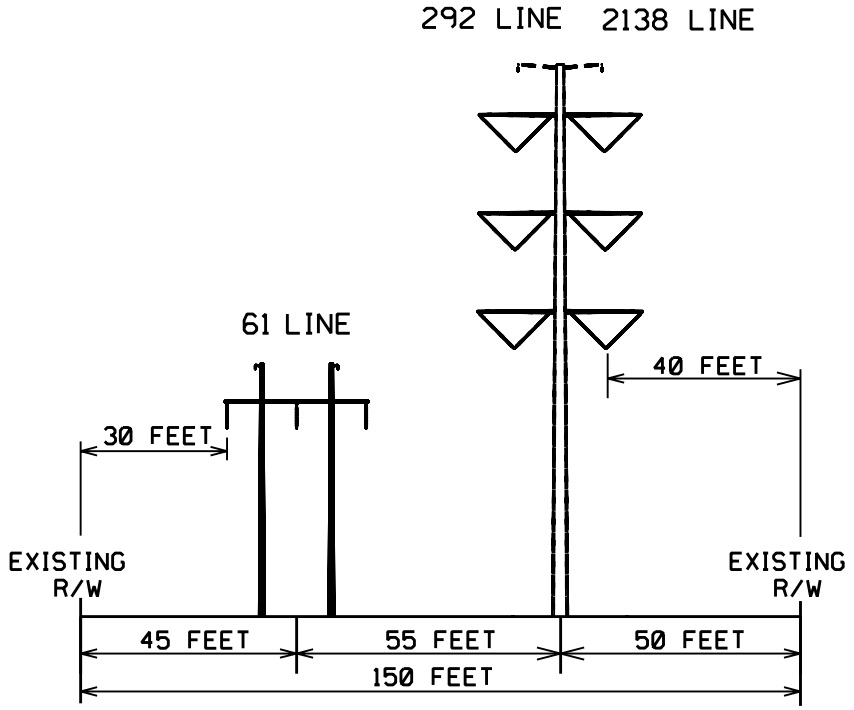


## PROPOSED CONFIGURATION

## TYPICAL RIGHT OF WAY LOOKING TOWARD WHEALTON

| | | |
|---|---|---|
| TYPE OF STRUCTURE: | H FRAME | WEATHERING POLE |
| FOUNDATION : | DIRECT BURIED | PILES/CONCRETE |
| APPROXIMATE HEIGHT: | 52 FEET | 115 FEET |
| WIDTH AT CROSSARM: | 30 FEET | 35 FEET |
| WIDTH AT BASE: | 14 FEET | 5 FEET |
| AVERAGE SPAN LENGTH: | 614 FEET | 800 FEET |
| CONDUCTOR TYPE: | ALUMINUM | ALUMINUM |
| RIGHT OF WAY WIDTH: | 150 FEET | 150 FEET |
| APPROXIMATE LENGTH: | 4.90 MILES | 4.90 MILES |

$DGNSPEC$

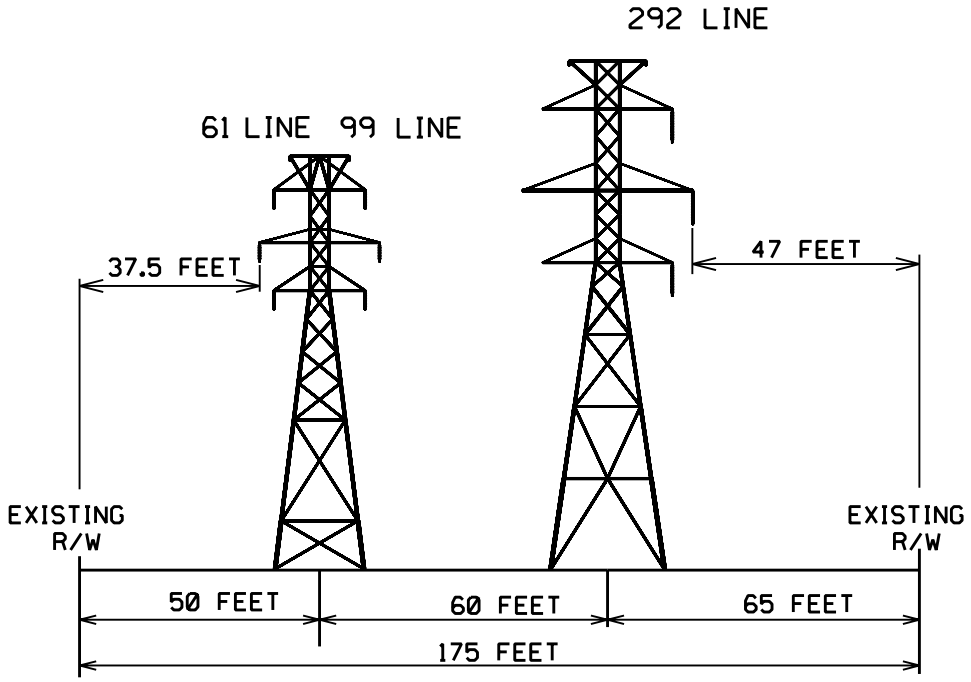


Existing Structures
292/627 thru 292/641

## TYPICAL RIGHT OF WAY LOOKING TOWARD WHEALTON

| | | |
|---|---|---|
| TYPE OF STRUCTURE: | GALVANIZED TOWER | WEATHERING TOWER |
| FOUNDATION : | EXISTING | EXISTING |
| APPROXIMATE HEIGHT: | 85 FEET | 106 FEET |
| WIDTH AT CROSSARM: | 26 FEET | 36 FEET |
| WIDTH AT BASE: | 20 FEET | 25 FEET |
| AVERAGE SPAN LENGTH: | 633 FEET | 800 FEET |
| CONDUCTOR TYPE: | ALUMINUM | ALUMINUM |
| RIGHT OF WAY WIDTH: | 175 FEET | 175 FEET |
| APPROXIMATE LENGTH: | 2.28 MILES | 2.28 MILES |

$DGNSPEC$

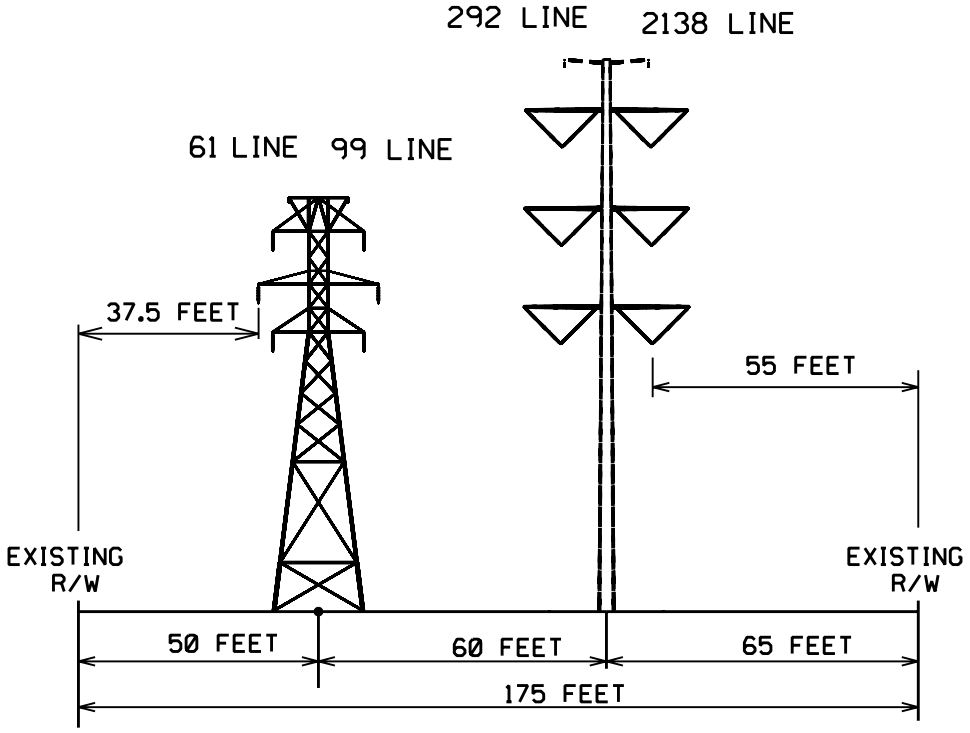


## PROPOSED CONFIGURATION

## TYPICAL RIGHT OF WAY LOOKING TOWARD WHEALTON

| | | |
|---|---|---|
| TYPE OF STRUCTURE: | GALVANIZED TOWER | WEATHERING POLE |
| FOUNDATION : | EXISTING | PILES/CONCRETE |
| APPROXIMATE HEIGHT: | 85 FEET | 115 FEET |
| WIDTH AT CROSSARM: | 26 FEET | 35 FEET |
| WIDTH AT BASE: | 20 FEET | 5 FEET |
| AVERAGE SPAN LENGTH: | 633 FEET | 800 FEET |
| CONDUCTOR TYPE: | ALUMINUM | ALUMINUM |
| RIGHT OF WAY WIDTH: | 175 FEET | 175 FEET |
| APPROXIMATE LENGTH: | 2.28 MILES | 2.28 MILES |

$DGNSPEC$

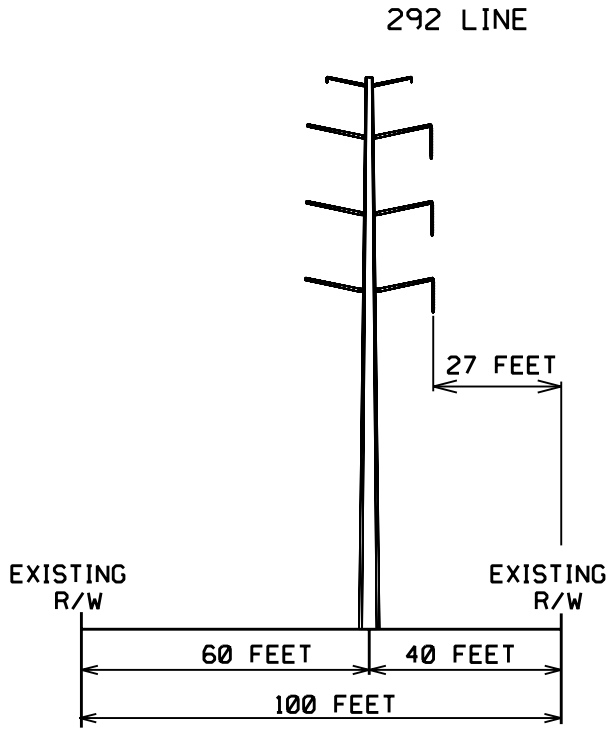


Existing Structures
292/642 thru 292/643

## TYPICAL RIGHT OF WAY LOOKING TOWARD WHEALTON

| | |
|---|---|
| TYPE OF STRUCTURE: | PAINTED POLE |
| FOUNDATION : | EXISTING |
| APPROXIMATE HEIGHT: | 115 FEET |
| WIDTH AT CROSSARM: | 26 FEET |
| WIDTH AT BASE: | 5 FEET |
| AVERAGE SPAN LENGTH: | 850 FEET |
| CONDUCTOR TYPE: | ALUMINUM |
| RIGHT OF WAY WIDTH: | 100 FEET |
| APPROXIMATE LENGTH OF LINE : | 0.38 MILES |

$DGNSPEC$

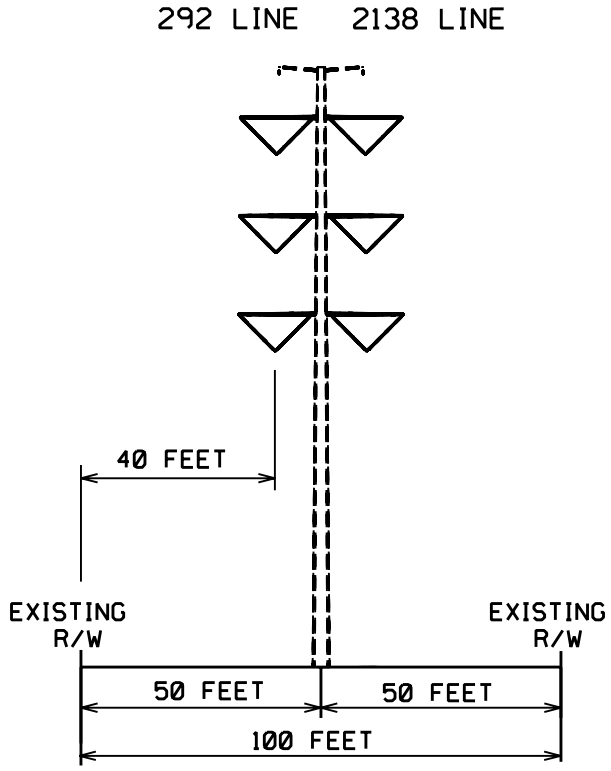


## PROPOSED CONFIGURATION

## TYPICAL RIGHT OF WAY LOOKING TOWARD WHEALTON

| | |
|---|---|
| TYPE OF STRUCTURE: | WEATHERING POLE |
| FOUNDATION : | PILES/CONCRETE |
| APPROXIMATE HEIGHT: | 125 FEET |
| WIDTH AT CROSSARM: | 35 FEET |
| WIDTH AT BASE: | 5 FEET |
| AVERAGE SPAN LENGTH: | 850 FEET |
| CONDUCTOR TYPE: | ALUMINUM |
| RIGHT OF WAY WIDTH: | 100 FEET |
| APPROXIMATE LENGTH OF LINE : | 0.38 MILES |

$DGNSPEC$

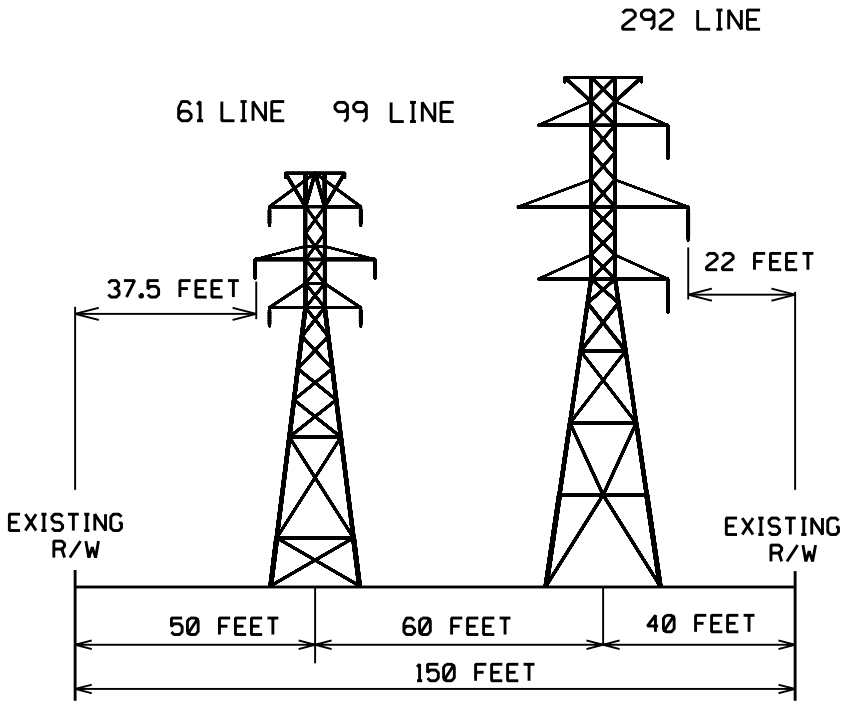


Existing Structures

292/644 thru 292/645

TYPICAL RIGHT OF WAY LOOKING TOWARD WHEALTON

| | | |
|---|---|---|
| TYPE OF STRUCTURE: | GALVANIZED TOWER | WEATHERING TOWER |
| FOUNDATION : | EXISTING | EXISTING |
| APPROXIMATE HEIGHT: | 85 FEET | 106 FEET |
| WIDTH AT CROSSARM: | 26 FEET | 36 FEET |
| WIDTH AT BASE: | 20 FEET | 25 FEET |
| AVERAGE SPAN LENGTH: | 664 FEET | 800 FEET |
| CONDUCTOR TYPE: | ALUMINUM | ALUMINUM |
| RIGHT OF WAY WIDTH: | 150 FEET | 150 FEET |
| APPROXIMATE LENGTH OF LINE : | 0.37 MILES | 0.37 MILES |

$DGNSPEC$

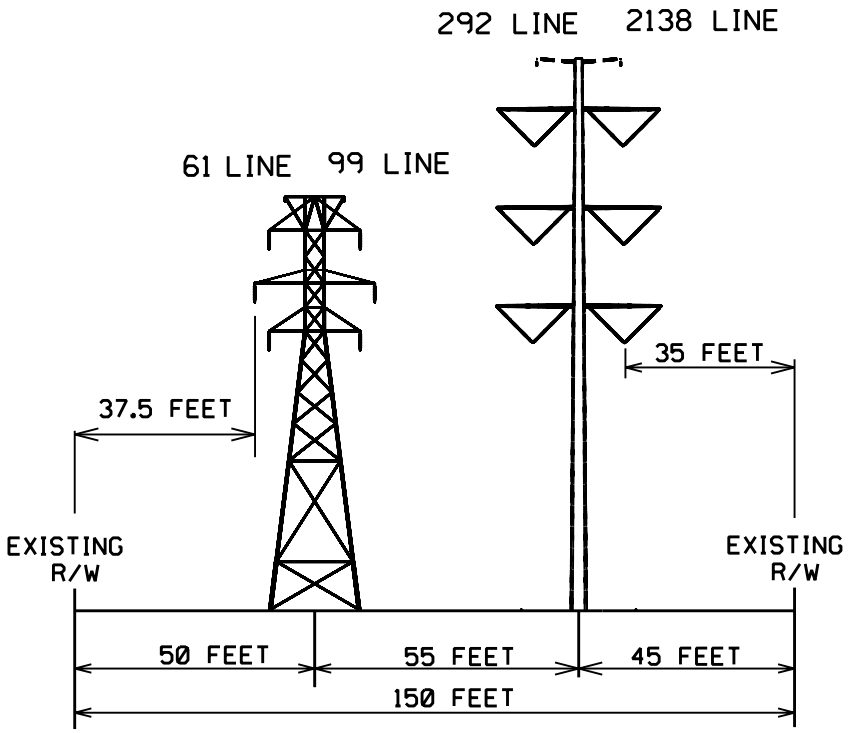


## PROPOSED CONFIGURATION

## TYPICAL RIGHT OF WAY LOOKING TOWARD SKIFFES CREEK

| | | |
|---|---|---|
| TYPE OF STRUCTURE: | GALVANIZED TOWER | WEATHERING POLE |
| FOUNDATION : | EXISTING | PILES/CONCRETE |
| APPROXIMATE HEIGHT: | 85 FEET | 115 FEET |
| WIDTH AT CROSSARM: | 26 FEET | 35 FEET |
| WIDTH AT BASE: | 20 FEET | 5 FEET |
| AVERAGE SPAN LENGTH: | 664 FEET | 800 FEET |
| CONDUCTOR TYPE: | ALUMINUM | ALUMINUM |
| RIGHT OF WAY WIDTH: | 150 FEET | 150 FEET |
| APPROXIMATE LENGTH OF LINE : | 0.37 MILES | 0.37 MILES |

$DGNSPEC$

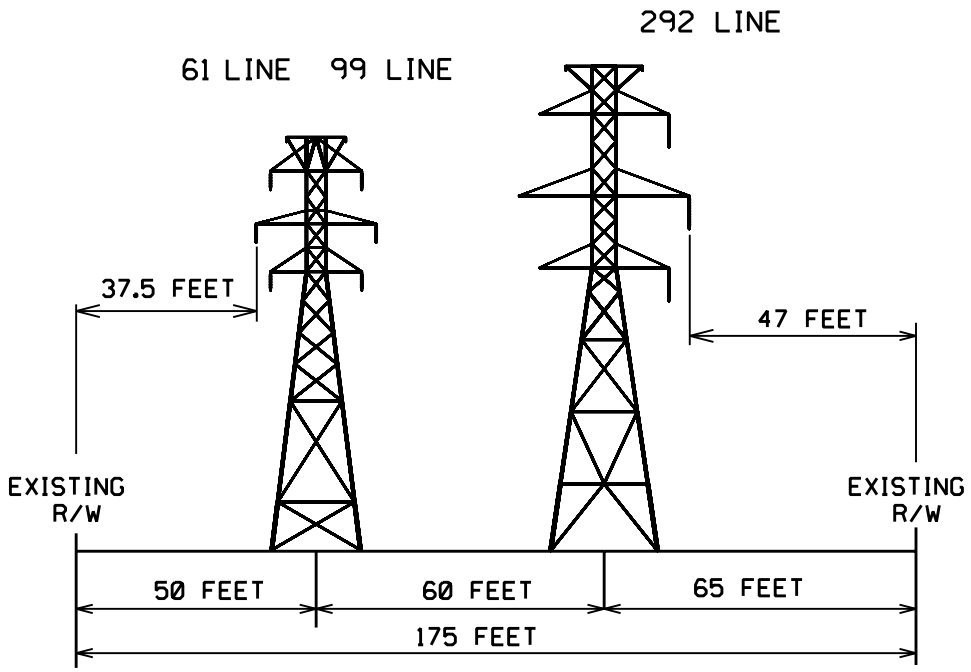


Existing Structures

292/645 thru 2138/90

## TYPICAL RIGHT OF WAY LOOKING TOWARD WHEALTON

| | | |
|---|---|---|
| TYPE OF STRUCTURE: | GALVANIZED TOWER | WEATHERING TOWER |
| FOUNDATION : | EXISTING | EXISTING |
| APPROXIMATE HEIGHT: | 85 FEET | 101 FEET |
| WIDTH AT CROSSARM: | 26 FEET | 36 FEET |
| WIDTH AT BASE: | 20 FEET | 22 FEET |
| AVERAGE SPAN LENGTH: | 285 FEET | 750 FEET |
| CONDUCTOR TYPE: | ALUMINUM | ALUMINUM |
| RIGHT OF WAY WIDTH: | 175 FEET | 175 FEET |
| APPROXIMATE LENGTH OF LINE : | 0.37 MILES | 0.37 MILES |

$DGNSPEC$

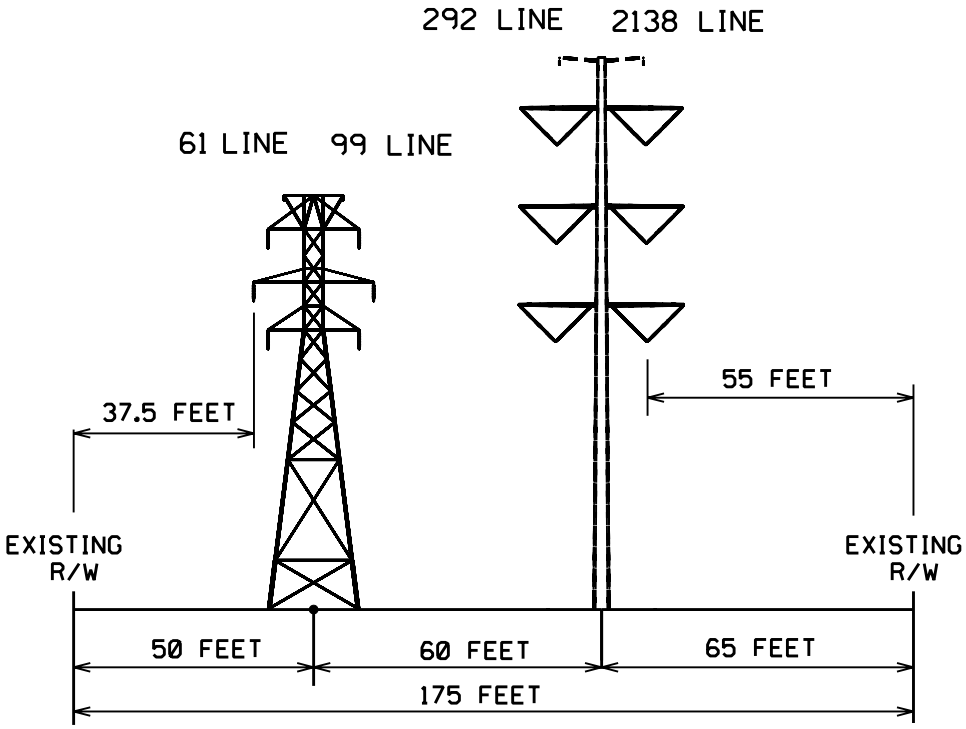


## PROPOSED CONFIGURATION

## TYPICAL RIGHT OF WAY LOOKING TOWARD WHEALTON

| | | |
|---|---|---|
| TYPE OF STRUCTURE: | GALVANIZED TOWER | WEATHERING POLE |
| FOUNDATION : | EXISTING | PILES/CONCRETE |
| APPROXIMATE HEIGHT: | 85 FEET | 110 FEET |
| WIDTH AT CROSSARM: | 26 FEET | 35 FEET |
| WIDTH AT BASE: | 20 FEET | 5 FEET |
| AVERAGE SPAN LENGTH: | 285 FEET | 800 FEET |
| CONDUCTOR TYPE: | ALUMINUM | ALUMINUM |
| RIGHT OF WAY WIDTH: | 175 FEET | 175 FEET |
| APPROXIMATE LENGTH OF LINE : | 0.37 MILES | 0.37 MILES |

$DGNSPEC$