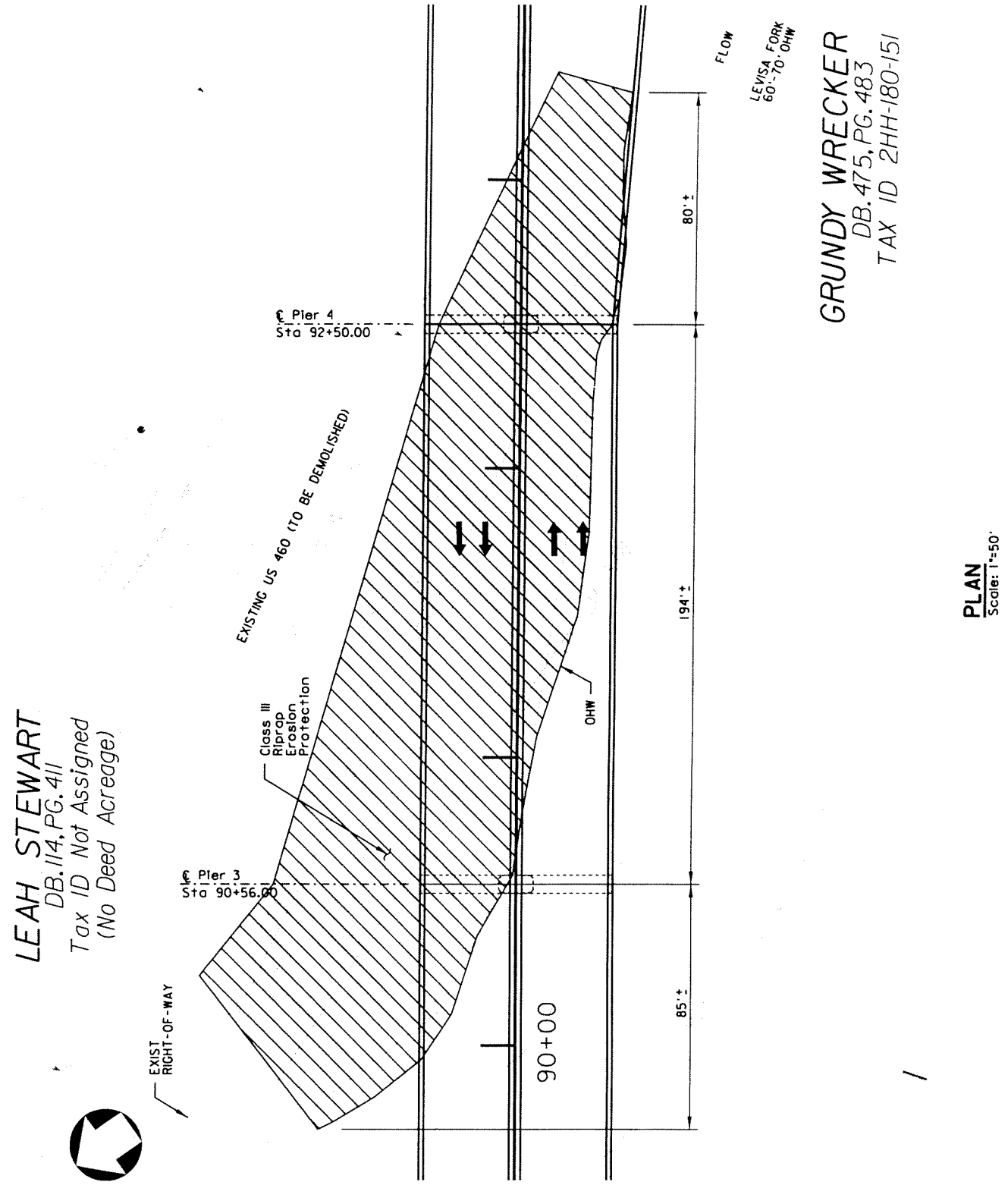

PURPOSE: PROPOSED RIPRAP PLACEMENT LEVISA FORK	PIER 3 & 4 RIPIRAP PLACEMENT LEVISA FORK PLAN VIEW	PROJECT NO. 0121-013-101, PE-101, B605 PROPOSED RIPRAP PLACEMENT ON BRIDGE 6 LEVISA FORK COUNTY OF: BUCHANAN STATE: VA APPLICATION BY: KBR SHEET 1 OF 3 DATE: 05-10-04

F:\CMD166\C_KBR\SK050004.DGN

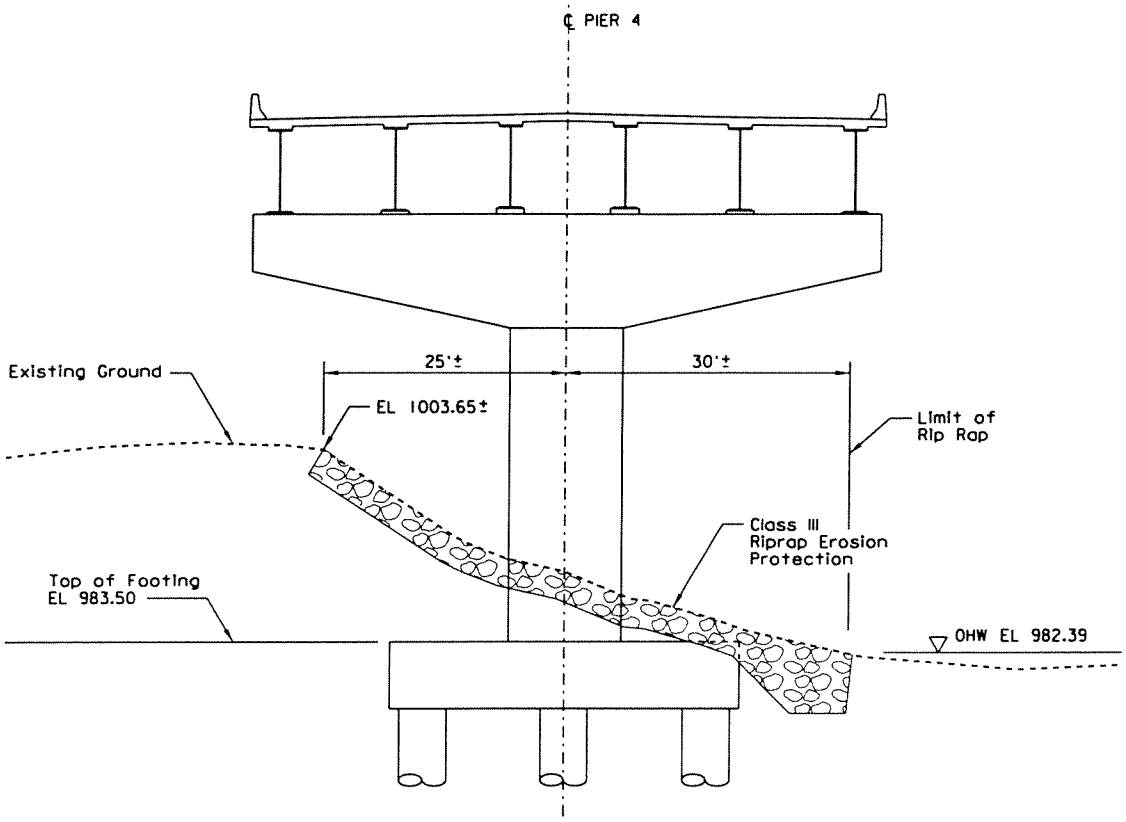

PIER 4 ELEVATION

Looking Upstation
Scale 1"=20'

PURPOSE: PROPOSED RIPRAP PLACEMENT LEVISA FORK	PIER 4 RIPRAP PLACEMENT LEVISA FORK	PROJECT NO. 0121-013-101, PE-101, B605 PROPOSED RIPRAP PLACEMENT BRIDGE 6 LEVISA FORK COUNTY OF: BUCHANAN STATE: VA APPLICATION BY: KBR SHEET 2 OF 3 DATE: 05-10-04

F:\CM0166\C_KBR\SK05\304.DGN

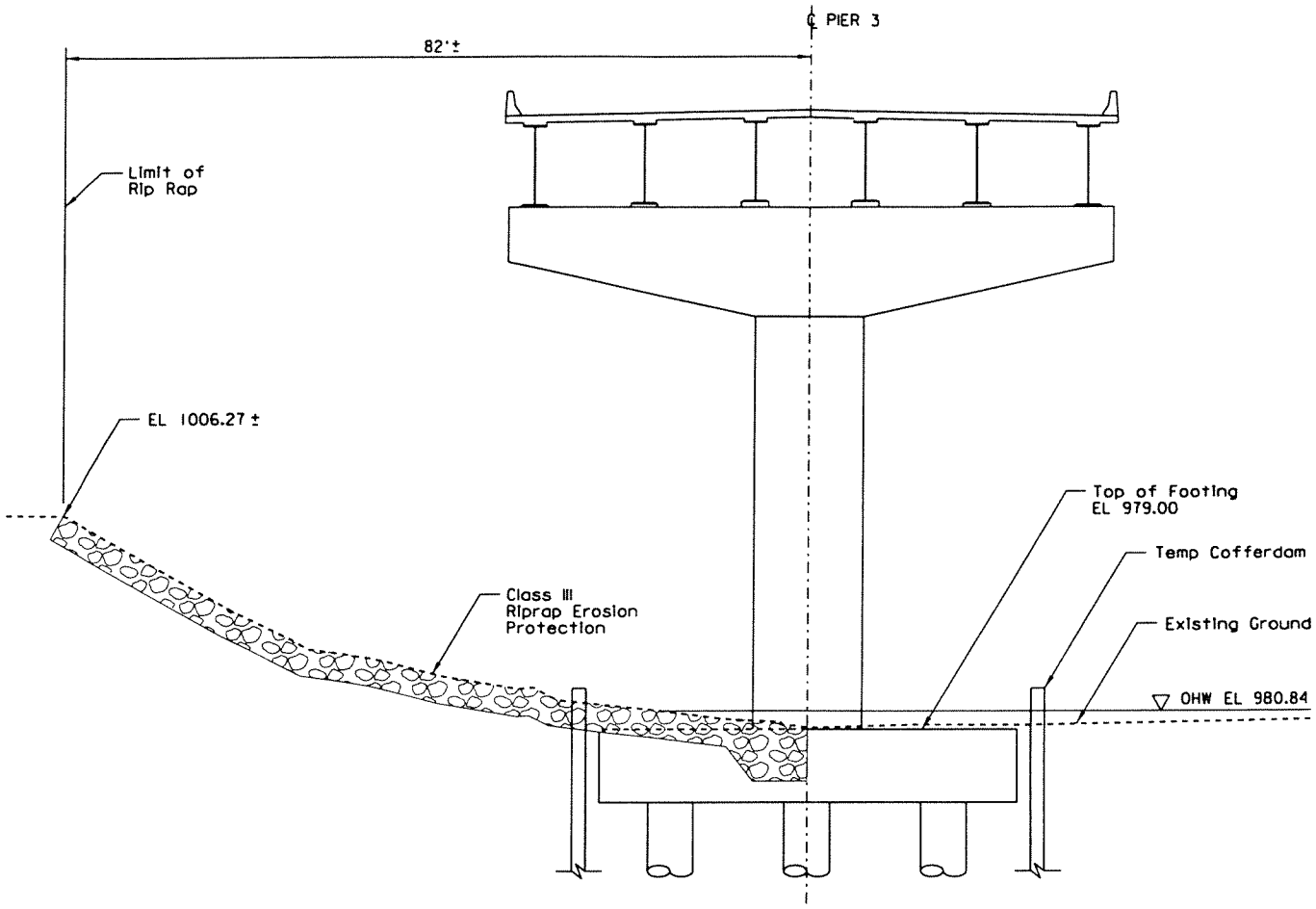

PIER 3 ELEVATION

Looking Upstation
Scale 1"=20'

PURPOSE: PROPOSED RIPRAP PLACEMENT LEVISA FORK	PIER 3 RIPRAP PLACEMENT LEVISA FORK	PROJECT NO. 0121-013-101, PE-101, B605 PROPOSED RIPRAP PLACEMENT ON BRIDGE 6 LEVISA FORK COUNTY OF: BUCHANAN STATE: VA APPLICATION BY: KBR SHEET 3 OF 3 DATE: 05-10-04

F:\CM0166C_KBR\SK05\104.DGN