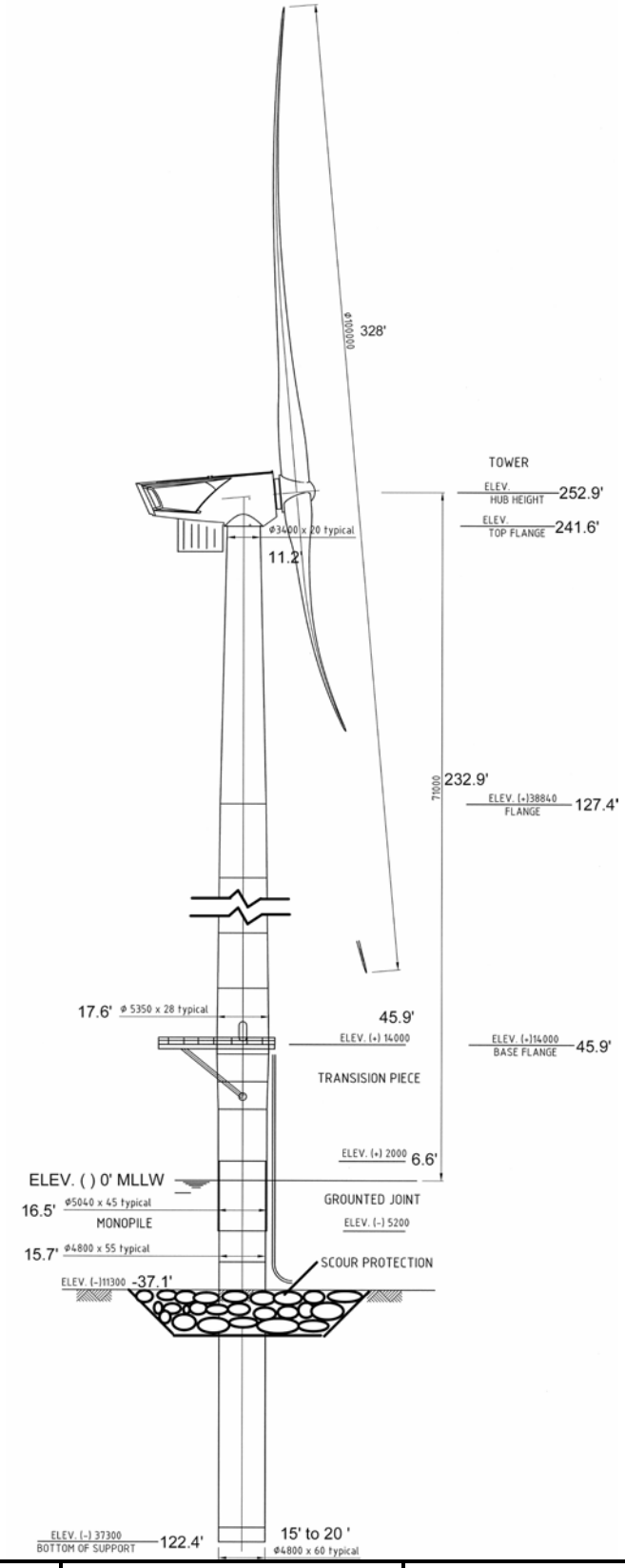

Application by: **Winergy, LLC** 640 Montauk Highway Shirley NY, 11967	Figure 7 **3.6MW WTG** May 2003	**perotsystems®** Government Services Mill Wharf Plaza Suite 208 Scituate, MA 02066