MARINE RESOURCES COMMISSION
RECEIVED
AUG 13 1998

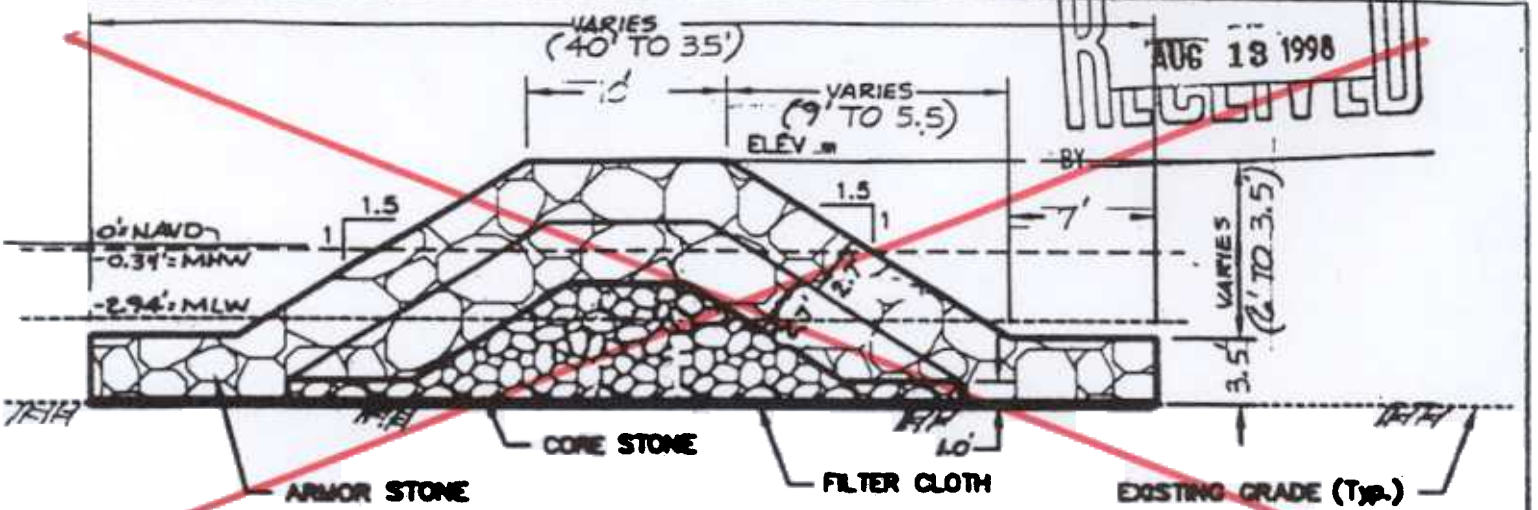

TYPICAL BREAKWATER SECTION

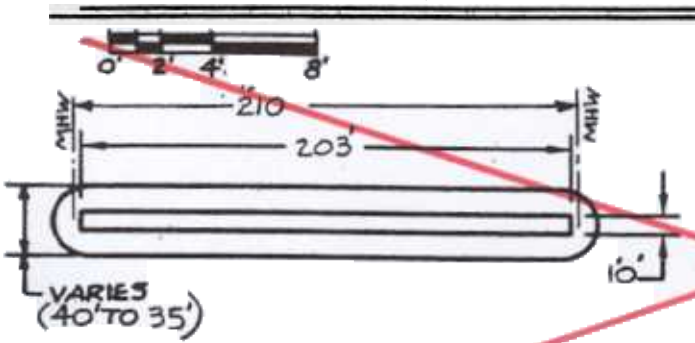

TYPICAL BREAKWATER DETAIL

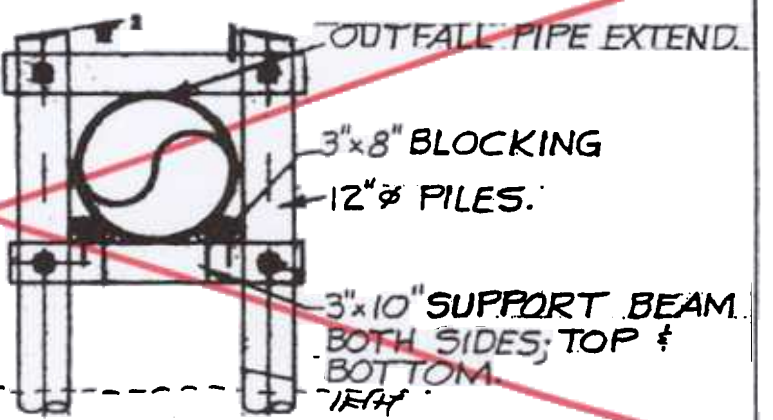

PIPE SUPPORT

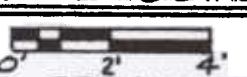

RECEIVED
AUG 20 1998

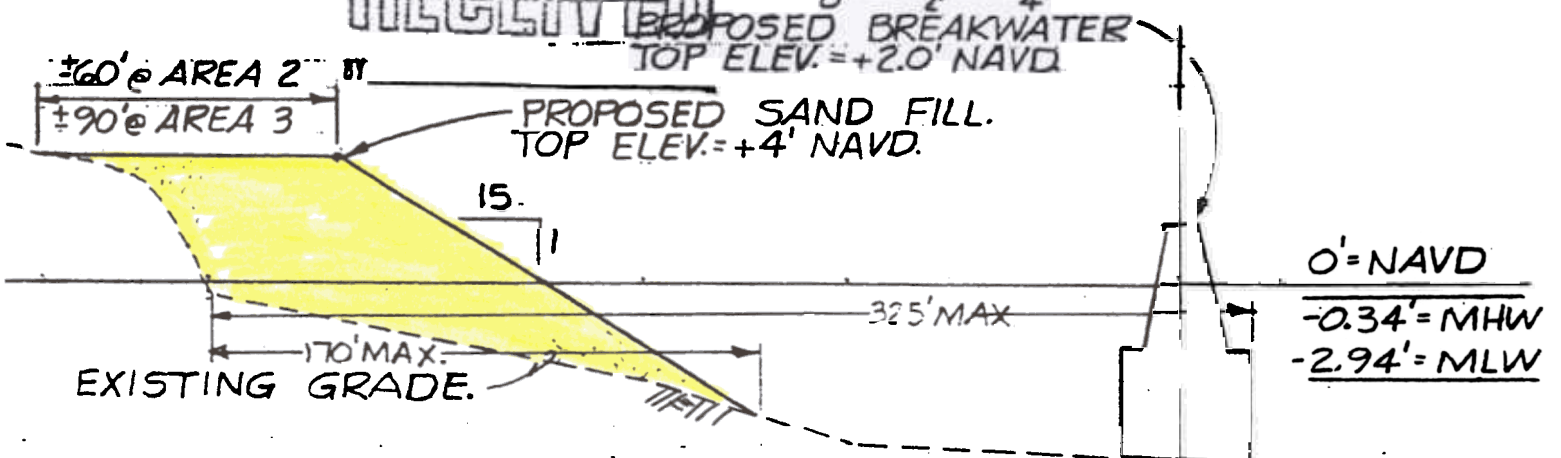

TYPICAL BEACH FILL SECTION

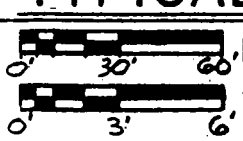

HORIZ. SCALE : 1" = 60'
VERT. SCALE : 1" = 6'

SHEET 7 of 7

APPL. BY: CITY OF NORFOLK

DATE: AUGUST 1998