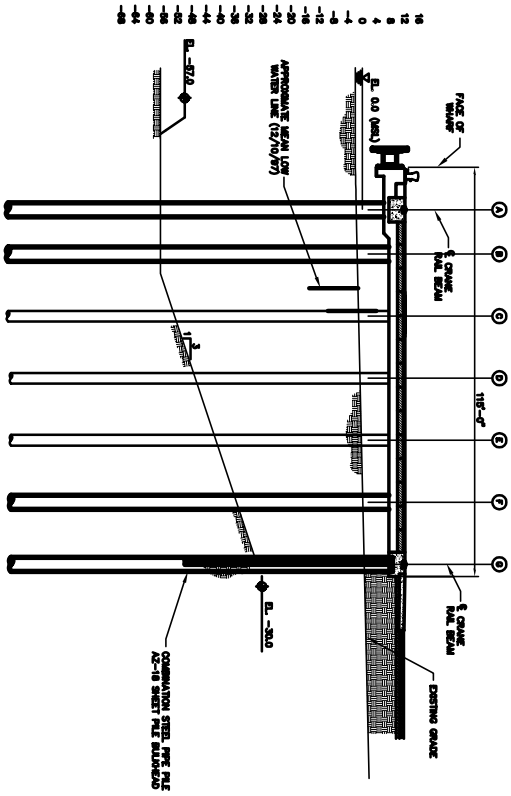

SECTION AT STA. 32+00

1" = 650'-0"

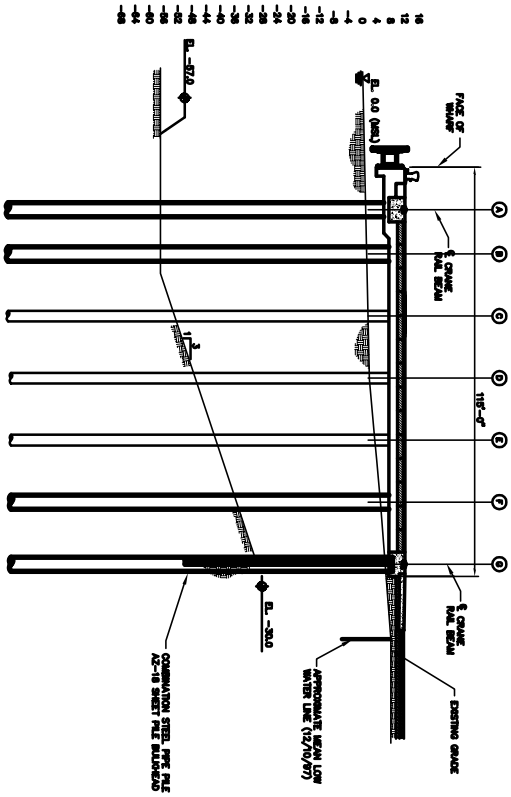

SECTION AT STA. 36+00

1" = 650'-0"

DATE: SEPTEMBER 20, 2002

JOB NUMBER: 1520

SCALE: AS NOTED

SOURCE: BASE MAP PROVIDED BY GEE & JENSON
(S9: sect 32-36.dwg)

FIGURE 5-16C
OPEN-FACE WHARF STRUCTURE SECTIONS
APM TERMINALS
PORTSMOUTH, VIRGINIA

WILLIAMSBURG ENVIRONMENTAL GROUP, INC.
Environmental Consultants

3000 Easter Circle
Williamsburg, Virginia 23188
(757) 220-6869

7325 Beaufont Springs Drive, Suite 100
Richmond, Virginia 23225
(804) 267-3474

46030 Manekin Plaza, Suite 160
Sterling, Virginia 20166
(703) 406-1390