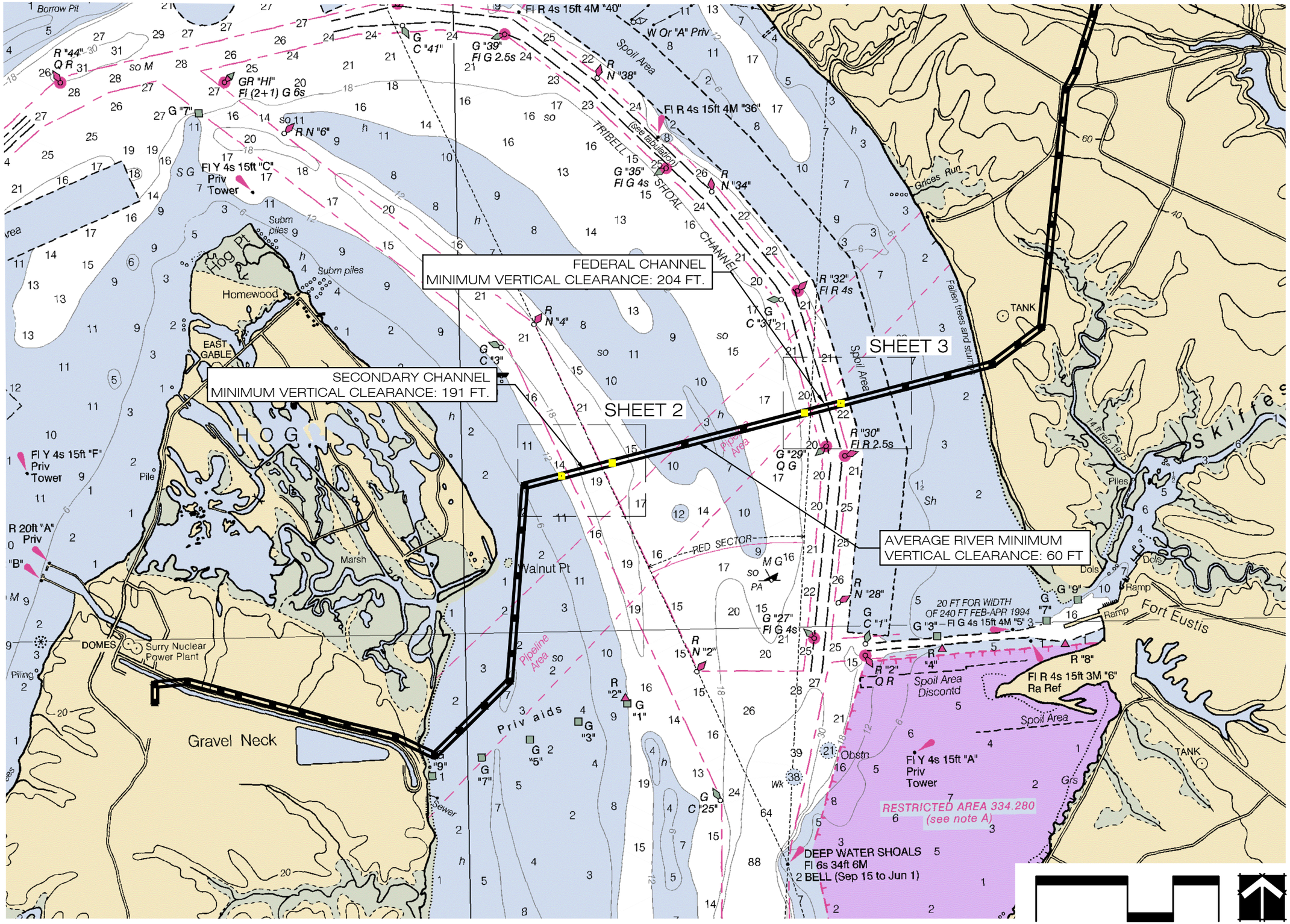

5209 Center Street
Williamsburg, Virginia 23188
(757) 220-0669

1011 Boulder Springs Drive, Suite 225
Richmond, Virginia 23225
(804) 267-3474

150 Riverside Parkway, Suite 301
Fredericksburg, Virginia 22406
(540) 785-3544

WILLIAMSBURG ENVIRONMENTAL GROUP, INC.
Environmental Consultants

PROPOSED JAMES RIVER CROSSING NAVIGATIONAL CLEARANCES

SHEET 1 OF 3

SURRY-SKIFFES CREEK-WHEALTON

SURRY COUNTY AND JAMES CITY COUNTY, VIRGINIA

DATE: AUGUST 8, 2013
REVISED: JUNE 24, 2013
JOB NUMBER: 4652
SCALE: 1 INCH = 2,500 FEET
SOURCE: DOMINION VIRGINIA POWER 2013, NOAA 2008

\\fan.wegnet.com\WEG\WMBGcad\4600s\4652-Chickahominy-Skiffes Creek-Whealton\Regulatory\Coast Guard\4652 - Coast Guard Maps 2 (08-2013).dwg

STRUCTURE OFFSET DISTANCES	
STRUCTURE	MIN. OFFSET (FT)
FROM CHANNEL LIMITS	
582/21	155
582/22	244
582/21 FENDER	100
582/22 FENDER	187

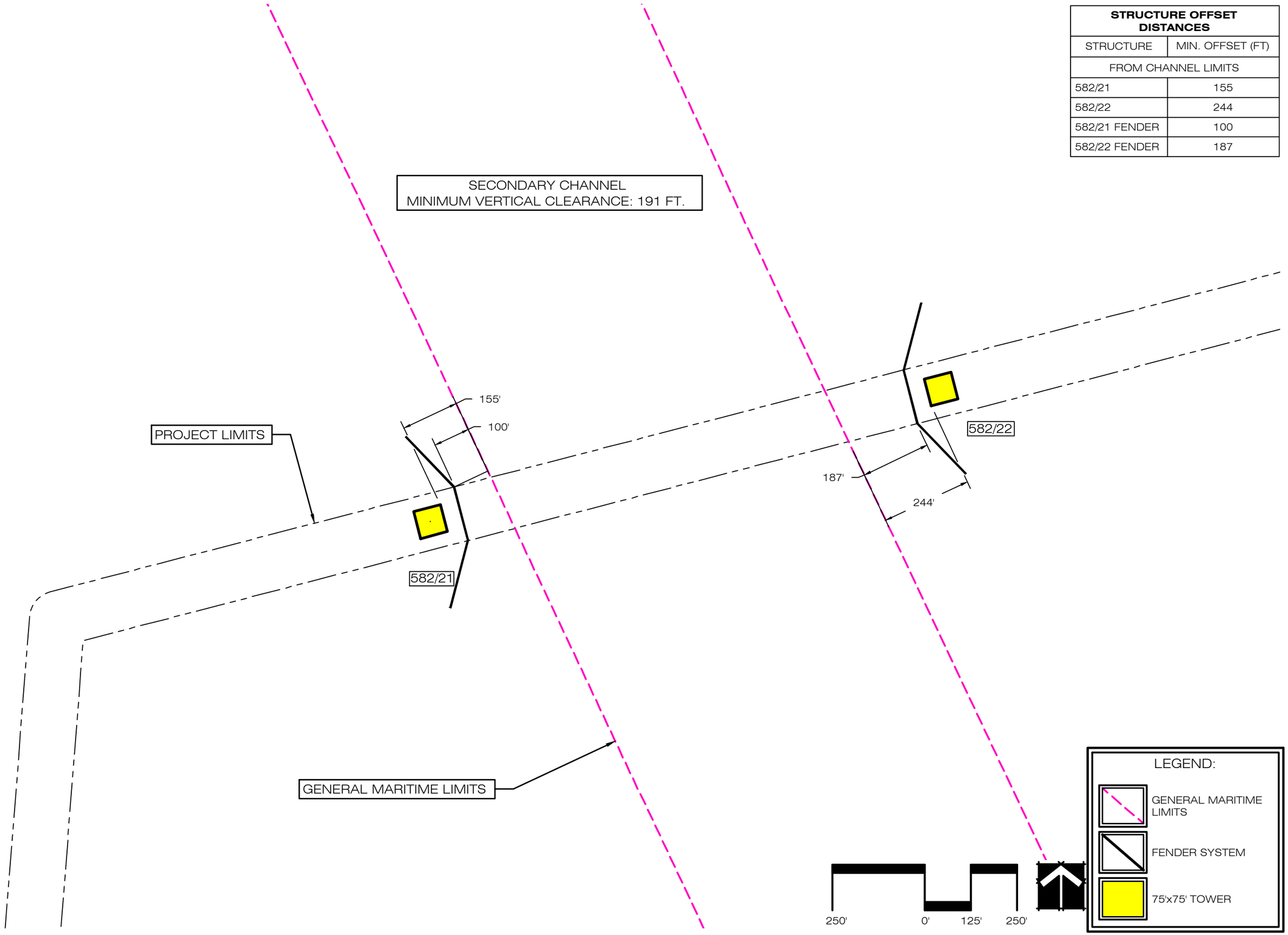

5209 Center Street
Williamsburg, Virginia 23188
(757) 220-0669
1011 Boulder Springs Drive, Suite 225
Richmond, Virginia 23225
(804) 267-3474
150 Riverside Parkway, Suite 301
Fredericksburg, Virginia 22406
(540) 785-5544
WILLIAMSBURG ENVIRONMENTAL GROUP, INC.
Environmental Consultants

PROPOSED JAMES RIVER CROSSING NAVIGATIONAL CLEARANCES

SHEET 2 OF 3

SURRY-SKIFFES CREEK-WHEALTON

SURRY COUNTY AND JAMES CITY COUNTY, VIRGINIA

DATE: AUGUST 8, 2013

JOB NUMBER: 4652

SCALE: 1 INCH = 250 FEET

SOURCE: DOMINION VIRGINIA POWER 2013, NOAA 2008

W:\WMBGcad\4600s\4652-Chickahominy-Skiffes Creek-Whealton\Regulatory\Coast Guard\4652 - Coast Guard Maps 2.dwg

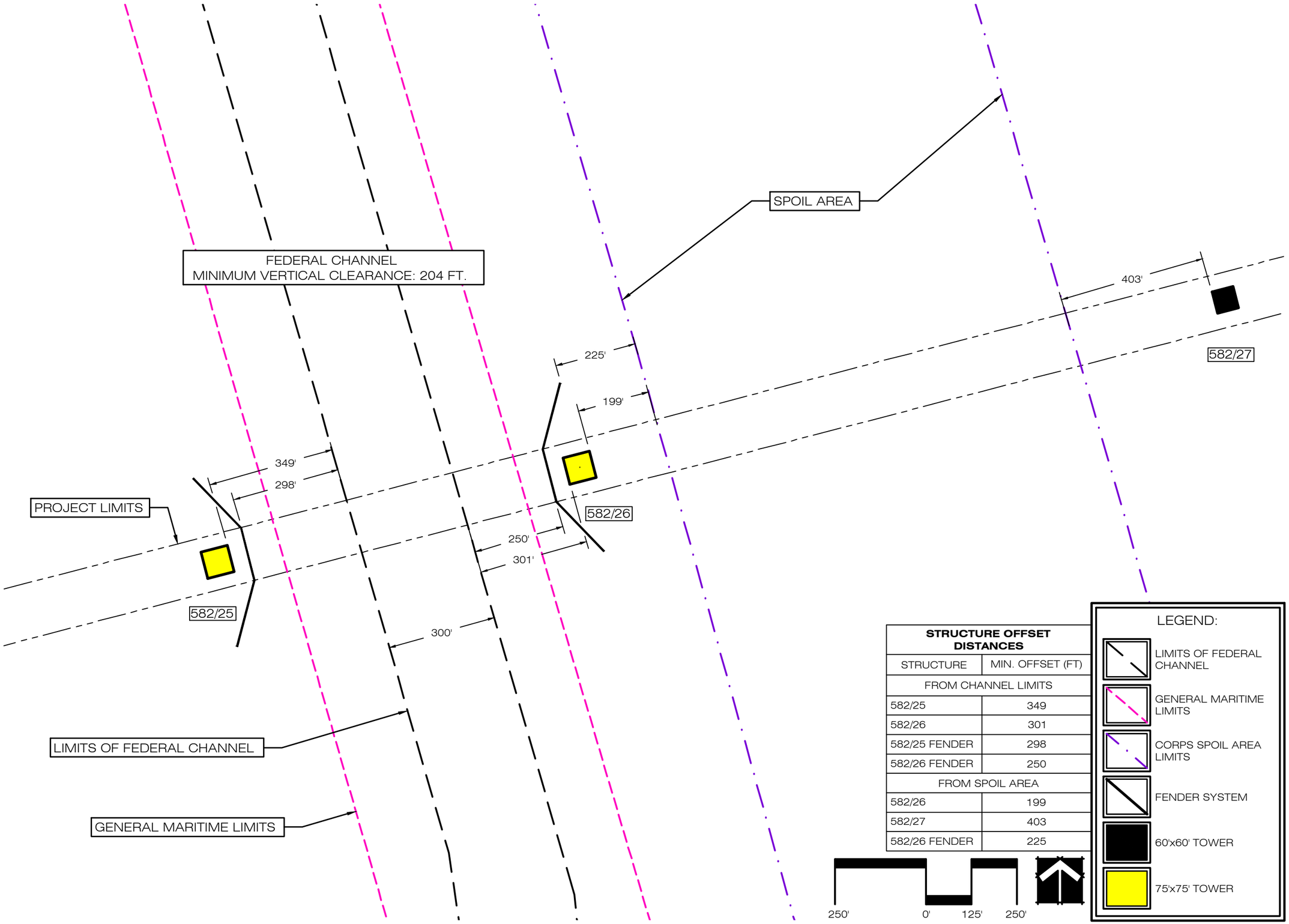

STRUCTURE OFFSET DISTANCES

STRUCTURE	MIN. OFFSET (FT)
FROM CHANNEL LIMITS	
582/25	349
582/26	301
582/25 FENDER	298
582/26 FENDER	250
FROM SPOIL AREA	
582/26	199
582/27	403
582/26 FENDER	225

5209 Center Street
Williamsburg, Virginia 23188
(757) 220-0669
1011 Boulder Springs Drive, Suite 225
Richmond, Virginia 23225
(804) 267-3474
150 Riverside Parkway, Suite 301
Fredericksburg, Virginia 22406
(540) 785-5544
WILLIAMSBURG ENVIRONMENTAL GROUP, INC.
Environmental Consultants

PROPOSED JAMES RIVER CROSSING NAVIGATIONAL CLEARANCES

SHEET 3 OF 3

SURRY-SKIFFES CREEK-WHEALTON

SURRY COUNTY AND JAMES CITY COUNTY, VIRGINIA

DATE: AUGUST 8, 2013
JOB NUMBER: 4652
SCALE: 1 INCH = 250 FEET
SOURCE: DOMINION VIRGINIA POWER 2013, NOAA 2008

W:\WMBGcad\4600s\4652-Chickahominy-Skiffes Creek-Wheaton\Regulatory\Coast Guard\4652 - Coast Guard Maps 2.dwg

CONCEPTUAL TOWER LEG FOUNDATION DETAIL

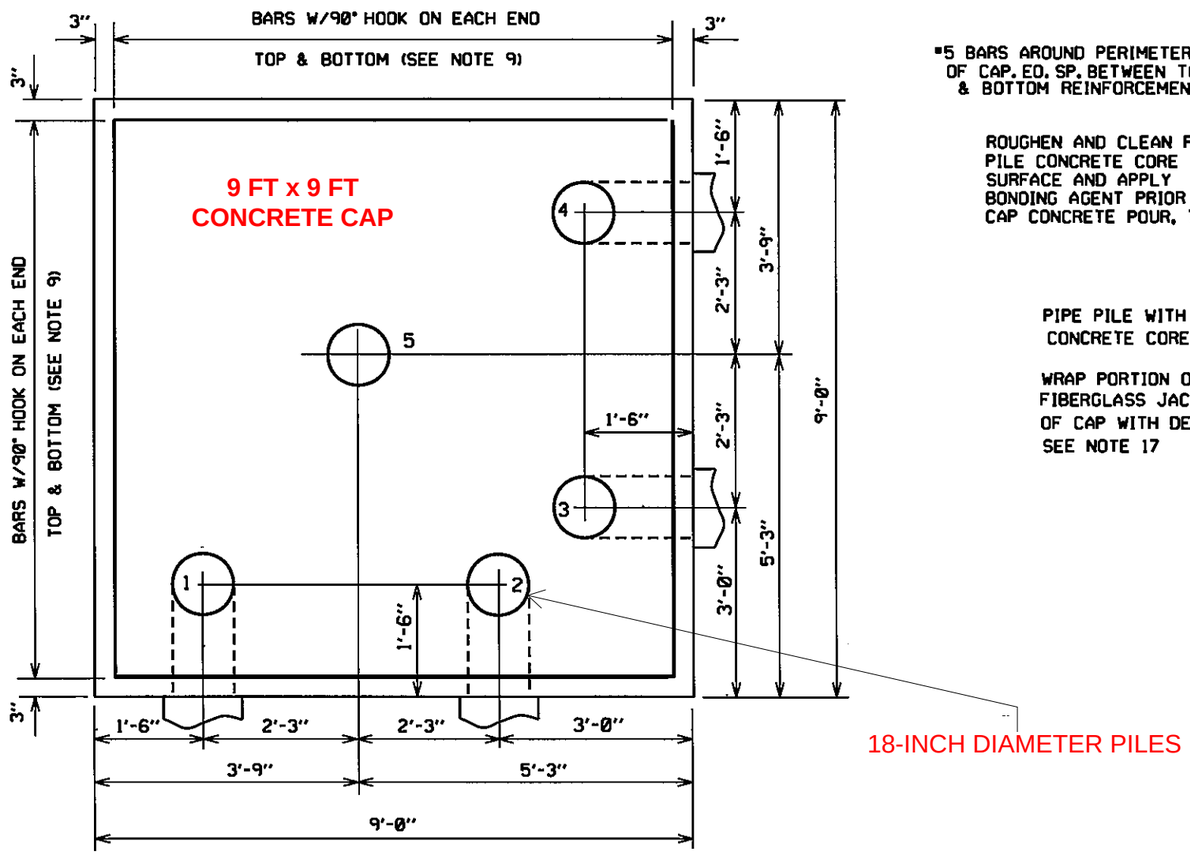

PLAN

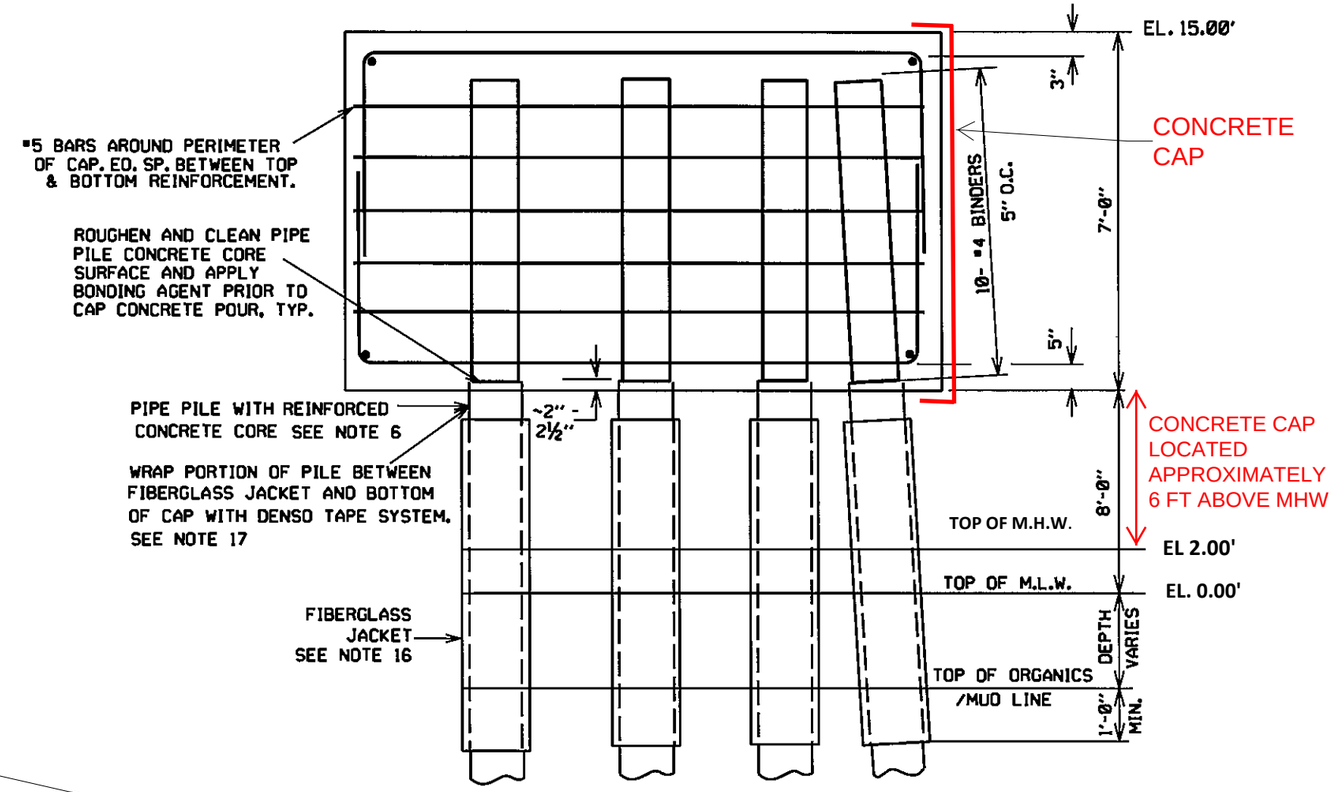

FRONT ELEVATION

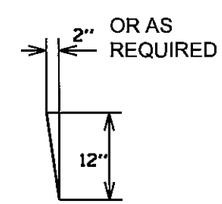

ALL PILES TO BE BATTERED EXCEPT #5, WHICH IS VERTICAL.

18" DIA. PIPE PILES ASSUMED. DEPENDING ON BASE REACTIONS AND SUBSURFACE CONDITIONS, CAP SIZE CAN BE ENLARGED TO USE 24" DIA. BATTERED PILES OR ADDITIONAL 18" DIA. BATTERED PILES IF NEEDED.

CONCEPTUAL: NOT FINAL DESIGN

IN ACCORDANCE WITH NW12, SEPARATE FOUNDATIONS TO BE USED FOR EACH TOWER LEG

FOR GENERAL NOTES SEE DRAWING

Transmission Construction

CONCEPTUAL FOUNDATION DETAILS
JAMES RIVER CROSSING

Dominion
701 E. Cary Street
Richmond, VA 23219

	ORIGINAL	REVISION	DRAWING NO.
DRAWN			
CHECKED			
APPROVED			
DATE			CAD NO. JRxing1

PAGE NO.

$YTIME$ $DGNSPEC$ TES11X17

JRxing1.dgn 11/2/2012 11:59:24 AM

CONCEPTUAL FENDER SYSTEM DETAIL

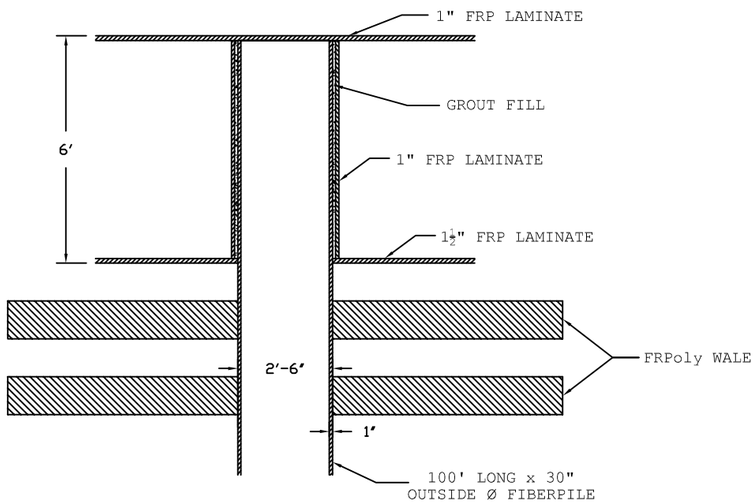

TYPICAL PILE CAP CROSS SECTION A-A
SCALE: ¼" = 1'

DESIGN VESSEL:
2,500 DWT (3,500 TONNE DISPLACEMENT WEIGHT)
IMPACT VELOCITY = 4.4 KNOTS
IMPACT ENERGY = 2,560 KIP-FT
ENERGY ABSORBED PER PILE = 393 KIP-FT
NUMBER OF PILES REQUIRED = 7
LATERAL DEFLECTION OF SYSTEM = 10.3'
- LOAD APPLIED AT CENTER OF FENDER WING

TOTAL GROUT FOR 53 PILE CAP LOCATIONS = 35CY

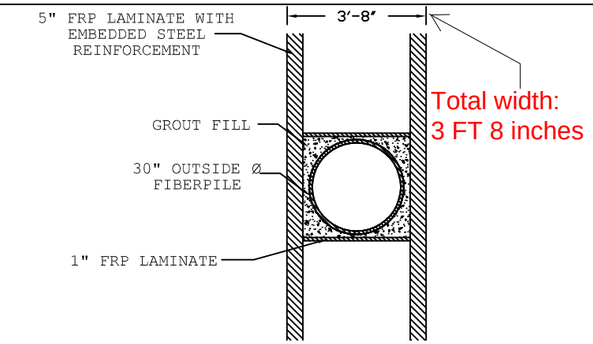

SECTION B-B PLAN VIEW

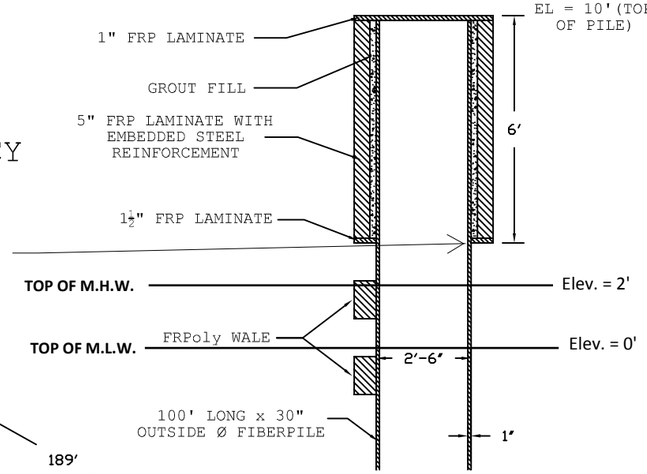

TYPICAL PILE CAP CROSS SECTION B-B
SCALE: ¼" = 1'

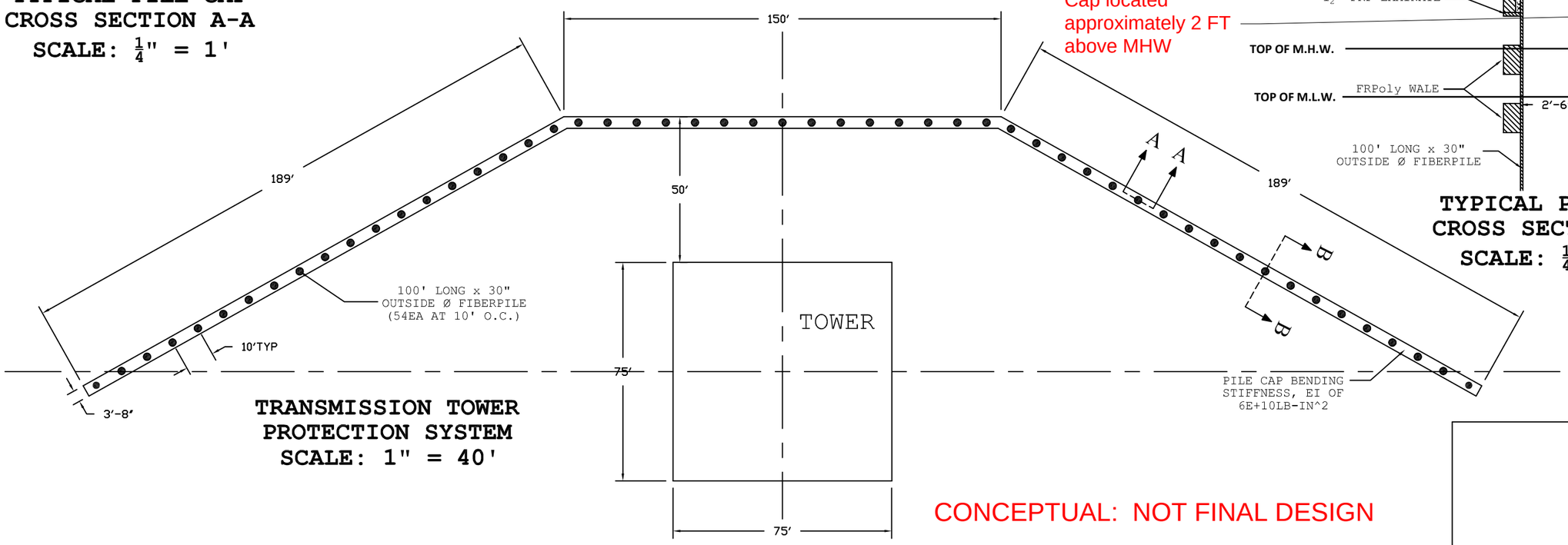

TRANSMISSION TOWER PROTECTION SYSTEM
SCALE: 1" = 40'

CONCEPTUAL: NOT FINAL DESIGN

FIBERPILE SPECS

OUTSIDE DIAMETER (IN)	WALL THICKNESS (IN)	CROSS SECTION (IN^2)	MOMENT OF INERTIA (IN^4)	ALLOWABLE COMPRESSION SHORT COLUMN (KIPS)	MOMENT (FAILURE) (FT-LBS)	MAX BENDING STRESS (FAILURE) (PSI)	MODULUS (PSI)	BENDING STIFFNESS, EI (LB-IN^2)	ALLOWABLE SHEAR (LBS)	WEIGHT (LBS/FT)
30	1.000	91.10	9588.6	7838	2,025,548	38,024	4,319,000	4.14E+10	546,621	80.9

COMPOSITE ADVANTAGE
401 KISER STREET
DAYTON, OH 45404
TEL:(937) 723-9031 FAX:(937) 723-9034

REVISION	REVISED
A	5/23/13

DRAWN	CHECKED
AR	SR

DESIGNED
AL

CUSTOMER .

PAGE TITLE: PILE AND CAP DETAILS

DRAWING TITLE: JAMES RIVER TOWER PROTECTION SYSTEM

SHEET NO. 1/1