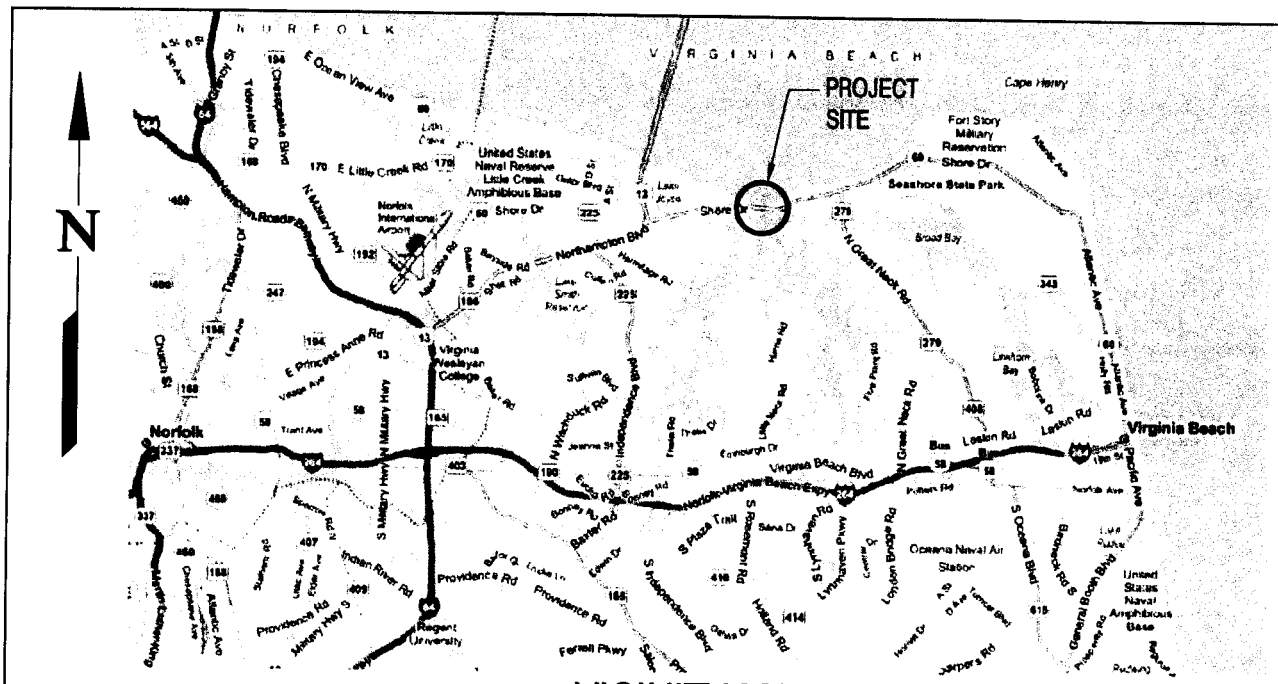

VICINITY MAP

NO SCALE

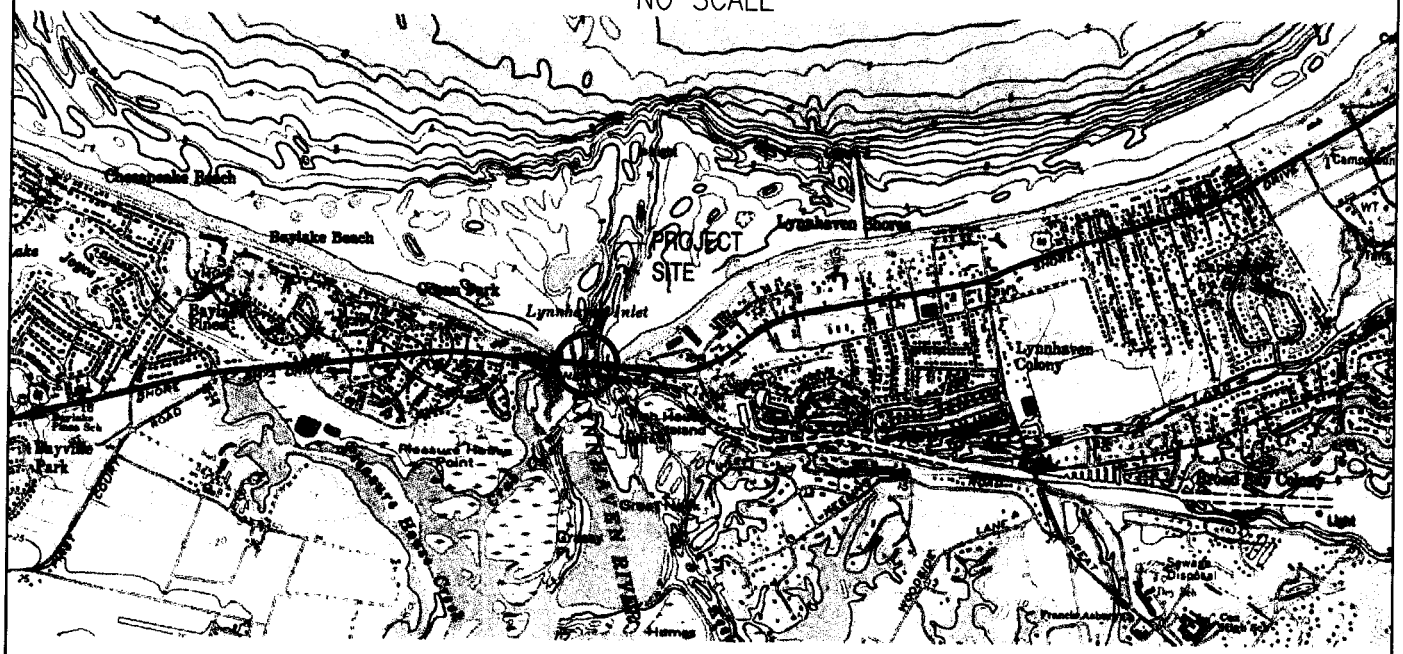

LOCATION MAP

NO SCALE

VICINITY MAP COURTESY OF DELORME STREET ATLAS USA 2002.

LOCATION MAP COURTESY OF USGS AND NATIONAL OCEAN SERVICE 1986.

VICINITY MAP AND LOCATION MAP

NO SCALE

LESNER BRIDGE REPLACEMENT
CN PROJECT #:2100

DATE: AUGUST 2012
IN: LYNNHAVEN INLET
CITY OF: VIRGINIA BEACH STATE: VA
APPLICATION BY: VIRGINIA BEACH PUBLIC WORKS
AGENT: CLARK NEXSEN
SHEET 2 OF 21

SKC-1

CLARK • NEXSEN
Architecture & Engineering

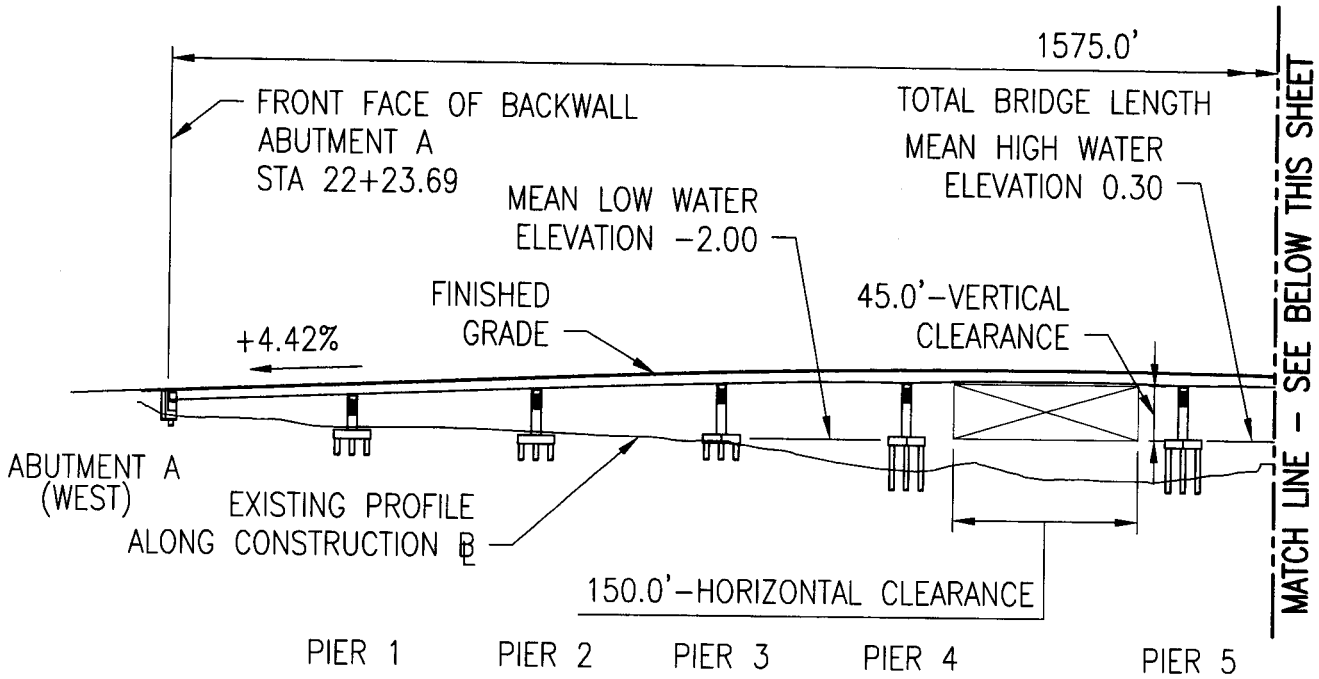

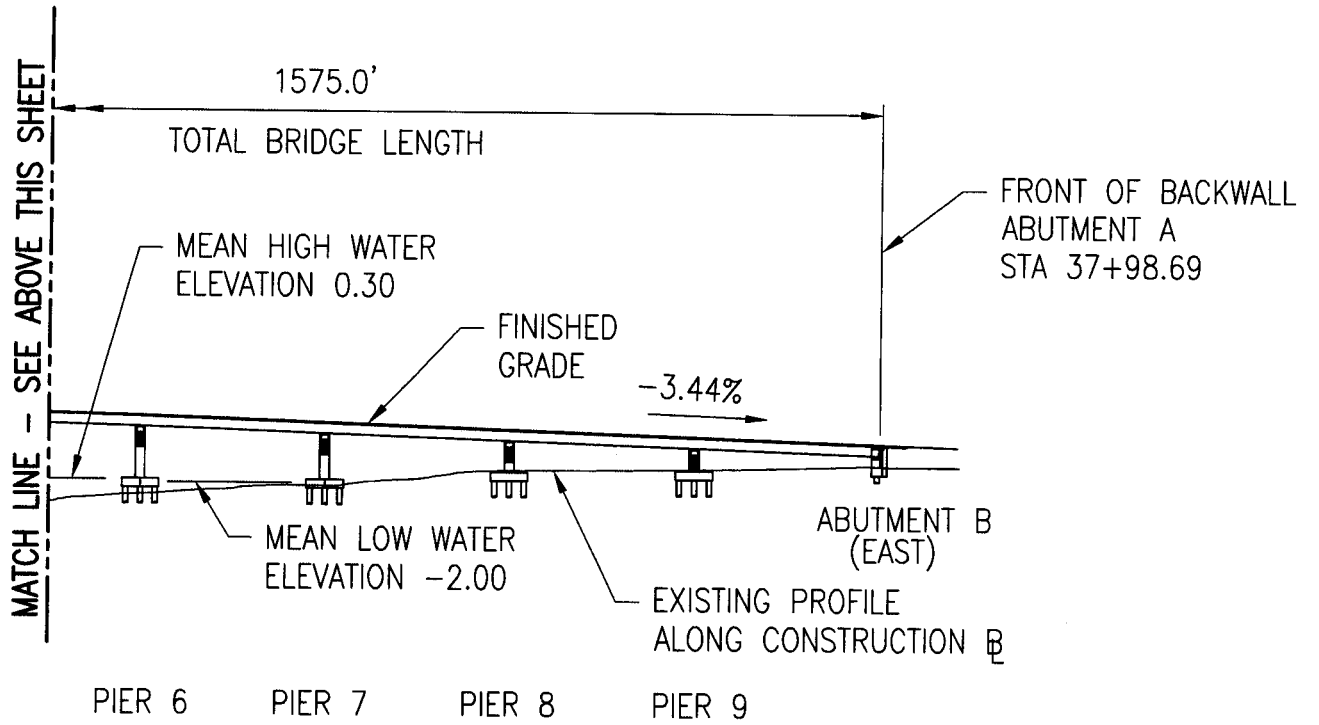

INLET CROSS SECTION

0 150' 300'

SCALE: 1"=150'

CLARK • NEXSEN
Architecture & Engineering

LESNER BRIDGE REPLACEMENT
CN PROJECT #:2100

DATE: AUGUST 2012
IN: LYNNHAVEN INLET
CITY OF: VIRGINIA BEACH STATE: VA
APPLICATION BY: VIRGINIA BEACH PUBLIC WORKS
AGENT: CLARK NEXSEN
SHEET 12 OF 21

SKC-6

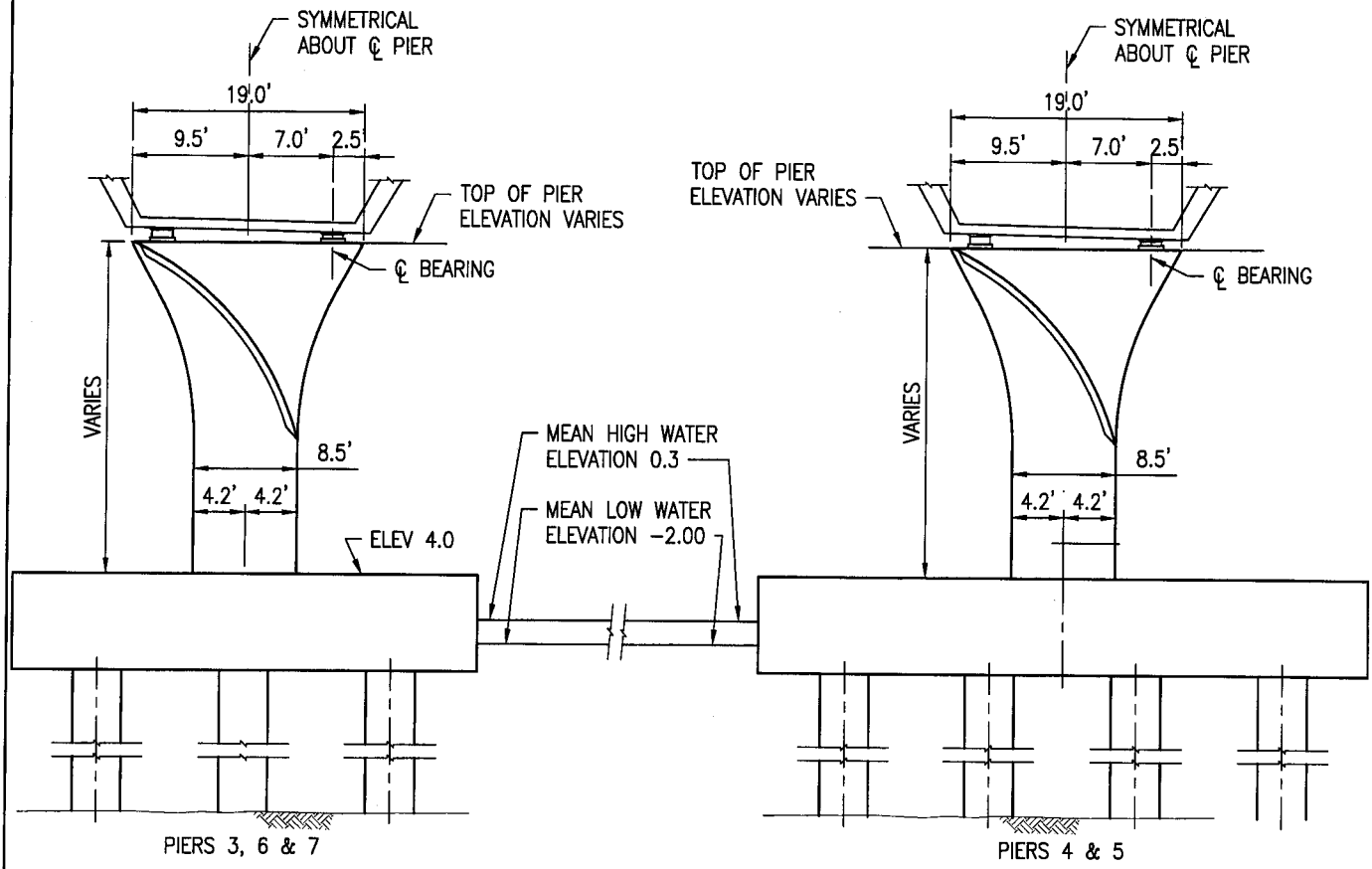

TYPICAL LONGITUDINAL SECTION

PIER SECTIONS

0 10' 20'

SCALE: 1"=10'

CLARK • NEXSEN
Architecture & Engineering

LESNER BRIDGE REPLACEMENT
CN PROJECT #:2100

DATE: OCTOBER 2012
IN: LYNNHAVEN INLET
CITY OF: VIRGINIA BEACH STATE: VA
APPLICATION BY: VIRGINIA BEACH PUBLIC WORKS
AGENT: CLARK NEXSEN
SHEET 13 OF 26

SKC-7

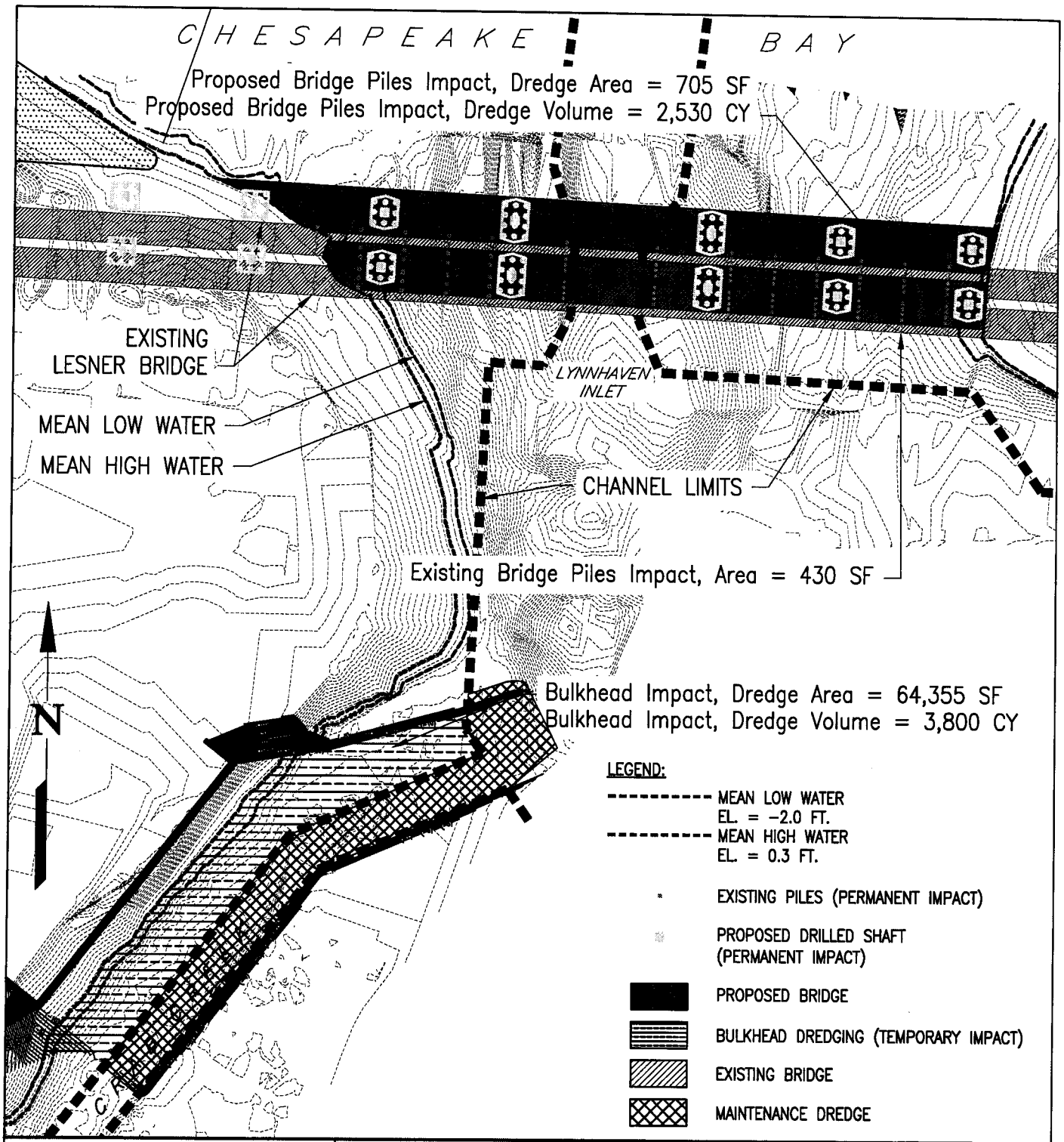

HORIZONTAL DATUM: VIRGINIA COORDINATE SYSTEM, SOUTH ZONE NAD83 (1993) VIRGINIA HARN. VERTICAL DATUM: NAVD 88 (NORTH AMERICAN VERTICAL DATUM 1988).

CLARK • NEXSEN
Architecture & Engineering

IMPACT QUANTITIES

0 160' 320'

SCALE: 1"=160'

LESNER BRIDGE REPLACEMENT
CN PROJECT #:2100

DATE: OCTOBER 2012
IN: LYNNHAVEN INLET
CITY OF: VIRGINIA BEACH STATE: VA
APPLICATION BY: VIRGINIA BEACH PUBLIC WORKS
AGENT: CLARK NEXSEN
SHEET 4 OF 26

SKC-1B

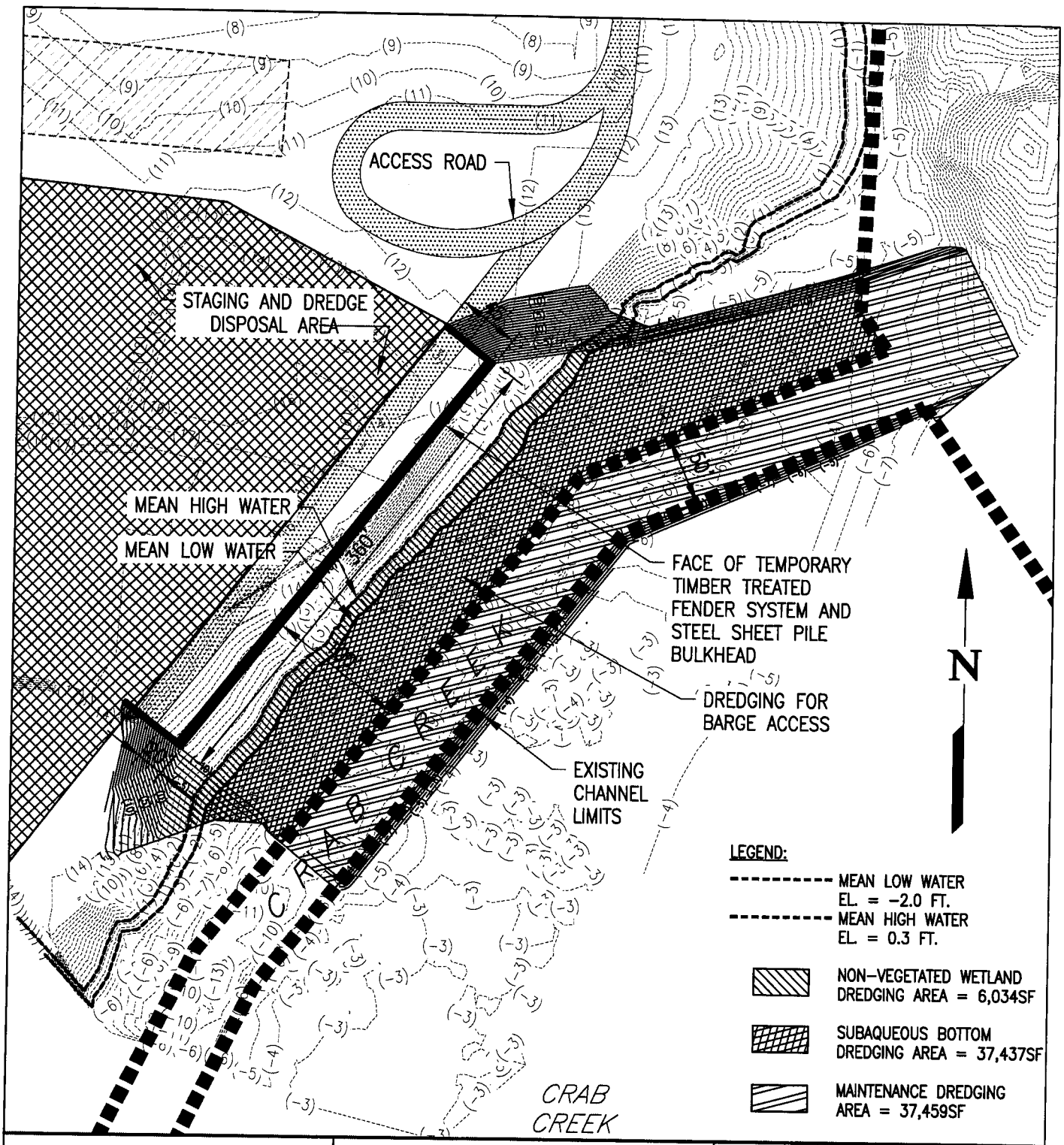

HORIZONTAL DATUM: VIRGINIA COORDINATE SYSTEM, SOUTH ZONE NAD83 (1993) VIRGINIA HARN.
VERTICAL DATUM: NAVD 88 (NORTH AMERICAN VERTICAL DATUM 1988).

CLARK • NEXSEN
Architecture & Engineering

DREDGE AREA PLAN VIEW

0 100' 200'

SCALE: 1"=100'

LESNER BRIDGE REPLACEMENT
CN PROJECT #:2100

DATE: OCTOBER 2012
IN: LYNNHAVEN INLET
CITY OF: VIRGINIA BEACH STATE: VA
APPLICATION BY: VIRGINIA BEACH PUBLIC WORKS
AGENT: CLARK NEXSEN
SHEET 17 OF 26

SKC-10A

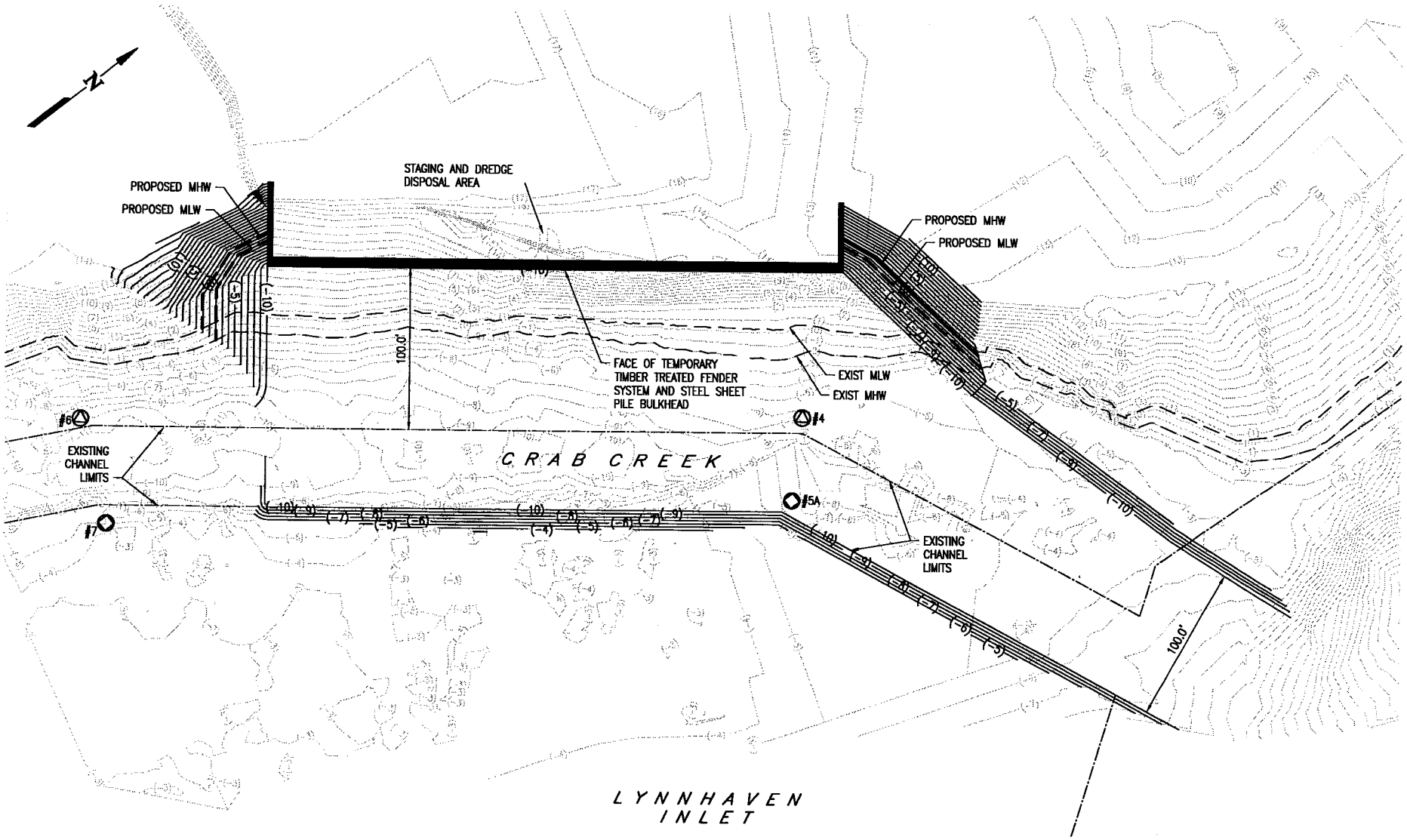

LEGEND

#4 RED BUOY

#5A GREEN BUOY

CLARK • NEXSEN
Architecture & Engineering

PROPOSED CONTOURS

0 40' 80'

SCALE: 1"=40'

LESNER BRIDGE REPLACEMENT
CN PROJECT #:2100

DATE: OCTOBER 2012
IN: LYNNHAVEN INLET
CITY OF: VIRGINIA BEACH STATE: VA
APPLICATION BY: VIRGINIA BEACH PUBLIC WORKS
AGENT: CLARK NEXSEN
SHEET 26 OF 26

SKC-16

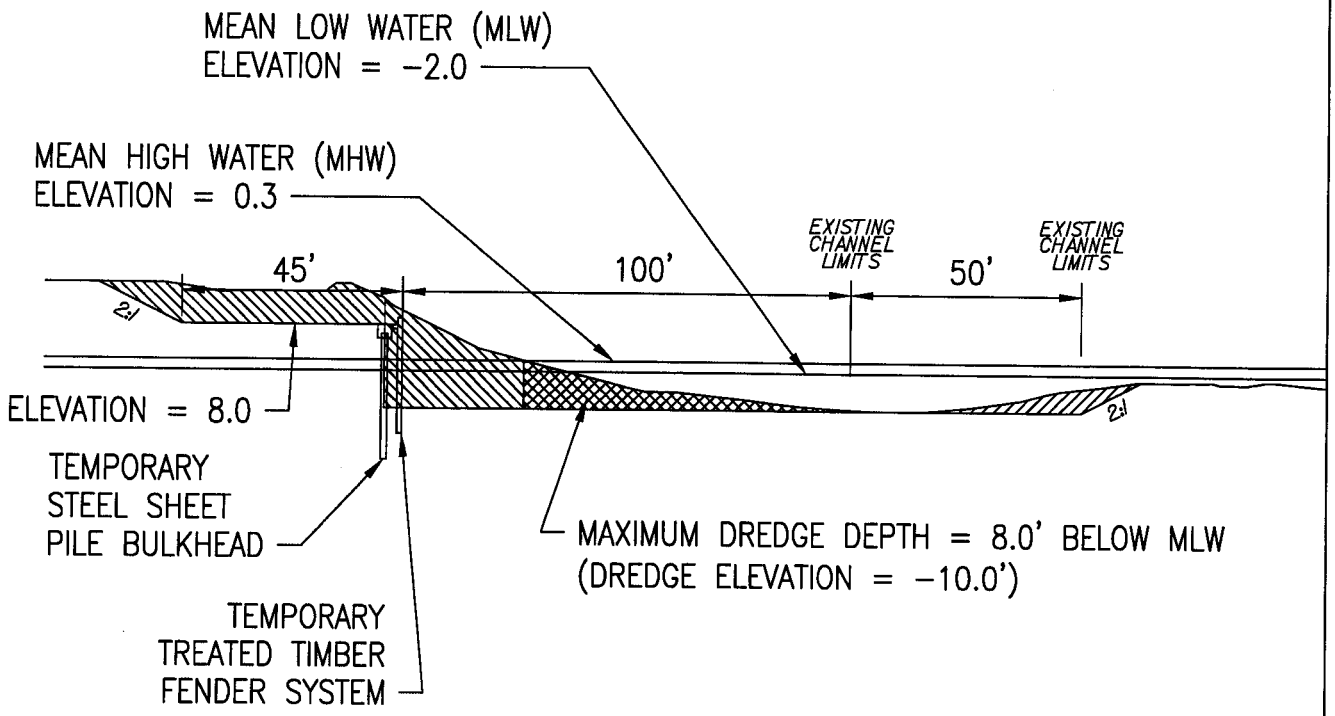

DREDGE QUANTITIES

EXCAVATION VOLUME = 10,200 CY

DREDGE VOLUME = 3,800 CY (INCLUDING 1,289 CY NON-VEGETATED WETLAND IMPACT AND 2,511 CY SUBAQUEOUS IMPACT)

PREVIOUSLY PERMITTED MAINTENANCE DREDGE VOLUME = 1,825 CY

TOTAL MATERIAL VOLUME = 15,825 CY

LEGEND

- EXCAVATION
- DREDGE
- PREVIOUSLY PERMITTED MAINTENANCE DREDGE (VMRC PERMIT #06-1128)

HORIZONTAL DATUM: VIRGINIA COORDINATE SYSTEM, SOUTH ZONE NAD83 (1993) VIRGINIA HARN.
VERTICAL DATUM: NAVD 88 (NORTH AMERICAN VERTICAL DATUM 1988).

CLARK • NEXSEN
Architecture & Engineering

CRAB CREEK TYPICAL SECTION

0 40' 80'

SCALE: 1"=40'

LESNER BRIDGE REPLACEMENT
CN PROJECT #:2100

DATE: OCTOBER 2012
IN: LYNNHAVEN INLET
CITY OF: VIRGINIA BEACH STATE: VA
APPLICATION BY: VIRGINIA BEACH PUBLIC WORKS
AGENT: CLARK NEXSEN
SHEET 18 OF 26

SKC-10B

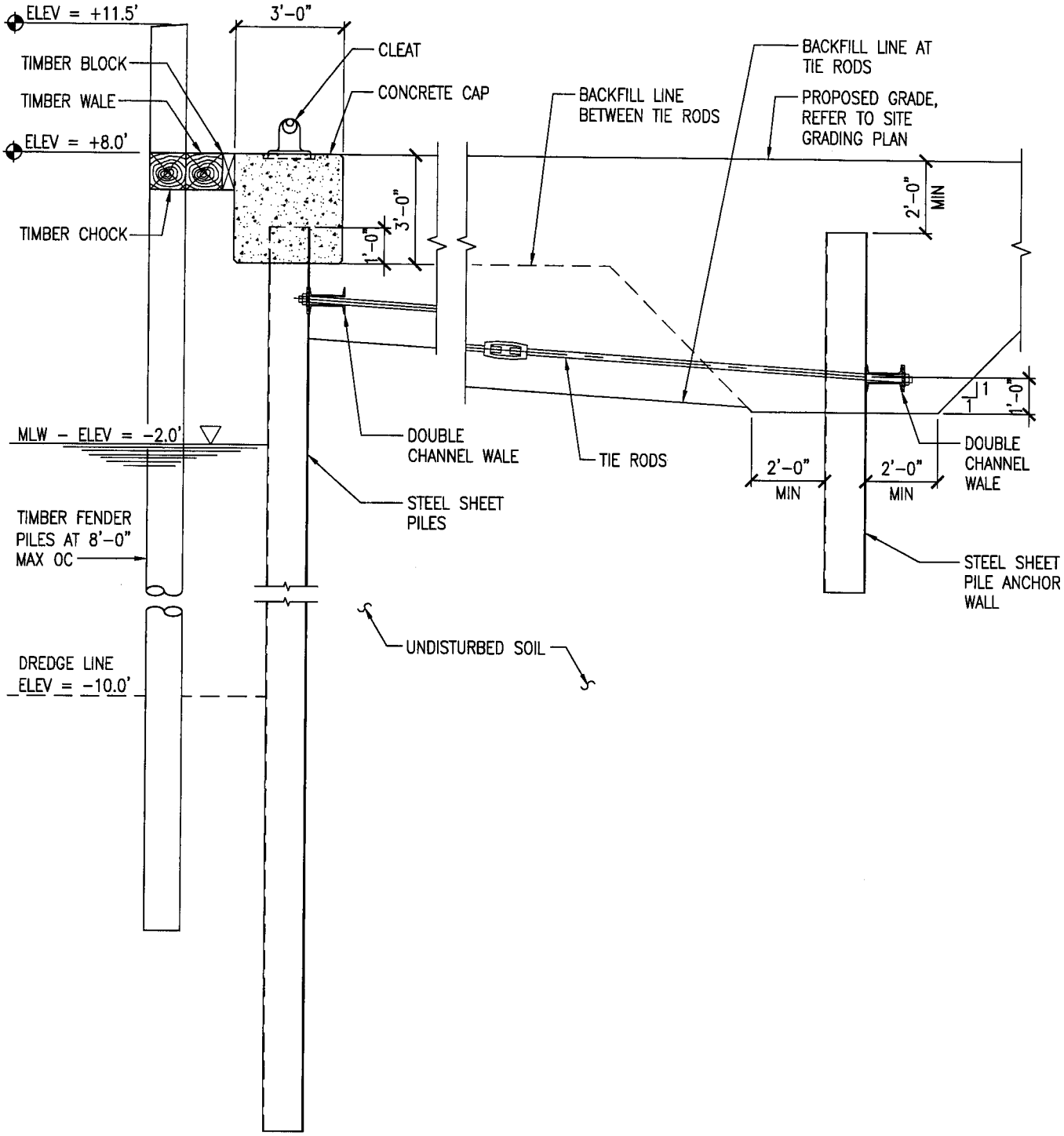

HORIZONTAL DATUM: VIRGINIA COORDINATE SYSTEM, SOUTH ZONE NAD83 (1993) VIRGINIA HARN. VERTICAL DATUM: NAVD 88 (NORTH AMERICAN VERTICAL DATUM 1988).

CLARK • NEXSEN
Architecture & Engineering

TEMPORARY BULKHEAD SECTION

0 1' 5' 10'

1/4" = 1'-0"

LESNER BRIDGE REPLACEMENT
CN PROJECT #:2100

DATE: OCTOBER 2012
IN: LYNNHAVEN INLET
CITY OF: VIRGINIA BEACH STATE: VA
APPLICATION BY: VIRGINIA BEACH PUBLIC WORKS
AGENT: CLARK NEXSEN
SHEET 25 OF 26

SKC-15

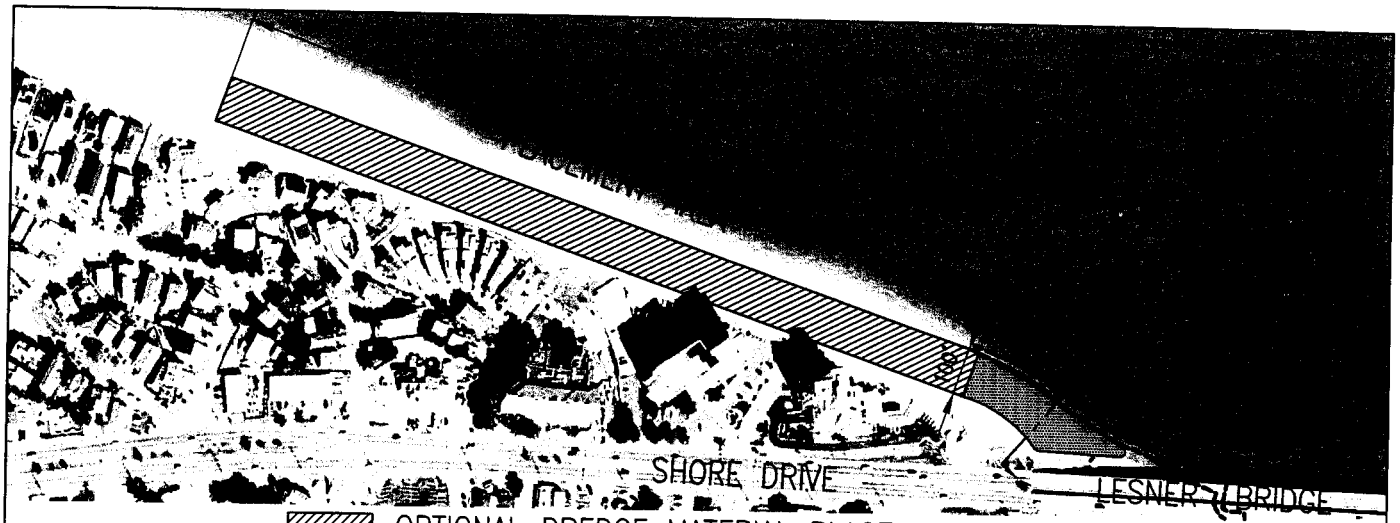

OPTIONAL DREDGE MATERIAL PLACEMENT AREA
(100' X 2,100' = 210,000 SF) = 5,830 CY

PREFERRED DREDGED MATERIAL PLACEMENT AREA = 2,700 CY

BEACH FILL AREA
1"=400'

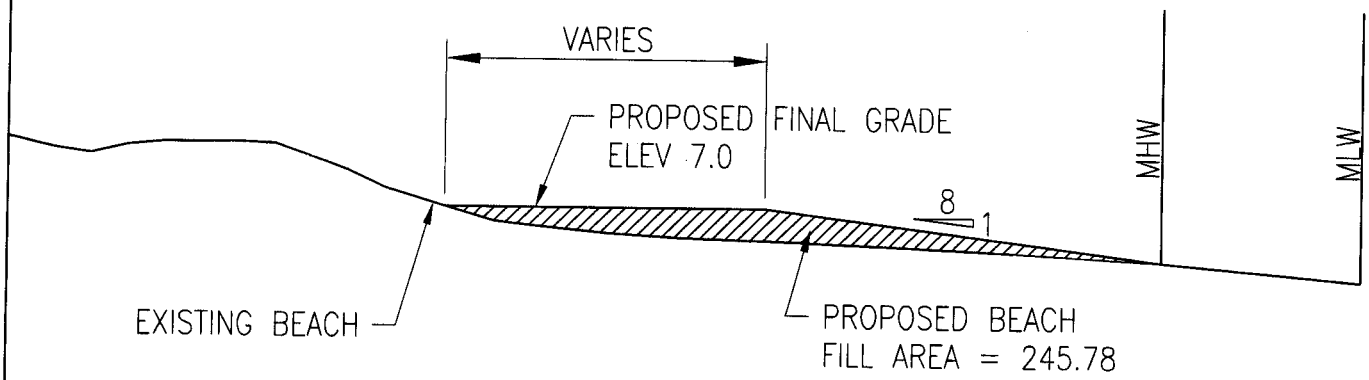

TYPICAL FILL SECTION 'A'
1"=25'

LEGEND:

---------- MEAN LOW WATER EL. = -2.0 FT.

---------- MEAN HIGH WATER EL. = 0.3 FT.

HORIZONTAL DATUM: VIRGINIA COORDINATE SYSTEM, SOUTH ZONE NAD83 (1993) VIRGINIA HARN. VERTICAL DATUM: NAVD 88 (NORTH AMERICAN VERTICAL DATUM 1988).

CLARK • NEXSEN
Architecture & Engineering

BEACH FILL AREA AND TYPICAL SECTION

0 200' 400'

SCALE VARIES

LESNER BRIDGE REPLACEMENT
CN PROJECT #:2100

DATE: AUGUST 2012
IN: LYNNHAVEN INLET
CITY OF: VIRGINIA BEACH STATE: VA
APPLICATION BY: VIRGINIA BEACH PUBLIC WORKS
AGENT: CLARK NEXSEN
SHEET 21 OF 21

SKC-11

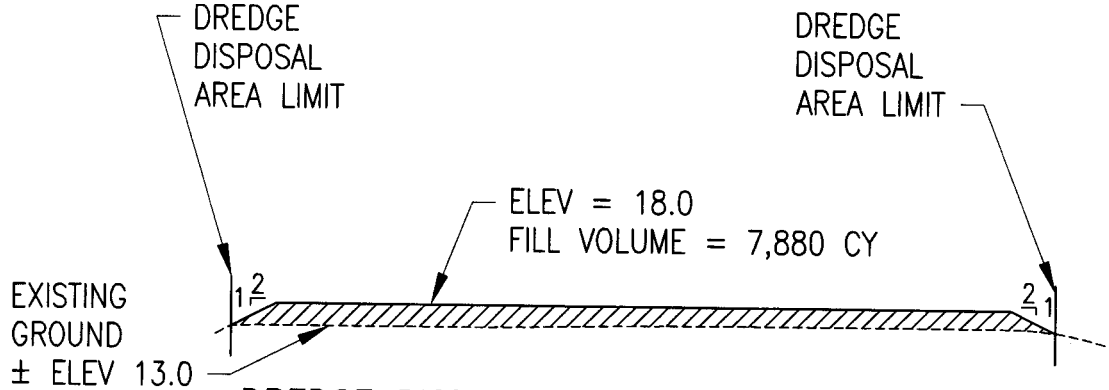

DREDGE DISPOSAL AREA TYPICAL SECTION 'A'

SCALE: 1" = 50'

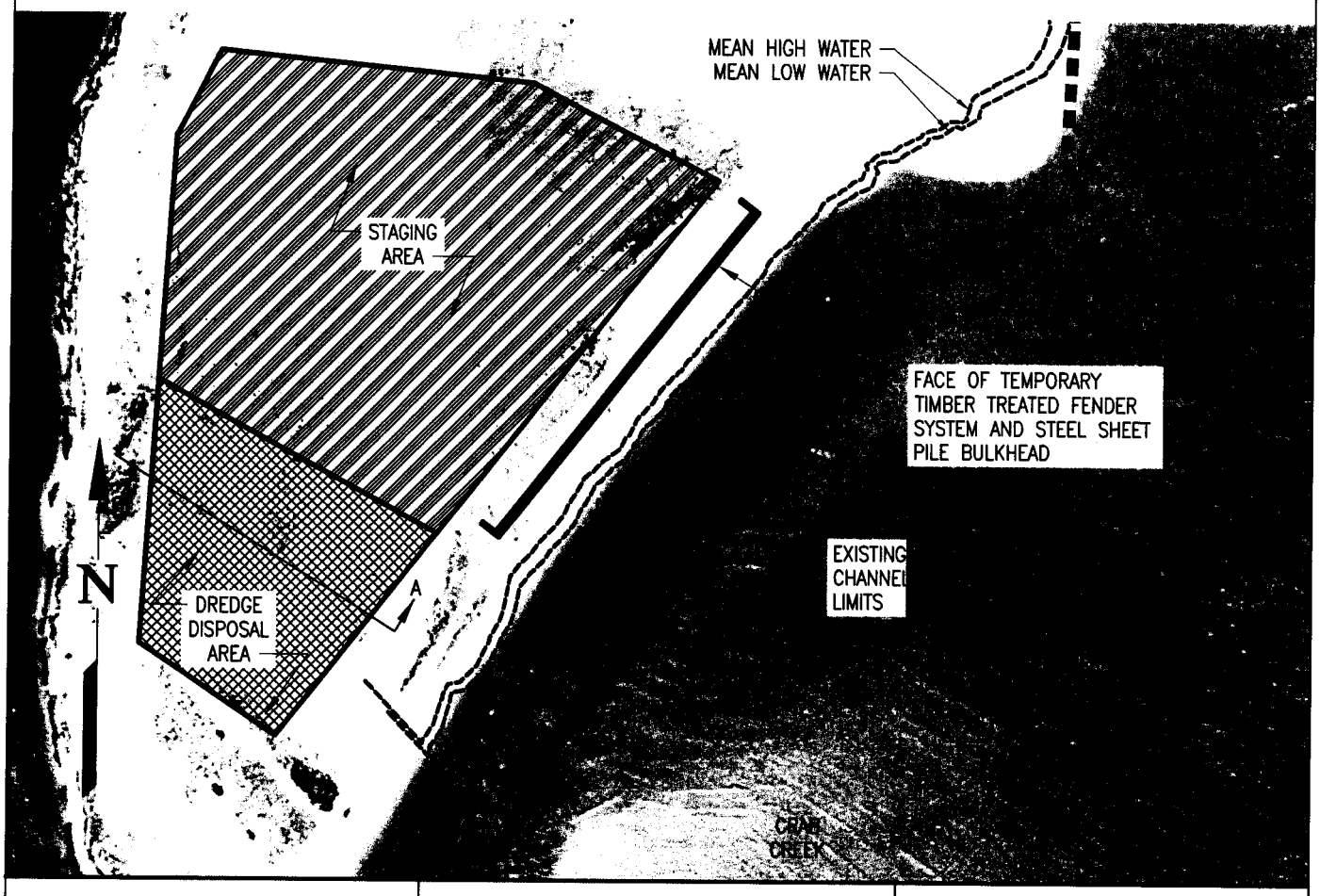

HORIZONTAL DATUM: VIRGINIA COORDINATE SYSTEM, SOUTH ZONE NAD83 (1993) VIRGINIA HARN. VERTICAL DATUM: NAVD 88 (NORTH AMERICAN VERTICAL DATUM 1988).

CLARK • NEXSEN

Architecture & Engineering

STAGING & DREDGE DISPOSAL AREA

0 150' 300'

SCALE: 1"=150'

LESNER BRIDGE REPLACEMENT
CN PROJECT #:2100

DATE: AUGUST 2012
IN: LYNNHAVEN INLET
CITY OF: VIRGINIA BEACH STATE: VA
APPLICATION BY: VIRGINIA BEACH PUBLIC WORKS
AGENT: CLARK NEXSEN
SHEET 20 OF 21

SKC-10D