Public Notice

U.S. Army Corps of Engineers, Norfolk District

CENAO-TS-REG

March 24, 2006

Wetland Hydrology Determinations

This public notice is directed to consultants, property owners, and developers who install and monitor shallow groundwater wells in the spring for the purposes of determining whether hydrology is present in a particular area in order to clarify the delineation of wetlands.

The Norfolk District Regulatory Branch has reviewed precipitation data for the period December 2005- March 2006 from a number of weather stations in Hampton Roads area. These data indicate that current and antecedent conditions are drier than typical and therefore are unreliable for well data monitoring for wetland determinations. Therefore, we would not consider 2006 well data by itself, to constitute conclusive evidence that a particular property in Hampton Roads vicinity is not a wetland. However, we will continue to make jurisdictional determinations based the Corps 1987 Manual evaluation of field indicators of vegetation, soils, and wetland hydrology.

When reviewing shallow well data in order to determine whether wetland hydrology is present, we consider cumulative precipitation totals for the 3-month period prior to well monitoring compared to the cumulative precipitation totals for typical conditions (determined to be between the 30th and 70th percentiles of monthly precipitation totals for a given weather station over a 30 year period). The distribution of rainfall events during this period is also an important consideration.

Any monitoring wells used to facilitate wetland hydrology determinations should be installed in accordance with the guidelines in *Installing Monitoring Wells/Piezometers in Wetlands*, ERDC TN-WRAP-00-02, U.S. Army Research and Development Center, Vicksburg, MS (attached). Before we will consider well data for a specified site, we require submittal and approval of a well monitoring plan, which includes a review of the location and installation of the monitoring wells. In addition, during the monitoring season (typically late February through April), the Corps must be allowed reasonable periodic checks without notice to provide proper quality assurance.

J. Robert Hume, III
Chief, Regulatory Branch

ERDC TN-WRAP-00-02
July 2000

Installing Monitoring Wells/ Piezometers in Wetlands

PURPOSE: Wetland scientists frequently need quantitative information about shallow groundwater regimes near wetland boundaries and in adjacent uplands. Monitoring wells and piezometers are some of the easiest means of determining depth and movement of water tables within and immediately below the soil profile. Most of the literature on monitoring wells and piezometers, however, deals with installation to depths greater than needed for wetland regulatory purposes.

This revision of the original 1993 technical note reflects increased experience gained over several monitoring years from around the nation in the USDA-NRCS Wet Soils Monitoring project (*http://www.statlab.iastate.edu/soils/nssc/globhome.html#project9*) and other wetland research efforts.[1] Significant changes from the original version include:

- Recommending that 15-in. wells be used to test whether the hydrologic regime meets the criteria for wetland hydrology.
- Listing documentation needs.
- Eliminating well points except with commercially manufactured, automatic recording wells.
- Recommending that a bentonite be used rather than grout in the annular space around the riser and at the ground surface.
- Using filter fabric when installation under water prevents use of a sand pack.
- Stating explicitly that these procedures are not applicable to soils with low bulk strength and lateral water flow, such as mucks or peats. If the bentonite seal and sand pack might interfere with monitoring objectives, procedures described by Cherry et al. (1983) should be considered.

BACKGROUND: Monitoring wells and piezometers are perforated pipes set vertically in the ground to intercept the groundwater passively (Figure 1).

- **Monitoring wells** have perforations extending from just below the ground surface to the bottom of the pipe. Water levels inside the pipe result from the integrated water pressures along the entire length of perforations.
- **Piezometers** are perforated only at the bottom of the pipe. They are usually installed with an impermeable bentonite seal above the perforated zone so water cannot flow down the outside of the pipe. Water levels inside the pipe result from the water pressure over the narrow zone of perforation at the bottom of the pipe.

---

1 The methods described herein do not apply to water-sampling studies. Researchers needing to sample water from wells should refer to U.S. Army Corps of Engineers (1990); American Society for Testing and Materials (1990); and Cherry et al. (1983).

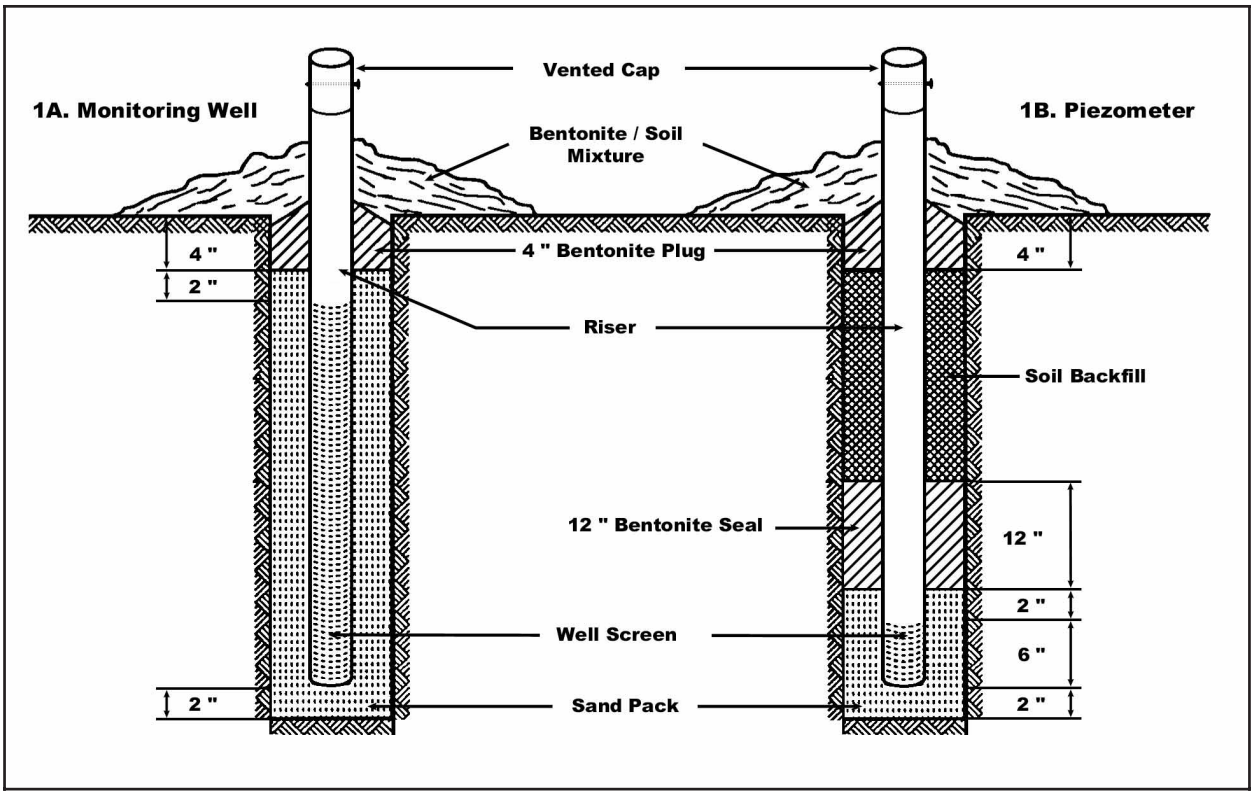

Figure 1. Schematic diagram of installed monitoring well and piezometer. A. Shallow monitoring well. B. Piezometer

Water levels in slotted pipes do not necessarily equate with the actual water table in the undisturbed soil. Instead, water levels in slotted pipes result from water pressures at the instrument:soil interface. Consequently, slotted pipes of different lengths can have differing water levels, despite the fact that they intercept the same body of groundwater. This distinction can be significant if the body of groundwater is moving upward or downward. If the body of water is moving upward, as in artesian flow, water pressures are greater at depth and decrease closer to the groundwater surface. Consequently, water levels will be higher in deep pipes than in shallow ones (Figure 2A). Conversely, in systems where water moves downward, water levels are lower in deep pipes and higher in shallow ones (Figure 2B).

Recent work in Illinois has shown that differences between water levels in 12- and 30-in.-long wells are on the order of centimeters rather than decimeters or millimeters,[1] and that these differences are more pronounced in soils that have been disturbed. Such differences can be significant for wetland delineation studies at the wetland boundary. See Table 1 for an example of water levels in 15- and 30-in. wells near the wetland boundary where water is flowing downwards.

1 Personal Communication, July 2000, James J. Miner, Geologist, Illinois State Geological Survey, Champaign, IL.

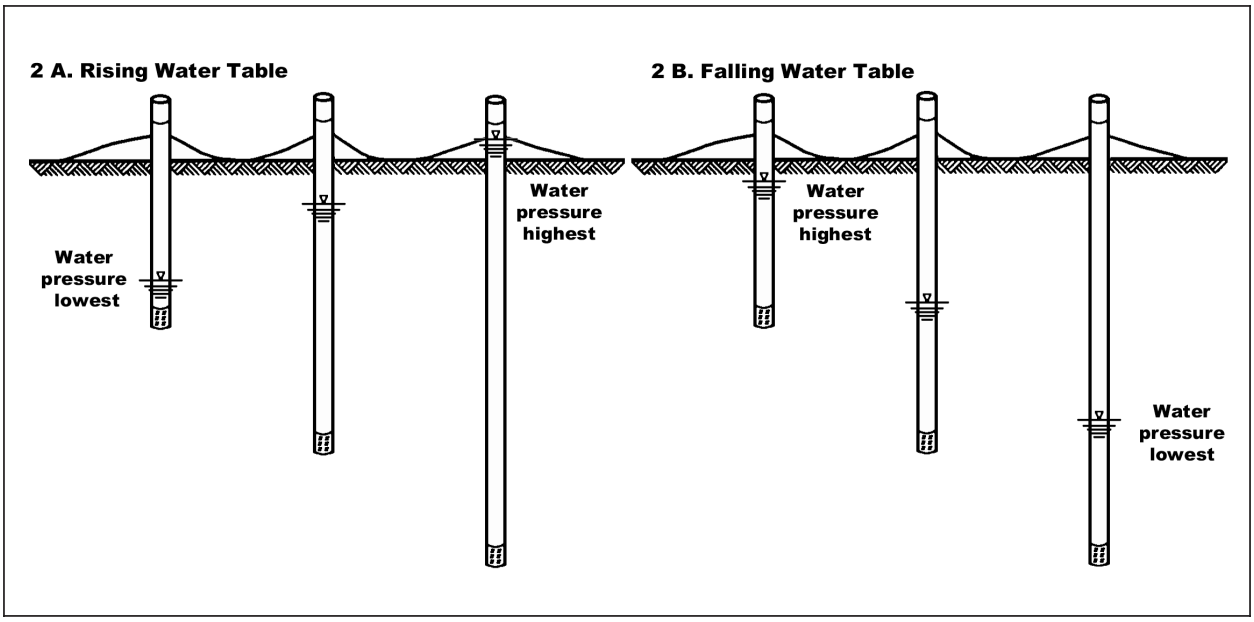

Figure 2. Example of water levels in piezometers. A. Water tables rising from below (artesian or discharge system). B. Water tables dropping from above (recharge system)

Table 1
Example of Water Well Readings in Shallow and Deep Wells with Downward Water Flow

Depth of Slotted Screen	Water Level Inside Instrument	Above Critical Depth for Wetland Hydrology?
15-in. well	11 in.	Yes
30-in. well	13 in.	No

These two wells are probably measuring hydrostatic pressures in the same body of groundwater. The net flow is downward. Assume that the data from either of these two wells were used alone to assess whether wetland hydrology criteria were met. Using the deep well, the evaluator would have to tally the data as being below the 12-in. threshold for wetland hydrology; using the shallow well, however, the evaluator would have to tally the data as being above the 12-in. threshold. The 2-in. (5-cm) difference is within the range of actual differences found in the field.

In borderline situations such as this, 15-in. wells should be included in the study design unless differences between readings in shallow and deep wells are smaller than the precision of data interpretation. In Table 1, the shallow wells are redundant to the deep wells if water levels are interpreted with a precision of ± 2 in. However, if water levels are interpreted with greater precision, the shallow wells provide important additional information.

SELECTING INSTRUMENTATION: It is vital to define study objectives before buying and installing instruments in order to avoid gathering unnecessary or meaningless data. Common study purposes are wetland determination, wetland delineation, determination of whether a wetland is a recharge or discharge system, and determination of water flow paths in the landscape.

Wetland Determination. When determining whether criteria for wetland hydrology or hydric soils are met at a point on the landscape, there are usually three objectives. Table 2 summarizes the instruments required for three different scenarios.

Table 2
Water Table Monitoring Objectives and Instrumentation for Three Scenarios of Perching

Objective	Instrument		
	Scenario 1: Degree of Perching Uncertain; Discharge or Recharge Systems (e.g., most wetland fringes)	**Scenario 2: Shallow Water Table Perched within Depth of Monitoring (e.g., soils w/clay textures throughout or clay-rich horizons)**	**Scenario 3: Shallow, Static Water Table or Water Flow is Lateral (e.g., tidal marsh or flow-through wetland)**
Objective 1: Determine timing, duration, and frequency that water tables are shallower than threshold depths for wetland criteria	15-in. well	15-in. well	Well to greatest depth of interest, usually less than 48 in.
Objective 2: Determine timing, duration, and frequency that water tables are near threshold depths for wetland criteria	Well to greatest depth of interest; install well to top of perching layer if perching is proven	Well to top of perching zone	Well to greatest depth of interest, usually less than 48 in.
Objective 3: Determine timing, duration, and frequency that water tables are considerably deeper than critical depths	Well to greatest depth of interest, usually less than 48 in.; per Scenario 2 if perching is proven	Piezometers within and below impermeable layer	Well to greatest depth of interest, usually less than 48 in.
Summary of Instruments	15-in. well and deep well	15-in. well and piezometers in and below perching zone	One deep well; if soil is unconsolidated, consider methods of Cherry et al. (1983)

For Scenario 1 (Table 2), both 15-in. and deep wells should be installed unless local experience indicates that the shallow ones provide no additional information. The financial stakes of most regulatory investigations will usually be much greater than the very small additional investment of time and money needed to install, read, and maintain the shorter wells. If it is documented that a single deep instrument will meet all three objectives (Table 2), the shallower instruments can be dispensed with. It may not be necessary to install both shallow and deep wells at every monitoring station around a wetland. The number and depths of deep and shallow wells should be determined beforehand by all parties involved in the project to avoid later contention.

When installing very shallow monitoring wells, be aware of their physical instability. Shallow wells may need to be reinstalled more frequently than deeper ones.

Wetland Delineation. To identify the location of the boundary between wetlands and non-wetlands, install sets of instruments along transects perpendicular to the expected wetland boundary. The same combinations of instruments that were recommended for wetland determination should be installed at each point along the transect. Shallow wells can be dispensed with in obvious wetlands and in obvious non-wetlands, but usually they are necessary close to the wetland boundary.

Recharge Versus Discharge Determination. Sets of piezometers at different depths are needed to determine direction of water flow (upward or downward) at any point in a wetland (Figure 2). The exact depths of piezometers will vary from site to site, depending on stratigraphy and topographic position. In soils with large differences in permeability, piezometers should be placed on top of, within, and below suspected perching layers to test whether the suspect layers actually impede water flow. Unusually permeable layers, such as sand lenses, should always be instrumented.

Determine Water Flow Paths in a Landscape. Sets of piezometers are located both up- and down-gradient along suspected water flow paths (Warne and Smith 1995).

CONSTRUCTION OF PIEZOMETERS AND SHALLOW MONITORING WELLS

Well Stock. Shallow monitoring instruments should be made from commercially manufactured well stock. Schedule 40, 1-in.-diam PVC pipe is recommended. This diameter pipe allows sufficient room for sampling while minimizing sampling volume and size of bentonite seal in the bore hole. Larger diameter pipes can be substituted when needed, as with automated samplers.

Well Screen. Use 0.010-in.-wide slots and 20-40 sand (see section on sand pack below). For shallow wells, the slotted screen should extend from approximately half a foot below the ground surface down to the bottom of the well (Figure 1A). For piezometers, the well screen is usually the bottom 6 in. of the pipe (Figure 1B).

One problem with use of commercial well screen for very shallow monitoring wells and piezometers is that there often is a length of unslotted pipe and joint or threads below the screen. In shallow monitoring situations this extra length often must be extended into an underlying soil horizon that should be left undisturbed. In combination with a commercial well point, this extra length also provides a reservoir where water can remain trapped after the outside groundwater has dropped, making readings difficult to interpret during water table drawdown. To avoid these problems, cut commercial well screen to the desired length within the slotted portion of the pipe (Miner and Simon 1997). Glue a PVC cap at the bottom of the screen and drill a small vent hole in the bottom cap (Figure 3).

Riser. The riser is the unslotted PVC pipe that extends from the top of the well screen to above the ground surface (Figure 1). The riser should extend far enough above ground to allow easy access but not so high that the leverage of normal handling will break below-ground seals. Nine to twelve inches is usually sufficient. A greater length of riser above the ground may be needed on sites that are inundated regularly or where automatic recording devices are used.

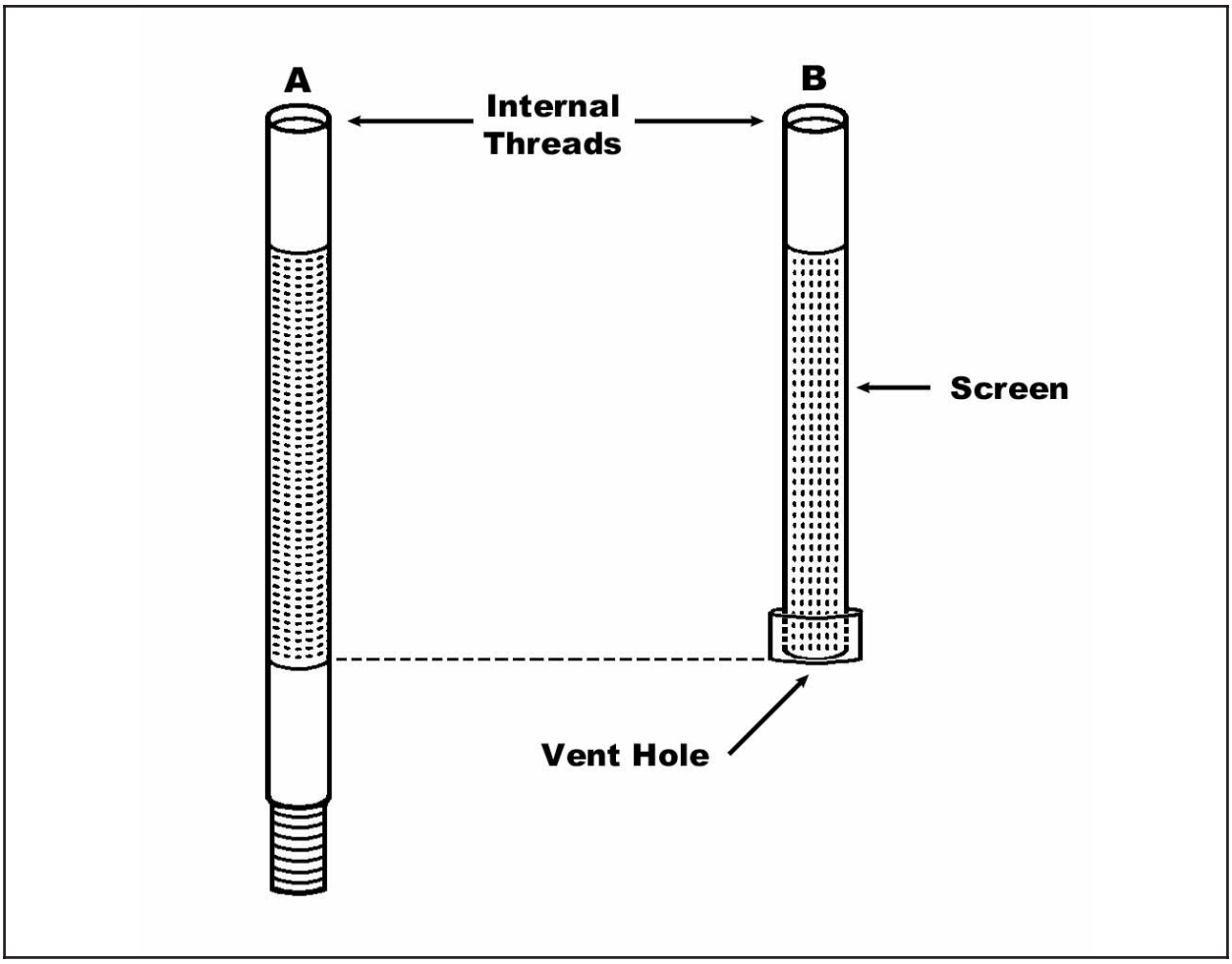

Figure 3. Modified commercial well screen. A. Commercial well screen with threads at both top and bottom. B. Screen after sawing lower threaded portion of pipe off and closing with vented PVC plug

Well Cap. Well caps protect wells from contamination and rainfall. Caps need to be attached loosely enough that they can be removed without jostling the riser. Well caps can be constructed from PVC pipe as shown in Figure 4. The homemade cap can be attached to the riser by drilling a hole through both the cap and the riser and connecting the two with a wire lock pin. Well caps should be made of materials that will not deteriorate in sunlight or frost.

A common problem with commercially made well caps (threaded or unthreaded) is that the cap may seize to the riser and require rough handling to remove. This is likely to break the seal between the riser and the ground, especially in shallow wells. If commercially made well caps are used, they should be modified to prevent such snug fits. All caps should be vented to allow equilibration of air pressure inside and outside of the riser.

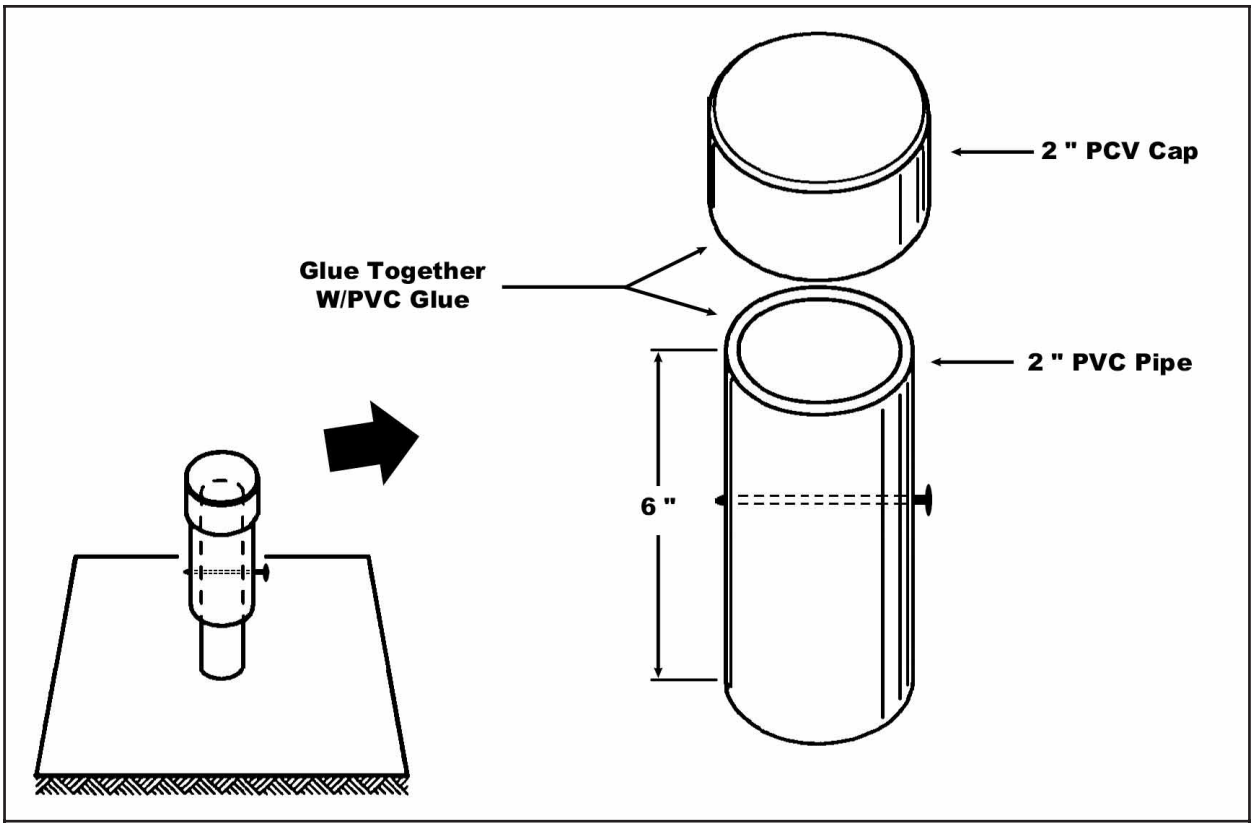

Figure 4. Homemade cap made from oversize PVC piping

Well Point. Commercial PVC well points are not needed if the bottom of the screen is capped. A PVC cap glued on the bottom of the slotted portion of the screen keeps out sand and has the advantage of being shorter than most commercial well points (Figure 3).

Sand Pack. Sand is placed around the slotted interval to filter out silts and clays (Figure 1). Silica sand is available from water-well supply houses in uniformly graded sizes. Sand that passes a 20-mesh screen and is retained by a 40-mesh screen (20-40 sand) is recommended with 0.010-in. well screen; finer sized 40-60 grade sand is appropriate for use with 0.006-in. screen. The finer sand and screen should be used to pack instruments in dispersive soils with silt and fine silt loam textures.

The sand pack may need to be dispensed with in permanently saturated soils that have little strength, such as peats or mucks. The methods of Cherry et al. (1983) should be used in such situations. Sand packs and bentonite simply slough down the sides of the pipe and into the surrounding muck in such soils.[1]

Bentonite Sealant. Bentonite is a clay that absorbs large quantities of water and swells when wetted. It is used in well installation to form a tight seal around the riser to prevent water from running down the pipe to the well screen. With this protective plug, only groundwater enters the slotted well screen.

1 Personnal Communication, 2000, D. L. Siegel, Syracuse University.

Four inches of bentonite are placed around the riser immediately below the ground surface when installing either monitoring wells or piezometers (Figures 1A and 1B). This 4-in. ring of bentonite rests directly on top of the sand pack around the well screen for monitoring wells, and rests on top of the backfill of soil tamped into the annular space of the auger hole for piezometers. The top of the bentonite plug should be shaped to slope away from the riser so that water will run away from the pipe rather than pond around it at the ground surface.

A minimum of 12 in. of bentonite clay is placed around piezometers above the sand filter as a sealant (Figure 1B). This prevents water flow along the sides of the pipe from the ground surface and through channels leading to the pipe. It is critical that piezometers have an effective bentonite seal above the sand pack in layered or structured soils.

Bentonite is available from well-drilling supply companies in either powder, chip, or pellet form. Chips or pellets are easier to use in the field than powder. They can be dropped directly down the annular space above the sand filter and gently tamped into place. If this zone is already saturated with water, the chips will absorb water in place, swell tight, and seal off the sand filter from the annular space above. If the bentonite chips are dropped into a dry annular space, they should be packed dry and water should be added down the annular space so the clay can swell shut.

Cracks are inevitable in clayey soils with high shrink-swell activity. In these soils three piezometers should be installed as replicates for each depth of instrumentation. If readings are questionable, move some yards away from the instrument site, auger to the depth in question, and evaluate whether free water is present at the depth of the well screen.

Filter Socks. Filter socks are tubes of finely meshed fabric that can be slipped over the screened end of a well to filter out silt and clay particles. They are not necessary if a sand pack is used and the pipe is capped at the bottom. Filter socks are recommended only when it is impractical to install a sand pack, such as in permanently saturated organic soils. Filter socks are available from engineering and water-well supply houses.

INSTALLATION OF SHALLOW MONITORING WELLS AND PIEZOMETERS

Soil Profile Description. The soil profile must be described and evaluated before installation of an instrument in order to identify strata that can alter vertical and horizontal water flows. Profile descriptions should include horizon depths and information about texture, induration, bulk density, redoximorphic features, and roots, so that significant differences in permeability can be inferred (Figure 5). Once potential aquitard horizons have been identified in the soil, appropriate lengths and depths of well screen can be determined. The importance of onsite soil characterization to determine the appropriate well depths cannot be overemphasized.

Several soil characteristics may indicate that vertical water flow is impeded and that perched water tables exist. Features to watch for include the following:

- Sudden change from many roots to few or no roots.
- Sudden change in sand or clay content.
- Sudden change in ease of excavation.

Soil Features[1] Used to Identify Horizons with Different Permeabilities							
Horizon Depths	Matrix Color	Texture	Redoximorphic Features	Structure	Consistence	Induration (none, weak, strong)	Roots

[1] Soil Survey Division Staff (1993).

Figure 5. Sample soil characterization form

- Sudden change in water content, such as presence of saturated soil horizons immediately above soil horizons that are dry or barely moist.
- Redoximorphic features at any of the distinct boundaries listed above.

Installation of Shallow Monitoring Wells (Figure 1A).

1. Auger a hole in the ground with a 3-in. bucket auger to a depth approximately 2 in. deeper than the bottom of the well. Be sure the auger hole is vertical.

2. Scarify the sides of the auger hole if it was smeared during augering.

3. Place 2 in. of silica sand in the bottom of the hole.

4. Insert the well into the hole but not through the sand

5. Pour and gently tamp more of the same sand in the annular space around the screen and 2 in. above the screen.

6. Pour and gently tamp bentonite above the sand to the ground surface. Shape the surface of this plug so that water will not pond around the riser.

7. Form a mound of a soil/bentonite mixture at the top of the ground around the base of the riser to direct surface water flow away from the pipe.

Piezometers. Installation of a piezometer entails the same steps as above, with the modifications that 12 in. of bentonite are placed above the sand pack and water is added to expand the clay and form a seal (Figure 1B). Backfill and tamp soil into the auger hole from the top of the bentonite plug to within 4 in. of the soil surface. Place a second plug of bentonite at the ground surface per Instruction 6 immediately above.

Equipment. Equipment needs vary with depth and diameter of instruments to be installed. This list of equipment is sufficient to install monitoring wells and standard piezometers to 10 ft or shallower.

Bucket auger 2 in. wider than the OD of the pipe being installed
Auger extensions

Pipe wrenches for auger extensions
Color book and soil description forms
Piezometer or well
Water level reading device (see below)
Tamping tool (0.5-in.-thick lath works well to 4 ft; 0.5-in.-diam metal pipe for greater depths)
Bentonite chips
Commercial grade silica sand
Steel tape long enough to measure deepest hole
Paint marker to label pipes
Hand pump to pump water from well and check for clogging
Survey equipment of sufficient accuracy to measure elevations required for study purposes

Checking for Clogged Pipes. After the pipe has been installed, either pump the well dry and monitor how quickly water levels return to the pre-pumped level; or if the pipe is dry, fill it with water and monitor rate of outflow. Water levels in wells should return at approximately the same rate as they would in freshly dug holes without any pipe. If water levels do not return to pre-pumped levels, pull the instrument out and determine why it is plugged. This test should be performed every few months throughout the study, because wells can plug due to bacterial growth as well as slumping of dispersive soil.

Elevations. Most methods of determining water levels in pipes entail measurement from the top of the riser to the water surface in the pipe. Therefore, a correction must be made for the difference between riser elevation and ground elevation. If study objectives require comparing water levels in different pipes, then relative elevations of pipes also need to be surveyed in.

Record the height of the riser above the ground surface at the time of installation and every few months thereafter. Pipes tend to move upward during cycles of wetting and drying. If marking the side of the pipe for future reference, use a paint marker; paint lasts longer than permanent marking ink.

Foot Traffic from Study Personnel. Microtopography and shallow soil properties can be altered in wetlands when foot paths are worn into the ground during the wet season. This can even puddle the soil around a shallow well if it is visited numerous times when saturated. It may be necessary to install boardwalks between instruments at long-term study sites.

Concrete Pads. Some localities require that monitoring wells be installed with concrete pads to protect drinking water sources from surface runoff. Local regulations should be observed at all sites. Concrete pads should not be used with shallow monitoring wells because pads of the required size probably interfere with water infiltration into the soil immediately around the shallow well.

Vandalism. Vandalism often cannot be avoided. Three approaches to the problem are (1) to hide the wells, (2) to armor them, or (3) to post them with identifying signs. All three approaches have worked in different communities. Pipes cannot be protected in all situations. Extra wells, installation equipment, and accessories should be brought along on monitoring trips so that vandalized instruments can be replaced.

READING WATER LEVELS: Water levels can be read with a steel measuring tape marked with a water-soluble marker. The only equipment needed is the tape, marker, and a rag to wipe the tape dry after each reading. Height of riser above the ground surface should be noted every time the instrument is read because pipes may move as much as 3 in. in a season.

One commonly used device (pair of wires, battery, open electric junction, and light or meter) is an open electric circuit that is completed when the junction makes contact with water. If using such a device, be aware that flexible wire will give a less accurate measurement than a rigid tape. Do not read water levels with a dowel stick because of the large displacement of the volume of the dowel.

Frequency of reading will depend on study purposes and rate of water table fluctuation. Water levels should be checked weekly or more often during the season of high water tables. More frequent readings may be needed in flashy systems, such as sandy floodplains of small streams or tidal areas. For long-term studies it usually suffices to collect data every other week during most of the year and every week to every day during water table rise or drawdown.

Automatic recording devices record water levels with down-well transducers or capacitance-based sensors. These cost much more than manually read instruments but may be necessary for some studies. Because automatic devices may be reused for several projects, cost estimates should be prorated over their expected life rather than assigned only to one study. Automatic recorders may be less expensive than travel costs and salaries if study objectives require frequent readings at remote sites. The credibility of monitoring results is enhanced by the high frequency of readings allowed by automatic wells. Automatic water-level recorders should be checked every few months and recalibrated as necessary.

Documentation. The form in Figure 6 solicits information necessary to document study design in most wetland regulatory situations. Figure 7 can be used when reading water levels manually. Figure 8 provides one possible format for reporting water levels, soil profile, growing season dates, and precipitation data in one graph. An effort should be made to acquire precipitation data from nearby weather stations and interpret the data with respect to long-term ranges of normal (Sprecher and Warne 2000).

POINTS OF CONTACT: For additional information, contact Steven W. Sprecher, USACE Detroit District, South Bend Field Office, 2422 Viridian Drive, Suite 101, South Bend, IN 46628 (219-232-1952) or the Manager of the Wetlands Regulatory Assistance Program, Dr. Russell F. Theriot (601-634-2733, *therior@wes.army.mil*). This technical note should be cited as follows:

> Sprecher, S. W. (2000). "Installing monitoring wells/piezometers in wetlands," *WRAP Technical Notes Collection* (ERDC TN-WRAP-00-02), U.S. Army Engineer Research and Development Center, Vicksburg, MS. *www.wes.army.mil/el/wrap*

Installation Data Sheet

Project Name *Alpha Project* Date of Installation *9/9/99*
Project Location *Beta Place* Personnel *J Doe*
Well Identification Code *A-15* *J Bloe*
Attach map of project, showing well locations and significant topographic and hydrologic features.
As appropriate, attach map of well site, showing locations and ground elevations of all instruments and microtopographic features of significance, with respect to reference datum.

Type of Instrument
Source of instrument / well stock *Acme Well Company*
Material of well stock *Schedule 40 PVC* Diameter of pipe *1 inch*
Slot size *0.010 inch* Slot spacing *0.5 inch*
Kind of well cap *homemade PVC w/vent* Kind of end plug *1" plug, vented*
Nature of Installation Materials
Nature of packing sand *20-40 silica* Kind of bentonite *chips*
Nature of backfill *bentonite/soil mix* Depth of backfill *6 in to ground surface*
Was bentonite installed below groundwater depth at installation? *NA*
Was water added to bentonite for expansion? *NA*
Method of measuring water levels in instrument *steel tape and soluble marker*
How was instrument checked for clogging after installation? *Water poured down well and drainage monitored. No water standing in well after 20 minutes.*

Instrument Diagram

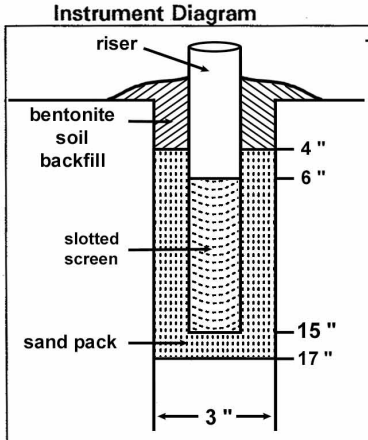

Soil Characteristics

	Texture	Structure	Roots	Consis-tence	Redox Features
+ 9 " – 0 "	*silt loam*	*strong granular*	*many medium*	*very friable*	*none*
0 " – 6 "	*silt loam*	*weak sub-angular blocky*	*common*	*friable*	*2.5Y5/1 matrix common Fe-concentrations*
6 " – 18 "	*silty clay loam*	*moderate blocky*	*few fine*	*very firm*	*10YR 4/1 matrix many Fe-concentrations & depletions*
18 " – 36 "	*silty clay loam*	*weak sub-angular blocky*		*very firm*	*10YR 5/1 matrix common Fe-concentrations & depletions*

Show depths (heights) of soil horizons, riser, screen, sand pack, bentonite, backfill, mound, etc.

A. Example filled out

Figure 6. Sample installation data form (Continued)

Installation Data Sheet

Project Name _____ Date of Installation_____
Project Location _____ Personnel _____
Well Identification Code_____ _____
Attach map of project, showing well locations and significant topographic and hydrologic features.
Attach map of well site, showing locations and ground elevations of all instruments and microtopographic features of significance, with respect to reference datum.

Type of Instrument
Source of instrument / well stock _____
Material of well stock _____ Diameter of pipe _____
Slot size _____ Slot spacing
_____
Kind of well cap _____ Kind of well point / end plug _____
Nature of Installation Materials
Nature of packing sand _____ Kind of bentonite _____
Nature of backfill _____ Depth of backfill _____
Was bentonite installed below groundwater depth at installation? _____
Was water added to bentonite for expansion? _____
Method of measuring water levels in instrument _____
How was instrument checked for clogging after installation? _____
_____

Instrument Diagram **Soil Characteristics**

	Texture	**Structure**	**Roots**	**Consis-Tence**	**Redox Features**

Show depths (heights) of soil horizons, riser, screen, sand pack, bentonite, backfill, etc.

B. Blank master

Figure 6. (Concluded)

Water Level Record
Project Name _____

Well ID Code _____

Date / Time	Height of Riser Above Ground	Depth to Water From Top of Riser	Water Level Below Ground	Comments (pipe checked for clogging? pipe checked for movement? vandalism? well cap missing? raining? etc.)

Figure 7. Sample water level record

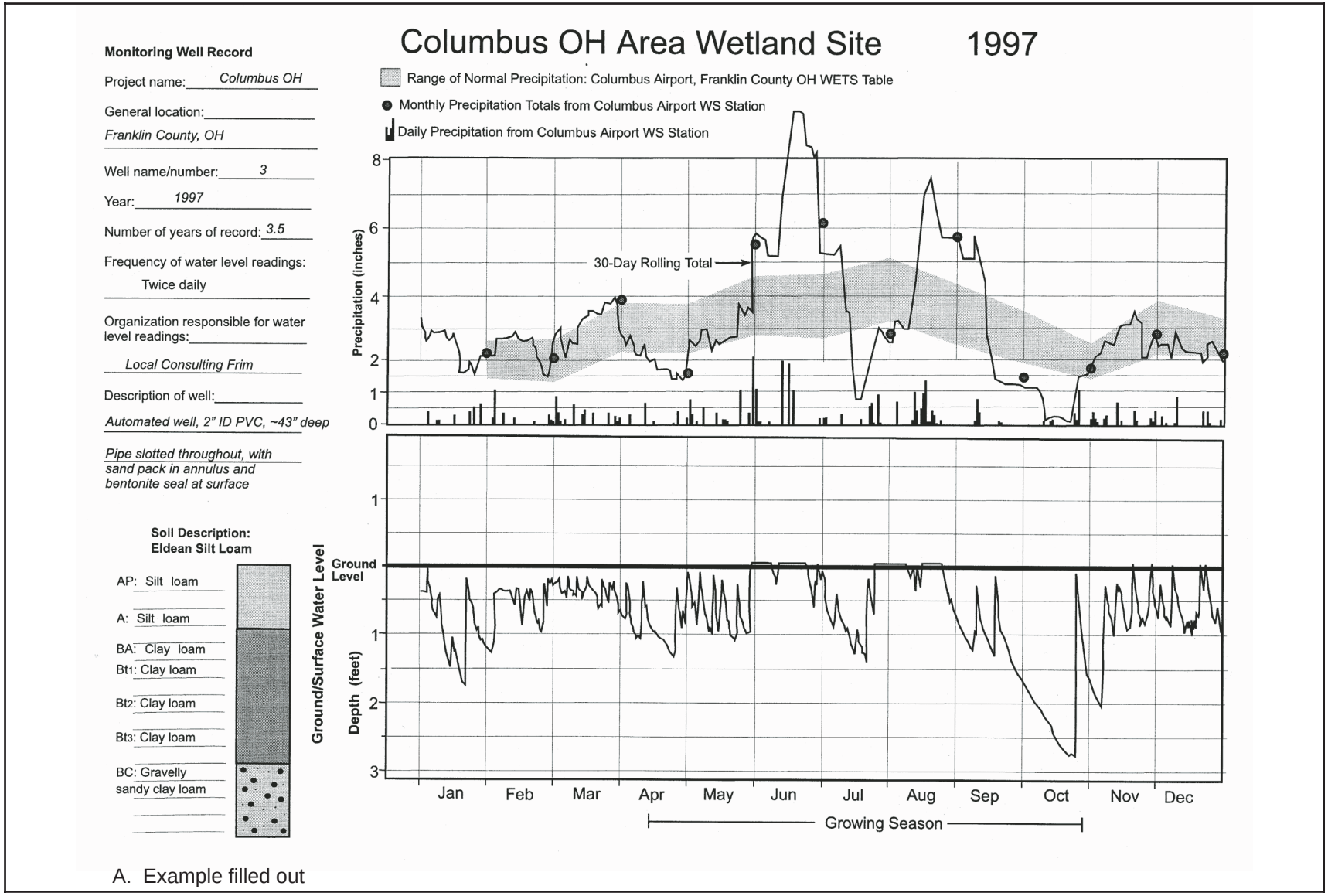

A. Example filled out

Figure 8. Sample graph for reporting water levels (Continued)

Monitoring Well Record

Project name:_____

General location:_____

_____

Well name/number:_____

Year:_____

Number of years of record:_____

Frequency of water level readings:

_____

Organization responsible for water level readings:_____

_____

Description of well:_____

_____

_____

Soil Description:

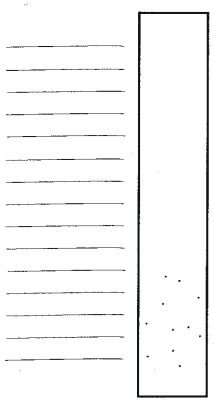

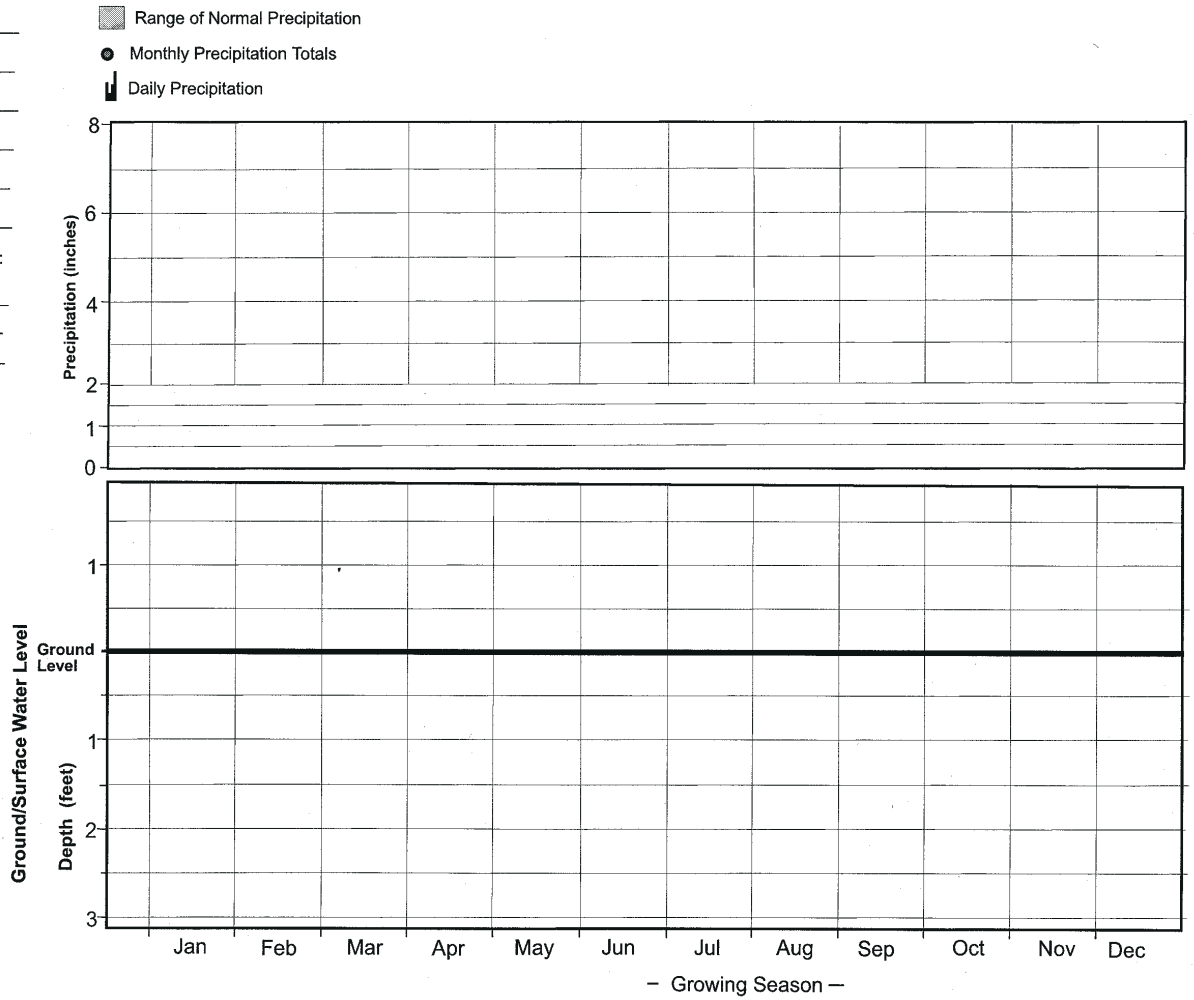

B. Blank master

Figure 8. (Concluded)

REFERENCES

American Society for Testing and Materials. (1990). "Standard practice for design and installation of ground water monitoring wells in aquifers," Designation: D5092-90, Philadelphia, PA.

Cherry, J. A., Gillham, R. W., Anderson, E. G., and Johnson, P. E. (1983). "Migration of contaminants in groundwater at a landfill: A case study: 2. Groundwater monitoring devises," *J. of Hydrology* 63, 31-49.

Miner, J. J., and Simon, S. D. (1997). "A simplified soil-zone monitoring well," *Restoration and Management Notes* 15(2), 156-160.

Sprecher, S. W., and Warne, A. G. (2000). "Accessing and using meteorological data to evaluate wetland hydrology," ERDC/EL TR-WRAP-00-1, U.S. Army Engineer Research and Development Center, Vicksburg, MS.

Warne, A. G., and Smith, L. H. (1995). "Framework for wetland systems management. Earth resources perspective," WRP Technical Report WRP-SM-12, U.S. Army Engineer Waterways Experiment Station, Vicksburg, MS.

U.S. Army Corps of Engineers. (1990). "Monitor well installation at hazardous and toxic waste sites," Engineer Circular 1110-7-1(FR), Washington, DC.

BIBLIOGRAPHY

Aller, L., Bennett, T. W., Hackett, G., Petty, R. J., Lehr, J. H., Sedoris, H., and Nielsen, D. M. (1990). *Handbook of suggested practices for the design and installation of ground-water monitoring wells*. National Water Well Association, Dublin, OH.

Driscoll, F. (1986). *Ground water and wells.* Johnson Division, St. Paul, MN.

Gamble, E. E., and Calhoun, T. E. (1979). "Methods of installing piezometers for soil moisture investigations," U.S.D.A. Soil Conservation Service, unpublished technical note.

U.S. Environmental Protection Agency. (1975). "Manual of water well construction practices," Office of Water Supply, EPA-570/9-75-001.

NOTE: *The contents of this technical note are not to be used for advertising, publication, or promotional purposes. Citation of trade names does not constitute an official endorsement or approval of the use of such products.*