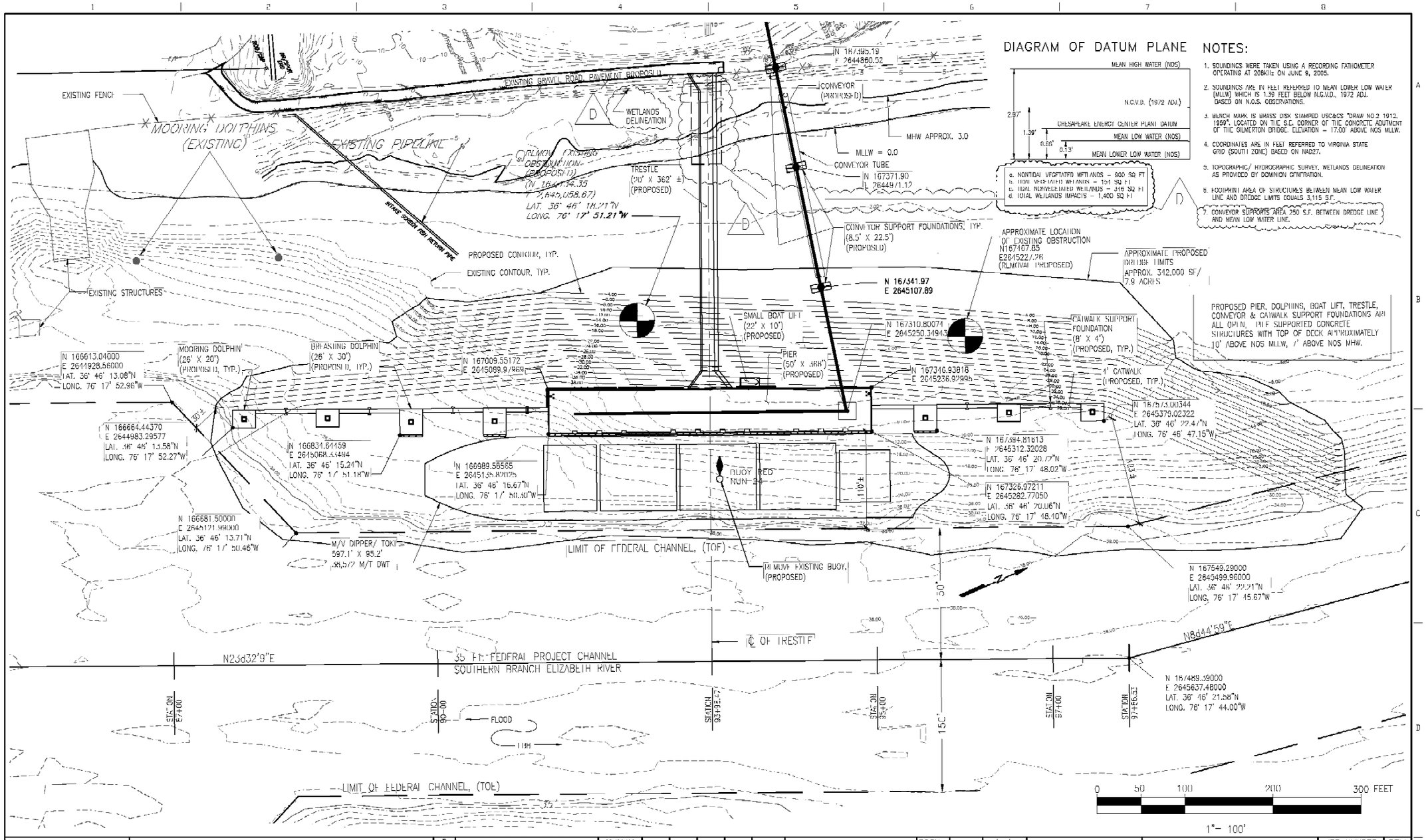

REV	REVISIONS	DATE	DRN	DSGN	CKD	APPD	REFERENCE DRAWINGS
D	REVISED PER AGENCY REVIEW	03/06/06					
C	REVISED FOUNDATION LOCATIONS	02/22/06					
B	ADD 2nd DISTRIBUTION	01/31/06					
A	ISSUED FOR ENVIRONMENTAL PERMIT REVIEW	01/16/06					
	ISSUED FOR ENVIRONMENTAL PERMIT REVIEW	01/06/06					

DSGN	JMH	01/16/06
DRN	JDH	01/05/06
CKD		
SCALE: 1:100		

MARINE CONTRACTING CORPORATION
LIBERTY ENGINEERING, P.C.
STRUCTURAL ENGINEERING

DOMINION GENERATION
CHESAPEAKE ENERGY CENTER
CHESAPEAKE, VIRGINIA

LOCATION PLAN & DREDGE LIMITS

JOB NUMBER

REV D

DRAWING NUMBER
LPD1

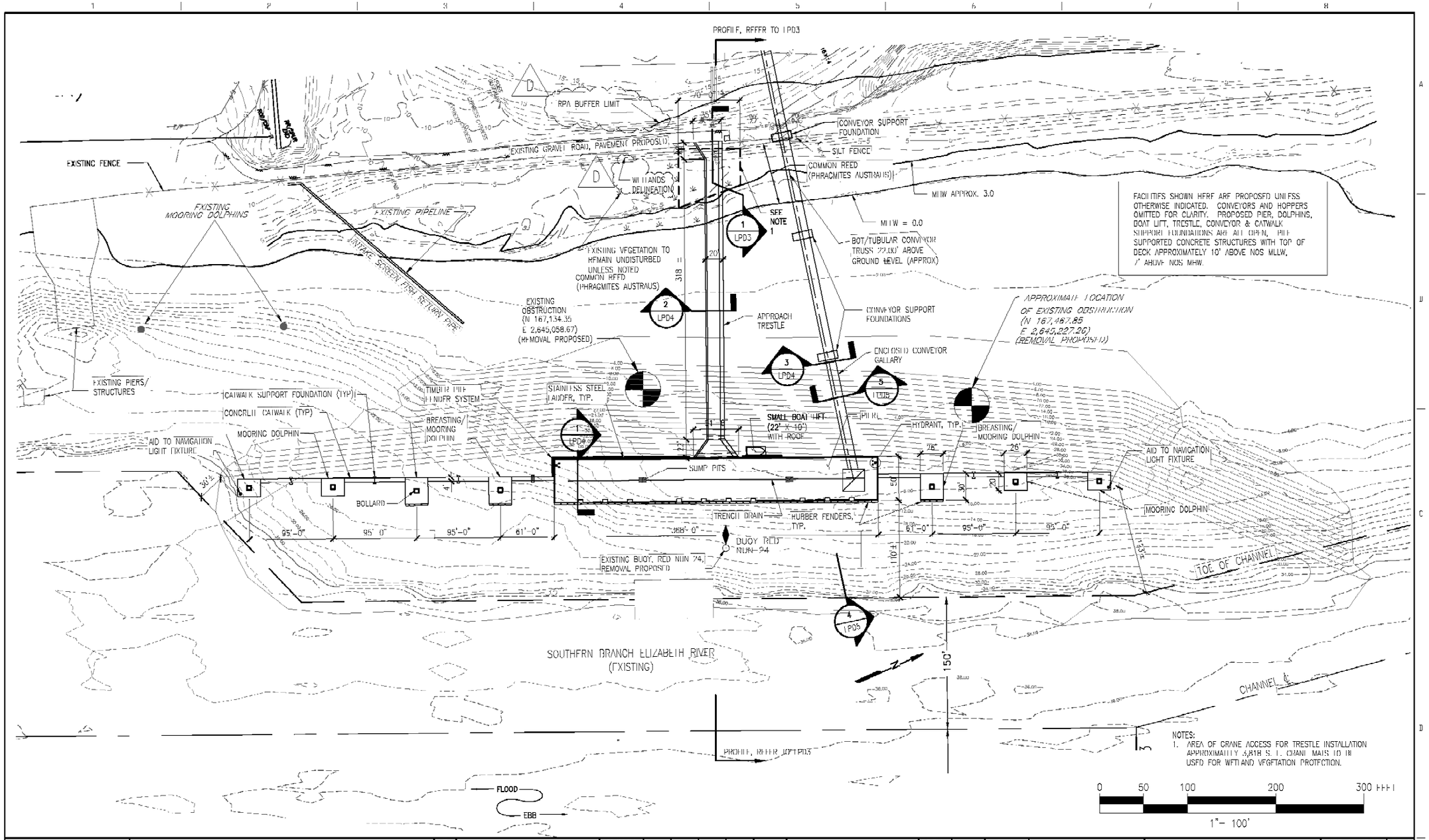

FACILITIES SHOWN HERE ARE PROPOSED UNLESS OTHERWISE INDICATED. CONVEYORS AND HOPPERS OMITTED FOR CLARITY. PROPOSED PIER, DOLPHINS, BOAT LIFT, TRESTLE, CONVEYOR & CATWALK SUPPORT FOUNDATIONS ARE ALL OPEN, PILE SUPPORTED CONCRETE STRUCTURES WITH TOP OF DECK APPROXIMATELY 10' ABOVE NOS MLLW, 7' ABOVE NOS MHW.

NOTES:
1. AREA OF CRANE ACCESS FOR TRESTLE INSTALLATION APPROXIMATELY 5,818 S. F. CRANE MATS TO BE USED FOR WETLAND VEGETATION PROTECTION.

REV	REVISIONS	DATE	DRN	DSGN	CKD	APPD	REFERENCE DRAWINGS
D	REVISED PER AGENCY COMMENTS	03/06/06					
C	REVISED FOUNDATION LOCATIONS	02/22/06					
B	ADD 2 nd OBSTRUCTION	01/23/06					
A	ISSUED FOR ENVIRONMENTAL PERMIT REVIEW	01/16/06					
	ISSUED FOR ENVIRONMENTAL PERMIT REVIEW	01/06/06					

DSGN	JMH	01/16/06
DRN	JDH	01/05/06
CKD		
SCALE: 1:100		

MARINE CONTRACTING CORPORATION
LIBERTY ENGINEERING, P.C.
STRUCTURAL ENGINEERING

DOMINION GENERATION
CHESAPEAKE ENERGY CENTER
CHESAPEAKE, VIRGINIA
SITE PLAN

JOB NUMBER
REV A
DRAWING NUMBER
LPD2

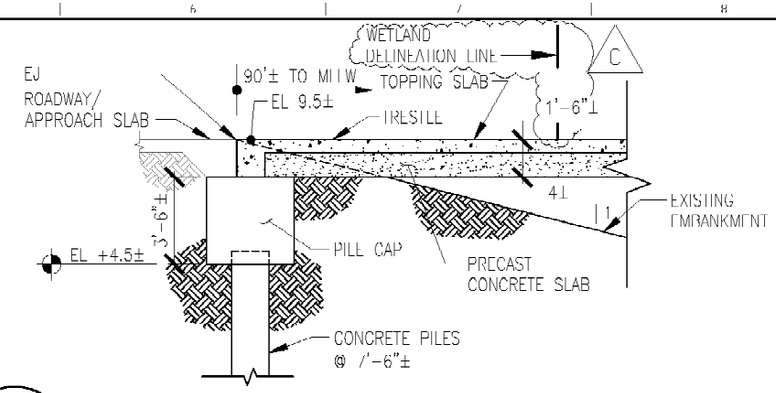

1 / LPD3 SECTION – END OF TRESTLE

SCALE: 3/16" – 1' 0"

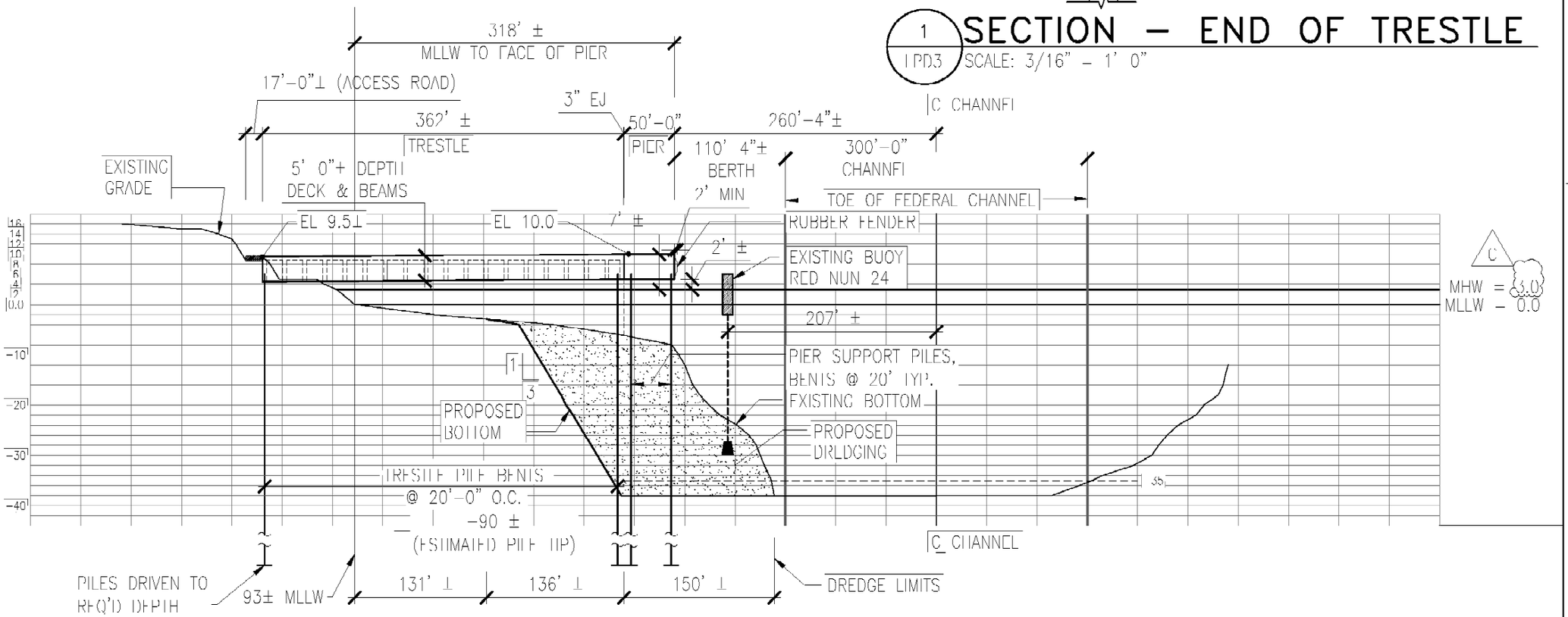

PROFILE AT TRESTLE CENTER LINE

REV	REVISIONS	DATE	DRN	DSGN	CKD	APPD	REFERENCE DRAWINGS
C	RELOCATED WETLAND DELINEATION LINE	03/07/06					
B	REVISED PER AGENCY COMENTS	03/06/06					
A	ISSUED FOR ENVIRONMENTAL PERMIT REVIEW	01/16/06					
	ISSUED FOR ENVIRONMENTAL PERMIT REVIEW	01/06/06					

DSGN	JMH	01/16/06
DRN	JDH	01/05/06
CKD		

SCALE: 1" = 100' H
1" = 5' V

MARINE CONTRACTING CORPORATION
LIBERTY ENGINEERING, P.C.
STRUCTURAL ENGINEERING

DOMINION GENERATION
CHESAPEAKE ENERGY CENTER
CHESAPEAKE, VIRGINIA
PROFILE, STATION 93+98.47

JOB NUMBER
REV C
DRAWING NUMBER
LPD3

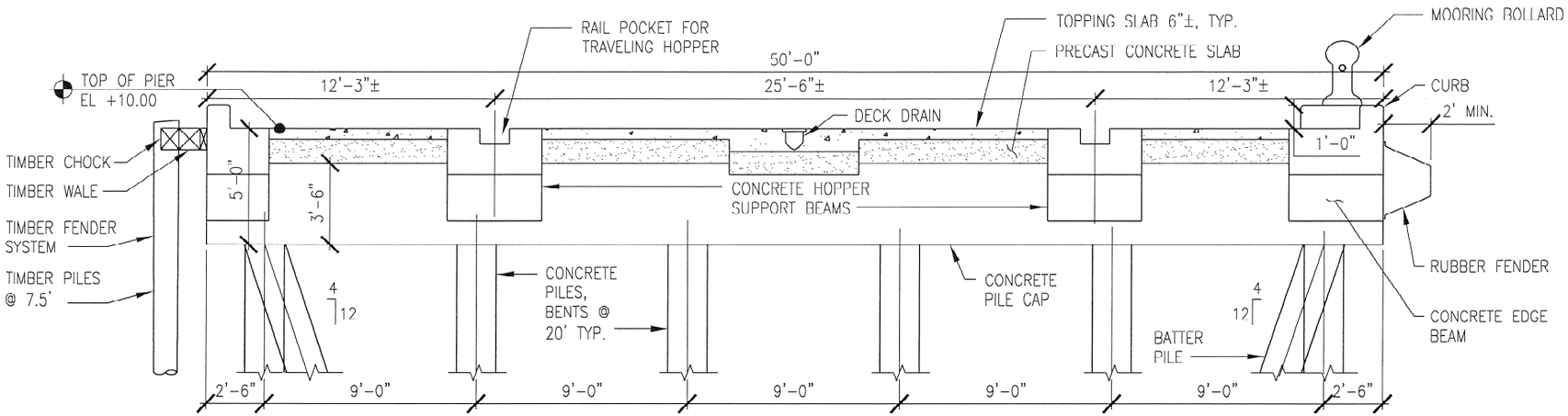

1 SECTION – PIER
LPD4 SCALE: 3/16" = 1'-0"

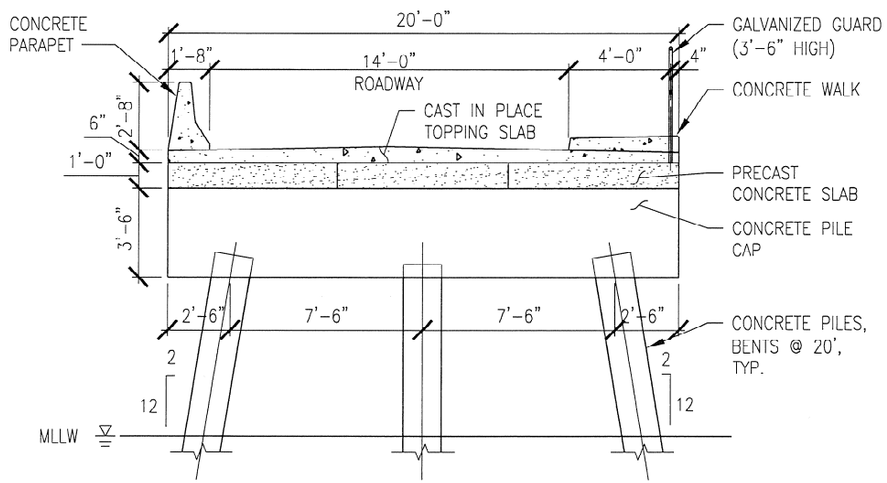

2 SECTION – TRESTLE
LPD4 SCALE: 3/16" = 1'-0"

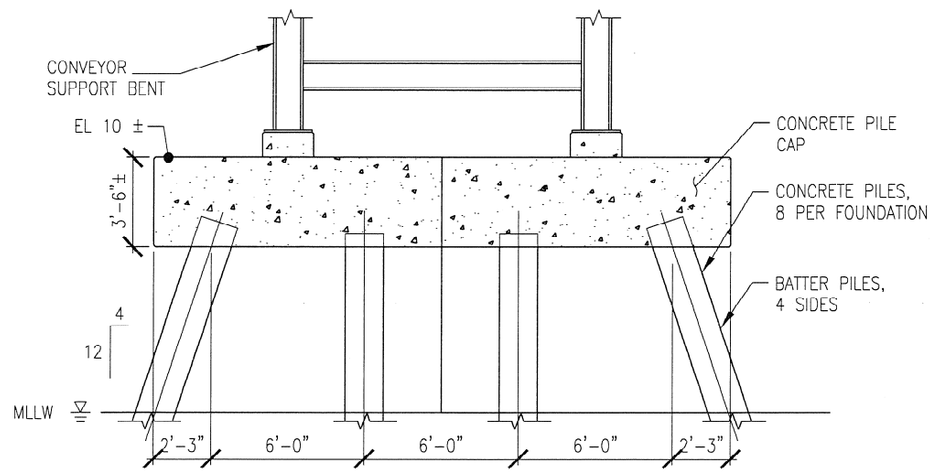

3 CONVEYOR SUPPORT
LPD4 SCALE: 3/16" = 1'-0"

REV	REVISIONS	DATE	DRN	DSGN	CKD	APPD	REFERENCE DRAWINGS
A	ISSUED FOR ENVIRONMENTAL PERMIT REVIEW	01/16/06					
	ISSUED FOR ENVIRONMENTAL PERMIT REVIEW	01/06/06					

DSGN	JMH	01/16/06
DRN	JDH	01/05/06
CKD		
SCALE: 3/16" = 1'-0"		

MARINE CONTRACTING CORPORATION
LIBERTY ENGINEERING, P.C.
STRUCTURAL ENGINEERING

DOMINION GENERATION
CHESAPEAKE ENERGY CENTER
CHESAPEAKE, VIRGINIA
SECTIONS

JOB NUMBER
REV A
DRAWING NUMBER LPD4

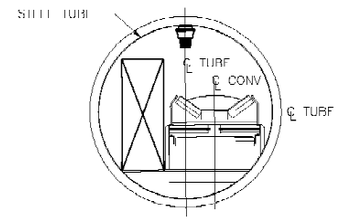

5 LPD2 **SECTION – CONV**
SCALE: N.T.S.

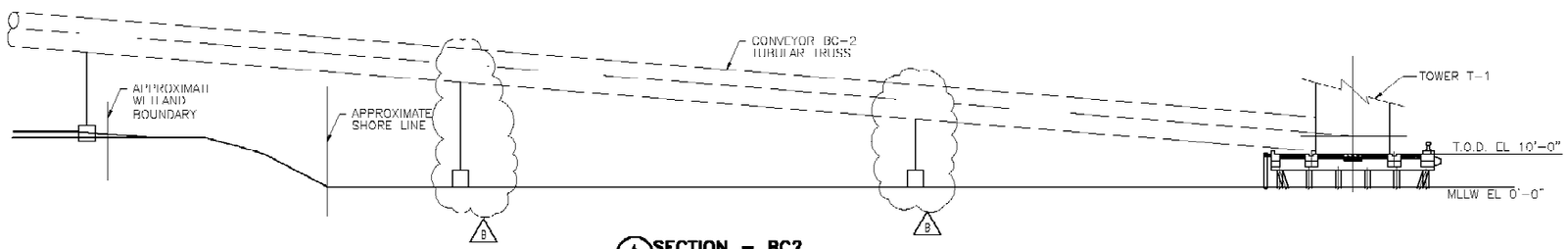

4 LPD2 **SECTION – BC2**
SCALE: 1" = 20' 0"

0 10 20 40 60 FEET
1"= 20'

POWER ENGINEERS

REV	REVISIONS	DATE	DRN	DSGN	CKD	APPD	REFERENCE DRAWINGS
B	REVISED FOUNDATION LOCATIONS	02/22/06					
A	ISSUED FOR ENVIRONMENTAL PERMIT REVIEW	01/16/06					

DSGN	RS	01/16/06
DRN	JAS	
CKD		
SCALE:	AS NOTED	

MARINE CONTRACTING CORPORATION
LIBERTY ENGINEERING, P.C.
STRUCTURAL ENGINEERING

DOMINION GENERATION
CHESAPEAKE ENERGY CENTER
CHESAPEAKE, VIRGINIA

SECTIONS

JOB NUMBER

REV A

DRAWING NUMBER
LPD5

LPD3

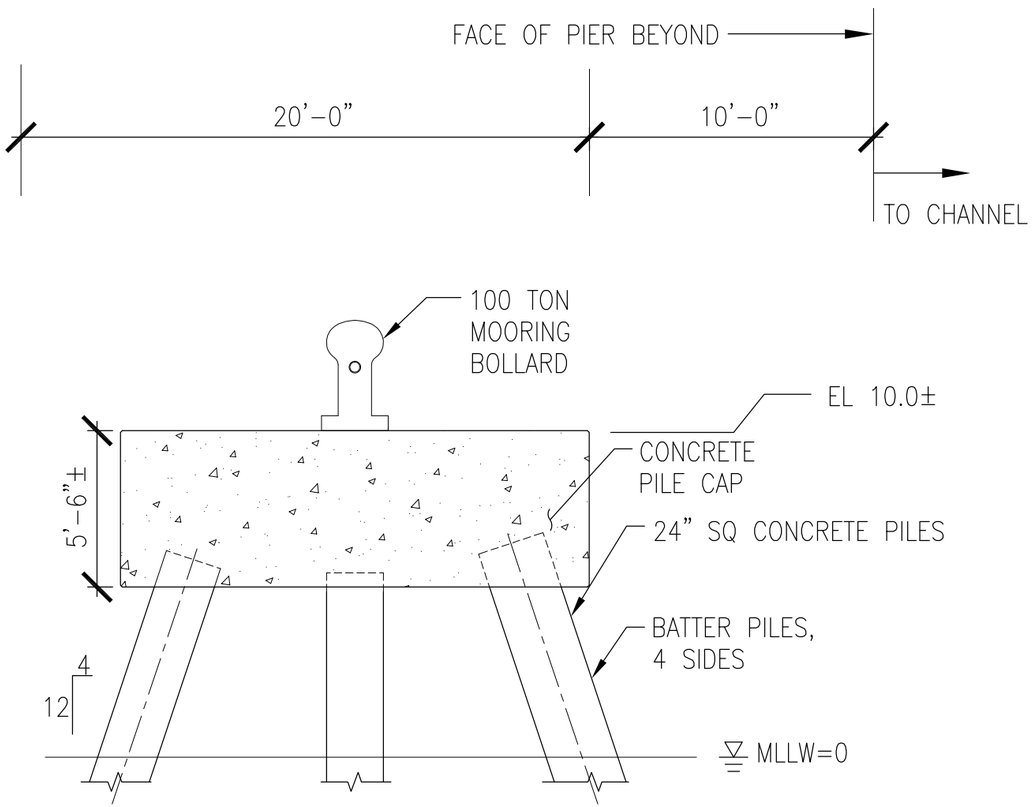

1
LPD6

SECTION

SCALE: 3/16" = 1'-0"

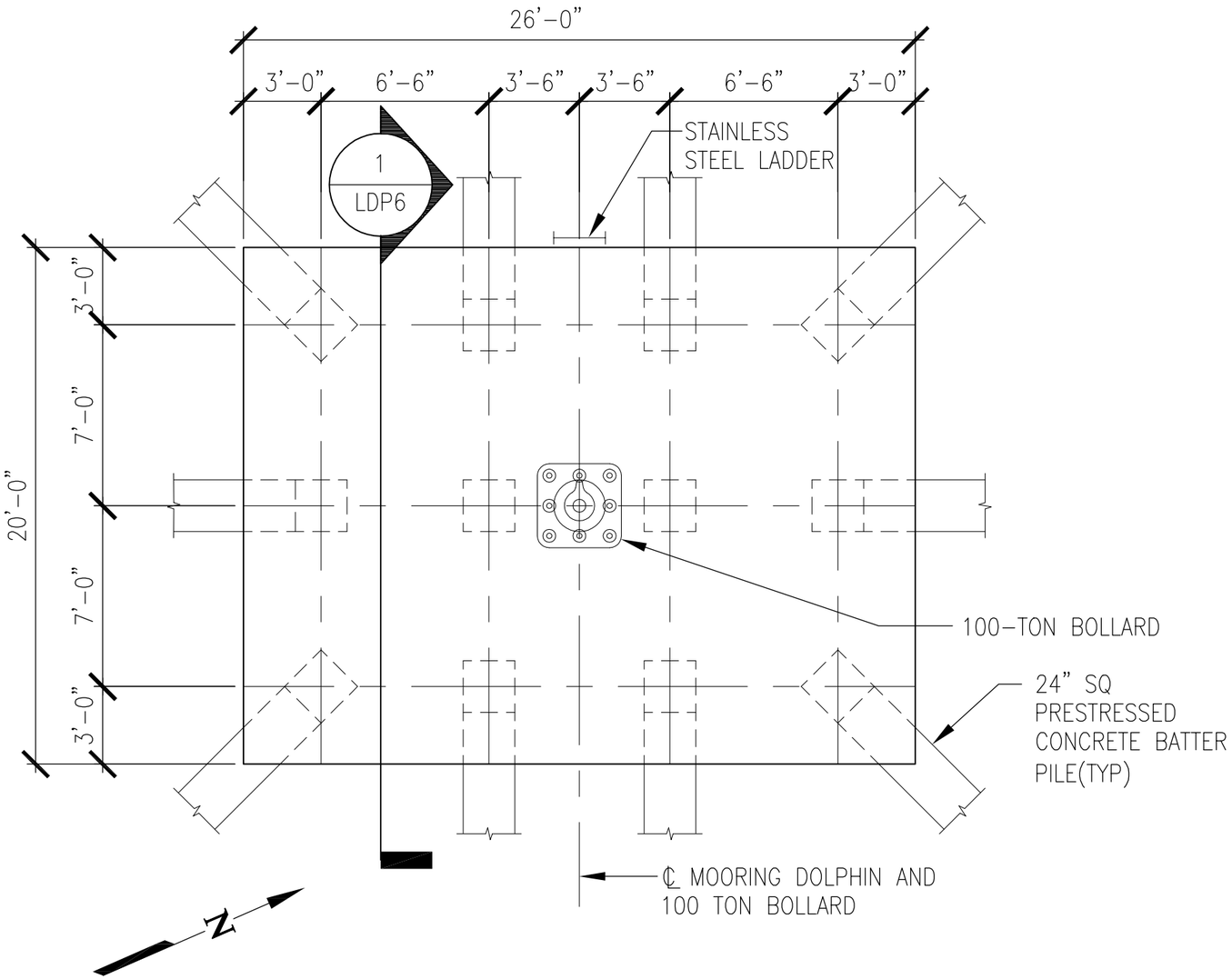

TYPICAL MOORING DOLPHIN PLAN

SCALE: 3/16" = 1'-0"

REV	REVISIONS	DATE	DRN	DSGN	CKD	APPD	REFERENCE DRAWINGS

DSGN	JMH	
DRN	JDH	03/09/06
CKD		
SCALE: 3/16" = 1'-0"		

MARINE CONTRACTING CORPORATION
1874 AIR RAIL AVE
VIRGINIA BEACH, VIRGINIA 23471-2828

LIBERTY ENGINEERING, P. C.
4521 E Honeygrove Rd #108
Virginia Beach, VA 23455
Phone: (757) 499-2791
Fax: (757) 499-7984
STRUCTURAL ENGINEERING

DOMINION GENERATION
CHESAPEAKE ENERGY CENTER
CHESAPEAKE, VIRGINIA
MOORING DOLPHIN

JOB NUMBER
REV
DRAWING NUMBER
LPD6

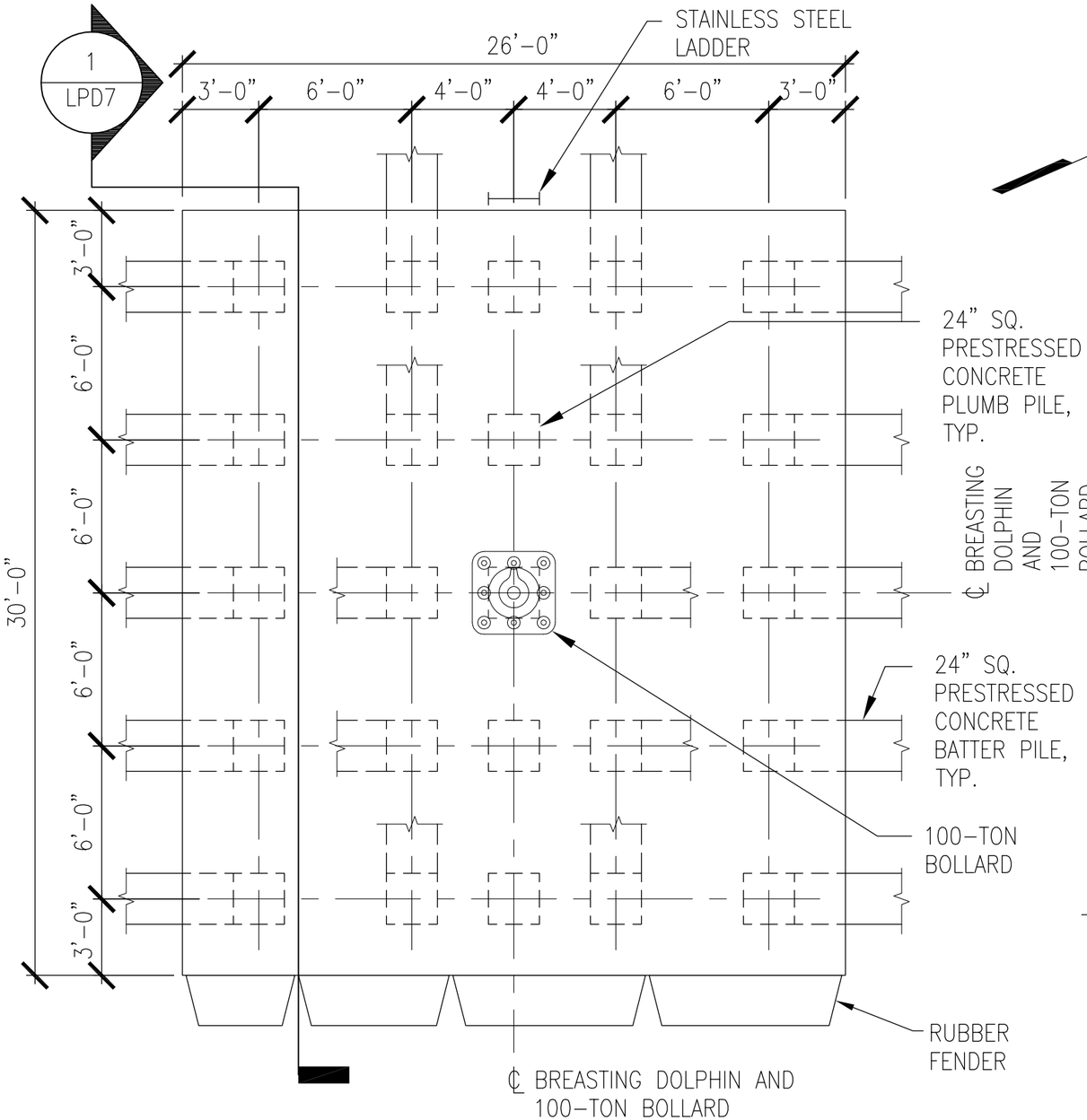

1 LPD7 TYPICAL BREASTING DOLPHIN PLAN

SCALE: 3/16" = 1'-0"

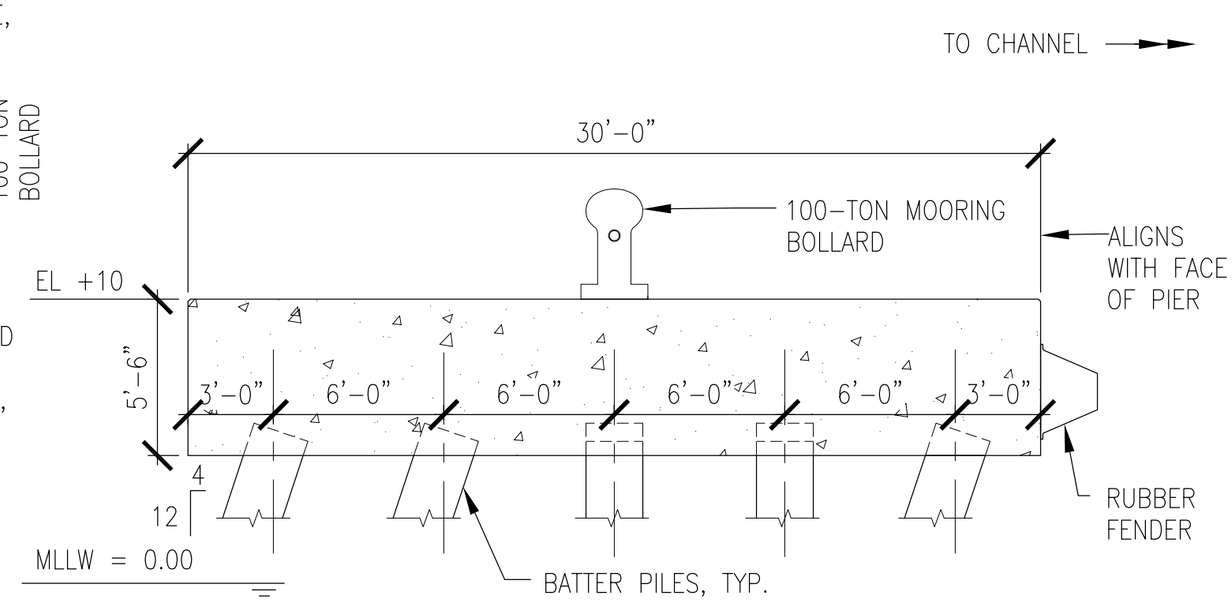

1 LPD7 SECTION

SCALE: 3/16" = 1'-0"

REV	REVISIONS	DATE	DRN	DSGN	CKD	APPD	REFERENCE DRAWINGS

DSGN	JMH	
DRN	JDH	03/09/06
CKD		
SCALE: 3/16" = 1'-0"		

MARINE CONTRACTING CORPORATION
1017A AIR RAIL AVE
VIRGINIA BEACH, VIRGINIA 23471-5525

LIBERTY ENGINEERING, P. C.
4521 E Honeygrove Rd #108
Virginia Beach, VA 23455
Phone: (757) 499-2791
Fax: (757) 499-7984
STRUCTURAL ENGINEERING

DOMINION GENERATION

CHESAPEAKE ENERGY CENTER
CHESAPEAKE, VIRGINIA

BREASTING DOLPHIN

JOB NUMBER

REV

DRAWING NUMBER
LPD7