SIGN ERECTION DETAILS

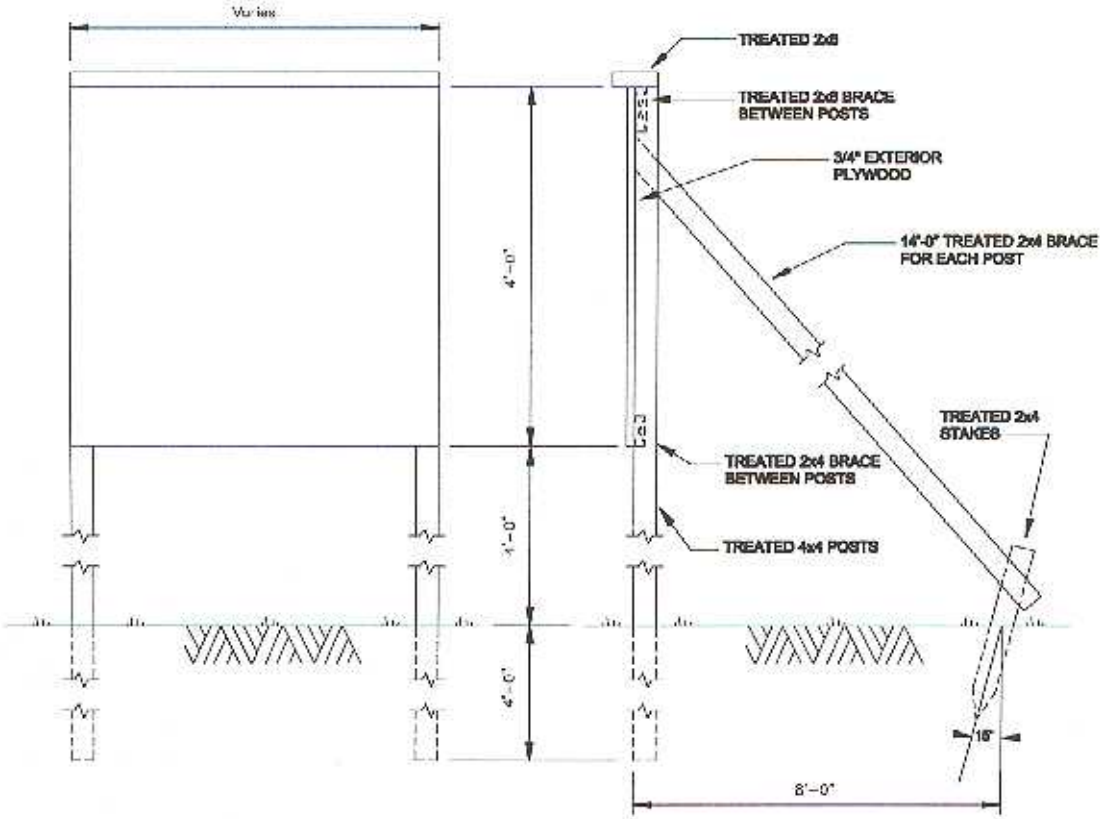

Attachment 1B

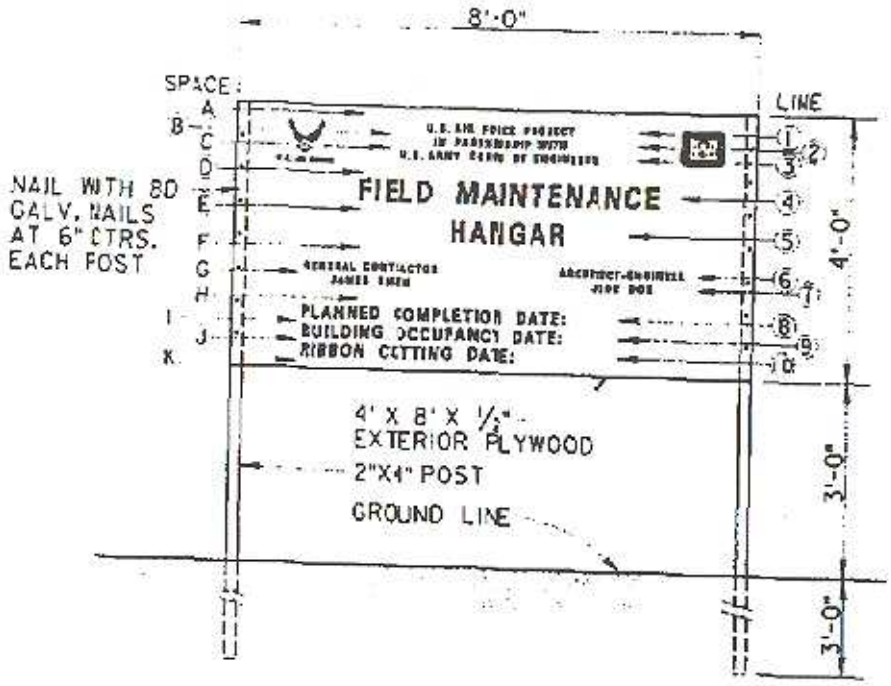

FRONT VIEW

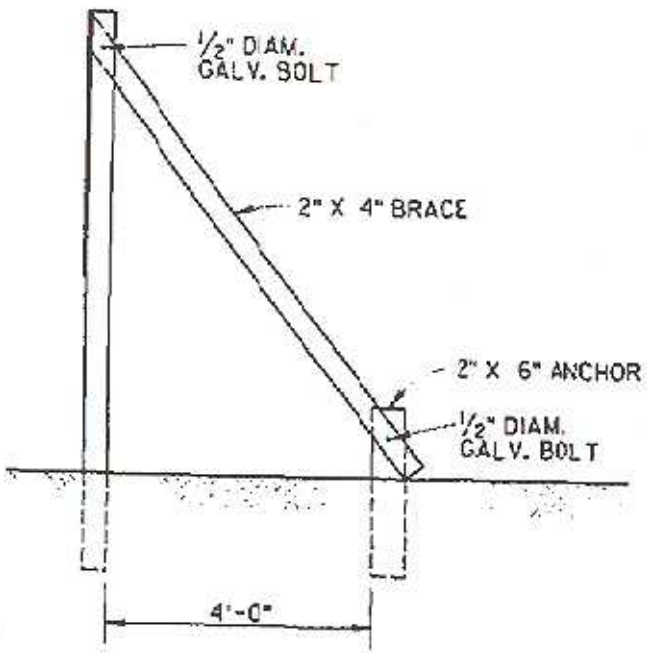

END VIEW

U.S. AIR FORCE ACC MCP PROJECT SIGN DETAILS

NOTES:

1. POSTS SHALL BE S4S.
2. PLYWOOD SHALL BE EXTERIOR TYPE, A-C GRADE.
3. BEFORE PAINTING, SURFACE SHALL BE CLEAN, DRY, FREE OF GREASE AND SANDED.
4. PAINT WITH ONE EXTERIOR OIL PRIME COAT AND EXTERIOR TYPE ALKYD, CONFORMING TO MASTER PAINTERS INSTITUTE MPI-9, MPI GLOSS LEVEL 6. COLOR SHALL MATCH SHERWIN WILLIAMS SW 2175.
5. ALL LETTERING SHALL BE EXTERIOR TYPE ALKYD. COLOR SHALL MATCH SHERVIN WILLIAMS SW 1900.
6. DECALOMANIA FOR CORPS OF ENGINEERS INSIGNIA AND U.S. AIR FORCE EMBLEM WILL BE FURNISHED BY THE CONTRACTING OFFICER FOR INSTALLATION BY THE CONTRACTOR.
7. ALL EXPOSED WOOD (POSTS, SUPPORTS, BACK, ETC.) SHALL BE PAINTED THE SAME BACKGROUND COLOR AS THE SIGN.
8. LETTERING STYLE SHALL BE EITHER HELIOS EXTRA BOLD CONDENSED, HELIOS BOLD II, HELVETICA BLACK ROMAN, OR HELVETICA BOLD ROMAN.

SCHEDULE

SPACE	HEIGHT	LINE	DESCRIPTION	LETTER HEIGHT	STROKE
A	3"	1	U.S. AIR FORCE PROJECT	1.5"	3/16"
B	1"	2	IN PARTNERSHIP WITH	1.5"	3/16"
C	1"	3	U.S. ARMY CORPS OF ENGINEERS	1.5"	3/16"
D	4"	4	PROJECT NAME	4"	1/2"
E	3"	5	PROJECT NAME CONT'D (IF REQ'D)	4"	1/2"
F	4"	6	GENERAL CONTRACTOR/A-E	1.5"	3/16"
G	1"	7	GENERAL CONTRACTOR/A-E	1.5"	3/16"
H	4"	8	PLANNED COMPLETION DATE	2.5"	1/4"
I	1"	9	BUILDING OCCUPANCY DATE	2.5"	1/4"
J	1"	10	RIBBON CUTTING DATE	2.5"	1/4"
K	2"				

Atch 2