AMENDMENT OF SOLICITATION/MODIFICATION OF CONTRACT

1. CONTRACT ID CODE	PAGE OF PAGES	
J	1	2

2. AMENDMENT/MODIFICATION NO.	3. EFFECTIVE DATE	4. REQUISITION/PURCHASE REQ. NO.	5. PROJECT NO.(If applicable)
0002	15-Oct-2002	W26GLG-2253-0525	MUHJ 033006

6. ISSUED BY CODE DACA65

CONTRACTING OFFICE (CA/CW)
US ARMY ENGR DIST NORFOLK
ATTN: CENAO-SS-C
803 FRONT STREET
NORFOLK VA 23510-1096

7. ADMINISTERED BY (If other than item 6) CODE

See Item 6

8. NAME AND ADDRESS OF CONTRACTOR (No., Street, County, State and Zip Code)

CODE FACILITY CODE

X	9A. AMENDMENT OF SOLICITATION NO. DACA65-02-R-0041
X	9B. DATED (SEE ITEM 11) 24-Sep-2002
	10A. MOD. OF CONTRACT/ORDER NO.
	10B. DATED (SEE ITEM 13)

11. THIS ITEM ONLY APPLIES TO AMENDMENTS OF SOLICITATIONS

[X] The above numbered solicitation is amended as set forth in Item 14. The hour and date specified for receipt of Offer [ ] is extended, [X] is not extended.

Offer must acknowledge receipt of this amendment prior to the hour and date specified in the solicitation or as amended by one of the following methods: (a) By completing Items 8 and 15, and returning _____ copies of the amendment; (b) By acknowledging receipt of this amendment on each copy of the offer submitted; or (c) By separate letter or telegram which includes a reference to the solicitation and amendment numbers. FAILURE OF YOUR ACKNOWLEDGMENT TO BE RECEIVED AT THE PLACE DESIGNATED FOR THE RECEIPT OF OFFERS PRIOR TO THE HOUR AND DATE SPECIFIED MAY RESULT IN REJECTION OF YOUR OFFER. If by virtue of this amendment you desire to change an offer already submitted, such change may be made by telegram or letter, provided each telegram or letter makes reference to the solicitation and this amendment, and is received prior to the opening hour and date specified.

12. ACCOUNTING AND APPROPRIATION DATA (If required)

13. THIS ITEM APPLIES ONLY TO MODIFICATIONS OF CONTRACTS/ORDERS. IT MODIFIES THE CONTRACT/ORDER NO. AS DESCRIBED IN ITEM 14.

[ ] A. THIS CHANGE ORDER IS ISSUED PURSUANT TO: (Specify authority) THE CHANGES SET FORTH IN ITEM 14 ARE MADE IN THE CONTRACT ORDER NO. IN ITEM 10A.

[ ] B. THE ABOVE NUMBERED CONTRACT/ORDER IS MODIFIED TO REFLECT THE ADMINISTRATIVE CHANGES (such as changes in paying office, appropriation date, etc.) SET FORTH IN ITEM 14, PURSUANT TO THE AUTHORITY OF FAR 43.103(B).

[ ] C. THIS SUPPLEMENTAL AGREEMENT IS ENTERED INTO PURSUANT TO AUTHORITY OF:

[ ] D. OTHER (Specify type of modification and authority)

E. IMPORTANT: Contractor [ ] is not, [ ] is required to sign this document and return _____ copies to the issuing office.

14. DESCRIPTION OF AMENDMENT/MODIFICATION (Organized by UCF section headings, including solicitation/contract subject matter where feasible.)

AMENDMENT NO. 0002 to DACA65-02-R-0041, Storm Drainage, Langley Air Force Base, VA.

Except as provided herein, all terms and conditions of the document referenced in Item 9A or 10A, as heretofore changed, remains unchanged and in full force and effect.

15A. NAME AND TITLE OF SIGNER (Type or print)		16A. NAME AND TITLE OF CONTRACTING OFFICER (Type or print) TEL: EMAIL:	
15B. CONTRACTOR/OFFEROR (Signature of person authorized to sign)	15C. DATE SIGNED	16B. UNITED STATES OF AMERICA BY (Signature of Contracting Officer)	16C. DATE SIGNED 15-Oct-2002

SECTION SF 30 BLOCK 14 CONTINUATION PAGE

The following items are applicable to this modification:

CONTINUATION

Attached is a SAMPLE of drawings and specifications of subject project to aid in determining the subcontractor's level of engagement for this project. THIS IS NOT INTENDED TO BE A COMPLETE SET OF CONSTRUCTION DRAWINGS AND SPECIFICATIONS, AND SHOULD BE USED ONLY AS AN AID FOR THE CONTRACTOR IN PREPARING THE PHASE ONE PORTION OF THE PROPOSAL.

PROJECT TABLE OF CONTENTS

DIVISION 01 - GENERAL REQUIREMENTS

01005 PROJECT WORK REQUIREMENTS AND RESTRICTIONS
01090 SOURCES FOR REFERENCE PUBLICATIONS
01111 SAFETY AND HEALTH REQUIREMENTS
01200 PROJECT MEETINGS
01310 PROJECT SCHEDULE
01312 RESIDENT MANAGEMENT SYSTEM (RMS)
01330 SUBMITTAL PROCEDURES
01356A STORM WATER POLLUTION PREVENTION MEASURES
01451A CONTRACTOR QUALITY CONTROL
01500 TEMPORARY CONSTRUCTION FACILITIES
01560 ENVIRONMENTAL PROTECTION (PROJECT SITE)
01572A CONSTRUCTION AND DEMOLITION WASTE MANAGEMENT
01711 AS-BUILT RECORD DRAWINGS AND SHOP DRAWINGS
01780A CLOSEOUT SUBMITTALS
01850 CONTRACT DRAWINGS

DIVISION 02 - SITE WORK

02072 EXCAVATION OF PETROLEUM CONTAMINATED SOIL
02210 GRADING
02220a DEMOLITION
02221 EXCAVATION, FILLING AND BACKFILLING FOR BUILDINGS
02222 EXCAVATION, TRENCHING, AND BACKFILLING FOR UTILITIES SYSTEMS
02225 EARTHWORK FOR ROADWAYS
02241 AGGREGATE BASE COURSE
02380a STONE, CHANNEL, SHORELINE/COASTAL PROTECTION FOR STRUCTURES
02467N HELICAL PIER TYPE PILES
02510a WATER DISTRIBUTION SYSTEM
02512 ASPHALT CONCRETE PAVEMENT (VDOT)
02531a SANITARY SEWERS
02571 PAVEMENT REMOVAL AND REPLACEMENT
02582N ELECTRICAL MANHOLE AND HANDHOLE
02630a STORM-DRAINAGE SYSTEM
02713a BITUMINOUS BASE COURSE
02741a HOT-MIX ASPHALT (HMA) FOR ROADS
02748A BITUMINOUS TACK AND PRIME COATS
02763a PAVEMENT MARKINGS
02770a CONCRETE SIDEWALKS AND CURBS AND GUTTERS
02921a SEEDING
02935 TURF

DIVISION 03 - CONCRETE

03100a STRUCTURAL CONCRETE FORMWORK
03150a EXPANSION JOINTS, CONTRACTION JOINTS, AND WATERSTOPS
03200a CONCRETE REINFORCEMENT
03300 CAST-IN-PLACE STRUCTURAL CONCRETE

DIVISION 04 - MASONRY

04200 MASONRY

DIVISION 05 - METALS

05500a MISCELLANEOUS METAL

DIVISION 07 - THERMAL & MOISTURE PROTECTION

07412 NON-STRUCTURAL METAL ROOFING
07600 SHEET METALWORK, GENERAL

DIVISION 13 - SPECIAL CONSTRUCTION

13100A LIGHTNING PROTECTION SYSTEM
13120A PRECAST CONCRETE BUILDING

DIVISION 15 - MECHANICAL

15050N BASIC MECHANICAL MATERIALS AND METHODS
15131A VERTICAL PUMPS, AXIAL-FLOW AND MIXED-FLOW IMPELLER-TYPE
15192N FUEL OIL PIPING
15400A PLUMBING, GENERAL PURPOSE
15700A UNITARY HEATING AND COOLING EQUIPMENT
15768N ELECTRIC SPACE HEATING EQUIPMENT
15810N DUCTWORK AND DUCTWORK ACCESSORIES
15895A AIR SUPPLY, DISTRIBUTION, VENTILATION, AND EXHAUST SYSTEM

DIVISION 16 - ELECTRICAL

16050N BASIC ELECTRICAL MATERIALS AND METHODS
16081N APPARATUS INSPECTION AND TESTING
16120A INSULATED WIRE AND CABLE
16261N VARIABLE FREQUENCY DRIVE SYSTEMS UNDER 600 VOLTS
16264A DIESEL-GENERATOR SET, STATIONARY, STANDBY APPLICATIONS
16272N THREE-PHASE PAD-MOUNTED TRANSFORMERS
16302N UNDERGROUND TRANSMISSION AND DISTRIBUTION
16341N SF6 INSULATED PAD-MOUNTED SWITCHGEAR
16403A MOTOR CONTROL CENTERS AND POWER CENTERS
16410A AUTOMATIC TRANSFER SWITCH AND BY-PASS/ISOLATION SWITCH
16415A ELECTRICAL WORK, INTERIOR
16510N INTERIOR LIGHTING

-- End of Project Table of Contents --

SECTION 01005

PROJECT WORK REQUIREMENTS AND RESTRICTIONS
07/00

PART 1 GENERAL

1.1 DEFINITIONS

a. Facility: The facility is the Langley Air Force Base located in Hampton, Virginia.

b. CO: Contracting Officer or his authorized representative.

1.2 COOPERATION WITH USING AGENCY AND OTHER CONTRACTORS

During the period of this contract, other contracts may be in force for the construction of other features of work on or adjacent to the site of work being accomplished under this contract. It shall be the responsibility of the Contractor on this contract to be fully informed of the extent of the limits of work to be performed by other Contractors. Should there be any conflict between these limits, it shall be brought to the attention of the Contracting Officer and the CO's decision shall be final. Also, prior to completion of work under this contract, members of the Using Agency may be performing work or occupying facilities on or adjacent to the area. The Contractor shall arrange his plant and shall schedule and perform this work so as to effectively cooperate with all other Contractors and Government agencies.

1.3 PERSONNEL RESTRICTIONS

Personnel are limited to the immediate site areas and shall not enter buildings or facilities not involved in the work. All employees of the Contractor will be subject to all rules and regulations of the Facility which pertain to personnel. The Contractor shall erect fences and signs as specified and be responsible for the restrictions of all personnel. The Contractor's plans for restricting personnel access to the project site shall be submitted for approval as a part of the Safety Plan (Accident Prevention Plan).

1.4 TRANSPORTATION FACILITIES

The Facility is served by an all weather surfaced road network. Road(s) within the Facility proposed to be used by the Contractor shall be subject to prior approval of the Facility authorities and such roads, if used, shall be maintained throughout construction and shall be restored to as good condition as existed prior to their use. The Contractor shall also construct, subject to approval, such temporary haul roads and bridges as may be necessary for conducting his work. Any such temporary construction shall be removed and the affected area restored to its original condition. All costs for the use of existing transportation facilities, for the construction of temporary facilities, and for maintenance, repair, removal and restoration shall be borne by the Contractor.

1.4.1 Use of Roads

The Contractor shall keep all roads clear of all obstructions and free of mud and other foreign materials resulting from operations. The Contractor's vehicles shall at no time follow a vehicle closer than 50

feet, and all vehicles shall pull off the road and come to a complete stop when meeting emergency vehicles and vehicles with flashing lights. Facility speed limits and traffic controls will be observed.

1.4.2 Road Restrictions

The movement of all vehicles within the Facility shall be confined to the roads designated and shall comply with traffic regulations within the Facility. Other roads may be used only with the approval of the CO.

1.4.2.1 Cleated Vehicles

Cleated vehicles shall not be moved over surfaced roads except at the immediate site of the area where they are to be used.

1.5 COORDINATION IN WORK AREAS

1.5.1 Occupied Work Area

The area where work is to be accomplished will be occupied during the work. Activities of the occupants of the scheduled work area shall not be interrupted or hampered in any way without prior written approval of the Contracting Officer.

1.5.2 Maintenance of Utilities

Any active utilities, including but not limited to electricity, gas, water, sewer, heating, air conditioning, or any like service, that will require interruption or replacement in any occupied area affected as a result of the Contractors scheduled work activities, shall be temporarily provided by the Contractor at his own expense until the affected service is fully and permanently restored. All temporary method(s) of service replacement the Contractor proposes for use on this contract shall be approved by the Contracting Officer prior to commencing the work.

1.5.3 Hours of Work

The normal work hours for construction shall be from 8:00 a.m. to 4:30 p.m., Monday through Friday of each week. Any request to change these hours shall be made in writing to the Contracting Officer at least two calendar days prior to the desired day on which the change is to go into effect. The changed hours shall not go into effect until written permission has been received from the Contracting Officer.

1.5.4 Digging Permits

Contractor is responsible for obtaining all digging permits, including associated locating and marking services, in accordance with installation and local requirements, at no additional cost to the Government.

1.6 INTERRUPTIONS OF UTILITIES

1.6.1 Approval

Utility services shall not be interrupted by the Contractor to relocate, make connections, or interrupt for any purpose, without written approval of the Contracting Officer.

1.6.2 Request

Request for permission to shut down services shall be submitted in writing to the Contracting Officer not less than 10 calendar days prior to date of proposed interruption. The request shall give the following information:

a. Nature of Utility (Gas, L.P. or H.P., Water, Elec.)

b. Size of line and location of shutoff.

c. Buildings and services affected.

d. Hours and date of shutoff.

e. Estimated length of time service will be interrupted.

1.6.3 Service Interruptions

Services shall not be shut off until receipt of approval of the proposed hours and date from the Contracting Officer.

1.6.4 Timely Disconnections

Shutoffs which will cause interruption of Government work operations as determined by the Contracting Officer shall be accomplished during regular non-work hours or non-work days of the Using Agency without any additional cost to the Government.

1.6.5 Utilities Operation

Operation of valves on water mains will be by Government personnel. Where shutoff of water lines interrupts service to fire hydrants or fire sprinkler systems, the Post Fire Department shall be notified by the Contractor in writing 72 hours prior to the proposed interruption. The Contractor shall arrange his operations and have sufficient material and personnel available to complete the work without undue delay and shall restore service without delay in event of emergency.

1.6.6 Gas

Flow in gas mains which have been shut off shall not be restored until the Government inspector has determined that all items serviced by the gas line have been shut off.

1.7 PHYSICAL DATA

The physical conditions indicated on the drawings and in the specifications are the result of site visits, surveys and borings. See Section 01055 SOIL BORING DATA for boring logs and data.

1.8 TIME EXTENSIONS FOR UNUSUALLY SEVERE WEATHER

This provision specifies the procedure for the determination of time extensions for unusually severe weather in accordance with the Contract Clause entitled "Default: (Fixed Price Construction)". In order for the Contracting Officer to award a time extension under this clause, the following conditions must be satisfied:

a. The weather experienced at the project site during the contract period must be found to be unusually severe, that is,

more severe than the adverse weather anticipated for the project location during any given month.

b. The unusually severe weather must actually cause a delay to the completion of the project. The delay must be beyond the control and without the fault or negligence of the contractor.

1.8.1 Schedule

The following schedule of monthly anticipated adverse weather delays is based on National Oceanic and Atmospheric Administration (NOAA) or similar data for the project location and will constitute the base line for monthly weather time evaluations. The contractor's progress schedule must reflect these anticipated adverse weather delays in all weather dependent activities.

MONTHLY ANTICIPATED ADVERSE WEATHER DELAY
WORK DAYS BASED ON (5) DAY WORK WEEK

	JAN	FEB	MAR	APR	MAY	JUN	JUL	AUG	SEP	OCT	NOV	DEC
Langley AFB	9	9	9	6	7	6	7	7	5	6	7	9

1.8.2 Records

Upon acknowledgement of the Notice to Proceed and continuing throughout the contract, the contractor will record on the daily CQC report, the occurrence of adverse weather and resultant impact to normally scheduled work. Actual adverse weather delay days must prevent work on critical activities for 50 percent or more of the contractor's scheduled work day.

1.8.3 Impacted Days

The number of actual adverse weather days shall include days impacted by actual adverse weather (even if adverse weather occurred in previous month), be calculated chronologically from the first to the last day in each month, and be recorded as full days. If the number of actual adverse weather delay days exceeds the number of days anticipated in the schedule of monthly anticipated adverse weather delays, above, the contracting officer will convert any qualifying delays to calendar days, giving full consideration for equivalent fair weather work days, and issue a modification in accordance with the Contract Clauses entitled "Default (Fixed Price Construction)".

1.9 SITE CONTAMINATION

This site is designated a Category III site and is defined as a site which is located in an area known or suspected to be contaminated.

1.9.1 Compliance Requirements

The Contractor shall comply with applicable Federal, state and local laws, codes, ordinances and regulations (including the obtaining of licenses and permits) in connection with any hazardous material, substance or waste.

1.9.2 Requirements

The requirements of this clause and any act or failure to act by the

Government shall not relieve the Contractor of any responsibility or liability for the safety of Government, Contractor or subcontractor personnel or property.

1.9.3 Contamination

In the event that contamination beyond that shown or specified is encountered, the Contracting Officer shall be advised immediately. The contamination shall be removed as directed and replaced with satisfactory material. Payment therefor will be made in conformance with the CHANGES clause of the CONTRACT CLAUSES.

1.10 HISTORICAL AND ARCHAEOLOGICAL FINDS

Federal legislation provides for the protection, preservation, and collection of scientific, prehistorical, historical, and archaeological data, including relics and specimens which might otherwise be lost due to alteration of the terrain or building features as a result of any Federal construction project. Should the Contractor, or any of the Contractor's employees, or parties operating or associated with the Contractor, in the performance of this contract discover evidence of possible scientific, prehistorical, historical, or archaeological data, the Contractor shall immediately cease work at that location and notify the Contracting Officer, giving the location and nature of the findings. The Contractor shall forward written confirmation to the Contracting Officer as directed. The Contractor shall exercise care so as not to disturb or damage artifacts or fossils uncovered during excavation operations, and shall provide such cooperation and assistance as may be necessary to preserve the findings for removal or other disposition. Any person who, without permission, injures, destroys, excavates, appropriates, or removes any historical or prehistorical artifact, object of antiquity, or archaeological resource on the public lands of the United States is subject to arrest and penalty of law. Where appropriate by reason of discovery, the Contracting Officer may order delays in the time of performance or changes in the work, or both. If such delays or changes are ordered, an equitable adjustment will be made in the contract in accordance with the applicable clauses of the contract.

1.11 EQUIPMENT-IN-PLACE LIST:

The Contractor shall maintain a list of equipment installed under the terms of the contract. In the event that the contract includes more than one building or facility, a list must be maintained for each and delivered to the Contracting Officer upon acceptance of each building or facility. Forms to be used for this purpose shall be obtained from the Area Engineer's Office. The list shall include the following:

a. Contract number
b. Description of item
c. Model number
d. Serial number
e. Capacity
f. Name of manufacturer
g. Address of manufacturer
h. Condition of item
i. Replacement cost
j. Name of person who checked item

1.12 EQUIPMENT OWNERSHIP AND OPERATING EXPENSE SCHEDULE

1.12.1 Allowable Costs

Allowable cost for construction and marine plant and equipment in sound workable condition owned or controlled and furnished by a Contractor or subcontractor at any tier shall be based on actual cost data when the Government can determine both ownership and operating costs for each piece of equipment or equipment groups of similar serial and series from the Contractor's accounting records. When both ownership and operating costs cannot be determined from the Contractor's accounting records, equipment costs shall be based upon the applicable provisions of EP 1110-1-8, "Construction Equipment Ownership and Operating Expense Schedule," Region II. Working conditions shall be considered to be average for determining equipment rates using the schedule unless specified otherwise by the Contracting Officer. For equipment not included in the schedule, rates for comparable pieces of equipment may be used or a rate may be developed using the formula provided in the schedule. For forward pricing, the schedule in effect at the time of negotiations shall apply. For retrospective pricing, the schedule in effect at the time the work was performed shall apply.

1.12.2 Rental Costs

Equipment rental costs are allowable, subject to the applicable provisions of the Federal Acquisition Regulations, and shall be substantiated by certified copies of paid invoices. Rates for equipment rented from an organization under common control, lease-purchase or sale-leaseback arrangements will be determined using the schedule except that rental costs leased form an organization under common control that has an established practice of leasing the same or similar equipment to unaffiliated lessees are allowable. Costs for major repairs and overhaul are unallowable.

1.12.3 Equipment Costs

When actual equipment costs are proposed and the total amount of the pricing action is over $25,000, cost or pricing data shall be submitted on the Standard Form 1411, "Contract Pricing Proposal Cover Sheet". By submitting cost or pricing data, the Contractor grants to the Contracting Officer or an authorizing representative the right to examine those books, records, documents and other supporting data that will permit evaluation of the proposed equipment costs. After price agreement the Contractor shall certify that the equipment costs or pricing data submitted are accurate, complete and current.

1.12.4 Marine Equipment

In determining the ownership expense for marine equipment as described in the Schedule, the average use per year shall be 8 months.

1.13 SUBCONTRACTS AND WORK COORDINATION

Contract Clauses "SUBCONTRACTS", "PERMITS AND RESPONSIBILITIES", and "MATERIAL AND WORKMANSHIP" are supplemented as follows:

a. Divisions or sections of specifications are not intended to control the Contractor in dividing the work among subcontractors, or to limit work performed by any trade.

b. Contractor shall be responsible for coordination of the work of the trades, subcontractors, and materials.

c. The Government or its representative will not undertake to settle any difference between the Contractor and Contractor's subcontractors, or between subcontractors.

d. The Government reserves the right to refuse to permit employment on the work or require dismissal from the work of any subcontractor who, by reason of previous unsatisfactory work on Corps of Engineers projects, or for any other reason is considered by the Contracting Officer to be incompetent or otherwise objectionable.

1.14 CONSTRUCTION MANPOWER AND EQUIPMENT REPORT

The Contractor shall submit executed CENAO Form 987, Construction Manpower and Equipment Report daily. The report shall include manpower and equipment for the general and subcontractors. Forms are available from the Contracting Officer.

1.15 PURCHASE ORDERS

To ensure proper expediting of orders the Contractor and his subcontractors shall furnish to the Contracting Officer, one copy of each purchase order covering supplies or services required for performance of the work. Each purchase order shall clearly indicate the date of placement, the date delivery is required in order to avoid delay in the scheduled progress of the work, and the date delivery is promised by the supplier or producer. Copies of purchase orders shall be forwarded on the date issued.

1.16 PROFIT

1.16.1 Weighted Guidelines

Weighted guidelines method of determining profit shall be used on any equitable adjustment change order or modification issued under this contract. The profit factors shall be as follows:

Factor	Rate	Weight	Value
Degree of Risk	20		
Relative difficulty of work	15		
Size of Job	15		
Period of performance	15		
Contractor's investment	05		
Assistance by Government	05		
Subcontracting	25		
	100		

1.16.2 Value

Based on the circumstances of each procurement action, each of the above factors shall be weighted from .03 to .12 as indicated below. The value shall be obtained by multiplying the rate by the weight. The value column when totalled indicates the fair and reasonable profit percentage under the circumstances of the particular procurement.

1.16.2.1 Degree of Risk

Where the work involves no risk or the degree of risk is very small, the weighting should be .03; as the degree of risk increases, the weighting

should be increased up to a maximum of .12. Lump sum items will have, generally, a higher weighted value than the unit price items for which quantities are provided. Other things to consider: the portion of the work to be done by subcontractors, nature of work, where work is to be performed, reasonableness of negotiated costs, amount of labor included in costs, and whether the negotiation is before or after performance of work.

1.16.2.2 Relative Difficulty of Work

It the work is most difficult and complex, the weighting should be .12 and should be proportionately reduced to .03 on the simplest of jobs. This factor is tied in to some extent with the degree of risk. Some things to consider: the nature of the work, by whom it is to be done, where, and what is the time schedule.

1.16.2.3 Size of Job

All work not in excess of $100,000 shall be weighted at .12. Work estimated between $100,000 and $5,000,000 shall be proportionately weighted from .12 to .05.

1.16.2.4 Periods of Performance

Jobs in excess of 24 months are to be weighted at .12. Jobs of lesser duration are to be proportionately weighted to a minimum of .03 for jobs not to exceed 30 days. No weight where additional time not required.

1.16.2.5 Contractor's Investment

To be weighted from .03 to .12 on the basis of below average, average, and above average. Things to consider: amount of subcontracting, mobilization payment item, Government furnished property, equipment and facilities, and expediting assistance.

1.16.2.6 Assistance by Government

To be weighted from .12 to .03 on the basis of average to above average. Things to consider: use of Government owned property, equipment and facilities, and expediting assistance.

1.16.2.7 Subcontracting

To be weighted inversely proportional to the amount of subcontracting. Where 80 percent or more of the work is to be subcontracted, the weighting is to be .03 and such weighting proportionately increased to .12 where all the work is performed by the Contractor's own forces.

PART 2 PRODUCTS (THIS PART NOT USED)

PART 3 EXECUTION (THIS PART NOT USED)

-- End of Section --

SECTION 01090

SOURCES FOR REFERENCE PUBLICATIONS
03/98

PART 1 GENERAL

1.1 REFERENCES

Various publications are referenced in other sections of the specifications to establish requirements for the work. These references are identified in each section by document number, date and title. The document number used in the citation is the number assigned by the sponsoring organization, e.g. UL 1 (1993; Rev thru Jan 1995) Flexible Metal Conduit. However, when the sponsoring organization has not assigned a number to a document, an identifying number has been assigned for convenience, e.g. UL's unnumbered 1995 edition of their Building Materials Directory is identified as UL-01 (1995) Building Materials Directory. The sponsoring organization number (UL 1) can be distinguished from an assigned identifying number (UL-1) by the dash mark (-).

1.2 ORDERING INFORMATION

The addresses of the organizations whose publications are referenced in other sections of these specifications are listed below, and if the source of the publications is different from the address of the sponsoring organization, that information is also provided. Documents listed in the specifications with numbers which were not assigned by the sponsoring organization should be ordered from the source by title rather than by number.

AGRICULTURAL MARKETING SERVICE (AMS)
Seed Regulatory and Testing Branch
USDA, AMS, LS Div.
Bldg. 506, BARC-East
Soil Conservation Rd.
Beltsville, MD 20705
Ph: 301-504-9430

AIR CONDITIONING AND REFRIGERATION INSTITUTE (ARI)
4301 Fairfax Dr., Suite 425
ATTN: Pubs Dept.
Arlington, VA 22203
Ph: 703-524-8800
Fax: 703-528-3816
Internet E-Mail: ari@dgsys.com

AIR MOVEMENT AND CONTROL ASSOCIATION (AMCA)
30 W. University Dr.
Arlington Heights, IL 60004-1893
Ph: 708-394-0404
Fax: 708-253-0088

AMERICAN ASSOCIATION OF STATE HIGHWAY AND TRANSPORTATION OFFICIALS (AASHTO)
444 N. Capital St., NW, Suite 249

Washington, DC 20001
Ph: 202-624-5800
Fax: 202-624-5806

ACI INTERNATIONAL (ACI)
P.O. Box 9094
Farmington Hills, MI 48333
Ph: 313-532-2600
Fax: 313-533-4747

AMERICAN HARDBOARD ASSOCIATION (AHA)
1210 W. Northwest Highway
Palatine, IL 60067
Ph: 708-934-8800
Fax: 708-934-8803

AMERICAN NATIONAL STANDARDS INSTITUTE (ANSI)
11 West 42nd St
New York, NY 10036
Ph: 212-642-4900
Fax: 212-302-1286

AMERICAN PETROLEUM INSTITUTE (API)
1220 L St., NW
Washington, DC 20005
Ph: 202-682-8375
Fax: 202-962-4776

AMERICAN SOCIETY FOR TESTING AND MATERIALS (ASTM)
1916 Race St.
Philadelphia, PA 19103
Ph: 215-299-5585
Fax: 215-977-9679

AMERICAN SOCIETY OF HEATING, REFRIGERATING AND AIR-CONDITIONING ENGINEERS (ASHRAE)
1791 Tullie Cir., NE
Atlanta, GA 30329-2305
Ph: 404-636-8400 Fax: 404-321-5478

AMERICAN SOCIETY OF SANITARY ENGINEERING (ASSE)
P.O. Box 40362
Bay Village, OH 44140
Ph: 216-835-3040
Fax: 216-835-3488

AMERICAN WATER WORKS ASSOCIATION (AWWA)
6666 West Quincy
Denver, CO 80235
Ph: 800-926-7337
Fax: 303-795-1989

AMERICAN WELDING SOCIETY (AWS)
550 N.W. LeJeune Road
Miami, FL 33126
Ph: 800-443-9353
Fax: 305-443-7559

ASBESTOS CEMENT PIPE PRODUCERS ASSOCIATION (ACPPA)

1745 Jefferson Davis Highway, Suite 406
Arlington, VA 22202
Ph: 703-412-1153
Fax: 703-412-1152

ASSOCIATION OF EDISON ILLUMINATING COMPANIES (AEIC)
600 No. 18th St.
P.O. Box 2641
Birmingham, AL 35291-0992
Ph: 205-250-2530
Fax: 205-250-2540

CAST IRON SOIL PIPE INSTITUTE (CISPI)
5959 Shallowford Rd., Suite 419
Chattanooga, TN 37421
Ph: 615-892-0137
Fax: 615-892-0817

CODE OF FEDERAL REGULATIONS (CFR)
Order from:
Superintendent of Documents
Government Printing Office
P.O. Box 371954
Pittsburgh, PA 15250-7954
Ph: 202-512-1800
Fax: 202-512-2250

COMMERCIAL ITEM DESCRIPTIONS (CID)
Order from:
Standardization Documents Order Desk
Bldg 4D
700 Robbins Av
Philadelphia, PA 19111-5094
Ph: 215-697-2179
Fax: 215-697-2978

CONCRETE REINFORCING STEEL INSTITUTE (CRSI)
933 No. Plum Grove Rd.
Schaumburg, IL 60173-4758
Ph: 708-517-1200
Fax: 708-517-1206

COPPER DEVELOPMENT ASSOCIATION (CDA)
260 Madison Ave.
New York, NY 10016
Ph: 212-251-7200
Fax: 212-251-7234

CORPS OF ENGINEERS (COE)
Order from:
U.S. Army Engineer Waterways Experiment Station
ATTN: Technical Report Distribution Section, Services Branch, TIC
3909 Halls Ferry Rd.
Vicksburg, MS 39180-6199
Ph: 601-634-2355
Fax: 601-634-2506

DUCTILE IRON PIPE RESEARCH ASSOCIATION (DIPRA)

245 Riverchase Parkway East, Suite 0
Birmingham, AL 35244
Ph: 205-988-9870
Fax: 205-988-9822

ENVIRONMENTAL PROTECTION AGENCY (EPA)
Public Information Center
401 M St., SW
Washington, DC 20460
Ph: 202-260-2080

HYDRAULIC INSTITUTE (HI)
9 Sylvan Way, Suite 180
Parsippany, NJ 07054-3802
Ph: 201-267-9700
Publication Hotline: 708-364-6206

ILLUMINATING ENGINEERING SOCIETY OF NORTH AMERICA (IESNA)
120 Wall St., 17th Floor
New York, NY 10005-4001
Ph: 212-248-5000
Fax: 212-248-5017

INSECT SCREENING WEAVERS ASSOCIATION (ISWA)

P.O. Box 1018
Ossining, NY 10562
Ph: 914-962-9052
Fax: 914-923-3031

INSTITUTE OF ELECTRICAL AND ELECTRONICS ENGINEERS (IEEE)
445 Hoes Ln, P. O. Box 1331
Piscataway, NJ 08855-1331
Ph: 800-678-4333
Fax: 908-981-9667

MANUFACTURERS STANDARDIZATION SOCIETY OF THE VALVE AND FITTINGS INDUSTRY (MSS)
127 Park St., NE
Vienna, VA 22180
Ph: 703-281-6613
Fax: 703-281-6671

NATIONAL ASSOCIATION OF ARCHITECTURAL METAL MANUFACTURERS (NAAMM)
11 So. LaSalle St., Suite 1400
Chicago, IL 60603
Ph: 312-201-0101
FAX: 312-201-0214

NATIONAL ELECTRICAL MANUFACTURERS ASSOCIATION (NEMA)
2101 L St., NW, Suite 300
Washington, DC 20037-1526
Ph: 202-457-8474
Fax: 202-457-8473

NATIONAL FIRE PROTECTION ASSOCIATION (NFPA)
1 Batterymarch Park
P.O. Box 9101
Quincy, MA 02269-9101

Ph: 800-344-3555
Fax: 800-593-6372

NATIONAL READY-MIXED CONCRETE ASSOCIATION (NRMCA)
900 Spring St.
Silver Spring, MD 20910
Ph: 301-587-1400
Fax: 301-585-4219

NSF INTERNATIONAL (NSF)
3475 Plymouth Rd.
P.O. Box 130140
Ann Arbor, MI 48113-0140
Ph: 313-769-8010
Fax: 313-769-0109

SHEET METAL & AIR CONDITIONING CONTRACTORS' NATIONAL ASSOCIATION (SMACNA)
P.O. Box 221230
Chantilly, VA 22022-1230
Ph: 703-803-2989
Fax: 703-803-3732

UNDERWRITERS LABORATORIES (UL)
333 Pfingsten Rd.
Northbrook, IL 60062-2096
Ph: 800-704-4050
Fax: 847-509-6249

UNI-BELL PVC PIPE ASSOCIATION (UBPPA)
2655 Villa Creek Dr., Suite 155
Dallas, TX 75234
Ph: 214-243-3902
Fax: 214-243-3907

PART 2 PRODUCTS (Not Used)

PART 3 EXECUTION (Not Used)

-- End of Section --

SECTION 01111
SAFETY AND HEALTH REQUIREMENTS
03/98

PART 1 GENERAL

1.1 REFERENCES

The publications listed below form a part of this specification to the extent referenced. The publications are referred to in the text by basic designation only.

ENGINEERING MANUALS

EM 385-1-1	(1996) Safety and Health Requirements Manual

1.2 SUBMITTALS

Government approval is required for submittals with a "GA" designation; submittals having an "FIO" designation are for information only. The following shall be submitted in accordance with Section 01300 SUBMITTAL DESCRIPTIONS:

SD-01 SD Data

Safety and Health Plan(Accident Prevention Plan); GA.

1.3 SAFETY REQUIREMENTS AND ACCIDENT PREVENTION

1.3.1 l Standards

The Contractor shall comply with Occupational Safety and Health Act (OSHA) Standards, the Corps of Engineers Manual EM 385-1-1, "Safety and Health Requirements Manual," NFPA 101, and state, local, and facility safety requirements.

1.3.2 SAFETY AND HEALTH PLAN

1.3.2.1 Preparation and Implementation

An Accident Prevention Plan (APP) shall be prepared covering onsite work to be performed by the Contractor and all subcontractors, and shall at a minimum address the requirements for an Accident Prevention Plan (APP), as contained in Appendix A, EM 385-1-1. The Safety and Health Manager shall be responsible for the development, implementation and oversight of the APP. The APP shall establish, in detail, the protocols necessary for the anticipation, recognition, evaluation, and control of hazards associated with each task performed. The APP shall address general safety and health requirements and procedures. The level of detail provided in the APP shall be tailored to the type of work, complexity of operations to be performed, and hazards anticipated. Details about some activities may not be available when the initial APP is prepared and submitted. Therefore, the APP shall address, in as much detail as possible, anticipated tasks, their related hazards and anticipated control measures.

1.3.2.2 Acceptance and Modifications

Prior to submittal, the APP shall be signed and dated by the Contractor's Safety and Health Manager and the Site Superintendent. The APP shall be submitted for review at least 10 days prior to the Prework Safety Conference. Deficiencies in the APP will be discussed at the Prework Safety Conference, and the APP shall be revised to correct the deficiencies and resubmitted for acceptance. Onsite work shall not begin until the plan has been accepted. A copy of the written APP shall be maintained onsite. As work proceeds, the APP shall be adapted to new situations and new conditions. Changes and modifications to the accepted APP shall be made with the knowledge and concurrence of the Safety and Health Manager, the Site Superintendent, and the Contracting Officer. Should any unforeseen hazard become evident during the performance of the work, shall bring such hazard to the attention of the Safety and Health Manager, the Site Superintendent, and the Contracting Officer, both verbally and in writing, for resolution as soon as possible. In the interim, necessary action shall be taken to re-establish and maintain safe working conditions in order to safeguard onsite personnel, visitors, the public, and the environment. Disregard for the provisions of this specification or the accepted APP shall be cause for stopping of work until the matter has been rectified to the satisfaction of the Contracting Officer.

1.3.3 Corps of Engineers Standards

Corps of Engineers Manual EM 385-1-1, referred to in "ACCIDENT PREVENTION" article of Contract Clauses, is hereby supplemented or revised as follows:

1.3.3.1 Conflicts

When a conflict exists between the Corps of Engineers Safety and Health Requirements Manual, other safety requirements, or the contract plans and/or specifications, the most stringent requirement shall prevail. (NAOSA 5 FEB 87).

1.3.3.2 Front End Loader - Backhoe Machines

1.3.3.2.# Non-compliance Safety Check

All front end loader-backhoe machines and other machines, such as tractors that utilize a backhoe attachment, shall be checked for:

a. Exposed backhoe boom swing foot pedals.

b. Backhoe boom swing lever which can be reached by a man standing on the ground or on the outrigger support bracket.

1.3.3.2.# Correction and Fabrication of Non-compliance Safety Items

Where these conditions exist, guards shall be fabricated to:

a. Cover over exposed foot pedals to prevent someone from accidentally stepping on them.

b. Inclose the swing lever so as to preclude operation from the ground or from the outrigger support bracket.

1.3.3.3 Attendance at Safety Meetings

In order to allow for maximum attendance at weekly tool box meetings and monthly supervisor meetings by Corps of Engineers personnel, the Contractor

shall advise the CO's Office, a minimum of 48 hours before the start of each meeting, of the date, time and location of Safety Meetings.

1.3.3.4 Minutes of Safety Meetings

Minutes shall be prepared by the Contractor and forwarded to the Contracting Officer by close of business the next work day.

1.3.3.5 Protective Footwear

Protective footwear as defined by American National Standards Institute Z41 shall be worn by all working personnel on site.

1.3.3.6 Ground Fault Circuit Interrupters (GFCI)

GFCI's are required for work on this contract in accordance with EM 385-1-1. GFCI's are also required when using electric power extension cords.

1.3.3.7 Crawler-, Truck-, and Wheel-Mounted Cranes

Implementation of paragraph 16.D.05 shall include the following:

a. When a crane is performing duty cycle work (such as clamshell, dragline, grapple, or pile driving) it does not require anti-two block equipment. If the crane is required to make a non-duty cycle lift (for example, to lift a piece of equipment, a tool box, or supplies), it will be exempt from the anti-two block equipment requirements if the following procedures are implemented:

(1) an international orange warning device (warning flag, warning tape, or warning ball) is properly secured to the hoist line at a distance of 8 to 10 feet above the hoist rigging;

(2) the signalperson (or an individual designated as the signalperson) acts as a spotter to alert the crane operator with a "STOP" signal when the warning device approaches the boom tip and the crane operator ceases hoisting functions when alerted of this; and

(3) while the non-duty cycle lift is underway, the signal person shall not stand under the load, shall have no duties other than signalperson, and shall comply with the signaling requirements of EM 385-1-1;

b. Anti-two block devices are always required when hoisting personnel by crane or derrick.

PART 2 PRODUCTS (This Part Not Used)

PART 3 EXECUTION (This Part Not Used)

-- End of Section --

MASTER SPECIFICATION FOR MILITARY CONSTRUCTION

SECTION 01200
PROJECT MEETINGS

03/98

PART 1 GENERAL

1.1 SUBMITTALS (Not Applicable)

1.2 PRECONSTRUCTION CONFERENCE

1.2.1 Scheduling

After award of the construction contract and prior to the start of any construction work, the Contracting Officer (CO) will schedule and conduct a preconstruction conference. The Contractor's Project Manager, Superintendent and Quality Control System Manager shall attend this meeting. The Contractor is encouraged to have an officer of his company (Project Manager could be this person) and representation from each of his sub-contractors at the conference. This conference will be held at a location and time as specified by the CO.

1.2.2 Purpose

The purpose of this preconstruction conference is to enable the CO to outline the procedures that will be followed by the Government in its administration of this construction contract and to discuss the performance that will be expected from the Contractor. This conference will allow the Contractor an opportunity to ask questions about the Government's supervision and inspection of contract work, about security requirements, regulations, etc. The CO may invite Using Service personnel and any other Government personnel to attend this conference.

1.2.3 Discussion Items

The following is a list of items for discussion during the preconstruction conference. However, the Contracting Officer may include additional items for discussion as conditions and the work require.

a. Authority of the Area/Resident Engineer and organization of the Area/Resident office.

b. Contractor's Progress Schedule.

c. Correspondence Procedures.

d. Contractor Labor Standards Provisions.

e. Contract Modifications and Administrative Procedures.

f. Contractor's Administrative, Laydown and Storage Areas.

g. Procedures for Processing Submittals.

h. Payment Estimate Data and Procedures.

i. Contractor Utilities.

j. Security Requirements and Other Regulations, if applicable.

k. Government Furnished Equipment, if applicable.

l. Disposition of Salvage Property.

m. Contractor Insurance Requirements.

n. Value Engineering Program.

o. Contractor Performance Evaluation.

p. As-Built Drawings.

q. Single Point of Contact for Warranty of Construction.

r. Turnover of Completed Facilities.

1.3 OTHER MEETINGS

Other meetings are or may be scheduled to be held after the Preconstruction Conference, and such meetings may include the following:

a. Accident Prevention Safety Plan

b. Quality Control Plan.

c. Environmental Protection Plan.

d. Warranty Management Plan (Post Construction Warranty Conference)

1.4 FACILITY MEETINGS

The Facility may also schedule meetings with the Contractor through the CO during the progress of construction work.

1.5 MINUTES OF MEETINGS

The Government will prepare minutes of the meeting and will provide the Contractor with a signed original for review and concurrence. The minutes shall include all items discussed at the meeting and the Government will make all corrections provided by the Contractor and resubmit the corrected minutes to the Contractor within seven days.

1.6 Warranty Management Plan

The Contractor shall provide a Warranty Management Plan, not less than 30 days prior to the Post-Construction Warranty Conference. As a minimum, include a table, showing the requirements, and attach certificates:

a. List of warranties provided.

b. List of equipment, names of manufacturers and suppliers and phone numbers.

c. Period of warranties and Start Date.

d. List of Extended Warranties.

e. Warranty Certificates.

f. Single Point of Contact for Warranty of Construction.

PART 2 PRODUCTS (This Part Not Used)

PART 3 EXECUTION (This Part Not Used)

-- End of Section --

SECTION 01310

PROJECT SCHEDULE
03/98

PART 1 GENERAL

1.1 SUBMITTALS

Government approval is required for submittals with a "GA" designation; submittals having an "FIO" designation are for information only. The following shall be submitted in accordance with Section 01300 SUBMITTAL PROCEDURES:

SD-07 Schedules

Initial Project Schedule; GA. Preliminary Project Schedule; GA. Periodic Schedule Updates; GA.

Two copies of the schedules showing codes, values, categories, numbers, items, etc., as required.

SD-08 Statements

Qualifications; FIO.

Documentation showing qualifications of personnel preparing schedule reports.

SD-09 Reports

Narrative Report; FIO. Schedule Reports; FIO.

Three copies of the reports showing numbers, descriptions, dates, float, starts, finishes, durations, sequences, etc., as required.

1.2 QUALIFICATIONS

The Contractor shall designate an authorized representative who shall be responsible for the preparation of all required project schedule reports. This person shall have previously created and reviewed computerized schedules. Qualifications of this individual shall be submitted to the Contracting Officer for review with the Preliminary Project Schedule submission.

PART 2 PRODUCTS (Not Applicable)

PART 3 EXECUTION

3.1 GENERAL

Pursuant to the Contract Clause, SCHEDULE FOR CONSTRUCTION CONTRACTS a Project Schedule as described below shall be prepared. The scheduling of construction shall be the responsibility of the Contractor. Contractor management personnel shall actively participate in its development. Subcontractors and suppliers working on the project should also contribute in developing and maintaining an accurate Project Schedule. The approved Project Schedule shall be used to measure the progress of the work, to aid in evaluating time extensions, and to provide the basis of all progress

payments.

3.1.1 Scheduling Data Format

Scheduling data shall be in SDEF. Scheduling software, capable of producing an SDEF file (standard data exchange format), shall electronically transfer activity data into the Resident Management System (RMS) Contractor Quality Control Modules. RMS requirements are further described in 01440

3.2 BASIS FOR PAYMENT

The schedule shall be the basis for measuring Contractor progress. Lack of an approved schedule or scheduling personnel shall result in an inability of the Contracting Officer to evaluate Contractor progress for the purposes of payment. Failure of the Contractor to provide all information, as specified below, shall result in the disapproval of the entire Project Schedule submission and the inability of the Contracting Officer to evaluate Contractor progress for payment purposes. In the case where Project Schedule revisions have been directed by the Contracting Officer and those revisions have not been included in the Project Schedule, then the Contracting Officer may hold retainage up to the maximum allowed by contract, each payment period, until revisions to the Project Schedule have been made.

3.3 PROJECT SCHEDULE

The computer software system utilized by the Contractor to produce the Project Schedule shall be capable of providing all requirements of this specification. Failure of the Contractor to meet the requirements of this specification shall result in the disapproval of the schedule. Manual methods used to produce any required information shall require approval by the Contracting Officer.

3.3.1 Use of the Critical Path Method

The Critical Path Method (CPM) of network calculation shall be used to generate the Project Schedule. The Contractor shall provide the Project Schedule in either the Precedence Diagram Method (PDM) or the Arrow Diagram Method (ADM).

3.3.2 Level of Detail Required

With the exception of the initial and preliminary schedule submission, the Project Schedule shall include an appropriate level of detail. Failure to develop or update the Project Schedule or provide data to the Contracting Officer at the appropriate level of detail, as specified by the Contracting Officer, shall result in the disapproval of the schedule. The Contracting Officer will use, but is not limited to, the following conditions to determine the appropriate level of detail to be used in the Project Schedule.

3.3.2.1 Activity Durations

Contractor submissions shall be required to follow the direction of the Contracting Officer regarding reasonable activity durations. Reasonable durations are those that allow the progress of activities to be accurately determined between payment periods. A rule of thumb, that the Contractor should use, is that less than 2 percent of all non-procurement activities'

Original Durations shall be greater than 20 days.

3.3.2.2 Procurement Activities

Tasks related to the procurement of long lead materials or equipment shall be included as separate activities in the project schedule. Long lead materials and equipment are those materials that have a procurement cycle of over 90 days. Examples of procurement process activities include, but are not limited to: submittals, approvals, procurement, fabrication, delivery, installation, start-up, and testing.

3.3.2.3 Government Activities

Government and other agencies activities that could impact progress shall be shown. These activities include, but are not limited to: approvals, inspections, utility tie-in, Government Furnished Equipment (GFE) and notice to proceed for phasing requirements.

3.3.2.4 Responsibility

All activities shall be identified in the project schedule by the party responsible to perform the work. Responsibility includes, but is not limited to, the subcontracting firm, contractor work force, or government agency performing a given task. Activities shall not belong to more than one responsible party. The responsible party for each activity shall be identified by the Responsibility Code.

3.3.2.5 Work Areas

All activities shall be identified in the project schedule by the work area in which the activity occurs. Activities shall not be allowed to cover more than one work area. The work area of each activity shall be identified by the Work Area Code.

3.3.2.6 Modification or Claim Number

Any activity that is added or changed by contract modification or used to justify claimed time shall be identified by a mod or claim code that changed the activity. Activities shall not belong to more than one modification or claim item. The modification or claim number of each activity shall be identified by the Mod or Claim Number.

3.3.2.7 Bid Item

Should the contract consist of separate bid or Contract Line Item Numbers (CLINs) all activities shall be identified in the project schedule by the Bid Item or CLIN to which the activity belongs. An activity shall not contain work in more than one bid item or CLIN.

3.3.2.8 Phase of Work

Should the contract consist of distinct or separate phases of work, all activities shall be identified in the project schedule by the phases of work in which the activity occurs. Activities shall not be allowed to contain work in more than one phase of work. The project phase of each activity shall be by the unique Phase of Work Code.

3.3.2.9 Category of Work

All Activities on the critical path shall be identified in the project schedule according to the category of work which best describes the activity. Category of work refers, but is not limited to, to the procurement chain of activities including such items as submittals, approvals, procurement, fabrication, delivery, installation, start-up, and testing. The category of work for each activity shall be identified by the Category of Work Code.

3.3.2.10 Feature of Work

All activities shall be identified in the project schedule according to the feature of work to which the activity belongs. Feature of work refers, but is not limited to a work breakdown structure for the project. The feature of work for each activity shall be identified by the Feature of Work Code.

3.3.3 Scheduled Project Completion

The schedule interval shall extend from notice-to-proceed to the contract completion date.

3.3.3.1 Project Start Date

For PDMs, the schedule shall start no earlier than the date that the Notice to Proceed (NTP) was acknowledged. The Contractor shall include as the first activity in the project schedule an activity called "Start Project". The "Start Project" activity shall have: a "ES" constraint, a constraint date equal to the date that the NTP was acknowledged, and a zero day duration.

3.3.3.2 Constraint of Last Activity

Completion of the last activity in the schedule shall be constrained by the contract completion date. Calculation on project updates shall be such that if the early finish of the last activity falls after the contract completion date, then the float calculation shall reflect a negative float on the critical path. For PDMs, the Contractor shall include as the last activity in the project schedule an activity call "End Project". The "End Project" activity shall have: a "LF" constraint, a constraint date equal to the completion date for the project, and a zero day duration.

3.3.3.3 Early Project Completion

In the event the project schedule shows completion of the project prior to the contract completion date, the Contractor shall identify those activities that have been accelerated and/or those activities that are scheduled in parallel to support the Contractor's "early" completion. Contractor shall specifically address each of the activities noted at every project schedule update period to assist the Contracting Officer to evaluate the Contractor's ability to actually complete prior to the contract period.

3.3.4 Interim Completion Dates

Contractually specified interim completion dates shall also be constrained to show negative float if the early finish date of the last activity in that phase falls after the interim completion date.

3.3.4.1 Start Phase

For distinct or separate phases of work, the Contractor shall include as the first activity for a project phase an activity called "Start Phase X" where "X" refers to the phase of work. The "Start Phase X" activity shall have: a "ES" constraint, a constraint date equal to the date that the NTP was acknowledged, and a zero day duration.

3.3.4.2 End Phase

For distinct or separate phases of work, the Contractor shall include as the last activity in a project phase an activity called "End Phase X" where "X" refers to the phase of work. The "End Phase X" activity shall have: a "LF" constraint, a constraint date equal to the completion date for the project, and a zero day duration.

3.3.4.3 Phase X

For distinct or separate phases of work, the Contractor shall include a hammock type activity for each project phase called "Phase X" where "X:" refers to the phase of work. The "Phase X" activity shall be logically tied to the earliest and latest activities in the phase.

3.3.5 Default Progress Data Disallowed

Actual Start and Finish dates shall not be automatically updated by default mechanisms that may be included in CPM scheduling software systems. Actual Start and Finish dates on the CPM schedule shall match those dates provided from Contractor Quality Control Reports. Failure of the Contractor to document the Actual Start and Finish dates on the Daily Quality Control report for every in progress or completed activity and insure that the data contained on the Daily Quality Control reports is the sole basis for schedule updating shall result in the disapproval of the Contractor's schedule and the inability of the Contracting Officer to evaluate Contractor progress for payment purposes.

3.3.6 Out-of-Sequence Progress

Activities that have posted progress without predecessors being completed (Out-of-Sequence Progress) shall be allowed only by the case-by-case approval of the Contracting Officer. The Contracting Officer may direct that changes in schedule logic be made to correct any or all out-of-sequence work.

3.3.7 Extended Non-Work Periods

Designation of Holidays to account for non-work periods of over 5 days shall not be allowed. Non-work periods of over 5 days shall be identified by addition of activities that represent the delays. Modifications to the logic of the project schedule shall be made to link those activities that may have been impacted by the delays to the newly added delay activities.

3.3.8 Negative Lags

Lag durations contained in the project schedule shall not have a negative value.

3.4 PROJECT SCHEDULE SUBMISSIONS

The Contractor shall provide the submissions as described below. The data disk, reports, and network diagrams required for each submission are

contained in paragraph SUBMISSION REQUIREMENTS.

3.4.1 Preliminary Project Schedule Submission

The Preliminary Project Schedule, defining the Contractor's planned operations for the first 60 calendar days shall be submitted for approval within 20 calendar days after Notice to Proceed is acknowledged. The approved preliminary schedule shall be used for payment purposes not to exceed 60 calendar days after Notice to Proceed.

3.4.2 Initial Project Schedule Submission

The Initial Project Schedule shall be submitted for approval within 40 calendar days after Notice to Proceed. The schedule shall provide a reasonable sequence of activities which represent work through the entire project and shall be at a reasonable level of detail.

3.4.3 Periodic Schedule Updates

Based on the result of progress meetings, specified in "Periodic Progress Meetings," the Contractor shall submit periodic schedule updates. These submissions shall enable the Contracting Officer or to assess Contractor's progress. If the Contractor fails or refuses to furnish the information and project schedule data, which in the judgement of the Contracting Officer or authorized representative, is necessary for verifying the contractor's progress, the Contractor shall be deemed not to have provided an estimate upon which progress payment may be made.

3.4.4 Standard Activity Coding Dictionary

The Contractor shall submit, with the Initial Project Schedule, a coding scheme that shall be used throughout the project for all activity codes contained in the schedule. The coding scheme submitted shall list the values for each activity code category and translate those values into project specific designations. For example, a Responsibility Code Value, "ELE", may be identified as "Electrical Subcontractor." Activity code values shall represent the same information throughout the duration of the contract. Once approved with the Initial Project Schedule submission, changes to the activity coding scheme must be approved by the Contracting Officer.

3.5 SUBMISSION REQUIREMENTS

The following items shall be submitted by the Contractor for the initial submission, and every periodic project schedule update throughout the life of the project:

3.5.1 Data Disks

Two sets of data disks containing the project schedule shall be provided. Data on the disks shall be in the format specified by the Contracting Officer.

3.5.1.1 File Medium

Required data shall be submitted on 3.5" disks, formatted to hold 1.44 MB of data, under the Windows 3.1 operating system.

3.5.1.2 Disk Label

A permanent exterior label shall be affixed to each disk submitted. The label shall indicate the type of schedule (Initial, Update, or Change), full contract number, project name, project location, Contractor's name data date, name and telephone number or person responsible for the schedule, and the operating system and version version used to format the disk.

3.5.1.3 File Name

Each file submitted shall have a name related to either the schedule data date, project name, or contract number. The Contractor shall develop a naming convention that will insure that the names of the files submitted are unique. the Contractor shall submit the file naming convention to the Contracting Officer for approval.

3.5.2 Narrative Report

A Narrative Report shall be provided with each update of the project schedule. This report shall be provided as the basis of the Contractor's progress payment request. The Narrative Report shall include: a description of activities along the 3 most critical paths, a description of current and anticipated problem areas or delaying factors and their impact, and an explanation of corrective actions taken.

3.5.3 Approved Changes Verification

Only project schedule changes that have been previously approved by the Contracting Officer shall be included in the schedule submission. The Narrative Report shall specifically reference, on an activity by activity basis, all changes made since the previous period and relate each change to documented, approved schedule changes.

3.5.4 Schedule Reports

The format for each activity for the schedule reports listed below shall contain: Activity Numbers, Activity Description, Original Duration, Remaining Duration, Early Start Date, Early Finish Date, Late Start Date, Late Finish Date, Total Float. Actual Start and Actual Finish Dates shall be printed for those activities in-progress or completed.

3.5.4.1 Activity Report

A list of all activities sorted according to activity number for PDMs or "I-NODE" AND "J-NODE" for ADMs and then sorted according to Early Start Date. For completed activities the Actual Start Date shall be used as the secondary sort.

3.5.4.2 Logic Report

A list of Preceding and Succeeding activities for every activity in ascending order by activity number and then sorted according to Early Start Date. For completed activities the Actual Start Date shall be used as the secondary sort.

3.5.4.3 Total Float Report

A list of all activities sorted in ascending order of total float. Activities which have the same amount of total float shall be listed in

ascending order of Early Start Dates.

3.5.4.4 Earnings Report

A compilation of the Contractor's Total Earnings on the project from the Notice to Proceed until the most recent Monthly Progress Meeting. This report shall reflect the Earnings of specific activities based on the agreements made in the field and approved between the Contractor and Contracting Officer at the most recent Monthly Progress Meeting. Provided that the Contractor has provided a complete schedule update, this report shall serve as the basis of determining Contractor Payment. Activities shall be grouped by bid item and sorted by activity numbers. This report shall: sum all activities in a bid item and provide a bid item percent; complete and sum all bid items to provide a total project percent complete. The printed report shall contain, for each activity: Activity Number for PDMs or "i-node" and "j-node" for ADMs, Activity Description, Original Budgeted Amount, Total Quantity, Quantity to Date, Percent Complete (based on cost), Earnings to Date.

3.5.5 Network Diagram

The network diagram shall be required on the initial schedule submission, and on monthly schedule update submissions. The network diagram shall depict and display the order and interdependence of activities and the sequence in which the work is to be accomplished. The Contracting Officer will use, but is not limited to, the following conditions to review compliance with this paragraph:

3.5.5.1 Continuous Flow

Diagrams shall show a continuous flow from left to right with no arrows from right to left. The activity or event number, description, duration, and estimated earned value shall be shown on the diagram.

3.5.5.2 Project Milestone Dates

Dates shall be shown on the diagram for start of project, any contract required interim completion dates, and contract completion dates.

3.5.5.3 Critical Path

The critical path shall be clearly shown.

3.5.5.4 Banding

Activities shall be grouped to assist in the understanding of the activity sequence. Typically, this flow will group activities by category of work, work area and/or responsibility.

3.5.5.5 S-Curves

Earnings curves showing projected early and late earnings and earnings to date.

3.6 PERIODIC PROGRESS MEETINGS

Progress meetings to discuss payment shall include a monthly on-site meeting or other regular intervals mutually agreed to at the preconstruction conference. During this meeting the Contractor will

describe, on an activity by activity basis, all proposed revisions and adjustments to the project schedule required to reflect the current status of the project. The Contracting Officer will approve activity progress, proposed revisions, and adjustments as appropriate.

3.6.1 Meeting Attendance

The Contractor's Project Manager and Scheduler shall attend the regular progress meeting.

3.6.2 Update Submission Following Progress Meeting

A complete update of the project schedule containing all approved progress, revisions, and adjustments, based on the regular progress meeting, shall be submitted not later than 4 working days after the monthly progress meeting.

3.6.3 Progress Meeting Contents

Update information, including Actual Start Dates, Actual Finish Dates, Remaining Durations, and Cost to Date shall be subject to the approval of the Contracting Officer. The following minimum set of items which the Contractor shall address, on an activity by activity basis, during each progress meeting.

3.6.3.1 Start and Finish Dates

The Actual Start and Actual Finish dates for each activity currently in-progress or completed activities.

3.6.3.2 Time Completion

The estimated Remaining Duration for each activity in-progress. Time-based progress calculations must be based on Remaining Duration for each activity.

3.6.3.3 Cost Completion

The earnings for each activity started. Payment shall be based on earnings for each in-progress or completed activity. Payment for individual activities shall not be made for work that contains quality defects. A portion of the overall project amount may be retained based on delays of activities.

3.6.3.4 Logic Changes

All logic changes pertaining to Notice to Proceed on change orders, change orders to be incorporated into the schedule, contractor proposed changes in work sequence, corrections to schedule logic for out-of-sequence progress, and other changes that have been made pursuant to contract provisions shall be specifically identified and discussed.

3.6.3.5 Other Changes

Other changes required due to delays in completion of any activity or group of activities are those delays beyond the Contractors control such as strikes and unusual weather. Also included are delays encountered due to submittals, Government Activities, deliveries or work stoppage which makes re-planning the work necessary, and when the schedule does not represent the actual prosecution and progress of the work.

3.7 REQUESTS FOR TIME EXTENSIONS

In the event the Contractor requests an extension of the contract completion date, he shall furnish such justification, project schedule data and supporting evidence as the Contracting Officer may deem necessary for a determination as to whether or not the Contractor is entitled to an extension of time under the provisions of the contract. Submission of proof of delay, based on revised activity logic, duration, and costs (updated to the specific date that the delay occurred) is obligatory to any approvals.

3.7.1 Justification of Delay

The project schedule must clearly display that the Contractor has used, in full, all the float time available for the work involved with this request. The Contracting Officer's determination as to the number of allowable days of contract extension, shall be based upon the project schedule updates in effect for the time period in question and other factual information. Actual delays that are found to be caused by the Contractor's own actions, which result in the extension of the schedule, shall not be a cause for a time extension to the contract completion date.

3.7.2 Submission Requirements

The Contractor shall submit a justification for each request for a change in the contract completion date of under two weeks based upon the most recent schedule update at the time of the Notice to Proceed or constructive direction issued for the change. Such a request shall be in accordance with the requirements of other appropriate Contract Clauses and shall include, as a minimum:

a. A list of affected activities, with their associated project schedule activity number.

b. A brief explanation of the causes of the change.

c. An analysis of the overall impact of the changes proposed.

d. A sub-network of the affected area.

Activities impacted in each justification for change shall be identified by a unique activity code contained in the required data file.

3.7.3 Additional Submission Requirements

For any request for time extension for over 2 weeks, the Contracting Officer may request an interim update with revised activities for a specific change request. The Contractor shall provide this disk within 4 days of the Contracting Officer's request.

3.8 DIRECTED CHANGES

If Notice to Proceed (NTP) is issued for changes prior to settlement of price and/or time, the Contractor shall submit proposed schedule revisions to the Contracting Officer within 2 weeks of the NTP being issued. The proposed revisions to the schedule will be approved by the Contracting Officer prior to inclusion of those changes within the project schedule. If the Contractor fails to submit the proposed revisions, the Contracting Officer may furnish the Contractor suggested revisions to the project

schedule. The Contractor shall include these revisions in the project schedule until the Contractor submits revisions, and final changes and impacts have been negotiated. If the Contractor has any objections to the revisions furnished by the Contracting Officer, then the Contractor shall advise the Contracting Officer within 2 weeks of receipt of the revisions. Regardless of the objections, the Contractor will continue to update their schedule with the Contracting Officer's revisions until a mutual agreement in the revisions may be made. If the Contractor fails to submit alternative revisions within 2 weeks of receipt of the Contracting Officer's proposed revisions, the Contractor will be deemed to have concurred with the Contracting Officer's proposed revisions. The proposed revisions will then be the basis for an equitable adjustment for performance of the work.

3.9 OWNERSHIP OF FLOAT

Float available in the schedule, at any time, shall not be considered for the exclusive use of either the Government or the Contractor.

-- End of Section --

SECTION 01312

RESIDENT MANAGEMENT SYSTEM (RMS)
05/00

PART 1 GENERAL

1.1 GENERAL

The Government will use the Resident Management System to assist in its monitoring and administration of this contract. The Contractor shall use the Government-furnished Construction Contractor Module, referred to as RMS-QC (QC for Quality Control), to record, maintain, and submit various information throughout the contract period. This joint Government-Contractor use of RMS-W and RMS-QC will facilitate electronic exchange of information and overall management of the contract. RMS-QC provides the means for the Contractor to input, track, and electronically share information with the Government in the following areas:

Administration
Finances
Quality Control
Submittal Monitoring
Scheduling
Import/Export of Data

1.1.1 Correspondence and Electronic Communications

For ease and speed of communications, both Government and Contractor will, to the maximum extent feasible, exchange correspondence and other documents in electronic format. Correspondence, pay requests and other documents comprising the official contract record shall also be provided in paper format, with signatures and dates where necessary. Paper documents will govern, in the event of discrepancy with the electronic version.

1.1.2 Other Factors

Particular attention is directed to Contract Clause, "Schedules for Construction Contracts", Contract Clause, "Payments", Section 01320, "Project Schedule", Section 01330, SUBMITTAL PROCEDURES, and Section 01451, CONTRACTOR QUALITY CONTROL, which have a direct relationship to the reporting to be accomplished through RMS-QC. Also, there is no separate payment for establishing and maintaining the RMS-QC database; all costs associated therewith shall be included in the contract pricing for the work.

1.2 RMS-QC SOFTWARE

RMS-QC is a MSWindows-based program that can be run on a stand-alone personal computer or on a network. The Government will make available the RMS-QC software to the Contractor after award of the construction contract. Prior to the Pre-Construction Conference, the Contractor shall be responsible to download, install and use the latest version of the RMS-QC software from the Government's RMS Internet Website. Upon specific justification and request by the Contractor, the Government can provide RMS-QC on 3-1/2" high-density diskettes or CD-ROM. Any program updates of RMS-QC will be made available to the Contractor via the Government RMS Website as they become available.

1.3 SYSTEM REQUIREMENTS

The following listed hardware and software is the minimum system configuration that the Contractor shall have to run RMS-QC:

Hardware

IBM-compatible PC with 200 MHz Pentium or higher processor

32+ MB RAM

4 GB hard drive disk space for sole use by the RMS-QC system

3 1/2 inch high-density floppy drive

Compact disk (CD) Reader

Color monitor

Laser printer compatible with HP LaserJet III or better, with minimum 4 MB installed memory.

Connection to the Internet, minimum 28 BPS

Software

Microsoft (MS) Access 97 or newer version database software

MS Windows 95 or newer version operating system (MS Windows NT 4.0 or newer is recommended)

Word Processing software compatible with MS Word 97 or newer

Internet browser

The Contractor's computer system shall be protected by virus protection software that is regularly upgraded with all issued manufacturer's updates throughout the life of the contract.

Electronic mail (E-mail) compatible with MS Outlook

1.4 RELATED INFORMATION

1.4.1 RMS-QC User Guide

After contract award, the Contractor shall download instructions for the installation and use of RMS-QC from the Government RMS Internet Website; the Contractor can obtain the current address from the Government. In case of justifiable difficulties, the Government will provide the Contractor with a CD-ROM containing these instructions.

1.5 CONTRACT DATABASE

Prior to the pre-construction conference, the Government shall provide the Contractor with basic contract award data to use for RMS-QC. The Government will provide data updates to the Contractor as needed, generally by files attached to E-mail. These updates will generally consist of submittal reviews, correspondence status, QA comments, and other administrative and QA data.

1.6 DATABASE MAINTENANCE

The Contractor shall establish, maintain, and update data for the contract in the RMS-QC database throughout the duration of the contract. The Contractor shall establish and maintain the RMS-QC database at the Contractor's site office. Data updates to the Government shall be submitted by E-mail with file attachments, e.g., daily reports, schedule updates, payment requests. If permitted by the Contracting Officer, a data diskette or CD-ROM may be used instead of E-mail (see Paragraph DATA SUBMISSION VIA COMPUTER DISKETTE OR CD-ROM). The RMS-QC database typically shall include current data on the following items:

1.6.1 Administration

1.6.1.1 Contractor Information

The database shall contain the Contractor's name, address, telephone numbers, management staff, and other required items. Within 14 calendar days of receipt of RMS-QC software from the Government, the Contractor shall deliver Contractor administrative data in electronic format via E-mail.

1.6.1.2 Subcontractor Information

The database shall contain the name, trade, address, phone numbers, and other required information for all subcontractors. A subcontractor must be listed separately for each trade to be performed. Each subcontractor/trade shall be assigned a unique Responsibility Code, provided in RMS-QC. Within 14 calendar days of receipt of RMS-QC software from the Government, the Contractor shall deliver subcontractor administrative data in electronic format via E-mail.

1.6.1.3 Correspondence

All Contractor correspondence to the Government shall be identified with a serial number. Correspondence initiated by the Contractor's site office shall be prefixed with "S". Letters initiated by the Contractor's home (main) office shall be prefixed with "H". Letters shall be numbered starting from 0001. (e.g., H-0001 or S-0001). The Government's letters to the Contractor will be prefixed with "C".

1.6.1.4 Equipment

The Contractor's RMS-QC database shall contain a current list of equipment planned for use or being used on the jobsite, including the most recent and planned equipment inspection dates.

1.6.1.5 Management Reporting

RMS-QC includes a number of reports that Contractor management can use to track the status of the project. The value of these reports is reflective of the quality of the data input, and is maintained in the various sections of RMS-QC. Among these reports are: Progress Payment Request worksheet, QA/QC comments, Submittal Register Status, Three-Phase Inspection checklists.

1.6.2 Finances

1.6.2.1 Pay Activity Data

The RMS-QC database shall include a list of pay activities that the Contractor shall develop in conjunction with the construction schedule. The sum of all pay activities shall be equal to the total contract amount, including modifications. Pay activities shall be grouped by Contract Line Item Number (CLIN), and the sum of the activities shall equal the amount of each CLIN. The total of all CLINs equals the Contract Amount.

1.6.2.2 Payement Requests

All progress payment requests shall be prepared using RMS-QC. The Contractor shall complete the payment request worksheet and include it with the payment request. The work completed under the contract, measured as percent or as specific quantities, shall be updated at least monthly. After the update, the Contractor shall generate a payment request report using RMS-QC. The Contractor shall submit the payment requests with supporting data by E-mail with file attachment(s). If permitted by the Contracting Officer, a data diskette may be used instead of E-mail. A signed paper copy of the approved payment request is also required, which shall govern in the event of discrepancy with the electronic version.

1.6.3 Quality Control (QC)

RMS-QC provides a means to track implementation of the 3-phase QC Control System, prepare daily reports, identify and track deficiencies, document progress of work, and support other contractor QC requirements. The Contractor shall maintain this data on a daily basis. Entered data will automatically output to the RMS-QC generated daily report. The Contractor shall provide the Government a Contractor Quality Control (CQC) Plan within the time required in Section 01451, CONTRACTOR QUALITY CONTROL. Within seven calendar days of Government acceptance, the Contractor shall submit a data diskette or CD-ROM reflecting the information contained in the accepted CQC Plan: schedule, pay activities, features of work, submittal register, QC requirements, and equipment list.

1.6.3.1 Daily Contractor Quality Control (CQC) Reports

RMS-QC includes the means to produce the Daily CQC Report. The Contractor may use other formats to record basic QC data. However, the Daily CQC Report generated by RMS-QC shall be the Contractor's official report. Data from any supplemental reports by the Contractor shall be summarized and consolidated onto the RMS-QC-generated Daily CQC Report. Daily CQC Reports shall be submitted as required by Section 01451, CONTRACTOR QUALITY CONTROL. Reports shall be submitted electronically to the Government using E-mail or diskette within 24 hours after the date covered by the report. Use of either mode of submittal shall be coordinated with the government representative. The Contractor shall also provide the Government a signed, printed copy of the daily CQC report.

1.6.3.2 Deficiency Tracking

The Contractor shall use RMS-QC to track deficiencies. Deficiencies identified by the Contractor will be numerically tracked using QC Comments. The contractor shall maintain a current log of its QC comments in the RMS-QC database. The Government will log the deficiencies it has identified using its QA comments. The Government's QA comments will be included in its export file to the Contractor. The Contractor shall regularly update the correction status of both QC and QA comments.

1.6.3.3 Three-Phase Control Meetings

The Contractor shall maintain scheduled and actual dates and times of preparatory and initial control meetings in RMS-QC.

1.6.3.4 Accident/Safety Tracking

The Government will issue safety comments, directions, or guidance whenever safety deficiencies are observed. The Government's safety comments will be included in its export file to the Contractor. The Contractor shall regularly update the correction status of the safety comments. In addition, the Contractor shall utilize RMS-QC to advise the Government of any accidents occurring on the jobsite. This brief supplemental entry is not to be considered as a substitute for completion of mandatory reports, e.g., ENG Form 3394 and OSHA Form 200.

1.6.3.5 Features of Work

The Contractor shall include a complete list of the features of work in the RMS-QC database. A feature of work may be associated with multiple pay activities. However, each pay activity (see subparagraph "Pay Activity Data" of paragraph "Finances") will only be linked to a single feature of work.

1.6.3.6 QC Requirements

The Contractor shall develop and maintain a complete list of QC testing, transferred and installed property, and user training requirements in RMS-QC. The Contractor shall update all data on these QC requirements as work progresses, and shall promptly provide this information to the Government via RMS-QC.

1.6.4 Submittal Management

The Government will provide the initial submittal register, ENG Form 4288, SUBMITTAL REGISTER, in electronic format. Thereafter, the Contractor shall maintain a complete list of all submittals, including completion of all data columns as described in Section 01330, SUBMITTAL PROCEDURES. Dates on which submittals are received and returned by the Government will be included in its export file to the Contractor. The Contractor shall use RMS-QC to track and transmit all submittals. ENG Form 4025, submittal transmittal form, and the submittal register update, ENG Form 4288, shall be produced using RMS-QC. RMS will be used to update, store and exchange submittal registers and transmittals, but will not be used for storage of actual submittals.

1.6.5 Schedule

The Contractor shall develop a construction schedule consisting of pay activities, in accordance with Contract Clause "Schedules for Construction Contracts", or Section 01320, PROJECT SCHEDULE, as applicable. This schedule shall be input and maintained in the RMS-QC database either manually or by using the Standard Data Exchange Format (SDEF), see Section 01320 PROJECT SCHEDULE. The updated schedule data shall be included with each pay request submitted by the Contractor.

1.6.6 Import/Export of Data

RMS-QC includes the ability to export Contractor data to the Government and to import submittal register and other Government-provided data, and schedule data using SDEF.

1.7 IMPLEMENTATION

Contractor use of RMS-QC as described in the preceding paragraphs is mandatory. The Contractor shall ensure that sufficient resources are available to maintain its RMS-QC database, and to provide the Government with regular database updates. RMS-QC shall be an integral part of the Contractor's management of quality control.

1.8 DATA SUBMISSION VIA COMPUTER DISKETTE OR CD-ROM

The Government-preferred method for Contractor's submission of updates, payment requests, correspondence and other data is by E-mail with file attachment(s). For locations where this is not feasible, the Contracting Officer may permit use of computer diskettes or CD-ROM for data transfer. Data on the disks or CDs shall be exported using the RMS-QC built-in export function. If used, diskettes and CD-ROMs will be submitted in accordance with the following:

1.8.1 File Medium

The Contractor shall submit required data on 3-1/2" double-sided high-density diskettes formatted to hold 1.44 MB of data. Alternatively, CD-ROMs may be used. They shall conform to industry standards used in the United States. All data shall be provided in English.

1.8.2 Disk or CD-ROM Labels

The Contractor shall affix a permanent exterior label to each diskette and CD-ROM submitted. The label shall indicate in English, the RMS-QC file name, full contract number, project name, project location, data date, name and telephone number of person responsible for the data.

1.8.3 File Names

The Government will provide the file names to be used by the Contractor with the RMS-QC software.

1.9 MONTHLY COORDINATION MEETING

The Contractor shall update the RMS-QC database each workday. At least monthly, the Contractor shall generate and submit an export file to the Government with schedule update and progress payment request. As required in Contract Clause "Payments", at least one week prior to submittal, the contractor shall meet with the Government representative to review the planned progress payment data submission for errors and omissions. The contractor shall make all required corrections prior to Government acceptance of the export file and progress payment request. Payment requests accompanied by incomplete or incorrect data submittals will be returned. The Government will not process progress payments until an acceptable RMS-QC export file is received.

1.10 NOTIFICATION OF NONCOMPLIANCE

The Contracting Officer will notify the Contractor of any detected noncompliance with the requirements of this specification. The Contractor

shall take immediate corrective action after receipt of such notice. Such notice, when delivered to the Contractor at the work site, shall be deemed sufficient for the purpose of notification.

PART 2 PRODUCTS

Not used.

PART 3 EXECUTION

Not used.

-- End of Section --

SECTION 01330

SUBMITTAL PROCEDURES
09/01

PART 1 GENERAL

1.1 SUMMARY

1.1.1 Government-Furnished Information

Submittal register will be delivered to the contractor, by contracting officer. Register will have the following fields completed, to the extent that will be required by the Government during subsequent usage.

Column (c): Lists specification section in which submittal is required.

Column (d): Lists each submittal description (SD No. and type, e.g. SD-04 Drawings) required in each specification section.

Column (e): Lists one principal paragraph in specification section where a material or product is specified. This listing is only to facilitate locating submitted requirements. Do not consider entries in column (e) as limiting project requirements.

Column (f): Indicate approving authority for each submittal. A "G" indicates approval by contracting officer; a blank indicates approval by QC manager.

1.2 DEFINITIONS

1.2.1 Submittal

Shop drawings, product data, samples, and administrative submittals presented for review and approval. Contract Clauses "FAR 52.236-5, Material and Workmanship," paragraph (b) and "FAR 52.236-21, Specifications and Drawings for Construction," paragraphs (d), (e), and (f) apply to all "submittals."

1.2.2 Types of Submittals

All submittals are classified as indicated in paragraph "Submittal Descriptions (SD)". Submittals also are grouped as follows:

a. Shop drawings: As used in this section, drawings, schedules, diagrams, and other data prepared specifically for this contract, by contractor or through contractor by way of subcontractor, manufacturer, supplier, distributor, or other lower tier contractor, to illustrate portion of work.

b. Product data: Preprinted material such as illustrations, standard schedules, performance charts, instructions, brochures, diagrams, manufacturer's descriptive literature, catalog data, and other data to illustrate portion of work, but not prepared exclusively for this contract.

c. Samples: Physical examples of products, materials, equipment, assemblies, or workmanship that are physically identical to portion of work, illustrating portion of work or establishing standards for evaluating appearance of finished work or both.

d. Administrative submittals: Data presented for reviews and approval to ensure that administrative requirements of project are adequately met but not to ensure directly that work is in accordance with design concept and in compliance with contract documents.

1.3 SUBMITTAL IDENTIFICATION (SD)

Submittals required are identified by SD numbers and titles as follows:

SD-01 Preconstruction Submittals

Certificates of insurance.
Surety bonds.
List of proposed subcontractors.
List of proposed products.
Construction Progress Schedule.
Submittal schedule.
Schedule of values.
Health and safety plan.
Work plan.
Quality control plan.
Environmental protection plan.

SD-02 Shop Drawings

Drawings, diagrams and schedules specifically prepared to illustrate some portion of the work.

Diagrams and instructions from a manufacturer or fabricator for use in producing the product and as aids to the contractor for integrating the product or system into the project.

Drawings prepared by or for the contractor to show how multiple systems and interdisciplinary work will be coordinated.

SD-03 Product Data

Catalog cuts, illustrations, schedules, diagrams, performance charts, instructions and brochures illustrating size, physical appearance and other characteristics of materials or equipment for some portion of the work.

Samples of warranty language when the contract requires extended product warranties.

SD-04 Samples

Physical examples of materials, equipment or workmanship that illustrate functional and aesthetic characteristics of a material or product and establish standards by which the work can be judged.

Color samples from the manufacturer's standard line (or custom color

samples if specified) to be used in selecting or approving colors for the project.

Field samples and mock-ups constructed on the project site establish standards by which the ensuring work can be judged. Includes assemblies or portions of assemblies which are to be incorporated into the project and those which will be removed at conclusion of the work.

SD-05 Design Data

Calculations, mix designs, analyses or other data pertaining to a part of work.

SD-06 Test Reports

Report signed by authorized official of testing laboratory that a material, product or system identical to the material, product or system to be provided has been tested in accord with specified requirements. (Testing must have been within three years of date of contract award for the project.)

Report which includes findings of a test required to be performed by the contractor on an actual portion of the work or prototype prepared for the project before shipment to job site.

Report which includes finding of a test made at the job site or on sample taken from the job site, on portion of work during or after installation.

Investigation reports

Daily checklists

Final acceptance test and operational test procedure

SD-07 Certificates

Statements signed by responsible officials of manufacturer of product, system or material attesting that product, system or material meets specification requirements. Must be dated after award of project contract and clearly name the project.

Document required of Contractor, or of a supplier, installer or subcontractor through Contractor, the purpose of which is to further quality of orderly progression of a portion of the work by documenting procedures, acceptability of methods or personnel qualifications.

Confined space entry permits.

SD-08 Manufacturer's Instructions

Preprinted material describing installation of a product, system or material, including special notices and Material Safety Data sheets concerning impedances, hazards and safety precautions.

SD-09 Manufacturer's Field Reports

Documentation of the testing and verification actions taken by manufacturer's representative to confirm compliance with manufacturer's

standards or instructions.

Factory test reports.

SD-10 Operation and Maintenance Data

Data intended to be incorporated in operations and maintenance manuals.

SD-11 Closeout Submittals

Documentation to record compliance with technical or administrative requirements or to establish an administrative mechanism.

As-built drawings.

Special warranties.

Posted operating instructions.

Training plan.

1.3.1 Approving Authority

Person authorized to approve submittal.

1.3.2 Work

As used in this section, on- and off-site construction required by contract documents, including labor necessary to produce construction and materials, products, equipment, and systems incorporated or to be incorporated in such construction.

1.4 SUBMITTALS

Submit the following in accordance with the requirements of this section.

SD-01 Preconstruction Submittals

Submittal register; G

1.5 USE OF SUBMITTAL REGISTER

Prepare and maintain submittal register, as the work progresses. Do not change data which is output in columns (c), (d), (e), and (f) as delivered by government; retain data which is output in columns (a), (g), (h), and (i) as approved.

1.5.1 Submittal Register

Submit submittal register. Submit with quality control plan and project schedule required by Section 01450A, "Quality Control" and Section 01320A, "Project Schedule." Do not change data in columns (c), (d), (e), and (f) as delivered by the government. Verify that all submittals required for project are listed and add missing submittals. Complete the following on the register:

Column (a) Activity Number: Activity number from the project schedule.

Column (g) Contractor Submit Date: Scheduled date for approving

authority to receive submittals.

Column (h) Contractor Approval Date: Date contractor needs approval of submittal.

Column (i) Contractor Material: Date that contractor needs material delivered to contractor control.

1.5.2 Contractor Use of Submittal Register

Update the following fields.

Column (b) Transmittal Number: Contractor assigned list of consecutive numbers.

Column (j) Action Code (k): Date of action used to record contractor's review when forwarding submittals to QC.

Column (l) List date of submittal transmission.

Column (q) List date approval received.

1.5.3 Approving Authority Use of Submittal Register

Update the following fields.

Column (b).

Column (l) List date of submittal receipt.

Column (m) through (p).

Column (q) List date returned to contractor.

1.5.4 Contractor Action Code and Action Code

Entries used will be as follows (others may be prescribed by Transmittal Form):

NR - Not Received

AN - Approved as noted

A - Approved

RR - Disapproved, Revise, and Resubmit

1.5.5 Copies Delivered to the Government

Deliver one copy of submitted register updated by contractor to government with each invoice request.

1.6 PROCEDURES FOR SUBMITTALS

1.6.1 Reviewing, Certifying, Approving Authority

QC organization shall be responsible for reviewing and certifying that submittals are in compliance with contract requirements. Approving authority on submittals is QC manager unless otherwise specified for

specific submittal. At each "Submittal" paragraph in individual specification sections, a notation "G," following a submittal item, indicates contracting officer is approving authority for that submittal item.

1.6.2 Constraints

a. Submittals listed or specified in this contract shall conform to provisions of this section, unless explicitly stated otherwise.

b. Submittals shall be complete for each definable feature of work; components of definable feature interrelated as a system shall be submitted at same time.

c. When acceptability of a submittal is dependent on conditions, items, or materials included in separate subsequent submittals, submittal will be returned without review.

d. Approval of a separate material, product, or component does not imply approval of assembly in which item functions.

1.6.3 Scheduling

a. Coordinate scheduling, sequencing, preparing and processing of submittals with performance of work so that work will not be delayed by submittal processing. Allow for potential requirements to resubmit.

b. Except as specified otherwise, allow review period, beginning with receipt by approving authority, that includes at least 15 working days for submittals for QC manager approval and 20 working days for submittals for contracting officer approval. Period of review for submittals with contracting officer approval begins when Government receives submittal from QC organization. Period of review for each resubmittal is the same as for initial submittal.

c. For submittals requiring review by fire protection engineer, allow review period, beginning when government receives submittal from QC organization, of 30 working days for return of submittal to the contractor. Period of review for each resubmittal is the same as for initial submittal.

1.6.4 Variations

Variations from contract requirements require Government approval pursuant to contract Clause entitled "FAR 52.236-21, Specifications and Drawings for Construction" and will be considered where advantageous to government.

1.6.4.1 Considering Variations

Discussion with contracting officer prior to submission, will help ensure functional and quality requirements are met and minimize rejections and resubmittals. When contemplating a variation which results in lower cost, consider submission of the variation as a Value Engineering Change Proposal (VECP).

1.6.4.2 Proposing Variations

When proposing variation, deliver written request to the contracting officer, with documentation of the nature and features of the variation and why the variation is desirable and beneficial to government. If lower cost is a benefit, also include an estimate of the cost saving. In addition to documentation required for variation, include the submittals required for the item. Clearly mark the proposed variation in all documentation.

1.6.4.3 Warranting That Variations Are Compatible

When delivering a variation for approval, contractor warrants that this contract has been reviewed to establish that the variation, if incorporated, will be compatible with other elements of work.

1.6.4.4 Review Schedule Is Modified

In addition to normal submittal review period, a period of 10 working days will be allowed for consideration by the Government of submittals with variations.

1.6.5 Contractor's Responsibilities

a. Determine and verify field measurements, materials, field construction criteria; review each submittal; and check and coordinate each submittal with requirements of the work and contract documents.

b. Transmit submittals to QC organization in accordance with schedule on approved Submittal Register, and to prevent delays in the work, delays to government, or delays to separate contractors.

c. Advise contracting officer of variation, as required by paragraph entitled "Variations."

d. Correct and resubmit submittal as directed by approving authority. When resubmitting disapproved transmittals or transmittals noted for resubmittal, the contractor shall provide copy of that previously submitted transmittal including all reviewer comments for use by approving authority. Direct specific attention in writing or on resubmitted submittal, to revisions not requested by approving authority on previous submissions.

e. Furnish additional copies of submittal when requested by contracting officer, to a limit of 20 copies per submittal.

f. Complete work which must be accomplished as basis of a submittal in time to allow submittal to occur as scheduled.

g. Ensure no work has begun until submittals for that work have been returned as "approved," or "approved as noted", except to the extent that a portion of work must be accomplished as basis of submittal.

1.6.6 QC Organization Responsibilities

a. Note date on which submittal was received from contractor on each submittal.

b. Review each submittal; and check and coordinate each submittal with requirements of work and contract documents.

c. Review submittals for conformance with project design concepts and compliance with contract documents.

d. Act on submittals, determining appropriate action based on QC organization's review of submittal.

(1) When QC manager is approving authority, take appropriate action on submittal from the possible actions defined in paragraph entitled, "Actions Possible."

(2) When contracting officer is approving authority or when variation has been proposed, forward submittal to Government with certifying statement or return submittal marked "not reviewed" or "revise and resubmit" as appropriate. The QC organization's review of submittal determines appropriate action.

e. Ensure that material is clearly legible.

f. Stamp each sheet of each submittal with QC certifying statement or approving statement, except that data submitted in bound volume or on one sheet printed on two sides may be stamped on the front of the first sheet only.

(1) When approving authority is contracting officer, QC organization will certify submittals forwarded to contracting officer with the following certifying statement:

"I hereby certify that the (equipment) (material) (article) shown and marked in this submittal is that proposed to be incorporated with contract Number Corps of Engineer to provide, is in compliance with the contract drawings and specification, can be installed in the allocated spaces, and is submitted for Government approval.

Certified by Submittal Reviewer _____, Date _____
(Signature when applicable)

Certified by QC manager _____, Date _____"
(Signature)

(2) When approving authority is QC manager, QC manager will use the following approval statement when returning submittals to contractor as "Approved" or "Approved as Noted."

"I hereby certify that the (material) (equipment) (article) shown and marked in this submittal and proposed to be incorporated with contract Number Corps of Engineer to provide, is in compliance with the contract drawings and specification, can be installed in the allocated spaces, and is _____ approved for use.

Certified by Submittal Reviewer _____, Date _____
(Signature when applicable)

Approved by QC manager _____, Date _____"
(Signature)

g. Sign certifying statement or approval statement. The person signing certifying statements shall be QC organization member designated in the approved QC plan. The signatures shall be in

original ink. Stamped signatures are not acceptable.

h. Update submittal register as submittal actions occur and maintain the submittal register at project site until final acceptance of all work by contracting officer.

i. Retain a copy of approved submittals at project site, including contractor's copy of approved samples.

1.6.7 Government's Responsibilities

When approving authority is contracting Officer, the Government will:

a. Note date on which submittal was received from QC manager, on each submittal for which the contracting officer is approving authority.

b. Review submittals for approval within scheduling period specified and only for conformance with project design concepts and compliance with contract documents.

c. Identify returned submittals with one of the actions defined in paragraph entitled "Actions Possible" and with markings appropriate for action indicated.

1.6.8 Actions Possible

Submittals will be returned with one of the following notations:

a. Submittals marked "not reviewed" will indicate submittal has been previously reviewed and approved, is not required , does not have evidence of being reviewed and approved by contractor, or is not complete. A submittal marked "not reviewed" will be returned with an explanation of the reason it is not reviewed. Resubmit submittals returned for lack of review by contractor or for being incomplete, with appropriate action, coordination, or change.

b. Submittals marked "approved" "approved as submitted" authorize contractor to proceed with work covered.

c. Submittals marked "approved as noted" or "approval except as noted; resubmission not required" authorize contractor to proceed with work as noted provided contractor takes no exception to the notations.

d. Submittals marked "revise and resubmit" or "disapproved" indicate submittal is incomplete or does not comply with design concept or requirements of the contract documents and shall be resubmitted with appropriate changes. No work shall proceed for this item until resubmittal is approved.

1.7 FORMAT OF SUBMITTALS

1.7.1 Transmittal Form

Transmit each submittal, except sample installations and sample panels, to office of approving authority. Transmit submittals with transmittal form prescribed by contracting officer and standard for project. The transmittal form shall identify contractor, indicate date of submittal, and include information prescribed by transmittal form and required in

paragraph entitled "Identifying Submittals." Process transmittal forms to record actions regarding sample panels and sample installations.

1.7.2 Identifying Submittals

Identify submittals, except sample panel and sample installation, with the following information permanently adhered to or noted on each separate component of each submittal and noted on transmittal form. Mark each copy of each submittal identically, with the following:

a. Project title and location.

b. Construction contract number.

c. Section number of the specification section by which submittal is required.

d. Submittal description (SD) number of each component of submittal.

e. When a resubmission, add alphabetic suffix on submittal description, for example, SD-10A, to indicate resubmission.

f. Name, address, and telephone number of subcontractor, supplier, manufacturer and any other second tier contractor associated with submittal.

g. Product identification and location in project.

1.7.3 Format for Product Data

a. Present product data submittals for each section as a complete, bound volume. Include table of contents, listing page and catalog item numbers for product data.

b. Indicate, by prominent notation, each product which is being submitted; indicate specification section number and paragraph number to which it pertains.

c. Supplement product data with material prepared for project to satisfy submittal requirements for which product data does not exist. Identify this material as developed specifically for project.

1.7.4 Format for Shop Drawings

a. Shop drawings shall not be less than 8 1/2 by 11 inches nor more than 30 by 42 inches.

b. Present 8 1/2 by 11 inches sized shop drawings as part of the bound volume for submittals required by section. Present larger drawings in sets.

c. Include on each drawing the drawing title, number, date, and revision numbers and dates, in addition to information required in paragraph entitled "Identifying Submittals."

d. Dimension drawings, except diagrams and schematic drawings; prepare drawings demonstrating interface with other trades to scale. Shop drawing dimensions shall be the same unit of measure

as indicated on the contract drawings. Identify materials and products for work shown.

1.7.5 Format of Samples

a. Furnish samples in sizes below, unless otherwise specified or unless the manufacturer has prepackaged samples of approximately same size as specified:

(1) Sample of Equipment or Device: Full size.

(2) Sample of Materials Less Than 2 by 3 inches: Built up to 8 1/2 by 11 inches.

(3) Sample of Materials Exceeding 8 1/2 by 11 inches: Cut down to 8 1/2 by 11 inches and adequate to indicate color, texture, and material variations.

(4) Sample of Linear Devices or Materials: 10 inch length or length to be supplied, if less than 10 inches. Examples of linear devices or materials are conduit and handrails.

(5) Sample of Non-Solid Materials: Pint. Examples of non-solid materials are sand and paint.

(6) Color Selection Samples: 2 by 4 inches.

(7) Sample Panel: 4 by 4 feet.

(8) Sample Installation: 100 square feet.

b. Samples Showing Range of Variation: Where variations are unavoidable due to nature of the materials, submit sets of samples of not less than three units showing extremes and middle of range.

c. Reusable Samples: Incorporate returned samples into work only if so specified or indicated. Incorporated samples shall be in undamaged condition at time of use.

d. Recording of Sample Installation: Note and preserve the notation of area constituting sample installation but remove notation at final clean up of project.

e. When color, texture or pattern is specified by naming a particular manufacturer and style, include one sample of that manufacturer and style, for comparison.

1.7.6 Format of Administrative Submittals

a. When submittal includes a document which is to be used in project or become part of project record, other than as a submittal, do not apply contractor's approval stamp to document, but to a separate sheet accompanying document.

b. Operation and Maintenance Manual Data: Submit in accordance with Section 01781N, "Operation and Maintenance Data." Include components required in that section and the various technical sections.

1.8 QUANTITY OF SUBMITTALS

1.8.1 Number of Copies of Product Data

a. Submit six copies of submittals of product data requiring review and approval only by QC organization and seven copies of product data requiring review and approval by contracting officer. Submit three copies of submittals of product data for operation and maintenance manuals.

1.8.2 Number of Copies of Shop Drawings

Submit shop drawings in compliance with quantity requirements specified for product data.

1.8.3 Number of Samples

a. Submit two samples, or two sets of samples showing range of variation, of each required item. One approved sample or set of samples will be retained by approving authority and one will be returned to contractor.

b. Submit one sample panel. Include components listed in technical section or as directed.

c. Submit one sample installation, where directed.

d. Submit one sample of non-solid materials.

1.8.4 Number of Copies of Administrative Submittals

a. Unless otherwise specified, submit administrative submittals compliance with quantity requirements specified for product data.

b. Submit administrative submittals required under "SD-10 Operation and Maintenance Data" to conform to Section 01781N, "Operation and Maintenance Data."

1.9 FORWARDING SUBMITTALS

1.9.1 Samples Required of the Contractor

Submit samples to Corps of Engineers.

1.9.2 Shop Drawings, Product Data, and O&M Data

As soon as practicable after award of contract, and before procurement of fabrication, submit, except as specified otherwise, to the Corps of Engineers, the shop drawings, product data and O&M Data required in the technical sections of this specification. Corps of Engineers will review and provide surveillance for the Contracting Officer to determine if Contractor-approved submittals comply with the contract requirements, and will review and approve for the Contracting Officer those submittals not permitted to be Contractor approved to determine if submittals comply with the contract requirements. One copy of the transmittal form for submittals shall be forwarded to the Resident Officer in Charge of Construction

1.10 SUBMITTAL CLASSIFICATION

Submittals are classified as follows:

1.10.1 Government Approved

Government approval is required for extensions of design, critical materials, deviations, equipment whose compatibility with the entire system must be checked, and other items as designated by the Contracting Officer. Within the terms of the Contract Clause entitled "Specifications and Drawings for Construction," they are considered to be "shop drawings."

1.10.2 Information Only

All submittals not requiring Government approval will be for information only. They are not considered to be "shop drawings" within the terms of the Contract Clause referred to above.

1.11 APPROVED SUBMITTALS

The Contracting Officer's approval of submittals shall not be construed as a complete check, but will indicate only that the general method of construction, materials, detailing and other information are satisfactory. Approval will not relieve the Contractor of the responsibility for any error which may exist, as the Contractor under the Contractor Quality Control (CQC) requirements of this contract is responsible for dimensions, the design of adequate connections and details, and the satisfactory construction of all work. After submittals have been approved by the Contracting Officer, no resubmittal for the purpose of substituting materials or equipment will be considered unless accompanied by an explanation of why a substitution is necessary.

1.12 DISAPPROVED SUBMITTALS

The Contractor shall make all corrections required by the Contracting Officer and promptly furnish a corrected submittal in the form and number of copies specified for the initial submittal. If the Contractor considers any correction indicated on the submittals to constitute a change to the contract, a notice in accordance with the Contract Clause "Changes" shall be given promptly to the Contracting Officer.

1.13 WITHHOLDING OF PAYMENT

Payment for materials incorporated in the work will not be made if required approvals have not been obtained.

1.14 GENERAL

The Contractor shall make submittals as required by the specifications. The Contracting Officer may request submittals in addition to those specified when deemed necessary to adequately describe the work covered in the respective sections. Units of weights and measures used on all submittals shall be the same as those used in the contract drawings. Each submittal shall be complete and in sufficient detail to allow ready determination of compliance with contract requirements. Prior to submittal, all items shall be checked and approved by the Contractor's Quality Control (CQC) System Manager and each item shall be stamped, signed, and dated by the CQC System Manager indicating action taken. Proposed deviations from the contract requirements shall be clearly identified. Submittals shall include items such as: Contractor's, manufacturer's, or fabricator's drawings; descriptive literature including

(but not limited to) catalog cuts, diagrams, operating charts or curves; test reports; test cylinders; samples; O&M manuals (including parts list); certifications; warranties; and other such required submittals. Submittals requiring Government approval shall be scheduled and made prior to the acquisition of the material or equipment covered thereby. Samples remaining upon completion of the work shall be picked up and disposed of in accordance with manufacturer's Material Safety Data Sheets (MSDS) and in compliance with existing laws and regulations.

1.15 SUBMITTAL REGISTER

At the end of this section is a submittal register showing items of equipment and materials for which submittals are required by the specifications; this list may not be all inclusive and additional submittals may be required. The Contractor shall maintain a submittal register for the project in accordance with Section 01312A QUALITY CONTROL SYSTEM (QCS).

1.16 SCHEDULING

Submittals covering component items forming a system or items that are interrelated shall be scheduled to be coordinated and submitted concurrently. Certifications to be submitted with the pertinent drawings shall be so scheduled. Adequate time (a minimum of 15 calendar days exclusive of mailing time) shall be allowed and shown on the register for review and approval. No delay damages or time extensions will be allowed for time lost in late submittals. An additional 15 calendar days shall be allowed and shown on the register for review and approval of submittals for HVAC control systems.

1.17 TRANSMITTAL FORM (ENG FORM 4025)

The sample transmittal form (ENG Form 4025) attached to this section shall be used for submitting both Government approved and information only submittals in accordance with the instructions on the reverse side of the form. These forms will be furnished to the Contractor. This form shall be properly completed by filling out all the heading blank spaces and identifying each item submitted. Special care shall be exercised to ensure proper listing of the specification paragraph and/or sheet number of the contract drawings pertinent to the data submitted for each item.

1.18 SUBMITTAL PROCEDURES

Submittals shall be made as follows:

1.18.1 Deviations

For submittals which include proposed deviations requested by the Contractor, the column "variation" of ENG Form 4025 shall be checked. The Contractor shall set forth in writing the reason for any deviations and annotate such deviations on the submittal. The Government reserves the right to rescind inadvertent approval of submittals containing unnoted deviations.

1.19 CONTROL OF SUBMITTALS

The Contractor shall carefully control his procurement operations to ensure that each individual submittal is made on or before the Contractor scheduled submittal date shown on the approved "Submittal Register."

1.20 GOVERNMENT APPROVED SUBMITTALS

Upon completion of review of submittals requiring Government approval, the submittals will be identified as having received approval by being so stamped and dated. Two (2) copies of the submittal will be retained by the Contracting Officer and four (4) copies of the submittal will be returned to the Contractor.

1.21 INFORMATION ONLY SUBMITTALS

Normally submittals for information only will not be returned. Approval of the Contracting Officer is not required on information only submittals. The Government reserves the right to require the Contractor to resubmit any item found not to comply with the contract. This does not relieve the Contractor from the obligation to furnish material conforming to the plans and specifications; will not prevent the Contracting Officer from requiring removal and replacement of nonconforming material incorporated in the work; and does not relieve the Contractor of the requirement to furnish samples for testing by the Government laboratory or for check testing by the Government in those instances where the technical specifications so prescribe.

1.22 STAMPS

Stamps used by the Contractor on the submittal data to certify that the submittal meets contract requirements shall be similar to the following:

CONTRACTOR

(Firm Name)

_____ Approved

_____ Approved with corrections as noted on submittal data and/or attached sheets(s).

SIGNATURE: _____

TITLE: _____

DATE: _____

PART 2 PRODUCTS

Not used.

PART 3 EXECUTION

Not used.

-- End of Section --

SECTION 01356A

STORM WATER POLLUTION PREVENTION MEASURES
08/96

PART 1 GENERAL

1.1 REFERENCES

The publications listed below form a part of this specification to the extent referenced. The publications are referred to in the text by basic designation only.

AMERICAN SOCIETY FOR TESTING AND MATERIALS (ASTM)

ASTM D 4439	(1997) Standard Terminology for Geosynthetics
ASTM D 4491	(1996) Water Permeability of Geotextiles by Permittivity
ASTM D 4533	(1991; R 1996) Trapezoid Tearing Strength of Geotextiles
ASTM D 4632	(1991; R 1996)) Grab Breaking Load and Elongation of Geotextiles
ASTM D 4751	(1995) Determining Apparent Opening Size of a Geotextile
ASTM D 4873	(1995) Identification, Storage, and Handling of Geosynthetic Rolls

1.2 GENERAL

The Contractor shall implement the storm water pollution prevention measures specified in this section in a manner which will meet the requirements of Section 01354 ENVIRONMENTAL PROTECTION, and the requirements of the National Pollution Discharge Elimination System (NPDES) permit attached to that Section.

1.3 SUBMITTALS

Government approval is required for submittals with a "G" designation; submittals not having a "G" designation are for information only. When used, a designation following the "G" designation identifies the office that will review the submittal for the Government. The following shall be submitted in accordance with Section 01330 SUBMITTAL PROCEDURES:

SD-07 Certificates

Mill Certificate or Affidavit

Certificate attesting that the Contractor has met all specified requirements.

1.4 EROSION AND SEDIMENT CONTROLS

The controls and measures required by the Contractor are described below.

1.4.1 Stabilization Practices

The stabilization practices to be implemented shall include temporary seeding, mulching, protection of trees, preservation of mature vegetation, etc. On his daily CQC Report, the Contractor shall record the dates when the major grading activities occur, (e.g., clearing and grubbing, excavation, and grading); when construction activities temporarily or permanently cease on a portion of the site; and when stabilization practices are initiated. Except as provided in paragraphs UNSUITABLE CONDITIONS and NO ACTIVITY FOR LESS THAN 21 DAYS, stabilization practices shall be initiated as soon as practicable, but no more than 14 days, in any portion of the site where construction activities have temporarily or permanently ceased.

1.4.1.1 Unsuitable Conditions

Where the initiation of stabilization measures by the fourteenth day after construction activity temporarily or permanently ceases is precluded by unsuitable conditions caused by the weather, stabilization practices shall be initiated as soon as practicable after conditions become suitable.

1.4.1.2 No Activity for Less Than 21 Days

Where construction activity will resume on a portion of the site within 21 days from when activities ceased (e.g., the total time period that construction activity is temporarily ceased is less than 21 days), then stabilization practices do not have to be initiated on that portion of the site by the fourteenth day after construction activity temporarily ceased.

1.4.2 Structural Practices

Structural practices shall be implemented to divert flows from exposed soils, temporarily store flows, or otherwise limit runoff and the discharge of pollutants from exposed areas of the site. Structural practices shall be implemented in a timely manner during the construction process to minimize erosion and sediment runoff. Structural practices shall include the following devices.

1.4.2.1 Silt Fences

The Contractor shall provide silt fences as a temporary structural practice to minimize erosion and sediment runoff. Silt fences shall be properly installed to effectively retain sediment immediately after completing each phase of work where erosion would occur in the form of sheet and rill erosion (e.g. clearing and grubbing, excavation, embankment, and grading). Silt fences shall be installed in the locations indicated on the drawings. Final removal of silt fence barriers shall be upon approval by the Contracting Officer.

PART 2 PRODUCTS

2.1 COMPONENTS FOR SILT FENCES

2.1.1 Filter Fabric

The geotextile shall comply with the requirements of ASTM D 4439, and

shall consist of polymeric filaments which are formed into a stable network such that filaments retain their relative positions. The filament shall consist of a long-chain synthetic polymer composed of at least 85 percent by weight of ester, propylene, or amide, and shall contain stabilizers and/or inhibitors added to the base plastic to make the filaments resistance to deterioration due to ultraviolet and heat exposure. Synthetic filter fabric shall contain ultraviolet ray inhibitors and stabilizers to provide a minimum of six months of expected usable construction life at a temperature range of 0 to 120 degrees F. The filter fabric shall meet the following requirements:

FILTER FABRIC FOR SILT SCREEN FENCE

PHYSICAL PROPERTY	TEST PROCEDURE	STRENGTH REQUIREMENT
Grab Tensile	ASTM D 4632	100 lbs. min.
Elongation (%)		30 % max.
Trapezoid Tear	ASTM D 4533	55 lbs. min.
Permittivity	ASTM D 4491	0.2 sec-1
AOS (U.S. Std Sieve)	ASTM D 4751	20-100

2.1.2 Silt Fence Stakes and Posts

The Contractor may use either wooden stakes or steel posts for fence construction. Wooden stakes utilized for silt fence construction, shall have a minimum cross section of 2 inches by 2 inches when oak is used and 4 inches by 4 inches when pine is used, and shall have a minimum length of 5 feet. Steel posts (standard "U" or "T" section) utilized for silt fence construction, shall have a minimum weight of 1.33 pounds per linear foot and a minimum length of 5 feet.

2.1.3 Mill Certificate or Affidavit

A mill certificate or affidavit shall be provided attesting that the fabric and factory seams meet chemical, physical, and manufacturing requirements specified above. The mill certificate or affidavit shall specify the actual Minimum Average Roll Values and shall identify the fabric supplied by roll identification numbers. The Contractor shall submit a mill certificate or affidavit signed by a legally authorized official from the company manufacturing the filter fabric.

2.1.4 Identification Storage and Handling

Filter fabric shall be identified, stored and handled in accordance with ASTM D 4873.

PART 3 EXECUTION

3.1 INSTALLATION OF SILT FENCES

Silt fences shall extend a minimum of 16 inches above the ground surface and shall not exceed 34 inches above the ground surface. Filter fabric shall be from a continuous roll cut to the length of the barrier to avoid the use of joints. When joints are unavoidable, filter fabric shall be spliced together at a support post, with a minimum 6 inch overlap, and securely sealed. A trench shall be excavated approximately 4 inches wide

and 4 inches deep on the upslope side of the location of the silt fence. The 4-inch by 4-inch trench shall be backfilled and the soil compacted over the filter fabric. Silt fences shall be removed upon approval by the Contracting Officer.

3.2 MAINTENANCE

The Contractor shall maintain the temporary and permanent vegetation, erosion and sediment control measures, and other protective measures in good and effective operating condition by performing routine inspections to determine condition and effectiveness, by restoration of destroyed vegetative cover, and by repair of erosion and sediment control measures and other protective measures. The following procedures shall be followed to maintain the protective measures.

3.2.1 Silt Fence Maintenance

Silt fences shall be inspected in accordance with paragraph INSPECTIONS. Any required repairs shall be made promptly. Close attention shall be paid to the repair of damaged silt fence resulting from end runs and undercutting. Should the fabric on a silt fence decompose or become ineffective, and the barrier is still necessary, the fabric shall be replaced promptly. Sediment deposits shall be removed when deposits reach one-third of the height of the barrier. When a silt fence is no longer required, it shall be removed. The immediate area occupied by the fence and any sediment deposits shall be shaped to an acceptable grade.

3.3 INSPECTIONS

3.3.1 General

The Contractor shall inspect disturbed areas of the construction site, areas used for storage of materials that are exposed to precipitation that have not been finally stabilized, stabilization practices, structural practices, other controls, and area where vehicles exit the site at least once every seven (7) calendar days and within 24 hours of the end of any storm that produces 0.5 inches or more rainfall at the site. Where sites have been finally stabilized, such inspection shall be conducted at least once every month.

3.3.2 Inspections Details

Disturbed areas and areas used for material storage that are exposed to precipitation shall be inspected for evidence of, or the potential for, pollutants entering the drainage system. Erosion and sediment control measures identified in the Storm Water Pollution Prevention Plan shall be observed to ensure that they are operating correctly. Discharge locations or points shall be inspected to ascertain whether erosion control measures are effective in preventing significant impacts to receiving waters. Locations where vehicles exit the site shall be inspected for evidence of offsite sediment tracking.

3.3.3 Inspection Reports

For each inspection conducted, the Contractor shall prepare a report summarizing the scope of the inspection, name(s) and qualifications of personnel making the inspection, the date(s) of the inspection, major observations relating to the implementation of the Storm Water Pollution Prevention Plan, maintenance performed, and actions taken. The report

shall be furnished to the Contracting Officer within 24 hours of the inspection as a part of the Contractor's daily CQC REPORT. A copy of the inspection report shall be maintained on the job site.

-- End of Section --

SECTION 01451A

CONTRACTOR QUALITY CONTROL
07/01

PART 1 GENERAL

1.1 REFERENCES

The publications listed below form a part of this specification to the extent referenced. The publications are referred to in the text by basic designation only.

AMERICAN SOCIETY FOR TESTING AND MATERIALS (ASTM)

ASTM D 3740	(2001) Minimum Requirements for Agencies Engaged in the Testing and/or Inspection of Soil and Rock as Used in Engineering Design and Construction
ASTM E 329	(2000b) Agencies Engaged in the Testing and/or Inspection of Materials Used in Construction

1.2 PAYMENT

Separate payment will not be made for providing and maintaining an effective Quality Control program, and all costs associated therewith shall be included in the applicable unit prices or lump-sum prices contained in the Bidding Schedule.

PART 2 PRODUCTS (Not Applicable)

PART 3 EXECUTION

3.1 GENERAL REQUIREMENTS

The Contractor is responsible for quality control and shall establish and maintain an effective quality control system in compliance with the Contract Clause titled "Inspection of Construction." The quality control system shall consist of plans, procedures, and organization necessary to produce an end product which complies with the contract requirements. The system shall cover all construction operations, both onsite and offsite, and shall be keyed to the proposed construction sequence. The site project superintendent will be held responsible for the quality of work on the job and is subject to removal by the Contracting Officer for non-compliance with the quality requirements specified in the contract. The site project superintendent in this context shall be the highest level manager responsible for the overall construction activities at the site, including quality and production. The site project superintendent shall maintain a physical presence at the site at all times, except as otherwise acceptable to the Contracting Officer, and shall be responsible for all construction and construction related activities at the site.

3.2 QUALITY CONTROL PLAN

The Contractor shall furnish for review by the Government, not later than 15 days after receipt of notice to proceed, the Contractor Quality Control (CQC) Plan proposed to implement the requirements of the Contract Clause titled "Inspection of Construction." The plan shall identify personnel, procedures, control, instructions, tests, records, and forms to be used. The Government will consider an interim plan for the first 90 days of operation. Construction will be permitted to begin only after acceptance of the CQC Plan or acceptance of an interim plan applicable to the particular feature of work to be started. Work outside of the features of work included in an accepted interim plan will not be permitted to begin until acceptance of a CQC Plan or another interim plan containing the additional features of work to be started.

3.2.1 Content of the CQC Plan

The CQC Plan shall include, as a minimum, the following to cover all construction operations, both onsite and offsite, including work by subcontractors, fabricators, suppliers, and purchasing agents:

a. A description of the quality control organization, including a chart showing lines of authority and acknowledgment that the CQC staff shall implement the three phase control system for all aspects of the work specified. The staff shall include a CQC System Manager who shall report to the project superintendent.

b. The name, qualifications (in resume format), duties, responsibilities, and authorities of each person assigned a CQC function.

c. A copy of the letter to the CQC System Manager signed by an authorized official of the firm which describes the responsibilities and delegates sufficient authorities to adequately perform the functions of the CQC System Manager, including authority to stop work which is not in compliance with the contract. The CQC System Manager shall issue letters of direction to all other various quality control representatives outlining duties, authorities, and responsibilities. Copies of these letters shall also be furnished to the Government.

d. Procedures for scheduling, reviewing, certifying, and managing submittals, including those of subcontractors, offsite fabricators, suppliers, and purchasing agents. These procedures shall be in accordance with Section 01330 SUBMITTAL PROCEDURES.

e. Control, verification, and acceptance testing procedures for each specific test to include the test name, specification paragraph requiring test, feature of work to be tested, test frequency, and person responsible for each test. (Laboratory facilities will be approved by the Contracting Officer.)

f. Procedures for tracking preparatory, initial, and follow-up control phases and control, verification, and acceptance tests including documentation.

g. Procedures for tracking construction deficiencies from identification through acceptable corrective action. These procedures shall establish verification that identified deficiencies have been corrected.

h. Reporting procedures, including proposed reporting formats.

i. A list of the definable features of work. A definable feature of work is a task which is separate and distinct from other tasks, has separate control requirements, and may be identified by different trades or disciplines, or it may be work by the same trade in a different environment. Although each section of the specifications may generally be considered as a definable feature of work, there are frequently more than one definable features under a particular section. This list will be agreed upon during the coordination meeting.

3.2.2 Acceptance of Plan

Acceptance of the Contractor's plan is required prior to the start of construction. Acceptance is conditional and will be predicated on satisfactory performance during the construction. The Government reserves the right to require the Contractor to make changes in his CQC Plan and operations including removal of personnel, as necessary, to obtain the quality specified.

3.2.3 Notification of Changes

After acceptance of the CQC Plan, the Contractor shall notify the Contracting Officer in writing of any proposed change. Proposed changes are subject to acceptance by the Contracting Officer.

3.3 COORDINATION MEETING

After the Preconstruction Conference, before start of construction, and prior to acceptance by the Government of the CQC Plan, the Contractor shall meet with the Contracting Officer or Authorized Representative and discuss the Contractor's quality control system. The CQC Plan shall be submitted for review a minimum of 5 calendar days prior to the Coordination Meeting. During the meeting, a mutual understanding of the system details shall be developed, including the forms for recording the CQC operations, control activities, testing, administration of the system for both onsite and offsite work, and the interrelationship of Contractor's Management and control with the Government's Quality Assurance. Minutes of the meeting shall be prepared by the Government and signed by both the Contractor and the Contracting Officer. The minutes shall become a part of the contract file. There may be occasions when subsequent conferences will be called by either party to reconfirm mutual understandings and/or address deficiencies in the CQC system or procedures which may require corrective action by the Contractor.

3.4 QUALITY CONTROL ORGANIZATION

3.4.1 Personnel Requirements

The requirements for the CQC organization are a CQC System Manager and sufficient number of additional qualified personnel to ensure safety and contract compliance. The Safety and Health Manager shall receive direction and authority from the CQC System Manager and shall serve as a member of the CQC staff. Personnel identified in the technical provisions as requiring specialized skills to assure the required work is being performed properly will also be included as part of the CQC organization.The Contractor's CQC staff shall maintain a presence at the site at all times during progress of the work and have complete authority and responsibility

to take any action necessary to ensure contract compliance. The CQC staff shall be subject to acceptance by the Contracting Officer. The Contractor shall provide adequate office space, filing systems and other resources as necessary to maintain an effective and fully functional CQC organization. Complete records of all letters, material submittals, show drawing submittals, schedules and all other project documentation shall be promptly furnished to the CQC organization by the Contractor. The CQC organization shall be responsible to maintain these documents and records at the site at all times, except as otherwise acceptable to the Contracting Officer.

3.4.2 CQC System Manager

The Contractor shall identify as CQC System Manager an individual within the onsite work organization who shall be responsible for overall management of CQC and have the authority to act in all CQC matters for the Contractor. The CQC System Manager shall be a construction person with a minimum of 10 years in related work. This CQC System Manager shall be on the site at all times during construction and shall be employed by the prime Contractor. The CQC System Manager shall be assigned as System Manager but may have duties as project superintendent in addition to quality control. An alternate for the CQC System Manager shall be identified in the plan to serve in the event of the System Manager's absence. The requirements for the alternate shall be the same as for the designated CQC System Manager.

3.4.3 CQC Personnel

In addition to CQC personnel specified elsewhere in the contract, the Contractor shall provide as part of the CQC organization specialized personnel to assist the CQC System Manager for the following areas: electrical, mechanical, civil, structural, and environmental. These individuals shall be directly employed by the prime Contractor and may not be employed by a supplier or sub-contractor on this project; be responsible to the CQC System Manager; be physically present at the construction site during work on their areas of responsibility; have the necessary education and/or experience in accordance with the experience matrix listed herein. These individuals may perform other duties but must be allowed sufficient time to perform their assigned quality control duties as described in the Quality Control Plan.

Experience Matrix

	Area	Qualifications
a.	Civil	Graduate Civil Engineer with 2 years experience in the type of work being performed on this project or technician with 5 yrs related experience
b.	Mechanical	Graduate Mechanical Engineer with 2 yrs experience or person with 5 yrs related experience
c.	Electrical	Graduate Electrical Engineer with 2 yrs related experience or

Experience Matrix

	Area	Qualifications
		person with 5 yrs related experience
d.	Structural	Graduate Structural Engineer with 2 yrs experience or person with 5 yrs related experience
e.	Environmental	Graduate Environmental Engineer with 3 yrs experience

3.4.4 Additional Requirement

In addition to the above experience and/or education requirements the CQC System Manager shall have completed the course entitled "Construction Quality Management For Contractors".

3.4.5 Organizational Changes

The Contractor shall maintain the CQC staff at full strength at all times. When it is necessary to make changes to the CQC staff, the Contractor shall revise the CQC Plan to reflect the changes and submit the changes to the Contracting Officer for acceptance.

3.5 SUBMITTALS AND DELIVERABLES

Submittals, if needed, shall be made as specified in Section 01330 SUBMITTAL PROCEDURES. The CQC organization shall be responsible for certifying that all submittals and deliverables are in compliance with the contract requirements. When Section 15950A HEATING, VENTILATING AND AIR CONDITIONING (HVAC) CONTROL SYSTEMS; 15951A DIRECT DIGITAL CONTROL FOR HVAC; 15990A TESTING, ADJUSTING, AND BALANCING OF HVAC SYSTEMS; or 15995A COMMISSIONING OF HVAC SYSTEMS are included in the contract, the submittals required by those sections shall be coordinated with Section 01330 SUBMITTAL PROCEDURES to ensure adequate time is allowed for each type of submittal required.

3.6 CONTROL

Contractor Quality Control is the means by which the Contractor ensures that the construction, to include that of subcontractors and suppliers, complies with the requirements of the contract. At least three phases of control shall be conducted by the CQC System Manager for each definable feature of work as follows:

3.6.1 Preparatory Phase

This phase shall be performed prior to beginning work on each definable feature of work, after all required plans/documents/materials are approved/accepted, and after copies are at the work site. This phase shall include:

a. A review of each paragraph of applicable specifications, reference codes, and standards. A copy of those sections of referenced codes and standards applicable to that portion of the work to be accomplished in the field shall be made available by the Contractor at the preparatory inspection. These copies shall be maintained in the field and available for use by Government personnel until final acceptance of the work.

b. A review of the contract drawings.

c. A check to assure that all materials and/or equipment have been tested, submitted, and approved.

d. Review of provisions that have been made to provide required control inspection and testing.

e. Examination of the work area to assure that all required preliminary work has been completed and is in compliance with the contract.

f. A physical examination of required materials, equipment, and sample work to assure that they are on hand, conform to approved shop drawings or submitted data, and are properly stored.

g. A review of the appropriate activity hazard analysis to assure safety requirements are met.

h. Discussion of procedures for controlling quality of the work including repetitive deficiencies. Document construction tolerances and workmanship standards for that feature of work.

i. A check to ensure that the portion of the plan for the work to be performed has been accepted by the Contracting Officer.

j. Discussion of the initial control phase.

k. The Government shall be notified at least 48 hours in advance of beginning the preparatory control phase. This phase shall include a meeting conducted by the CQC System Manager and attended by the superintendent, other CQC personnel (as applicable), and the foreman responsible for the definable feature. The results of the preparatory phase actions shall be documented by separate minutes prepared by the CQC System Manager and attached to the daily CQC report. The Contractor shall instruct applicable workers as to the acceptable level of workmanship required in order to meet contract specifications.

3.6.2 Initial Phase

This phase shall be accomplished at the beginning of a definable feature of work. The following shall be accomplished:

a. A check of work to ensure that it is in full compliance with contract requirements. Review minutes of the preparatory meeting.

b. Verify adequacy of controls to ensure full contract compliance. Verify required control inspection and testing.

c. Establish level of workmanship and verify that it meets minimum

acceptable workmanship standards. Compare with required sample panels as appropriate.

d. Resolve all differences.

e. Check safety to include compliance with and upgrading of the safety plan and activity hazard analysis. Review the activity analysis with each worker.

f. The Government shall be notified at least 48 hours in advance of beginning the initial phase. Separate minutes of this phase shall be prepared by the CQC System Manager and attached to the daily CQC report. Exact location of initial phase shall be indicated for future reference and comparison with follow-up phases.

g. The initial phase should be repeated for each new crew to work onsite, or any time acceptable specified quality standards are not being met.

3.6.3 Follow-up Phase

Daily checks shall be performed to assure control activities, including control testing, are providing continued compliance with contract requirements, until completion of the particular feature of work. The checks shall be made a matter of record in the CQC documentation. Final follow-up checks shall be conducted and all deficiencies corrected prior to the start of additional features of work which may be affected by the deficient work. The Contractor shall not build upon nor conceal non-conforming work.

3.6.4 Additional Preparatory and Initial Phases

Additional preparatory and initial phases shall be conducted on the same definable features of work if: the quality of on-going work is unacceptable; if there are changes in the applicable CQC staff, onsite production supervision or work crew; if work on a definable feature is resumed after a substantial period of inactivity; or if other problems develop.

3.7 TESTS

3.7.1 Testing Procedure

The Contractor shall perform specified or required tests to verify that control measures are adequate to provide a product which conforms to contract requirements. Upon request, the Contractor shall furnish to the Government duplicate samples of test specimens for possible testing by the Government. Testing includes operation and/or acceptance tests when specified. The Contractor shall procure the services of a Corps of Engineers approved testing laboratory or establish an approved testing laboratory at the project site. The Contractor shall perform the following activities and record and provide the following data:

a. Verify that testing procedures comply with contract requirements.

b. Verify that facilities and testing equipment are available and comply with testing standards.

c. Check test instrument calibration data against certified standards.

d. Verify that recording forms and test identification control number system, including all of the test documentation requirements, have been prepared.

e. Results of all tests taken, both passing and failing tests, shall be recorded on the CQC report for the date taken. Specification paragraph reference, location where tests were taken, and the sequential control number identifying the test shall be given. If approved by the Contracting Officer, actual test reports may be submitted later with a reference to the test number and date taken. An information copy of tests performed by an offsite or commercial test facility shall be provided directly to the Contracting Officer. Failure to submit timely test reports as stated may result in nonpayment for related work performed and disapproval of the test facility for this contract.

3.7.2 Testing Laboratories

3.7.2.1 Capability Check

The Government reserves the right to check laboratory equipment in the proposed laboratory for compliance with the standards set forth in the contract specifications and to check the laboratory technician's testing procedures and techniques. Laboratories utilized for testing soils, concrete, asphalt, and steel shall meet criteria detailed in ASTM D 3740 and ASTM E 329.

3.7.2.2 Capability Recheck

If the selected laboratory fails the capability check, the Contractor will be assessed a charge of $1,000.00 to reimburse the Government for each succeeding recheck of the laboratory or the checking of a subsequently selected laboratory. Such costs will be deducted from the contract amount due the Contractor.

3.7.3 Onsite Laboratory

The Government reserves the right to utilize the Contractor's control testing laboratory and equipment to make assurance tests, and to check the Contractor's testing procedures, techniques, and test results at no additional cost to the Government.

3.7.4 Furnishing or Transportation of Samples for Testing

Costs incidental to the transportation of samples or materials shall be borne by the Contractor. Samples of materials for test verification and acceptance testing by the Government shall be delivered to the Corps of Engineers Division Laboratory, f.o.b., at the following address:

For delivery by mail: U. S. Army Corp of Engineers
Norfolk District
803 Front Street
Norfolk, VA 23510-1096

For other deliveries: U. S. Army Corp of Engineers
Norfolk District
803 Front Street
Norfolk, VA 23510-1096

Coordination for each specific test, exact delivery location, and dates will be made through the Area Office.

3.8 COMPLETION INSPECTION

3.8.1 Punch-Out Inspection

Near the end of the work, or any increment of the work established by a time stated in the Special Clause, "Commencement, Prosecution, and Completion of Work", or by the specifications, the CQC Manager shall conduct an inspection of the work. A punch list of items which do not conform to the approved drawings and specifications shall be prepared and included in the CQC documentation, as required by paragraph DOCUMENTATION. The list of deficiencies shall include the estimated date by which the deficiencies will be corrected. The CQC System Manager or staff shall make a second inspection to ascertain that all deficiencies have been corrected. Once this is accomplished, the Contractor shall notify the Government that the facility is ready for the Government Pre-Final inspection.

3.8.2 Pre-Final Inspection

The Government will perform the pre-final inspection to verify that the facility is complete and ready to be occupied. A Government Pre-Final Punch List may be developed as a result of this inspection. The Contractor's CQC System Manager shall ensure that all items on this list have been corrected before notifying the Government, so that a Final inspection with the customer can be scheduled. Any items noted on the Pre-Final inspection shall be corrected in a timely manner. These inspections and any deficiency corrections required by this paragraph shall be accomplished within the time slated for completion of the entire work or any particular increment of the work if the project is divided into increments by separate completion dates.

3.8.3 Final Acceptance Inspection

The Contractor's Quality Control Inspection personnel, plus the superintendent or other primary management person, and the Contracting Officer's Representative shall be in attendance at the final acceptance inspection. Additional Government personnel including, but not limited to, those from Base/Post Civil Facility Engineer user groups, and major commands may also be in attendance. The final acceptance inspection will be formally scheduled by the Contracting Officer based upon results of the Pre-Final inspection. Notice shall be given to the Contracting Officer at least 14 days prior to the final acceptance inspection and shall include the Contractor's assurance that all specific items previously identified to the Contractor as being unacceptable, along with all remaining work performed under the contract, will be complete and acceptable by the date scheduled for the final acceptance inspection. Failure of the Contractor to have all contract work acceptably complete for this inspection will be cause for the Contracting Officer to bill the Contractor for the Government's additional inspection cost in accordance with the contract clause titled "Inspection of Construction".

3.9 DOCUMENTATION

The Contractor shall maintain current records providing factual evidence that required quality control activities and/or tests have been performed. These records shall include the work of subcontractors and suppliers and

shall be on an acceptable form that includes, as a minimum, the following information:

a. Contractor/subcontractor and their area of responsibility.

b. Operating plant/equipment with hours worked, idle, or down for repair.

c. Work performed each day, giving location, description, and by whom. When Network Analysis (NAS) is used, identify each phase of work performed each day by NAS activity number.

d. Test and/or control activities performed with results and references to specifications/drawings requirements. The control phase shall be identified (Preparatory, Initial, Follow-up). List of deficiencies noted, along with corrective action.

e. Quantity of materials received at the site with statement as to acceptability, storage, and reference to specifications/drawings requirements.

f. Submittals and deliverables reviewed, with contract reference, by whom, and action taken.

g. Offsite surveillance activities, including actions taken.

h. Job safety evaluations stating what was checked, results, and instructions or corrective actions.

i. Instructions given/received and conflicts in plans and/or specifications.

j. Contractor's verification statement.

These records shall indicate a description of trades working on the project; the number of personnel working; weather conditions encountered; and any delays encountered. These records shall cover both conforming and deficient features and shall include a statement that equipment and materials incorporated in the work and workmanship comply with the contract. The original and one copy of these records in report form shall be furnished to the Government daily within 72 hours after the date covered by the report, except that reports need not be submitted for days on which no work is performed. As a minimum, one report shall be prepared and submitted for every 7 days of no work and on the last day of a no work period. All calendar days shall be accounted for throughout the life of the contract. The first report following a day of no work shall be for that day only. Reports shall be signed and dated by the CQC System Manager. The report from the CQC System Manager shall include copies of test reports and copies of reports prepared by all subordinate quality control personnel.

3.10 SAMPLE FORMS

Sample forms enclosed at the end of this section.

3.11 NOTIFICATION OF NONCOMPLIANCE

The Contracting Officer will notify the Contractor of any detected noncompliance with the foregoing requirements. The Contractor shall take

immediate corrective action after receipt of such notice. Such notice, when delivered to the Contractor at the work site, shall be deemed sufficient for the purpose of notification. If the Contractor fails or refuses to comply promptly, the Contracting Officer may issue an order stopping all or part of the work until satisfactory corrective action has been taken. No part of the time lost due to such stop orders shall be made the subject of claim for extension of time or for excess costs or damages by the Contractor.

-- End of Section --

SECTION 01500
TEMPORARY CONSTRUCTION FACILITIES

3/98

PART 1 GENERAL

1.1 GENERAL REQUIREMENTS

1.1.1 Site Plan

The Contractor shall prepare a site plan indicating the proposed location and dimensions of any area to be fenced and used by the Contractor, the number of trailers to be used, entrance(s), utilities, and details of the fence installation. Any areas which may have to be graveled to prevent the tracking of mud shall also be identified. The Contractor shall also indicate any supplemental or other staging area.

1.1.2 Identification of Employees

The Contractor shall be responsible for furnishing to each employee and for requiring each employee engaged on the work to display identification as approved and directed by the Contracting Officer. Prescribed identification shall immediately be delivered to the Contracting Officer for cancellation upon release of any employee. When required, the Contractor shall obtain and provide fingerprints of persons employed on the project. Contractor and subcontractor personnel shall wear identifying markings on hard hats clearly identifying the company for whom the employee works.

1.1.3 Employee Parking

Contractor employees shall park privately owned vehicles in an area designated by the Contracting Officer. This area will not necessarily be within reasonable walking distance of the construction site. The Contractor shall provide transportation between the parking area and the construction site. Contractor employee parking shall not interfere with existing and established parking requirements of the facility.

1.2 AVAILABILITY AND USE OF UTILITY SERVICES

1.2.1 Payment for Utility Services

The Government will make all reasonably required utilities available to the Contractor from existing outlets and supplies, as specified in the contract. Unless otherwise provided in the contract, the amount of each utility service consumed shall be charged to or paid for by the Contractor at prevailing rates charged to the Government or, where the utility is produced by the Government, at reasonable rates determined by the Contracting Officer. The Contractor shall carefully conserve any utilities furnished without charge.

1.2.2 Temporary Connections

The Contractor, at its expense and in a workmanlike manner satisfactory to the Contracting Officer, shall provide, install, and maintain all necessary temporary connections and distribution lines. The Contractor shall notify the Contracting Officer, in writing, 5 working days before making final electrical connections.

1.2.3 Advance Deposit

An advance deposit for utilities consisting of an estimated month's usage or a minimum of $50.00 will be required. The last monthly bills for the Federal fiscal year (01 Oct through 30 Sep of the following year) will normally be offset by the deposit and adjustments will be billed or returned as appropriate. Services to be rendered for the next Federal fiscal year, beginning 1 October, will require a new deposit. Notification of the due date for this deposit will be mailed to the Contractor prior to the end of the current Federal fiscal year.

1.2.4 Final Meter Reading

Before completion of the project work and final acceptance of the work by the Government, the Contractor shall notify the Contracting Officer, in writing, 5 working days before termination is desired. The Government will take a final meter reading, disconnect service, remove the meter(s) and notify the Contractor of the final amount due, if any. The Contractor shall then remove all the temporary distribution lines, meter base(s), and associated paraphernalia, and restore all disturbed areas to original condition or better prior to final acceptance of the work by the Government.. The Contractor shall pay all outstanding utility bills before final acceptance of the work by the Government.

1.2.5 Sanitation

The Contractor shall provide and maintain within the construction area minimum field-type sanitary facilities approved by the Contracting Officer. Government toilet facilities will not be available to Contractor's personnel.

1.2.6 Telephone

The Contractor shall make arrangements and pay all costs for telephone facilities desired.

1.3 BULLETIN BOARD, PROJECT SIGN, AND PROJECT SAFETY SIGN

1.3.1 Bulletin Board

Within fifteen days after receipt of the Notice To Proceed, the Contractor shall provide a weatherproof bulletin board not less than 36 by 48 inches in size for displaying the Equal Employment Opportunity poster, a copy of the wage decision contained in the contract documents, Wage Rate Information poster, and other information required or approved by the Contracting Officer. The bulletin board shall be located at the project site in a conspicuous place, easily accessible to all employees, as approved by the Contracting Officer. Legible copies of the aforementioned data shall be displayed until work under this contract is completed. Upon completion of work the bulletin board shall be removed by and remain the property of the Contractor.

1.3.2 Project and Safety Signs

The requirements for the signs, their content, and location shall be provided at a location designated by the Contracting Officer. The signs shall be erected within 15 days after receipt of the Notice to Proceed. The data required by the safety sign shall be corrected daily, with light

colored metallic or non-metallic numerals. Upon completion of the project, the signs shall be removed and disposed of by the Contractor.

1.3.2.1 Project Sign

The project sign shall conform to the requirements as indicated on Attachment No.1, attached hereto.

1.3.2.2 Safety Sign

The safety sign shall conform to the requirements as indicated on Attachment No.2, attached hereto. The data required by the sign shall be corrected daily, with light colored metallic or non-metallic numerals. Numerals, including mounting hardware, shall be subject to the approval of the CO.

1.3.2.3 Payment

No separate payment will be made for the sign work covered under this section of the specifications and all costs in connection therewith will be considered as a subsidiary obligation of the Contractor, covered by the contract prices in this contract.

1.4 PROTECTION AND MAINTENANCE OF TRAFFIC

During construction the Contractor shall provide access and temporary relocated roads as necessary to maintain traffic. The Contractor shall maintain and protect traffic on all affected roads during the construction period except as otherwise specifically directed by the Contracting Officer. Measures for the protection and diversion of traffic, including the provision of watchmen and flag men, erection of barricades, placing of lights around and in front of equipment and the work, and the erection and maintenance of adequate warning, danger, and direction signs, shall be as required by the State and local authorities having jurisdiction. The traveling public shall be protected from damage to person and property. The Contractor's traffic on roads selected for hauling material to and from the site shall interfere as little as possible with public traffic. The Contractor shall investigate the adequacy of existing roads and the allowable load limit on these roads. The Contractor shall be responsible for the repair of any damage to roads caused by construction operations.

1.4.1 Haul Roads

The Contractor shall, at its own expense, construct access and haul roads necessary for proper prosecution of the work under this contract. Haul roads shall be constructed with suitable grades and widths; sharp curves, blind corners, and dangerous cross traffic shall be avoided. The Contractor shall provide necessary lighting, signs, barricades, and distinctive markings for the safe movement of traffic. The method of dust control shall be adequate to ensure safe operation at all times. Location, grade, width, and alignment of construction and hauling roads shall be subject to approval by the Contracting Officer. Lighting shall be adequate to assure full and clear visibility for full width of haul road and work areas during any night work operations. Upon completion of the work, haul roads designated by the Contracting Officer shall be removed.

1.4.2 Barricades

The Contractor shall erect and maintain temporary barricades to limit

public access to hazardous areas. Such barricades shall be required whenever safe public access to paved areas such as roads, parking areas or sidewalks is prevented by construction activities or as otherwise necessary to ensure the safety of both pedestrian and vehicular traffic. Barricades shall be securely placed, clearly visible with adequate illumination to provide sufficient visual warning of the hazard during both day and night. Barricades and other physical protection shall be in accordance with EM 385-1-1.

1.5 CONTRACTOR'S TEMPORARY FACILITIES

1.5.1 Administrative Field Offices and Storage Areas

The Contracting Officer will designate an area within which the Contractor shall be permitted to place administrative or storage trailers for equipment and limited construction materials other than in trailers. The Contractor shall provide and maintain administrative field office facilities within the construction area at the designated site. Government office and warehouse facilities will not be available to the Contractor's personnel.

1.5.1.1 Government Office Space

The Contractor shall provide a temporary Office trailer for use exclusively by the Government for the duration of the Contract. Upon final acceptance of the work, the Contractor shall remove the trailer and restore the site to conditions existing prior to commencement of work. It shall be equipped and serviced as follows:

a. 720 square feet with the width no less than 12 feet.

b. Located on the site as directed by the Contracting Officer.

c. Like new in appearance with at least one operable window in each exterior wall.

d. Toilet and lavatory in a separate room, including sewer and water connections. One faucet at lavatory to include hot water (no water or sewer lines available, water storage tank required plus a portable holding tank).

e. Exterior door(s) three feet wide with hasp for locking. Hasps shall be mounted with bolts extending through the door and wall.

f. Entrance landing and steps per 29 CFR 1910 (OSHA Standards).

g. Electrical service (one main connection) sufficient to supply all required features simultaneously.

h. Four five-button telephones, connected. Two telephone lines. Two additional telephone lines complete, for network and modem connections and fax machine.

i. One file rack for storage of full size drawings.

j. One conference table and 10 chairs.

k. Four office desks with drawers, nominal size 2.5 feet by 5.0 feet.

l. Facsimile machine, connection, and table. To use 8-1/2" by 11" copier paper, not thermal.

m. Four swivel office chairs.

n. One refrigerator, 15 cubic feet minimum.

o. One microwave oven, 700 watts minimum.

p. Janitorial service twice a week.

q. Maintenance to keep trailer in like new condition.

r. Heated and air conditioned to 75 degrees F.

s. Interior overhead lighting.

t. Drinking water facilities.

u. Copier, capable of 12 copies per minute and reduction/enlargement. Copy size to 8-1/2" x 14".

v. Drawing/drafting table.

w. Two four-drawer file cabinets.

1.5.1.2 Storage Area(s)

The Contractor shall construct a temporary 6-foot high chain link fence around all trailers and materials. Fence posts may be driven in lieu of concrete bases where soil conditions permit. No trailers, materials, or equipment shall be placed or stored outside the fenced area unless such trailers, materials or equipment are assigned a separate and distinct storage area by the CO away from the vicinity of the construction site but within the boundaries of the Post. At no time shall trailers, equipment or materials be open to public view with the exception of those items which are in support of ongoing work on any given day. Materials shall not be stockpiled outside the fence in preparation for the next day's work. At the end of each work day, mobile equipment such as tractors, wheeled lifting equipment, cranes, trucks and like equipment shall be parked within the fenced area.

1.5.1.3 Supplemental Storage Area(s)

Upon request of the Contractor, the CO will designate another or supplemental area for the Contractor's use and storage of trailers, equipment and materials. This area may not be in close proximity to the construction site, but shall be within the boundaries of the Post. Fencing of materials or equipment will be required at this site; however, the Contractor shall be responsible for cleanliness and orderliness of the storage area used. The Contractor shall be responsible for the security of any materials or equipment stored in this area. No utilities will be provided to this area by the Government.

1.5.1.4 Appearance of Trailers

Trailers utilized by the Contractor, whether for the purpose of administrative use or materials storage, shall present a clean and neat

exterior appearance and be in a state of good repair. Trailers which, in the opinion of the CO, are not in good repair shall not be allowed on the Post.

1.5.1.5 Equipment

Any item of construction equipment, with the exception of hand tools, which becomes inoperable shall be repaired within five (5) working days or removed from the construction site.

1.5.1.6 Maintenance of Storage Area(s)

It shall be the responsibility of the Contractor to keep all fencing in a state of good repair and proper alignment. Should the Contractor elect to traverse grassed or other areas without paving that are not established roadways, with construction equipment or other vehicles, such grassed or other areas shall be covered with a layer of gravel as necessary to prevent rutting and to prevent the tracking of mud onto paved or established roadways. Gradation of the gravel shall be at the discretion of the Contractor. The Contractor shall be responsible for the cutting of grass located within the boundaries of the construction site for the duration of the project. Grass and vegetation along fences, buildings, under trailers and in areas not accessible to mowers shall be edged or trimmed neatly.

1.5.1.7 Sanitation

It shall be the responsibility of the Contractor to provide and maintain minimum field-type sanitary facilities, approved by the CO, within the construction area. Present Government toilet facilities will not be available to the Contractor's personnel.

1.5.1.8 Telephone

The Contractor shall be responsible for making all arrangements and paying all cost for telephone facilities he may require.

1.5.2 See Note

1.5.3 Security Provisions

Adequate outside security lighting shall be provided at the Contractor's temporary facilities. The Contractor shall be responsible for the security of its own equipment; in addition, the Contractor shall notify the appropriate law enforcement agency requesting periodic security checks of the temporary project field office.

1.6 CLEANUP

Construction debris, waste materials, packaging material and the like shall be removed from the work site daily. Any dirt or mud which is tracked onto paved or surfaced roadways shall be cleaned away. Materials resulting from demolition activities which are salvageable shall be stored within the fenced area described above or at the supplemental storage area. Stored material not in trailers, whether new or salvaged, shall be neatly stacked when stored.

1.7 RESTORATION OF STORAGE AREA

Upon completion of the project and after removal of trailers, materials,

and equipment from within the fenced area, the fence shall be removed and will become the property of the Contractor. Areas used by the Contractor for the storage of equipment or material, or other use, shall be restored to the original or better condition. Gravel used to traverse grassed areas shall be removed and the area restored to its original condition, including top soil and seeding as necessary.

PART 2 PRODUCTS (Not Applicable)

PART 3 EXECUTION (Not Applicable)

-- End of Section --

SIGN ERECTION DETAILS

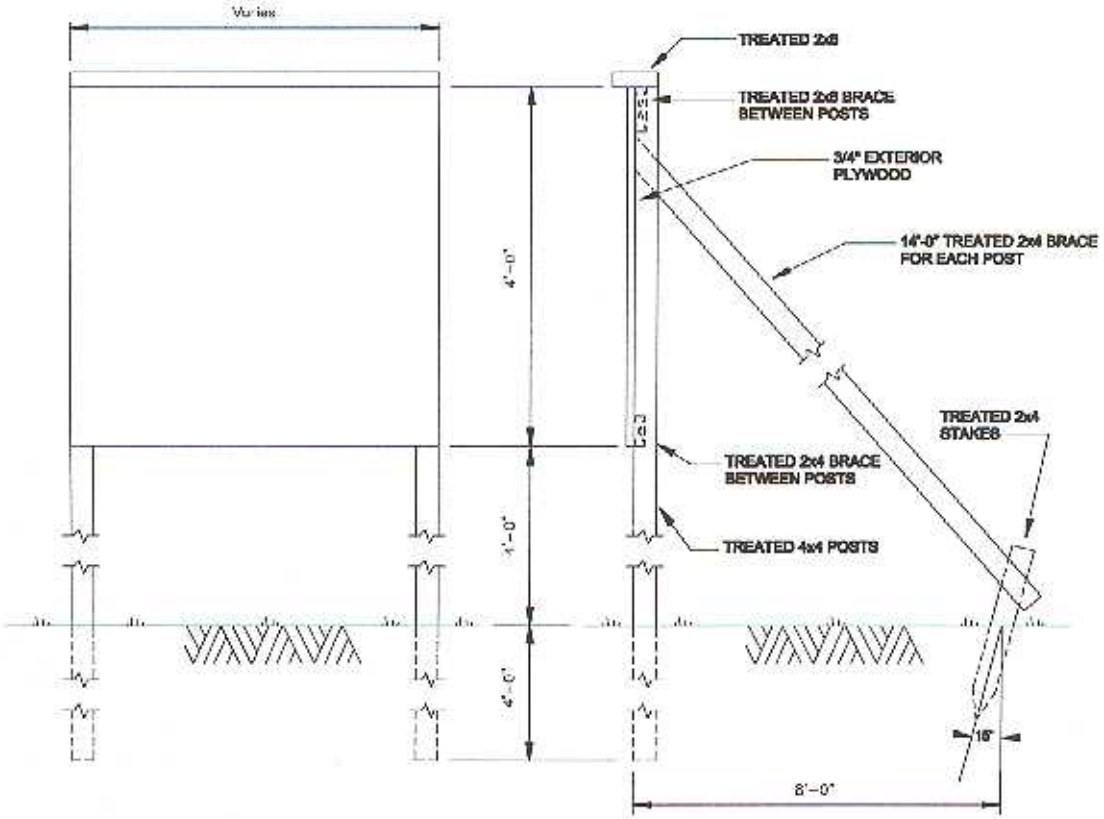

Attachment 1B

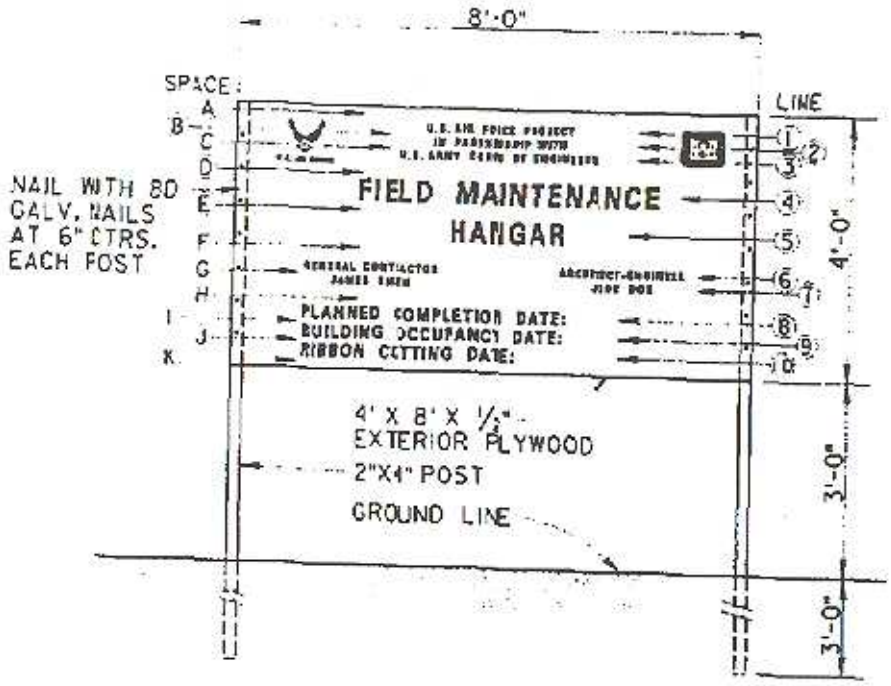

FRONT VIEW

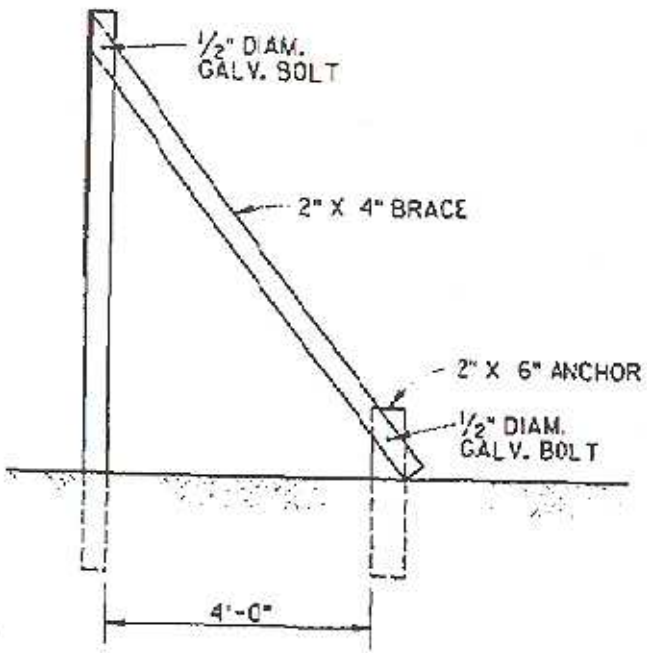

END VIEW

U.S. AIR FORCE ACC MCP PROJECT SIGN DETAILS

NOTES:

1. POSTS SHALL BE S4S.
2. PLYWOOD SHALL BE EXTERIOR TYPE, A-C GRADE.
3. BEFORE PAINTING, SURFACE SHALL BE CLEAN, DRY, FREE OF GREASE AND SANDED.
4. PAINT WITH ONE EXTERIOR OIL PRIME COAT AND EXTERIOR TYPE ALKYD, CONFORMING TO MASTER PAINTERS INSTITUTE MPI-9, MPI GLOSS LEVEL 6. COLOR SHALL MATCH SHERWIN WILLIAMS SW 2175.
5. ALL LETTERING SHALL BE EXTERIOR TYPE ALKYD. COLOR SHALL MATCH SHERVIN WILLIAMS SW 1900.
6. DECALOMANIA FOR CORPS OF ENGINEERS INSIGNIA AND U.S. AIR FORCE EMBLEM WILL BE FURNISHED BY THE CONTRACTING OFFICER FOR INSTALLATION BY THE CONTRACTOR.
7. ALL EXPOSED WOOD (POSTS, SUPPORTS, BACK, ETC.) SHALL BE PAINTED THE SAME BACKGROUND COLOR AS THE SIGN.
8. LETTERING STYLE SHALL BE EITHER HELIOS EXTRA BOLD CONDENSED, HELIOS BOLD II, HELVETICA BLACK ROMAN, OR HELVETICA BOLD ROMAN.

SCHEDULE

SPACE	HEIGHT	LINE	DESCRIPTION	LETTER HEIGHT	STROKE
A	3"	1	U.S. AIR FORCE PROJECT	1.5"	3/16"
B	1"	2	IN PARTNERSHIP WITH	1.5"	3/16"
C	1"	3	U.S. ARMY CORPS OF ENGINEERS	1.5"	3/16"
D	4"	4	PROJECT NAME	4"	1/2"
E	3"	5	PROJECT NAME CONT'D (IF REQ'D)	4"	1/2"
F	4"	6	GENERAL CONTRACTOR/A-E	1.5"	3/16"
G	1"	7	GENERAL CONTRACTOR/A-E	1.5"	3/16"
H	4"	8	PLANNED COMPLETION DATE	2.5"	1/4"
I	1"	9	BUILDING OCCUPANCY DATE	2.5"	1/4"
J	1"	10	RIBBON CUTTING DATE	2.5"	1/4"
K	2"				

Atch 2

SAFETY SIGN

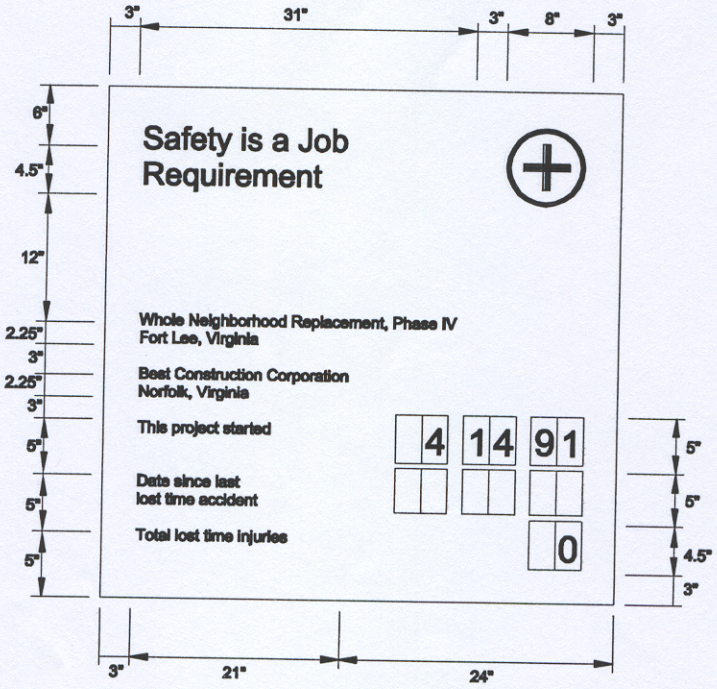

All typography is flush left and rag right, upper and lower case with initial capitals only as shown. Letter and word spacing to follow Corps Standards (EP 310-1-6a and 6b).

Legend Group 1: Standard two-line title "Safety is a Job Requirement" with (8" od.) Safety Green First Aid logo. Typeface: 3" Helvetiva Bold; Color: Black.

Legend Group 2: One to two-line project title legend describes the work being done under this contract and name of host project. Typeface: 1.5" Helvetica Regular; Color: Black; Maximum line length: 42".

Legend Group 3: One to two-line identification: name of prime contractor and city, state address. Typeface: 1.5" Helvetica Regular; Color: Black; Maximum line length: 42".

Legend Group 4: Standard safety record captions as shown. Typeface 1.25" Helvetica Regular; Color: Black.

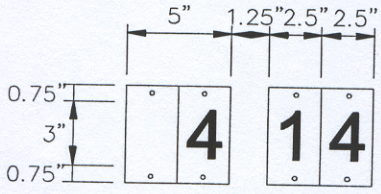

Replaceable numbers are to be mounted on white 0.060 aluminum plates and screw-mounted to backdrop. Typeface: 3" Helvetica Regular; Color: Black; Plate size: 2.5"x 4.5".

Attachment 1A

SECTION 01560
ENVIRONMENTAL PROTECTION (PROJECT SITE)

03/96

PART 1 GENERAL

1.1 DEFINITIONS

For the purpose of this specification environmental pollution is defined as the presence of chemical, physical, or biological elements or agents which adversely affect human health or welfare, unfavorably alter ecological balances of importance to human life, and may affect other species and natural resources of importance to man.

1.2 REFERENCES

The publications listed below form a part of this specification to the extent referenced. The publications are listed in the text by basic designation only.

CODE OF FEDERAL REGULATIONS (CFR)

29 CFR 1910.94-SUBPART G	Occupational Health and Environmental Control
40 CFR 261	Identification and Listing of Hazardous Waste
40 CFR 262	Generators of Hazardous Waste
40 CFR 263	Transporters of Hazardous Waste
40 CFR 264	Owners and Operators of Hazardous Waste Treatment, Storage, and Disposal Facilities
49 CFR 178	Shipping Container Specifications

CORPS OF ENGINEERS (COE)

EP-1165-2-304	Perspective on Flood Plain Regulations for Flood Plain Management (1976)
ER-1165-2-26	Implementation of Executive Order 11988 on Flood Plain Management (March 1984)
EM 385-1-1	Safety and Health Requirements Manual (September 1996)

VIRGINIA SOIL AND WATER CONSERVATION COMMISSION (VSWCC)

VESCH	Virginia Erosion and Sediment Control Handbook (1992)

VIRGINIA ADMINISTRATIVE CODE

9VAC25-31	Virginia Pollutant Discharge Elimination System

9VAC25-180	(VPDES) General Permit For Storm Water Discharges From Construction Sites

1.3 SUBMITTALS

The contractor shall submit the following in accordance with Section 01300 SUBMITTAL PROCEDURES.

SD-01 Data

Preconstruction Survey; GA

Prior to commencement of work the Contractor shall perform a preconstruction survey of the project site with the Contracting Officer and take photographs showing existing environmental conditions in and adjacent to the site. A brief report of the results of this survey shall be prepared by the contractor and copies furnished to the Contracting Officer. The contractor shall certify that he has read and understands regulations 29 CFR 1910.94-SUBPART G, 40 CFR 261, 40 CFR 262, 40 CFR 263, 40 CFR 264, 49 CFR 178, EP-1165-2-304, ER-1165-2-26, 9VAC25-31, 9VAC25-180, and VESCH provide proof that he has performed work in accordance with these regulations.

Environmental Protection Plan; GA

The Contractor shall submit for approval within 10 days after Notice to Proceed, and prior to any work on the site, his written Environmental Protection Plan.The Contractor shall meet with the Contracting Officer, to discuss the proposed Environmental Protection Plan and to develop mutual understanding relative to the details of environmental protection, including measures for protecting natural resources, required reports, and other measures to be taken. The plan shall demonstrate compliance with 29 CFR 1910.94-SUBPART G, 40 CFR 261, 40 CFR 262, 40 CFR 263, 40 CFR 264, 49 CFR 178, EM 385-1-1, EP-1165-2-304, ER-1165-2-26, VR 680-14-19, and VESCH.

Erosion Control Plan; GA

The contractor shall, within 10 days after the Notice to Proceed, submit an Erosion Control Plan in accordance with VESCH and as otherwise specified for approval of the Contracting Officer, showing the Contractor's scheme for controlling erosion and disposing of wastes. The Erosion Control Plan shall include as a minimum the following items indicating adequate measures to:

a. Reduce by the greatest extent practicable the area and duration of exposure of readily erodible soils.

b. Protect the soils by use of temporary vegetation, or seeding and mulch, or by accelerating the establishment of permanent vegetation. Complete and protect segments of work as rapidly as is consistent with construction schedules.

c. Retard the rate of runoff from the construction site and control disposal of runoff.

d. Sprinkle or apply dust suppressors, or otherwise keep dust within tolerable limits on haul roads and at the site.

e. Borrow areas furnished by the contractor shall be at a location where pollution from the operation can be minimized. Locations should be avoided where pollution would be inevitable.

f. Provide temporary measures for the control of erosion in the event construction operations are suspended for any appreciable length of time.

g. Provide protection against discharge of pollutants such as chemicals, fuel, lubricants, or sewage into any stream.

h. Locate sanitary facilities away from streams, wells, or springs.

1.4 GENERAL REQUIREMENTS

1.4.1 General

The work covered by this section consists of furnishing all labor, materials and equipment and performing all work required for the prevention of environmental pollution during and as the result of construction operations under this contract. In the event the measures set forth in other Technical Provisions of these specifications and this Section conflict, the most stringent standard shall apply. The control of environmental pollution requires consideration of air, water, and land.

1.4.2 Provisions

Provide and maintain, during the life of the contract, environmental protection. Plan for and provide environmental protective measures to control pollution that develops during normal construction practice. Plan for and provide environmental protective measures required to correct conditions that develop during the construction of permanent or temporary environmental features associated with the project.

1.4.3 Compliance

The contractor shall comply with Federal, state, and local regulations pertaining to the environmental pollution control and abatement, including but not limited to water, air, land, and noise pollution. All applicable provisions of the Corps of Engineers Manual, EM 385-1-1, entitled "Safety and Health Requirements Manual" in effect on the date of solicitation, as well as the specific requirements stated elsewhere in the contract specifications shall be strictly observed and enforced.

PART 2 PRODUCTS (Not Applicable)

PART 3 EXECUTION

3.1 NOTIFICATION

The Contracting Officer will notify the contractor in writing of any non-compliance with the foregoing provisions and the action to be taken. The contractor shall, after receipt of such notice, immediately take corrective action. Such notice, when delivered to the contractor or his authorized representative at the site of the work, shall be deemed sufficient for the purpose. If the contractor fails or refuses to comply promptly, the Contracting Officer may issue an order stopping all or part of the work until satisfactory corrective action has been taken. No part of the time lost due to any such stop orders shall be made the subject of a

claim for extension of time or for excess costs or damages by the contractor unless it was later determined that the contractor was in compliance.

3.2 SUBCONTRACTORS

Compliance with the provisions of this section by subcontractors will be the responsibility of the contractor.

3.3 PROTECTION OF WATER RESOURCES

The contractor shall not pollute streams, lakes or reservoirs with fuels, oils, bitumens, calcium chloride, acid construction wastes or other harmful materials. It is the responsibility of the contractor to investigate and comply with all applicable Federal, State, County and Municipal laws concerning pollution of rivers and streams. All work under this contract shall be performed in such a manner that objectionable conditions will not be created in streams through or adjacent to the project areas.

3.4 INDUSTRIAL POLLUTION HAZARDS

Hazardous substances as defined in 40 CFR 261 or as defined by applicable state and local regulations, and dust which poses air pollution hazards shall be controlled as approved to comply with all applicable laws which govern the work.

3.4.1 DUST CONTROL

The contractor shall maintain all work areas free from dust which would contribute to air pollution. Approved temporary methods of stabilization consisting of sprinkling, chemical treatment, light bituminous treatment or similar methods will be permitted to control dust. Sprinkling, to be approved, must be repeated at such intervals as to keep all parts of the disturbed area at least damp at all times, and the contractor must have sufficient competent equipment on the job to accomplish this if sprinkling is used. Dust control shall be performed as the work proceeds and whenever a dust nuisance or hazard occurs.

3.5 MAINTENANCE OF POLLUTION CONTROL FACILITIES DURING CONSTRUCTION

During the life of this contract the contractor shall maintain all facilities constructed for pollution control under this contract as long as the operations creating the particular pollutant are being carried out or until the material concerned has become stabilized to the extent that pollution is no longer being created.

3.6 MAINTENANCE OF PERMITS

The Contractor shall immediately provide to the Contracting Officer two copies of any modification, revocation or reissuance of any applicable permit required to complete the work. The Contractor shall provide two copies of all correspondence with Federal, State or Local Government offices regarding any applicable permit within 5 days. The Contractor shall notify the Contracting Officer in writing at least 5 days prior to any visit to the site by any Federal, State or Local Government office, other than those scheduled by the Contracting Officer, scheduled to observe compliance with applicable permits provided the Contractor receives at least 5 days notice. Otherwise the Contractor shall immediately provide the Contracting Officer written notice of the date, time, office(s)

participating and features to be observed by the most expeditious means available.

-- End of Section --

SECTION 01572A

CONSTRUCTION AND DEMOLITION WASTE MANAGEMENT
9/01

1.1 GOVERNMENT POLICY

Government policy is to apply sound environmental principles in the design, construction and use of facilities. As part of the implementation of that policy the Contractor shall: (1) practice efficient waste management when sizing, cutting, and installing products and materials and (2) use all reasonable means to divert construction and demolition waste from landfills and incinerators and to facilitate their recycling or reuse.

1.2 MANAGEMENT

The Contractor shall take a pro-active, responsible role in the management of construction and demolition waste and require all subcontractors, vendors, and suppliers to participate in the effort. Construction and demolition waste includes products of demolition or removal, excess or unusable construction materials, packaging materials for construction products, and other materials generated during the construction process but not incorporated into the work. In the management of waste consideration shall be given to the availability of viable markets, the condition of the material, the ability to provide the material in suitable condition and in a quantity acceptable to available markets, and time constraints imposed by internal project completion mandates. The Contractor shall be responsible for implementation of any special programs involving rebates or similar incentives related to recycling of waste. Revenues or other savings obtained for salvage, or recycling shall accrue to the Contractor. Firms and facilities used for recycling, reuse, and disposal shall be appropriately permitted for the intended use to the extent required by federal, state, and local regulations.

1.3 PLAN

A waste management plan shall be submitted within 15 days after contract award and prior to initiating any site preparation work. The plan shall include the following:

a. Name of individuals on the Contractor's staff responsible for waste prevention and management.

b. Actions that will be taken to reduce solid waste generation.

c. Description of the specific approaches to be used in recycling/reuse of the various materials generated, including the areas and equipment to be used for processing, sorting, and temporary storage of wastes.

d. Characterization, including estimated types and quantities, of the waste to be generated.

e. Name of landfill and/or incinerator to be used and the estimated costs for use, assuming that there would be no salvage or recycling on the project.

f. Identification of local and regional reuse programs, including non-profit organizations such as schools, local housing agencies, and organizations that accept used materials such as materials exchange networks and Habitat for Humanity.

g. List of specific waste materials that will be salvaged for resale, salvaged and reused, or recycled. Recycling facilities that will be used shall be identified.

h. Identification of materials that cannot be recycled/reused with an explanation or justification.

i. Anticipated net cost savings determined by subtracting Contractor program management costs and the cost of disposal from the revenue generated by sale of the materials and the incineration and/or landfill cost avoidance.

1.4 RECORDS

Records shall be maintained to document the quantity of waste generated; the quantity of waste diverted through sale, reuse, or recycling; and the quantity of waste disposed by landfill or incineration. The records shall be made available to the Contracting Officer during construction, and a copy of the records shall be delivered to the Contracting Officer upon completion of the construction.

1.5 COLLECTION

The necessary containers, bins and storage areas to facilitate effective waste management shall be provided and shall be clearly and appropriately identified. Recyclable materials shall be handled to prevent contamination of materials from incompatible products and materials and separated by one of the following methods:

1.5.1 Source Separated Method.

Waste products and materials that are recyclable shall be separated from trash and sorted into appropriately marked separate containers and then transported to the respective recycling facility for further processing.

1.5.2 Co-Mingled Method.

Waste products and recyclable materials shall be placed into a single container and then transported to a recycling facility where the recyclable materials are sorted and processed.

1.5.3 Other Methods.

Other methods proposed by the Contractor may be used when approved by the Contracting Officer.

1.6 DISPOSAL

Except as otherwise specified in other sections of the specifications, disposal shall be in accordance with the following:

1.6.1 Reuse.

First consideration shall be given to salvage for reuse since little or no

re-processing is necessary for this method, and less pollution is created when items are reused in their original form. Sale or donation of waste suitable for reuse shall be considered. Salvaged materials, other than those specified in other sections to be salvaged and reinstalled, shall not be used in this project.

1.6.2 Recycle.

Waste materials not suitable for reuse, but having value as being recyclable, shall be made available for recycling whenever economically feasible.

1.6.3 Waste.

Materials with no practical use or economic benefit shall be disposed at a landfill or incinerator.

-- End of Section --

SECTION 01711
AS-BUILT RECORD DRAWINGS AND SHOP DRAWINGS
CONTRACTOR PREPARED

01/99

PART 1 GENERAL

1.1 GENERAL

The Contractor shall, upon completion of each facility under this contract, provide the Contracting Officer as-built record contract drawings and as-built reproducible shop drawings.

1.2 DEFINITIONS

a. CADD Drawings: Computer-aided design and drafting (CADD) drawings prepared using AutoCAD Release 14 or later version.

b. Electronic Drawings: CADD drawings furnished on Windows Format CD-ROM.

c. Mylar Drawings: Full-sized CADD drawings furnished on 4.0 mils thick Mylar.

d. Progress Drawings: Full-size blue-line contract drawings annotated by the contractor during construction for the duration of the contract.

e. As-Built Drawings: CADD contract drawings in both electronic format and on Mylar with annotated corrections and changes completed.

1.3 PROGRESS AND AS-BUILT CONTRACT DRAWINGS

1.3.1 Record of Job Progress Changes and Corrections

During the progress of the job, the Contractor shall keep a careful record at the job site of all construction changes and corrections from the layouts and details and conditions shown on the drawings. These progress contract drawings shall be a record of the construction as installed and completed by the Contractor. They shall include all the information shown on the contract set of drawings, and all deviations, modifications, or changes from those drawings, however minor, which were incorporated in the work, including all additional work not appearing on the contract drawings, and all changes which are made after any final inspection of the contract work. The progress drawing changes shall be annotated in a single color (RED) and shall indicate in addition to all changes and corrections, the actual location, kinds and sizes of all subsurface utility lines. In order that the location of these lines and appurtenances may be determined in the event the surface openings or indicators become covered over or obscured, the progress drawings shall show, by offset dimensions to two permanently fixed surface features, the end of each run including each change in direction. Valves, splice boxes and similar appurtenances shall be located by dimensioning along the utility run from a reference point. The depth below the surface of each run shall also be recorded at each high and low point.

1.3.2 Additional Work

In the event the Contractor accomplished additional work which changes the as-built conditions of the facility after submission of the final progress drawings, the Contractor shall furnish revised and/or additional drawings as required to depict final as-built conditions. The requirements for these additional drawings will be the same as for the as-built drawings specified in this paragraph.

1.3.3 Daily Record of As-Built Conditions

The Contractor shall maintain a full-size set of contract drawings for depicting the record of as-built conditions. These progress drawings shall be maintained in a current condition at all times during the entire contract period and shall be readily available for review by the CO at all times. All changes from the contract plans which are made in the work, or additional information which might be uncovered in the course of construction, shall be recorded on the prints accurately and neatly by means of details and notes using clearly contrasting single colored (RED) pen to permit ready identification of the change to the print. The progress drawings shall reflect correctly scaled drawings of the construction as actually performed, and include but not be limited to as-built features showing:

a. Complete and accurate scaled drawings of as-built conditions that are changed from the contract drawings.

b. Layout and schematic drawings of electrical circuits, pole lines, and piping, etc.

c. Correct dimensions and details transferred from shop drawings and contract changes.

d. Correction of alignment, cross section, and layout of earthwork, roadways, etc.

e. Actual location of anchors, embedded items, construction and control joints, depth of footings, etc., for concrete and masonry work.

f. Changes in location of equipment and architectural features.

g. Deletion of phrases such as "optional requirement," or "or equal,", etc., with a listing of the specific items of material or equipment provided.

h. Unusual or uncharted obstructions encountered in the contract work area during construction.

i. Location, extent, thickness, and size of stone protection, particularly where it will be covered by water.

j. Actual invert locations and elevations, where different from those shown on the contract drawings, for utility and process pipelines.

k. The Contractor shall complete the AS-BUILT DRAWING CHECKLIST, attached hereto, and submit it with the progress drawings.

1.4 AS-BUILT SHOP DRAWINGS

Upon completion of each separate facility or phase of work under this contract, the Contractor shall provide a complete reproducible set of all shop drawings as finally approved and one set of prints. These shop drawings shall show all changes made up to the time the equipment, materials or general construction was completed and accepted. This requirement applies only to those features that are extensions of design (including but not limited to pre-engineered metal buildings and similar), designs provided by the contractor (including but not limited to sprinkler systems and similar), and approved deviations from the contract drawings. Reproducible drawings shall be on Mylar drafting media or approved equal.

1.5 CADD REQUIREMENTS

Only personnel proficient in the preparation of engineering CADD drawings to standards satisfactorily and acceptable to the Government shall be employed to modify the existing electronic drawings or prepare additional new electronic drawings. All additions and corrections to the drawings shall be equal to that on the contract drawings. Title blocks and borders for any new as-built drawings and shop drawing shall match that on the contract drawings. The contractor is responsible for providing all hardware and software necessary to prepare the CADD drawings. When the final revisions have been completed, the cover sheet drawing shall show the wording "AS-BUILT DRAWINGS" followed by the name of the General Contractor in letters at least 3/16" (5mm) high. The revision block on all other drawings shall be dated and be marked as either "AS-BUILT" denoting no revisions on the sheet or "REVISED AS-BUILT" denoting one or more revisions.

1.5.1 Computer Aided Design and Drafting (CADD) Drawings

Additions and corrections to the contract drawings shall be accomplished using CADD media files supplied by the Government. All work by the contractor shall be done on files in the format in which they are provided. Translation of files to a different format, for the purpose of As-Built production, and then retranslating back to the format originally provided will not be acceptable. These contract drawings will be provided in AutoCad .dwg format to the Contractor. The media files will be supplied by the Contractor to the COR on the specified media. The Contractor shall be responsible for providing all program files and hardware necessary to prepare final as-built drawings. The Contracting Officer will review final as-built drawings for accuracy and the Contractor shall make all required corrections, changes, additions, and deletions.

a. When final revisions have been completed, the cover sheet drawing shall show the wording 'RECORD DRAWING AS-BUILT" followed by the name of the Contractor in letters at least 5mm 3/16 inch high. All other contract drawings shall be marked wither "AS-BUILT" drawing denoting no revisions on the sheet or "REVISED AS-BUILT" denoting one or more revisions. Original contract drawings shall be dated in the revision block.

b. Revision markers defined in paragraph shall be placed as follows:

   1. at the detail, placed in the design file where the revised graphics are located and the revision was placed

   2. right hand and bottom border in the drawing sheet file

3. revision block of the title block in the drawing sheet file.

c. All paper prints, mylars, drawing files and storage media submitted will become the property of the Government upon final approval. Failure to submit final as-built drawing files and marked prints as specified shall be cause for withholding any payment due the Contractor under this contract. Approval and acceptance of final as-built drawings shall be accomplished before final payment is made to the Contractor.

1.6 PREPARATION OF AS-BUILT DRAWINGS

The contract drawings shall be modified as may be necessary to correctly show the features of the project as it has been constructed by bringing the contract set into agreement with approved progress drawing prints, adding such additional drawings as may be necessary. These drawings are part of the permanent records of this project and the Contractor shall be responsible for the protection and safety thereof until returned to the Contracting Officer. Any drawings damaged or lost by the Contractor shall be satisfactorily replaced by the Contractor at no expense to the Government.

In the event the Contractor accomplishes additional work which changes the as-built conditions of the facility, after submission and approval of the progress drawings, he shall be responsible for the addition of these changes to the drawings and also to the final as-built documents.

1.6.1 Markings and Indicators

Changes shall be annotated with a triangle and sequential number at the following locations:

a. bottom of the revised detail

b. right hand and bottom border aligned with the revised detail

c. the revision block of the title block.

Separate markings shall be made for each modification negotiated into the contract.

1.7 PAYMENT FOR AS-BUILTS DRAWINGS AND SHOP DRAWINGS

The specification requirement for the preparation of as-built drawings includes the cost for incorporating changes that may be encountered during the contract. The Contractor's Project Schedule shall show separate activities, for each major phase of work, and include appropriate percentage of completion for payment purposes for preparation of as-built drawings. If the Contractor fails to maintain the progress drawings, as-built drawings, or as-built shop drawings, as required herein, the CO will deduct from the monthly progress payment, an amount representing the estimated monthly cost of maintaining the record drawings, and will continue deduction of the 10% retainage even after 50% completion of the contract. In addition, final payment with respect to separately priced facilities or the contract as a whole, will be withheld until proper as-built contract/shop drawings have been provided to the CO.

1.8 SUBMITTAL TO THE CONTRACTING OFFICER FOR REVIEW AND APPROVAL

1.8.1 Progress Drawings

Two sets of the marked-up progress drawings and as-built shop drawings shall be delivered to the CO, at the time of beneficial occupancy of each structure or facility involved under this contract, for review and approval. This submittal shall also include a copy of the AS-BUILT DRAWING CHECKLIST signed by the CQC Manager. If, upon review of the progress drawings, errors and/or omissions are found, the progress marked-up prints will be returned to the Contractor for correction. The package will be returned within 20 days. The contractor will have 10 days to correct any errors and/or omissions and resubmit the package for another review.

1.8.2 Final As-Built Drawings and Shop Drawings

Upon approval of the final progress drawing and shop drawing package, the contractor shall have 20 days to submit the as-built contract drawings and reproducible as-built shop drawings. The as-built drawings shall be CADD drawings in both electronic format and on Mylar with annotated corrections and changes completed. Provide reproducible shop drawings on 4.0 mils thick Mylar the same size as the contract drawings).

AS-BUILT DRAWINGS CHECKLIST

Project	Contract #
Contractor	Date

Check one of the following:

	YES	NO	N/A
1. Revisions to site layout plans indicated.	___	___	___
2. Site Grading Plan:	___	___	___
a. Finish grade change indicated.	___	___	___
b. Manhole location & invert elevations shown correct.	___	___	___
c. Finish floor elevations of building(s) shown correct.	___	___	___
d. Road locations with turn outs, drainage, etc.	___	___	___
3. Exterior utility lines, locations (actual routing), type of material and heat tracing, size & type of valves, drain cocks, air rents, etc., all shown correct for the following:			
a. Gas	___	___	___
b. Water	___	___	___
c. Steam	___	___	___
d. Condensate	___	___	___
e. Sanitary Sewer	___	___	___
f. Electrical Power	___	___	___
g. Communications, Fire alarms, etc.	___	___	___
4. All road layouts & detail revisions noted.	___	___	___

5. Record temporary water, power, or any other utility or structural appurtenance abandoned in place. ___ ___ ___

Check one of the following:

	YES	NO	N/A
6. Architectural:			
a. Floor plans dimensional changes noted.	___	___	___
b. Door locations size & swing revisions indicated.	___	___	___
c. Interior finish schedule changes noted.	___	___	___
d. All wall section and detail changes **noted.**	___	___	___
e. Roof plan drain locations, scuppers, roof mounted equipment and slope shown correct.	___	___	___
f. All Equipment Schedules corrected to reflect actual equipment installed or furnished.	___	___	___
g. Reflected ceiling plan shows actual mechanical and electrical access panels, grill opening locations.	___	___	___
7. Structural:			
a. Footing plan revisions noted. Elevation of bottom of footings and type of material (soil).	___	___	___
b. All schedules for footings columns, beams and girders shown as actually constructed.	___	___	___
c. Concrete equipment pads shown in correct location, size and reinforcement.	___	___	___
d. Floor framing plan dimensions, section cuts, expansion joints, construction joints, and floor openings shown correct.	___	___	___
e. Concrete structural details indicate actual steel reinforcement provided.	___	___	___
f. All miscellaneous structural supports for architectural, mechanical & electrical items shown as erected.	___	___	___

Check one of the following:

	YES	NO	N/A
8. Mechanical:			
a. Plumbing layout correct as shown.	___	___	___
b. Riser diagrams correct as shown.	___	___	___
c. Interior roof drain shown in correct locations.	___	___	___
d. Fire sprinkler system installed as shown.	___	___	___
e. Heating and air conditioning layout correct as shown.	___	___	___
f. Equipment connections shown in actual locations.	___	___	___
g. Equipment sizes & data shown on schedules are as installed.	___	___	___
h. Sequence of operations, controls, etc, revised to reflect system installed.	___	___	___
9. Electrical:			
a. Conduit layout for receptacles.	___	___	___
b. All changes to riser and one line diagrams **noted.**	___	___	___
c. Panel board configuration shown correct.	___	___	___
d. Changes in equipment control circuits.	___	___	___
e. Relocations of telephone outlets (paging outlets) and fire detectors shown on plans.	___	___	___
f. Panel board circuit diagrams & schedules revision noted on drawings.	___	___	___
g. Distribution system changes (wire sizes, type & routing) indicated on drawings.	___	___	___
h. Street lighting layout shown as installed.	___	___	___
i. Switchgear configuration changes reflected on drawings.	___	___	___

Check one of the following:

	YES	NO	N/A
10. Cross out such work as "optional requirement", "or equal", etc. and list specifically the items of material provided	___	___	___
11. When catalog cuts, schematic drawings, parts lists, etc. are necessary to supplement marked-up contract drawings, clearly delineate what is actually installed if more than one size or model is illustrated. If more than one size or model is used on the job, indicate locations where each model is used.	___	___	___
12. All executed contract modifications have been incorporated as appropriate.	___	___	___
13. In some cases as-built shop drawings will be required. If required by the contract, the same procedure should be followed for as-built drawings. Note that a complete set of shop drawings are submitted to the user, therefore, shop drawing data must also reflect as-built conditions.	___	___	___

CERTIFICATION OF AS-BUILT CHECKLIST

------ ----------
Date Contractor Quality Control
Manager Signature

PART 2 PRODUCTS (THIS PART NOT USED)

PART 3 EXECUTION (THIS PART NOT USED)

END> -- End of Section --

SECTION 01780A

CLOSEOUT SUBMITTALS
11/99

PART 1 GENERAL

1.1 SUBMITTALS

Government approval is required for submittals with a "G" designation; submittals not having a "G" designation are for information only. When used, a designation following the "G" designation identifies the office that will review the submittal for the Government. The following shall be submitted in accordance with Section 01330 SUBMITTAL PROCEDURES:

SD-02 Shop Drawings

As-Built Drawings

Drawings showing final as-built conditions of the project. The final CADD as-built drawings shall consist of one set of electronic CADD drawing files in the specified format, one set of mylar drawings, 2 sets of blue-line prints of the mylars, and one set of the approved working as-built drawings.

SD-03 Product Data

As-Built Record of Equipment and Materials;

Two copies of the record listing the as-built materials and equipment incorporated into the construction of the project.

Warranty Management Plan;

One set of the warranty management plan containing information relevant to the warranty of materials and equipment incorporated into the construction project, including the starting date of warranty of construction. The Contractor shall furnish with each warranty the name, address, and telephone number of each of the guarantor's representatives nearest to the project location.

Warranty Tags;

Two record copies of the warranty tags showing the layout and design.

Final Cleaning;

Two copies of the listing of completed final clean-up items.

1.2 PROJECT RECORD DOCUMENTS

1.2.1 As-Built Drawings

This paragraph covers as-built drawings complete, as a requirement of the contract. The terms "drawings," "contract drawings," "drawing files,"

"working as-built drawings" and "final as-built drawings" refer to contract drawings which are revised to be used for final as-built drawings.

1.2.1.1 Government Furnished Materials

One set of mylar drawings revised to reflect all bid amendments will be provided by the Government at the preconstruction conference for projects requiring manually prepared as-built drawings.

1.2.1.2 Working As-Built and Final As-Built Drawings

The Contractor shall revise 2 sets of paper drawings by red-line process to show the as-built conditions during the prosecution of the project. These working as-built marked drawings shall be kept current on a weekly basis and at least one set shall be available on the jobsite at all times. Changes from the contract plans which are made in the work or additional information which might be uncovered in the course of construction shall be accurately and neatly recorded as they occur by means of details and notes. Final as-built drawings shall be prepared after the completion of each definable feature of work as listed in the Contractor Quality Control Plan (Foundations, Utilities, Structural Steel, etc., as appropriate for the project). The working as-built marked prints and final as-built drawings will be jointly reviewed for accuracy and completeness by the Contracting Officer and the Contractor prior to submission of each monthly pay estimate. If the Contractor fails to maintain the working and final as-built drawings as specified herein, the Contracting Officer will deduct from the monthly progress payment an amount representing the estimated cost of maintaining the as-built drawings. This monthly deduction will continue until an agreement can be reached between the Contracting Officer and the Contractor regarding the accuracy and completeness of updated drawings. The working and final as-built drawings shall show, but shall not be limited to, the following information:

a. The actual location, kinds and sizes of all sub-surface utility lines. In order that the location of these lines and appurtenances may be determined in the event the surface openings or indicators become covered over or obscured, the as-built drawings shall show, by offset dimensions to two permanently fixed surface features, the end of each run including each change in direction. Valves, splice boxes and similar appurtenances shall be located by dimensioning along the utility run from a reference point. The average depth below the surface of each run shall also be recorded.

b. The location and dimensions of any changes within the building structure.

c. Correct grade, elevations, cross section, or alignment of roads, earthwork, structures or utilities if any changes were made from contract plans.

d. Changes in details of design or additional information obtained from working drawings specified to be prepared and/or furnished by the Contractor; including but not limited to fabrication, erection, installation plans and placing details, pipe sizes, insulation material, dimensions of equipment foundations, etc.

e. The topography, invert elevations and grades of drainage installed or affected as part of the project construction.

f. Changes or modifications which result from the final inspection.

g. Where contract drawings or specifications present options, only the option selected for construction shall be shown on the final as-built prints.

h. If borrow material for this project is from sources on Government property, or if Government property is used as a spoil area, the Contractor shall furnish a contour map of the final borrow pit/spoil area elevations.

i. Systems designed or enhanced by the Contractor, such as HVAC controls, fire alarm, fire sprinkler, and irrigation systems.

j. Modifications (change order price shall include the Contractor's cost to change working and final as-built drawings to reflect modifications) and compliance with the following procedures.

(1) Directions in the modification for posting descriptive changes shall be followed.

(2) A Modification Circle shall be placed at the location of each deletion.

(3) For new details or sections which are added to a drawing, a Modification Circle shall be placed by the detail or section title.

(4) For minor changes, a Modification Circle shall be placed by the area changed on the drawing (each location).

(5) For major changes to a drawing, a Modification Circle shall be placed by the title of the affected plan, section, or detail at each location.

(6) For changes to schedules or drawings, a Modification Circle shall be placed either by the schedule heading or by the change in the schedule.

(7) The Modification Circle size shall be 1/2 inch diameter unless the area where the circle is to be placed is crowded. Smaller size circle shall be used for crowded areas.

1.2.1.3 Drawing Preparation

The as-built drawings shall be modified as may be necessary to correctly show the features of the project as it has been constructed by bringing the contract set into agreement with approved working as-built prints, and adding such additional drawings as may be necessary. These working as-built marked prints shall be neat, legible and accurate. These drawings are part of the permanent records of this project and shall be returned to the Contracting Officer after approval by the Government. Any drawings damaged or lost by the Contractor shall be satisfactorily replaced by the Contractor at no expense to the Government.

1.2.1.4 Computer Aided Design and Drafting (CADD) Drawings

Only personnel proficient in the preparation of CADD drawings shall be employed to modify the contract drawings or prepare additional new

drawings. Additions and corrections to the contract drawings shall be equal in quality and detail to that of the originals. Line colors, line weights, lettering, layering conventions, and symbols shall be the same as the original line colors, line weights, lettering, layering conventions, and symbols. If additional drawings are required, they shall be prepared using the specified electronic file format applying the same graphic standards specified for original drawings. The title block and drawing border to be used for any new final as-built drawings shall be identical to that used on the contract drawings. Additions and corrections to the contract drawings shall be accomplished using CADD files. The Contractor shall be responsible for providing all program files and hardware necessary to prepare final as-built drawings. The Contracting Officer will review final as-built drawings for accuracy and the Contractor shall make required corrections, changes, additions, and deletions.

a. CADD colors shall be the "base" colors of red, green, and blue. Color code for changes shall be as follows:

   (1) Deletions (red) - Deleted graphic items (lines) shall be colored red with red lettering in notes and leaders.

   (2) Additions (Green) - Added items shall be drawn in green with green lettering in notes and leaders.

   (3) Special (Blue) - Items requiring special information, coordination, or special detailing or detailing notes shall be in blue.

b. The Contract Drawing files shall be renamed in a manner related to the contract number (i.e., 98-C-10.DGN) as instructed in the Pre-Construction conference. Marked-up changes shall be made only to those renamed files. All changes shall be made on the layer/level as the original item. There shall be no deletions of existing lines; existing lines shall be over struck in red. Additions shall be in green with line weights the same as the drawing. Special notes shall be in blue on layer #63.

c. When final revisions have been completed, the cover sheet drawing shall show the wording "RECORD DRAWING AS-BUILT" followed by the name of the Contractor in letters at least 3/16 inch high. All other contract drawings shall be marked either "AS-Built" drawing denoting no revisions on the sheet or "Revised As-Built" denoting one or more revisions. Original contract drawings shall be dated in the revision block.

d. Within 10 days for contracts less than $5 million or 20 days for contracts $5 million and above after Government approval of all of the working as-built drawings for a phase of work, the Contractor shall prepare the final CADD as-built drawings for that phase of work and submit two sets of blue-lined prints of these drawings for Government review and approval. The Government will promptly return one set of prints annotated with any necessary corrections. Within 7 days for contracts less than $5 million or 10 days for contracts $5 million and above the Contractor shall revise the CADD files accordingly at no additional cost and submit one set of final prints for the completed phase of work to the Government. Within 10 days for contracts less than $5 million 20 days for contracts $5 million and above of substantial completion of all phases of work, the Contractor shall submit the final as-built

drawing package for the entire project. The submittal shall consist of one set of electronic files on compact disc, read-only memory (CD-ROM), one set of mylars, two sets of blue-line prints and one set of the approved working as-built drawings. They shall be complete in all details and identical in form and function to the contract drawing files supplied by the Government. Any transactions or adjustments necessary to accomplish this is the responsibility of the Contractor. The Government reserves the right to reject any drawing files it deems incompatible with the customer's CADD system. Paper prints, drawing files and storage media submitted will become the property of the Government upon final approval. Failure to submit final as-built drawing files and marked prints as specified shall be cause for withholding any payment due the Contractor under this contract. Approval and acceptance of final as-built drawings shall be accomplished before final payment is made to the Contractor.

1.2.1.5 Payment

No separate payment will be made for as-built drawings required under this contract, and all costs accrued in connection with such drawings shall be considered a subsidiary obligation of the Contractor.

1.2.2 As-Built Record of Equipment and Materials

The Contractor shall furnish one copy of preliminary record of equipment and materials used on the project 15 days prior to final inspection. This preliminary submittal will be reviewed and returned 2 days after final inspection with Government comments. Two sets of final record of equipment and materials shall be submitted 10 days after final inspection. The designations shall be keyed to the related area depicted on the contract drawings. The record shall list the following data:

RECORD OF DESIGNATED EQUIPMENT AND MATERIALS DATA

Description	Specification Section	Manufacturer and Catalog, Model, and Serial Number	Composition and Size	Where Used

1.2.3 Final Approved Shop Drawings

The Contractor shall furnish final approved project shop drawings 30 days after transfer of the completed facility.

1.2.4 Construction Contract Specifications

The Contractor shall furnish final as-built construction contract specifications, including modifications thereto, 30 days after transfer of the completed facility.

1.2.5 Real Property Equipment

The Contractor shall furnish a list of installed equipment furnished under this contract. The list shall include all information usually listed on manufacturer's name plate. The "EQUIPMENT-IN-PLACE LIST" shall include, as applicable, the following for each piece of equipment installed: description of item, location (by room number), model number, serial number, capacity, name and address of manufacturer, name and address of

equipment supplier, condition, spare parts list, manufacturer's catalog, and warranty. A draft list shall be furnished at time of transfer. The final list shall be furnished 30 days after transfer of the completed facility.

1.2.6 Recording Construction Data

a. During the progress of the work, the Contractor shall keep a careful record at the job site of all changes, corrections, and deviations from the layouts and details shown on the drawings to include all contract modifications. The Contractor shall enter such changes on project drawings promptly, but not later than on a weekly basis.

b. Where underground utilities are installed, note the elevation of the utility installed every 30 feet. Where new utilities cross existing utilities, note the elevation of the new and existing utility and the vertical and/or horizontal separation. Where new utilities run parallel to new and existing utilities, note the elevation at which installed and the horizontal and/or vertical separation between utilities.

(1) GIS Data: The Contractor shall use conventional surveying and other methods, such as a total station or Global Positioning Systems (GPS) for collection of as-built information at an accuracy level in accordance with "Geospatial Positioning Accuracy Standards, Part 3: National Standard for Spatial Data Accuracy," published by the Federal Geographic Data Committee (FGDC), dated July 1998. This document can be found at http://www.fgdc.gov/standards/status/sub1_3.html. All Survey data collected shall be provided to the Government in a digital format with an attached Survey Report identifying survey method, equipment list, calibration documentation, survey layout, description of control points, control diagrams, and field survey data. A Survey Control Database (consisting of a survey marker database and a survey traverse database) will be produced for all survey control points established under this contract, and delivered in a .dbf or ASCII comma-delimited format. If GPS is used, the contractor shall use survey grade GPS, at an accuracy level of +/- 2cm., when appropriate, to collect data to be overlaid onto the installation's orthophotograph and/or base map.

(2) All locational feature data (points, lines, polygons) collected shall be delivered in Arc/Info format along with the original source files. The Geospatial files shall have an external spatial reference file (.prj) attached specifying the parameters of the coordinate system used (as provided by the government). All topologically correct geospatial data shall overlay on the installations latest orthorectified imagery provided by the government. All accuracy errors shall be reported to the contract project manager.

(3) Feature Attributes: The contractor shall identify the classification, type, size, location, ID number, and any other necessary attributes (specified by the Government) for all surveyed, mapped, designed, or proposed features. All symbol libraries, font libraries, text sizes, text formats, and text placements should be prepared in accordance with the SDS where

practical. The contractor shall not develop new libraries without prior written approval from the Government.

(4) All graphic and non-graphic data will be collected in the format defined by the CADD/GIS Technology Center's Spatial Data Standards (SDS) release 2.0 (or the most current version available), except where modified by the Government. This document can be found at http://tsc.wes.army.mil/products/tssds-tsfms/tssds/projects/sds/.

(5) The Contractor shall provide metadata files for all locational data produced under this contract. The metadata file shall conform to the Federal Geographic Data Committee's "Content Standard for Digital Geospatial Metadata, Version 2.0" (or latest version) found at http://www.fgdc.gov/metadata/contstan.html. The output from metadata generator software shall be the standard format for all metadata files created under this contract. In addition, the metadata data shall be provided in ASCII text format. The digital metadata files shall be provided to the Government along with each product deliverable, unless otherwise approved in writing by the Government.

(6) The Government will provide the contractor with data and information concerning all necessary and pertinent functions and principal features of the identified project. These items will include:

(a) The installation's latest georeferenced digital planimetric data and/or base map in ESRI Arc/Info format, or best format available, with associated data files.

(b) The installation's latest orthorectified imagery and specified geospatial parameters (coordinate system, datum, projection, distance units).

(c) Any pertinent and necessary prototype or seed files.

(d) A copy of CADD/GIS Technology Center's Spatial Data Standards (SDS) release 1.95 (or latest version) on CD-ROM.

(e) A copy of "Geospatial Positioning Accuracy Standards, Part 3: National Standard for Spatial Data Accuracy," published by the Federal Geographic Data Committee (FGDC) in Adobe Acrobat Reader (.pdf) format.

(f) Frequency settings for the Real-Time Kinematic (RTK) GPS Base Station and the preferred GPS receiver specifications.

(g) Any other data or schematics deemed necessary for project completion, pending approval from the Government.

c. At the time of beneficial occupancy, the Contractor shall submit as-built data to the Contracting Officer, or his/her designated representative incorporating the aforementioned information into the project drawings. The Contractor shall also ensure a copy of all as-built data is delivered to the Base GeoBase office. The as-built deliverable (plans, shop drawings, surveys, studies, imagery, designs, manuals, spare parts lists, etc.) shall be in a digital (electronic information) format and shall be delivered on

standard compact disks (minimum 650 megabytes) in a format that is directly compatible with the CADD/GIS Technology Center's Spatial Data Standards version 2.0 (or latest version available). No "red-line" or marked-up drawings will be accepted.

1.3 WARRANTY MANAGEMENT

1.3.1 Warranty Management Plan

At least 30 days before the planned pre-warranty conference, the Contractor shall submit the warranty management plan for Government approval. The warranty management plan shall include all required actions and documents to assure that the Government receives all warranties to which it is entitled. The plan shall be in narrative form and contain sufficient detail to render it suitable for use by future maintenance and repair personnel, whether tradesmen, or of engineering background, not necessarily familiar with this contract. The term "status" as indicated below shall include due date and whether item has been submitted or was accomplished. Warranty information made available during the construction phase shall be submitted to the Contracting Officer for approval prior to each monthly pay estimate. Approved information shall be assembled in a binder and shall be turned over to the Government upon acceptance of the work. The construction warranty period shall begin on the date of project acceptance and shall continue for the full product warranty period. A joint 4 month and 9 month warranty inspection shall be conducted, measured from time of acceptance, by the Contractor, Contracting Officer and the Customer Representative. Information contained in the warranty management plan shall include, but shall not be limited to, the following:

a. Roles and responsibilities of all personnel associated with the warranty process, including points of contact and telephone numbers within the organizations of the Contractors, subcontractors, manufacturers or suppliers involved.

b. Listing and status of delivery of all Certificates of Warranty for extended warranty items, to include roofs, HVAC balancing, pumps, motors, transformers, and for all commissioned systems such as fire protection and alarm systems, sprinkler systems, lightning protection systems, etc.

c. A list for each warranted equipment, item, feature of construction or system indicating:

1. Name of item.
2. Model and serial numbers.
3. Location where installed.
4. Name and phone numbers of manufacturers or suppliers.
5. Names, addresses and telephone numbers of sources of spare parts.
6. Warranties and terms of warranty. This shall include one-year overall warranty of construction. Items which have extended warranties shall be indicated with separate warranty expiration dates.
7. Cross-reference to warranty certificates as applicable.
8. Starting point and duration of warranty period.
9. Summary of maintenance procedures required to continue the warranty in force.
10. Cross-reference to specific pertinent Operation and

Maintenance manuals.
11. Organization, names and phone numbers of persons to call for warranty service.
12. Typical response time and repair time expected for various warranted equipment.

d. The Contractor's plans for attendance at the 4 and 9 month post-construction warranty inspections conducted by the Government.

e. Procedure and status of tagging of all equipment covered by extended warranties.

f. Copies of instructions to be posted near selected pieces of equipment where operation is critical for warranty and/or safety reasons.

1.3.2 Performance Bond

The Contractor's Performance Bond shall remain effective throughout the construction period.

a. In the event the Contractor fails to commence and diligently pursue any construction warranty work required, the Contracting Officer will have the work performed by others, and after completion of the work, will charge the remaining construction warranty funds of expenses incurred by the Government while performing the work, including, but not limited to administrative expenses.

b. In the event sufficient funds are not available to cover the construction warranty work performed by the Government at the Contractor's expense, the Contracting Officer will have the right to recoup expenses from the bonding company.

c. Following oral or written notification of required construction warranty repair work, the Contractor shall respond in a timely manner. Written verification will follow oral instructions. Failure of the Contractor to respond will be cause for the Contracting Officer to proceed against the Contractor.

1.3.3 Pre-Warranty Conference

Prior to contract completion, and at a time designated by the Contracting Officer, the Contractor shall meet with the Contracting Officer to develop a mutual understanding with respect to the requirements of this section. Communication procedures for Contractor notification of construction warranty defects, priorities with respect to the type of defect, reasonable time required for Contractor response, and other details deemed necessary by the Contracting Officer for the execution of the construction warranty shall be established/reviewed at this meeting. In connection with these requirements and at the time of the Contractor's quality control completion inspection, the Contractor shall furnish the name, telephone number and address of a licensed and bonded company which is authorized to initiate and pursue construction warranty work action on behalf of the Contractor. This point of contact will be located within the local service area of the warranted construction, shall be continuously available, and shall be responsive to Government inquiry on warranty work action and status. This requirement does not relieve the Contractor of any of its responsibilities in connection with other portions of this provision.

1.3.4 Contractor's Response to Construction Warranty Service Requirements

Following oral or written notification by the Contracting Officer, the Contractor shall respond to construction warranty service requirements in accordance with the "Construction Warranty Service Priority List" and the three categories of priorities listed below. The Contractor shall submit a report on any warranty item that has been repaired during the warranty period. The report shall include the cause of the problem, date reported, corrective action taken, and when the repair was completed. If the Contractor does not perform the construction warranty within the timeframes specified, the Government will perform the work and backcharge the construction warranty payment item established.

a. First Priority Code 1. Perform onsite inspection to evaluate situation, and determine course of action within 4 hours, initiate work within 6 hours and work continuously to completion or relief.

b. Second Priority Code 2. Perform onsite inspection to evaluate situation, and determine course of action within 8 hours, initiate work within 24 hours and work continuously to completion or relief.

c. Third Priority Code 3. All other work to be initiated within 3 work days and work continuously to completion or relief.

d. The "Construction Warranty Service Priority List" is as follows:

Code 1-Air Conditioning Systems

(1) Air conditioning system not cooling properly.

Code 1-Doors

(1) Interior, exterior personnel doors or hardware, not functioning properly, causing a security, fire, or safety problem.

Code 3-Doors

(1) Interior/exterior personnel doors or hardware not functioning properly.

Code 1-Electrical

(1) Power failure (entire area or any building operational after 1600 hours).

Code 1-Heat

(1) Area power failure affecting heat.

(2) Heater in unit not working.

Code 1-Plumbing

(1) Leaking water supply pipes.

Code 1-Roof Leaks

Temporary repairs will be made where major damage to property is

occurring.

Code 2-Roof Leaks

Where major damage to property is not occurring, check for location of leak during rain and complete repairs on a Code 2 basis.

Code 2-Water (Exterior)

No water to facility.

Code 3-All other work not listed above.

1.3.5 Warranty Tags

At the time of installation, each warranted item shall be tagged with a durable, oil and water resistant tag approved by the Contracting Officer. Each tag shall be attached with a copper wire and shall be sprayed with a silicone waterproof coating. The date of acceptance and the QC signature shall remain blank until project is accepted for beneficial occupancy. The tag shall show the following information.

a. Type of product/material_____.

b. Model number_____.

c. Serial number_____.

d. Contract number_____.

e. Warranty period_____from_____to_____.

f. Inspector's signature_____.

g. Construction Contractor_____.

Address_____.

Telephone number_____.

h. Warranty contact_____.

Address_____.

Telephone number_____.

i. Warranty response time priority code_____.

j. WARNING - PROJECT PERSONNEL TO PERFORM ONLY OPERATIONAL MAINTENANCE DURING THE WARRANTY PERIOD.

1.4 MECHANICAL TESTING, ADJUSTING, BALANCING, AND COMMISSIONING

Prior to final inspection and transfer of the completed facility; all reports, statements, certificates, and completed checklists for testing, adjusting, balancing, and commissioning of mechanical systems shall be submitted to and approved by the Contracting Officer as specified in applicable technical specification sections.

1.5 OPERATION AND MAINTENANCE MANUALS

Operation manuals and maintenance manuals shall be submitted as specified. Operation manuals and maintenance manuals provided in a common volume shall be clearly differentiated and shall be separately indexed.

1.6 FINAL CLEANING

Equipment and fixtures shall be cleaned to a sanitary condition. Filters of operating equipment shall be replaced. Debris shall be removed from roofs, drainage systems, gutters, and downspouts. Paved areas shall be swept and landscaped areas shall be raked clean. The site shall have waste, surplus materials, and rubbish removed. The project area shall have temporary structures, barricades, project signs, and construction facilities removed. A list of completed clean-up items shall be submitted on the day of final inspection.

PART 2 PRODUCTS (NOT USED)

PART 3 EXECUTION (NOT USED)

-- End of Section --

SECTION 01850

CONTRACT DRAWINGS
03/98

NORFOLK DISTRICT

FILE NUMBER	REVISION	TITLE
G-001	-	TITLE SHEET
G-002	-	INDEX OF DRAWINGS AND ABBREVIATIONS
C-001	-	KEY TO SHEETS
C-002	-	SITE PLAN
C-003	-	SITE PLAN
C-004	-	SITE PLAN
C-005	-	SITE PLAN
C-006	-	SITE PLAN
C-007	-	SITE PLAN
C-008	-	SITE PLAN
C-009	-	SITE PLAN
C-010	-	SITE PLAN
C-011	-	SITE PLAN
C-012	-	STORM SEWER PROFILES
C-013	-	STORM SEWER PROFILES
C-014	-	STORM SEWER PROFILES
C-015	-	STORM SEWER PROFILES
C-016	-	STORM SEWER PROFILES
C-017	-	EXISTING STORM SEWER STRUCTURE DESCRIPTIONS
C-018	-	EXISTING SANITARY/FOAM SEWER STRUCTURE DESCRIPTIONS
C-019	-	PROPOSED DRAINAGE STRUCTURE DESCRIPTIONS
C-020	-	GENERAL NOTES AND TYPICAL DETAILS
C-021	-	GENERAL NOTES AND TYPICAL DETAILS
C-022	-	PUMP STATION SITE AND EROSION CONTROL PLAN AND TYPICAL DETAILS
C-023	-	EROSION AND SEDIMENT CONTROL PLANS
C-024	-	EROSION AND SEDIMENT CONTROL PLANS
C-025	-	EROSION AND SEDIMENT CONTROL PLANS
C-026	-	EROSION AND SEDIMENT CONTROL PLANS
C-027	-	MAINTENANCE OR TRAFFIC
C-028	-	MAINTENANCE OR TRAFFIC
C-029	-	UTILITY ADJUSTMENT SHEET
C-030	-	UTILITY ADJUSTMENT SHEET
C-031	-	UTILITY ADJUSTMENT SHEET
A-101	-	PUMP & ELECTRICAL ROOM FLOOR PLANS, ELEVATIONS & DOOR SCHEDULE
A-102	-	PUMP & ELECTRICAL ROOM ROOF PLAN, SECTIONS & DETAILS
S-001	-	GENERAL NOTES
S-002	-	BASE SLAB PIER PLAN & DETAILS
S-101	-	PUMP STATION/OUTFALL STRUCTURE PLAN
S-201	-	BUILDING SECTIONS & ELEVATIONS
S-301	-	BUILDING SECTIONS
S-302	-	GENERATOR FRAME SECTIONS, DETAILS & ELEVATIONS
M-101	-	MECHANICAL PLAN

P-101	-	PLUMBING PLAN & ELEVATIONS
E-001	-	ELECTRICAL LEGEND, GENERAL NOTES AND DETAILS
E-002	-	ELECTRICAL DETAILS AND SEQUENCE OF OPERATION
E-003	-	ELECTRICAL GROUNDING AND LIGHTNING PROTECTION PLAN
E-004	-	ELECTRICAL SITE POWER PLAN
E-005	-	ELECTRICAL SITE UTILITY PLAN
E-100	-	ELECTRICAL LIGHTING AND FIRE ALARM PLAN
E-101	-	ELECTRICAL POWER PLAN
E-200	-	ELECTRICAL ROOM ELEVATIONS
E-600	-	ONE-LINE DIAGRAM AND SCHEDULE

-- End of Section --

SECTION 02072
EXCAVATION OF PETROLEUM CONTAMINATED SOIL

03/98

PART 1 GENERAL

1.1 REFERENCES

The publications listed below form a part of this section to the extent referenced. The publications are referenced in the text by basic designation only.

AMERICAN SOCIETY FOR TESTING AND MATERIALS (ASTM

ASTM D 1556	(1990) Density of Soil in Place by the Sand-Cone Method
ASTM D 1557	(1978; R 1990) Moisture-Density Relations of Soils and Soil-Aggregate Mixtures Using 10-lb (4.54-kg) Rammer and 18-inch (457-mm) Drop
ASTM D 2167	(1984; R 1990) Density and Unit Weight of Soil in Place by Rubber Balloon Method
ASTM D 2487	(1990) Classification of Soils for Engineering Purposes
ASTM D 2922	(1981; R 1990) Density of Soil and Soil-Aggregate in Place by Nuclear Methods (Shallow Depth)
ASTM D 3017	(1988) Water Content of Soil and Rock in Place by Nuclear Methods (Shallow Depth)

CODE OF FEDERAL REGULATIONS (CFR)

CFR 29 Part 1910.120	Hazardous Waste Operations and Emergency Response
CFR 40 Part 262	Standards Applicable to Generators of Hazardous Waste
CFR 40 Part 263	Standards Applicable to Transporters of Hazardous Waste
40 CFR 401	Effluent Guidelines and Standards
40 CFR 403	General Pretreatment Regulations for Existing and New sources of Pollution
49 CFR 178	Specifications for Packaging

ENVIRONMENTAL PROTECTION AGENCY (EPA)

EPA SW-846	(Nov 1986, 3rd Ed) Test Methods for Evaluating Solid Waste (Vol IA, IB, IC, and

II)

U.S. ARMY CORPS OF ENGINEERS (COE)

ER 1110-1-263	Chemical Data Quality Management for Hazardous Waste Remedial Activities
ER 385-1-92	Safety and Occupational Health Document Requirements for Hazardous, Toxic, and Radioactive Waste (HTRW) Activities
EM 385-1-1	(1996) Safety and Health Requirements Manual
EM 200-1-1	(1994) Validation of Analytical Chemistry Laboratories
EM 200-1-3	(Sep 94) Requirements for the Preparation of Sampling and Analysis Plans
EM 200-1-6	(1997) Chemical Quality Assurance

COMMONWEALTH OF VIRGINIA DEPARTMENT OF ENVIRONMENTAL QUALITY

9VAC 20-60	Hazardous Waste Management Regulations
9VAC 20-80	Solid Waste Management Regulations
9VAC 20-110	Regulations Governing the Transportation of Hazardous Materials
9VAC 25-260	Virginia Water Quality Standards

1.2 PAYMENT

1.2.1 Payment

Compensation for work covered by this section will be in accordance with the bid schedule.

1.3 SUBMITTALS

The following shall be submitted in accordance with Section 01300 SUBMITTAL PROCEDURES:

SD-01 Data

Work Plan; GA

The Contractor shall develop, implement, maintain, and supervise as part of the work, a comprehensive plan for contaminated soil removal, stockpiling, testing, treatment & disposal, and related operations. The Work Plan shall demonstrate compliance with the contract clauses, referenced standards, this specification, ER 1110-1-263, ER 385-1-92, EM 385-1-1, 9VAC 20-60, 9VAC 20-80, 9VAC 20-110, 9VAC 25-260, and CFR 29 Part 1910.120. No work at the site, with the exception of site inspections and mobilization, shall be performed until the plan is approved. At a minimum the Work Plan shall

include:

a. Scheduling and operational sequencing.

b. Description of the excavation, screening for contamination, stockpiling, and disposal procedures.

c. A Sampling and Analysis Plan, in accordance with ER 1110-1-263, EM 200-1-1, EM 200-1-3, and EM 200-1-6 which describe sampling procedures and lists analysis parameters, methods, laboratory or laboratories and:

d. Field screening and sampling methods and quality control procedures.

e. Identification of applicable regulatory requirements and permits.

f. Methods to be employed for contaminated water removal, storage, and methods proposed for control of surface water.

g. Identification of waste and contaminated soil transporters and means of transportation and a copy of all State and/or Federal License for hauling .

h. Disposal facilities and alternate disposal facilities and means of disposal or remediation and a copy of all State and/or Federal Permits for treatment and disposal of waste and contaminated soil.

i. Borrow source.

j. Spill prevention plan.

k. Spill contingency plan.

l. Decontamination procedures.

m. Methods of measuring volume of contaminated soil and water for disposal.

n. A statement of agreement from the transporter, treatment, storage, and disposal facility operators to accept the specific waste from this work.

SD-08 Statements

Qualifications; GA.

A statement demonstrating that the Contractor meets the requirements in paragraph QUALIFICATIONS. Include owner, owner point of contact with phone number, location of work site, and dates of previous projects.

SD-09 Reports

Test Reports; FIO.

Test results for the fill material, underlying soil, and discharged water. The reports shall include the chain-of-custody records.

SD-18 Records

Shipping Manifest; FIO.

Manifest in accordance with CFR 40 Part 262 Section 23, and CFR 40 PART 263 and 9VAC 20-60 and 9VAC 20-110.

Site Health and Safety Plan GA

There is potential for workers at the site to be exposed to petroleum constituents during excavation and handling. Pursuant to regulations issued by CFR 29 Part 1910.120, the Contractor shall take appropriate measures to safeguard the health of workers at the site. Such measures include apprising workers of the nature of the contaminants at the site, ensuring workers have appropriate training for working at contaminated sites, and preparing and conducting work in accordance with a site specific health and safety plan. The Contractor shall prepare a health and safety plan, in accordance withCFR 29 Part 1910.120, EM 385-1-1, and ER 385-1-92, which addresses all aspects of worker notification, training, exposure, protective equipment, and other protection at the site.

Permits; FIO.

Provide copies of permits for disposal of wastes.

1.4 QUALIFICATIONS

The Contractor shall have a minimum of two years experience in the removal and disposal of petroleum contaminated soil.

1.5 NOTIFICATION

The Contractor shall notify the Contracting Officer (CO) immediately after a suspected contaminant beyond that indicated is encountered.

PART 2 PRODUCTS

2.1 BACKFILL MATERIAL

Backfill material shall be as specified in Section 02222 Excavation, trenching and Backfilling For Utilities Systems. Backfill material shall be obtained from off-site. Backfill shall be classified in accordance with ASTM D 2487 as GW, GP, GM, GC, SW, SP or SM and shall be free from roots and other organic matter, trash, debris, snow, ice or frozen materials. Soils classified as SC and MH shall be considered cohesive for density testing purposes. If off-site materials are used, soil classification test results shall be approved prior to bringing material onsite. Non-contaminated material removed from the excavation can be used for backfill in accordance with paragraph BACKFILLING, if it meets the soils classifications listed above.

2.2 CONTAINER FOR HAZARDOUS WASTE

Container for hazardous waste shall comply with 49 CFR 178.

PART 3 EXECUTION

3.1 SAFETY

Personnel working inside and in the general vicinity of the excavation shall be trained and thoroughly familiar with the safety precautions, procedures, and equipment required for controlling potential hazards

associated with this work. Personnel shall use proper protection and safety equipment during work in and around the excavation in accordance with the approved Site Health and Safety Plan, and as otherwise specified.

3.2 SOIL EXAMINATION, TESTING, AND ANALYSIS

3.2.1 Soil Examination

The Contractor shall examine the soil within the project site and shall immediately notify the CO of suspected soil contamination beyond that indicated, and all work within the area of suspected contamination shall be stopped as soon as practicable. As soon as practicable is defined as securing and protecting all open trenches and equipment, and providing measures to prevent contamination of other soil or water. The Contractor shall not perform any additional work in the area of suspected contamination, until notified, in writing, by the CO.

3.2.2 Stockpiled Material Sampling

Stockpiled suspected contaminated soil shall be sampled in accordance with 9VAC 20-80, and preserved in accordance with EPA SW-846. For VOC analysis, a minimum of one discrete sample shall be collected from within the stockpile.

3.2.3 Testing and Analysis

Soil samples from the excavation and stockpiled material shall be tested in accordance with EPA SW-846, 9VAC 20-60, and 9VAC 20-80, as modified herein for the following:

a. total petroleum hydrocarbons EPA Method 8015 modified;

b. benzene, ethylbenzene, toluene, xylene (BTEX) EPA Method 5030/8020;

c. toxicity characteristic leaching procedure, and

d. total organic halogens (TOX) EPA method 9020,

e. All additional analyses as may be required by the approved off-site disposal facility.

3.2.4 Test Results

Copies of all test results shall be provided to the CO. The maximum allowable laboratory detection limits shall be in accordance with EM 200-1-3. The testing laboratory and Contractor shall adhere to the quality control program, including spikes, blanks, and duplicates, of 200-1-3. All additional testing required by the disposal or treatment facility shall be at the Contractor's expense.

3.3 EXCAVATION

3.3.1 Open Excavations

Open excavations and stockpile areas shall be secured while awaiting test results. The excavation shall not be backfilled without approval from the CO. The Contractor shall divert surface water around excavations to prevent water from directly entering into the excavation.

3.3.2 Stockpiles

a. Monitoring Excavated Material

Excavation shall be performed in a manner that will limit the amount of potentially contaminated soil that could be mixed with previously uncontaminated soil. Suitable uncontaminated, excavated soil shall be deposited adjacent to the excavation, and shall be used for backfill prior to using borrow material. Continuous monitoring of all excavation work shall be accomplished with an organic vapor analyzer photoionization device or flame ionization detector (OVA/PID/FID) capable of detecting volatile, semi-volatile and organic vapors to a minimum of one part per million (ppm).

b. Stained, Volatile, and/or Odorous Excavated Material

Excavated material which is visibly stained for volatile and semi-volatile hydrocarbons and which has an obvious petroleum odor shall be considered contaminated and shall be stockpiled for sampling in accordance with paragraph STOCKPILED MATERIAL SAMPLING.

c. Stockpiling Contaminated Soil

Contaminated soil shall be placed on an impermeable geomembrane a minimum of 30 mils thick or on two (2) layers each a minimum of 10 mils thick, and covered with a 10 mil sheet of geomembrane. The geomembrane shall be placed such that the stockpiled soil does not come in contact with surface water run-off. The 10 mil geomembrane cover shall prevent rain or surface water from coming into contact with the contaminated soil, as well as limit the escape of the volatile constituents in the stockpile.

3.3.3 Contaminated Water

Water removed from the excavation shall considered contaminated until sampling and testing indicate otherwise. The water shall be contained, stored on-site and analyzed prior to being transported, treated, stored, or disposal. Contaminated water shall be removed and disposed by the Contractor. No Government facilities shall be used for storage or disposal of the waste. The Contractor shall be responsible for obtaining all required permits. The Contractor shall provide approved containers, vehicles, equipment, labor, signs, placards, labels, and manifests necessary for accomplishment of the work, including materials necessary for cleaning up spills that could occur from the excavation operation.

3.3.4 Contaminated Water Disposal

a. Sample and Analysis

Contaminated water shall be analyzed for pH; benzene, ethylbenzene, toluene, and xylene (BTEX); total lead; oil and grease/ hydrocarbons (TPH - 8015 mod). Sampling and analysis shall be performed prior to disposal. Analyses for contaminated water to be taken to an off-site treatment facility shall conform to the requirements of the treatment facility with documentation of all analysis performed furnished to the Contracting Officer in accordance with Paragraph RECORDS. Sampling and analyses of contaminated water and treated water, and the Contractor and laboratory quality assurance program shall be in accordance EPA SW-846 and ER 1110-1-263 EM 200-1-1, em 200-1-3, and EM 200-1-6.

b. Treatment and Disposal

Water that cannot be discharged into the storm water drainage system without causing a violation of 9VAC 25-260 and Section 01560, shall be treated. When the contaminated water is to be treated on site, the proposed treatment shall be included in the Work Plan.

Treatment to reduce concentrations below levels indicated shall be provided.

The Contractor shall transport water from the excavation off Government property, treat it, and discharge it in accordance with 40 CFR 401, 40 CFR 403, 9VAC 20-80, 9VAC 20-60, and 9VAC 25-260.

3.3.5 Discharge of Uncontaminated Water

Water that meets the requirements of 9VAC 25-260 may be discharged into the storm water drainage system at the site.

3.4 BACKFILLING

The excavation shall be backfilled with stockpiled material only after the soil test results have been approved. The excavation shall be dewatered if necessary. Stockpiled material subjected to chemical confirmation testing shall be used as backfill if it is found to conform to the requirements of clean fill per appropriate Commonwealth of Virginia regulations. The excavation shall be backfilled within 48 hours after being directed to do so by the CO. Backfilling shall be in accordance with Section 02222 EXCAVATION, TRENCHING, AND BACKFILLING FOR UTILITIES SYSTEMS. Backfill consisting of clean fill shall be placed in layers with a maximum loose 8 inches, and compacted to 90 percent maximum density for cohesive soils and 95 percent maximum density for cohesionless soils. Density tests shall be performed by an approved commercial testing laboratory or by facilities furnished by the Contractor. A minimum of one density test shall be performed on each lift. Laboratory tests for moisture density relations shall be determined in accordance with ASTM D 1557. A mechanical tamper may be used provided that the results are correlated with those obtained by the referenced tamper. Moisture content shall be determined in accordance with ASTM D 2216, except ASTM D 3017 shall be used in conjunction with nuclear density testing per ASTM D 2922. Field in-place density shall be determined in accordance with ASTM D 1556, ASTM D 2922, or ASTM D 2167.) When ASTM D 2922 is used, the calibration curves shall be checked and adjusted using only the sand cone method as described in ASTM D 1556.

3.5 CONTAMINATED SOIL DISPOSAL GUIDELINES

3.5.1 General

Disposal of soil contaminated with petroleum products shall be in accordance with 9VAC 20-80 and requirements specified herein. Soils with TPH concentrations in excess of 1,500 ppm, with BTEX concentrations in excess of 10 ppm, TOX concentrations in excess of 100 ppm, or soils containing regulated substances at concentrations above regulatory limit, shall be disposed of in hazardous waste landfills which are approved for disposal of such soils.

3.5.2 Transportation of Wastes

Transportation shall comply with the requirements of the Commonwealth of

Virginia. Transportation of hazardous waste or special waste shall comply with 9VAC 20-60 and 9VAC 20-110.

3.5.3 Records

Records shall be maintained of all waste determinations, including appropriate results of analyses performed, substances and sample locations, the time of collection, and other pertinent data as required by CFR 40 Part 262 Subpart D. Transportation, treatment, disposal methods and dates, the quantities of waste, the names and addresses of each transporter and the treatment, storage, and disposal facility shall also be recorded and available for inspection, as well as copies or originals of the following documents:

a. Manifests

b. Waste analyses or waste profile sheets

c. Certifications of final treatment/disposal signed by the responsible disposal facility official

d. Weighing scale receipt corresponding to each manifest
Following contract close out, the records shall become the property of the
Government.

3.5.4 Hazardous/Special Waste Manifests

For hazardous or special waste, the Contractor shall utilize a Commonwealth of Virginia approved manifest system in conformance with 9VAC 20-60 and CFR 40 Part 262 and CFR 40 Part 263 so that the waste can be tracked from generation to ultimate disposal. The Contractor shall prepare the manifests, complete. On the day of shipment, a manifest shall be supplied to the Contracting Officer for review. The CO or his representative will supply the generator number and sign the Generator's Certification if the manifest is accepted. If not acceptable, the Contractor shall make all corrections at no additional cost to the Government.

3.5.5 Documentation of Treatment or Disposal

a. Documentation

The waste shall be taken to a treatment, storage, or disposal facility which complies with 9VAC 20-60, 9VAC 20-80, or 9VAC 20-110. Provide documentation of acceptance of special waste or hazardous waste by the original return copy of the hazardous waste manifest, signed by the owner or operator of a facility legally permitted to treat or dispose of those materials. If the Contractor selects a different facility than is identified in the Work Plan, documentation shall be provided for approval to certify that the facility is authorized and meets the standards specified.

b. Payment

There will be no payment for excavation, transportation, and disposal of contaminated soils for which the transportation, disposal, and weight are not documented by the specified material manifest and corresponding weighing scale receipt and other information specified in paragraph RECORDS.

-- End of Section --

SECTION 02210
GRADING
03/98

PART 1 GENERAL

1.1 REFERENCES

The publications listed below form a part of this specification to the extent referenced. The publications are referred to in the text by basic designation only.

AMERICAN SOCIETY FOR TESTING AND MATERIALS (ASTM)

ASTM D 422	(1963; R 1990) Particle Size Analysis of Soils
ASTM D 1556	(1990) Density and Unit Weight of Soil In-Place by the Sand-Cone Method
ASTM D 1557	(1991) Laboratory Compaction Characteristics of Soil Using Modified Effort (56,000 ft-lbf/cu. ft. (2,700 kN-m/cu.m.))
ASTM D 2216	(1992) Laboratory Determination of Water (Moisture) Content of Soil, Rock, and Soil Aggregate Mixtures
ASTM D 2487	(1990) Classification of Soils for Engineering Purposes
ASTM D 2922	(1991) Density of Soil and Soil-Aggregate in Place by Nuclear Methods (Shallow Depth)
ASTM D 3017	(1988) Water Content of Soil and Rock In-Place by Nuclear Methods (Shallow Depth)
ASTM D 4318	(1984) Liquid Limit, Plastic Limit, and Plasticity Index of Soils

1.2 DEFINITIONS

1.2.1 Satisfactory Materials

Materials classified in ASTM D 2487 as GW, GP, GM, GC, SW, SP, SM, SC, CL, CH, ML, and MH are satisfactory as fill for overlot grading and are satisfactory in-situ.

1.2.2 Unsatisfactory Materials

Materials classified in ASTM D 2487 as Pt, OH, and OL are unsatisfactory in-situ and as fill. Unsatisfactory materials also include those materials containing roots and other organic matter, trash, debris, frozen materials, and stones larger than six inches.

1.2.3 Cohesionless and Cohesive Materials

Cohesive materials include materials classified as GC, SC, ML, CL, MH, and

CH. Cohesionless materials include materials classified in ASTM D 2487 as GW, GP, SW, and SP. Materials classified as GM and SM will be identified as cohesionless only when the fines have a plasticity index of zero.

1.2.4 Degree of Compaction

Degree of compaction is a percentage of the maximum density obtained by the appropriate test procedure presented in ASTM D 1557, abbreviated hereinafter as a percent of laboratory maximum density.

1.2.5 Topsoil

Material obtained from off-site areas and areas indicated on the drawings, suitable for topsoils, is defined in Section 02935 TURF. Testing of all material intended for use as topsoil shall be in accordance with Section 02935.

1.3 SUBSURFACE DATA

Subsurface soil boring logs are attached to Section 01055 SOIL BORING DATA. The subsoil investigation report and samples of materials taken from subsurface investigations may be examined at the Norfolk District. These data represent the best subsurface information available; however, variations may exist in the subsurface between boring locations.

PART 2 PRODUCTS (Not Applicable)

PART 3 EXECUTION

The work conducted under this section shall be coordinated and accomplished in accordance with requirements of Section 02072: EXCAVATION OF PETROLEUM CONTAMINATED SOIL.

3.1 DRAINAGE AND DEWATERING

3.2 Drainage

Surface water shall be directed away from excavation and construction sites so as to prevent erosion and undermining of foundations. Diversion ditches, dikes, and grading shall be provided and maintained as necessary during construction. Excavated slopes and backfill surfaces shall be protected to prevent erosion and sloughing. Excavation shall be performed so that the site and the area immediately surrounding the site and affecting operations at the site shall be continually and effectively drained.

3.3 Dewatering

Groundwater flowing toward or into excavations shall be controlled to prevent sloughing of excavation slopes and walls, boils, uplift and heave in the excavation and to eliminate interference with orderly progress of construction. French drains, sumps, ditches or trenches will not be permitted within 3 feet of the foundation of any structure, except with specific written approval, and after specific contractual provisions for restoration of the foundation area have been made. Control measures shall be taken by the time the excavation reaches the water level in order to maintain the integrity of the in situ material. While the excavation is open, the water level shall be maintained continuously below the working level as required to continue construction.

3.4 STRIPPING OF TOPSOIL

Where indicated, topsoil shall be removed to full depth and shall be stored separate from other excavated materials and piled free of roots, stones, and other undesirable materials. Any surplus of topsoil from excavations and grading shall be removed off Government property.

3.5 EXCAVATION

After topsoil removal has been completed, excavation of every description, regardless of material encountered, within the grading limits of the project shall be performed to the lines and grades indicated. Satisfactory excavation material shall be stockpiled or shall be transported to and placed in fill areas within the limits of the work. All unsatisfactory material, including any soil which is disturbed by the Contractor's operations or softened due to exposure to the elements and water, and surplus material shall be removed from Government property. Unsatisfactory material excavated below the grade shown and replaced with satisfactory material as directed shall be included in the contract unit price for excavation. Excavations carried below the depths indicated, without specific directions, or as required due to the action or inaction of the Contractor during performance of the work, shall, except as otherwise specified, be refilled at the Contractor's expense to the proper grade with satisfactory material as directed. Material required for fills in excess of that produced by excavation within the grading limits shall be obtained from borrow areas.

3.6 CLASSIFICATION OF EXCAVATION

No consideration will be given to the nature of the materials, and all excavation will be designated as unclassified excavation.

3.7 DITCHES AND SWALES

Ditches and swales shall be cut accurately to the cross sections and grades indicated. All roots, stumps, and foreign matter in the sides and bottom of ditches and swales shall be trimmed and dressed or removed to conform to the slope, grade, and shape of the section indicated. Care shall be taken not to excavate ditches and swales below the grades indicated. Excessive ditch and swale excavation shall be backfilled to grade with satisfactory, thoroughly compacted material. All ditches and swales excavated under this section shall be maintained until final acceptance of the work. Satisfactory material excavated from ditches and swales shall be placed in fill areas. Unsatisfactory and excess excavated material shall be disposed of in accordance with directions in paragraph EXCAVATION. No excavated material shall be deposited closer to the edges of the ditches than indicated and in no case less than 3 feet.

3.8 BORROW MATERIAL

Borrow material shall be selected to meet requirements and conditions of the particular fill for which it is to be used. Borrow materials shall be subject to approval. Necessary clearing, grubbing, disposal of debris, and satisfactory drainage of borrow pits shall be performed by the Contractor as incidental operations to the borrow excavation.

3.8.1 Selection

Borrow materials shall be obtained from sources outside the limits of Government-controlled land. The source of borrow material shall be the Contractor's responsibility. Unless otherwise provided in the contract, the Contractor shall obtain from the owners the right to procure material, shall pay all royalties and other charges involved, and shall bear all the expense of developing the sources, including rights-of-way for hauling.

3.9 BACKFILL ADJACENT TO STRUCTURES

Backfill adjacent to structures shall be placed and compacted uniformly in such manner as to prevent wedging action or eccentric loading upon or against the structures. Slopes bounding or within areas to be backfilled shall be stepped or serrated to prevent sliding of the fill. During backfilling operations and in the formation of embankments, equipment that will overload the structure in passing over and compacting these fills shall not be used. Backfill for storm drains and subdrains, including the bedding and backfill for structures other than culverts and drains, shall conform to the additional requirements in other applicable sections.

3.10 PREPARATION OF GROUND SURFACE FOR FILL

All vegetation, such as roots, brush, heavy sods, heavy growth of grass, and all decayed vegetable matter, rubbish, and other unsatisfactory material within the area upon which fill is to be placed, shall be stripped or otherwise removed before the fill is started. In no case shall unsatisfactory material remain in or under the fill area. Sloped ground surfaces steeper than one vertical to four horizontal on which fill is to be placed shall be plowed, stepped, or broken up, as directed, in such manner that the fill material will bond with the existing surface. Prepared surfaces on which compacted fill is to be placed shall be wetted or dried as may be required to obtain the specified compaction. Drying shall include disking, harrowing, mixing, and other methods as may be necessary to achieve the proper moisture content.

3.11 FILLS AND EMBANKMENTS

Fills and embankments shall be constructed at the locations and to lines and grades indicated. The completed fill shall conform to the shape of the typical sections indicated or shall meet the requirements of the particular case. Satisfactory material obtained during excavation may be used in forming required fill. Fill shall be satisfactory material and shall be reasonably free from roots, other organic material, and trash and from stones having a maximum diameter greater than 6 inches. No frozen material will be permitted in the fill. Stones having a dimension greater than 3 inches shall not be permitted in the upper 6 inches of fill or embankment. The material shall be placed in successive horizontal layers of 8 inches in loose depth for the full width of the cross section and shall be compacted as specified. Each layer shall be compacted before the overlaying lift is placed. Moisture content of the fill or backfill material shall be adjusted by wetting or aerating, as necessary to provide the moisture content that will readily facilitate obtaining the specified compaction with the equipment used.

3.12 COMPACTION

Except for paved areas, each layer of the fill or embankment shall be compacted to at least 85 and 90 percent of laboratory maximum density for cohesive and cohesionless materials, respectively. Areas to bepaved and other areas indicated as requiring compaction suitable for paved areas

shall be compacted as specified in Section 02225 EARTHWORK FOR ROADWAYS. In areas to be paved and other areas indicated as requiring compaction suitable for paved areas, the upper 12" of subgrade shall be compacted to at least 90 and 95% of laboratory maximum density for cohesive and cohesionless material, respectively.

3.13 FINISHED EXCAVATION, FILLS, AND EMBANKMENTS

All areas covered by the project, including excavated and filled sections and adjacent transition areas, shall be uniformly smooth-graded. The finished surface shall be reasonably smooth, compacted, and free from irregular surface changes. The degree of finish shall be that ordinarily obtainable from blade-grader operations, except as otherwise specified. Ditches and swales shall be finished to permit adequate drainage. The surface of areas to be turfed shall be finished to a smoothness suitable for the application of turfing materials. For subgrade areas to be paved, the following shall be accomplished as required: (a) soft or otherwise unsatisfactory material shall be replaced with satisfactory excavated material or other approved materials and the entire subgrade shall be shaped to line, grade, and cross section and shall be compacted as specified. The surface of embankments or excavated areas for road construction or other areas on which a base course or pavement is to be placed shall vary not more than 0.05 foot from the established grade and approved cross section. Surfaces other than those that are to be paved shall be finished not more than 0.15 foot above or below the established grade or approved cross section.

3.14 PLACING TOPSOIL

Areas outside the building lines from which topsoil has been removed and areas indicated shall be topsoiled. The surface shall be free of materials that would hinder planting or maintenance operations. The subgrade shall be pulverized to a depth of 2 inches by disking or plowing for the bonding of topsoil with the subsoil. Topsoil shall then be uniformly spread, graded, and compacted as specified in Section 02935 TURF. Topsoil shall not be placed when the subgrade is frozen, excessively wet, extremely dry, or in a condition otherwise detrimental to seeding, planting, or proper grading. Material required for topsoil in excess of that produced by excavation within the grading limits shall be obtained from off Government property.

3.15 SOILS TESTS

Testing shall be the responsibility of the Contractor and shall be performed by an approved commercial testing laboratory or may be performed by the Contractor subject to approval. Laboratory tests for moisture - density relations complete with zero air voids curve, gradation, and Atterberg limits shall be made in accordance with the procedures referenced in ASTM D 1557, ASTM D 422, and ASTM D 4318. Field tests for density and moisture content shall be made in accordance with ASTM D 1556 and ASTM D 2216 except that Method ASTM D 2922 may be used to supplement tests by Method ASTM D 1556. When ASTM D 2922 is used, the calibration curves shall be checked and adjusted using only the sand cone method as described in ASTM D 1556. ASTM D 2922 results in a wet unit weight of soil and when using this method, ASTM D 3017 shall be used to determine the moisture content of the soil. When soil conditions exist which produce inconsistent results by the nuclear gauge method D 2922, only method D 1556 shall be used. Where results by Method D 2922 differ from those by Method D 1556, the results by Method D 1556 shall govern for contract compliance.

The following tests are required:

a. A minimum of one moisture-density test shall be performed for each classification of fill material, backfill material, and existing subgrade material.

b. One Atterberg limits test and one gradation analysis is required for every six field density tests.

c. A minimum of one sand cone density test is required for every six nuclear gauge field density tests or fraction thereof. Worksheets of sand density and sand cone calibration shall be submitted to the Contracting Officer prior to commencing work and each time a new supply of sand is used.

d. A quart jar sample of each moisture-density test material shall be delivered to the Contracting Officer at the time the test is obtained.

e. A pint jar sample of each field density test material shall be delivered to the Contracting Officer at the time the test is obtained.

f. Field density tests shall be performed as follows: a minimum of one test per lift per 1000 square yards or fraction thereof is required for fill material. Locations of all tests shall be at the direction of the Contracting Officer.

3.16 PROTECTION

Newly graded areas shall be protected from traffic and from erosion, and any settlement or washing away that may occur from any cause, prior to acceptance, shall be repaired and grades reestablished to the required elevations and slopes. All work shall be conducted in accordance with the environmental protection requirements of the contract.

-- End of Section --

SECTION 02220A

DEMOLITION
05/01

PART 1 GENERAL

1.1 REFERENCES

The publications listed below form a part of this specification to the extent referenced. The publications are referred to in the text by basic designation only.

U.S. ARMY CORPS OF ENGINEERS (USACE)

EM 385-1-1	(1996) U.S. Army Corps of Engineers Safety and Health Requirements Manual

1.2 GENERAL REQUIREMENTS

The work includes demolition and removal of resulting rubbish and debris. Rubbish and debris shall be removed from Government property daily, unless otherwise directed, to avoid accumulation at the demolition site. Materials that cannot be removed daily shall be stored in areas specified by the Contracting Officer. In the interest of occupational safety and health, the work shall be performed in accordance with EM 385-1-1, Section 23, Demolition, and other applicable Sections.

1.3 SUBMITTALS

Government approval is required for submittals with a "G" designation; submittals not having a "G" designation are for information only. When used, a designation following the "G" designation identifies the office that will review the submittal for the Government. The following shall be submitted in accordance with Section 01330 SUBMITTAL PROCEDURES:

SD-03 Product Data

Work Plan

The procedures proposed for the accomplishment of the work. The procedures shall provide for safe conduct of the work, including procedures and methods to provide necessary supports, lateral bracing and shoring when required, careful removal and disposition of materials specified to be salvaged, protection of property which is to remain undisturbed, coordination with other work in progress, and timely disconnection of utility services. The procedures shall include a detailed description of the methods and equipment to be used for each operation, and the sequence of operations in accordance with EM 385-1-1.

1.4 DUST CONTROL

The amount of dust resulting from demolition shall be controlled to prevent the spread of dust to occupied portions of the construction site and to avoid creation of a nuisance in the surrounding area. Use of water will

not be permitted when it will result in, or create, hazardous or objectionable conditions such as ice, flooding and pollution.

1.5 PROTECTION

1.5.1 Protection of Existing Property

Before beginning any demolition work, the Contractor shall survey the site and examine the drawings and specifications to determine the extent of the work. The Contractor shall take necessary precautions to avoid damage to existing items to remain in place, to be reused, or to remain the property of the Government; any damaged items shall be repaired or replaced as approved by the Contracting Officer. The Contractor shall coordinate the work of this section with all other work and shall construct and maintain shoring, bracing, and supports as required. The Contractor shall ensure that structural elements are not overloaded and shall be responsible for increasing structural supports or adding new supports as may be required as a result of any cutting, removal, or demolition work performed under this contract.

1.5.2 Protection From the Weather

The interior of buildings to remain; salvageable materials and equipment shall be protected from the weather at all times.

1.5.3 Protection of Trees

Trees within the project site which might be damaged during demolition shall be protected by a 6 foot high fence. The fence shall be securely erected a minimum of 5 feet from the trunk of individual trees or follow the outer perimeter of branches or clumps of trees. Any tree that is damaged during the work under this contract shall be replaced in kind or as approved by the Contracting Officer.

1.5.4 Environmental Protection

The work shall comply with the requirements of Section 01355 ENVIRONMENTAL PROTECTION.

1.6 BURNING

The use of burning at the project site for the disposal of refuse and debris will not be permitted.

1.7 USE OF EXPLOSIVES

Use of explosives will not be permitted.

PART 2 PRODUCTS (Not Applicable)

PART 3 EXECUTION

3.1 EXISTING STRUCTURES

Existing structures indicated shall be removed completely unless otherwise noted. Sidewalks, curbs, gutters and street light bases shall be removed as indicated.

3.2 UTILITIES

Disconnection of utility services, with related meters and equipment, are specified in Section 01500. Existing utilities shall be removed as indicated. When utility lines are encountered that are not indicated on the drawings, the Contracting Officer shall be notified prior to further work in that area.

3.3 FILLING

Holes, open basements and other hazardous openings shall be filled in accordance with Section 02221.

3.4 DISPOSITION OF MATERIAL

Title to material and equipment to be demolished is vested in the Contractor upon receipt of notice to proceed. The Government will not be responsible for the condition, loss or damage to such property after notice to proceed.

3.4.1 Unsalvageable Material

Concrete, masonry, and other material, except concrete permitted to remain in place, shall be disposed of off the site.

3.5 CLEAN UP

Debris and rubbish shall be removed from excavations. Debris shall be removed and transported in a manner that prevents spillage on streets or adjacent areas. Local regulations regarding hauling and disposal shall apply.

3.6 PAVEMENTS

Existing pavements designated for removal shall be saw cut and removed in accordance with the details shown on the drawings and to the limits and depths indicated on the drawings.

-- End of Section --

SECTION 02221
EXCAVATION, FILLING AND BACKFILLING FOR BUILDINGS

03/98

PART 1 GENERAL

1.1 REFERENCES

The publications listed below form a part of this specification to the extent referenced. The publications are referred to in the text by basic designation only.

AMERICAN SOCIETY OF TESTING AND MATERIALS (ASTM)

ASTM D 422	(1963; R 1990) Particle Size Analysis of Soils
ASTM D 1556	(1990) Density and Unit Weight of Soil In-Place by the Sand-Cone Method
ASTM D 1557	(1991) Laboratory Compaction Characteristics of Soil Using Modified Effort (56,000 ft-lbf/cu. ft. (2,700 kN-m/cu. m.))
ASTM D 2216	(1992) Laboratory Determination of Water (Moisture) Content of Soil and Rock
ASTM D 2487	(1990) Classification of Soils For Engineering Purposes
ASTM D 2922	(1991) Density of Soil and Soil-Aggregate In-Place by Nuclear Methods (Shallow Depth)
ASTM D 3017	(1988) Water Content of Soil and Rock In-Place by Nuclear Methods (Shallow Depth)
ASTM D 4318	(1984) Liquid Limit, Plastic Limit, and Plasticity Index of Soils

VIRGINIA DEPARTMENT OF TRANSPORTATION (VDOT)

VDOT SPECS	(January 1994) Road and Bridge Specifications

1.2 DEFINITIONS

1.2.1 Satisfactory Materials

Materials classified by ASTM D 2487 as GW, GP, GM, GC, SW, SP, SM, are satisfactory as fill.

1.2.2 Unsatisfactory Materials

Materials classified by ASTM D 2487 as OL, OH and Pt are unsatisfactory in-situ. These materials plus MH, CH, CL and ML are unsatisfactory as fill. Unsatisfactory materials also include those materials containing

roots and other organic matter, trash, debris, frozen materials, stones larger than 3 inches, and material which cannot support equipment or be properly compacted due to excess moisture.

1.2.3 Cohesionless and Cohesive Materials

Cohesionless materials include materials classified in ASTM D 2487 as GW, GP, SW, and SP. Cohesive materials include materials classified as GC, SC, ML, CL, MH, and CH. Materials classified as GM and SM will be identified as cohesionless only when the fines are nonplastic.

1.2.4 Degree of Compaction

Degree of compaction required is expressed as a percentage of the maximum density obtained by the appropriate test procedure presented in ASTM D 1557, abbreviated hereinafter as percent laboratory maximum density.

1.3 SUBMITTALS

Government approval is required for submittals with a "GA" designation; submittals having an "FIO" designation are for information only. The following shall be submitted in accordance with Section 01300 SUBMITTAL DESCRIPTIONS:

SD-09 Reports

Soils Tests; GA.

Copies of all laboratory and field test reports shall be submitted to the Contracting Officer within 72 hours of the completion of the test. Required soils tests for fill, backfill, and subgrade materials shall be submitted prior to beginning fill and backfill operations.

1.4 SUBSURFACE DATA

Subsurface soil boring logs are attached to Section 01055 SOIL BORING DATA. The subsoil investigation report and samples of materials taken from subsurface investigations may be examined at the Norfolk District. These data represent the best subsurface information available; however, variations may exist in the subsurface between locations.

PART 2 PRODUCTS

2.1 CAPILLARY WATER BARRIER

2.1.1 Consistency

Capillary Water Barrier shall consist of clean, crushed, nonporous rock, crushed gravel, or uncrushed gravel. The maximum particle size shall be 1-1/2 inches and no more than 3 percent by weight shall pass the No. 8 size sieve.

2.1.2 Substitution

Coarse aggregate conforming to VDOT SPECS Section No.203, Table II-3, aggregate size No.57 is satisfactory as a capillary water barrier.

PART 3 EXECUTION

The work conducted under this section shall be coordinated and accomplished in accordance with requirements specified in SECTION 02072 EXCAVATION OF PETROLEUM CONTAMINATED SOIL.

3.1 DRAINAGE AND DEWATERING

3.1.1 Drainage

Surface water shall be directed away from excavation and construction sites so as to prevent erosion and undermining of foundations. Diversion ditches, dikes and grading shall be provided and maintained as necessary during construction. Excavated slopes and backfill surfaces shall be protected to prevent erosion and sloughing. Excavation shall be performed so that the site and the area immediately surrounding the site and affecting operations at the site shall be continually and effectively drained.

3.1.2 Dewatering

Groundwater flowing toward or into excavations shall be controlled to prevent sloughing of excavation slopes and walls, boils, uplift and heave in the excavation and to eliminate interference with orderly progress of construction. French drains, sumps, ditches or trenches will not be permitted within 3 feet of the foundation of any structure, except with specific written approval, and after specific contractual provisions for restoration of the foundation area have been made. Control measures shall be taken by the time the excavation reaches the water level in order to maintain the integrity of the in situ material. While the excavation is open, the water level shall be maintained continuously at least 5 feet below the working level, or deeper as required to continue construction.

3.2 CLEARING AND GRUBBING

The areas within lines 5 feet outside of each building and structure line shall be cleared and grubbed of trees, stumps, roots, brush and other vegetation, debris, existing foundations, pavements, utility lines, structures, fences, and other items that would interfere with construction operations. Stumps, logs, roots, and other organic matter shall be completely removed and the resulting depressions shall be filled with satisfactory material, placed and compacted in accordance with paragraph "FILLING AND BACKFILLING." Materials removed shall be disposed of off Government property.

3.3 STRIPPING OF TOPSOIL

Topsoil shall be stripped to full depth below existing grade within the designated excavations and grading lines and deposited in storage piles for later use. Excess topsoil shall be disposed as specified for excess excavated material.

3.4 EXCAVATION

Excavation shall conform to the dimensions and elevations indicated for each building, structure, and footing except as specified hereinafter, and shall include trenching for utility systems to a point 5 feet beyond the building line of each building and structure, and all work incidental thereto. Excavation shall extend a sufficient distance from walls and footings to allow for placing and removal of forms. Excavations below

indicated depths will not be permitted except to remove unsatisfactory material. Unsatisfactory material encountered below the grades shown shall be removed as directed and replaced with satisfactory material. Payment therefor will be made in conformance with the CHANGES clause of the CONTRACT CLAUSES, except for soil which becomes unsatisfactory due to the action or inaction of the Contractor in the performance of his work. Satisfactory material removed below the depths indicated without specific direction of the Contracting Officer shall be replaced at no additional cost to the Government to the indicated excavation grade with satisfactory materials, except that concrete footings shall be increased in thickness to the bottom of the overdepth excavations. Satisfactory material shall be placed and compacted as specified in paragraph "FILLING AND BACKFILLING." Determination of elevations and measurements of approved overdepth excavation of unsatisfactory material below grades indicated shall be done under the direction of the Contracting Officer.

3.5 CLASSIFICATION OF EXCAVATION

No consideration will be given to the nature of the materials, and all excavation will be designated as unclassified excavation.

3.6 SHORING

Shoring, including sheet piling, shall be furnished and installed as necessary to protect workmen, banks, adjacent paving, structures, and utilities. Shoring, bracing, and sheeting shall be removed as excavations are backfilled, in a manner to prevent caving.

3.7 UTILITY AND DRAIN TRENCHES

Trenches for underground utilities systems and drain lines shall be excavated to the required alignments and depths. The bottoms of trenches shall be graded to secure the required slope and shall be tamped if necessary to provide a firm pipe bed. Recesses shall be excavated to accommodate bells and joints so that pipe will be uniformly supported for the entire length.

3.8 BORROW MATERIAL

Borrow materials shall be selected to meet requirements and conditions of the particular fill for which it is to be used. Borrow materials shall be subject to approval. Necessary clearing, grubbing, disposal of debris, and satisfactory drainage of borrow pits shall be performed by the Contractor as incidental operations to the borrow excavation.

3.8.1 Selection

The source of borrow material shall be the Contractor's responsibility. Unless otherwise provided in the contract, the Contractor shall obtain from the owners the right to procure material, shall pay all royalties and other charges involved, and shall bear all the expense of developing the sources, including rights-of-way for hauling.

3.9 EXCAVATED MATERIALS

Satisfactory excavated material required for fill or backfill shall be placed in the proper section of the permanent work required under this section or shall be separately stockpiled if it cannot be readily placed. Satisfactory material in excess of that required for the permanent work and

all unsatisfactory material shall be disposed of off Government property.

3.10 PREPARATION OF SURFACES FOR FILL

Material shall not be placed on surfaces that are muddy, frozen, or contain frost. Compaction shall be accomplished by equipment well suited to the soil being compacted. Material shall be moistened or aerated as necessary to provide the moisture content that will readily facilitate obtaining the specified compaction with the equipment used. Aeration shall include disking, harrowing, mixing, and other methods as may be necessary to achieve the proper moisture content.

3.11 FILLING AND BACKFILLING

Satisfactory materials shall be used in bringing fills and backfills to the lines and grades indicated and for replacing unsatisfactory materials. Materials which are unsatisfactory solely due to excess moisture shall be spread, disked, and aerated prior to placing. Satisfactory materials shall be placed in horizontal layers not exceeding 8 inches in loose thickness, or 6 inches when hand-operated compactors are used. After placing, each layer shall be plowed, disked, or otherwise broken up, moistened or aerated as necessary, thoroughly mixed and compacted as specified. Backfilling shall not begin until construction below finish grade has been approved, underground utilities systems have been inspected, tested and approved, forms removed, and the excavation cleaned of trash and debris. Backfill shall be brought to indicated finish grade. Backfill shall not be placed in wet or frozen areas. Where pipe is coated or wrapped for protection against corrosion, the backfill material up to an elevation 2 feet above sewer lines and 1 foot above other utility lines shall be free from stones larger than 1 inch in any dimension. Heavy equipment for spreading and compacting backfill shall not be operated closer to foundation or retaining walls than a distance equal to the height of backfill above the top of footing; the area remaining shall be compacted in layers not more than 4 inches in compacted thickness with power-driven hand tampers suitable for the material being compacted. Backfill shall be placed carefully around pipes or tanks to avoid damage to coatings, wrappings, or tanks. Backfill shall not be placed against foundation walls prior to 7 days after completion of the walls. As far as practicable, backfill shall be brought up evenly on each side of the wall and sloped to drain away from the wall. Recompaction over underground utilities and heating lines shall be by hand tamping.

3.12 COMPACTION

Each layer of fill, backfill, and prepared subgrade shall be compacted to not less than the percentage of maximum density specified below:

	Percent Laboratory maximum density	
	Cohesive material	Cohesionless material
Fill, subgrade, and backfill		
Under structures, paved areas, around footings, and in trenches	90	95

	Percent Laboratory maximum density	
	Cohesive material	Cohesionless material
Under sidewalks and grassed areas	85	90
Under structures and paved areas, top 6 inches	95	95
Under sidewalks and exterior slabs, top 6 inches	90	95

Compacted surfaces that are disturbed by the Contractor's operations or adverse weather shall be scarified and recompacted as specified at the Contractor's expense prior to further construction thereon.

3.13 FINAL GRADE OF SURFACES TO SUPPORT CONCRETE

Excavation to final grade shall not be made until just before concrete or capillary barrier are to be placed. Structures shall bear on undisturbed natural subgrade or on compacted fill. Subgrade which becomes disturbed below indicated grade shall be overexcavated and backfilled, as directed, with VDOT SPECS Size No. 57 or No. 21A Stone at the Contractor's expense.

3.14 SOILS TESTS

Testing shall be the responsibility of the Contractor and shall be performed by an approved commercial testing laboratory or may be performed by the Contractor subject to approval. Laboratory tests for moisture-density relations complete with zero air voids curve, gradation, and Atterberg limits shall be made in accordance with the procedures referenced in ASTM D 1557, ASTM D 422, and ASTM D 4318. Field tests for density and moisture content shall be made in accordance with ASTM D 1556 and ASTM D 2216 except that method ASTM D 2922 may be used to supplement tests by method ASTM D 1556. When ASTM D 2922 is used, the calibration curves shall be checked and adjusted using only the sand cone method as described in ASTM D 1556. ASTM D 2922 results in a wet unit weight of soil and when using this method, ASTM D 3017 shall be used to determine the moisture content of the soil. When soil conditions exist which produce inconsistent results by the nuclear gauge method D 2922, only method D 1556 shall be used. Where results by Method D 2922 differ from those by Method D 1556, the results by method D 1556 shall govern for contract compliance.

The following tests are required:

a. A minimum of one moisture-density test shall be performed for each classification of fill material, backfill material, and existing subgrade material.

b. One Atterberg limits test and one gradation analysis is required for every six field density tests.

c. A minimum of one sand cone density test is required for every six nuclear gauge field density tests or fraction thereof. Worksheets of sand density and sand cone calibration shall be submitted to the Contracting Officer prior to commencing work and each time a

new supply of sand is used.

d. A quart jar sample of each moisture-density test material shall be delivered to the Contracting Officer at the time the test is obtained.

e. A pint jar sample of each field-density test material shall be delivered to the Contracting Officer at the time the test is obtained.

f. Field density tests shall be performed as follows: A minimum of one test per lift per 100 feet of wall length or fraction thereof and one test per lift for each column footing is required for fill material; a minimum of one test per lift per 350 square yards or fraction thereof is required for fill material and a minimum of one test per 500 square yards or fraction thereof is required for compacted ground surfaces prior to filling. Locations of all tests shall be at the direction of the Contracting Officer.

3.15 CAPILLARY WATER BARRIER

Capillary water barrier under concrete floor and area-way slabs on grade shall be placed directly on the prepared subgrade and shall be compacted with a minimum of two passes of a hand-operated plate-type vibratory compactor.

3.16 GRADING

Areas within 5 feet outside of each building and structure line shall be constructed true-to-grade, shaped to drain, and shall be maintained free of trash and debris until final inspection has been completed and the work has been accepted.

3.17 SPREADING TOPSOIL

Areas outside the building lines from which topsoil has been removed and areas indicated shall be topsoiled. The surface shall be free of materials that would hinder planting or maintenance operations. The subgrade shall be pulverized to a depth of 2 inches by disking or plowing for the bonding of topsoil with the subsoil. Topsoil shall then be uniformly spread, graded, and compacted to the thickness, elevations, slopes shown, and left free of surface irregularities. Topsoil shall be compacted by one pass of a cultipacker, roller, or other approved equipment weighing 100 to 160 pounds per linear foot of roller. Topsoil shall not be placed when the subgrade is frozen, excessively wet, extremely dry, or in a condition otherwise detrimental to seeding, planting, or proper grading.

3.18 PROTECTION

Settlement or washing that occurs in graded, topsoiled, or backfilled areas prior to acceptance of the work shall be repaired and grades reestablished to the required elevations and slopes.

-- End of Section --

SECTION 02222
EXCAVATION, TRENCHING, AND BACKFILLING FOR UTILITIES SYSTEMS

03/98

PART 1 GENERAL

1.1 REFERENCES

The publications listed below form a part of this specification to the extent referenced. The publications are referred to in the text by basic designation only.

AMERICAN SOCIETY OF TESTING AND MATERIALS (ASTM)

ASTM D 422	(1963; R 1990) Particle-Size Analysis of Soils
ASTM D 1556	(1990) Density and Unit Weight of Soil in Place by the Sand-Cone Method
ASTM D 1557	(1991) Laboratory Compaction Characteristics of Soil Using Modified Effort (56,000 ft-lbf/cu.ft. (2,700 kN-m/cu.m.))
ASTM D 2216	(1992) Laboratory Determination of Water (Moisture) Content of Soil and Rock
ASTM D 2487	(1990) Classification of Soils for Engineering Purposes
ASTM D 2922	(1991) Density of Soil and Soil-Aggregate In Place by Nuclear Methods (Shallow Depth)
ASTM D 3017	(1988) Water Content of Soil and Rock In Place by Nuclear Methods (Shallow Depth)
ASTM D 4318	(1984) Liquid Limit, Plastic Limit, and Plasticity Index of Soils

U. S. ARMY, CORPS OF ENGINEERS (COE)

EM 385-1-1	(1996) Safety and Health Requirements Manual

VIRGINIA DEPARTMENT OF TRANSPORTATION

VDOT	(2002) Road and Bridge Specifications, and All Supplements Thereto

1.2 DEFINITIONS

1.2.1 Satisfactory Materials

Materials classified by ASTM D 2487 as GW, GP, GM, GC, SW, SP, SM, SC, SM-SC are satisfactory in-situ and as final backfill. Satisfactory initial backfill material is as specified in Part 2 - PRODUCTS.

1.2.2 Unsatisfactory Materials

Materials classified by ASTM D 2487 as OL, OH, and Pt are unsatisfactory in-situ and as any kind of fill. Materials classified as MH, CH, CL, and ML are unsatisfactory as final backfill beneath pavement cuts. Unsatisfactory materials also include those materials containing roots and other organic matter, trash, debris, frozen materials, and stones larger than 3 inches.

1.2.3 Cohesionless and Cohesive Materials

Cohesionless materials shall include materials classified in ASTM D 2487 as GW, GP, SW, and SP. Cohesive materials include materials classified as GC, SC, ML, CL, MH, and CH. Materials classified as GM and SM will be identified as cohesionless only when the fines are nonplastic.

1.2.4 Unstable Material

Unstable material shall consist of materials too wet to properly support the utility pipe, conduit, or appurtenant structure.

1.2.5 Degree of Compaction

Degree of compaction shall be expressed as a percentage of the maximum density obtained by the appropriate procedure presented in ASTM D 1557, abbreviated hereinafter as percent maximum density.

1.3 SUBSURFACE DATA

Subsurface soil boring logs are attached to Section 01055 SOIL BORING DATA. The subsoil investigation report and samples of materials taken from subsurface investigations may be examined at the Norfolk District. These data represent the best subsurface information available; however, variations may exist in the subsurface between boring locations.

1.4 SUBMITTALS

Government approval is required for submittals with a "GA" designation; submittals having an "FIO" designation are for information only. The following shall be submitted in accordance with Sections 01300 SUBMITTAL DESCRIPTIONS and 01305 SUBMITTAL PROCEDURES:

SD-09, Reports

Soils Tests; GA.

Copies of all laboratory and field test reports shall be submitted to the Contracting Officer within 72 hours of the completion of the test. Required soils tests for fill, backfill, and subgrade materials shall be submitted prior to beginning backfill and compaction operations.

PART 2 PRODUCTS

2.1 SELECT GRANULAR MATERIAL

Select granular material shall consist of well-graded sand, gravel, crushed gravel, crushed stone or crushed slag composed of hard, tough and durable particles, and shall contain not more than 10 percent by weight of material

passing a No. 200 mesh sieve and no less than 95 percent by weight passing the 1-inch sieve. Maximum size shall be 3 inches.

2.2 PIPE BEDDING AND INITIAL BACKFILL MATERIAL

Initial backfill shall consist of select granular material or satisfactory materials free from rocks 1 inch or larger in any dimension or free from rocks of such size as recommended by the pipe manufacturer, whichever is smaller. When the pipe is coated or wrapped for corrosion protection, the initial backfill material shall be free of stones larger than 1/2 inch in any dimension or as recommended by the pipe manufacturer, whichever is smaller.

2.3 BEDDING MATERIAL FOR BOX CULVERT

VDOT No. 57 aggregate conforming to VDOT Secton 203.

2.4 BRIDGING MATERIAL

Bridging material shall be clean gravel or sandy gravel meeting VDOT Size No. 3 or No. 2, or approved equivalent.

2.5 PLASTIC MARKING TAPE

Plastic marking tape shall be acid and alkali-resistant polyethylene film, 6-inches wide with minimum thickness of 0.004 inch. Tape shall have a minimum strength of 1750 psi lengthwise and 1500 psi crosswise. The tape shall be manufactured with integral wires, foil backing or other means to enable detection by a metal detector when the tape is buried up to 3 feet deep. The tape shall be of a type specifically manufactured for marking and locating underground utilities. The metallic core of the tape shall be encased in a protective jacket or provided with other means to protect it from corrosion. Tape color shall be as specified in TABLE 1 and shall bear a continuous printed inscription describing the specific utility.

TABLE 1. Tape Color

Red:	Electric
Yellow:	Gas, Oil, Dangerous Materials
Orange:	Telephone, Telegraph, Television, Police, and Fire Communications
Blue:	Water Systems
Green:	Sewer Systems

2.6 FLOWABLE BACKFILL

a. Materials

1. Hydraulic cement shall conform to the requirements of VDOT RBS Section 214.

2. Fly ash shall have no specific requirement for fineness, loss of ignition, or reactivity.

3. Water shall conform to the requirements of VDOT RBS Section 216.

4. Aggregates shall conform to the requirements of VDOT RBS

Sections 202 and 203 with a combined gradation as determined by the Contractor.

5. Admixtures shall conform to the requirements of VDOT RBS Section 215.

6. Granulated iron blast furnace slag shall conform to the requirements of VDOT RBS Section 215.

b. Flowable Backfill Mix Design: Mix design for flowable backfill shall be provided by the Contractor. Flowable backfill shall have a design compressive strength requirements shall be at 28 days when tested in accordance with ASTM C 31. Mix design shall result in a fluid product having no less than an 8-inch slump at time of placement. The Contractor shall submit a mix design for approval supported by laboratory test data verifying compliance with 28 day compressive strength requirements. Mix design shall be approved by the Engineer prior to placement.

PART 3 EXECUTION

3.1 DRAINAGE AND DEWATERING

3.1.1 Drainage

Surface water shall be directed away from excavation and construction sites so as to prevent erosion and undermining of foundations. Diversion ditches, dikes and grading shall be provided and maintained as necessary during construction. Excavated slopes and backfill surfaces shall be protected to prevent erosion and sloughing. Excavation shall be performed so that the site and area immediately surrounding the site and affecting operations at the site shall be continually and effectively drained.

3.1.2 Dewatering

Groundwater flowing toward or into excavations shall be controlled to prevent sloughing of excavation slopes and walls, boils, uplift and heave in the excavation and to eliminate interference with orderly progress of construction. French drains, sumps, ditches or trenches will not be permitted within 3 feet of the foundation of any structure, except with specific written approval, and after specific contractual provisions for restoration of the foundation area have been made. Control measures shall be taken by the time the excavation reaches the water level in order to maintain the integrity of the in-situ material. While the excavation is open, the water level shall be maintained continuously below the working level.

3.2 EXCAVATION

Excavation shall be performed to the lines and grades indicated. During excavation, material satisfactory for backfilling shall be stockpiled in an orderly manner at a distance from the banks of the trench equal to 1/2 the depth of the excavation, but in no instance closer than 2 feet. Excavated material not required or not satisfactory for backfill shall be removed from Government property. Grading shall be done as may be necessary to prevent surface water from flowing into the excavation, and any water accumulating therein shall be removed to maintain the stability of the bottom and sides of the excavation. Unauthorized overexcavation shall be backfilled in accordance with paragraph "BACKFILLING AND COMPACTION" at no

additional cost to the Government.

3.2.1 Trench Excavation

The trench shall be excavated as recommended by the manufacturer of the pipe to be installed. Trench walls below the top of the pipe shall be sloped, or made vertical, and of such width as recommended in the manufacturer's installation manual. Where no manufacturer's installation manual is available, trench walls below the top of pipe shall be made vertical. Trench walls shall be shored, cut back to a stable slope, or provided with equivalent means of protection for employees who may be exposed to moving ground or cave in accordance with EM 385-1-1. Trench walls which are cut back shall be excavated to at least the angle of repose of the soil. Special attention shall be given to slopes which may be adversely affected by weather or moisture content. The trench width below the top of pipe shall not exceed 24 inches plus pipe outside diameter (O.D.) for pipes of less than 24 inches inside diameter and shall not exceed 36 inches plus pipe outside diameter for sizes larger than 24 inches inside diameter. Where recommended trench widths are exceeded, redesign, stronger pipe, or special installation procedures shall be utilized by the Contractor. The cost of redesign, stronger pipe, or special installation procedures shall be borne by the Contractor without any additional cost to the Government.

3.2.1.1 Bottom Preparation

The bottoms of trenches shall be accurately graded to provide uniform bearing and support for the bottom quadrant of each section of the pipe. Bell holes shall be excavated to the necessary size at each joint or coupling to eliminate point bearing. Stones of 3 inches or greater in any dimension, or as recommended by the pipe manufacturer, whichever is smaller, shall be removed to avoid point bearing.

3.2.1.2 Removal of Unyielding Material

Where unyielding material is encountered in the bottom of the trench, such material shall be removed as directed to the required grade and replaced with suitable materials as provided in paragraph BACKFILLING AND COMPACTION. Payment therefore will be in conformance with the CHANGES clause of the CONTRACT CLAUSES.

3.2.1.3 Removal of Unsatisfactory and Unstable Materials

Where unsatisfactory or unstable materials are encountered in the bottom of the trench, such materials shall be removed to the depth directed and replaced to the proper grade with suitable materials as provided in paragraph BACKFILLING AND COMPACTION. Payment therefore will be in conformance with the CHANGES clause of the CONTRACT CLAUSES. When removal of unstable material is required due to action or inaction of the Contractor in his performance of the work, the resulting material shall be excavated and replaced by the Contractor without additional cost to the Government.

3.2.2 Excavation for Appurtenances

Excavation for manholes, catch-basins, inlets, or similar structures shall be sufficient to leave at least 12 inches clear between the outer structure surfaces and the face of the excavation or support members. Removal of unstable material shall be as specified above. When concrete or

masonry is to be placed in an excavated area, special care shall be taken not to disturb the bottom of the excavation. Excavation to the final grade level shall not be made until just before the concrete or masonry is to be placed.

3.2.3 Jacking, Boring, and Tunneling

Unless otherwise indicated, excavation shall be by open cut except that sections of a trench may be jacked, bored, or tunneled if, in the opinion of the Contracting Officer, the pipe, cable, or duct can be safely and properly installed and backfill can be properly compacted in such sections.

3.2.4 Stockpiles

Stockpiles of satisfactory materials shall be placed and graded as specified. Stockpiles shall be kept in a neat and well drained condition, giving due consideration to drainage at all times. The ground surface at stockpile locations shall be cleared, grubbed, and sealed by rubber-tired equipment. Excavated satisfactory and unsatisfactory materials shall be separately stockpiled. Stockpiles of satisfactory materials shall be protected from contamination which may destroy the quality and fitness of the stockpiled material. If the Contractor fails to protect the stockpiles, and any material becomes unsatisfactory, such material shall be removed and replaced with satisfactory material from approved sources at no additional cost to the Government. Locations of stockpiles of satisfactory materials shall be subject to prior approval of the Contracting Officer.

3.3 BORROW MATERIAL

Borrow material shall be selected to meet requirements and conditions of the particular fill for which it is to be used. Borrow materials shall be subject to approval. Necessary clearing, grubbing, disposal of debris, and satisfactory drainage of borrow pits shall be performed by the Contractor as incidental operations to the borrow excavation.

3.3.1 Selection

The source of borrow material shall be the Contractor's responsibility. Unless otherwise provided in the contract, the Contractor shall obtain from the owners the right to procure material, shall pay all royalties and other charges involved, and shall bear all the expense of developing the sources, including rights-of-way for hauling.

3.4 BACKFILLING AND COMPACTION

Backfill material shall consist of satisfactory material, select granular material, or initial backfill material as required. Before placing, material shall be moistened or aerated, including material which is unsatisfactory due solely to excess moisture, as necessary to obtain specified compaction. Backfill shall be placed in layers not exceeding 6 inches loose thickness for compaction by hand operated machine compactors, and 8 inches loose thickness for other than hand operated machines, unless otherwise specified. Each layer shall be compacted to at least 95 percent maximum density for cohesionless soils and 90 percent maximum density for cohesive soils, unless otherwise specified. Water flooding or jetting methods of compaction shall not be used.

3.4.1 Trench Backfill

Trenches shall be backfilled to the grade shown. The trench shall be backfilled to 2 feet above the top of pipe prior to performing the required pressure tests. The joints and couplings shall be left uncovered during the pressure test.

3.4.1.1 Replacement of Unyielding and Unsatisfactory Materials

Unyielding or unsatisfactory materials removed from the bottom of the trench shall be replaced with satisfactory material or initial backfill material, as directed, and placed as specified for backfill.

3.4.1.2 Replacement of Unstable Material

Unstable material removed from the bottom of the trench or excavation shall be replaced with select granular material or approved bridging material placed in layers between 8 and 12 inches loose thickness and compacted as directed. Care shall be taken not to over compact and pump up moisture, or otherwise weaken the underlying material.

3.4.1.3 Pipe Bedding and Initial Backfill

Bedding shall be of the type and thickness shown or specified. Initial backfill material shall be placed and compacted with approved tampers to a height of at least one foot above the utility pipe or conduit. The backfill shall be brought up evenly on both sides of the pipe for the full length of the pipe. Care shall be taken to ensure thorough compaction of the fill under the haunches of the pipe.

3.4.1.4 Final Backfill

The remainder of the trench, except for special materials for roadways, shall be filled with satisfactory material. Backfill material shall be placed and compacted as follows:

a. Roadways: Backfill shall be deposited in layers of a maximum of a 8-inch loose thickness and compacted to 90 percent maximum density for cohesive soils and 95 percent maximum density for cohesionless soils, except the top 6 inches of the subgrade shall be to 95 percent maximum density.

b. Sidewalks, Turfed or Seeded Areas and Miscellaneous Areas: Backfill shall be deposited in layers of a maximum of 12-inch loose thickness, and compacted to 85 percent maximum density for cohesive soils and 90 percent maximum density for cohesionless soils. This requirement shall also apply to all other areas not specifically designated above.

c. Flowable Backfill: Provide under existing utilities supported over trench during installation of new storm system. Mixing and transporting shall be in accordance with VDOT RBS Section 217 or by other methods approved by the Engineer. Temperature of flowable backfill shall be at least 50 degrees F at time of placement. Material shall be protected from freezing for 24 hours after placement.

3.4.2 Backfill for Appurtenances

After the manhole, catchbasin, inlet, or similar structure has been constructed backfill shall be placed in such a manner that the structure

will not be damaged by the shock of falling earth. The backfill material shall be deposited and compacted as specified for final backfill, and shall be brought up evenly on all sides of the structure to prevent eccentric loading and excessive stress.

3.5 SPECIAL REQUIREMENTS

Special requirements for both excavation and backfill relating to the specific utilities are as follows:

3.5.1 Water Lines

Trenches shall be of a depth to provide a minimum cover of 3 feet from the existing ground surface, or from the indicated finished grade, whichever is lower, to the top of the pipe.

3.5.2 Heat Distribution System

Initial backfill material shall be free of stones larger than 1/4 inch in any dimension.

3.5.3 Electrical Distribution System

Direct burial cable and conduit or duct line shall have a minimum cover of 24 inches from the finished grade, unless otherwise indicated. Special trenching requirements for direct-burial electrical cables and conduits are specified in Section 16375 ELECTRICAL DISTRIBUTION SYSTEM, UNDERGROUND.

3.5.4 Plastic Marking Tape

Warning tapes shall be installed directly above the pipe, at a depth of 18 inches below finished grade unless otherwise shown.

3.6 TESTING

3.6.1 Soils Tests

Testing shall be the responsibility of the contractor and shall be performed by an approved commercial testing laboratory or may be performed by the contractor subject to approval. Laboratory tests for moisture-density relations complete with zero air voids curve, gradation, and Atterberg limits shall be made in accordance with the procedures referenced in ASTM D 1557, ASTM D 422, and ASTM D 4318. Field tests for density and moisture content shall be made in accordance with ASTM D 1556 and ASTM D 2216 except that method ASTM D 2922 may be used to supplement tests by method ASTM D 1556. When ASTM D 2922 is used, the calibration curves shall be checked and adjusted using only the sand cone method as described in ASTM D 1556. ASTM D 2922 results in a wet unit weight of soil and when using this method, ASTM D 3017 shall be used to determine the moisture content of the soil. When soil conditions exist, which produce inconsistent results by the nuclear gauge method D 2922, only method D 1556 shall be used. Where results by Method D 2922 differ from those by Method D 1556, the results by method D 1556 shall govern for contract compliance.

The following test are required:

a. A minimum of one moisture-density test shall be performed for each

classification of fill material, backfill material, and existing subgrade material.

b. One Atterberg limits test and one gradation analysis is required for every six field density tests.

c. A minimum of one sand cone density test is required for every six nuclear gauge field density tests or fraction thereof. Worksheets of sand density and sand cone calibration shall be submitted to the Contracting Officer prior to commencing work and each time a new supply of sand is used.

d. A quart jar sample of each moisture-density test material shall be delivered to the Contracting Officer at the time the test is obtained.

e. A pint jar sample of each field-density test material shall be delivered to the Contracting Officer at the time the test is obtained.

f. Field density tests shall be performed as follows: a minimum of one test per lift per 100 linear feet of trench or fraction thereof is required for fill material. Locations of all tests shall be at the direction of the Contracting Officer.

3.6.2 Displacement of Sewers

After other required tests have been performed and the trench backfill compacted to 2 feet above the top of the pipe, the pipe shall be inspected to determine whether significant displacement has occurred. This inspection shall be conducted in the presence of the Contracting Officer. Pipe sizes larger than 36 inches shall be entered and examined, while smaller diameter pipe shall be inspected by shining a light or laser between manholes or manhole locations, or by the use of television cameras passed through the pipe. If, in the judgement of the Contracting Officer, the interior of the pipe shows poor alignment or any other defects that would cause improper functioning of the system, the defects shall be remedied as directed at no additional cost to the Government.

-- End of Section --

SECTION 02225

EARTHWORK FOR ROADWAYS
03/98

PART 1 GENERAL

1.1 REFERENCES

The publications listed below form a part of this specification to the extent referenced. The publications are referred to in the text by basic designation only.

AMERICAN SOCIETY FOR TESTING AND MATERIALS (ASTM)

ASTM D 422	(1963; R 1990) Particle-Size Analysis of Soils
ASTM D 1556	(1990) Density of Soil In Place by the Sand-Cone Method
ASTM D 1557	(1991) Laboratory Compaction Characteristics of Soil Using Modified Effort (56,000 ft-lbf/cu.ft. (2700 KN-M/cu.m.)Moisture-Density Relations of Soils and Soil-Aggregate Mixtures Using 10-Lb. (4.54-kg) Rammer and 18-In. (457-mm) Drop
ASTM D 2216	(1992) Laboratory Determination of Water (Moisture) Content of Soil and Rock
ASTM D 2487	(1990) Classification of Soils for Engineering Purposes
ASTM D 2922	(1981; R 1990) Density of Soil and Soil-Aggregate In Place by Nuclear Methods (Shallow Depth)
ASTM D 3017	(1988) Water Content of Soil and Rock In Place by Nuclear Methods (Shallow Depth)
ASTM D 4318	(1984) Liquid Limit, Plastic Limit, and Plasticity Index of Soils

1.2 DEFINITIONS

1.2.1 Satisfactory Materials

Materials classified by ASTM D 2487 as GW, GP, GM, GC, SW, SP, SM, are satisfactory as fill. The above listed materials are satisfactory in-situ.

1.2.2 Unsatisfactory Materials

Materials classified by ASTM D 2487 as OL, OH, and Pt are unsatisfactory in-situ. These materials plus CH, MH, CL and ML are unsatisfactory as fill. Unsatisfactory materials also include those materials containing roots and other organic matter, trash, debris, frozen materials, and stones larger than 3 inches.

1.2.3 Cohesionless and Cohesive Materials

Cohesionless materials include materials classified in ASTM D 2487 as GW, GP, SW, and SP. Cohesive materials include materials classified as GC, SC, ML, CL, MH, and CH. Materials classified as GM and SM will be identified as cohesionless only when the fines are nonplastic.

1.2.4 Degree of Compaction

Degree of compaction required is expressed as a percentage of the maximum density obtained by the appropriate test procedure presented in ASTM D 1557. This will be abbreviated below as a percent of laboratory maximum density.

1.3 SUBMITTALS

Government approval is required for submittals with a "GA" designation; submittals having an "FIO" designation are for information only. The following shall be submitted in accordance with Sections 01300 SUBMITTAL DESCRIPTIONS and 01305 SUBMITTAL PROCEDURES:

SD-09, Reports

SoilsCompaction Tests; GA

Copies of all laboratory and field test reports shall be submitted to the Contracting Officer within 72 hours of the completion of the test. Required soils tests for fill, backfill, and subgrade materials shall be submitted prior to beginning backfill embankment, and subgrade preparation operations.

1.4 SUBSURFACE DATA

Subsurface soil boring logs are attached to Section 01055 SOIL BORING DATA. The subsoil investigation report and samples of materials taken from subsurface investigations may be examined at the Norfolk District. These data represent the best subsurface information available; however, variations may exist in the subsurface between boring locations.

PART 2 PRODUCTS (Not Applicable)

PART 3 EXECUTION

The work conducted under this Section shall be coordinated and accomplished in accordance with requirements specified in Section 02072 EXCAVATION OF PETROLEUM CONTAMINATED SOIL.

3.1 DRAINAGE AND DEWATERING

3.1.1 Drainage

Surface water shall be directed away from excavation and construction sites so as to prevent erosion and undermining of foundations. Diversion ditches, dikes, and grading shall be provided and maintained as necessary during construction. Excavated slopes and backfill surfaces shall be protected to prevent erosion and sloughing. Excavation shall be performed so that the site and the area immediately surrounding the site and affecting operations at the site shall be continually and effectively drained.

3.1.2 Dewatering

Groundwater flowing toward or into excavations shall be controlled to prevent sloughing of excavation slopes and walls, boils, uplift and heave in the excavation and to eliminate interference with orderly progress of construction. French drains, sumps, ditches or trenches will not be permitted within 3 feet of the foundation of any structure, except with specific written approval, and after specific contractual provisions for restoration of the foundation area have been made. Control measures shall be taken by the time the excavation reaches the water level in order to maintain the integrity of the in situ material. While the excavation is open, the water level shall be maintained continuously below the working level as required to continue construction.

3.2 STRIPPING OF TOPSOIL

Where indicated or specified, topsoil shall be stripped to full depth. Topsoil shall be transported and deposited in stockpiles convenient to areas that are to receive application of the topsoil later. Topsoil shall be kept separate from other excavated materials, brush, litter, objectionable weeds, roots, stones larger than 2 inches in diameter, and other materials that would interfere with planting and maintenance operations. Topsoil shall be placed as specified in Section 02210 GRADING.

3.3 EXCAVATION

The Contractor shall perform excavation of every type of material encountered within the limits of the project, to the lines, grades, and elevations indicated and as specified herein. Excavation shall be unclassified. Grading shall be in conformity with the typical sections shown and the tolerances specified in paragraph "FINISHING." Satisfactory excavated materials shall be transported to and placed in fill or embankment within the limits of the work. Unsatisfactory materials below the grade shown shall be excavated below grade and replaced with satisfactory materials as directed. When removal of unsatisfactory material is caused by the action or inaction of the Contractor in his performance of the work, the resulting material shall be excavated and replaced with satisfactory material by the Contractor at no additional cost to the Government. Surplus satisfactory excavated material not required for fill or embankment, and unsatisfactory material shall be disposed of off Government property. Material required for fill or embankment in excess of that produced by excavation within the grading limits shall be excavated from the borrow areas indicated or from other approved areas selected by the Contractor as specified herein.

3.3.1 Ditches and Swales

Excavation of ditches and swales shall be accomplished by cutting accurately to the cross sections, grades, and elevations shown. Care shall be taken not to excavate ditches and swales below grades shown. Excessive open ditch or swale excavation shall be backfilled with satisfactory thoroughly compacted material to grades shown at no additional cost to the Government. Material excavated shall be disposed of as shown or as directed, except that in no case shall material be deposited less than 4 feet from the edge of a ditch. The Contractor shall maintain all excavations free from detrimental quantities of leaves, brush, sticks, trash, and other debris until final acceptance of the work.

3.3.2 Drainage Structures

Excavations shall be made accurately to the lines, grades, and elevations shown or as directed. Trenches and foundation pits shall be of sufficient size to permit the placement and removal of forms for the full length and width of structure footings and foundations as shown. When concrete or masonry is to be placed in an excavated area, special care shall be taken not to disturb the bottom of the excavation. Excavation to the final grade level shall not be made until just before the concrete or masonry is to be placed.

3.4 UTILIZATION OF EXCAVATED MATERIALS

All unsatisfactory materials removed from excavations shall be disposed of off Government property. Satisfactory material removed from excavations shall be used, insofar as practicable, in the construction of fills, embankments, subgrades, shoulders, bedding (as backfill), and for similar purposes. Unsatisfactory material and surplus satisfactory material to be wasted shall be disposed of off Government property. No excavated material shall be disposed of in such a manner as to obstruct the flow of any stream, endanger a partly finished structure, impair the efficiency or appearance of any structure, or be detrimental to the completed work in any way.

3.5 BORROW MATERIAL

Borrow material shall be selected to meet the requirements and conditions of the particular fill for which it is to be used. Borrow materials shall be subject to approval. Necessary clearing, grubbing, disposal of debris, and satisfactory drainage of borrow pits shall be performed by the Contractor as incidental operations to the borrow excavation.

3.5.1 Selection

Borrow materials shall be obtained from sources outside the limits of Government-controlled land. Borrow material from approved sources on Government-controlled land may be obtained without payment of royalties. Unless specifically provided, no borrow shall be obtained from within the limits of the project site without prior written approval. The source of borrow material shall be the contractor's responsibility. Unless otherwise provided in the contract, the contractor shall obtain from the owners the right to procure material, shall pay all royalties and other charges involved, and shall bear all the expense of developing the sources, including rights-of-way for hauling.

3.6 GRADING AREAS

When so provided and where indicated, work under contract will be divided into grading areas, within which satisfactory excavated material shall be placed in embankments, fills, and required backfills. The Contractor shall not haul satisfactory material excavated in one grading area to another grading area except as directed in writing.

3.7 BACKFILL

Backfill adjacent to any and all types of structures shall be placed and compacted to at least 90 percent laboratory maximum density for cohesive materials or 95 percent laboratory maximum density for cohesionless

materials, in such a manner as to prevent wedging action or eccentric loading upon or against any structure. Material shall be moistened or aerated as necessary to provide the moisture content that will readily facilitate obtaining the specified compaction with the equipment used. Ground surface on which backfill is to be placed shall be prepared as specified in paragraph "PREPARATION OF GROUND SURFACE FOR EMBANKMENTS." Compaction requirements for backfill materials shall also conform to the applicable portions of paragraphs "SUBGRADE PREPARATION" below and Sections 02072 STORM-DRAINAGE SYSTEM and 02222 EXCAVATION, TRENCHING, AND BACKFILLING FOR UTILITIES SYSTEMS. Compaction shall be accomplished by equipment well suited to the material being compacted.

3.8 PREPARATION OF GROUND SURFACE FOR EMBANKMENTS

Ground surface on which fill is to be placed shall be stripped of live, dead, or decayed vegetation, rubbish, debris, and other unsatisfactory material; plowed, disked, or otherwise broken up; pulverized; moistened or aerated as necessary; thoroughly mixed; and compacted to at least 90 percent laboratory maximum density for cohesive materials or 95 percent laboratory maximum density for cohesionless materials. Compaction shall be accomplished by equipment well suited to the material being compacted. The prepared ground surface shall be scarified and moistened or aerated as required just prior to placement of embankment materials to assure adequate bond between embankment material and the prepared ground surface.

3.9 SUBGRADE PREPARATION

3.9.1 Construction

Subgrade shall be shaped to line, grade, and cross section, and compacted as specified. This operation shall include plowing, disking, and any moistening or aerating required to obtain specified compaction. Soft or otherwise unsatisfactory material shall be removed and replaced with satisfactory excavated material or other approved material as directed. Low areas resulting from removal of unsatisfactory material shall be brought up to required grade with satisfactory materials, and the entire subgrade shall be shaped to line, grade, and cross section and compacted as specified. Compaction shall be accomplished by equipment well suited to the type of material being compacted. After rolling, the surface of the subgrade for roadways shall not show deviation greater than 1/2-inch when tested with a 10-foot straightedge applied both parallel and at right angles to the centerline of the area. The elevation of the finished subgrade shall not vary more than 0.05 foot from the established grade and cross section.

3.9.1.1 Subgrade for Pavements

Subgrade for pavements shall be compacted to at least 95 percent of laboratory maximum density for the depth of 6 inches below the surface of the subgrade shown.

3.10 FINISHING

The surface of all excavations, embankments, and subgrades shall be finished to a smooth and compact surface in accordance with the lines, grades, and cross sections or elevations shown. The degree of finish for all graded areas shall be within 0.1 foot of the grades and elevations indicated except that the degree of finish for subgrades shall be specified in paragraph "SUBGRADE PREPARATION" above. Ditches and swales shall be

finished in a manner that will result in effective drainage. The surface of areas to be turfed shall be finished to a smoothness suitable for the application of turfing materials.

3.11 TESTING

3.11.1 Soils Tests:

Testing shall be the responsibility of the contractor and shall be performed by an approved commercial testing laboratory or may be performed by the contractor subject to approval. Laboratory tests for moisture-density relations complete with zero air voids curve, gradation, and Atterberg limits shall be made in accordance with the procedures referenced in ASTM D 1557, ASTM D 422, and ASTM D 4318. Field tests for density and moisture content shall be made in accordance with ASTM D 1556 and ASTM D 2216 except that method ASTM D 2922 may be used to supplement tests by method ASTM D 1556. When ASTM D 2922 is used, the calibration curves shall be checked and adjusted using only the sand cone method as described in ASTM D 1556. ASTM D 2922 results in a wet unit weight of soil and when using this method, ASTM D 3017 shall be used to determine the moisture content of the soil. When soil conditions exist which produce inconsistent results by the nuclear gauge method D 2922, only method D1556 shall be used. Where results by Method D 2922 differ from those by Method D 1556, the results by Method D 1556 shall govern for contract compliance.

The following submittals are required:

a. A minimum of one moisture-density test shall be performed for each classification of fill material, backfill material, and existing subgrade material.

b. One Atterberg limits test and one gradation analysis is required for every six field density tests.

c. A minimum of one sand cone density test is required for every six nuclear gauge field density tests or fraction thereof. Worksheets of sand density and sand cone calibration shall be submitted to the Contracting Officer prior to commencing work and each time a new supply of sand is used.

d. A quart jar sample of each moisture-density test material shall be delivered to the Contracting Officer at the time the test is obtained.

e. A pint jar sample of each field-density test material shall be delivered to the Contracting Officer at the time the test is obtained.

f. Field density tests shall be performed as follows: a minimum of one test per lift per 1000 square yards or fraction thereof is required for fill material and a minimum of one test per 1500 square yards or fraction thereof is required for recompacted subgrades prior to filling. Locations of all tests shall be at the direction of the Contracting Officer.

3.11.2 Tolerance Tests for Subgrades

Continuous checks on the degree of finish specified in paragraph "SUBGRADE

PREPARATION" shall be made during construction of the subgrades.

3.12 SUBGRADE AND EMBANKMENT PROTECTION

During construction, embankments and excavations shall be kept shaped and drained. Ditches and drains along subgrade shall be maintained in such a manner as to drain effectively at all times. The finished subgrade shall not be disturbed by traffic or other operation and shall be protected and maintained by the Contractor in a satisfactory condition until subbase, base, or pavement is placed. The storage or stockpiling of materials on the finished subgrade will not be permitted. No subbase, base course, or pavement shall be laid until the subgrade has been checked and approved, and in no case shall subbase, base, surfacing, or pavement be placed on a muddy, spongy, or frozen subgrade.

-- End of Section --

SECTION 02241

AGGREGATE BASE COURSE
04/92

PART 1 GENERAL

1.1 REFERENCES

The publications listed below form a part of this specification to the extent referenced. The publications are referred to in the text by basic designation only.

AMERICAN SOCIETY FOR TESTING AND MATERIALS (ASTM)

ASTM C 29	(1991a) Unit Weight and Voids in Aggregate
ASTM C 131	(1989) Resistance to Degradation of Small-Size Coarse Aggregate by Abrasion and Impact in the Los Angeles Machine
ASTM C 136	(1992) Sieve Analysis of Fine and Coarse Aggregates
ASTM D 75	(1987; R 1992) Sampling Aggregates
ASTM D 422	(1963; R 1990) Particle-Size Analysis of Soils
ASTM D 1556	(1990) Density and Unit Weight of Soil in Place by the Sand-Cone Method
ASTM D 1557	(1991) Laboratory Compaction Characteristics of Soil Using Modified Effort (56,000 ft-1bf/cu. ft. (2,700 kN-m/cu. m.))
ASTM D 2167	(1984; R 1990) Density and Unit Weight of Soil in Place by the Rubber Balloon Method
ASTM D 2922	(1991) Density of Soil and Soil-Aggregate in Place by Nuclear Methods (Shallow Depth)
ASTM D 3017	(1988) Water Content of Soil and Rock in Place by Nuclear Methods (Shallow Depth)
ASTM D 4318	(1984) Liquid Limit, Plastic Limit, and Plasticity Index of Soils
ASTM E 11	(1987) Wire-Cloth Sieves for Testing Purposes

VIRGINIA DEPARTMENT OF TRANSPORTATION (VDOT)

VDOT RBS	(January 1998) Road and Bridge Specifications

1.2 DEFINITIONS

1.2.1 Aggregate Base

Aggregate base as used herein is well graded, durable aggregate uniformly moistened and mechanically stabilized by compaction.

1.2.2 Degree of Compaction

Degree of compaction required is expressed as a percentage of the maximum density obtained by the test procedure presented in ASTM D 1557 abbreviated hereinafter as percent laboratory maximum density.

1.3 SUBMITTALS

Government approval is required for submittals with a "GA" designation; submittals having an "FIO" designation are for information only. The following shall be submitted in accordance with Section 01300 SUBMITTAL DESCRIPTIONS:

SD-01 Data

Plant, Equipment, Machines, and Tools; FIO.

List of proposed equipment to be used in performance of construction work including descriptive data.

SD-09 Reports

Sampling and Testing; FIO. Field Density; FIO.

Calibration curves and related test results prior to using the device or equipment being calibrated. Copies of field test results within 24 hours after the tests are performed. Certified copies of test results for approval not less than 30 days before material is required for the work.

SD-18 Records

Waybills and Delivery Tickets; FIO. Coarse Aggregate; FIO.

Copies of waybills and delivery tickets during the progress of the work. Certified waybills and delivery tickets for all materials actually used. A notification stating which type of coarse aggregate is to be used.

1.4 WEATHER LIMITATIONS

Base shall not be constructed when the atmospheric temperature is less than 35 degrees F. Base shall not be constructed on subgrades that are frozen or contain frost. If the temperature falls below 35 degrees F, completed areas shall be protected against any detrimental effects of freezing.

1.5 PLANT, EQUIPMENT, MACHINES, AND TOOLS

1.5.1 General Requirements

Plant, equipment, machines, and tools used in the work shall be subject to approval and shall be maintained in satisfactory working condition at all times. Other compacting equipment may be used in lieu of that specified, where it can be demonstrated that the results are equivalent. The

equipment shall be adequate and have the capability of producing the results specified.

1.5.2 Steel-Wheeled Rollers

Steel-wheeled rollers shall be the self-propelled type weighing not less than 10 tons, with a minimum weight of 300 pounds per inch width of rear wheel. Wheels of the rollers shall be equipped with adjustable scrapers. The use of vibratory rollers is optional.

1.5.3 Pneumatic-Tired Rollers

Pneumatic-tired rollers shall have four or more tires, each loaded to a minimum of 30,000 pounds and inflated to a minimum pressure of 150 psi. The loading shall be equally distributed to all wheels, and the tires shall be uniformly inflated. Towing equipment shall also be pneumatic-tired.

1.5.4 Mechanical Spreader

Mechanical spreader shall be self-propelled or attached to a propelling unit capable of moving the spreader and material truck. The device shall be steerable and shall have variable speeds forward and reverse. The spreader and propelling unit shall be carried on tracks, rubber tires, or drum-type steel rollers that will not disturb the underlying material. The spreader shall contain a hopper, an adjustable screed, and outboard bumper rolls and be designed to have a uniform, steady flow of material from the hopper. The spreader shall be capable of laying material without segregation across the full width of the lane to a uniform thickness and to a uniform loose density so that when compacted, the layer or layers shall conform to thickness and grade requirements indicated. The Contracting Officer may require a demonstration of the spreader prior to approving use in performance of the work.

1.5.5 Sprinkling Equipment

Sprinkling equipment shall consist of tank trucks, pressure distributors, or other approved equipment designed to apply controlled quantities of water uniformly over variable widths of surface.

1.5.6 Tampers

Tampers shall be of an approved mechanical type, operated by either pneumatic pressure or internal combustion, and shall have sufficient weight and striking power to produce the compaction required.

1.5.7 Straightedge

The Contractor shall furnish and maintain at the site, in good condition, one 10-foot straightedge for each bituminous paver, for use in the testing of the finished surface. Straightedge shall be made available for Government use. Straightedges shall be constructed of aluminum or other lightweight metal and shall have blades of box or box-girder cross section with flat bottom reinforced to insure rigidity and accuracy. Straightedges shall have handles to facilitate movement on pavement.

1.6 STOCKPILING MATERIALS

Materials, including approved material available from excavation and grading, shall be stockpiled in the manner and at locations designated.

Before stockpiling of material, storage sites shall be cleared, and sloped to drain. Materials obtained from different sources shall be stockpiled separately.

1.7 SAMPLING AND TESTING

1.7.1 General Requirements

Sampling and testing shall be performed by an approved commercial testing laboratory or by facilities furnished by the Contractor. No work requiring testing shall be permitted until the facilities have been inspected and approved. Tests shall be performed in sufficient numbers and at the locations and times directed to insure that materials and compaction meet specified requirements. Copies of test results shall be furnished to the Contracting Officer within 24 hours of completion of tests.

1.7.2 Test Results

Results shall verify that materials comply with this specification. When a material source is changed, the new material will be tested for compliance. When deficiencies are found, the initial analysis shall be repeated and the material already placed shall be retested to determine the extent of unacceptable material. All in-place unacceptable material shall be replaced or modified as directed by the Contracting Officer.

1.7.3 Sampling

Aggregate samples for laboratory tests shall be taken in accordance with ASTM D 75.

1.7.4 Sieve Analysis

Before starting work, at least one sample of material shall be tested in accordance with ASTM C 136 and ASTM D 422 on sieves conforming to ASTM E 11.

1.7.5 Liquid Limit and Plasticity Index

One liquid limit and plasticity index shall be performed for each sieve analysis. Liquid limit and plasticity index shall be in accordance with ASTM D 4318.

1.7.6 Laboratory Density

Tests shall provide a moisture-density relationship for the aggregate. Tests shall be conducted in accordance with ASTM D 1557 .

1.7.7 Weight Per Cubic Foot of Slag

Weight per cubic foot of slag shall be determined in accordance with ASTM C 29.

1.7.8 Wear Tests

Wear tests shall be performed in accordance with ASTM C 131. A minimum of one test per aggregate source shall be run.

PART 2 PRODUCTS

2.1 MATERIALS

2.1.1 Aggregates

Aggregates shall consist of crushed stone or slag, crushed gravel, angular sand, or other approved material. Aggregates shall be durable and sound, free from lumps of clay, organic matter, objectionable coatings, and other foreign material. Material certified as conforming to VDOT RBS Size No. 21A or 21B is acceptable aggregate.

PART 3 EXECUTION

3.1 GENERAL REQUIREMENTS

When the base is constructed in more than one layer, the previously constructed layer shall be cleaned of loose and foreign matter by sweeping with power sweepers or power brooms, except that hand brooms may be used in areas where power cleaning is not practicable. Adequate drainage shall be provided during the entire period of construction to prevent water from collecting or standing on the working area. Line and grade stakes shall be provided as necessary for control. Grade stakes shall be in lines parallel to the centerline of the area under construction and suitably spaced for string lining.

3.2 PREPARATION OF UNDERLYING COURSE

3.2.1 General Requirements

Before constructing aggregate base course, the previously constructed underlying course shall be cleaned of foreign substances. Surface of underlying course shall meet the specified compaction and surface tolerances. Subgrade shall conform to Section 02225 EARTHWORK FOR ROADWAYS. Ruts or soft, yielding spots that may appear in the underlying course, areas having inadequate compaction, and deviations of the surface from requirements specified shall be corrected. For cohesionless underlying materials containing sands, sand gravels, or any other cohesionless material in harmful quantities, the surface shall be mechanically stabilized with aggregate prior to placement of the aggregate course. Stabilization may be accomplished by mixing base course material into the underlying course and compacting by approved methods. Properly compacted material will be considered as part of the underlying course and shall meet all requirements for the underlying course. Finished underlying course shall not be disturbed by traffic or other operations and shall be maintained in a satisfactory condition until base course is placed.

3.2.2 Grade Control

Underlying material shall be excavated to sufficient depth for the required base course thickness so that the finished base course with the subsequent surface course will meet the fixed grade. Finished and completed area shall conform to the lines, grades, cross section, and dimensions indicated.

3.3 INSTALLATION

3.3.1 Mixing and Placing

Materials shall be mixed by the stationary plant, traveling plant, or road mix method and placed in such a manner as to obtain uniformity of the aggregate base course material and at a uniform optimum water content for

compaction. The Contractor shall make such adjustments in mixing or placing procedures or in equipment to obtain the true grades, to minimize segregation and degradation, to reduce or accelerate loss or increase of water, and to ensure a satisfactory base course.

3.3.2 Edges of Base Course

Approved material shall be placed along edges of aggregate base course in such quantities as will compact to thickness of the course being constructed, or to the thickness of each layer in a multiple layer course, allowing in each operation at least a 1-foot width of the shoulder to be rolled and compacted simultaneously with rolling and compacting of each layer of base course.

3.3.3 Compaction

Each layer of aggregate base course shall be compacted. Water content shall be maintained at optimum. Density of compacted mixture shall be at least 100 percent of laboratory maximum density. Rolling shall begin at the outside edge of the surface and proceed to the center, overlapping on successive trips at least one-half the width of the roller. Alternate trips of the roller shall be slightly different lengths. Speed of the roller shall be such that displacement of the aggregate does not occur. Areas inaccessible to the rollers shall be compacted with mechanical tampers, and shall be shaped and finished by hand methods.

3.3.4 Layer Thickness

Compacted thickness of the aggregate course shall be as indicated. No layer shall be in excess of 8 inches nor less than 3 inches in compacted thickness.

3.3.5 Finishing

The surface of the top layer shall be finished to grade and cross section shown. Finished surface shall be of uniform texture. Light blading during compaction may be necessary for the finished surface to conform to the lines, grades, and cross sections. Should the surface for any reason become rough, corrugated, uneven in texture, or traffic marked prior to completion, such unsatisfactory portion shall be scarified, reworked, recompacted, or replaced as directed.

3.3.5.1 Smoothness

Surface of each layer shall show no deviations in excess of 3/8 inch when tested with 10-foot straightedge. Deviations exceeding this amount shall be corrected by removing material and replacing with new material, or by reworking existing material and compacting, as directed.

3.3.5.2 Thickness Control

Compacted thickness of the base course shall be within l/2 inch of the thickness indicated. Where the measured thickness is more than l/2 inch deficient, such areas shall be corrected by scarifying, adding new material of proper gradation, reblading, and recompacting as directed. Where the measured thickness is more than l/2 inch thicker than indicated, the course shall be considered as conforming to the specified thickness requirements. Average job thickness shall be the average of all thickness measurements taken for the job, but shall be within l/4 inch of the

thickness indicated.

3.4 FIELD QUALITY CONTROL

3.4.1 Field Density

Field in-place density shall be determined in accordance with ASTM D 1556, ASTM D 2167, ASTM D 2922. When ASTM D 2922 is used, the calibration curves shall be checked, and adjusted if necessary, using the sand cone method as described in paragraph Calibration of the ASTM publication. ASTM D 2922 results in a wet unit weight of soil, and when using this method, ASTM D 3017 shall be used to determine the moisture content of the soil. The calibration curves furnished with the moisture gauges shall be checked along with density calibration checks as described in ASTM D 3017. If ASTM D 2922 is used, in-place densities shall be checked by ASTM D 1556 at least once per lift for each 1000 square yard of base material. Calibration curves and calibration test results shall be furnished within 24 hours of the conclusion of the tests. At least one field density test shall be performed for each 250 square yards of each layer of base material.

3.4.2 Smoothness

Measurements for deviation from grade and cross section shown shall be taken in successive positions parallel to the road centerline with a 10 foot straightedge. Measurements shall also be taken perpendicular to the road centerline at 15 foot intervals.

3.4.3 Thickness

Thickness of the base course shall be measured at intervals in such a manner as to ensure one measurement for each 500 square yards of base course. Measurements shall be made in 3-inch diameter test holes penetrating the base course.

3.5 TRAFFIC

Completed portions of the area may be opened to traffic, provided there is no marring or distorting of the surface by the traffic. Heavy equipment shall not be permitted except when necessary to construction, and then the area shall be protected against marring or damage to the completed work.

3.6 MAINTENANCE

The aggregate base course shall be maintained in a satisfactory condition until accepted. Maintenance shall include immediate repairs to any defects and shall be repeated as often as necessary to keep the area intact.

3.7 DISPOSAL OF UNSATISFACTORY MATERIALS

Removed in-place materials that are unsuitable for the base course material that is removed for the required correction of defective areas, and waste material and debris shall be disposed of as specified in Section 02050.

-- End of Section --

SECTION 02380A

STONE, CHANNEL, SHORELINE/COASTAL PROTECTION FOR STRUCTURES
10/01

PART 1 GENERAL

1.1 REFERENCES

The publications listed below form a part of this specification to the extent referenced. The publications are referred to in the text by basic designation only.

AMERICAN SOCIETY FOR TESTING AND MATERIALS (ASTM)

ASTM C 136	(1996a) Sieve Analysis of Fine and Coarse Aggregates
ASTM D 75	(1987; R 1997) Sampling Aggregates
ASTM D 5519	(1994) Particle Size Analysis of Natural and Man-Made Riprap Materials

U.S. ARMY CORPS OF ENGINEERS (USACE)

EM 1110-2-1601	(1994) Hydraulic Design of Flood Control Channels

1.2 SUBMITTALS

Government approval is required for submittals with a "G" designation; submittals not having a "G" designation are for information only. When used, a designation following the "G" designation identifies the office that will review the submittal for the Government. The following shall be submitted in accordance with Section 01330 SUBMITTAL PROCEDURES:

SD-06 Test Reports

Gradation Test; G

Submit VDOT certified gradation test reports.

SD-07 Certificates

Stone

Filter Material

Submit certificates of compliance attesting that the materials meet specification requirements.

1.3 GOVERNMENT TESTING AND STUDIES

1.3.1 Stone

1.3.1.1 General

Stone shall be of a suitable quality to ensure permanence in the structure and in the climate in which it is to be used. It shall be free from cracks, blast fractures, bedding, seams and other defects that would tend to increase its deterioration from natural causes. A crack that is defined as being detrimental shall have a minimum width of 4 mil and shall be continuous for one-third the dimension of at least two sides of the stone.

1.4 REGULATORY REQUIREMENTS

The regulatory requirements listed below form a part of this specification to the extent referenced. The regulatory requirements are referred to in the text by basic designation only.

Virginia Department of TRANSPORTATION (VDOT)

(2002) Road and Bridge Specifications

1.5 CONSTRUCTION TOLERANCES

The finished surface and stone layer thickness shall not deviate from the lines and grades shown by more than the tolerances listed below. Tolerances are measured perpendicular to the indicated neatlines. Extreme limits of the tolerances given shall not be continuous in any direction for more than five (5) times the nominal stone dimension nor for an area greater than 200 square feet of the structure surface.

NEATLINE TOLERANCES

MATERIAL	ABOVE NEATLINE inches	BELOW NEATLINE inches
Bedding	1	1
Riprap	12	12

The intention is that the work shall be built generally to the required elevations, slope and grade and that the outer surfaces shall be even and present a neat appearance. Placed material not meeting these limits shall be removed or reworked as directed by the Contracting Officer. Payment will not be made for excess material which the Contracting Officer permits to remain in place.

1.6 TERMINOLOGY

1.6.1 Riprap

Riprap is defined as a material having a gradation band similar to those specified in EM 1110-2-1601, Chapter 3, uniform graded material. Riprap is normally produced by mechanical methods, with a jaw crusher and grizzly after the stone has been mined by blasting in a quarry. Riprap gradations have a maximum top size of 3.5 tons.

1.6.2 Graded Stone

Graded Stone is defined as material with gradations that are produced by the mining technique and minimal additional processing other than the use of a skeleton bucket or a bar grizzly. The gradation band have more fines

than riprap and have gradations with top size up to 3.5 tons and could be classified as being well graded.

PART 2 PRODUCTS

2.1 FILTER MATERIAL

Filter material shall consist of VDOT #57 stone

2.2 STONE

2.2.1 Riprap

Riprap shall meet the requirements of the Virginia Department of Transportation Class II as specified in Section 414 of the Road and Bridge specifications.

PART 3 EXECUTION

3.1 BASE PREPARATION

Areas on which filter layers and riprap are to be placed shall be graded and/or dressed to conform to cross sections shown on the contract drawings within an allowable tolerance of plus 2 inches and minus 4 inches from the theoretical slope lines and grades. The prepared base shall be approved by the Contracting Officer. Where such areas are below the allowable minus tolerance limit they shall be brought to grade by fill with sand fill and then compacted to a density equal to the adjacent in place material. Subaqueous areas on which filter materials and riprap are to be placed shall be graded and/or dressed to conform to cross sections shown on the contract drawings within an allowable tolerance of plus 1 foot and minus 2 feet from the specified slope line and grades. Where such areas are below the allowable minus tolerance limit they shall be filled with sand fill. As an alternative, these areas may be filled with filter material. No payment will be made for any material thus required.

3.2 PLACEMENT OF FILTER LAYERS

3.2.1 General

Filter layers, composed of geotextile and a 6-inch layer of filter stone shall be placed on the prepared base as described below, in accordance with the details shown on the contract drawings, and within the limits either shown on the contract drawings or staked in the field.

3.2.2 Geotextile

Installation of geotextile shall be as specified in Section 02378 GEOTEXTILES USED AS FILTERS.

3.2.3 Placement of Filter Material on Prepared Base

Filter material shall be spread uniformly on the prepared base to the slope lines and grades as indicated on the contract drawings and in such manner as to avoid damage to the prepared base. Placement shall begin at the bottom of the area to be covered and continue up slope. Subsequent loads of material shall be placed against previously placed material in such a manner as to ensure a relatively homogenous mass. Placing of crushed stone by methods which tend to segregate the particle sizes within the filter layers or cause mixing of the separate layers will not be permitted. Any

damage to the surface of the prepared base during placement of the material shall be repaired before proceeding with the work. Compaction of material placed on the prepared base will not be required, but each layer shall be finished to present an adequately even surface, free from mounds or windrows.

3.3 PLACEMENT OF RIPRAP

3.3.1 General

Riprap shall be placed on the filter layers specified in paragraph(s) FILTER MATERIAL within the limits shown on the contract drawings.

3.3.2 Placement

Riprap shall be placed in a manner which will produce a well-graded mass of rock with the minimum practicable percentage of voids, and shall be constructed, within the specified tolerances, to the lines and grades shown on the contract drawings or staked in the field. The average tolerance of the entire job shall have no more than 50 percent of the tolerances specified above. Riprap shall be placed to its full course thickness in one operation and in such manner as to avoid displacing the filter material. The large stones shall be well distributed and the entire mass of stones in their final position shall be graded to conform to the gradation specified in paragraph RIPRAP, subparagraph GENERAL. Placement shall begin at the bottom of the area to be covered and continue up slope. Subsequent loads of material shall be placed against previously placed material in such a manner as to ensure a relatively homogenous mass. The finished riprap shall be free from objectionable pockets of small stones and clusters of larger stones. Placing riprap in layers will not be permitted. Placing riprap by dumping it into chutes, or by similar methods likely to cause segregation of the various sizes, shall not be permitted. Placing riprap by dumping it at the top of the slope and pushing it down the slope shall not be permitted. No equipment shall be operated directly on the completed stone protection system. The desired distribution of the various sizes of stones throughout the mass shall be obtained by selective loading of the material at the quarry or other source; by controlled dumping of successive loads during final placing; or by other methods of placement which will produce the specified results. Each truckload shall be representative of the gradation requirements. Rearranging of individual stones shall be required to the extent necessary to obtain a well-graded distribution of stone sizes as specified above. The Contractor shall maintain the stone protection until accepted by the Contracting Officer and any material displaced prior to acceptance and due to the Contractor's negligence shall be replaced at his expense and to the lines and grades shown on the contract drawings.

3.4 TESTS AND INSPECTIONS

3.4.1 Bedding Layers, Filter Layers, and Sand Fill

3.4.1.1 General

The Contractor shall perform gradation tests to assure compliance with contract requirements and shall maintain detailed records. The bedding material, filter materials and/or sand fill shall be sampled in accordance with ASTM D 75 and tested in accordance with ASTM C 136. The Contractor shall perform the tests before and after surveys of each layer of stone protection material placed.

3.4.1.2 Reporting

Reporting shall be in accordance with paragraph GRADATION TEST.

3.4.2 Gradation Tests for Stone

3.4.2.1 Gradation Test Method for Riprap

Gradation tests shall be performed in accordance with ASTM D 5519, Test Method A or VDOT specifications.

-- End of Section --

SECTION 02467

HELICAL PIER TYPE PILES

PART 1 GENERAL

1.1 REFERENCES

The publications listed below form a part of this specification to the extent referenced. The publications are referred to in the text by the basic designation only.

AMERICAN SOCIETY FOR TESTING AND MATERIALS (ASTM)

ASTM A 36	(1994) Carbon Structural Steel
ASTM A 53	(1995; Rev. A) Pipe, Steel, Black and Hot-Dipped, Zinc Coated Welded and Seamless
ASTM A 123	(1989; Rev. A) Zinc (Hot-Dip Galvanized) Coatings on Iron and Steel Products
ASTM A 153	(1995) Zinc Coating (Hot-Dip Galvanized) on Iron and Steel Hardware
ASTM A 325	(1993) High Strength Bolts for Structural Steel Joists
ASTM A 563	(1993) Carbon and Alloy Steel Nuts
ASTM F 436	(1993) Hardened Steel Washers

1.2 SUBMITTALS

Submit the following in accordance with Section 01330, "Submittal Procedures."

SD-02 Manufacturer's Catalog Data

Helical lead sections.

Extension sections.

Embedment plate or device.

SD-04 Drawings

Helical Pier type pile assemblies and design calculations G

Submit shop drawings and design calculations sealed by a registered professional engineer for review by the Contracting Officer. Shop drawings shall include the size, type of lead section, minimum length, minimum installation torque, and the method and procedures for installation. Calculations shall predict the minimum working load of the assemblies with respect to the soil conditions at the project site, accepted theories of soil mechanics, and accepted engineering practice and standards for the

proposed materials.

SD-08 Statements

Installation equipment

SD-12 Field Test Reports

Performance Test

Submit the method, procedure, and equipment proposed for the performance test.

Proof test results

Soil borings

Submit the soil boring logs sealed by a professional engineer, for soil borings and sampling identified herein to be accomplished per ASTM D 1586.

SD-13 Certificates

Steel

Bolts, nuts, washers and plates

Galvanizing

1.3 DEFINITIONS

The definitions listed below are descriptive of the items of this specification.

1.3.1 Helical Pier Type Piles

A helical pier type pile is a compression-bearing element consisting of a helical lead section, extensions, and embedment plates.

1.3.2 Helical Lead Sections

A helical lead section consists of one or more helices welded to a square steel shaft or round steel pipe. It.is advanced into the soil by hydraulically-operated rotary equipment.

1.3.3 Extension Sections

An extension is comprised of high tensile strength bar or steel pipe connected to the helical lead section.

1.3.4 Embedment Plate

An embedment plate is a steel plate attached to the extension which transfers load from the pile cap to the helical pier type pile.

1.4 REQUIREMENTS

1.4.1 Piling

Provide helical pier type piles. Do not order piles until pile test reports are approved by the Government. Test piles shall be 5 feet longer than the bid length.

1.4.2 Pile Lengths and Quantity

Base bids upon a pile length of 30 feet and the total quantity indicated in Section B of the contract.

Should total number of piles vary from that specified as the basis for bidding, an adjustment in the contract price and time for completion will be made. Adjustments in contract price will not be made for cutting off piles: for any portion of a pile remaining above cut-off elevation; or for broken, damaged, or rejected piles.

Measurement and Payment

Requirements of "FAR 52.211-18, Variation in Estimated Quantity" shall not apply to payment for piling. Each pile and test pile acceptably provided will be paid for at the bid unit price per unit length, which price shall include items incidental to furnishing and driving the piles including mobilization and demobilization, reinstalling piles, an additional 1.5 m in furnished length for any test pile not installed beyond estimated pile length, and cutting off piles at the cutoff elevation. The cost for additional length for the test piles shall be included in the total unit price cost for the job. Payment will be made for job and test piles at the bid unit price for the length of pile, from tip to final cutoff, actually provided. Should the actual cumulative pile length driven (tip to cutoff) vary more than 25 percent from the total pile length specified as a basis for bidding, at the direction of the Contracting Officer, the unit price per unit length will be adjusted in accordance with provisions of "FAR 52.236-2, Differing Site Conditions." Piles required to be pulled at no fault of the Contractor will be paid for at the bid unit price for furnishing and installing the pile in its original position plus 25 percent of the amount to cover the cost of pulling. Such pulled piles when re-installed will be paid for at 25 percent of the bid unit price for the length driven. Payment for each acceptably provided complete test loading of a single pile will be made at the contract unit price per test, which price shall include furnishing, placing, and removing testing equipment, and placing and removing test loads.

PART 2 PRODUCTS

2.1 MATERIALS

2.2 STEEL

2.2.1 Structural Steel

ASTM A 36, galvanized.

2.2.2 Steel Pipe

ASTM A 53, Type E or S, Grade B, galvanized.

2.3 BOLTS, NUTS, WASHERS, AND PLATES

2.3.1 Bolts

ASTM A 325, galvanized.

2.3.2 Nuts

ASTM A 563, Grade A, heavy hex style, galvanized.

2.3.3 Washers

ASTM F 436, galvanized.

2.3.4 Plates

ASTM F 436, galvanized.

2.3.5 Galvanizing

ASTM A 123 or ASTM A 153 as applicable, unless specified otherwise galvanize after fabrication where practicable.

2.4 INSTALLATION EQUIPMENT

The installation equipment shall be capable of installing the helical pier type piles to the required torque indicated by the approved design calculations.

PART 3 EXECUTION

3.1 INSTALLATION REQUIREMENTS

Install helical pier type piles after rough grading at pile locations have been completed. Prior to the work of this section, carefully inspect the work of all other trades and verify that all such work is complete to the point where this installation may properly commence. Verify the location and depth of any buried utilities existing at the site prior to installing any helical pier type piles. Helical pier type piles shall be installed to a minimum torque required by design. Helical pier type piles shall be installed by rotary type, hydraulically-operated drilling machine with a forward and reverse torque capability. The equipment shall include appropriate gauges to indicate the down pressure applied. Percussion drilling equipment will not be permitted.

3.2 TERMINATION CRITERIA

The installation torque and minimum length of production piles shall be established on the basis of the performance testing program. The maximum installation torque shall not exceed the torque rating of the pile as indicated on the approved shop drawing. Both the minimum installation torque and minimum length criteria indicated on the approved shop drawings shall be satisfied unless a shorter length is established by performance testing.

In the event the torque rating of the pile is approached before the minimum length is achieved, the installation shall be terminated and the Contracting Officer contacted.

In the event the lead section exceeds more than 50 percent beyond the minimum length and the minimum installation torque is not yet achieved, the installation shall be stopped, and the Contracting Officer contacted.

The installation equipment shall not be disengaged from the pile without approval from the Contracting Officer.

If the lead section is stopped or deflected by a subsurface obstruction, the installation shall be terminated and the Contracting Officer contacted. The installation equipment shall not be disengaged from the pile without approval from the Contracting Officer.

The average torque for the last meter of penetration shall be used as a basis of comparison with the minimum installation torque indicated on the approved shop drawings and established during performance tests.

3.3 HELICAL PIER TYPE PILE TESTING

Provide performance test for helical pier type piles as specified herein Submit performance test and proof test results to the Contracting Officer within 2 working days of tests.

3.3.1 Performance Test

All performance test piles shall be tested to 250 percent of the minimum working load or ultimate capacity, whichever occurs first. Ultimate capacity is defined as the maximum load the pile can sustain without a displacement of 0.5 inch. Provide three performance tests at locations as directed by the Contracting Officer. Redesign of the pile may be required in the event the pile fails to achieve a capacity equal to 200 percent of the minimum working load or the total movement of the pile exceeds 1 inch prior to achieving a test load equal to 200 percent of the specified minimum working load. Performance test piles shall be identical to comparable production piles regarding size, length installation procedure, and materials. Performance test piles which successfully sustain the test loads may be used as production piles.

3.3.2 Soil Borings

Soil borings are included in Appendix A.

3.4 RECORDS

Keep complete and accurate records of all helical pier type pile installations and testing. Indicate the pile location, length, elevation of tip and top of pile, and the rated minimum working load for all installations. Record and report immediately any unusual conditions encountered during pile installation.

-- End of Section --

SECTION 02510A

WATER DISTRIBUTION SYSTEM
04/98

PART 1 GENERAL

1.1 REFERENCES

The publications listed below form a part of this specification to the extent referenced. The publications are referred to in the text by basic designation only.

AMERICAN SOCIETY FOR TESTING AND MATERIALS (ASTM)

ASTM B 88	(1996) Seamless Copper Water Tube
ASTM D 1784	(1999a) Rigid Poly(Vinyl Chloride) (PVC) Compounds and Chlorinated Poly(Vinyl Chloride) (CPVC) Compounds
ASTM D 1785	(1999) Poly(Vinyl Chloride) (PVC) Plastic Pipe, Schedules 40, 80, and 120
ASTM D 2241	(1996b) Poly(Vinyl Chloride) (PVC) Pressure-Rated Pipe (SDR Series)
ASTM D 2464	(1999) Threaded Poly(Vinyl Chloride) (PVC) Plastic Pipe Fittings, Schedule 80
ASTM D 2466	(1999) Poly(Vinyl Chloride) (PVC) Plastic Pipe Fittings, Schedule 40
ASTM D 2467	(1999) Poly(Vinyl Chloride) (PVC) Plastic Pipe Fittings, Schedule 80
ASTM D 2564	(1996a) Solvent Cements for Poly(Vinyl Chloride) (PVC) Plastic Piping Systems
ASTM D 2855	(1996) Making Solvent-Cemented Joints with Poly(Vinyl Chloride) (PVC) Pipe and Fittings
ASTM F 477	(1999) Elastomeric Seals (Gaskets) for Joining Plastic Pipe

ASME INTERNATIONAL (ASME)

ASME B1.20.1	(1983; R 1992) Pipe Threads, General Purpose (Inch)
ASME B16.26	(1988) Cast Copper Alloy Fittings for Flared Copper Tubes

AMERICAN WATER WORKS ASSOCIATION (AWWA)

AWWA B300	(1992) Hypochlorites
AWWA B301	(1992) Liquid Chlorine
AWWA C104	(1995) Cement-Mortar Lining for Ductile-Iron Pipe and Fittings for Water
AWWA C110	(1993) Ductile-Iron and Gray-Iron Fittings, 3 In. Through 48 In. (75 mm through 1200 mm), for Water and Other Liquids
AWWA C111	(1995) Rubber-Gasket Joints for Ductile-Iron Pressure Pipe and Fittings
AWWA C151	(1996) Ductile-Iron Pipe, Centrifugally Cast, for Water or Other Liquids
AWWA C153	(1994; Errata Nov 1996) Ductile-Iron Compact Fittings, 3 In. Through 24 In. (76 mm through 610 mm) and 54 In. through 64 In. (1,400 mm through 1,600 mm) for Water Service
AWWA C500	(1993; C500a) Metal-Sealed Gate Valves for Water Supply Service
AWWA C504	(1994) Rubber-Seated Butterfly Valves
AWWA C509	(1994; Addendum 1995) Resilient-Seated Gate Valves for Water Supply Service
AWWA C600	(1993) Installation of Ductile-Iron Water Mains and Their Appurtenances
AWWA C606	(1997) Grooved and Shouldered Joints
AWWA C651	(1992) Disinfecting Water Mains
AWWA C800	(1989) Underground Service Line Valves and Fittings
AWWA C900	(1997; C900a) Polyvinyl Chloride (PVC) Pressure Pipe, 4 In. Through 12 In., for Water Distribution

ASBESTOS CEMENT PIPE PRODUCERS ASSOCIATION (ACPPA)

ACPPA Work Practices	(1988) Recommended Work Practices for A/C Pipe

DUCTILE IRON PIPE RESEARCH ASSOCIATION (DIPRA)

DIPRA-Restraint Design	(1997) Thrust Restraint Design for Ductile Iron Pipe

MANUFACTURERS STANDARDIZATION SOCIETY OF THE VALVE AND FITTINGS INDUSTRY (MSS)

MSS SP-80	(1997) Bronze Gate, Globe, Angle and Check Valves

NATIONAL FIRE PROTECTION ASSOCIATION (NFPA)

NFPA 24	(1995) Installation of Private Fire Service Mains and Their Appurtenances
NFPA 49	(1994) Hazardous Chemicals Data
NFPA 325-1	(1994) Fire Hazard Properties of Flammable Liquids, Gases, and Volatile Solids
NFPA 704	(1996) Identification of the Fire Hazards of Materials for Emergency Response

NSF INTERNATIONAL (NSF)

NSF 14	(1998) Plastics Piping Components and Related Materials
NSF 61	(1999) Drinking Water System Components - Health Effects (Sections 1-9)

1.2 PIPING

This section covers water supply and service lines, and connections to building service at a point approximately 5 feet outside buildings and structures to which service is required. The Contractor shall have a copy of the manufacturer's recommendations for each material or procedure to be utilized available at the construction site at all times.

1.2.1 Service Lines

Piping for water service lines less than 3 inchesin diameter shall be polyvinyl chloride (PVC) plastic, or copper tubing, unless otherwise shown or specified.

1.2.2 Supply Lines 3 Inches or Larger

Piping for water supply lines 3 inches or larger shall be ductile iron, or polyvinyl chloride (PVC) plastic, through 36 inch nominal diameter.

1.2.3 Potable Water Lines

Piping and components of potable water systems which come in contact with the potable water shall conform to NSF 61.

1.2.4 Plastic Piping System

Plastic piping system components (PVC, polyethylene, thermosetting resin and reinforced plastic mortar pressure) intended for transportation of potable water shall comply with NSF 14 and be legibly marked with their symbol.

1.2.5 Excavation, Trenching, and Backfilling

Excavation, trenching, and backfilling shall be in accordance with the applicable provisions of Section 02316 EXCAVATION, TRENCHING, AND

BACKFILLING FOR UTILITIES SYSTEMS, except as modified herein.

1.3 SUBMITTALS

Government approval is required for submittals with a "G" designation; submittals not having a "G" designation are for information only. When used, a designation following the "G" designation identifies the office that will review the submittal for the Government. The following shall be submitted in accordance with Section 01330 SUBMITTAL PROCEDURES:

SD-03 Product Data

Installation.

The manufacturer's recommendations for each material or procedure to be utilized.

Satisfactory Installation.

A statement signed by the principal officer of the contracting firm stating that the installation is satisfactory and in accordance with the contract drawings and specifications, and the manufacturer's prescribed procedures and techniques, upon completion of the project and before final acceptance.

SD-06 Test Reports

Bacteriological Disinfection.

Test results from commercial laboratory verifying disinfection.

1.4 HANDLING

Pipe and accessories shall be handled to ensure delivery to the trench in sound, undamaged condition, including no injury to the pipe coating or lining. If the coating or lining of any pipe or fitting is damaged, the repair shall be made by the Contractor in a satisfactory manner, at no additional cost to the Government. No other pipe or material shall be placed inside a pipe or fitting after the coating has been applied. Pipe shall be carried into position and not dragged. Use of pinch bars and tongs for aligning or turning pipe will be permitted only on the bare ends of the pipe. The interior of pipe and accessories shall be thoroughly cleaned of foreign matter before being lowered into the trench and shall be kept clean during laying operations by plugging or other approved method. Before installation, the pipe shall be inspected for defects. Material found to be defective before or after laying shall be replaced with sound material without additional expense to the Government. Rubber gaskets that are not to be installed immediately shall be stored in a cool and dark place.

1.4.1 Miscellaneous Plastic Pipe and Fittings

Polyvinyl Chloride (PVC) pipe and fittings shall be handled and stored in accordance with the manufacturer's recommendations. Storage facilities shall be classified and marked in accordance with NFPA 704, with classification as indicated in NFPA 49 and NFPA 325-1.

PART 2 PRODUCTS

2.1 PIPE

Pipe shall conform to the respective specifications and other requirements specified below.

2.1.1 Plastic Pipe

2.1.1.1 PVC Plastic Pipe

Pipe, couplings and fittings shall be manufactured of material conforming to ASTM D 1784, Class 12454B.

a. Pipe Less Than 4 inch Diameter:

(1) Screw-Joint: Pipe shall conform to dimensional requirements of ASTM D 1785 Schedule 80, with joints meeting requirements of 150 psi working pressure, 200 psi hydrostatic test pressure, unless otherwise shown or specified. Pipe couplings when used, shall be tested as required by ASTM D 2464.

(2) Elastomeric-Gasket Joint: Pipe shall conform to dimensional requirements of ASTM D 1785 Schedule 40, with joints meeting the requirements of 150 psi working pressure, 200 psi hydrostatic test pressure, unless otherwise shown or specified, or it may be pipe conforming to requirements of ASTM D 2241, elastomeric joint, with the following applications:

SDR	Maximum Working Pressure psi	Minimum Hydrostatic Pressure psi
26	100	133
21	120	160
17	150	200
13.5	200	266

(3) Solvent Cement Joint: Pipe shall conform to dimensional requirements of ASTM D 1785 or ASTM D 2241 with joints meeting the requirements of 150 psi working pressure and 200 psi hydrostatic test pressure.

2.1.2 Ductile-Iron Pipe

Ductile-iron pipe shall conform to AWWA C151, working pressure not less than 150 psi, unless otherwise shown or specified. Pipe shall be cement-mortar lined in accordance with AWWA C104. Linings shall be standard.

2.1.3 Copper Tubing

Copper tubing shall conform to ASTM B 88, Type K, annealed.

2.2 FITTINGS AND SPECIALS

2.2.1 PVC Pipe System

a. For pipe less than 4 inch diameter, fittings for threaded pipe shall conform to requirements of ASTM D 2464, threaded to conform

to the requirements of ASME B1.20.1 for use with Schedule 80 pipe and fittings; fittings for solvent cement jointing shall conform to ASTM D 2466 or ASTM D 2467; and fittings for elastomeric-gasket joint pipe shall be iron conforming to AWWA C110 or AWWA C111. Iron fittings and specials shall be cement-mortar lined (standard thickness) in accordance with AWWA C104.

b. For pipe 4 inch diameter and larger, fittings and specials shall be iron, bell end in accordance with AWWA C110, 150 psi pressure rating unless otherwise shown or specified, except that profile of bell may have special dimensions as required by the pipe manufacturer; or fittings and specials may be of the same material as the pipe with elastomeric gaskets, all in conformance with AWWA C900. Iron fittings and specials shall be cement-mortar lined (standard thickness) in accordance with AWWA C104. Fittings shall be bell and spigot or plain end pipe, or as applicable. Ductile iron compact fittings shall be in accordance with AWWA C153.

2.2.2 Ductile-Iron Pipe System

Fittings and specials shall be suitable for 150 psi pressure rating, unless otherwise specified. Fittings and specials for mechanical joint pipe shall conform to AWWA C110. Fittings and specials for use with push-on joint pipe shall conform to AWWA C110 and AWWA C111. Fittings and specials shall be cement-mortar lined (standard thickness) in accordance with AWWA C104. Ductile iron compact fittings shall conform to AWWA C153.

2.2.3 Copper Tubing System

Fittings and specials shall be flared and conform to ASME B16.26.

2.3 JOINTS

2.3.1 Plastic Pipe Jointing

2.3.1.1 PVC Pipe

Joints, fittings, and couplings shall be as specified for PVC pipe. Joints connecting pipe of differing materials shall be made in accordance with the manufacturer's recommendations, and as approved by the Contracting Officer.

2.3.2 Ductile-Iron Pipe Jointing

a. Mechanical joints shall be of the stuffing box type and shall conform to AWWA C111.

b. Push-on joints shall conform to AWWA C111.

c. Rubber gaskets and lubricants shall conform to the applicable requirements of AWWA C111.

2.3.3 Isolation Joints

Isolation joints shall be installed between nonthreaded ferrous and nonferrous metallic pipe, fittings and valves. Isolation joints shall consist of a sandwich-type flange isolation gasket of the dielectric type, isolation washers, and isolation sleeves for flange bolts. Isolation gaskets shall be full faced with outside diameter equal to the flange outside diameter. Bolt isolation sleeves shall be full length. Units

shall be of a shape to prevent metal-to-metal contact of dissimilar metallic piping elements.

a. Sleeve-type couplings shall be used for joining plain end pipe sections. The two couplings shall consist of one steel middle ring, two steel followers, two gaskets, and the necessary steel bolts and nuts to compress the gaskets.

b. Split-sleeve type couplings may be used in aboveground installations when approved in special situations and shall consist of gaskets and a housing in two or more sections with the necessary bolts and nuts.

2.3.4 Copper Tubing Jointing

Joints shall be compression-pattern flared and shall be made with the specified fittings.

2.4 VALVES

2.4.1 Gate Valves

Gate valves shall be designed for a working pressure of not less than 150 psi. Valve connections shall be as required for the piping in which they are installed. Valves shall have a clear waterway equal to the full nominal diameter of the valve, and shall be opened by turning counterclockwise. The operating nut or wheel shall have an arrow, cast in the metal, indicating the direction of opening.

a. Valves smaller than 3 inches shall be all bronze and shall conform to MSS SP-80, Type 1, Class 150.

b. Valves 3 inches and larger shall be iron body, bronze mounted, and shall conform to AWWA C500. Flanges shall not be buried. An approved pit shall be provided for all flanged connections.

c. Resilient-Seated Gate Valves: For valves 3 to 12 inches in size, resilient-seated gate valves shall conform to AWWA C509.

2.4.2 Rubber-Seated Butterfly Valves

Rubber-seated butterfly valves shall conform to the performance requirements of AWWA C504. Wafer type valves conforming to the performance requirements of AWWA C504 in all respects, but not meeting laying length requirements will be acceptable if supplied and installed with a spacer providing the specified laying length. All tests required by AWWA C504 shall be met. Flanged-end valves shall be installed in an approved pit and provided with a union or sleeve-type coupling in the pit to permit removal. Mechanical-end valves 3 through 10 inches in diameter may be direct burial if provided with a suitable valve box, means for manual operation, and an adjacent pipe joint to facilitate valve removal. Valve operators shall restrict closing to a rate requiring approximately 60 seconds, from fully open to fully closed.

2.4.3 Vacuum and Air Relief Valves

Vacuum and air relief valves shall be of the size shown and shall be of a type that will release air and prevent the formation of a vacuum. The valves shall automatically release air when the lines are being filled with

water and shall admit air into the line when water is being withdrawn in excess of the inflow. Valves shall be iron body with bronze trim and stainless steel float.

2.5 VALVE BOXES

Valve boxes shall be cast iron or concrete, except that concrete boxes may be installed only in locations not subjected to vehicular traffic. Cast-iron boxes shall be extension type with slide-type adjustment and with flared base. The minimum thickness of metal shall be 3/16 inch. Concrete boxes shall be the standard product of a manufacturer of precast concrete equipment. The word "WATER" shall be cast in the cover. The box length shall adapt, without full extension, to the depth of cover required over the pipe at the valve location.

2.6 MISCELLANEOUS ITEMS

2.6.1 Service Clamps

Service clamps shall have a pressure rating not less than that of the pipe to be connected and shall be either the single or double flattened strap type. Clamps shall have a galvanized malleable-iron body with cadmium plated straps and nuts. Clamps shall have a rubber gasket cemented to the body.

2.6.2 Corporation Stops

Corporation stops shall have standard corporation stop thread conforming to AWWA C800 on the inlet end, with flanged joints, compression pattern flared tube couplings, or wiped joints for connections to goosenecks.

2.6.3 Goosenecks

Copper tubing for gooseneck connections shall conform to the applicable requirements of ASTM B 88, Type K, annealed. Length of cable requirement connections shall be in accordance with standard practice.

2.6.4 Service Stops

Service stops shall be water-works inverted-ground-key type, oval or round flow way, tee handle, without drain. Pipe connections shall be suitable for the type of service pipe used. All parts shall be of bronze with female iron-pipe-size connections or compression-pattern flared tube couplings, and shall be designed for a hydrostatic test pressure not less than 200 psi.

2.6.5 Tapping Sleeves

Tapping sleeves of the sizes indicated for connection to existing main shall be the cast gray, ductile, or malleable iron, split-sleeve type with flanged or grooved outlet, and with bolts, follower rings and gaskets on each end of the sleeve. Construction shall be suitable for a maximum working pressure of 150 psi. Bolts shall have square heads and hexagonal nuts. Longitudinal gaskets and mechanical joints with gaskets shall be as recommended by the manufacturer of the sleeve. When using grooved mechanical tee, it shall consist of an upper housing with full locating collar for rigid positioning which engages a machine-cut hole in pipe, encasing an elastomeric gasket which conforms to the pipe outside diameter around the hole and a lower housing with positioning lugs, secured together

during assembly by nuts and bolts as specified, pretorqued to 50 foot-pound.

2.6.6 Service Boxes

Service boxes shall be cast iron or concrete and shall be extension service boxes of the length required for the depth of the line, with either screw or slide-type adjustment. The boxes shall have housings of sufficient size to completely cover the service stop or valve and shall be complete with identifying covers.

2.6.7 Disinfection

Chlorinating materials shall conform to the following:

Chlorine, Liquid: AWWA B301.

Hypochlorite, Calcium and Sodium: AWWA B300.

PART 3 EXECUTION

3.1 INSTALLATION

3.1.1 Cutting of Pipe

Cutting of pipe shall be done in a neat and workmanlike manner without damage to the pipe. Unless otherwise recommended by the manufacturer and authorized by the Contracting Officer, cutting shall be done with an approved type mechanical cutter. Wheel cutter shall be used when practicable. Copper tubing shall be cut square and all burrs shall be removed. Squeeze type mechanical cutters shall not be used for ductile iron.

3.1.2 Adjacent Facilities

3.1.2.1 Sewer Lines

Where the location of the water pipe is not clearly defined in dimensions on the drawings, the water pipe shall not be laid closer horizontally than 10 feet from a sewer except where the bottom of the water pipe will be at least 12 inches above the top of the sewer pipe, in which case the water pipe shall not be laid closer horizontally than 6 feet from the sewer. Where water lines cross under gravity-flow sewer lines, the sewer pipe, for a distance of at least 10 feet each side of the crossing, shall be fully encased in concrete or shall be made of pressure pipe with no joint located within 3 feet horizontally of the crossing. Water lines shall in all cases cross above sewage force mains or inverted siphons and shall be not less than 2 feet above the sewer main. Joints in the sewer main, closer horizontally than 3 feet to the crossing, shall be encased in concrete.

3.1.2.2 Water Lines

Water lines shall not be laid in the same trench with sewer lines, gas lines, fuel lines, or electric wiring.

3.1.2.3 Copper Tubing Lines

Copper tubing shall not be installed in the same trench with ferrous piping materials.

3.1.2.4 Nonferrous Metallic Pipe

Where nonferrous metallic pipe, e.g. copper tubing, crosses any ferrous piping material, a minimum vertical separation of 12 inchesshall be maintained between pipes.

3.1.3 Joint Deflection

3.1.3.1 Offset for Flexible Plastic Pipe

Maximum offset in alignment between adjacent pipe joints shall be as recommended by the manufacturer and approved by the Contracting Officer, but shall not exceed 5 degrees.

3.1.3.2 Allowable for Ductile-Iron Pipe

The maximum allowable deflection shall be as given in AWWA C600. If the alignment requires deflection in excess of the above limitations, special bends or a sufficient number of shorter lengths of pipe shall be furnished to provide angular deflections within the limit set forth.

3.1.4 Placing and Laying

Pipe and accessories shall be carefully lowered into the trench by means of derrick, ropes, belt slings, or other authorized equipment. Water-line materials shall not be dropped or dumped into the trench. Abrasion of the pipe coating shall be avoided. Except where necessary in making connections with other lines or as authorized by the Contracting Officer, pipe shall be laid with the bells facing in the direction of laying. The full length of each section of pipe shall rest solidly upon the pipe bed, with recesses excavated to accommodate bells, couplings, and joints. Pipe that has the grade or joint disturbed after laying shall be taken up and relaid. Pipe shall not be laid in water or when trench conditions are unsuitable for the work. Water shall be kept out of the trench until joints are complete. When work is not in progress, open ends of pipe, fittings, and valves shall be securely closed so that no trench water, earth, or other substance will enter the pipes or fittings. Where any part of the coating or lining is damaged, the repair shall be made by and at the Contractor's expense in a satisfactory manner. Pipe ends left for future connections shall be valved, plugged, or capped, and anchored, as shown.

3.1.4.1 Piping Connections

Where connections are made between new work and existing mains, the connections shall be made by using specials and fittings to suit the actual conditions. When made under pressure, these connections shall be installed using standard methods as approved by the Contracting Officer. Connections to existing asbestos-cement pipe shall be made in accordance with ACPPA Work Practices.

3.1.4.2 Penetrations

Pipe passing through walls of valve pits and structures shall be provided with ductile-iron or Schedule 40 steel wall sleeves. Annular space between walls and sleeves shall be filled with rich cement mortar. Annular space between pipe and sleeves shall be filled with mastic.

3.1.4.3 Flanged Pipe

Flanged pipe shall only be installed above ground or with the flanges in valve pits.

3.1.5 Jointing

3.1.5.1 PVC Plastic Pipe Requirements

a. Pipe less than 4 inch diameter: Threaded joints shall be made by wrapping the male threads with approved thread tape or applying an approved lubricant, then threading the joining members together. The joint shall be tightened using strap wrenches to prevent damage to the pipe and/or fitting. To avoid excessive torque, joints shall be tightened no more than one thread past hand-tight. Preformed rubber-ring gaskets for elastomeric-gasket joints shall be made in accordance with ASTM F 477 and as specified. Pipe ends for push-on joints shall be beveled to facilitate assembly and marked to indicate when the pipe is fully seated. The gasket shall be prelubricated to prevent displacement. The gasket and ring groove in the bell or coupling shall match. The manufacturer of the pipe or fitting shall supply the elastomeric gasket. Couplings shall be provided with stops or centering rings to assure that the coupling is centered on the joint. Solvent cement joints shall use sockets conforming to ASTM D 2467. The solvent cement used shall meet the requirements of ASTM D 2564; the joint assembly shall be made in accordance with ASTM D 2855 and the manufacturer's specific recommendations.

b. Pipe 4 through 12 inch diameter: Joints shall be elastomeric gasket as specified in AWWA C900. Jointing procedure shall be as specified for pipe less than 4 inch diameter with configuration using elastomeric ring gasket.

3.1.5.2 Ductile-Iron Pipe Requirements

Mechanical and push-on type joints shall be installed in accordance with AWWA C600 for buried lines or AWWA C606 for grooved and shouldered pipe above ground or in pits.

3.1.5.3 Copper Tubing Requirements

Joints shall be made with flared fittings. The flared end tube shall be pulled tightly against the tapered part of the fitting by a nut which is part of the fitting, so there is metal-to-metal contact.

3.1.6 Installation of Service Lines

Service lines shall include the pipeline connecting building piping to water distribution lines to the connections with the building service at a point approximately 5 feet outside the building where such building service exists. Where building services are not installed, the Contractor shall terminate the service lines approximately 5 feet from the site of the proposed building as shown on the plans. Such service lines shall be closed with plugs or caps. All service stops and valves shall be provided with service boxes. Service lines shall be constructed in accordance with the following requirements:

3.1.6.1 Service Lines 2 Inches and Smaller

Service lines 2 inches and smaller shall be connected to the main by a

directly-tapped corporation stop or by a service clamp. A corporation stop and a copper gooseneck shall be provided with either type of connection. Maximum sizes for directly-tapped corporation stops and for outlets with service clamps shall be as in TABLE I. Where 2 or more gooseneck connections to the main are required for an individual service, such connections shall be made with standard branch connections. The total clear area of the branches shall be at least equal to the clear area of the service which they are to supply.

TABLE I. SIZE OF CORPORATION STOPS AND OUTLET

Pipe Size Inches	Corporation Stops, Inches For Ductile-Iron Pipe	Outlets w/Service Clamps, Inches Single & Double Strap
3	--	1
4	1	1
6	1-1/4	1-1/2
8	1-1/2	2
10	1-1/2	2
12 & larger	2	2

NOTE:

a. Service lines 1-1/2 inches and smaller shall have a service stop.

b. Service lines 2 inches in size shall have a gate valve.

3.1.6.2 Service Lines for Sprinkler Supplies

Water service lines used to supply building sprinkler systems for fire protection shall be connected to the water distribution main in accordance with NFPA 24.

3.1.7 Setting of Valves and Valve Boxes

3.1.7.1 Location of Valves

After delivery, valves shall be drained to prevent freezing and shall have the interiors cleaned of all foreign matter before installation. Stuffing boxes shall be tightened and hydrants and valves shall be fully opened and fully closed to ensure that all parts are in working condition. Check, pressure reducing, vacuum, and air relief valves shall be installed in valve pits. Valves and valve boxes shall be installed where shown or specified, and shall be set plumb. Valve boxes shall be centered on the valves. Boxes shall be installed over each outside gate valve unless otherwise shown. Where feasible, valves shall be located outside the area of roads and streets. Earth fill shall be tamped around each valve box or pit to a distance of 4 feet on all sides of the box, or the undisturbed trench face if less than 4 feet.

3.1.7.2 Location of Service Boxes

Where water lines are located below paved streets having curbs, the boxes shall be installed directly back of the curbs. Where no curbing exists, service boxes shall be installed in accessible locations, beyond the limits of street surfacing, walks and driveways.

3.1.8 Thrust Restraint

Plugs, caps, tees and bends deflecting 11.25 degrees or more, either vertically or horizontally, on waterlines 4 inches in diameter or larger, and fire hydrants shall be provided with thrust restraints. Valves shall be securely anchored or shall be provided with thrust restraints to prevent movement. Thrust restraints shall be either thrust blocks or, for ductile-iron pipes, restrained joints.

3.1.8.1 Thrust Blocks

Thrust blocking shall be concrete of a mix not leaner than: 1 cement, 2-1/2 sand, 5 gravel; and having a compressive strength of not less than 2,000 psi after 28 days. Blocking shall be placed between solid ground and the hydrant or fitting to be anchored. Unless otherwise indicated or directed, the base and thrust bearing sides of thrust blocks shall be poured directly against undisturbed earth. The sides of thrust blocks not subject to thrust may be poured against forms. The area of bearing shall be as shown or as directed. Blocking shall be placed so that the fitting joints will be accessible for repair. Steel rods and clamps, protected by galvanizing or by coating with bituminous paint, shall be used to anchor vertical down bends into gravity thrust blocks.

3.1.8.2 Restrained Joints

For ductile-iron pipe, restrained joints shall be designed by the Contractor or the pipe manufacturer in accordance with DIPRA-Restraint Design.

3.2 HYDROSTATIC TESTS

Where any section of a water line is provided with concrete thrust blocking for fittings or hydrants, the hydrostatic tests shall not be made until at least 5 days after installation of the concrete thrust blocking, unless otherwise approved.

3.2.1 Pressure Test

After the pipe is laid, the joints completed and the trench partially backfilled leaving the joints exposed for examination, the newly laid piping or any valved section of piping shall, unless otherwise specified, be subjected for 1 hour to a hydrostatic pressure test of 200 psi. Each valve shall be opened and closed several times during the test. Exposed pipe, joints, fittings, and valves shall be carefully examined during the partially open trench test. Joints showing visible leakage shall be replaced or remade as necessary. Cracked or defective pipe, joints, fittings, hydrants and valves discovered in consequence of this pressure test shall be removed and replaced with sound material, and the test shall be repeated until the test results are satisfactory.

3.2.2 Leakage Test

Leakage test shall be conducted after the pressure tests have been satisfactorily completed. The duration of each leakage test shall be at

least 2 hours, and during the test the water line shall be subjected to not less than 200 psi pressure. Leakage is defined as the quantity of water to be supplied into the newly laid pipe, or any valved or approved section, necessary to maintain pressure within 5 psi of the specified leakage test pressure after the pipe has been filled with water and the air expelled. Piping installation will not be accepted if leakage exceeds the allowable leakage which is determined by the following formula:

L = 0.0001351ND(P raised to 0.5 power)

L = Allowable leakage in gallons per hour
N = Number of joints in the length of pipeline tested
D = Nominal diameter of the pipe in inches
P = Average test pressure during the leakage test, in psi gauge

Should any test of pipe disclose leakage greater than that calculated by the above formula, the defective joints shall be located and repaired until the leakage is within the specified allowance, without additional cost to the Government.

3.2.3 Time for Making Test

Except for joint material setting or where concrete thrust blocks necessitate a 5-day delay, pipelines jointed with rubber gaskets, mechanical or push-on joints, or couplings may be subjected to hydrostatic pressure, inspected, and tested for leakage at any time after partial completion of backfill. Cement-mortar lined pipe may be filled with water as recommended by the manufacturer before being subjected to the pressure test and subsequent leakage test.

3.2.4 Concurrent Hydrostatic Tests

The Contractor may elect to conduct the hydrostatic tests using either or both of the following procedures. Regardless of the sequence of tests employed, the results of pressure tests, leakage tests, and disinfection shall be as specified. Replacement, repair or retesting required shall be accomplished by the Contractor at no additional cost to the Government.

a. Pressure test and leakage test may be conducted concurrently.

b. Hydrostatic tests and disinfection may be conducted concurrently, using the water treated for disinfection to accomplish the hydrostatic tests. If water is lost when treated for disinfection and air is admitted to the unit being tested, or if any repair procedure results in contamination of the unit, disinfection shall be reaccomplished.

3.3 BACTERIALDISINFECTION

3.3.1 Bacteriological Disinfection

Before acceptance of potable water operation, each unit of completed waterline shall be disinfected as prescribed by AWWA C651. After pressure tests have been made, the unit to be disinfected shall be thoroughly flushed with water until all entrained dirt and mud have been removed before introducing the chlorinating material. The chlorinating material shall be either liquid chlorine, calcium hypochlorite, or sodium hypochlorite, conforming to paragraph MISCELLANEOUS ITEMS. The chlorinating material shall provide a dosage of not less than 50 ppm and

shall be introduced into the water lines in an approved manner. Polyvinyl Chloride (PVC) pipe lines shall be chlorinated using only the above specified chlorinating material in solution. The agent shall not be introduced into the line in a dry solid state. The treated water shall be retained in the pipe long enough to destroy all non-spore forming bacteria. Except where a shorter period is approved, the retention time shall be at least 24 hours and shall produce not less than 25 ppm of free chlorine residual throughout the line at the end of the retention period. Valves on the lines being disinfected shall be opened and closed several times during the contact period. The line shall then be flushed with clean water until the residual chlorine is reduced to less than 1.0 ppm. During the flushing period, each fire hydrant on the line shall be opened and closed several times. From several points in the unit, the Contracting Officer will take samples of water in proper sterilized containers for bacterial examination. Personnel from the Contractor's commercial laboratory shall take at least 3 water samples from different points, approved by the Contracting Officer, in proper sterilized containers and perform a bacterial examination in accordance with state approved methods. The commercial laboratory shall be certified by the state's approving authority for examination of potable water. The disinfection shall be repeated until tests indicate the absence of pollution for at least 2 full days. The unit will not be accepted until satisfactory bacteriological results have been obtained.

3.4 CLEANUP

Upon completion of the installation of water lines, and appurtenances, all debris and surplus materials resulting from the work shall be removed.

-- End of Section --

SECTION 02512
ASPHALT CONCRETE PAVEMENT (VDOT)

03/98

PART 1 GENERAL

1.1 REFERENCES

The following issues of the standard(s) listed below but referred to thereafter by basic designation only, forms a part of this specification to the extent indicated by the references thereto:

FEDERAL SPECIFIATIONS (FS)

FS TT-P-1952	(REV. B) Paint, Traffic and Airfield Marking, Water Emulsion Base

U. S. DEPARTMENT of TRANSPORTATION (DOT)

VIRGINIA DEPARTMENT OF TRANSPORTATION (VDOT)

VDOT	(2002) Road and Bridge Specifications, and all supplements thereto

1.2 SUBMITTALS

Government approval is required for submittals with a "GA" designation; submittals having a "FIO" designation are for information only. The following shall be submitted in accordance with Section 01300 SUBMITTAL PROCEDURES:

SD-01, DATA

Calculations; GA.

For each course, provide calculations of theoretical maximum specific gravity per VDOT. The mean of the thickness of each course of each lot. All calculations shall be delivered to the Contracting Officer (CO) by the close of business on the day following completion of the respective work.

SD-09 Reports

Asphalt Concrete Mix Design; FIO

Tests; FIO

Copies of test reports. Mix design.

1.3 TESTING

All testing and sampling of plant mixtures and the completed asphalt paved surfaces shall be performed by an independent recognized testing laboratory at the expense of the Contractor. Three copies of test reports shall be furnished to the CO.

1.4 TERMINOLOGY

All references in VDOT to "Engineer" or "Department" shall mean the CO or his authorized representative.

1.5 BARRICADES AND SIGNALS

Provide and maintain temporary signs, signals, lighting devices, markings, barricades, and channelizing and hand signaling devices, to protect personnel and new construction from damage by equipment and vehicles until the surface is approved by the CO.

PART 2 PRODUCTS

2.1 ASPHALT CONCRETE

Asphalt concrete materials and products shall comply with the Section 211 as specified in VDOT and as specified below.

2.1.1 General

Asphalt concrete pavement shall conform to the requirements for Type SM-9.5A, (surface mixture) and BM-25.0, (base mixture) as specified in VDOT except as modified herein.

2.1.2 Description

Section 211.01.

2.1.3 Materials

Section 211.02 except:

a. Aggregates which are prohibited or rejected by an agency or department of the Commonwealth of Virginia due to tendency to polish shall not be used regardless of speed limit or other material characteristics.

b. Mineral filler shall not be used.

2.2 JOB MIX FORMULA

Section 211.03.

2.3 ASPHALT CONCRETE MIXTURES

Section 211.04.

2.3.1 Surface Mixture, Type SM-9.5A

Section 211.04(a) and Tables II-13 and II-14.

2.3.2 Base mixture, type BM-25.0

Section 211.04(c) and Tables II-13 and II-14.

2.4 PREPARATION OF MIXTURES

Section 211.13.

2.5 ASPHALT CONCRETE MIX TESTS

Sections 211.05 and 211.06.

2.6 ACCEPTANCE

Section 211.08 except;

a. no price adjustment will be made for materials that do not conform to the specifications, and

b. materials that do not conform with the specifications shall be removed and replaced with new work.

2.7 STORAGE SYSTEM

Section 211.14.

2.8 MIXING PLANT

Section 211.12.

2.9 PAINT FOR PAVEMENT MARKINGS

Paint shall conform to FS TT-P-1952, white, unless indicated otherwise.

PART 3 EXECUTION

3.1 INSPECTION PRIOR TO WORK

Prior to starting each paving or related operation, the Contractor shall inspect previous work and surfaces to receive new work for compliance with the drawings and specifications, and enter their condition on the daily log. Conditions to be noted include; temperature of surfaces and ambient air, standing water or ice, presence of dust on surfaces to receive work, conformance of previous work or surfaces with drawings and specifications, and other conditions required or specified.

3.2 ASPHALT CONCRETE PAVEMENT

3.2.1 Description

Section 315.01.

3.2.2 Equipment

Section 315.03

3.2.3 Placement Limitations

Section 315.04

3.2.4 Procedures

Section 315.05 (a) thru (d) and (f) except, a brush coat of asphalt shall be applied to contact surfaces of transverse joints below 175 degrees F just before additional mixture is placed against the previously rolled material.

3.2.5 Pavement Samples

Section 315.06

3.2.6 Pavement Tolerances

3.2.6.1 Lot

Each lot of asphalt concrete pavement shall be tested and accepted or rejected. A lot shall consist of 1000 continuous square yards placed by the paving train in one day except, daily work of 1000 square yards or less shall be a single lot.

3.2.6.2 Base Course Thickness Tolerance

The thickness of the compacted base course shall be determined by the measurement of cores. A minimum of 2 core(s) shall be taken by the Contractor per lot. A compacted base course lot will be acceptable for thickness when no core measurement is less than the thickness shown by more than 0.60 inch and the mean thickness of all tests in that lot is equal to or greater than the thickness shown.

3.2.6.3 Surface Course Thickness Tolerance

The thickness of the compacted surface course shall be determined by measurement of cores. A minimum of 2 core(s) shall be taken by the Contractor per lot. A compacted surface lot will be acceptable for thickness when no core measurement is less than the thickness shown by more than 0.25 inch and the mean of the tests for that lot are equal to or greater than the thickness shown.

3.2.6.4 Surface Tolerance

Surface smoothness shall be determined by using a ten (10) foot straightedge. The variation of the surface from the testing edge of the straightedge between any two contacts with the surface shall not be more than one quarter (.25) inch. Humps and depressions exceeding the specified tolerance shall be corrected, or the defective work shall be removed and replaced with new material. The Contractor shall perform a minimum of 4 tests per lot. Measurements of the variations will be taken by use of gauges or other devices approved by the CO and recorded along with the location. Test locations will be marked on the surface with an identifying number in a manner acceptable to the CO. A lot shall be acceptable for surface smoothness when no test reveals surface variations greater than 0.25 inch.

3.2.6.5 Density (Specific Gravity) Tolerance

Density (specific gravity) of materials in place shall be determined by the use of a nuclear density gage, with printer, using the backscatter method of testing. The gage shall conform to the requirements of VTM 81 and shall be furnished and operated by the Contractor. Tests shall not be taken within 1 foot of the edge of any application width. A minimum of 2 density tests shall be performed per lot for each course and for each lift within a course. The result shall be printed by the gage and gage print provided to the Contracting Officer. Once the test(s) has been taken, the Contractor shall not be allowed to provide additional compaction to increase the density. For each course or lift within a course a lot shall be acceptable

for density (specific gravity) when no density (specific gravity) test is less than 91.5% of the maximum theoretical specific gravity per VDOT.

3.2.6.6 Corrective Actions

Lots that are not acceptable shall be rejected and the contractor shall take such corrective measures approved by the Contracting Officer (CO) to bring the work within these tolerances. Corrective measures shall comply with all requirements of the specifications.

3.3 PAVEMENT MARKING

Unless indicated otherwise, provide painted lines 4 inches in width. Apply paint after bituminous concrete has cured for a minimum of 7 days. Air and pavement temperatures shall be between 40 degrees F and 90 degrees F during application. Apply paint to clean, dry surfaces, and protect surfaces from traffic until dry. Provide uniform paint film of at least the thickness recommended by the paint manufacturer and of sufficient thickness to completely conceal pavement. The Contractor shall provide guide lines and templates to control paint application. Edges of markings shall be sharply outlined.

-- End of Section --

SECTION 02531A

SANITARY SEWERS
04/01

PART 1 GENERAL

1.1 REFERENCES

The publications listed below form a part of this specification to the extent referenced. The publications are referred to in the text by basic designation only.

AMERICAN SOCIETY FOR TESTING AND MATERIALS (ASTM)

ASTM A 123/A 123M	(2000) Zinc (Hot-Dip Galvanized) Coatings on Iron and Steel Products
ASTM C 94/C 94M	(2000) Ready-Mixed Concrete
ASTM C 150	(1999a) Portland Cement
ASTM C 270	(2000) Mortar for Unit Masonry
ASTM C 443	(1998) Joints for Circular Concrete Sewer and Culvert Pipe, Using Rubber Gaskets
ASTM C 478	(1997) Precast Reinforced Concrete Manhole Sections
ASTM C 478M	(1997) Precast Reinforced Concrete Manhole Sections (Metric)
ASTM C 828	(1998) Low-Pressure Air Test of Vitrified Clay Pipe Lines
ASTM C 924	(1998) Concrete Pipe Sewer Lines by Low-Pressure Air Test Method
ASTM C 972	(2000) Compression-Recovery of Tape Sealant
ASTM D 412	(1998a) Vulcanized Rubber and Thermoplastic Rubbers and Thermoplastic Elastomers - Tension
ASTM D 624	(2000) Tear Strength of Conventional Vulcanized Rubber and Thermoplastic Elastomers
ASTM D 1784	(1999a) Rigid Poly(Vinyl Chloride) (PVC) Compounds and Chlorinated Poly(Vinyl Chloride) (CPVC) Compounds
ASTM D 2680	(1995a)Acrylonitrile-Butadiene-Styrene (ABS) and Poly(Vinyl Chloride) (PVC) Composite Sewer Piping

ASTM D 2751	(1996a) Acrylonitrile-Butadiene-Styrene (ABS) Sewer Pipe and Fittings
ASTM D 3034	(1998) Type PSM Poly(Vinyl Chloride) (PVC) Sewer Pipe and Fittings
ASTM D 3212	(1996a) Joints for Drain and Sewer Plastic Pipes Using Flexible Elastomeric Seals
ASTM D 3350	(1999) Polyethylene Plastics Pipe and Fittings Materials
ASTM D 3753	(1999) Glass-Fiber-Reinforced Polyester Manholes
ASTM F 402	(1993; R 1999) Safe Handling of Solvent Cements, Primers, and Cleaners Used for Joining Thermoplastic Pipe and Fittings
ASTM F 714	(2000) Polyethylene (PE) Plastic pipe (SDR-PR) Based on Outside Diameter
ASTM F 794	(1999) Poly(Vinyl Chloride) (PVC) Profile Gravity Sewer Pipe and Fittings Based on Controlled Inside Diameter
ASTM F 894	(1998a) Polyethylene (PE) Large Diameter Profile Wall Sewer and Drain Pipe
ASTM F 949	(2000) Poly(Vinyl Chloride) (PVC) Corrugated Sewer Pipe with a Smooth Interior and Fittings

AMERICAN WATER WORKS ASSOCIATION (AWWA)

AWWA C110	(1998) Ductile-Iron and Gray-Iron Fittings, 3 In. Through 48 In. (75 mm through 1200 mm), for Water and Other Liquids
AWWA C111	(2000) Rubber-Gasket Joints for Ductile-Iron Pressure Pipe and Fittings
AWWA C115	(1999) Flanged Ductile-Iron Pipe with Ductile-Iron or Gray-Iron Threaded Flanges
AWWA C151	(1996) Ductile-Iron Pipe, Centrifugally Cast, for Water or Other Liquids

NATIONAL FIRE PROTECTION ASSOCIATION (NFPA)

NFPA 49	(1994) Hazardous Chemicals Data
NFPA 325-1	(1994) Fire Hazard Properties of Flammable Liquids, Gases, and Volatile Solids
NFPA 704	(1996) Identification of the Fire Hazards of Materials for Emergency Response

UNI-BELL PVC PIPE ASSOCIATION (UBPPA)

UBPPA UNI-B-6	(1990) Recommended Practice for the Low-Pressure Air Testing of Installed Sewer Pipe
UBPPA UNI-B-9	(1990; Addenda 1994) Recommended Performance Specification for Polyvinyl Chloride (PVC) Profile Wall Gravity Sewer Pipe and Fittings Based on Controlled Inside Diameter (Nominal Pipe Sizes 4-48 inch)

1.2 GENERAL REQUIREMENTS

The construction required herein shall include appurtenant structures and building sewers to points of connection with the building drains 5 feet outside the building to which the sewer system is to be connected. The Contractor shall replace damaged material and redo unacceptable work at no additional cost to the Government. Excavation and backfilling is specified in Section 02222 EXCAVATION, TRENCHING, AND BACKFILLING FOR UTILITIES SYSTEMS. Backfilling shall be accomplished after inspection by the Contracting Officer. Before, during, and after installation, plastic pipe and fittings shall be protected from any environment that would result in damage or deterioration to the material. The Contractor shall have a copy of the manufacturer's instructions available at the construction site at all times and shall follow these instructions unless directed otherwise by the Contracting Officer. Solvents, solvent compounds, lubricants, elastomeric gaskets, and any similar materials required to install the plastic pipe shall be stored in accordance with the manufacturer's recommendation and shall be discarded if the storage period exceeds the recommended shelf life. Solvents in use shall be discarded when the recommended pot life is exceeded.

1.3 SUBMITTALS

Government approval is required for submittals with a "G" designation; submittals not having a "G" designation are for information only. When used, a designation following the "G" designation identifies the office that will review the submittal for the Government. The following shall be submitted in accordance with Section 01330 SUBMITTAL PROCEDURES:

SD-07 Certificates

Portland Cement

Certificates of compliance stating the type of cement used in manufacture of concrete pipe, fittings and precast manholes.

PART 2 PRODUCTS

2.1 PIPE

Pipe shall conform to the respective specifications and other requirements specified below.

2.1.1 Plastic Pipe

Polyvinyl chloride (PVC) composite sewer piping shall conform to ASTM D 2680.

2.1.1.1 PVC Pipe

ASTM D 3034, Type PSM with a maximum SDR of 35, Size 15 inches or less in diameter. ASTM F 949 for corrugated sewer pipes with a smooth interior. UBPPA UNI-B-9 and ASTM F 794, Series 46, for ribbed sewer pipe with smooth interior, size 8 inch through 48 inch diameters. PVC shall be certified by the compounder as meeting the requirements of ASTM D 1784, cell Class 12454B. The pipe stiffness shall be greater than or equal to 735/D for cohesionless material pipe trench backfills.

2.1.1.2 High Density Polyethylene Pipe

ASTM F 894, Class 63, size 18 inch through 120 inch. ASTM F 714, size 4 inch through 48 inch. The polyethylene shall be certified by the resin producer as meeting the requirements of ASTM D 3350, cell Class 334433C. The pipe stiffness shall be greater than or equal to 1170/D for cohesionless material pipe trench backfills.

2.1.2 Ductile Iron Pipe

Pipe shall conform to AWWA C151 unless otherwise shown or specified.

2.2 REQUIREMENTS FOR FITTINGS

Fittings shall be compatible with the pipe supplied and shall have a strength not less than that of the pipe. Fittings shall conform to the respective specifications and other requirements specified below.

2.2.1 Fittings for Plastic Pipe

PVC composite sewer pipe fittings shall conform to ASTM D 2680.

2.2.1.1 Fittings for PVC Pipe

ASTM D 3034 for type PSM pipe. ASTM F 949 for corrugated sewer pipe with a smooth interior. UBPPA UNI-B-9 and ASTM F 794, Series 46, for ribbed sewer pipe with smooth interior.

2.2.1.2 Fittings for High Density Polyethylene Pipe

ASTM F 894.

2.2.2 Fittings for Ductile Iron Pipe

Mechanical fittings shall conform to AWWA C110, rated for 150 psi. Push-on fittings shall conform to AWWA C110and AWWA C111, rated for 150 psi.

2.3 JOINTS

Joints installation shall comply with the manufacturer's instructions.

2.3.1 Plastic Pipe Jointing

Flexible plastic pipe (PVC or high density polyethylene pipe) gasketed joints shall conform to ASTM D 3212.

2.3.1.1 High Density Polyethylene Pipe Jointing

Rubber gasket joints shall conform to ASTM C 443.

2.3.2 Ductile Iron Pipe Jointing

Push-on joints shall conform to AWWA C111. Mechanical joints shall conform to AWWA C111 as modified by AWWA C151. Flanged joints shall conform to AWWA C115.

2.4 BRANCH CONNECTIONS

Branch connections shall be made by use of regular fittings or solvent cemented saddles as approved. Saddles for ABS and PVC composite pipe shall conform to Figure 2 of ASTM D 2680; saddles for ABS pipe shall comply with Table 3 of ASTM D 2751; and saddles for PVC pipe shall conform to Table 4 of ASTM D 3034.

2.5 FRAMES AND COVERS

Frames and covers shall be cast iron, ductile iron or reinforced concrete. Cast iron frames and covers shall be as indicated or shall be of type suitable for the application, circular, without vent holes. The frames and covers shall have a combined weight of not less than 400 pounds. Reinforced concrete frames and covers shall be as indicated or shall conform to ASTM C 478 or ASTM C 478M. The word "Sewer" shall be stamped or cast into covers so that it is plainly visible.

2.6 STEEL LADDER

A steel ladder shall be provided where the depth of a manhole exceeds 12 feet. The ladder shall not be less than 16 inches in width, with 3/4 inch diameter rungs spaced 12 inches apart. The two stringers shall be a minimum 3/8 inch thick and 2 inches wide. Ladders and inserts shall be galvanized after fabrication in conformance with ASTM A 123/A 123M.

2.7 CEMENT MORTAR

Cement mortar shall conform to ASTM C 270, Type M with Type II cement.

2.7.1 Portland Cement

Portland cement shall conform to ASTM C 150, Type II for concrete used in concrete pipe, concrete pipe fittings, and manholes and type optional with the Contractor for cement used in concrete cradle, concrete encasement, and thrust blocking.

2.7.2 Portland Cement Concrete

Portland cement concrete shall conform to ASTM C 94/C 94M, compressive strength of 4000 psi at 28 days, except for concrete cradle and encasement or concrete blocks for manholes. Concrete used for cradle and encasement shall have a compressive strength of 2500 psiminimum at 28 days. Concrete in place shall be protected from freezing and moisture loss for 7 days.

2.8 STRUCTURES

2.8.1 Precast Reinforced Concrete Manhole Sections

Precast reinforced concrete manhole sections shall conform to ASTM C 478, except that portland cement shall be as specified herein. Joints shall be cement mortar, an approved mastic, rubber gaskets, a combination of these types; or the use of external preformed rubber joint seals and extruded rolls of rubber with mastic adhesive on one side.

2.8.2 Glass-Fiber-Reinforced Polyester Manholes

Glass-fiber-reinforced polyester manholes shall conform to ASTM D 3753.

PART 3 EXECUTION

3.1 INSTALLATION

3.1.1 Adjacent Facilities

3.1.1.1 Water Lines

Where the location of the sewer is not clearly defined by dimensions on the drawings, the sewer shall not be closer horizontally than 10 feet to a water-supply main or service line, except that where the bottom of the water pipe will be at least 12 inches above the top of the sewer pipe, the horizontal spacing may be a minimum of 6 feet. Where gravity-flow sewers cross above water lines, the sewer pipe for a distance of 10 feet on each side of the crossing shall be fully encased in concrete or shall be acceptable pressure pipe with no joint closer horizontally than 3 feet to the crossing. The thickness of the concrete encasement including that at the pipe joints shall be not less than 4 inches.

3.1.1.2 Structural Foundations

Where sewer pipe is to be installed within 3 feet of an existing or proposed building or structural foundation such as a retaining wall, control tower footing, water tank footing, or any similar structure, the sewer pipe shall be sleeved as specified above. Contractor shall ensure there is no damage to these structures, and no settlement or movement of foundations or footing.

3.1.2 Pipe Laying

a. Pipe shall be protected during handling against impact shocks and free fall; the pipe interior shall be free of extraneous material.

b. Pipe laying shall proceed upgrade with the spigot ends of bell-and-spigot pipe and tongue ends of tongue-and-groove pipe pointing in the direction of the flow. Each pipe shall be laid accurately to the line and grade shown on the drawings. Pipe shall be laid and centered so that the sewer has a uniform invert. As the work progresses, the interior of the sewer shall be cleared of all superfluous materials.

c. Before making pipe joints, all surfaces of the portions of the pipe to be joined shall be clean and dry. Lubricants, primers, and adhesives shall be used as recommended by the pipe manufacturer. The joints shall then be placed, fitted, joined, and adjusted to obtain the degree of water tightness required.

d. ABS composite pipe ends with exposed truss and filler material shall be coated with solvent weld material before making the joint

to prevent water or air passage at the joint between the inner and outer wall of the pipe.

e. Installations of solvent weld joint pipe, using ABS or PVC pipe and fittings shall be in accordance with ASTM F 402. The Contractor shall ensure adequate trench ventilation and protection for workers installing the pipe.

3.1.2.1 Caulked Joints

The packing material shall be well packed into the annular space to prevent the entrance of lead into the pipe. The remainder of the space shall be filled with molten lead that is hot enough to show a rapid change in color when stirred. Scum shall be removed before pouring. The lead shall be caulked to form a tight joint without overstraining the bell and shall have a minimum depth of 1 inch after caulking.

3.1.2.2 Trenches

Trenches shall be kept free of water and as dry as possible during bedding, laying, and jointing and for as long a period as required. When work is not in progress, open ends of pipe and fittings shall be satisfactorily closed so that no trench water or other material will enter the pipe or fittings.

3.1.2.3 Backfill

As soon as possible after the joint is made, sufficient backfill material shall be placed along the pipe to prevent pipe movement off line or grade. Plastic pipe shall be completely covered to prevent damage from ultraviolet light.

3.1.2.4 Width of Trench

If the maximum width of the trench at the top of the pipe, as specified in Section 02316 EXCAVATION, TRENCHING, AND BACKFILLING FOR UTILITIES SYSTEMS, is exceeded for any reason other than by direction, the Contractor shall install, at no additional cost to the Government, concrete cradling, pipe encasement, or other bedding required to support the added load of the backfill.

3.1.2.5 Jointing

Joints between different pipe materials shall be made as specified, using approved jointing materials.

3.1.2.6 Handling and Storage

Pipe, fittings and joint material shall be handled and stored in accordance with the manufacturer's recommendations. Storage facilities for plastic pipe, fittings, joint materials and solvents shall be classified and marked in accordance with NFPA 704, with classification as indicated in NFPA 49 and NFPA 325-1.

3.1.3 Leakage Tests

Lines shall be tested for leakage by low pressure air testing, infiltration tests or exfiltration tests, as appropriate. Low pressure air testing for vitrified clay pipes shall be as prescribed in ASTM C 828. Low pressure

air testing for concrete pipes shall be as prescribed in ASTM C 828. Low pressure air testing for PVC pipe shall be as prescribed in UBPPA UNI-B-6. Low pressure air testing procedures for other pipe materials shall use the pressures and testing times prescribed in ASTM C 828 and ASTM C 924, after consultation with the pipe manufacturer. Prior to infiltration or exfiltration tests, the trench shall be backfilled up to at least the lower half of the pipe. If required, sufficient additional backfill shall be placed to prevent pipe movement during testing, leaving the joints uncovered to permit inspection. Visible leaks encountered shall be corrected regardless of leakage test results. When the water table is 2 feet or more above the top of the pipe at the upper end of the pipeline section to be tested, infiltration shall be measured using a suitable weir or other device acceptable to the Contracting Officer. When the Contracting Officer determines that infiltration cannot be properly tested, an exfiltration test shall be made by filling the line to be tested with water so that a head of at least 2 feet is provided above both the water table and the top of the pipe at the upper end of the pipeline to be tested. The filled line shall be allowed to stand until the pipe has reached its maximum absorption, but not less than 4 hours. After absorption, the head shall be re-established. The amount of water required to maintain this water level during a 2-hour test period shall be measured. Leakage as measured by either the infiltration test or exfiltration test shall not exceed 25 gal per inch diameter per mile of pipeline per day. When leakage exceeds the maximum amount specified, satisfactory correction shall be made and retesting accomplished. Testing, correction, and retesting shall be made at no additional cost to the Government.

3.1.4 Test for Deflection

When flexible pipe is used, a deflection test shall be made on the entire length of the installed pipeline not less than 30 days after the completion of all work including the leakage test, backfill, and placement of any fill, grading, paving, concrete, or superimposed loads. Deflection shall be determined by use of a deflection device or by use of a spherical, spheroidal, or elliptical ball, a cylinder, or circular sections fused to a common shaft. The ball, cylinder, or circular sections shall have a diameter, or minor diameter as applicable, of 92.5 percent of the inside diameter of the pipe. A tolerance of plus 0.5 percent will be permitted. The ball, cylinder, or circular sections shall be of a homogeneous material throughout, shall have a density greater than 1.0 as related to water at 39.2 degrees F, and shall have a surface brinell hardness of not less than 150. The device shall be center bored and through bolted with a 1/4 inch minimum diameter steel shaft having a yield strength of 70,000 psi or more, with eyes at each end for attaching pulling cables. The eye shall be suitably backed with flange or heavy washer; a pull exerted on the opposite end of the shaft shall produce compression throughout the remote end of the ball, cylinder or circular section. Circular sections shall be spaced so that the distance from the external faces of the front and back sections shall equal or exceed the diameter of the circular section. Failure of the ball, cylinder, or circular section to pass freely through a pipe run, either by being pulled through or by being flushed through with water, shall be cause for rejection of that run. When a deflection device is used for the test in lieu of the ball, cylinder, or circular sections described, such device shall be approved prior to use. The device shall be sensitive to 1.0 percent of the diameter of the pipe being measured and shall be accurate to 1.0 percent of the indicated dimension. Installed pipe showing deflections greater than 7.5 percent of the normal diameter of the pipe, or 5 percent for RTRP and RPMP, shall be retested by a run from the opposite direction. If the retest also fails, the suspect pipe shall be replaced at

no cost to the Government.

3.2 INSTALLATION OF WYE BRANCHES

Wye branches shall be installed where sewer connections are indicated or where directed. Cutting into piping for connections shall not be done except in special approved cases. When the connecting pipe cannot be adequately supported on undisturbed earth or tamped backfill, the pipe shall be encased in concrete backfill or supported on a concrete cradle as directed. Concrete required because of conditions resulting from faulty construction methods or negligence by the Contractor shall be installed at no additional cost to the Government. The installation of wye branches in an existing sewer shall be made by a method which does not damage the integrity of the existing sewer. One acceptable method consists of removing one pipe section, breaking off the upper half of the bell of the next lower section and half of the running bell of wye section. After placing the new section, it shall be rotated so that the broken half of the bell will be at the bottom. The two joints shall then be made with joint packing and cement mortar.

3.3 MANHOLE DETAILS

3.3.1 General Requirements

Manholes shall be constructed of glass-fiber-reinforced polyester, prefabricated plastic, concrete, or precast concrete manhole sections. The invert channels shall be smooth and semicircular in shape conforming to the inside of the adjacent sewer section. Changes in direction of flow shall be made with a smooth curve of as large a radius as the size of the manhole will permit. Changes in size and grade of the channels shall be made gradually and evenly. The invert channels shall be formed directly in the concrete of the manhole base, or shall be built up with brick and mortar, or shall be half tile laid in concrete, or shall be constructed by laying full section sewer pipe through the manhole and breaking out the top half after the surrounding concrete has hardened. Pipe connections shall be made to manhole using water stops, standard O-ring joints, special manhole coupling, or shall be made in accordance with the manufacturer's recommendation. The Contractor's proposed method of connection, list of materials selected, and specials required, shall be approved prior to installation. The floor of the manhole outside the channels shall be smooth and shall slope toward the channels not less than 1 inch per foot nor more than 2 inches per foot. Free drop inside the manholes shall not exceed 18 inches, measured from the invert of the inlet pipe to the top of the floor of the manhole outside the channels; drop manholes shall be constructed whenever the free drop would otherwise be greater than 1 foot 6 inches.

3.3.2 Steel Ladder Anchorage

Ladder shall be adequately anchored to the wall by means of steel inserts spaced not more than 6 feet apart vertically, and shall be installed to provide at least 6 inches of space between the wall and the rungs. The wall along the line of the ladder shall be vertical for its entire length.

3.3.3 Jointing, Plastering and Sealing

Mortar joints shall be completely filled and shall be smooth and free from surplus mortar on the inside of the manhole. Mortar and mastic joints between precast rings shall be full-bedded in jointing compound and shall

be smoothed to a uniform surface on both the interior and exterior of the manhole. Installation of rubber gasket joints between precast rings shall be in accordance with the recommendations of the manufacturer. Precast rings may also be sealed by the use of extruded rolls of rubber with mastic adhesive on one side.

3.3.4 Setting of Frames and Covers

Unless otherwise indicated, tops of frames and covers shall be set flush with finished grade in paved areas or 2 inches higher than finished grade in unpaved areas. Frame and cover assemblies shall be sealed to manhole sections using external preformed rubber joint seals that meet the requirements of ASTM D 412 and ASTM D 624, or other methods specified in paragraph Jointing, Plastering and Sealing, unless otherwise specified.

3.3.5 External Preformed Rubber Joint Seals

External preformed rubber joint seals and extruded rolls of rubber with mastic adhesive shall meet the requirements of ASTM D 412 and ASTM C 972 to ensure conformance with paragraph Leakage Tests. The seal shall be multi-section with neoprene rubber top section and all lower sections made of Ethylene Propylene Di Monomer (EPDM) rubber with a minimum thickness of 60 mils. Each unit shall consist of a top and a bottom section and shall have mastic on the bottom of the bottom section and mastic on the top and bottom of the top section. The mastic shall be non-hardening butyl rubber sealant and shall seal to the cone/top slab of the manhole/catch basin and over the lip of the casting. One unit shall seal a casting and up to six, 2 inch adjusting rings. The bottom section shall be 12 inches in height. A 6 inch high top section will cover up to two, 2 inchadjusting rings. A 12 inch high bottom section will cover up to six, 2 inch adjusting rings. Extension sections shall cover up to two more adjusting rings. Each extension shall overlap the bottom section by 2 inches and shall be overlapped by the top section by 2 inches.

3.4 CONNECTING TO EXISTING MANHOLES

Pipe connections to existing manholes shall be made so that finish work will conform as nearly as practicable to the applicable requirements specified for new manholes, including all necessary concrete work, cutting, and shaping. The connection shall be centered on the manhole. Holes for the new pipe shall be of sufficient diameter to allow packing cement mortar around the entire periphery of the pipe but no larger than 1.5 times the diameter of the pipe. Cutting the manhole shall be done in a manner that will cause the least damage to the walls.

3.5 BUILDING CONNECTIONS

Building connections shall include the lines to and connection with the building waste drainage piping at a point approximately 5 feet outside the building, unless otherwise indicated. Where building drain piping is not installed, the Contractor shall terminate the building connections approximately 5 feet from the site of the building at a point and in a manner designated.

3.6 CLEANOUTS AND OTHER APPURTENANCES

Cleanouts and other appurtenances shall be installed where shown on the drawings or as directed by the Contracting Officer, and shall conform to the detail of the drawings.

-- End of Section --

SECTION 02571
PAVEMENT REMOVAL AND REPLACEMENT

03/98

PART 1 GENERAL

1.1 REFERENCES

The publications listed below form a part of this specification to the extent referenced. The publications are referred to in the text by the basic designation only.

AMERICAN ASSOCIATION OF STATE HIGHWAY AND TRANSPORTATION OFFICIALS (AASHTO)

AASHTO M208	1987 Cationic Emulsified Asphalt
AASHTO M226	1980 (R 1986) Viscosity Graded Asphalt Cement

AMERICAN SOCIETY FOR TESTING AND MATERIALS (ASTM)

ASTM D 698	1978 (R 1990) Moisture-Density Relations of Soils and Soil-Aggregate Mixtures, Using 5.5-lb (2.49-kg) Rammer and 12-in. (305-mm) Drop

DEPARTMENT OF TRANSPORTATION (DOT)

DOT D-6.1	1988 Uniform Traffic Control Devices for Streets and Highway

VIRGINIA DEPARTMENT OF TRANSPORTATION (VDOT)

VDOT RBS	2002 Road and Bridge Specifications, and All Supplements Thereto

1.2 SUBMITTALS

Submit the following in accordance with Section 01300 SUBMITTAL PROCEDURES.

SD-05, Design Data

Job Mix Formula FIO

Submit the mix design, including mixing temperature. The bituminous mix design shall include a certified laboratory analysis of mix composition with marshall stability value, void content, and flow. After mix design approval, job mixes shall conform to the range of tolerances specified in VDOT RBS.

SD-13, Certificates

Aggregates FIO

Bituminous Mixture FIO

1.3 QUALITY ASSURANCE

1.3.1 Modification to References

Except as specified herein, work and materials shall be in accordance with the VDOT RBS. The provisions therein for method of measurement and payment do not apply, and references to "Engineer" shall mean the Contracting Officer (CO).

1.4 BARRICADES AND SIGNALS

Provide and maintain temporary signs, signals, lighting devices, markings, barricades, and channelizing and hand signaling devices as required in accordance with DOT D-6.1 to protect personnel and new construction from damage by equipment and vehicles until the surface is approved by the CO. Work shall be conducted to permit access to all facilities at all times. Partial street closures and detours will be permissable upon approval of a street closure or detour plan.

PART 2 PRODUCTS

2.1 MATERIALS

2.1.1 Bituminous Concrete

VDOT RBS, Section 211 (Revised), Type SM-9.5A for material and mix. Provide crushed stone aggregate for the bituminous mix.

2.1.2 Stone Base Course

VDOT RBS, Section 208, Type 1, size no. 21A or 21B.

2.1.3 Bituminous Tack Coat

2.1.3.1 Cationic Emulsified Asphalts

AASHTO M208, Grades CRS-1, CSS-1, and CSS-1h. Dilute the CSS-1 and CSS-1h asphalts at the rate of one part water to one part asphalt.

2.1.3.2 Asphalt Cements

AASHTO M226, Grade AC-20.

PART 3 EXECUTION

3.1 PAVEMENT INSTALLATION

The work includes the removal of existing pavement and the provision of new pavement where trenches, pits, and other excavations are made in the existing pavement. Except as otherwise indicated, the restored pavement area shall be the same kind and thickness as previously existed, and shall match and tie into the surrounding pavement in a neat and acceptable manner.

3.2 ROADS AND PARKING AREAS

3.2.1 Pavement Removal

Make a straight line sawcut 12 inches beyond the edge of the excavation to

full pavement depth for bituminous concrete pavement and a minimum 6 inches for Portland cement concrete pavement. Portland cement concrete pavement overlaid with bituminous concrete shall be sawcut to a minimum depth of 8 inches. The pavement shall be broken up and removed, along with its base and subgrade, to the depth indicated or specified.

3.2.2 Subgrade Placement

Provide as specified in Section 02222 Excavation, Trenching, and Backfilling for Utilities Systems.

3.2.3 Stone Base Placement

Provide a stone base course a minimum of 6 inches thick, unless indicated otherwise. Place the stone base in two equal lifts, with each lift compacted to 100 percent ASTM D 698 maximum density. At the Contractor's option, bituminous concrete approved for use as the surface coat may be provided in lieu of stone base material.

3.2.4 Bituminous Concrete Placement

As specified in Section 02512, "Asphalt Concrete Pavement (VDOT)".

3.2.5 Portland Cement Concrete Pavement

Provide as specified in Section 03300. Provide reinforcing as indicated. The concrete surface shall be struck off, screeded, tamped, and finished to the same surface elevation and texture as the adjacent existing concrete. Cure concrete for 7 days. Maintain existing joint patterns.

3.2.6 Bituminous Concrete Overlay

For Portland cement concrete pavement overlaid with bituminous concrete pavement, provide the Portland cement concrete pavement and bituminous concrete pavement as specified above, except provide a tack coat at the rate of 0.10 gallon of residual asphalt per square yard on the restored Portland cement concrete base. Allow tack coat to become tacky prior to bituminous concrete placement. Apply the tack coat and bituminous concrete pavement only when the Portland cement concrete base surface is clean and dry, and has cured for a minimum of 7 days.

3.3 MATERIAL DISPOSAL

Removed pavement, base and subgrade materials shall be properly disposed of off Government property.

-- End of Section --

SECTION 02582N

ELECTRICAL MANHOLE AND HANDHOLE
09/99

PART 1 GENERAL

1.1 REFERENCES

The publications listed below form a part of this specification to the extent referenced. The publications are referred to in the text by the basic designation only.

AMERICAN ASSOCIATION OF STATE HIGHWAY AND TRANSPORTATION OFFICIALS (AASHTO)

AASHTO HB14	(1992) Highway Bridges
AASHTO M198	(1994) Joints for Circular Concrete Sewer and Culvert Pipe Using Flexible Watertight Gaskets

ACI INTERNATIONAL (ACI)

ACI 315	(1994) Details and Detailing of Concrete Reinforcement
ACI 318/318M	(1995) Building Code Requirements for Structural Concrete

AMERICAN NATIONAL STANDARDS INSTITUTE (ANSI)

ANSI C2	(1997) National Electrical Safety Code

AMERICAN SOCIETY FOR TESTING AND MATERIALS (ASTM)

ASTM C32	(1993) Sewer and Manhole Brick (Made from Clay or Shale)
ASTM C478	(1997) Precast Reinforced Concrete Manhole Sections

U.S. GENERAL SERVICES ADMINISTRATION (GSA)

FS RR-F-621	(Rev. E) Frames, Covers, Gratings, Steps, Sump and Catch Basin, Manhole

NATIONAL FIRE PROTECTION ASSOCIATION (NFPA)

NFPA 70	(1999) National Electrical Code

1.2 RELATED REQUIREMENTS

Section 16302N, "Underground Transmission and Distribution" applies to this section with additions and modifications specified herein.

1.3 SUBMITTALS

Submit the following in accordance with Section 01330, "Submittal Procedures."

SD-02 Shop Drawings

Precast manhole and handhole; G

Pulling-in irons; G

SD-03 Product Data

Precast concrete structures; G

Manhole and Handhole Frames and covers; G

Sealing material for precast manhole and handhole joints; G

Cable racks, arms and insulators; G

1.4 QUALITY ASSURANCE

1.4.1 Precast Manhole and Handhole

Provide calculations and drawings for precast manholes and handholes bearing the seal of a registered professional engineer including:

a. Material description (i.e., f'c and Fy)

b. Manufacturer's printed assembly and installation instructions

c. Design calculations

d. Reinforcing shop drawings prepared in accordance with ACI 315.

e. Plans and elevations showing opening and pulling-in iron locations and details.

PART 2 PRODUCTS

2.1 MATERIALS AND EQUIPMENT

2.1.1 Underground Structures

2.1.1.1 Precast Concrete Manholes, Risers and Tops

ASTM C478, except that the spacing of manhole steps or ladder rungs shall not exceed 16 inches. Precast units shall be the product of a manufacturer regularly engaged in the manufacture of precast concrete manholes and handholes.

2.1.1.2 Manholes and Handholes

Provide type indicated. Top, walls, and bottom shall consist of reinforced concrete. Walls and bottom shall be of monolithic concrete construction. Locate duct entrances and windows near the corners of structures to facilitate cable racking. Covers shall fit the frames without undue play. Form steel and iron to shape and size with sharp lines and angles. Castings shall be free from warp and blow holes that may impair strength or appearance. Exposed metal shall have a smooth finish and sharp lines and

arises. Provide necessary lugs, rabbets, and brackets. Set pulling-in irons and other built-in items in place before depositing concrete. Install a pulling-in iron in the wall opposite each duct line entrance. Cast the words "ELECTRIC" in the top face of power and telephone manhole covers, respectively. Cable racks, including rack arms and insulators, shall be adequate to accommodate the cable.

2.1.1.3 Metal Frames and Covers

Provide cast iron frames and covers for manholes conforming to FS RR-F-621. Provide steel frames and covers of rolled steel floor plate for handholes.

2.1.1.4 Drainage Pipe and Fittings

Cast-iron, extra strength. Drains shall be cast-iron, coated or uncoated, plain pattern, bottom outlet with perforated or slotted hinged cover.

2.1.1.5 Brick for Manhole Collar

Brick shall be sewer and manhole brick conforming to ASTM C32, Grade MS.

2.1.2 Cable Racks, Arms and Insulators

Metal portion of racks and arms shall be zinc-coated after fabrication.

2.1.2.1 Cable Racks

Wall bracket shall be 4 inches by approximately 1-1/2 by 3/16 by 48 inches long (minimum) channel steel. Slots for mounting cable rack arms shall be spaced at 8 inch intervals.

2.1.2.2 Rack Arms

Cable rack arms shall be steel or malleable iron or glass reinforced nylon and shall be of the removable type.

2.1.2.3 Insulators

Insulators for metal rack arms shall be dry-process glazed porcelain. Insulators are not required for nylon arms.

PART 3 EXECUTION

3.1 INSTALLATION

NFPA 70 and ANSI C2 .

3.1.1 Contractor Damage

The Contractor shall promptly repair any indicated utility lines or systems damaged by Contractor operations. Damage to lines or systems not indicated, which are caused by Contractor operations, shall be treated as "Changes" under the terms of the General Provisions of the contract. If the Contractor is advised in writing of the location of a nonindicated line or system, such notice shall provide that portion of the line or system with "indicated" status in determining liability for damages. In any event, the Contractor shall immediately notify the Contracting Officer of any such damage.

3.1.2 Concrete

Concrete work for electrical requirements shall be 3000 psiminimum ultimate 28-day compressive strength with one-inchminimum aggregate conforming to the requirements of Section 03300N, "Cast-In-Place Concrete".

3.1.3 Precast Concrete Construction

3.1.3.1 Precast Concrete Construction

Precast units shall be the product of a manufacturer regularly engaged in the manufacture of precast concrete products, including precast manholes and handholes.

a. General: Precast concrete structures shall have the same accessories and facilities as required for cast-in-place structures. Likewise, precast structures shall have plan area and clear heights not less than those of cast-in-place structures. Concrete materials and methods of construction shall be the same as for cast-in-place concrete construction, as modified herein. Slope in floor may be omitted provided precast sections are poured in reinforced steel forms. concrete for precast work shall have an ultimate 28-day compressive strength of not less than 4000 psi. Structures may be precast to the design and details indicated for cast-in-place construction, precast monolithically and placed as a unit, or structures may be assembled sections, designed and produced by the manufacturer in accordance with the requirements specified. Structures shall be identified with the manufacturer's name embedded in or otherwise permanently attached to an interior wall face.

b. Design for precast structures: ACI 318/318M. In the absence of detailed on-site soil information, design for the following soil parameters/site conditions:

(1) Angle of internal friction (phi): 30 degrees

(2) Unit weight of soil (dry): 110 pcf, (saturated): 130 pcf

(3) Coefficient of lateral earth pressure (Ka) = 0.33

(4) Ground water level: 3 feet below ground elevation

(5) Vertical design loads shall include full dead, superimposed dead, and live loads including a 30 percent magnification factor for impact. Live loads shall consider all types and magnitudes of vehicular (automotive, industrial, or aircraft) traffic to be encountered. Minimum design vertical load shall be for H2O highway loading per AASHTO HB14.

(6) Horizontal design loads shall include full geostatic and hydrostatic pressures for the soil parameters, water table, and depth of installation to be encountered. Also, horizontal loads imposed by adjacent structure foundations, and horizontal load components of vertical design loads, including impact, shall be considered along with a pulling-in iron design load of 6000 pounds.

(7) Each structural component shall be designed for the load combination and positioning resulting in the maximum shear and

moment for that particular component.

(8) Design shall also consider the live loads induced in the handling, installation, and backfilling of the manholes. Provide lifting devices to ensure structural integrity during handling and installation.

c. Construction: Structure top, bottom, and wall shall be of a uniform thickness of not less than 6 inches. Thin-walled knock-out panels for designed or future duct bank entrances shall not be permitted. Quantity, size, and location of duct bank entrance windows shall be as directed, and cast completely open by the precaster. Size of windows shall exceed the nominal duct bank envelope dimensions by at least 12 inches vertically and horizontally to preclude in-field window modifications made necessary by duct misalignment. However, the sides of precast windows shall be a minimum of 6 inches from the inside surface of adjacent walls, floors, or ceilings. Form the perimeter of precast window openings to have a keyed or inward flared surface to provide a positive interlock with the mating duct bank envelope. Provide welded wire fabric reinforcing through window openings for in-field cutting and flaring into duct bank envelopes. Provide additional reinforcing steel comprised of at least two No. 4 bars around window openings. Provide drain sumps for precast structures a minimum of 12 inches in diameter and 4 inches deep.

d. Joints: Provide tongue-and-groove joints on mating edges of precast components. Shiplap joints are not allowed. Design joints to firmly interlock adjoining components and to provide waterproof junctions and adequate shear transfer. Seal joints watertight using preformed plastic strip conforming to AASHTO M198, Type B. Install sealing material in strict accordance with the sealant manufacturer's printed instructions. Provide waterproofing at conduit/duct entrances into structures, and where access frame meets the top slab, provide continuous grout seal.

3.1.3.2 Metal Frames and Covers for Handholes

Frames and covers of steel shall be welded by qualified welders in accordance with standard commercial practice. Steel covers shall be rolled-steel floor plate having an approved antislip surface. Hinges shall be of galvanized steel with bronze hinge pin, 5 by 5 inches by approximately 3/16-inchthick, without screw holes, and shall be for full surface application by fillet welding. Hinges shall have nonremovable pins and five knuckles. Surfaces of plates under hinges shall be true after the removal of raised antislip surface, by grinding or other approved method.

3.1.3.3 Pulling-In Irons

Pulling-in irons shall be steel bars and cast in the walls and floors. Alternatively, pipe sleeves may be precast into the walls and floors where required to accept U-bolts or other types of pulling-in devices possessing the strengths and clearances stated herein. Final installation of pulling-in devices shall be made permanent. Cover and seal exterior projections of thru-wall type pulling-in devices with an appropriate protective coating. In the floor the irons shall be a minimum of 6 inches from the edge of the sump, and in the walls the irons shall be located within 6 inches of the projected center of the duct bank pattern or precast

window in the opposite wall. However, the puling-in iron shall not be located within 6 inches of an adjacent interior surface, or duct or precast window located within the same wall as the iron. If a pulling-in iron cannot be located directly opposite the corresponding duct bank or precast window due to this clearance limitation, locate the iron directly above or below the projected center of the duct bank pattern or precast window the minimum distance required to preserve the 6 inchclearance previously stated. In the case of directly opposing precast windows, pulling-in irons consisting of a 3 foot length of No. 5 reinforcing bar, formed into a hairpin, may be cast-in-place within the precast windows simultaneously with the end of the corresponding duct bank envelope. Irons installed in this manner shall be positioned directly in line with, or when not possible, directly above or below the projected center of the duct bank pattern entering the opposite wall, while maintaining a minimum clear distance of 3 inches from any edge of the cast-in-place duct bank envelope or any individual duct. Pulling-in irons shall have a clear projection into the structure of approximately 4 inches and shall be designed to withstand a minimum pulling-in load of 6000 pounds. Irons shall be hot-dipped galvanized after fabrication.

3.1.3.4 Cable Racks

Cable racks, arm and insulators shall be sufficient to accommodate the cables. Racks in power manholes and handholes shall be spaced not more than 3 feet apart, and each manhole and handhole wall shall be provided with a minimum of two racks. Racks in signal manholes and handholes shall be spaced not more than 16 1/2 inchesapart with the end rack being no further than 12 inches from the adjacent wall. Rack arm length shall be a minimum of 8 inches and a maximum of 12 inches. Methods of anchoring cable racks shall be as follows:

a. Provide a 5/8 inch diameter by 5-inch long anchor bolt with 3-inch foot cast in structure wall with 2 inch protrusion of threaded portion of bolt into structure. Provide 5/8 inchsteel square head nut on each anchor bolt. Coat threads of anchor bolts with white lead immediately prior to installing nuts.

b. Provide concrete channel insert with a minimum load rating of 800 pounds per foot. Insert channel shall be steel of the same length as "vertical rack channel;" channel insert shall be cast flush in structure wall. Provide 5/8 inch steel nuts in channel insert type receive 5/8 inch diameter by 3 inch long steel, square head anchor bolts.

c. Provide concrete "spot insert" at each anchor bolt location, cast flush in structure wall. Each insert shall have minimum 800 pound load rating. Provide 5/8 inch diameter by 3 inch long steel, square head anchor bolt at each anchor point. Coat threads of anchor bolts with white lead immediately prior to installing bolts.

3.1.3.5 Grounding in Manholes and Handholes

Provide a No. 1/0 AWG bare copper cable on each manhole and handhole sidewall. The cables shall be exothermically welded to the ground rod in the manhole and handhole, and shall be accessible for future grounding requirements.

3.1.3.6 Precast Manholes and Handholes Installation

Commercial precast assembly shall be set on 6 inches of level, 90 percent compacted granular fill, 3/4 to one inch size, extending 12 inches beyond the manhole or handhole on each side. Granular fill shall be compacted by a minimum of four passes with a plate type vibrator. Installation shall conform to the manufacturer's instructions.

3.1.3.7 Field Painting

Cast-iron frames and covers not buried in masonry shall be cleaned of mortar, rust, grease, dirt and other deleterious materials, and given a coat of bituminous paint. Steel frames not buried in masonry and steel covers shall be cleaned of mortar, dirt and grease by an approved blasting process. Surfaces that cannot be cleaned satisfactorily by blasting shall be cleaned to bare metal by wire brushing or other mechanical means. Surfaces contaminated with rust, dirt, oil, grease, or other contaminants shall be washed with solvents until thoroughly cleaned. Immediately after cleaning, surfaces shall be given a crystalline phosphate coating. As soon as practicable after the pretreatment coating has dried, treated surfaces shall be primed with a coat of zinc-molybdate primer and one coat of synthetic exterior gloss enamel.

3.1.4 Earthwork for Utilities

Section 02316A, "Excavation, Trenching and Backfilling, for Utilities."

-- End of Section --

SECTION 02630A

STORM-DRAINAGE SYSTEM
03/00

PART 1 GENERAL

1.1 REFERENCES

The publications listed below form a part of this specification to the extent referenced. The publications are referred to in the text by basic designation only.

AMERICAN ASSOCIATION OF STATE HIGHWAY AND TRANSPORTATION OFFICIALS (AASHTO)

AASHTO M 198	(1998) Joints for Circular Concrete Sewer and Culvert Pipe Using Flexible Watertight Gaskets

AMERICAN SOCIETY FOR TESTING AND MATERIALS (ASTM)

ASTM A 48	(1994a) Gray Iron Castings
ASTM A 123/A 123M	(1997ael) Zinc (Hot-Dip Galvanized) Coatings on Iron and Steel Products
ASTM A 536	(1999el) Ductile Iron Castings
ASTM B 26/B 26M	(1998) Aluminum-Alloy Sand Castings
ASTM C 32	(1999el) Sewer and Manhole Brick (Made from Clay or Shale)
ASTM C 55	(1999) Concrete Brick
ASTM C 62	(1997a) Building Brick (Solid Masonry Units Made from Clay or Shale)
ASTM C 76	(1999) Reinforced Concrete Culvert, Storm Drain, and Sewer Pipe
ASTM C 231	(1997el) Air Content of Freshly Mixed Concrete by the Pressure Method
ASTM C 270	(1997) Mortar for Unit Masonry
ASTM C 443	(1998) Joints for Circular Concrete Sewer and Culvert Pipe, Using Rubber Gaskets
ASTM C 478	(1997) Precast Reinforced Concrete Manhole Sections
ASTM C 828	(1998) Low-Pressure Air Test of Vitrified Clay Pipe Lines

ASTM C 924	(1998) Concrete Pipe Sewer Lines by Low-Pressure Air Test Method
ASTM C 1103	(1994) Joint Acceptance Testing of Installed Precast Concrete Pipe Sewer Lines
ASTM D 1557	(1998) Laboratory Compaction Characteristics of Soil Using Modified Effort (56,000 ft-lbf/cu. ft. (2,700 kN-m/cu.m.))
ASTM D 1751	(1999) Preformed Expansion Joint Filler for Concrete Paving and Structural Construction (Nonextruding and Resilient Bituminous Types)
ASTM D 1752	(1984; R 1996el) Preformed Sponge Rubber and Cork Expansion Joint Fillers for Concrete Paving and Structural Construction
ASTM D 2167	(1994) Density and Unit Weight of Soil in Place by the Rubber Balloon Method
ASTM D 2922	(1996el) Density of Soil and Soil-Aggregate in Place by Nuclear Methods (Shallow Depth)
ASTM D 3017	(1988; R 1996el) Water Content of Soil and Rock in Place by Nuclear Methods (Shallow Depth)
ASTM F 1417	(1992; R 1998) Installation Acceptance of Plastic Gravity Sewer Lines Using Low-Pressure Air

VIRGINIA DEPARTMENT OF TRANSPORTATION (VDOT)

VDOT	2002 Road and Bridge Specifications, and All Supplements Thereto

1.2 SUBMITTALS

Government approval is required for submittals with a "G" designation; submittals not having a "G" designation are for information only. When used, a designation following the "G" designation identifies the office that will review the submittal for the Government. The following shall be submitted in accordance with Section 01330 SUBMITTAL PROCEDURES:

SD-07 Certificates

Pipeline Testing
Hydrostatic Test on Watertight Joints
Frame and Cover for Gratings
Gaskets

Certified copies of test reports demonstrating conformance to applicable pipe specifications, before pipe is installed. Certification on the ability of frame and cover or gratings to carry the imposed live load.

Certification that both culvert materials and installation methods conform to VDOT requirements.

1.3 DELIVERY, STORAGE, AND HANDLING

1.3.1 Delivery and Storage

Materials delivered to site shall be inspected for damage, unloaded, and stored with a minimum of handling. Materials shall not be stored directly on the ground. The inside of pipes and fittings shall be kept free of dirt and debris. Before, during, and after installation, plastic pipe and fittings shall be protected from any environment that would result in damage or deterioration to the material. The Contractor shall have a copy of the manufacturer's instructions available at the construction site at all times and shall follow these instructions unless directed otherwise by the Contracting Officer. Solvents, solvent compounds, lubricants, elastomeric gaskets, and any similar materials required to install plastic pipe shall be stored in accordance with the manufacturer's recommendations and shall be discarded if the storage period exceeds the recommended shelf life. Solvents in use shall be discarded when the recommended pot life is exceeded.

1.3.2 Handling

Materials shall be handled in a manner that ensures delivery to the trench in sound, undamaged condition. Pipe shall be carried to the trench, not dragged.

PART 2 PRODUCTS

2.1 PIPE FOR CULVERTS AND STORM DRAINS

Pipe for culverts and storm drains shall be of the sizes indicated and shall conform to the requirements specified.

2.1.1 Concrete Pipe

ASTM C 76, Class III.

2.1.2 Box Culverts

VDOT Section 302. Joints shall be made watertight.

2.2 DRAINAGE STRUCTURES

2.3 MISCELLANEOUS MATERIALS

2.3.1 Concrete

Unless otherwise specified, concrete and reinforced concrete shall conform to the requirements for 4000 psi concrete under Section 03300 CAST-IN-PLACE STRUCTURAL CONCRETE. The concrete mixture shall have air content by volume of concrete, based on measurements made immediately after discharge from the mixer, of 5 to 7 percent when maximum size of coarse aggregate exceeds 1-1/2 inches. Air content shall be determined in accordance with ASTM C 231. The concrete covering over steel reinforcing shall not be less than 1 inch thick for covers and not less than 1-1/2 inches thick for walls and flooring. Concrete covering deposited directly against the ground shall

have a thickness of at least 3 inches between steel and ground. Expansion-joint filler material shall conform to ASTM D 1751, or ASTM D 1752, or shall be resin-impregnated fiberboard conforming to the physical requirements of ASTM D 1752.

2.3.2 Mortar

Mortar for pipe joints, connections to other drainage structures, and brick or block construction shall conform to ASTM C 270, Type M, except that the maximum placement time shall be 1 hour. The quantity of water in the mixture shall be sufficient to produce a stiff workable mortar. Water shall be clean and free of harmful acids, alkalies, and organic impurities. The mortar shall be used within 30 minutes after the ingredients are mixed with water. The inside of the joint shall be wiped clean and finished smooth. The mortar head on the outside shall be protected from air and sun with a proper covering until satisfactorily cured.

2.3.3 Brick

Brick shall conform to ASTM C 62, Grade SW; ASTM C 55, Grade S-I or S-II; or ASTM C 32, Grade MS. Mortar for jointing and plastering shall consist of one part portland cement and two parts fine sand. Lime may be added to the mortar in a quantity not more than 25 percent of the volume of cement. The joints shall be filled completely and shall be smooth and free from surplus mortar on the inside of the structure. Brick structures shall be plastered with 1/2 inch of mortar over the entire outside surface of the walls. For square or rectangular structures, brick shall be laid in stretcher courses with a header course every sixth course. For round structures, brick shall be laid radially with every sixth course a stretcher course.

2.3.4 Precast Reinforced Concrete Manholes

Precast reinforced concrete manholes shall conform to ASTM C 478. Joints between precast concrete risers and tops shall be made with flexible watertight, rubber-type gaskets meeting the requirements of paragraph Joints.

2.3.5 Frame and Cover for Gratings

Frame and cover for gratings shall be cast gray iron, ASTM A 48, Class 35B; cast ductile iron, ASTM A 536, Grade 65-45-12; or cast aluminum, ASTM B 26/B 26M, Alloy 356.OT6. Weight, shape, size, and waterway openings for grates and curb inlets shall be as indicated on the plans.

2.3.6 Joints

2.3.6.1 Flexible Watertight Joints

a. Materials: Flexible watertight joints shall be made with plastic or rubber-type gaskets for concrete pipe. The design of joints and the physical requirements for plastic gaskets shall conform to AASHTO M 198, and rubber-type gaskets shall conform to ASTM C 443. Gaskets shall have not more than one factory-fabricated splice, except that two factory-fabricated splices of the rubber-type gasket are permitted if the nominal diameter of the pipe being gasketed exceeds 54 inches.

b. Test Requirements: Watertight joints shall be tested and shall

meet test requirements of paragraph HYDROSTATIC TEST ON WATERTIGHT JOINTS. Rubber gaskets shall comply with the requirements of ASTM C 443. Certified copies of test results shall be delivered to the Contracting Officer before gaskets or jointing materials are installed. Alternate types of watertight joint may be furnished, if specifically approved.

2.4 STEEL LADDER

Steel ladder shall be provided where the depth of the manhole exceeds 12 feet. These ladders shall be not less than 16 inches in width, with 3/4 inch diameter rungs spaced 12 inches apart. The two stringers shall be a minimum 3/8 inch thick and 2-1/2 inches wide. Ladders and inserts shall be galvanized after fabrication in conformance with ASTM A 123/A 123M.

2.5 RESILIENT CONNECTORS

Flexible, watertight connectors used for connecting pipe to manholes and inlets shall conform to ASTM C 923.

2.6 HYDROSTATIC TEST ON WATERTIGHT JOINTS

2.6.1 Concrete Pipe

A hydrostatic test shall be made on the watertight joint types as proposed. Only one sample joint of each type needs testing; however, if the sample joint fails because of faulty design or workmanship, an additional sample joint may be tested. During the test period, gaskets or other jointing material shall be protected from extreme temperatures which might adversely affect the performance of such materials. Performance requirements for joints in concrete pipe shall conform to AASHTO M 198 or ASTM C 443.

PART 3 EXECUTION

3.1 EXCAVATION FOR PIPE CULVERTS, STORM DRAINS, AND DRAINAGE STRUCTURES

Excavation of trenches, and for appurtenances and backfilling for culverts and storm drains, shall be in accordance with the applicable portions of Section 02222 "Excavation, Trenching, and Backfilling for Utilities Systems"d and the requirements specified below.

3.1.1 Trenching

As specified in Section 02222, "Excavation, Trenching, and Backfilling for Utilities Systems".

3.1.2 Removal of Unstable Material

Where wet or otherwise unstable soil incapable of properly supporting the pipe, as determined by the Contracting Officer, is unexpectedly encountered in the bottom of a trench, such material shall be removed to the depth required and replaced to the proper grade with select granular material, compacted as provided in paragraph BACKFILLING. When removal of unstable material is due to the fault or neglect of the Contractor in his performance of shoring and sheeting, water removal, or other specified requirements, such removal and replacement shall be performed at no additional cost to the government.

3.2 BEDDING

The bedding surface for the pipe shall provide a firm foundation of uniform density throughout the entire length of the pipe.

3.2.1 Concrete Pipe Requirements

When no bedding class is specified or detailed on the drawings, concrete pipe shall be bedded in a soil foundation accurately shaped and rounded to conform to the lowest one-fourth of the outside portion of circular pipe or to the lower curved portion of pipe arch for the entire length of the pipe or pipe arch. When necessary, the bedding shall be tamped. Bell holes and depressions for joints shall be not more than the length, depth, and width required for properly making the particular type of joint.

3.2.2 Box Culverts

As specified in VDOT Section 302, except bedding material shall consist of 12 inches of VDOT No. 57 aggregate.

3.3 PLACING PIPE

Each pipe shall be thoroughly examined before being laid; defective or damaged pipe shall not be used. Pipelines shall be laid to the grades and alignment indicated. Proper facilities shall be provided for lowering sections of pipe into trenches. Pipe shall not be laid in water, and pipe shall not be laid when trench conditions or weather are unsuitable for such work. Diversion of drainage or dewatering of trenches during construction shall be provided as necessary.

3.3.1 Concrete Pipe

Laying shall proceed upgrade with spigot ends of bell-and-spigot pipe and tongue ends of tongue-and-groove pipe pointing in the direction of the flow.

3.3.2 Box Culverts

As specified in VDOT Section 302.

3.4 JOINTING

3.4.1 Concrete Pipe

3.4.1.1 Flexible Watertight Joints

Gaskets and jointing materials shall be as recommended by the particular manufacturer in regard to use of lubricants, cements, adhesives, and other special installation requirements. Surfaces to receive lubricants, cements, or adhesives shall be clean and dry. Gaskets and jointing materials shall be affixed to the pipe not more than 24 hours prior to the installation of the pipe, and shall be protected from the sun, blowing dust, and other deleterious agents at all times. Gaskets and jointing materials shall be inspected before installing the pipe; any loose or improperly affixed gaskets and jointing materials shall be removed and replaced. The pipe shall be aligned with the previously installed pipe, and the joint pushed home. If, while the joint is being made the gasket becomes visibly dislocated the pipe shall be removed and the joint remade.

3.5 DRAINAGE STRUCTURES

3.5.1 Manholes and Inlets

Construction shall be of reinforced concrete, precast reinforced concrete, complete with frames and covers or gratings; and with fixed galvanized steel ladders. Pipe connections to concrete manholes and inlets shall be made with flexible, watertight connectors.

3.6 STEEL LADDER INSTALLATION

Ladder shall be adequately anchored to the wall by means of steel inserts spaced not more than 6 feet vertically, and shall be installed to provide at least 6 inches of space between the wall and the rungs. The wall along the line of the ladder shall be vertical for its entire length.

3.7 BACKFILLING

3.7.1 Backfilling Pipe in Trenches

After the pipe has been properly bedded, selected material from excavation or borrow, at a moisture content that will facilitate compaction, shall be placed along both sides of pipe in layers not exceeding 6 inches in compacted depth. The backfill shall be brought up evenly on both sides of pipe for the full length of pipe. The fill shall be thoroughly compacted under the haunches of the pipe. Each layer shall be thoroughly compacted with mechanical tampers or rammers. This method of filling and compacting shall continue until the fill has reached an elevation of at least 12 inches above the top of the pipe. The remainder of the trench shall be backfilled and compacted by spreading and rolling or compacted by mechanical rammers or tampers in layers not exceeding 6 inches. Tests for density shall be made as necessary to ensure conformance to the compaction requirements specified below. Where it is necessary, in the opinion of the Contracting Officer, that sheeting or portions of bracing used be left in place, the contract will be adjusted accordingly. Untreated sheeting shall not be left in place beneath structures or pavements.

3.7.2 Movement of Construction Machinery

When compacting by rolling or operating heavy equipment parallel with the pipe, displacement of or injury to the pipe shall be avoided. Movement of construction machinery over a culvert or storm drain at any stage of construction shall be at the Contractor's risk. Any damaged pipe shall be repaired or replaced.

3.7.3 Compaction

3.7.3.1 General Requirements

Cohesionless materials include gravels, gravel-sand mixtures, sands, and gravelly sands. Cohesive materials include clayey and silty gravels, gravel-silt mixtures, clayey and silty sands, sand-clay mixtures, clays, silts, and very fine sands. When results of compaction tests for moisture-density relations are recorded on graphs, cohesionless soils will show straight lines or reverse-shaped moisture-density curves, and cohesive soils will show normal moisture-density curves.

3.7.3.2 Minimum Density

Backfill over and around the pipe and backfill around and adjacent to drainage structures shall be compacted at the approved moisture content to

the following applicable minimum density, which will be determined as specified below.

a. Under paved roads, streets, parking areas, and similar-use pavements including adjacent shoulder areas, the density shall be not less than 90 percent of maximum density for cohesive material and 95 percent of maximum density for cohesionless material, up to the elevation where requirements for pavement subgrade materials and compaction shall control.

b. Under unpaved or turfed traffic areas, density shall not be less than 90 percent of maximum density for cohesive material and 95 percent of maximum density for cohesionless material.

c. Under nontraffic areas, density shall be not less than that of the surrounding material.

3.7.4 Determination of Density

Testing shall be the responsibility of the Contractor and performed at no additional cost to the Government. Testing shall be performed by an approved commercial testing laboratory or by the Contractor subject to approval. Tests shall be performed in sufficient number to ensure that specified density is being obtained. Laboratory tests for moisture-density relations shall be made in accordance with ASTM D 1557 except that mechanical tampers may be used provided the results are correlated with those obtained with the specified hand tamper. Field density tests shall be determined in accordance with ASTM D 2167 or ASTM D 2922. When ASTM D 2922 is used, the calibration curves shall be checked and adjusted, if necessary, using the sand cone method as described in paragraph Calibration of the referenced publications. ASTM D 2922 results in a wet unit weight of soil and when using this method ASTM D 3017 shall be used to determine the moisture content of the soil. The calibration curves furnished with the moisture gauges shall be checked along with density calibration checks as described in ASTM D 3017 or ASTM D 2922. Test results shall be furnished the Contracting Officer. The calibration checks of both the density and moisture gauges shall be made at the beginning of a job on each different type of material encountered and at intervals as directed.

3.8 PIPELINE TESTING

Lines shall be tested for leakage by low pressure air or water testing or exfiltration tests, as appropriate. Low pressure air testing for vitrified clay pipes shall conform to ASTM C 828. Low pressure air testing for concrete pipes shall conform to ASTM C 924. Low pressure air testing for plastic pipe shall conform to ASTM F 1417. Low pressure air testing procedures for other pipe materials shall use the pressures and testing times prescribed in ASTM C 828 or ASTM C 924, after consultation with the pipe manufacturer. Testing of individual joints for leakage by low pressure air or water shall conform to ASTM C 1103. Prior to exfiltration tests, the trench shall be backfilled up to at least the lower half of the pipe. If required, sufficient additional backfill shall be placed to prevent pipe movement during testing, leaving the joints uncovered to permit inspection. Visible leaks encountered shall be corrected regardless of leakage test results. When the water table is 2 feet or more above the top of the pipe at the upper end of the pipeline section to be tested, infiltration shall be measured using a suitable weir or other device acceptable to the Contracting Officer. An exfiltration test shall be made by filling the line to be tested with water so that a head of at least 2

feet is provided above both the water table and the top of the pipe at the upper end of the pipeline to be tested. The filled line shall be allowed to stand until the pipe has reached its maximum absorption, but not less than 4 hours. After absorption, the head shall be reestablished. The amount of water required to maintain this water level during a 2-hour test period shall be measured. Leakage as measured by the exfiltration test shall not exceed 0.2 gallons per inch in diameter per 100 feet of pipeline per hour. When leakage exceeds the maximum amount specified, satisfactory correction shall be made and retesting accomplished. Testing, correcting, and retesting shall be made at no additional cost to the Government.

-- End of Section --

SECTION 02713A

BITUMINOUS BASE COURSE
08/97

PART 1 GENERAL

1.1 REFERENCES

The publications listed below form a part of this specification to the extent referenced. The publications are referred to in the text by basic designation only.

AMERICAN SOCIETY FOR TESTING AND MATERIALS (ASTM)

ASTM D 242	(1995) Mineral Filler for Bituminous Paving Mixtures
ASTM D 4318	(1998) Liquid Limit, Plastic Limit, and Plasticity Index of Soils

VIRGINIA DEPARTMENT OF TRANSPORTATION

VDOT RBS	(2002) Road and Bridge Specifications

1.2 SUBMITTALS

Government approval is required for submittals with a "G" designation; submittals not having a "G" designation are for information only. When used, a designation following the "G" designation identifies the office that will review the submittal for the Government. The following shall be submitted in accordance with Section 01330 SUBMITTAL PROCEDURES:

SD-06 Test Reports

Sampling and testing

Copies of field tests results within 24 hours after the tests are performed.

SD-07 Certificates

Certificate of Compliance with VDOT Specifications.

1.3 SAMPLING AND TESTING

1.3.1 Field Sampling of Pavements and Mixtures

The type, size, and locations of samples will be approved. The Contractor shall furnish all tools, labor, and materials for cutting samples and will be responsible for replacing pavement to meet specified requirements. Samples of finished pavement shall be cut at the rate of one sample per 2000 square yards of finished pavement.

1.4 WEATHER LIMITATIONS

Bituminous courses shall not be constructed when the underlying course contains free surface water. Unless otherwise directed, asphalt courses

shall not be constructed when temperature of the surface of the underlying course is below 40 degrees F.

PART 2 PRODUCTS

2.1 AGGREGATES

Aggregates shall consist of crushed stone, crushed slag, crushed gravel screenings, sand, and mineral filler, as required. The portion of these materials retained on the No. 4 sieve shall be known as coarse aggregate; the portion passing the No. 4 sieve and retained on the No. 200 sieve, as fine aggregate; and the portion passing the No. 200 sieve, as mineral filler.

2.1.1 Coarse Aggregates

VDOT RBS Section 203.

2.1.2 Fine Aggregates

VDOT RBS Section 202. Fine aggregates shall consist of clean, durable natural sands; manufactured sands prepared by crushing stone, slag, or gravel, or any combination of natural and manufactured sands. Natural sands shall consist of grains of clean, hard, durable rock.

2.1.3 Mineral Filler

Mineral filler shall conform to ASTM D 242.

2.1.4 Liquid Limit and Plasticity Index

Liquid limit and plasticity index shall be measured in accordance with ASTM D 4318. Requirements stated herein shall apply to any aggregate component that is blended to meet the required gradation and also to the aggregate in the completed base course. The portion of the aggregate passing the No. 40 sieve shall be either nonplastic or have a liquid limit not greater than 25 and a plasticity index not greater than 5.

2.1.5 Sources of Aggregates

Sources of aggregates shall be selected well in advance of the time the material will be required in the work. If a previously developed source is selected, test results shall be submitted with evidence that central plant hot-mix bituminous pavements constructed with the aggregates have had a satisfactory service record of at least 5 years under similar climatic conditions. An inspection of the producer's operation may be made. When new sources are developed, the Contractor shall indicate the sources and submit samples for approval and a plan for operation well in advance of starting production. Proposed sources may be inspected. The Contractor shall make such tests and other investigations as necessary to determine whether or not aggregates meeting the requirements specified can be produced from the proposed sources. Inspection of the source of aggregate does not relieve the Contractor of the responsibility for delivery at the jobsite of aggregates that meet requirements specified herein.

2.2 BITUMINOUS MATERIALS

Sources where bituminous materials are obtained shall be selected in advance of time when materials will be required in the work, and test

results shall be submitted for approval not less than 20 days before such material is required for use in the work.

2.2.1 Asphalt Cement

VDOT RBS Section 210.

2.2.2 Quality Control

In addition to initial qualification testing of bituminous materials, samples shall be taken before and during construction when shipments of bituminous materials are received or when necessary to assure that some condition of handling or storage has not been detrimental to the bituminous material.

2.3 AGGREGATE GRADATION

VDOT RBS Section 211.

2.4 COMPOSITION OF MIXTURE

VDOT RBS Section 211.

PART 3 EXECUTION

3.1 CONDITIONING OF UNDERLYING COURSE

Prior to placing the bituminous base course, the underlying surface shall be cleaned of foreign or objectionable matter. The condition of the underlying course will be inspected and approved.

3.2 TRANSPORTATION OF BITUMINOUS MIXTURE

Transportation of bituminous mixture from the paving plant to the site shall be in trucks having tight, clean, smooth beds lightly coated with an approved releasing agent to prevent adhesion of mixture to truck bodies. Excessive releasing agent will be drained prior to loading. Each load shall be covered with canvas or other approved material of ample size to protect mixture from weather and prevent loss of heat. Loads that have crusts of cold, unworkable material or have become wet by rain will be rejected. Hauling over freshly placed material will not be permitted.

3.3 PLACING

VDOT RBS Section 315.

3.3.1 Hand Spreading in Lieu of Machine Spreading

In areas where the use of machine spreading is impractical, the mixture shall be spread by hand. Spreading shall be in a manner to prevent segregation. The mixture shall be spread uniformly with hot rakes in a loose layer of thickness that, when compacted, will conform to the required grade and thickness.

3.4 GRADE AND SURFACE-SMOOTHNESS REQUIREMENTS

Finished surfaces of bituminous base courses, when tested as specified below, shall conform to the gradeline and elevations shown and to surface-smoothness requirements specified.

3.4.1 Plan Grade

Finished surfaces shall conform, within tolerances specified, to the lines, grades, and cross sections indicated. Finished surfaces of runways, taxiways, and aprons shall vary not more than 0.04 foot from the plan gradeline or elevation established and approved at the site of work. Finished surfaces of nonaircraft traffic areas, such as blast pads and stabilized shoulders, shall vary not more than 0.06 foot from the plan gradeline and elevation established and approved at the site. Finished surfaces at the juncture with other pavements shall coincide with finished surfaces of abutting pavements. The 0.04-and 0.06-foot deviations from the plan gradeline and elevation will not be permitted in areas of pavements where closer conformance with plan grade and elevation is required for the proper functioning of drainage and other appurtenant structures involved.

3.4.2 Surface Smoothness

Finished surfaces shall not deviate from the testing edge of a 12 foot straightedge more than 1/4 inch in any direction.

3.4.3 Equipment

The Contractor shall furnish and maintain at the site, in good condition, one straightedge for each bituminous paver for use in testing the finished surface. Straightedges shall be aluminum and have blades of box or box-girder cross section with flat bottom reinforced to insure rigidity and accuracy. Straightedges shall have handles to facilitate movement on pavement.

3.5 COMPACTION OF MIXTURE

VDOT RBS Section 315.

3.6 JOINTS

3.6.1 General

Joints between old and new pavements or between successive day's work, or joints that have become cold because of delay, shall be made carefully to insure continuous bond between old and new sections of course. All joints shall have the same texture, density, and smoothness as other sections of the course. Contact surfaces of previously constructed pavements that have become coated with dust, sand, or other objectionable material shall be cleaned by brushing or cut back with approved power saw, as directed. The surface against which new material is placed shall be sprayed with a thin, uniform coat of bituminous material conforming to requirements of Section 02748 BITUMINOUS TACK AND PRIME COATS. The material shall be applied far enough in advance of placement of the fresh mixture to insure adequate curing. Care shall be taken to prevent damage or contamination of sprayed surface.

3.6.2 Transverse Joints

The roller shall pass over the unprotected end of freshly placed mixture only when placing of the course is discontinued or when delivery of the mixture is interrupted to the extent that the unrolled material may become cold. In all cases, the edge of the previously placed course shall be cut back to expose an even, vertical surface for the full thickness of the

course. In continuing placement of the strip, the mechanical spreader shall be positioned on the transverse joint so that sufficient hot mixture will be spread to obtain a joint after rolling that conforms to the required density and smoothness specified herein.

3.6.3 Longitudinal Joints

Edges of a previously placed strip that have cooled or are irregular, honeycombed, poorly compacted, damaged, or otherwise defective, and unsatisfactory sections of the joint shall be cut back to expose a clean, sound surface for the full thickness of the course as directed.

3.7 EDGES OF PAVEMENT

Bulges adjacent to shoulders shall be trimmed neatly to the line.

3.8 PROTECTION OF PAVEMENT

After final rolling of the pavement, no vehicular traffic of any kind shall be permitted until the pavement has cooled to ambient temperature.

-- End of Section --

SECTION 02741A

HOT-MIX ASPHALT (HMA) FOR ROADS
09/99

PART 1 GENERAL

1.1 REFERENCES

The publications listed below form a part of this specification to the extent referenced. The publications are referred to in the text by basic designation only.

AMERICAN SOCIETY FOR TESTING AND MATERIALS (ASTM)

ASTM D 242	(1995) Mineral Filler for Bituminous Paving Mixtures
ASTM D 2950	(1997) Density of Bituminous Concrete in Place by Nuclear Method

VIRGINIA DEPARTMENT OF TRANSPORTATIONOrg

VDOT RBS	(2002) Road and Bridge Specifications

1.2 DESCRIPTION OF WORK

The work shall consist of pavement courses composed of mineral aggregate and asphalt material heated and mixed in a central mixing plant and placed on a prepared course. HMA designed and constructed in accordance with this section shall conform to the lines, grades, thicknesses, and typical cross sections shown on the drawings. Each course shall be constructed to the depth, section, or elevation required by the drawings and shall be rolled, finished, and approved before the placement of the next course.

1.3 SUBMITTALS

Government approval is required for submittals with a "G" designation; submittals not having a "G" designation are for information only. When used, a designation following the "G" designation identifies the office that will review the submittal for the Government. The following shall be submitted in accordance with Section 01330 SUBMITTAL PROCEDURES:

SD-06 Test Reports

Aggregates; G.
QC Monitoring.
Aggregate and QC test results.

SD-07 Certificates

Asphalt Concrete

Certification of compliance.

1.4 HAULING EQUIPMENT

Trucks used for hauling hot-mix asphalt shall have tight, clean, and smooth metal beds. To prevent the mixture from adhering to them, the truck beds shall be lightly coated with a minimum amount of paraffin oil, lime solution, or other approved material. Petroleum based products shall not be used as a release agent. Each truck shall have a suitable cover to protect the mixture from adverse weather. When necessary to ensure that the mixture will be delivered to the site at the specified temperature, truck beds shall be insulated or heated and covers (tarps) shall be securely fastened.

1.5 ASPHALT PAVERS

Asphalt pavers shall be self-propelled, with an activated screed, heated as necessary, and shall be capable of spreading and finishing courses of hot-mix asphalt which will meet the specified thickness, smoothness, and grade. The paver shall have sufficient power to propel itself and the hauling equipment without adversely affecting the finished surface.

1.5.1 Receiving Hopper

The paver shall have a receiving hopper of sufficient capacity to permit a uniform spreading operation. The hopper shall be equipped with a distribution system to place the mixture uniformly in front of the screed without segregation. The screed shall effectively produce a finished surface of the required evenness and texture without tearing, shoving, or gouging the mixture.

1.6 ROLLERS

Rollers shall be in good condition and shall be operated at slow speeds to avoid displacement of the asphalt mixture. The number, type, and weight of rollers shall be sufficient to compact the mixture to the required density while it is still in a workable condition. Equipment which causes excessive crushing of the aggregate shall not be used.

1.7 WEATHER LIMITATIONS

The hot-mix asphalt shall not be placed upon a wet surface or when the surface temperature of the underlying course is less than specified in Table 1. The temperature requirements may be waived by the Contracting Officer, if requested; however, all other requirements, including compaction, shall be met.

Table 1. Surface Temperature Limitations of Underlying Course

Mat Thickness, inches	Degrees F
3 or greater	40
Less than 3	45

PART 2 PRODUCTS

2.1 AGGREGATES

Aggregates shall consist of crushed stone, crushed gravel, crushed slag, screenings, natural sand and mineral filler, as required. The portion of material retained on the No. 4 sieve is coarse aggregate. The portion of material passing the No. 4 sieve and retained on the No. 200 sieve is fine aggregate. The portion passing the No. 200 sieve is defined as mineral filler. All aggregate test results and samples shall be submitted to the Contracting Officer at least 14 days prior to start of construction.

2.1.1 Coarse Aggregate

VDOT RBS Section 203.

2.1.2 Mineral Filler

Mineral filler shall be nonplastic material meeting the requirements of ASTM D 242.

2.2 ASPHALT CEMENT BINDER

VDOT RBS Section 210.

2.3 Asphalt Concrete

VDOT RBS Section 211.

PART 3 EXECUTION

3.1 PREPARATION OF THE UNDERLYING SURFACE

Immediately before placing the hot mix asphalt, the underlying course shall be cleaned of dust and debris. A tack coat shall be applied in accordance with the contract specifications.

3.2 TRANSPORTING, PLACING, AND COMPACTING

VDOT RBS Section 315.

3.3 JOINTS

The formation of joints shall be made ensuring a continuous bond between the courses and to obtain the required density. All joints shall have the same texture as other sections of the course and meet the requirements for smoothness and grade.

3.3.1 Transverse Joints

The roller shall not pass over the unprotected end of the freshly laid mixture, except when necessary to form a transverse joint. When necessary to form a transverse joint, it shall be made by means of placing a bulkhead or by tapering the course. The tapered edge shall be cut back to its full depth and width on a straight line to expose a vertical face prior to placing material at the joint . The cutback material shall be removed from the project. In both methods, all contact surfaces shall be given a light tack coat of asphalt material before placing any fresh mixture against the joint.

3.3.2 Longitudinal Joints

Longitudinal joints which are irregular, damaged, uncompacted, cold (less than 175 degrees F at the time of placing adjacent lanes), or otherwise defective, shall be cut back a minimum of 2 inches from the edge with a cutting wheel to expose a clean, sound vertical surface for the full depth of the course. All cutback material shall be removed from the project. All contact surfaces shall be given a light tack coat of asphalt material prior to placing any fresh mixture against the joint. The Contractor will be allowed to use an alternate method if it can be demonstrated that density, smoothness, and texture can be met.

3.4 CONTRACTOR QUALITY CONTROL

3.4.1 Quality Control Testing

3.4.1.1 In-Place Density

The Contractor shall conduct any necessary testing to ensure the specified density is achieved. A nuclear gauge may be used to monitor pavement density in accordance with ASTM D 2950.

3.4.1.2 Additional Testing

Any additional testing, which the Contractor deems necessary to control the process, may be performed at the Contractor's option.

3.4.1.3 QC Monitoring

The Contractor shall submit all QC test results to the Contracting Officer on a daily basis as the tests are performed. The Contracting Officer reserves the right to monitor any of the Contractor's quality control testing and to perform duplicate testing as a check to the Contractor's quality control testing.

3.4.2 Sampling

When directed by the Contracting Officer, the Contractor shall sample and test any material which appears inconsistent with similar material being produced, unless such material is voluntarily removed and replaced or deficiencies corrected by the Contractor. All sampling shall be in accordance with standard procedures specified.

Table 6. Action and Suspension Limits for the Parameters to be Plotted on Individual and Running Average Control Charts

	Running Average of Individual Samples		Last Four Samples	
Parameter to be Plotted	Action Limit	Suspension Limit	Action Limit	Suspension Limit
No. 4 sieve, Cumulative % Passing, deviation from JMF target; plus or minus values	6	8	4	5
No. 30 sieve, Cumulative % Passing, deviation from JMF	4	6	3	4

Table 6. Action and Suspension Limits for the Parameters to be Plotted on Individual and Running Average Control Charts

Parameter to be Plotted	Running Average of Individual Samples		Last Four Samples	
	Action Limit	Suspension Limit	Action Limit	Suspension Limit
target; plus or minus values				
No. 200 sieve, Cumulative % Passing, deviation from JMF target; plus or minus values	1.4	2.0	1.1	1.5
Stability, pounds (minimum)				
75 Blow JMF	1800	1700	1900	1800
50 Blow JMF	1000	900	1100	1000
Flow, 0.01 inches				
75 Blow	8 min. 16 max.	7 min. 17 max.	9 min. 15 max.	8 min. 16 max.
50 Blow	8 min. 18 max.	7 min. 19 max.	9 min. 17 max.	8 min. 18 max.
Asphalt content, % deviation from JMF target; plus or minus value	0.4	0.5	0.2	0.3
Laboratory Air Voids, % deviation from JMF target value	No specific action and suspension limits set since this parameter is used to determine percent payment			
In-place Mat Density, % of Marshall density	No specific action and suspension limits set since this parameter is used to determine percent payment			
In-place Joint Density, % of Marshall density	No specific action and suspension limits set since this parameter is used to determine percent payment			

-- End of Section --

SECTION 02748A

BITUMINOUS TACK AND PRIME COATS
01/98

PART 1 GENERAL

1.1 SUBMITTALS

Government approval is required for submittals with a "G" designation; submittals not having a "G" designation are for information only. When used, a designation following the "G" designation identifies the office that will review the submittal for the Government. The following shall be submitted in accordance with Section 01330 SUBMITTAL PROCEDURES:

SD-07 Certificates

Certificates of Compliance

1.2 PLANT, EQUIPMENT, MACHINES AND TOOLS

1.2.1 General Requirements

Plant, equipment, machines and tools used in the work shall be subject to approval and shall be maintained in a satisfactory working condition at all times.

1.2.2 Bituminous Distributor

The distributor shall have pneumatic tires of such size and number to prevent rutting, shoving or otherwise damaging the base surface or other layers in the pavement structure. The distributor shall be designed and equipped to spray the bituminous material in a uniform coverage at the specified temperature, at readily determined and controlled rates with an allowable variation from the specified rate of not more than plus or minus 5 percent, and at variable widths. Distributor equipment shall include a separate power unit for the bitumen pump, full-circulation spray bars, tachometer, pressure gauges, volume-measuring devices, adequate heaters for heating of materials to the proper application temperature, a thermometer for reading the temperature of tank contents, and a hand hose attachment suitable for applying bituminous material manually to areas inaccessible to the distributor. The distributor shall be equipped to circulate and agitate the bituminous material during the heating process.

1.2.3 Power Brooms and Power Blowers

Power brooms and power blowers shall be suitable for cleaning the surfaces to which the bituminous coat is to be applied.

1.3 WEATHER LIMITATIONS

Bituminous coat shall be applied only when the surface to receive the bituminous coat is dry. Bituminous coat shall be applied only when the atmospheric temperature in the shade is 50 degrees F or above and when the temperature has not been below 35 degrees F for the 12 hours prior to application.

PART 2 PRODUCTS

2.1 TACK COAT

Emulsified asphalt, grade CRS-1 or CSS1h conforming to VDOT RBS Section 210.

PART 3 EXECUTION

3.1 PREPARATION OF SURFACE

Immediately before applying the bituminous coat, all loose material, dirt, clay, or other objectionable material shall be removed from the surface to be treated. The surface shall be dry and clean at the time of treatment.

3.2 APPLICATION RATE

The exact quantities within the range specified, which may be varied to suit field conditions, will be determined by the Contracting Officer.

3.2.1 Tack Coat

Bituminous material for the tack coat shall be applied in quantities of not less than 0.05 gallon nor more than 0.15 gallon per square yard of pavement surface.

3.3 APPLICATION

VDOT RBS SEction 310.

<&

SECTION 02763A

PAVEMENT MARKINGS
04/01

PART 1 GENERAL

1.1 REFERENCES

The publications listed below form a part of this specification to the extent referenced. The publications are referred to in the text by basic designation only.

AMERICAN ASSOCIATION OF STATE HIGHWAY AND TRANSPORTATION OFFICIALS (AASHTO)

AASHTO M 247	(1981; R 1996) Glass Beads Used in Traffic Paint

U.S. GENERAL SERVICES ADMINISTRATION (GSA)

FS TT-B-1325	(Rev C; Notice 1; Canc. Notice 2) Beads (Glass Spheres) Retro-Reflective (Metric)
FS TT-P-1952	(Rev D; Canc. Notice 1) Paint, Traffic and Airfield Marking, Waterborne (Metric)

1.2 SUBMITTALS

Government approval is required for submittals with a "G" designation; submittals not having a "G" designation are for information only. When used, a designation following the "G" designation identifies the office that will review the submittal for the Government. The following shall be submitted in accordance with Section 01330 SUBMITTAL PROCEDURES:

SD-07 Certificates

Volatile Organic Compound (VOC)

Certificate stating that the proposed pavement marking paint meets the VOC regulations of the local Air Pollution Control District having jurisdiction over the geographical area in which the project is located.

1.3 DELIVERY AND STORAGE

All materials shall be delivered and stored in sealed containers that plainly show the designated name, formula or specification number, batch number, color, date of manufacture, manufacturer's name, and directions, all of which shall be plainly legible at time of use.

1.4 EQUIPMENT

All machines, tools and equipment used in the performance of the work shall be approved and maintained in satisfactory operating condition. Equipment operating on roads and runways shall display low speed traffic markings and

traffic warning lights.

1.4.1 Paint Application Equipment

The equipment to apply paint to pavements shall be a self-propelled or mobile-drawn pneumatic spraying machine with suitable arrangements of atomizing nozzles and controls to obtain the specified results. The machine shall have a speed during application not less than 5 mph, and shall be capable of applying the stripe widths indicated, at the paint coverage rate specified in paragraph APPLICATION, and of even uniform thickness with clear-cut edges. Equipment used for marking streets and highways shall be capable of placing the prescribed number of lines at a single pass as solid lines, intermittent lines or a combination of solid and intermittent lines using a maximum of two different colors of paint as specified. The paint applicator shall have paint reservoirs or tanks of sufficient capacity and suitable gauges to apply paint in accordance with requirements specified. Tanks shall be equipped with suitable air-driven mechanical agitators. The spray mechanism shall be equipped with quick-action valves conveniently located, and shall include necessary pressure regulators and gauges in full view and reach of the operator. Paint strainers shall be installed in paint supply lines to ensure freedom from residue and foreign matter that may cause malfunction of the spray guns. The paint applicator shall be readily adaptable for attachment of an air-actuated dispenser for the reflective media approved for use. Pneumatic spray guns shall be provided for hand application of paint in areas where the mobile paint applicator cannot be used.

1.4.2 Reflective Media Dispenser

The dispenser for applying the reflective media shall be attached to the paint dispenser and shall operate automatically and simultaneously with the applicator through the same control mechanism. The dispenser shall be capable of adjustment and designed to provide uniform flow of reflective media over the full length and width of the stripe at the rate of coverage specified in paragraph APPLICATION, at all operating speeds of the applicator to which it is attached.

1.4.3 Traffic Controls

Suitable warning signs shall be placed near the beginning of the worksite and well ahead of the worksite for alerting approaching traffic from both directions. Small markers shall be placed along newly painted lines or freshly placed raised markers to control traffic and prevent damage to newly painted surfaces or displacement of raised pavement markers. Painting equipment shall be marked with large warning signs indicating slow-moving painting equipment in operation.

1.5 HAND-OPERATED, PUSH-TYPE MACHINES

All machines, tools, and equipment used in performance of the work shall be approved and maintained in satisfactory operating condition. Hand-operated push-type machines of a type commonly used for application of paint to pavement surfaces will be acceptable for marking small streets and parking areas. Applicator machine shall be equipped with the necessary paint tanks and spraying nozzles, and shall be capable of applying paint uniformly at coverage specified. Sandblasting equipment shall be provided as required for cleaning surfaces to be painted. Hand-operated spray guns shall be provided for use in areas where push-type machines cannot be used.

1.6 MAINTENANCE OF TRAFFIC

1.6.1 Roads, Streets, and Parking Areas

When traffic must be rerouted or controlled to accomplish the work, the necessary warning signs, flagpersons, and related equipment for the safe passage of vehicles shall be provided.

PART 2 PRODUCTS

2.1 PAINT

The paint shall be homogeneous, easily stirred to smooth consistency, and shall show no hard settlement or other objectionable characteristics during a storage period of 6 months. Paints for airfields, roads, and streets shall conform to FS TT-P-1952, color as indicated. Pavement marking paints shall comply with applicable state and local laws enacted to ensure compliance with Federal Clean Air Standards. Paint materials shall conform to the restrictions of the local Air Pollution Control District.

2.2 REFLECTIVE MEDIA

Reflective media for roads and streets shall conform to FS TT-B-1325, Type I, Gradation A or AASHTO M 247, Type I.

PART 3 EXECUTION

3.1 SURFACE PREPARATION

Surfaces to be marked shall be thoroughly cleaned before application of the pavement marking material. Dust, dirt, and other granular surface deposits shall be removed by sweeping, blowing with compressed air, rinsing with water or a combination of these methods as required. Rubber deposits, surface laitance, existing paint markings, and other coatings adhering to the pavement shall be completely removed with scrapers, wire brushes, sandblasting, approved chemicals, or mechanical abrasion as directed. Areas of old pavement affected with oil or grease shall be scrubbed with several applications of trisodium phosphate solution or other approved detergent or degreaser, and rinsed thoroughly after each application. After cleaning, oil-soaked areas shall be sealed with cut shellac to prevent bleeding through the new paint. Pavement surfaces shall be allowed to dry, when water is used for cleaning, prior to striping or marking. Surfaces shall be recleaned, when work has been stopped due to rain.

3.1.1 Cleaning Existing Pavement Markings

In general, markings shall not be placed over existing pavement marking patterns. Existing pavement markings, which are in good condition but interfere or conflict with the newly applied marking patterns, shall be removed. Deteriorated or obscured markings that are not misleading or confusing or interfere with the adhesion of the new marking material do not require removal. Whenever grinding, scraping, sandblasting or other operations are performed the work must be conducted in such a manner that the finished pavement surface is not damaged or left in a pattern that is misleading or confusing. When these operations are completed the pavement surface shall be blown off with compressed air to remove residue and debris resulting from the cleaning work.

3.2 APPLICATION

All pavement markings and patterns shall be placed as shown on the plans.

3.2.1 Paint

Paint shall be applied to clean, dry surfaces, and only when air and pavement temperatures are above 40 degrees F and less than 95 degrees F. Paint temperature shall be maintained within these same limits. New asphalt pavement surfaces and new Portland concrete cement shall be allowed to cure for a period of not less than 30 days before applications of paint. Paint shall be applied pneumatically with approved equipment at rate of coverage specified . The Contractor shall provide guide lines and templates as necessary to control paint application. Special precautions shall be taken in marking numbers, letters, and symbols. Edges of markings shall be sharply outlined.

3.2.1.1 Rate of Application

a. Reflective Markings: Pigmented binder shall be applied evenly to the pavement area to be coated at a rate of 105 plus or minus 5 square feet per gallon. Glass spheres shall be applied uniformly to the wet paint on road and street pavement at a rate of 6 plus or minus 0.5 pounds of glass spheres per gallon of paint.

b. Nonreflective Markings: Paint shall be applied evenly to the pavement surface to be coated at a rate of 105 plus or minus 5 square feet per gallon.

3.2.1.2 Drying

The maximum drying time requirements of the paint specifications will be strictly enforced to prevent undue softening of bitumen, and pickup, displacement, or discoloration by tires of traffic. If there is a delay in drying of the markings, painting operations shall be discontinued until cause of the slow drying is determined and corrected.

3.2.2 Reflective Media

Application of reflective media shall immediately follow application of pigmented binder. Drop-on application of glass spheres shall be accomplished to insure that reflective media is evenly distributed at the specified rate of coverage. Should there be malfunction of either paint applicator or reflective media dispenser, operations shall be discontinued immediately until deficiency is corrected.

-- End of Section --

SECTION 02770A

CONCRETE SIDEWALKS AND CURBS AND GUTTERS
03/98

PART 1 GENERAL

1.1 REFERENCES

The publications listed below form a part of this specification to the extent referenced. The publications are referred to in the text by basic designation only.

AMERICAN ASSOCIATION OF STATE HIGHWAY AND TRANSPORTATION OFFICIALS (AASHTO)

AASHTO M 182	(1991) Burlap Cloth Made from Jute or Kenaf

AMERICAN SOCIETY FOR TESTING AND MATERIALS (ASTM)

ASTM A 185	(1997) Steel Welded Wire Fabric, Plain, for Concrete Reinforcement
ASTM C 143	(1990a) Slump of Hydraulic Cement Concrete
ASTM C 171	(1997) Sheet Materials for Curing Concrete
ASTM C 309	(1997) Liquid Membrane-Forming Compounds for Curing Concrete
ASTM D 1751	(1983; R 1991) Preformed Expansion Joint Filler for Concrete Paving and Structural Construction (Nonextruding and Resilient Bituminous Types)
ASTM D 1752	(1984; R 1996) Preformed Sponge Rubber and Cork Expansion Joint Fillers for Concrete Paving and Structural Construction

1.2 WEATHER LIMITATIONS

1.2.1 Placing During Cold Weather

Concrete placement shall not take place when the air temperature reaches 40 degrees F and is falling, or is already below that point. Placement may begin when the air temperature reaches 35 degrees F and is rising, or is already above 40 degrees F. Provisions shall be made to protect the concrete from freezing during the specified curing period. If necessary to place concrete when the temperature of the air, aggregates, or water is below 35 degrees F, placement and protection shall be approved in writing. Approval will be contingent upon full conformance with the following provisions. The underlying material shall be prepared and protected so that it is entirely free of frost when the concrete is deposited. Mixing water shall be heated as necessary to result in the temperature of the in-place concrete being between 50 and 85 degrees F. Methods and equipment for heating shall be approved. The aggregates shall be free of

ice, snow, and frozen lumps before entering the mixer. Covering and other means shall be provided for maintaining the concrete at a temperature of at least 50 degrees F for not less than 72 hours after placing, and at a temperature above freezing for the remainder of the curing period.

1.2.2 Placing During Warm Weather

The temperature of the concrete as placed shall not exceed 85 degrees F except where an approved retarder is used. The mixing water and/or aggregates shall be cooled, if necessary, to maintain a satisfactory placing temperature. The placing temperature shall not exceed 95 degrees F at any time.

1.3 PLANT, EQUIPMENT, MACHINES, AND TOOLS

1.3.1 General Requirements

Plant, equipment, machines, and tools used in the work shall be subject to approval and shall be maintained in a satisfactory working condition at all times. The equipment shall have the capability of producing the required product, meeting grade controls, thickness control and smoothness requirements as specified. Use of the equipment shall be discontinued if it produces unsatisfactory results. The Contracting Officer shall have access at all times to the plant and equipment to ensure proper operation and compliance with specifications.

1.3.2 Slip Form Equipment

Slip form paver or curb forming machine, will be approved based on trial use on the job and shall be self-propelled, automatically controlled, crawler mounted, and capable of spreading, consolidating, and shaping the plastic concrete to the desired cross section in 1 pass.

PART 2 PRODUCTS

2.1 CONCRETE

Concrete shall have a minimum compressive strength of 3500 psi at 28 days. Maximum size of aggregate shall be 1-1/2 inches.

2.1.1 Air Content

Mixtures shall have air content by volume of concrete of 5 to 7 percent, based on measurements made immediately after discharge from the mixer.

2.1.2 Slump

The concrete slump shall be 2 inches plus or minus 1 inch where determined in accordance with ASTM C 143.

2.1.3 Reinforcement Steel

Wire mesh reinforcement shall conform to ASTM A 185.

2.2 CONCRETE CURING MATERIALS

2.2.1 Impervious Sheet Materials

Impervious sheet materials shall conform to ASTM C 171, type optional,

except that polyethylene film, if used, shall be white opaque.

2.2.2 Burlap

Burlap shall conform to AASHTO M 182.

2.2.3 White Pigmented Membrane-Forming Curing Compound

White pigmented membrane-forming curing compound shall conform to ASTM C 309, Type 2.

2.3 CONCRETE PROTECTION MATERIALS

Concrete protection materials shall be a linseed oil mixture of equal parts, by volume, of linseed oil and either mineral spirits, naphtha, or turpentine. At the option of the contractor, commercially prepared linseed oil mixtures, formulated specifically for application to concrete to provide protection against the action of deicing chemicals may be used, except that emulsified mixtures are not acceptable.

2.4 JOINT FILLER STRIPS

2.4.1 Contraction Joint Filler for Curb and Gutter

Contraction joint filler for curb and gutter shall consist of hard-pressed fiberboard.

2.4.2 Expansion Joint Filler, Premolded

Expansion joint filler, premolded, shall conform to ASTM D 1751 or ASTM D 1752, 3/8 inch thick, unless otherwise indicated.

2.5 FORM WORK

Form work shall be designed and constructed to ensure that the finished concrete will conform accurately to the indicated dimensions, lines, and elevations, and within the tolerances specified. Forms shall be of wood or steel, straight, of sufficient strength to resist springing during depositing and consolidating concrete. Wood forms shall be surfaced plank, 2 inches nominal thickness, straight and free from warp, twist, loose knots, splits or other defects. Wood forms shall have a nominal length of 10 feet. Radius bends may be formed with 3/4 inch boards, laminated to the required thickness. Steel forms shall be channel-formed sections with a flat top surface and with welded braces at each end and at not less than two intermediate points. Ends of steel forms shall be interlocking and self-aligning. Steel forms shall include flexible forms for radius forming, corner forms, form spreaders, and fillers. Steel forms shall have a nominal length of 10 feet with a minimum of 3 welded stake pockets per form. Stake pins shall be solid steel rods with chamfered heads and pointed tips designed for use with steel forms.

2.5.1 Sidewalk Forms

Sidewalk forms shall be of a height equal to the full depth of the finished sidewalk.

2.5.2 Curb and Gutter Forms

Curb and gutter outside forms shall have a height equal to the full depth

of the curb or gutter. The inside form of curb shall have batter as indicated and shall be securely fastened to and supported by the outside form. Rigid forms shall be provided for curb returns, except that benders or thin plank forms may be used for curb or curb returns with a radius of 10 feet or more, where grade changes occur in the return, or where the central angle is such that a rigid form with a central angle of 90 degrees cannot be used. Back forms for curb returns may be made of 1-1/2 inch benders, for the full height of the curb, cleated together. In lieu of inside forms for curbs, a curb "mule" may be used for forming and finishing this surface, provided the results are approved.

PART 3 EXECUTION

3.1 SUBGRADE PREPARATION

3.1.1 Maintenance of Subgrade

The subgrade shall be maintained in a smooth, compacted condition in conformity with the required section and established grade until the concrete is placed. The subgrade shall be in a moist condition when concrete is placed. The subgrade shall be prepared and protected to produce a subgrade free from frost when the concrete is deposited.

3.2 FORM SETTING

Forms shall be set to the indicated alignment, grade and dimensions. Forms shall be held rigidly in place by a minimum of 3 stakes per form placed at intervals not to exceed 4 feet. Corners, deep sections, and radius bends shall have additional stakes and braces, as required. Clamps, spreaders, and braces shall be used where required to ensure rigidity in the forms. Forms shall be removed without injuring the concrete. Bars or heavy tools shall not be used against the concrete in removing the forms. Any concrete found defective after form removal shall be promptly and satisfactorily repaired. Forms shall be cleaned and coated with form oil each time before concrete is placed. Wood forms may, instead, be thoroughly wetted with water before concrete is placed, except that with probable freezing temperatures, oiling is mandatory.

3.2.1 Sidewalks

Forms for sidewalks shall be set with the upper edge true to line and grade with an allowable tolerance of 1/8 inch in any 10 foot long section. After forms are set, grade and alignment shall be checked with a 10 foot straightedge. Forms shall have a transverse slope of 1/4 inch per foot with the low side adjacent to the roadway. Side forms shall not be removed for 12 hours after finishing has been completed.

3.2.2 Curbs and Gutters

The forms of the front of the curb shall be removed not less than 2 hours nor more than 6 hours after the concrete has been placed. Forms back of curb shall remain in place until the face and top of the curb have been finished, as specified for concrete finishing. Gutter forms shall not be removed while the concrete is sufficiently plastic to slump in any direction.

3.3 SIDEWALK CONCRETE PLACEMENT AND FINISHING

3.3.1 Formed Sidewalks

Concrete shall be placed in the forms in one layer. When consolidated and finished, the sidewalks shall be of the thickness indicated. After concrete has been placed in the forms, a strike-off guided by side forms shall be used to bring the surface to proper section to be compacted. The concrete shall be consolidated with an approved vibrator, and the surface shall be finished to grade with a strike off.

3.3.2 Concrete Finishing

After straightedging, when most of the water sheen has disappeared, and just before the concrete hardens, the surface shall be finished with a wood float or darby to a smooth and uniformly fine granular or sandy texture free of waves, irregularities, or tool marks. A scored surface shall be produced by brooming with a fiber-bristle brush in a direction transverse to that of the traffic, followed by edging.

3.3.3 Edge and Joint Finishing

All slab edges, including those at formed joints, shall be finished with an edger having a radius of 1/8 inch. Transverse joint shall be edged before brooming, and the brooming shall eliminate the flat surface left by the surface face of the edger. Corners and edges which have crumbled and areas which lack sufficient mortar for proper finishing shall be cleaned and filled solidly with a properly proportioned mortar mixture and then finished.

3.3.4 Surface and Thickness Tolerances

Finished surfaces shall not vary more than 5/16 inch from the testing edge of a 10-foot straightedge. Permissible deficiency in section thickness will be up to 1/4 inch.

3.4 CURB AND GUTTER CONCRETE PLACEMENT AND FINISHING

3.4.1 Formed Curb and Gutter

Concrete shall be placed to the section required in a single lift. Consolidation shall be achieved by using approved mechanical vibrators. Curve shaped gutters shall be finished with a standard curb "mule".

3.4.2 Curb and Gutter Finishing

Approved slipformed curb and gutter machines may be used in lieu of hand placement.

3.4.3 Concrete Finishing

Exposed surfaces shall be floated and finished with a smooth wood float until true to grade and section and uniform in texture. Floated surfaces shall then be brushed with a fine-hair brush with longitudinal strokes. The edges of the gutter and top of the curb shall be rounded with an edging tool to a radius of 1/2 inch. Immediately after removing the front curb form, the face of the curb shall be rubbed with a wood or concrete rubbing block and water until blemishes, form marks, and tool marks have been removed. The front curb surface, while still wet, shall be brushed in the same manner as the gutter and curb top. The top surface of gutter and entrance shall be finished to grade with a wood float.

3.4.4 Joint Finishing

Curb edges at formed joints shall be finished as indicated.

3.4.5 Surface and Thickness Tolerances

Finished surfaces shall not vary more than 1/4 inch from the testing edge of a 10-foot straightedge. Permissible deficiency in section thickness will be up to 1/4 inch.

3.5 SIDEWALK JOINTS

Sidewalk joints shall be constructed to divide the surface into rectangular areas. Transverse contraction joints shall be spaced at a distance equal to the sidewalk width or 5 feet on centers, whichever is less, and shall be continuous across the slab. Longitudinal contraction joints shall be constructed along the centerline of all sidewalks 10 feet or more in width. Transverse expansion joints shall be installed at sidewalk returns and opposite expansion joints in adjoining curbs. Where the sidewalk is not in contact with the curb, transverse expansion joints shall be installed as indicated. Expansion joints shall be formed about structures and features which project through or into the sidewalk pavement, using joint filler of the type, thickness, and width indicated.

3.5.1 Sidewalk Contraction Joints

The contraction joints shall be formed in the fresh concrete by cutting a groove in the top portion of the slab to a depth of at least one-fourth of the sidewalk slab thickness, using a jointer to cut the groove, or by sawing a groove in the hardened concrete with a power-driven saw, unless otherwise approved. Sawed joints shall be constructed by sawing a groove in the concrete with a 1/8 inch blade to the depth indicated. An ample supply of saw blades shall be available on the job before concrete placement is started, and at least one standby sawing unit in good working order shall be available at the jobsite at all times during the sawing operations.

3.5.2 Sidewalk Expansion Joints

Expansion joints shall be formed with 3/8 inch joint filler strips. Joint filler shall be placed with top edge 1/4 inch below the surface and shall be held in place with steel pins or other devices to prevent warping of the filler during floating and finishing. Immediately after finishing operations are completed, joint edges shall be rounded with an edging tool having a radius of 1/8 inch, and concrete over the joint filler shall be removed. At the end of the curing period, expansion joints shall be cleaned and filled with joint sealant.

3.6 CURB AND GUTTER JOINTS

Curb and gutter joints shall be constructed at right angles to the line of curb and gutter.

3.6.1 Contraction Joints

Contraction joints shall be constructed directly opposite contraction joints in abutting portland cement concrete pavements and spaced so that monolithic sections between curb returns will not be less than 5 feet nor greater than 15 feet in length. Contraction joints shall be constructed

by means of 1/8 inch thick separators and of a section conforming to the cross section of the curb and gutter. Separators shall be removed as soon as practicable after concrete has set sufficiently to preserve the width and shape of the joint and prior to finishing.

3.6.2 Expansion Joints

Expansion joints shall be formed by means of preformed expansion joint filler material cut and shaped to the cross section of curb and gutter. Expansion joints shall be provided in curb and gutter directly opposite expansion joints of abutting portland cement concrete pavement, and shall be of the same type and thickness as joints in the pavement. Where curb and gutter do not abut portland cement concrete pavement, expansion joints at least 3/8 inch in width shall be provided at intervals not exceeding 40 feet. Expansion joints shall be sealed immediately following curing of the concrete or as soon thereafter as weather conditions permit.

3.7 CURING AND PROTECTION

3.7.1 General Requirements

Concrete shall be protected against loss of moisture and rapid temperature changes for at least 7 days from the beginning of the curing operation. Unhardened concrete shall be protected from rain and flowing water. All equipment needed for adequate curing and protection of the concrete shall be on hand and ready for use before actual concrete placement begins. Protection shall be provided as necessary to prevent cracking of the pavement due to temperature changes during the curing period.

3.7.1.1 Mat Method

The entire exposed surface shall be covered with 2 or more layers of burlap. Mats shall overlap each other at least 6 inches.The mat shall be thoroughly wetted with water prior to placing on concrete surface and shall be kept continuously in a saturated condition and in intimate contact with concrete for not less than 7 days.

3.7.1.2 Impervious Sheeting Method

The entire exposed surface shall be wetted with a fine spray of water and then covered with impervious sheeting material. Sheets shall be laid directly on the concrete surface with the light-colored side up and overlapped 12 inches when a continuous sheet is not used. The curing medium shall not be less than 18-inches wider than the concrete surface to be cured, and shall be securely weighted down by heavy wood planks, or a bank of moist earth placed along edges and laps in the sheets. Sheets shall be satisfactorily repaired or replaced if torn or otherwise damaged during curing. The curing medium shall remain on the concrete surface to be cured for not less than 7 days.

3.7.1.3 Membrane Curing Method

A uniform coating of white-pigmented membrane-curing compound shall be applied to the entire exposed surface of the concrete as soon after finishing as the free water has disappeared from the finished surface. Formed surfaces shall be coated immediately after the forms are removed and in no case longer than 1 hour after the removal of forms. Concrete shall not be allowed to dry before the application of the membrane. If any drying has occurred, the surface of the concrete shall be moistened with a

fine spray of water and the curing compound applied as soon as the free water disappears. Curing compound shall be applied in two coats by hand-operated pressure sprayers at a coverage of approximately 200 square feet per gallon for the total of both coats. The second coat shall be applied in a direction approximately at right angles to the direction of application of the first coat. The compound shall form a uniform, continuous, coherent film that will not check, crack, or peel and shall be free from pinholes or other imperfections. If pinholes, abrasion, or other discontinuities exist, an additional coat shall be applied to the affected areas within 30 minutes. Concrete surfaces that are subjected to heavy rainfall within 3 hours after the curing compound has been applied shall be resprayed by the method and at the coverage specified above. Areas where the curing compound is damaged by subsequent construction operations within the curing period shall be resprayed. Necessary precautions shall be taken to insure that the concrete is properly cured at sawed joints, and that no curing compound enters the joints. The top of the joint opening and the joint groove at exposed edges shall be tightly sealed before the concrete in the region of the joint is resprayed with curing compound. The method used for sealing the joint groove shall prevent loss of moisture from the joint during the entire specified curing period. Approved standby facilities for curing concrete pavement shall be provided at a location accessible to the jobsite for use in the event of mechanical failure of the spraying equipment or other conditions that might prevent correct application of the membrane-curing compound at the proper time. Concrete surfaces to which membrane-curing compounds have been applied shall be adequately protected during the entire curing period from pedestrian and vehicular traffic, except as required for joint-sawing operations and surface tests, and from any other possible damage to the continuity of the membrane.

3.7.2 Backfilling

After curing, debris shall be removed and the area adjoining the concrete shall be backfilled, graded, and compacted to conform to the surrounding area in accordance with lines and grades indicated.

3.7.3 Protection

Completed concrete shall be protected from damage until accepted. The Contractor shall repair damaged concrete and clean concrete discolored during construction. Concrete that is damaged shall be removed and reconstructed for the entire length between regularly scheduled joints. Refinishing the damaged portion will not be acceptable. Removed damaged portions shall be disposed of as directed.

3.8 SURFACE DEFICIENCIES AND CORRECTIONS

3.8.1 High Areas

In areas not meeting surface smoothness and plan grade requirements, high areas shall be reduced either by rubbing the freshly finished concrete with carborundum brick and water when the concrete is less than 36 hours old or by grinding the hardened concrete with an approved surface grinding machine after the concrete is 36 hours old or more. The area corrected by grinding the surface of the hardened concrete shall not exceed 5 percent of the area of any integral slab, and the depth of grinding shall not exceed 1/4 inch.

Pavement areas requiring grade or surface smoothness corrections in excess of the limits specified above shall be removed and replaced.

3.8.2 Appearance

Exposed surfaces of the finished work will be inspected by the Government and any deficiencies in appearance will be identified. Areas which exhibit excessive cracking, discoloration, form marks, or tool marks or which are otherwise inconsistent with the overall appearances of the work shall be removed and replaced.

-- End of Section --

SECTION 02921A

SEEDING
05/01

PART 1 GENERAL

1.1 REFERENCES

The publications listed below form a part of this specification to the extent referenced. The publications are referred to in the text by basic designation only.

U.S. DEPARTMENT OF AGRICULTURE (USDA)

AMS Seed Act	(1995) Federal Seed Act Regulations Part 201

AMERICAN SOCIETY FOR TESTING AND MATERIALS (ASTM)

ASTM C 602	(1995a) Agricultural Liming Materials
ASTM D 977	(1998) Emulsified Asphalt
ASTM D 2028	(1976; R 1997) Cutback Asphalt (Rapid-Curing Type)
ASTM D 4972	(1995a) pH of Soils
ASTM D 5268	(1992; R 1996) Topsoil Used for Landscaping Purposes
ASTM D 5883	(1996el) Use of Rotary Kiln Produced Expanded Shale, Clay or Slate (ESCS) as a Mineral Amendment in Topsoil Used for Landscaping and Related Purposes

1.2 SUBMITTALS

Government approval is required for submittals with a "G" designation; submittals not having a "G" designation are for information only. When used, a designation following the "G" designation identifies the office that will review the submittal for the Government. The following shall be submitted in accordance with Section 01330 SUBMITTAL PROCEDURES:

SD-07 Certificates

Seed
pH Adjuster
Fertilizer

Prior to the delivery of materials, certificates of compliance attesting that materials meet the specified requirements. Certified copies of the material certificates shall include the following:

a. Seed. Classification, botanical name, common name,

percent pure live seed, minimum percent germination and hard seed, maximum percent weed seed content, and date tested.

1.3 DELIVERY, INSPECTION, STORAGE, AND HANDLING

1.3.1 Inspection

Seed shall be inspected upon arrival at the job site for conformity to species and quality. Seed that is wet, moldy, or bears a test date five months or older, shall be rejected. Other materials shall be inspected for compliance with specified requirements. The following shall be rejected: open soil amendment containers or wet soil amendments; topsoil that contains slag, cinders, stones, lumps of soil, sticks, roots, trash or other material over a minimum 1-1/2 inch diameter; and topsoil that contains viable plants and plant parts. Unacceptable materials shall be removed from the job site.

1.3.2 Storage

Materials shall be stored in designated areas. Seed, lime, and fertilizer shall be stored in cool, dry locations away from contaminants. Chemical treatment material shall be stored according to manufacturer's instructions and not with seeding operation materials.

1.3.3 Handling

Except for bulk deliveries, materials shall not be dropped or dumped from vehicles.

PART 2 PRODUCTS

2.1 SEED

2.1.1 Seed Classification

State-certified State-approved seed of the latest season's crop shall be provided in original sealed packages bearing the producer's guaranteed analysis for percentages of mixture, purity, germination, hard seed, weed seed content, and inert material. Labels shall be in conformance with AMS Seed Act and applicable state seed laws.

2.1.2 Permanent Seed Species and Mixtures

Permanent seed species shall be as follows:

Kentucky 31 of Turf-Type Tail Fescue 175-200 lbs per acre.

2.1.3 Temporary Seed Species

Temporary seed species for surface erosion control or overseeding shall be as follows:

Acceptable Temporary Seeding Plant Materials

Planting Dates	Species	Rate
Sept. 1 - Feb. 15	50/50 Mix of Annual Ryegrass	

Acceptable Temporary Seeding Plant Materials	(Lolium Multi-Florum) & Cereal (Winter) Rye (Secale Cereale)	50 - 100
Feb. 16 - Apr. 30	Annual Ryegrass (Lolium Multi-Florum	60 - 100
May 1 - Aug. 31	German Millet (Setaria Italica	50

2.1.4 Quality

Weed seed shall be a maximum 1 percent by weight of the total mixture.

2.1.5 Seed Mixing

The mixing of seed may be done by the seed supplier prior to delivery, or on site as directed.

2.1.6 Substitutions

Substitutions will not be allowed without written request and approval from the Contracting Officer.

2.2 TOPSOIL

The topsoil shall be the existing surface soil stripped and stockpiled onsite in accordance with Section 02300 EARTHWORK. When additional topsoil is required beyond the available topsoil from the stripping operation, topsoil shall be delivered and amended as recommended by the soil test for the seed specified. Topsoil shall be free from slag, cinders, stones, lumps of soil, sticks, roots, trash or other material over a minimum 1-1/2 inch diameter. Topsoil shall be free from viable plants and plant parts.

2.3 SOIL AMENDMENTS

Soil amendments shall consist of pH adjuster, fertilizer, organic material and soil conditioners meeting the following requirements. Vermiculite shall not be used.

2.3.1 pH Adjuster

The pH adjuster shall be an agricultural liming material in accordance with ASTM C 602. These materials may be burnt lime, hydrated lime, ground limestone, sulfur, or shells. The pH adjuster shall be used to create a favorable soil pH for the plant material specified.

2.3.1.1 Limestone

Limestone material shall contain a minimum calcium carbonate equivalent of 80 percent. Gradation: A minimum 95 percent shall pass through a No. 8 sieve and a minimum 55 percent shall pass through a No. 60 sieve. To raise soil pH, ground limestone shall be used.

2.3.1.2 Hydrated Lime

Hydrated lime shall contain a minimum calcium carbonate equivalent of 110

percent. Gradation: A minimum 100 percent shall pass through a No. 8 sieve and a minimum 97 percent shall pass through a No. 60 sieve.

2.3.1.3 Burnt Lime

Burnt lime shall contain a minimum calcium carbonate equivalent of 140 percent. Gradation: A minimum 95 percent shall pass through a No. 8 sieve and a minimum 35 percent shall pass through a No. 60 sieve.

2.3.2 Fertilizer

It shall be as recommended by the soil test. Fertilizer shall be controlled release commercial grade, free flowing, uniform in composition, and consist of a nitrogen-phosphorus-potassium ratio. The fertilizer shall be derived from sulphur coated urea, urea formaldehyde, plastic or polymer coated pills, or isobutylenediurea (IBDU). Fertilizer shall be balanced with the inclusion of trace minerals and micro-nutrients.

2.3.3 Nitrogen Carrier Fertilizer

It shall be as recommended by the soil test. Nitrogen carrier fertilizer shall be commercial grade, free flowing, and uniform in composition. The fertilizer may be a liquid nitrogen solution.

2.3.4 Organic Material

Organic material shall consist of either bonemeal, rotted manure, decomposed wood derivatives, recycled compost, or worm castings.

2.3.4.1 Bonemeal

Bonemeal shall be finely ground, steamed bone product containing from 2 to 4 percent nitrogen and 16 to 40 percent phosphoric acid.

2.3.4.2 Rotted Manure

Rotted manure shall be unleached horse, chicken or cattle manure containing a maximum 25 percent by volume of straw, sawdust, or other bedding materials. It shall contain no chemicals or ingredients harmful to plants. The manure shall be heat treated to kill weed seeds and be free of stones, sticks, and soil.

2.3.4.3 Recycled Compost

Compost shall be a well decomposed, stable, weed free organic matter source. Compost shall be derived from food; agricultural or industrial residuals; biosolids (treated sewage sludge); yard trimmings; or source-separated or mixed solid waste. The compost shall possess no objectionable odors and shall not resemble the raw material from which it was derived. The material shall not contain substances toxic to plants. Gradation: The compost material shall pass through a 3/8 inch screen, possess a pH of 5.5 to 8.0, and have a moisture content between 35-55 percent by weight. The material shall not contain more than 1 percent by weight of man-made foreign matter. Compost shall be cleaned of plastic materials larger than 2 inches in length. Compost shall be Nutri-Green® or approved equal.

2.3.4.4 Worm Castings

Worm castings shall be screened from worms and food source, and shall be commercially packaged.

2.3.5 Soil Conditioner

Soil conditioner shall be sand, super absorbent polymers, calcined clay, or gypsum for use singly or in combination to meet the requirements of the soil test.

2.3.5.1 Sand

Sand shall be clean and free of toxic materials. Gradation: A minimum 95 percent by weight shall pass a No. 10 sieve and a minimum 10 percent by weight shall pass a No. 16 sieve. Greensand shall be balanced with the inclusion of trace minerals and nutrients.

2.3.5.2 Super Absorbent Polymers

To improve water retention in soils, super absorbent polymers shall be sized and applied according to the manufacturer's recommendations. Polymers shall be added as a soil amendment and be cross-linked polyacrylamide, with an absorption capacity of 250-400 times its weight. Polymers shall also be added to the seed and be a starch grafted polyacrylonitrite, with graphite added as a tacky sticker. It shall have an absorption capacity of 100 plus times its weight.

2.3.5.3 Calcined Clay

Calcined clay shall be granular particles produced from montmorillonite clay calcined to a minimum temperature of 1200 degrees F. Gradation: A minimum 90 percent shall pass a No. 8 sieve; a minimum 99 percent shall be retained on a No. 60 sieve; and a maximum 2 percent shall pass a No. 100 sieve. Bulk density: A maximum 40 pounds per cubic foot.

2.3.5.4 Gypsum

Gypsum shall be commercially packaged, free flowing, and a minimum 95 percent calcium sulfate by volume.

2.3.5.5 Expanded Shale, Clay, or Slate (ESCS)

Rotary kiln produced ESCS material shall be in conformance with ASTM D 5883.

2.4 MULCH

Mulch shall be free from weeds, mold, and other deleterious materials. Mulch materials shall be native to the region.

2.4.1 Straw

Straw shall be stalks from oats, wheat, rye, barley, or rice, furnished in air-dry condition and with a consistency for placing with commercial mulch-blowing equipment.

2.4.2 Hay

Hay shall be native hay, sudan-grass hay, broomsedge hay, or other herbaceous mowings, furnished in an air-dry condition suitable for placing with commercial mulch-blowing equipment.

2.4.3 Wood Cellulose Fiber

Wood cellulose fiber shall not contain any growth or germination-inhibiting factors and shall be dyed an appropriate color to facilitate placement during application. Composition on air-dry weight basis: 9 to 15 percent moisture, pH range from 4.5 to 6.0.

2.4.4 Paper Fiber

Paper fiber mulch shall be recycled news print that is shredded for the purpose of mulching seed.

2.5 ASPHALT ADHESIVE

Asphalt adhesive shall conform to the following: Emulsified asphalt, conforming to ASTM D 977, Grade SS-1; and cutback asphalt, conforming to ASTM D 2028, Designation RC-70.

2.6 WATER

Water shall be the responsibility of the Contractor, unless otherwise noted. Water shall not contain elements toxic to plant life.

PART 3 EXECUTION

3.1 INSTALLING SEED TIME AND CONDITIONS

3.1.1 Seeding Time

Seed shall be installed from Feb. 16 to April 30 for spring establishment; from May 1 to August 31 for summer establishment; and from Sept. 1 to Feb. 15 for fall establishment.

3.1.2 Seeding Conditions

Seeding operations shall be performed only during periods when beneficial results can be obtained. When drought, excessive moisture, or other unsatisfactory conditions prevail, the work shall be stopped when directed. When special conditions warrant a variance to the seeding operations, proposed alternate times shall be submitted for approval.

3.1.3 Soil Test

Delivered topsoil, existing soil in smooth graded areas, and stockpiled topsoil shall be tested in accordance with ASTM D 5268 and ASTM D 4972 for determining the particle size, pH, organic matter content, textural class, chemical analysis, soluble salts analysis, and mechanical analysis. Sample collection on site shall be random over the entire site. Sample collection for stockpiled topsoil shall be at different levels in the stockpile. The soil shall be free from debris, noxious weeds, toxic substances, or other materials harmful to plant growth. The test shall determine the quantities and type of soil amendments required to meet local growing conditions for the seed species specified.

3.2 SITE PREPARATION

3.2.1 Finished Grade and Topsoil

The Contractor shall verify that finished grades are as indicated on drawings, and the placing of topsoil, smooth grading, and compaction requirements have been completed in accordance with Section 02300 EARTHWORK, prior to the commencement of the seeding operation.

3.2.2 Application of Soil Amendments

3.2.2.1 Applying pH Adjuster

The pH adjuster shall be applied as recommended by the soil test. The pH adjuster shall be incorporated into the soil to a maximum 4 inch depth or may be incorporated as part of the tillage operation.

3.2.2.2 Applying Fertilizer

The fertilizer shall be applied as recommended by the soil test Fertilizer shall be incorporated into the soil to a maximum 4 inch depth or may be incorporated as part of the tillage or hydroseeding operation.

3.2.2.3 Applying Soil Conditioner

The soil conditioner shall be as recommended by the soil test. The soil conditioner shall be spread uniformly over the soil a minimum 1 inch depth and thoroughly incorporated by tillage into the soil to a maximum 4 inch depth.

3.2.2.4 Applying Super Absorbent Polymers

Polymers shall be spread uniformly over the soil as recommended by the manufacturer and thoroughly incorporated by tillage into the soil to a maximum 4 inch depth.

3.2.3 Tillage

Soil on slopes up to a maximum 3-horizontal-to-1-vertical shall be tilled to a minimum 4 inch depth. On slopes between 3-horizontal-to-1-vertical and 1-horizontal-to-1 vertical, the soil shall be tilled to a minimum 2 inch depth by scarifying with heavy rakes, or other method. Rototillers shall be used where soil conditions and length of slope permit. On slopes 1-horizontal-to-1 vertical and steeper, no tillage is required. Drainage patterns shall be maintained as indicated on drawings. Areas compacted by construction operations shall be completely pulverized by tillage. Soil used for repair of surface erosion or grade deficiencies shall conform to topsoil requirements. The pH adjuster, fertilizer, and soil conditioner may be applied during this procedure.

3.2.4 Prepared Surface

3.2.4.1 Preparation

The prepared surface shall be a maximum 1 inch below the adjoining grade of any surfaced area. New surfaces shall be blended to existing areas. The prepared surface shall be completed with a light raking to remove debris.

3.2.4.2 Lawn Area Debris

Debris and stones over a minimum 5/8 inch in any dimension shall be removed from the surface.

3.2.4.3 Protection

Areas with the prepared surface shall be protected from compaction or damage by vehicular or pedestrian traffic and surface erosion.

3.3 INSTALLATION

Prior to installing seed, any previously prepared surface compacted or damaged shall be reworked to meet the requirements of paragraph SITE PREPARATION. Seeding operations shall not take place when the wind velocity will prevent uniform seed distribution.

3.3.1 Installing Seed

Seeding method shall be Broadcast Seeding. Seeding procedure shall ensure even coverage. Gravity feed applicators, which drop seed directly from a hopper onto the prepared soil, shall not be used because of the difficulty in achieving even coverage, unless otherwise approved. Absorbent polymer powder shall be mixed with the dry seed at the rate recommended by the manufacturer.

3.3.1.1 Broadcast Seeding

Seed shall be uniformly broadcast using broadcast seeders. Half the total rate of seed application shall be broadcast in 1 direction, with the remainder of the seed rate broadcast at 90 degrees from the first direction. Seed shall be covered a maximum 1/4 inch depth by disk harrow, steel mat drag, cultipacker, or other approved device.

3.3.1.2 Rolling

The entire area shall be firmed with a roller not exceeding 90 pounds per foot roller width. Slopes over a maximum 3-horizontal-to-1 vertical shall not be rolled. Areas seeded with seed drills equipped with rollers shall not be rolled.

3.3.2 Mulching

3.3.2.1 Hay or Straw Mulch

Hay or straw mulch shall be spread uniformly at the rate of 2 tons per acre. Mulch shall be spread by hand, blower-type mulch spreader, or other approved method. Mulching shall be started on the windward side of relatively flat areas or on the upper part of steep slopes, and continued uniformly until the area is covered. The mulch shall not be bunched or clumped. Sunlight shall not be completely excluded from penetrating to the ground surface. All areas installed with seed shall be mulched on the same day as the seeding. Mulch shall be anchored immediately following spreading.

3.3.2.2 Mechanical Anchor

Mechanical anchor shall be a V-type-wheel land packer; a scalloped-disk land packer designed to force mulch into the soil surface; or other suitable equipment.

3.3.2.3 Asphalt Adhesive Tackifier

Asphalt adhesive tackifier shall be sprayed at a rate between 10 to 13 gallons per 1000 square feet. Sunlight shall not be completely excluded from penetrating to the ground surface.

3.3.2.4 Non-Asphaltic Tackifier

Hydrophilic colloid shall be applied at the rate recommended by the manufacturer, using hydraulic equipment suitable for thoroughly mixing with water. A uniform mixture shall be applied over the area.

3.3.2.5 Asphalt Adhesive Coated Mulch

Hay or straw mulch may be spread simultaneously with asphalt adhesive applied at a rate between 10 to 13 gallons per 1000 square feet, using power mulch equipment which shall be equipped with suitable asphalt pump and nozzle. The adhesive-coated mulch shall be applied evenly over the surface. Sunlight shall not be completely excluded from penetrating to the ground surface.

3.3.2.6 Wood Cellulose Fiber, Paper Fiber, and Recycled Paper

Wood cellulose fiber, paper fiber, or recycled paper shall be applied as part of the hydroseeding operation. The mulch shall be mixed and applied in accordance with the manufacturer's recommendations.

3.3.3 Watering Seed

Watering shall be started immediately after completing the seeding of an area. Water shall be applied to supplement rainfall at a rate sufficient to ensure moist soil conditions to a minimum 1 inch depth. Run-off and puddling shall be prevented. Watering trucks shall not be driven over turf areas, unless otherwise directed. Watering of other adjacent areas or plant material shall be prevented.

3.4 SURFACE EROSION CONTROL

3.4.1 Temporary Seeding

When directed during contract delays affecting the seeding operation or when a quick cover is required to prevent surface erosion, the areas designated shall be seeded in accordance with temporary seed species listed under Paragraph SEED.

3.4.1.1 Soil Amendments

When soil amendments have not been applied to the area, the quantity of 1/2 of the required soil amendments shall be applied and the area tilled in accordance with paragraph SITE PREPARATION. The area shall be watered in accordance with paragraph Watering Seed.

3.4.1.2 Remaining Soil Amendments

The remaining soil amendments shall be applied in accordance with the paragraph Tillage when the surface is prepared for installing seed.

3.5 QUANTITY CHECK

For materials provided in bags, the empty bags shall be retained for recording the amount used. For materials provided in bulk, the weight

certificates shall be retained as a record of the amount used. The amount of material used shall be compared with the total area covered to determine the rate of application used. Differences between the quantity applied and the quantity specified shall be adjusted as directed.

3.6 RESTORATION AND CLEAN UP

3.6.1 Restoration

Existing turf areas, pavements, and facilities that have been damaged from the seeding operation shall be restored to original condition at Contractor's expense.

3.6.2 Clean Up

Excess and waste material shall be removed from the seeded areas and shall be disposed offsite. Adjacent paved areas shall be cleaned.

3.7 PROTECTION OF INSTALLED AREAS

Immediately upon completion of the seeding operation in an area, the area shall be protected against traffic or other use by erecting barricades and providing signage as required, or as directed. Signage shall be in accordance with Section 10430 EXTERIOR SIGNAGE.

3.8 SEED ESTABLISHMENT PERIOD

3.8.1 Commencement

The seed establishment period to obtain a healthy stand of grass plants shall begin on the first day of work under this contract and shall end 3 months after the last day of the seeding operation. Written calendar time period shall be furnished for the seed establishment period. The seed establishment period shall be modified for inclement weather, shut down periods, or for separate completion dates of areas.

3.8.2 Satisfactory Stand of Grass Plants

Grass plants shall be evaluated for species and health when the grass plants are a minimum 1 inch high.

3.8.2.1 Lawn Area

A satisfactory stand of grass plants from the seeding operation for a lawn area shall be a minimum 20 grass plants per square foot. Bare spots shall be a maximum 9 inches square. The total bare spots shall be a maximum 2 percent of the total seeded area.

3.8.3 Maintenance During Establishment Period

Maintenance of the seeded areas shall include eradicating weeds, insects and diseases; protecting embankments and ditches from surface erosion; maintaining erosion control materials and mulch; protecting installed areas from traffic; mowing; watering; and post-fertilization.

3.8.3.1 Mowing

a. Lawn Areas: Lawn areas shall be mowed to a minimum 3 inch height when the turf is a maximum 4 inches high. Clippings shall be

removed when the amount cut prevents sunlight from reaching the ground surface.

3.8.3.2 Post-Fertilization

The fertilizer shall be applied as recommended by the soil test. A maximum 1/2 pound per 1000 square feet of actual available nitrogen shall be provided to the grass plants. The application shall be timed prior to the advent of winter dormancy and shall be made without burning the installed grass plants.

3.8.3.3 Repair or Reinstall

Unsatisfactory stand of grass plants and mulch shall be repaired or reinstalled, and eroded areas shall be repaired in accordance with paragraph SITE PREPARATION.

3.8.3.4 Maintenance Record

A record of each site visit shall be furnished, describing the maintenance work performed; areas repaired or reinstalled; and diagnosis for unsatisfactory stand of grass plants.

-- End of Section --

SECTION 02935
TURF

03/98

PART 1 GENERAL

1.1 REFERENCES

The publications listed below form a part of this specification to the extent referenced. The publications are referred to in the text by basic designation only.

AGRICULTURAL MARKETING SERVICE (AMS)

AMS-01	(Amended thru: Aug 1988) Federal Seed Act Regulations (Part 201-202)

AMERICAN SOCIETY FOR TESTING AND MATERIALS (ASTM)

ASTM D 2607	(1969) Peats, Mosses, Humus, and Related Products

COMMERCIAL ITEM DESCRIPTIONS (CID)

CID A-A-1909	(Basic; Notice 1) Fertilizer

1.2 SUBMITTALS

Government approval is required for submittals with a "GA" designation; submittals having an "FIO" designation are for information only. The following shall be submitted in accordance with Section 01300 SUBMITTAL PROCEDURES:

SD-01 Data

Manufacturer's Literature.

Manufacturer's literature discussing physical characteristics, application and installation instructions for erosion control material, and for chemical treatment material.

SD-08 Statements

Delivery.

Delivery schedule, at least 10 days prior to the intended date of the first delivery.

Application of Pesticide.

Pesticide treatment plan with proposed sequence of pesticide treatment work. The pesticide trade name, chemical composition, formulation, concentration, application rate of active ingredients and method of application for all materials; and the name and state license number of the state certified applicator shall be included.

Maintenance Report.

Written record of maintenance work performed.

Turf Establishment Period.

Written calendar time period for the turf establishment period. When there is more than one turf establishment period, the boundaries of the turfed area covered for each period shall be described.

SD-13 Certificates

Certificates of compliance certifying that materials meet the requirements specified, prior to the delivery of materials. Certified copies of the reports for the following materials shall be included:

Seed; FIO.

For mixture, percent pure live seed, minimum percent germination and hard seed, maximum percent weed seed content, date tested and state certification.

Fertilizer; FIO.

For chemical analysis, composition percent.

Agricultural Limestone.

For calcium carbonate equivalent and sieve analysis.

Peat.

For compliance with ASTM D 2607.

Pesticide Material.

For EPA registration number and registered uses.

Topsoil.

For pH, particle size, chemical analysis and mechanical analysis.

1.3 DELIVERY, INSPECTION, STORAGE, AND HANDLING

1.3.1 Delivery

1.3.1.1 Topsoil

A soil test shall be provided for topsoil delivered to the site.

1.3.1.2 Soil Amendments

Soil amendments shall be delivered to the site in the original, unopened containers bearing the manufacturer's chemical analysis. In lieu of containers, soil amendments may be furnished in bulk. A chemical analysis shall be provided for bulk deliveries.

1.3.1.3 Pesticide

Pesticide material shall be delivered to the site in the original, unopened

containers bearing legible labels indicating the Environmental Protection Agency (EPA) registration number and the manufacturer's registered uses.

1.3.2 Inspection

Seed or sod shall be inspected upon arrival at the job site by the Contracting Officer for conformity to type and quality in accordance with paragraph MATERIALS. Other materials shall be inspected for meeting specified requirements and unacceptable materials shall be removed from the job site.

1.3.3 Storage

Materials shall be stored in areas designated by the Contracting Officer. Sod shall be lightly sprinkled with water, covered with moist burlap, straw, or other covering and protected from exposure to wind and direct sunlight until planted. Covering for sod shall allow air to circulate and prevent internal heat from building up. Seed, lime and fertilizer shall be stored in cool, dry locations away from contaminants. Chemical treatment materials shall not be stored with other landscape materials.

1.3.4 Handling

1.3.4.1 Materials

Care shall be taken to avoid injury to sod. Except for bulk deliveries, materials shall not be dropped or dumped from vehicles.

PART 2 PRODUCTS

2.1 MATERIALS

2.1.1 Seed

2.1.1.1 Seed Classification

State-approved seed of the latest season's crop shall be provided in original sealed packages bearing the producer's guaranteed analysis for percentages of mixture, purity, germination, hard seed, weed seed content, and inert material. Labels shall be in conformance with AMS-01 and applicable state seed laws.

2.1.1.2 Seed Mixtures

Seed mixtures shall be proportioned by weight as follows: Kentucky 31 or turf-type fescue.

2.1.1.3 Quality

Weed seed shall not exceed 1 percent by weight of the total mixture. Wet, moldy, or otherwise damaged seed shall be rejected.

2.1.1.4 Temporary Seed

The temporary seed for erosion control shall be as follows:

Botanical Name	Common Name	Percent Pure Live Seed
[_____]	[_____]	[_____]

2.1.1.5 Seed Mixing

The field mixing of seed shall be performed on site in the presence of the Contracting Officer.

2.1.2 Topsoil

2.1.2.1 Topsoil Materials

Topsoil shall be natural, friable, loam topsoil possessing the characteristics of representative soils in the vicinity that produce heavy growths of crops, grass, or other vegetation, and shall be obtained from naturally well drained areas. The topsoil shall be free from subsoil, clay lumps, brush, objectionable weeds, and other litter, and shall be free from stones, stumps, and other objects larger than one-half inch in diameter, from roots and toxic substances, and from any other material or substance that might be harmful to plant growth or to be a hindrance to grading, planting, and maintenance operations.

2.1.3.2 Existing Topsoil

Existing topsoil on the project site, providing it meets the aforementioned characteristics, shall be stripped to the depth indicated and stockpiled on the site in accordance with Section 02221 and 02222, and amended by the addition of lime as a pH adjuster at the rate necessary to bring the soil pH within a range of 6.2 to 7.0.

2.1.3.3 Additional Topsoil

Additional topsoil, if required beyond that available from stripping operations, shall be a natural, friable soil representative of productive soils in the vicinity. It shall be obtained from well-drained borrow areas, provided by the Contractor, and shall be free of any admixture of subsoil, foreign matter, objects larger than one inch in any dimension, toxic substances, and any material or substance that may be harmful to plant growth. The pH range shall be 6.2 to 7.0. Topsoil that does not meet this pH range shall be amended by the addition of pH adjusters, at a rate recommended based on soil tests.

2.1.3 Soil Amendments

Soil amendments shall consist of lime, fertilizer, organic soil amendments and soil conditioners meeting the following requirements.

2.1.3.1 Lime

Lime shall be agricultural limestone and shall have a minimum calcium carbonate equivalent of 90 percent and shall be ground to such a fineness that at least 90 percent will pass a 10-mesh sieve and at least 50 percent will pass a 60-mesh sieve.

2.1.3.2 Fertilizer

Fertilizer shall be commercial grade, free flowing, uniform in composition and conforming to CID A-A-1909. Granular Fertilizer: As recommended by the soil test.

2.1.4.3 Organic Soil Amendments

a. Peat: Peat moss derived from a bog, swampland or marsh shall conform to ASTM D 2607.

b. Sand: Clean, free of toxic materials; 95 percent by weight shall pass a No. 10 sieve and 10 percent by weight shall pass a No. 16 sieve.

2.1.5 Mulch

Mulch shall be free from weeds, mold, and other deleterious materials.

2.1.4 Wood Cellulose Fiber

Wood cellulose fiber shall not contain any growth or germination-inhibiting factors and shall be dyed an appropriate color to facilitate visual metering during application. Composition on air-dry weight basis: 9 to 15 percent moisture, pH range from 4.5 to 6.0.

2.1.5.5 Paper Fiber Mulch

Paper fiber mulch shall be recycled news print that is shredded for the purpose of mulching seed.

2.1.5 Water

Water shall not contain elements toxic to plant life.

2.1.6 Pesticide

Pesticide shall be insecticide, herbicide, fungicide, nematocide, rodenticide and miticide. For the purpose of this specification, soil fumigant shall have the same requirements as a pesticide. The pesticide material shall be EPA registered and approved insecticide, herbicide, fungicide, nematocide, rodenticide, miticide, and soil fumigant.

2.1.7 Erosion Control Material

Soil erosion control shall conform to the following:

2.1.7.1 Soil Erosion Control Blanket

Machine produced mat of wood excelsior formed from a web of interlocking wood fibers, covered on one side with either knitted straw blanket-like mat construction, covered with biodegradable plastic mesh, or interwoven biodegradable thread, plastic netting or twisted kraft paper cord netting.

2.1.7.2 Soil Erosion Control Fabric

Knitted construction of polypropylene yarn with uniform mesh openings 3/4 to 1 inch square with strips of biodegradable paper. Filler paper strips shall last 6 to 8 months.

2.1.7.3 Soil Erosion Control Net

Heavy, twisted jute mesh weighing approximately 1.22 pounds per linear yard and 4 feet wide with mesh openings of approximately 1 inch square.

2.1.7.4 Soil Erosion Control Chemicals

High-polymer synthetic resin or cold-water emulsion of selected petroleum resins.

2.1.7.5 Hydrophilic Colloids

Hydrophilic colloids shall be physiologically harmless to plant and animal life, without phytotoxic agents. Colloids shall be naturally occurring, silicate powder based, and shall form a water insoluble membrane after curing. Colloids must resist mold growth.

2.1.7.6 Anchors

Erosion control anchor material shall be as recommended by the manufacturer.

PART 3 EXECUTION

3.1 SEEDING AND SODDING TIMES AND CONDITIONS

3.1.1 Seeding Time

Seed shall be sown from March to May for spring planting and from September to October for fall planting.

3.1.3 Turfing Conditions

Turf operations shall be performed only during periods when beneficial results can be obtained. When drought, excessive moisture or other unsatisfactory conditions prevail, the work shall be stopped when directed. When special conditions warrant a variance to the turf operations, proposed times shall be submitted to and approved by the Contracting Officer.

3.1.2 Areas To be Treated

Areas to be treated shall include the following:

a. All ground areas disturbed during the course of construction and within the limits of contract shall be topsoiled, tilled, limed, fertilized, seeded, and mulched.

b. Areas to be seeded are indicated on the drawings.

3.2 SITE PREPARATION

3.2.1 Grading

The Contracting Officer shall verify that finished grades are as indicated on drawings, and the placing of topsoil and the smooth grading has been completed in accordance with Section 02210 GRADING.

3.2.2 Application of Soil Amendments

3.2.2.1 Soil Test

A soil test shall be performed for pH, chemical analysis and mechanical analysis to establish the quantities and type of soil amendments required to meet local growing conditions for the type and variety of turf specified.

3.2.2.2 Lime

Lime shall be applied at the rate recommended by the soil test. Lime shall be incorporated into the soil to a minimum depth of 4 inches or may be incorporated as part of the tillage operation.

3.2.2.3 Fertilizer

Fertilizer shall be applied at the rate recommended by the soil test. Fertilizer shall be incorporated into the soil to a minimum depth of 4 inches and may be incorporated as part of the tillage or hydroseeding operation.

3.2.2.4 Soil Conditioner

Soil Conditioner shall be spread uniformly over the soil to a minimum depth of 2 inches and thoroughly incorporated by tillage into the soil to a minimum depth of 4 inches.

3.2.3 Tillage

3.2.3.1 Minimum Depth

Soil on slopes gentler than 3-horizontal-to-1-vertical shall be tilled to a minimum depth of 4 inches. On slopes between 3-horizontal-to-1-vertical and 1-horizontal-to-1 vertical, the soil shall be tilled to a minimum depth of 2 inches by scarifying with heavy rakes, or other method. Rototillers shall be used where soil conditions and length of slope permit. On slopes 1-horizontal-to-1 vertical and steeper, no tillage is required.

3.2.4 Finished Grading

3.2.4.1 Placing Topsoil

Topsoil shall be distributed uniformly and spread evenly to an average thickness of three inches, with a minimum thickness of two inches. Topsoil shall be spread so that planting can proceed with little additional soil preparation or additional tillage. Surface irregularities resulting from topsoiling or other operations shall be leveled to prevent depressions. Grade shall be adjusted to assure that planted grade will be one inch below adjoining grade of any surfaced area. Topsoil shall not be placed when the subgrade is frozen, excessively wet, extremely dry, excessively compacted, or in a condition detrimental to the proposed planting or grading. Soil compacted by construction equipment or soil on compacted cut slopes of grades shall be pulverized to a minimum depth of two inches by disking or plowing before applying topsoil.

3.2.4.2 Preparation

Turf areas shall be filled as needed or have surplus soil removed to attain the finished grade. Drainage patterns shall be maintained as indicated on drawings. Turf areas compacted by construction operations shall be

completely pulverized by tillage. Soil used for repair of erosion or grade deficiencies shall conform to topsoil requirements specified in Section 02210 GRADING. Finished grade shall be 1 inch below the adjoining grade of any surfaced area. New surfaces shall be blended to existing areas.

3.2.4.3 Lawn Area Debris

Lawn areas shall have debris and stones larger than 1 inch in any dimension removed from the surface.

3.2.4.4 Field Area Debris

Field areas shall have debris and stones larger than 3 inchesin any dimension removed from the surface.

3.2.4.5 Protection

Finished graded areas shall be protected from damage by vehicular or pedestrian traffic and erosion.

3.3 SEEDING

3.3.1 General

Prior to seeding, any previously prepared seedbed areas compacted or damaged by interim rain, traffic or other cause, shall be reworked to restore the ground condition previously specified. Seeding operations shall not take place when the wind velocity will prevent uniform seed distribution.

3.3.2 Equipment Calibration

The equipment to be used and the methods of turfing shall be subject to the inspection and approval of the Contracting Officer prior to commencement of turfing operations. Immediately prior to the commencement of turfing operations, the Contractor shall conduct turfing equipment calibration tests in the presence of the Contracting Officer.

3.3.3 Applying Seed

3.3.3.1 Broadcast Seeding

Seed shall be uniformly broadcast at the rate of [_____] pounds per 1000 square feet using broadcast seeders. Half of seed shall be broadcast in one direction, and the remainder at right angles to the first direction. Seed shall be covered to an average depth of 1/4 inch by disk harrow, steel mat drag, cultipacker, or other approved device.

3.3.3.2 Drill Seeding

Seed shall be uniformly drilled to an average depth of 1/2 inch and at the rate of [_____] pounds per 1000 square feet using equipment having drills not more than 6-1/2 inches apart. Row markers shall be used with the drill seeder.

3.3.3.3 Rolling

Immediately after seeding, except for slopes 3-horizontal-to-1 vertical and greater, the entire area shall be firmed with a roller not exceeding 90

pounds for each foot of roller width. Areas seeded with seed drills equipped with rollers shall not be rolled.

3.3.4 Hydroseeding

Seed and fertilizer shall be added to water and thoroughly mixed at the rates specified. Wood cellulose fiber mulch shall be added at the rates recommended by the manufacturer after the seed, fertilizer and water have been thoroughly mixed, to produce a homogeneous slurry. Slurry shall be uniformly applied under pressure over the entire area. The hydroseeded area shall not be rolled.

3.3.5 Mulch

3.3.5.1 Straw or Hay Mulch

Straw or hay mulch shall be spread uniformly at the rate of 2 tons per acre. Mulch shall be spread by hand, blower-type mulch spreader or other approved method. Mulching shall be started on the windward side of relatively flat areas or on the upper part of a steep slope and continued uniformly until the area is covered. The mulch shall not be bunched. All seeded areas shall be mulched on the same day as the seeding.

3.3.5.2 Mechanically Anchoring

Immediately following spreading, the mulch shall be anchored to the soil by a V-type-wheel land packer, a scalloped-disk land packer designed to force mulch into the soil surface, or other suitable equipment.

3.3.5.3 Non-Asphaltic Tackifier

Hydrophilic colloid shall be applied at rate recommended by manufacturer. Apply with hydraulic equipment suitable for mixing and applying uniform mixture of tackifier.

3.3.5.4 Wood Cellulose Fiber

Wood cellulose fiber mulch for use with the hydraulic application of seed and fertilizer shall be applied as part of the hydroseeding operation.

3.3.6 Water

Watering shall be started within 7 days after completing the seeded area. Water shall be applied at a rate sufficient to ensure moist soil conditions to a minimum depth of 1 inch. Run-off and puddling shall be prevented.

3.4 SODDING

3.4.1 General

Areas shall be sodded as indicated. Adequate soil moisture shall be ensured prior to sodding by spraying water on the area to be sodded and wetting the soil to a minimum depth of 1 inch.

3.4.2 Placing Sod

Rows of sod shall be placed parallel to and tightly against each other. Joints shall be staggered laterally. The sod strips shall not be stretched or overlapped. All joints shall be butted tight. Voids and air drying of

roots shall be prevented. On long slopes, sod shall be laid at right angles to slopes. In ditches, sod shall be laid at right angles to the flow of water. When required, the sod shall be anchored by placing anchors a minimum distance of 2 feet on center with a minimum of 2 anchors per sod section.

3.4.3 Finishing

Air pockets shall be eliminated and a true and even surface shall be provided by tamping or rolling the sod in place. Displacement of the sod shall be assured by knitting of sod to the soil. Frayed edges shall be trimmed and holes or missing corners shall be patched in the sod.

3.4.4 Watering Sod

Watering shall be started immediately after completing each day of sodding. Water shall be applied at a rate sufficient to ensure moist soil conditions to a minimum depth of 1 inch. Run-off and puddling shall be prevented.

3.5 EROSION CONTROL

3.5.1 Erosion Control Material

Erosion control material, where indicated or required, shall be installed in accordance with manufacturer's instructions. Placement of the erosion control material shall be accomplished without damage to installed material or without deviation to finished grade.

3.5.2 Temporary Turf Cover

3.5.2.1 General

When there are contract delays in the turfing operation or a quick cover is required to prevent erosion, the areas designated for turf shall be seeded with a temporary seed as directed by the Contracting Officer.

3.5.2.2 Application

When no other turfing materials have been applied, the quantity of one half of the required soil amendments shall be applied and the area tilled in accordance with paragraph SITE PREPARATION. Seed shall be uniformly broadcast and applied at the rate of [_____] pounds per 1000 square feet. The area shall be watered as required.

3.6 APPLICATION OF PESTICIDE

When pesticide becomes necessary to remove a pest or disease, a state-certified applicator shall apply required pesticides in accordance with EPA label restrictions and recommendations. Hydraulic equipment shall be provided for the liquid application of pesticides with a leak-proof tank, positive agitation methods, controlled application pressure and metering gauges. A pesticide plan shall be provided to the Contracting Officer as stated in paragraph SUBMITTALS.

3.7 RESTORATION AND CLEAN UP

3.7.1 Restoration

Existing turf areas, pavements and facilities that have been damaged from

the turfing operation shall be restored to original condition at Contractor's expense.

3.7.2 Clean Up

Excess and waste material shall be removed from the planting operation and shall be disposed of off the site. Adjacent paved areas shall be cleaned.

3.8 PROTECTION OF TURFED AREAS

Immediately after turfing, the area shall be protected against traffic or other use by erecting barricades and providing signage as required, or as directed by the Contracting Officer.

3.9 TURF ESTABLISHMENT PERIOD

3.9.1 Commencement

The Turf Establishment Period for establishing a healthy stand of turf shall begin on the first day of work under this contract and shall end three (3) months after the last day of turfing operations required by this contract. Written calendar time period shall be furnished to the Contracting Officer for the Turf Establishment Period. When there is more than one turf establishment period, describe the boundaries of the turfed area covered for each period.

3.9.2 Satisfactory Stand of Turf

3.9.2.1 Seeded Area

a. Lawn Area: A satisfactory stand of turf from the seeding operation for a lawn area is defined as a minimum of 15 grass plants per square foot. Bare spots shall be no larger than 6 inches square. The total bare spots shall not exceed 2 percent of the total seeded area.

b. Field Area: A satisfactory stand of turf from the seeding operation for a field area is defined as a minimum of 10 grass plants per square foot. The total bare spots shall not exceed 2 percent of the total seeded area.

3.9.2.2 Sodded Area

A satisfactory stand of turf from the sodding operation is defined as living sod uniform in color and leaf texture. Bare spots shall be no larger than 2 inches square.

3.9.3 Maintenance During Establishment Period

3.9.3.1 General

Maintenance of the turfed areas shall include eradicating weeds, eradicating insects and diseases, protecting embankments and ditches from erosion, maintaining erosion control materials and mulch, protecting turfed areas from traffic, mowing, watering, and post-fertilization.

3.9.3.2 Mowing

a. Lawn Areas: Lawn areas shall be mowed to a minimum height of 2

inches when the average height of the turf becomes 3 inches. Clippings shall be removed when the amount of cut turf is heavy enough to damage the turfed areas.

b. Field Areas: Field areas shall be mowed once during the season to a minimum height of 2 inches.

3.9.3.3 Watering

Watering shall be at intervals to obtain a moist soil condition to a minimum depth of 1 inch. Frequency of watering and quantity of water shall be adjusted in accordance with the growth of the turf. Run-off, puddling and wilting shall be prevented.

3.9.3.4 Post-Fertilization

Nitrogen carrier fertilizer shall be applied at the rate of [_____] pounds per 1000 square feet after the first month and again prior to the final acceptance. The application shall be timed prior to the advent of winter dormancy and shall avoid excessively high nitrogen levels.

3.9.3.5 Pesticide

Treatment for disease or pest shall be in accordance with paragraph APPLICATION OF PESTICIDE.

3.9.3.6 Repair

The Contractor shall re-establish as specified herein, eroded, damaged or barren areas. Mulch shall also be repaired or replaced as required.

3.9.3.7 Maintenance Report

A written record shall be furnished to the Contracting Officer of the maintenance work performed.

3.10 FINAL ACCEPTANCE

3.10.1 Preliminary Inspection

Prior to the completion of the Turf Establishment Period, a preliminary inspection shall be held by the Contracting Officer. Time for the inspection shall be established in writing. The acceptability of the turf in accordance with the Turf Establishment Period shall be determined. An unacceptable stand of turf shall be repaired as soon as turfing conditions permit.

3.10.2 Final Inspection

A final inspection shall be held by the Contracting Officer to determine that deficiencies noted in the preliminary inspection have been corrected. Time for the inspection shall be established in writing.

-- End of Section --

SECTION 03100A

STRUCTURAL CONCRETE FORMWORK
05/98

PART 1 GENERAL

1.1 REFERENCES

The publications listed below form a part of this specification to the extent referenced. The publications are referred to in the text by basic designation only.

ACI INTERNATIONAL (ACI)

ACI 347R	(1994) Guide to Formwork for Concrete

AMERICAN HARDBOARD ASSOCIATION (AHA)

AHA A135.4	(1995) Basic Hardboard

AMERICAN SOCIETY FOR TESTING AND MATERIALS (ASTM)

ASTM C 578	(1995) Rigid, Cellular Polystyrene Thermal Insulation

U.S. DEPARTMENT OF COMMERCE (DOC)

DOC PS 1	(1996) Voluntary Product Standard - Construction and Industrial Plywood

1.2 SUBMITTALS

Government approval is required for submittals with a "G" designation; submittals not having a "G" designation are for information only. When used, a designation following the "G" designation identifies the office that will review the submittal for the Government. The following shall be submitted in accordance with Section 01330 SUBMITTAL PROCEDURES:

SD-02 Shop Drawings

Formwork

Drawings showing details of formwork, including dimensions of fiber voids, joints, supports, studding and shoring, and sequence of form and shoring removal.

SD-03 Product Data

Design

Design analysis and calculations for form design and methodology used in the design.

Form Materials

Manufacturer's data including literature describing form materials, accessories, and form releasing agents.

Form Releasing Agents

Manufacturer's recommendation on method and rate of application of form releasing agents.

SD-04 Samples

Fiber Voids

One sample unit of fiber voids prior to installation of the voids.

SD-07 Certificates

Fiber Voids

Certificates attesting that fiber voids conform to the specified requirements.

1.3 DESIGN

Formwork shall be designed in accordance with methodology of ACI 347R for anticipated loads, lateral pressures, and stresses. Forms shall be capable of producing a surface which meets the requirements of the class of finish specified in Section 03300 CAST-IN-PLACE STRUCTURAL CONCRETE. Forms shall be capable of withstanding the pressures resulting from placement and vibration of concrete.

1.4 STORAGE AND HANDLING

Fiber voids shall be stored above ground level in a dry location. Fiber voids shall be kept dry until installed and overlaid with concrete.

PART 2 PRODUCTS

2.1 FORM MATERIALS

2.1.1 Forms For Class A and Class B Finish

Forms for Class A and Class B finished surfaces shall be plywood panels conforming to DOC PS 1, Grade B-B concrete form panels, Class I or II. Other form materials or liners may be used provided the smoothness and appearance of concrete produced will be equivalent to that produced by the plywood concrete form panels. Forms for round columns shall be the prefabricated seamless type.

2.1.2 Forms For Class C Finish

Forms for Class C finished surfaces shall be shiplap lumber; plywood conforming to DOC PS 1, Grade B-B concrete form panels, Class I or II; tempered concrete form hardboard conforming to AHA A135.4; other approved concrete form material; or steel, except that steel lining on wood sheathing shall not be used. Forms for round columns may have one vertical seam.

2.1.3 Forms For Class D Finish

Forms for Class D finished surfaces, except where concrete is placed against earth, shall be wood or steel or other approved concrete form material.

2.1.4 Form Ties

Form ties shall be factory-fabricated metal ties, shall be of the removable or internal disconnecting or snap-off type, and shall be of a design that will not permit form deflection and will not spall concrete upon removal. Solid backing shall be provided for each tie. Except where removable tie rods are used, ties shall not leave holes in the concrete surface less than 1/4 inch nor more than 1 inch deep and not more than 1 inchin diameter. Removable tie rods shall be not more than 1-1/2 inches in diameter.

2.1.5 Form Releasing Agents

Form releasing agents shall be commercial formulations that will not bond with, stain or adversely affect concrete surfaces. Agents shall not impair subsequent treatment of concrete surfaces depending upon bond or adhesion nor impede the wetting of surfaces to be cured with water or curing compounds.

2.1.6 Fiber Voids

Fiber voids shall be the product of a reputable manufacturer regularly engaged in the commercial production of fiber voids. The voids shall be constructed of double faced, corrugated fiberboard. The corrugated fiberboard shall be fabricated of standard kraft paper liners, impregnated with paraffin, and laminated with moisture resistant adhesive, and shall have a board strength of 275 psi. Voids which are impregnated with paraffin after construction, in lieu of being constructed with paraffin impregnated fiberboard, are acceptable. Voids shall be designed to support not less than 1000 psf. To prevent separation during concrete placement fiber voids shall be assembled with steel or plastic banding at 4 feet on center maximum, or by adequate stapling or gluing as recommended by the manufacturer. Fiber voids placed under concrete slabs and that are 8 inches in depth may be heavy duty "waffle box" type, constructed of paraffin impregnated corrugated fiberboard.

2.2 FIBER VOID RETAINERS

2.2.1 Polystyrene Rigid Insulation

Polystyrene rigid insulation shall conform to ASTM C 578, Type V, VI, or VII, square edged. Size shall be 1-1/2 inches thick by 16 inches in height by 3 feet in length, unless otherwise indicated.

PART 3 EXECUTION

3.1 INSTALLATION

3.1.1 Formwork

Forms shall be mortar tight, properly aligned and adequately supported to produce concrete surfaces meeting the surface requirements specified in Section 03300 CAST-IN-PLACE STRUCTURAL CONCRETE and conforming to

construction tolerance given in TABLE 1. Where concrete surfaces are to have a Class A or Class B finish, joints in form panels shall be arranged as approved. Where forms for continuous surfaces are placed in successive units, the forms shall fit over the completed surface to obtain accurate alignment of the surface and to prevent leakage of mortar. Forms shall not be reused if there is any evidence of surface wear and tear or defects which would impair the quality of the surface. Surfaces of forms to be reused shall be cleaned of mortar from previous concreting and of all other foreign material before reuse. Form ties that are to be completely withdrawn shall be coated with a nonstaining bond breaker.

3.1.2 Fiber Voids

Voids shall be placed on a smooth firm dry bed of suitable material, to avoid being displaced vertically, and shall be set tight, with no buckled cartons, in order that horizontal displacement cannot take place. Each section of void shall have its ends sealed by dipping in paraffin, with any additional cutting of voids at the jobsite to be field dipped in the same type of sealer, unless liners and flutes are completely impregnated with paraffin. Prior to placing reinforcement, the entire formed area for slabs shall be covered with a 4 x 8 feet minimum flat sheets of fiber void corrugated fiberboard. Joints shall be sealed with a moisture resistant tape having a minimum width of 3 inches. If voids are destroyed or damaged and are not capable of supporting the design load, they shall be replaced prior to placing of concrete.

3.1.3 Fiber Void Retainers

Fiber void retainers shall be installed, continuously, on both sides of fiber voids placed under grade beams in order to retain the cavity after the fiber voids biodegrade.

3.2 CHAMFERING

Except as otherwise shown, external corners that will be exposed shall be chamfered, beveled, or rounded by moldings placed in the forms.

3.3 COATING

Forms for Class A and Class B finished surfaces shall be coated with a form releasing agent before the form or reinforcement is placed in final position. The coating shall be used as recommended in the manufacturer's printed or written instructions. Forms for Class C and D finished surfaces may be wet with water in lieu of coating immediately before placing concrete, except that in cold weather with probable freezing temperatures, coating shall be mandatory. Surplus coating on form surfaces and coating on reinforcing steel and construction joints shall be removed before placing concrete.

3.4 REMOVAL OF FORMS

Forms shall be removed preventing injury to the concrete and ensuring the complete safety of the structure. Formwork for columns, walls, side of beams and other parts not supporting the weight of concrete may be removed when the concrete has attained sufficient strength to resist damage from the removal operation but not before at least 24 hours has elapsed since concrete placement. Supporting forms and shores shall not be removed from beams, floors and walls until the structural units are strong enough to carry their own weight and any other construction or natural loads.

Supporting forms or shores shall not be removed before the concrete strength has reached 70 percent of design strength, as determined by field cured cylinders or other approved methods. This strength shall be demonstrated by job-cured test specimens, and by a structural analysis considering the proposed loads in relation to these test strengths and the strength of forming and shoring system. The job-cured test specimens for form removal purposes shall be provided in numbers as directed and shall be in addition to those required for concrete quality control. The specimens shall be removed from molds at the age of 24 hours and shall receive, insofar as possible, the same curing and protection as the structures they represent.

TABLE 1

TOLERANCES FOR FORMED SURFACES

1. Variations from the plumb:	In any 10 feet of length ---------- 1/4 inch
a. In the lines and surfaces of columns, piers, walls and in arises	Maximum for entire length ---------- 1 inch
b. For exposed corner columns,control-joint grooves, and other conspicuous lines	In any 20 feet of length ---------- ---- 1/4 inch Maximum for entire length---------- 1/2 inch
2. Variation from the level or from the grades indicated on the drawings:	In any 10 feet of length ----------1/4 inch In any bay or in any 20 feet of length---------- 3/8 inch
a. In slab soffits, ceilings, beam soffits, and in arises, measured before removal of supporting shores	Maximum for entire length ---------- 3/4 inch
b. In exposed lintels, sills, parapets, horizontal grooves, and other conspicuous lines	In any bay or in any 20 feet of length ---------- ----- 1/4 inch Maximum for entire length---------- 1/2 inch
3. Variation of the linear building lines from established position in plan	In any 20 feet --------- 1/2 inch Maximum ----------1 inch
4. Variation of distance between walls, columns, partitions	1/4 inch per 10 feet of distance, but not more than 1/2 inch in any one bay,and not more than 1 inch total variation
5. Variation in the sizes and locations	Minus ---------- 1/4 inch Plus ---------- 1/2 inch

TABLE 1

TOLERANCES FOR FORMED SURFACES

of sleeves, floor openings, and wall opening	
6. Variation in cross-sectional dimensions of columns and beams and in the thickness of slabs and walls	Minus ---------- 1/4 inch Plus ---------- 1/2 inch
7. Footings:	
a. Variation of dimensions in plan	Minus ---------- 1/2 inch Plus ---------- 2 inches when formed or plus 3 inches when placed against unformed excavation
b. Misplacement of eccentricity	2 percent of the footing width in the direction of misplacement but not more than 2 inches
c. Reduction in thickness of specified thickness	Minus ---------- 5 percent
8. Variation in steps:	Riser ---------- 1/8 inch
a. In a flight of stairs	Tread ---------- 1/4 inch
b. In consecutive steps	Riser ---------- 1/16 inch Tread ---------- 1/8 inch

-- End of Section --

SECTION 03150A

EXPANSION JOINTS, CONTRACTION JOINTS, AND WATERSTOPS
05/98

PART 1 GENERAL

1.1 REFERENCES

The publications listed below form a part of this specification to the extent referenced. The publications are referred to in the text by basic designation only.

AMERICAN ASSOCIATION OF STATE HIGHWAY AND TRANSPORTATION OFFICIALS (AASHTO)

AASHTO T 111	(1983; R 1996)) Inorganic Matter or Ash in Bituminous Materials

AMERICAN HARDBOARD ASSOCIATION (AHA)

AHA A135.4	(1995) Basic Hardboard

AMERICAN SOCIETY FOR TESTING AND MATERIALS (ASTM)

ASTM A 109/A 109M	(1998a) Steel, Strip, Carbon, Cold-Rolled
ASTM A 167	(1999) Stainless and Heat-Resisting Chromium-Nickel Steel Plate, Sheet, and Strip
ASTM A 480/A 480M	(1999b) General Requirements for Flat-Rolled Stainless and Heat-Resisting Steel Plate, Sheet, and Strip
ASTM A 570/A 570M	(1998) Steel, Sheet and Strip, Carbon, Hot-Rolled, Structural Quality
ASTM B 152	(1997a) Copper Sheet, Strip, Plate, and Rolled Bar
ASTM B 370	(1998) Copper Sheet and Strip for Building Construction
ASTM C 919	(1984; R 1998) Use of Sealants in Acoustical Applications
ASTM C 920	(1998) Elastomeric Joint Sealants
ASTM D 4	(1986; R 1998) Bitumen Content
ASTM D 6	(1995) Loss on Heating of Oil and Asphaltic Compounds

ASTM D 412	(1998a) Vulcanized Rubber and Thermoplastic Rubbers and Thermoplastic Elastomers - Tension
ASTM D 471	(1998el) Rubber Property - Effect of Liquids
ASTM D 1190	(1997) Concrete Joint Sealer, Hot-Applied Elastic Type
ASTM D 1191	(1984; R 1994el) Concrete Joint Sealers
ASTM D 1751	(1999) Preformed Expansion Joint Filler for Concrete Paving and Structural Construction (Nonextruding and Resilient Bituminous Types)
ASTM D 1752	(1984; R 1996el) Preformed Sponge Rubber and Cork Expansion Joint Fillers for Concrete Paving and Structural Construction
ASTM D 1854	(1996) Jet-Fuel-Resistant Concrete Joint Sealer, Hot-Poured Elastic Type
ASTM D 2628	(1991; R 1998) Preformed Polychloroprene Elastomeric Joint Seals for Concrete Pavements
ASTM D 2835	(1989; R 1998) Lubricant for Installation of Preformed Compression Seals in Concrete Pavements
ASTM D 5249	(1995) Backer Material for Use With Cold and Hot-Applied Joint Sealants in Portland-Cement Concrete and Asphalt Joints
ASTM D 5329	(1996) Standard Test Method for Sealants and Fillers, Hot-Applied, for Joints and Cracks in Asphaltic and Portland Cement Concrete Pavements

U.S. ARMY CORPS OF ENGINEERS (USACE)

COE CRD-C 513	(1974) Corps of Engineers Specifications for Rubber Waterstops
COE CRD-C 572	(1974) Corps of Engineers Specifications for Polyvinylchloride Waterstop

1.2 SUBMITTALS

Government approval is required for submittals with a "G" designation; submittals not having a "G" designation are for information only. When used, a designation following the "G" designation identifies the office that will review the submittal for the Government. The following shall be submitted in accordance with Section 01330 SUBMITTAL PROCEDURES:

SD-02 Shop Drawings

Waterstops

Shop drawings and fabrication drawings provided by the manufacturer or prepared by the Contractor.

SD-03 Product Data

Preformed Expansion Joint Filler
Sealant
Waterstops

Manufacturer's literature, including safety data sheets, for preformed fillers and the lubricants used in their installation; field-molded sealants and primers (when required by sealant manufacturer); preformed compression seals; and waterstops.

Manufacturer's recommended instructions for installing preformed fillers, field-molded sealants; preformed compression seals; and waterstops; and for splicing non-metallic waterstops.

SD-04 Samples

Lubricant for Preformed Compression Seals

Specimens identified to indicate the manufacturer, type of material, size and quantity of material, and shipment or lot represented. Each sample shall be a piece not less than 9 ft of 1 inch nominal width or wider seal or a piece not less than 12 ft of compression seal less than 1 inch nominal width. One quart of lubricant shall be provided.

Field-Molded Type

One gallon of field-molded sealant and one quart of primer (when primer is recommended by the sealant manufacturer) identified to indicate manufacturer, type of material, quantity, and shipment or lot represented.

Non-metallic Materials

Specimens identified to indicate manufacturer, type of material, size, quantity of material, and shipment or lot represented. Each sample shall be a piece not less than 12 inch long cut from each 200 ft of finished waterstop furnished, but not less than a total of 4 ft of each type, size, and lot furnished. One splice sample of each size and type for every 50 splices made in the factory and every 10 splices made at the job site. The splice samples shall be made using straight run pieces with the splice located at the mid-length of the sample and finished as required for the installed waterstop. The total length of each splice shall be not less than 12 inches long.

SD-07 Certificates

Preformed Expansion Joint Filler
Sealant
Waterstops

Certificates of compliance stating that the joint filler and sealant materials and waterstops conform to the requirements specified.

1.3 DELIVERY AND STORAGE

Material delivered and placed in storage shall be stored off the ground and protected from moisture, dirt, and other contaminants. Sealants shall be delivered in the manufacturer's original unopened containers. Sealants whose shelf life has expired shall be removed from the site.

PART 2 PRODUCTS

2.1 CONTRACTION JOINT STRIPS

Contraction joint strips shall be 1/8 inch thick tempered hardboard conforming to AHA A135.4, Class 1. In lieu of hardboard strips, rigid polyvinylchloride (PVC) or high impact polystyrene (HIPS) insert strips specifically designed to induce controlled cracking in slabs on grade may be used. Such insert strips shall have removable top section.

2.2 PREFORMED EXPANSION JOINT FILLER

Expansion joint filler shall be preformed material conforming to ASTM D 1751 or ASTM D 1752. Unless otherwise indicated, filler material shall be 3/8 inch thick and of a width applicable for the joint formed. Backer material, when required, shall conform to ASTM D 5249.

2.3 SEALANT

Joint sealant shall conform to the following:

2.3.1 Preformed Polychloroprene Elastomeric Type

ASTM D 2628.

2.3.2 Lubricant for Preformed Compression Seals

ASTM D 2835.

2.3.3 Hot-Poured Type

ASTM D 1190 tested in accordance with ASTM D 1191.

2.3.4 Field-Molded Type

ASTM C 920, Type M for horizontal joints or Type NS for vertical joints, Class 25, and Use NT. Bond breaker material shall be polyethylene tape, coated paper, metal foil or similar type materials. The back-up material shall be compressible, non-shrink, nonreactive with sealant, and non-absorptive material type such as extruded butyl or polychloroprene rubber.

2.3.5 Hot-Applied Jet-Fuel Resistant Type

ASTM D 1854 tested in accordance with ASTM D 5329.

2.4 WATERSTOPS

Intersection and change of direction waterstops shall be shop fabricated.

2.4.1 Flexible Metal

Copper waterstops shall conform to ASTM B 152 and ASTM B 370, O60 soft anneal temper and 20 oz mass per sq ft sheet thickness. Stainless steel waterstops shall conform to ASTM A 167 and ASTM A 480/A 480M, UNS S30453 (Type 304L), and 20 gauge thick strip.

2.4.2 Rigid Metal

Flat steel waterstops shall conform to ASTM A 109/A 109M, No. 2 (half hard) temper, No. 2 edge, No. 1 (matte or dull) finish or ASTM A 570/A 570M, Grade 40.

2.4.3 Non-Metallic Materials`

Non-metallic waterstops shall be manufactured from a prime virgin resin; reclaimed material is not acceptable. The compound shall contain plasticizers, stabilizers, and other additives to meet specified requirements. Rubber waterstops shall conform to COE CRD-C 513. Polyvinylchloride waterstops shall conform to COE CRD-C 572. Thermoplastic elastomeric rubber waterstops shall conform to ASTM D 471.

2.4.4 Non-Metallic Hydrophilic

Swellable strip type compound of polymer modified chloroprene rubber that swells upon contact with water shall conform to ASTM D 412 as follows: Tensile strength 420 psi minimum; ultimate elongation 600 percent minimum. Hardness shall be 50 minimum on the type A durometer and the volumetric expansion ratio in distilled water at 70 degrees F shall be 3 to 1 minimum.

2.4.5 Preformed Elastic Adhesive

Preformed plastic adhesive waterstops shall be produced from blends of refined hydrocarbon resins and plasticizing compounds reinforced with inert mineral filler, and shall contain no solvents, asbestos, irritating fumes or obnoxious odors. The compound shall not depend on oxidizing, evaporating, or chemical action for its adhesive or cohesive strength.

2.4.5.1 Chemical Composition

The chemical composition of the sealing compound shall meet the requirements shown below:

PERCENT BY WEIGHT

COMPONENT	MIN.	MAX.	TEST
Bitumen (Hydrocarbon plastic)	50	70	ASTM D 4
Inert Mineral Filler	30	50	AASHTO T 111
Volatile Matter		2	ASTM D 6

2.4.5.2 Adhesion Under Hydrostatic Pressure

The sealing compound shall not leak at the joints for a period of 24 hours under a vertical 6 foot head pressure. In a separate test, the sealing compound shall not leak under a horizontal pressure of 10 psi which is

reached by slowly applying increments of 2 psi every minute.

2.4.5.3 Sag of Flow Resistance

Sagging shall not be detected when tested as follows: Fill a wooden form 1 inch wide and 6 inches long flush with sealing compound and place in an oven at 135 degrees F in a vertical position for 5 days.

2.4.5.4 Chemical Resistance

The sealing compound when immersed separately in a 5% solution of caustic potash, a 5% solution of hydrochloric acid, 5% solution of sulfuric acid and a saturated hydrogen sulfide solution for 30 days at ambient room temperature shall show no visible deterioration.

PART 3 EXECUTION

3.1 JOINTS

Joints shall be installed at locations indicated and as authorized.

3.1.1 Contraction Joints

Contraction joints may be constructed by inserting tempered hardboard strips or rigid PVC or HIPS insert strips into the plastic concrete using a steel parting bar, when necessary, or by cutting the concrete with a saw after concrete has set. Joints shall be approximately 1/8 inch wide and shall extend into the slab one-fourth the slab thickness, minimum, but not less than 1 inch.

3.1.1.1 Joint Strips

Strips shall be of the required dimensions and as long as practicable. After the first floating, the concrete shall be grooved with a tool at the joint locations. The strips shall be inserted in the groove and depressed until the top edge of the vertical surface is flush with the surface of the slab. The slab shall be floated and finished as specified. Working of the concrete adjacent to the joint shall be the minimum necessary to fill voids and consolidate the concrete. Where indicated, the top portion of the strip shall be sawed out after the curing period to form a recess for sealer. The removable section of PVC or HIPS strips shall be discarded and the insert left in place. True alignment of the strips shall be maintained during insertion.

3.1.1.2 Sawed Joints

Joint sawing shall be early enough to prevent uncontrolled cracking in the slab, but late enough that this can be accomplished without appreciable spalling. Concrete sawing machines shall be adequate in number and power, and with sufficient replacement blades to complete the sawing at the required rate. Joints shall be cut to true alignment and shall be cut in sequence of concrete placement. Sludge and cutting debris shall be removed.

3.1.2 Expansion Joints

Preformed expansion joint filler shall be used in expansion and isolation joints in slabs around columns and between slabs on grade and vertical surfaces where indicated. The filler shall extend the full slab depth, unless otherwise indicated. The edges of the joint shall be neatly

finished with an edging tool of 1/8 inch radius, except where a resilient floor surface will be applied. Where the joint is to receive a sealant, the filler strips shall be installed at the proper level below the finished floor with a slightly tapered, dressed and oiled wood strip temporarily secured to the top to form a recess to the size shown on the drawings. The wood strip shall be removed after the concrete has set. Contractor may opt to use a removable expansion filler cap designed and fabricated for this purpose in lieu of the wood strip. The groove shall be thoroughly cleaned of laitance, curing compound, foreign materials, protrusions of hardened concrete, and any dust which shall be blown out of the groove with oil-free compressed air.

3.1.3 Joint Sealant

Sawed contraction joints and expansion joints in slabs shall be filled with joint sealant, unless otherwise shown. Joint surfaces shall be clean, dry, and free of oil or other foreign material which would adversely affect the bond between sealant and concrete. Joint sealant shall be applied as recommended by the manufacturer of the sealant.

3.1.3.1 Joints With Preformed Compression Seals

Compression seals shall be installed with equipment capable of installing joint seals to the prescribed depth without cutting, nicking, twisting, or otherwise distorting or damaging the seal or concrete and with no more than 5 percent stretching of the seal. The sides of the joint and, if necessary, the sides of the compression seal shall be covered with a coating of lubricant. Butt joints shall be coated with liberal applications of lubricant.

3.1.3.2 Joints With Field-Molded Sealant

Joints shall not be sealed when the sealant material, ambient air, or concrete temperature is less than 40 degrees F. When the sealants are meant to reduce the sound transmission characteristics of interior walls, ceilings, and floors the guidance provided in ASTM C 919 shall be followed. Joints requiring a bond breaker shall be coated with curing compound or with bituminous paint. Bond breaker and back-up material shall be installed where required. Joints shall be primed and filled flush with joint sealant in accordance with the manufacturer's recommendations.

3.2 WATERSTOPS, INSTALLATION AND SPLICES

Waterstops shall be installed at the locations shown to form a continuous water-tight diaphragm. Adequate provision shall be made to support and completely protect the waterstops during the progress of the work. Any waterstop punctured or damaged shall be repaired or replaced. Exposed waterstops shall be protected during application of form release agents to avoid being coated. Suitable guards shall be provided to protect exposed projecting edges and ends of partially embedded waterstops from damage when concrete placement has been discontinued. Splices shall be made by certified trained personnel using approved equipment and procedures.

3.2.1 Copper And Stainless Steel

Splices in copper waterstops shall be lap joints made by brazing. Splices in stainless steel waterstops shall be welded using a TIG or MIG process utilizing a weld rod to match the stainless. All welds shall not be annealed to maintain physical properties. Carbon flame shall not be used

in the annealing process. Damaged waterstops shall be repaired by removing damaged portions and patching. Patches shall overlap a minimum of 1 inch onto undamaged portion of the waterstop.

3.2.2 Flat Steel

Splices in flat steel waterstops shall be properly aligned, butt welded, and cleaned of excessive material.

3.2.3 Non-Metallic

Fittings shall be shop made using a machine specifically designed to mechanically weld the waterstop. A miter guide, proper fixturing (profile dependant), and portable power saw shall be used to miter cut the ends to be joined to ensure good alignment and contact between joined surfaces. The splicing of straight lengths shall be done by squaring the ends to be joined. Continuity of the characteristic features of the cross section of the waterstop (ribs, tabular center axis, protrusions, etc.) shall be maintained across the splice.

3.2.3.1 Rubber Waterstop

Splices shall be vulcanized or shall be made using cold bond adhesive as recommended by the manufacturer. Splices for TPE-R shall be as specified for PVC.

3.2.3.2 Polyvinyl Chloride Waterstop

Splices shall be made by heat sealing the adjacent waterstop edges together using a thermoplastic splicing iron utilizing a non-stick surface specifically designed for waterstop welding. The correct temperature shall be used to sufficiently melt without charring the plastic. The spliced area, when cooled, shall show no signs of separation, holes, or other imperfections when bent by hand in as sharp an angle as possible.

3.2.3.3 Quality Assurance

Edge welding will not be permitted. Centerbulbs shall be compressed or closed when welding to non-centerbulb type. Waterstop splicing defects which are unacceptable include, but are not limited to the following: 1) Tensile strength less than 80 percent of parent section. 2) Free lap joints. 3) Misalignment of centerbulb, ribs, and end bulbs greater than 1/16 inch. 4) Misalignment which reduces waterstop cross section more than 15 percent. 5) Bond failure at joint deeper than 1/16 inch or 15 percent of material thickness. 6) Misalignment of waterstop splice resulting in misalignment of waterstop in excess of 1/2 inch in 10 feet. 7) Visible porosity in the weld area, including pin holes. 8) Charred or burnt material. 9) Bubbles or inadequate bonding. 10) Visible signs of splice separation when cooled splice is bent by hand at a sharp angle.

3.2.4 Non-Metallic Hydrophilic Waterstop Installation

Ends to be joined shall be miter cut with sharp knife or shears. The ends shall be adhered with cyanacryiate (super glue) adhesive. When joining hydrophilic type waterstop to PVC waterstop, the hydrophilic waterstop shall be positioned as shown on the drawings. A liberal amount of a single component hydrophilic sealant shall be applied to the junction to complete the transition.

3.2.5 Preformed Plastic Adhesive Installation

The installation of preformed plastic adhesive waterstops shall be a prime, peel, place and pour procedure. Joint surfaces shall be clean and dry before priming and just prior to placing the sealing strips. The end of each strip shall be spliced to the next strip with a 1 inch overlap; the overlap shall be pressed firmly to release trapped air. During damp or cold conditions the joint surface shall be flashed with a safe, direct flame to warm and dry the surface adequately; the sealing strips shall be dipped in warm water to soften the material to achieve maximum bond to the concrete surface.

3.3 CONSTRUCTION JOINTS

Construction joints are specified in Section 03300 CAST-IN-PLACE STRUCTURAL CONCRETE except that construction joints coinciding with expansion and contraction joints shall be treated as expansion or contraction joints as applicable.

-- End of Section --

SECTION 03200A

CONCRETE REINFORCEMENT
09/97

PART 1 GENERAL

1.1 REFERENCES

The publications listed below form a part of this specification to the extent referenced. The publications are referred to in the text by basic designation only.

ACI INTERNATIONAL (ACI)

ACI 318/318R	(1995) Building Code Requirements for Structural Concrete and Commentary

AMERICAN SOCIETY FOR TESTING AND MATERIALS (ASTM)

ASTM A 53	(1999) Pipe, Steel, Black and Hot-Dipped, Zinc-Coated, Welded and Seamless
ASTM A 82	(1997a) Steel Wire, Plain, for Concrete Reinforcement
ASTM A 184/A 184M	(1996) Fabricated Deformed Steel Bar Mats for Concrete Reinforcement
ASTM A 496	(1997) Steel Wire, Deformed, for Concrete Reinforcement
ASTM A 497	(1997) Steel Welded Wire Fabric, Deformed, for Concrete Reinforcement
ASTM A 615/A 615M	(1996a) Deformed and Plain Billet-Steel Bars for Concrete Reinforcement
ASTM A 675/A 675M	(1990a; R 1995e1) Steel Bars, Carbon, Hot-Wrought, Special Quality, Mechanical Properties
ASTM A 706/A 706M	(1998) Low-Alloy Steel Deformed and Plain Bars for Concrete Reinforcement
ASTM A 767/A 767M	(1997) Zinc-Coated (Galvanized) Steel Bars in Concrete Reinforcement
ASTM A 775/A 775M	(1997e1) Epoxy-Coated Reinforcement Steel Bars
ASTM A 884/A 884M	(1996ae1) Epoxy-Coated Steel Wire and Welded Wire Fabric for Reinforcement
ASTM C 1116	(1995) Fiber-Reinforced Concrete and

Shotcrete

AMERICAN WELDING SOCIETY (AWS)

AWS D1.4	(1998) Structural Welding Code - Reinforcing Steel

CONCRETE REINFORCING STEEL INSTITUTE (CRSI)

CRSI MSP-1	(1996) Manual of Standard Practice

1.2 SUBMITTALS

Government approval is required for submittals with a "G" designation; submittals not having a "G" designation are for information only. When used, a designation following the "G" designation identifies the office that will review the submittal for the Government. The following shall be submitted in accordance with Section 01330 SUBMITTAL PROCEDURES:

SD-02 Shop Drawings

Reinforcement

Detail drawings showing reinforcing steel placement, schedules, sizes, grades, and splicing and bending details. Drawings shall show support details including types, sizes and spacing.

SD-03 Product Data

Welding

A list of qualified welders names.

SD-07 Certificates

Reinforcing Steel

Certified copies of mill reports attesting that the reinforcing steel furnished contains no less than 25 percent recycled scrap steel and meets the requirements specified herein, prior to the installation of reinforcing steel.

1.3 WELDING

Welders shall be qualified in accordance with AWS D1.4. Qualification test shall be performed at the worksite and the Contractor shall notify the Contracting Officer 24 hours prior to conducting tests. Special welding procedures and welders qualified by others may be accepted as permitted by AWS D1.4.

1.4 DELIVERY AND STORAGE

Reinforcement and accessories shall be stored off the ground on platforms, skids, or other supports.

PART 2 PRODUCTS

2.1 DOWELS

Dowels shall conform to ASTM A 675/A 675M, Grade 80. Steel pipe conforming to ASTM A 53, Schedule 80, may be used as dowels provided the ends are closed with metal or plastic inserts or with mortar.

2.2 FABRICATED BAR MATS

Fabricated bar mats shall conform to ASTM A 184/A 184M.

2.3 REINFORCING STEEL

Reinforcing steel shall be deformed bars conforming to ASTM A 615/A 615M or ASTM A 706/A 706M, grades and sizes as indicated. Cold drawn wire used for spiral reinforcement shall conform to ASTM A 82. In highly corrosive environments or when directed by the Contracting Officer, reinforcing steel shall conform to ASTM A 767/A 767M or ASTM A 775/A 775M as appropriate.

2.4 WELDED WIRE FABRIC

Welded wire fabric shall conform to ASTM A 496 or ASTM A 497. When directed by the Contracting Officer for special applications, welded wire fabric shall conform to ASTM A 884/A 884M.

2.5 WIRE TIES

Wire ties shall be 16 gauge or heavier black annealed steel wire.

2.6 SUPPORTS

Bar supports for formed surfaces shall be designed and fabricated in accordance with CRSI MSP-1 and shall be steel or precast concrete blocks. Precast concrete blocks shall have wire ties and shall be not less than 4 inches square when supporting reinforcement on ground. Precast concrete block shall have compressive strength equal to that of the surrounding concrete. Where concrete formed surfaces will be exposed to weather or where surfaces are to be painted, steel supports within 1/2 inch of concrete surface shall be galvanized, plastic protected or of stainless steel. Concrete supports used in concrete exposed to view shall have the same color and texture as the finish surface. For slabs on grade, supports shall be precast concrete blocks, plastic coated steel fabricated with bearing plates, or specifically designed wire-fabric supports fabricated of plastic.

2.7 SYNTHETIC FIBER REINFORCEMENT

Synthetic fiber shall be polypropylene with a denier less than 100 and a nominal fiber length of 2 inches.

PART 3 EXECUTION

3.1 REINFORCEMENT

Reinforcement shall be fabricated to shapes and dimensions shown and shall conform to the requirements of ACI 318/318R. Reinforcement shall be cold bent unless otherwise authorized. Bending may be accomplished in the field or at the mill. Bars shall not be bent after embedment in concrete. Safety caps shall be placed on all exposed ends of vertical concrete reinforcement bars that pose a danger to life safety. Wire tie ends shall face away from the forms.

3.1.1 Placement

Reinforcement shall be free from loose rust and scale, dirt, oil, or other deleterious coating that could reduce bond with the concrete. Reinforcement shall be placed in accordance with ACI 318/318R at locations shown plus or minus one bar diameter. Reinforcement shall not be continuous through expansion joints and shall be as indicated through construction or contraction joints. Concrete coverage shall be as indicated or as required by ACI 318/318R. If bars are moved more than one bar diameter to avoid interference with other reinforcement, conduits or embedded items, the resulting arrangement of bars, including additional bars required to meet structural requirements, shall be approved before concrete is placed.

3.1.2 Splicing

Splices of reinforcement shall conform to ACI 318/318R and shall be made only as required or indicated. Splicing shall be by lapping or by mechanical or welded butt connection; except that lap splices shall not be used for bars larger than No. 11 unless otherwise indicated. Welding shall conform to AWS D1.4. Welded butt splices shall be full penetration butt welds. Lapped bars shall be placed in contact and securely tied or spaced transversely apart to permit the embedment of the entire surface of each bar in concrete. Lapped bars shall not be spaced farther apart than one-fifth the required length of lap or 6 inches. Mechanical butt splices shall be in accordance with the recommendation of the manufacturer of the mechanical splicing device. Butt splices shall develop 125 percent of the specified minimum yield tensile strength of the spliced bars or of the smaller bar in transition splices. Bars shall be flame dried before butt splicing. Adequate jigs and clamps or other devices shall be provided to support, align, and hold the longitudinal centerline of the bars to be butt spliced in a straight line.

3.2 WELDED-WIRE FABRIC PLACEMENT

Welded-wire fabric shall be placed in slabs as indicated. Fabric placed in slabs on grade shall be continuous between expansion, construction, and contraction joints. Fabric placement at joints shall be as indicated. Lap splices shall be made in such a way that the overlapped area equals the distance between the outermost crosswires plus 2 inches. Laps shall be staggered to avoid continuous laps in either direction. Fabric shall be wired or clipped together at laps at intervals not to exceed 4 feet. Fabric shall be positioned by the use of supports.

3.3 DOWEL INSTALLATION

Dowels shall be installed in slabs on grade at locations indicated and at right angles to joint being doweled. Dowels shall be accurately positioned and aligned parallel to the finished concrete surface before concrete placement. Dowels shall be rigidly supported during concrete placement. One end of dowels shall be coated with a bond breaker.

3.4 SYNTHETIC FIBER REINFORCED CONCRETE

Fiber reinforcement shall be added to the concrete mix in accordance with the applicable sections of ASTM C 1116 and the recommendations of the manufacturer, and in an amount of 0.1 percent by volume.

3.5 SPECIAL INSPECTION AND TESTING FOR SEISMIC-RESISTING SYSTEMS

Special inspections and testing for seismic-resisting systems and components shall be done in accordance with Section 01452 SPECIAL INSPECTION FOR SEISMIC-RESISTING SYSTEMS.

-- End of Section --

SECTION 03300

CAST-IN-PLACE STRUCTURAL CONCRETE
05/01

PART 1 GENERAL

1.1 REFERENCES

The publications listed below form a part of this specification to the extent referenced. The publications are referred to in the text by basic designation only.

ACI INTERNATIONAL (ACI)

ACI 117/117R	(1990; Errata) Standard Tolerances for Concrete Construction and Materials
ACI 211.1	(1991) Standard Practice for Selecting Proportions for Normal, Heavyweight, and Mass Concrete
ACI 214.3R	(1988; R 1997) Simplified Version of the Recommended Practice for Evaluation of Strength Test Results of Concrete
ACI 305R	(1999) Hot Weather Concreting
ACI 318/318R	(1999) Building Code Requirements for Structural Concrete and Commentary

AMERICAN ASSOCIATION OF STATE HIGHWAY AND TRANSPORTATION OFFICIALS (AASHTO)

AASHTO M 182	(1991; R 1996) Burlap Cloth Made From Jute or Kenaf

AMERICAN SOCIETY FOR TESTING AND MATERIALS (ASTM)

ASTM C 31/C 31M	(2000) Making and Curing Concrete Test Specimens in the Field
ASTM C 33	(1999ael) Concrete Aggregates
ASTM C 39/C 39M	(1999) Compressive Strength of Cylindrical Concrete Specimens
ASTM C 42/C 42M	(1999) Obtaining and Testing Drilled Cores and Sawed Beams of Concrete
ASTM C 78	(1994) Flexural Strength of Concrete (Using Simple Beam With Third-Point Loading)
ASTM C 94/C 94M	(2000) Ready-Mixed Concrete

ASTM C 136	(1996a) Sieve Analysis of Fine and Coarse Aggregates
ASTM C 143/C 143M	(2000) Slump of Hydraulic Cement Concrete
ASTM C 150	(1999a) Portland Cement
ASTM C 171	(1997a) Sheet Materials for Curing Concrete
ASTM C 172	(1999) Sampling Freshly Mixed Concrete
ASTM C 173	(1994ael) Air Content of Freshly Mixed Concrete by the Volumetric Method
ASTM C 192/C 192M	(2000) Making and Curing Concrete Test Specimens in the Laboratory
ASTM C 231	(1997el) Air Content of Freshly Mixed Concrete by the Pressure Method
ASTM C 260	(2000) Air-Entraining Admixtures for Concrete
ASTM C 309	(1998a) Liquid Membrane-Forming Compounds for Curing Concrete
ASTM C 494/C 494M	(1999a) Chemical Admixtures for Concrete
ASTM C 595	(2000a) Blended Hydraulic Cements
ASTM C 618	(2000) Coal Fly Ash and Raw or Calcined Natural Pozzolan for Use as a Mineral Admixture in Concrete
ASTM C 881	(1999) Epoxy-Resin-Base Bonding Systems for Concrete
ASTM C 937	(1997) Grout Fluidifier for Preplaced-Aggregate Concrete
ASTM C 940	(1998a) Expansion and Bleeding of Freshly Mixed Grouts for Preplaced-Aggregate Concrete in the Laboratory
ASTM C 1017/C 1017M	(1998) Chemical Admixtures for Use in Producing Flowing Concrete
ASTM C 1059	(1999) Latex Agents for Bonding Fresh to Hardened Concrete
ASTM C 1064/C 1064M	(1999) Temperature of Freshly Mixed Portland Cement Concrete
ASTM C 1077	(1998) Laboratories Testing Concrete and Concrete Aggregates for Use in Construction and Criteria for Laboratory Evaluation
ASTM C 1107	(1999) Packaged Dry, Hydraulic-Cement

	Grout (Nonshrink)
ASTM C 1116	(2000) Fiber-Reinforced Concrete and Shotcrete
ASTM C 1240	(2000) Silica Fume for Use as a Mineral Admixture in Hydraulic-Cement Concrete, Mortar and Grout
ASTM D 75	(1987; R 1997) Sampling Aggregates
ASTM D 1751	(1999) Preformed Expansion Joint Filler for Concrete Paving and Structural Construction (Nonextruding and Resilient Bituminous Types)
ASTM E 96	(2000) Water Vapor Transmission of Materials

U.S. ARMY CORPS OF ENGINEERS (USACE)

COE CRD-C 94	(1995) Surface Retarders
COE CRD-C 104	(1980) Method of Calculation of the Fineness Modulus of Aggregate
COE CRD-C 400	(1963) Requirements for Water for Use in Mixing or Curing Concrete
COE CRD-C 521	(1981) Standard Test Method for Frequency and Amplitude of Vibrators for Concrete
COE CRD-C 540	(1971; R 1981) Standard Specification for Nonbituminous Inserts for Contraction Joints in Portland Cement Concrete Airfield Pavements, Sawable Type
COE CRD-C 572	(1974) Corps of Engineers Specifications for Polyvinylchloride Waterstop

NATIONAL READY-MIXED CONCRETE ASSOCIATION (NRMCA)

NRMCA TMMB 100	(1994) Truck Mixer Agitator and Front Discharge Concrete Carrier Standards
NRMCA QC 3	(1984) Quality Control Manual: Section 3, Plant Certifications Checklist: Certification of Ready Mixed Concrete Production Facilities

1.2 LUMP SUM CONTRACT

Under this type of contract concrete items will be paid for by lump sum and will not be measured. The work covered by these items consists of furnishing all concrete materials, reinforcement, miscellaneous embedded materials, and equipment, and performing all labor for the forming, manufacture, transporting, placing, finishing, curing, and protection of concrete in these structures.

1.3 SUBMITTALS

Government approval is required for submittals with a "G" designation; submittals not having a "G" designation are for information only. When used, a designation following the "G" designation identifies the office that will review the submittal for the Government. The following shall be submitted in accordance with Section 01330 SUBMITTAL PROCEDURES:

SD-03 Product Data

Mixture Proportions, G

The results of trial mixture design studies along with a statement giving the maximum nominal coarse aggregate size and the proportions of ingredients that will be used in the manufacture of each strength or class of concrete, at least 14 days prior to commencing concrete placing operations. Aggregate weights shall be based on the saturated surface dry condition. The statement shall be accompanied by test results from an approved independent commercial testing laboratory, showing that mixture design studies have been made with materials proposed for the project and that the proportions selected will produce concrete of the qualities indicated. No substitutions shall be made in the materials used in the mixture design studies without additional tests to show that the quality of the concrete is satisfactory.

Dry Shake Finish

Manufacturer's written instructions on application of dry shake material 15 days prior to start of construction.

SD-04 Samples

Surface Retarder

Sample of surface retarder material with manufacturer's instructions for application in conjunction with air-water cutting.

SD-06 Test Reports

Testing and Inspection for Contractor Quality Control, G

Certified copies of laboratory test reports, including mill tests and all other test data, for portland cement, blended cement, pozzolan, ground granulated blast furnace slag, silica fume, aggregate, admixtures, and curing compound proposed for use on this project.

SD-07 Certificates

Qualifications

Written documentation for Contractor Quality Control personnel.

1.4 QUALIFICATIONS

Contractor Quality Control personnel assigned to concrete construction shall be American Concrete Institute (ACI) Certified Workmen in one of the following grades or shall have written evidence of having completed similar

qualification programs:

Concrete Field Testing Technician, Grade I
Concrete Laboratory Testing Technician, Grade I or II
Concrete Construction Inspector, Level II

Concrete Transportation Construction Inspector or
Reinforced Concrete Special Inspector, Jointly certified by American Concrete Institute (ACI), Building Official and Code Administrators International (BOCA), International Conference of Building Officials (ICBO), and Southern Building Code Congress International (SBCCI).

The foreman or lead journeyman of the flatwork finishing crew shall have similar qualification for ACI Concrete Flatwork Technician/Finisher or equal, with written documentation.

1.5 FIELD TEST PANELS

Field test panels shall be constructed prior to beginning of work using the materials and procedures proposed for use on the job, to demonstrate the results to be attained. The quality and appearance of each panel shall be subject to the approval of the Contracting Officer, and, if not judged satisfactory, additional panels shall be constructed until approval is attained. Formed or finished surfaces in the completed structure shall match the quality and appearance of the approved field example.

1.5.1 Sample Wall Panels

One sample panel at least 4 feet by 5 feetand 6 inches thick shall be constructed to demonstrate Class A formed finish and a similar one for Class B formed finish. Panels shall be located where directed by the Contracting Officer. Each panel shall include a full length and full width joint line and shall have at least two voids each at least 12 inches by 12 inches by 3 inches deep either impressed in the concrete as placed or chipped in the hardened concrete. After the concrete is 7 days old, the voids shall be patched to demonstrate the effectiveness and the appearance of the Contractor's repair procedures.

1.6 SPECIAL REQUIREMENTS

A pre-installation meeting with the Contracting Officer will be required at least 10 days prior to start of construction. The Contractor shall be responsible for calling the meeting; the Project Superintendent and active installation personnel shall be present.

1.7 GENERAL REQUIREMENTS

1.7.1 Tolerances

Except as otherwise specified herein, tolerances for concrete batching, mixture properties, and construction as well as definition of terms and application practices shall be in accordance with ACI 117/117R. Level and grade tolerance measurements of slabs shall be made as soon as possible after finishing; when forms or shoring are used, the measurements shall be made prior to removal.

1.7.1.1 Floors

For the purpose of this Section the following terminology correlation

between ACI 117/117R and this Section shall apply:

Floor Profile Quality Classification From ACI 117/117R	This Section
Conventional Bullfloated	Same
Conventional Straightedged	Same
Flat	Float Finish or Trowel Finish

Levelness tolerance shall not apply where design requires floors to be sloped to drains or sloped for other reasons.

1.7.1.2 Floors by the Straightedge System

The flatness of the floors shall be carefully controlled and the tolerances shall be measured by the straightedge system as specified in paragraph 4.5.7 of ACI 117/117R, using a 10 foot straightedge, within 72 hours after floor slab installation and before shores and/or forms are removed.

1.7.2 Strength Requirements and w/c Ratio

1.7.2.1 Strength Requirements

Specified compressive strength (f'c) shall be as follows:

COMPRESSIVE STRENGTH	STRUCTURE OR PORTION OF STRUCTURE
5000 psi	Pre-cast concrete
4000 psi	Footings, slabs-on-grade and retaining walls
5000 psi	All other concrete
4000 psi at 28 days	All areas except base slab and slab on-grade
3000 psi at 28 days	Base slab, slab on-grade

Concrete made with high-early strength cement shall have a 7-day strength equal to the specified 28-day strength for concrete made with Type I or II portland cement. Compressive strength shall be determined in accordance with ASTM C 39/C 39M. Flexural strength shall be determined in accordance with ASTM C 78.

a. Evaluation of Concrete Compressive Strength. Compressive strength specimens (6 by 12 inch cylinders) shall be fabricated by the Contractor and laboratory cured in accordance with ASTM C 31/C 31M and tested in accordance with ASTM C 39/C 39M. The strength of the concrete will be considered satisfactory so long as the average of all sets of three consecutive test results equals or exceeds the specified compressive strength f'c and no individual test result falls below the specified strength f'c by more than 500 psi. A "test" is defined as the average of two companion cylinders, or if only one cylinder is tested, the results of the single cylinder test. Additional analysis or testing, including

taking cores and/or load tests may be required at the Contractor's expense when the strength of the concrete in the structure is considered potentially deficient.

b. Investigation of Low-Strength Compressive Test Results. When any strength test of standard-cured test cylinders falls below the specified strength requirement by more than 500 psi or if tests of field-cured cylinders indicate deficiencies in protection and curing, steps shall be taken to assure that the load-carrying capacity of the structure is not jeopardized. When the strength of concrete in place is considered potentially deficient, cores shall be obtained and tested in accordance with ASTM C 42/C 42M. At least three representative cores shall be taken from each member or area of concrete in place that is considered potentially deficient. The location of cores will be determined by the Contracting Officer to least impair the strength of the structure. Concrete in the area represented by the core testing will be considered adequate if the average strength of the cores is equal to at least 85 percent of the specified strength requirement and if no single core is less than 75 percent of the specified strength requirement. Non-destructive tests (tests other than test cylinders or cores) shall not be used as a basis for acceptance or rejection. The Contractor shall perform the coring and repair the holes. Cores will be tested by the Government.

c. Load Tests. If the core tests are inconclusive or impractical to obtain or if structural analysis does not confirm the safety of the structure, load tests may be directed by the Contracting Officer in accordance with the requirements of ACI 318/318R. Concrete work evaluated by structural analysis or by results of a load test as being understrength shall be corrected in a manner satisfactory to the Contracting Officer. All investigations, testing, load tests, and correction of deficiencies shall be performed by and at the expense of the Contractor and must be approved by the Contracting Officer, except that if all concrete is found to be in compliance with the drawings and specifications, the cost of investigations, testing, and load tests will be at the expense of the Government.

d. Evaluation of Concrete Flexural Strength. Flexural strength specimens (beams) shall be fabricated by the Contractor and laboratory cured in accordance with ASTM C 31/C 31M and tested in accordance with ASTM C 78. The strength of the concrete will be considered satisfactory so long as the average of all sets of three consecutive test results equals or exceeds the specified flexural strength and no individual test result falls below the specified flexural strength by more than 50 psi.A "test" is defined as the average of two companion beams. Additional analysis or testing, including taking cores and/or load tests may be required at the Contractor's expense when the strength of the concrete in the slab is considered potentially deficient.

1.7.2.2 Water-Cement Ratio

Maximum water-cement ratio (w/c) for normal weight concrete shall be as follows:

WATER-CEMENT RATIO, BY WEIGHT	STRUCTURE OR PORTION OF STRUCTURE
0.40	All cast in place concrete

These w/c's may cause higher strengths than that required above for compressive or flexural strength. The maximum w/c required will be the equivalent w/c as determined by conversion from the weight ratio of water to cement plus pozzolan, silica fume, and ground granulated blast furnace slag (GGBF slag) by the weight equivalency method as described in ACI 211.1. In the case where silica fume or GGBF slag is used, the weight of the silica fume and GGBF slag shall be included in the equations of ACI 211.1 for the term P which is used to denote the weight of pozzolan.

1.7.3 Air Entrainment

All normal weight concrete shall be air entrained to contain between 4 and 7 percent total air, except that when the nominal maximum size coarse aggregate is 3/4 inch or smaller it shall be between 4.5 and 7.5 percent. Concrete with specified strength over 5000 psi may have 1.0 percent less air than specified above. Specified air content shall be attained at point of placement into the forms. Air content for normal weight concrete shall be determined in accordance with ASTM C 231.

1.7.4 Slump

Slump of the concrete, as delivered to the point of placement into the forms, shall be within the following limits. Slump shall be determined in accordance with ASTM C 143/C 143M.

Structural Element	Slump Minimum	Slump Maximum
Walls, columns and beams	2 in.	4 in.
Foundation walls, substructure walls, footings, slabs	1 in.	3 in.
Any structural concrete approved for placement by pumping:		
At pump	2 in.	6 in.
At discharge of line	1 in.	4 in.

When use of a plasticizing admixture conforming to ASTM C 1017/C 1017M or when a Type F or G high range water reducing admixture conforming to ASTM C 494/C 494M is permitted to increase the slump of concrete, concrete shall have a slump of 2 to 4 inches before the admixture is added and a maximum slump of 8 inches at the point of delivery after the admixture is added.

1.7.5 Concrete Temperature

The temperature of the concrete as delivered shall not exceed 90 degrees F. When the ambient temperature during placing is 40 degrees F or less, or is expected to be at any time within 6 hours after placing, the temperature of the concrete as delivered shall be between 55 and 75 degrees F.

1.7.6 Size of Coarse Aggregate

The largest feasible nominal maximum size aggregate (NMSA) specified in paragraph AGGREGATES shall be used in each placement. However, nominal maximum size of aggregate shall not exceed any of the following: three-fourths of the minimum cover for reinforcing bars, three-fourths of the minimum clear spacing between reinforcing bars, one-fifth of the narrowest dimension between sides of forms, or one-third of the thickness of slabs or toppings.

1.7.7 Special Properties and Products

Concrete may contain admixtures other than air entraining agents, such as water reducers, superplasticizers, or set retarding agents to provide special properties to the concrete, if specified or approved. Any of these materials to be used on the project shall be used in the mix design studies.

1.7.8 Lightweight Aggregate Structural Concrete

Lightweight aggregate structural concrete will not be permitted.

1.8 MIXTURE PROPORTIONS

Concrete shall be composed of portland cement, other cementitious and pozzolanic materials as specified, aggregates, water and admixtures as specified.

1.8.1 Proportioning Studies for Normal Weight Concrete

Trial design batches, mixture proportioning studies, and testing requirements for various classes and types of concrete specified shall be the responsibility of the Contractor. Except as specified for flexural strength concrete, mixture proportions shall be based on compressive strength as determined by test specimens fabricated in accordance with ASTM C 192/C 192M and tested in accordance with ASTM C 39/C 39M. Samples of all materials used in mixture proportioning studies shall be representative of those proposed for use in the project and shall be accompanied by the manufacturer's or producer's test reports indicating compliance with these specifications. Trial mixtures having proportions, consistencies, and air content suitable for the work shall be made based on methodology described in ACI 211.1, using at least three different water-cement ratios for each type of mixture, which will produce a range of strength encompassing those required for each class and type of concrete required on the project. The maximum water-cement ratios required in subparagraph Water-Cement Ratio will be the equivalent water-cement ratio as determined by conversion from the weight ratio of water to cement plus pozzolan, silica fume, and ground granulated blast furnace slag (GGBF slag) by the weight equivalency method as described in ACI 211.1. In the case where silica fume or GGBF slag is used, the weight of the silica fume and GGBF slag shall be included in the equations in ACI 211.1 for the term P, which is used to denote the weight of pozzolan. If pozzolan is used in the concrete mixture, the minimum pozzolan content shall be 15 percent by weight of the total cementitious material, and the maximum shall be 35 percent. Laboratory trial mixtures shall be designed for maximum permitted slump and air content. Separate sets of trial mixture studies shall be made for each combination of cementitious materials and each combination of admixtures proposed for use. No combination of either shall be used until proven by such studies, except that, if approved in writing and otherwise permitted by these

specifications, an accelerator or a retarder may be used without separate trial mixture study. Separate trial mixture studies shall also be made for concrete for any conveying or placing method proposed which requires special properties and for concrete to be placed in unusually difficult placing locations. The temperature of concrete in each trial batch shall be reported. For each water-cement ratio, at least three test cylinders for each test age shall be made and cured in accordance with ASTM C 192/C 192M. They shall be tested at 7 and 28 days in accordance with ASTM C 39/C 39M. From these test results, a curve shall be plotted showing the relationship between water-cement ratio and strength for each set of trial mix studies. In addition, a curve shall be plotted showing the relationship between 7 day and 28 day strengths. Each mixture shall be designed to promote easy and suitable concrete placement, consolidation and finishing, and to prevent segregation and excessive bleeding.

1.8.2 Proportioning Studies for Flexural Strength Concrete

Trial design batches, mixture proportioning studies, and testing requirements shall conform to the requirements specified in paragraph Proportioning Studies for Normal Weight Concrete, except that proportions shall be based on flexural strength as determined by test specimens (beams) fabricated in accordance with ASTM C 192/C 192M and tested in accordance with ASTM C 78. Procedures given in ACI 211.1 shall be modified as necessary to accommodate flexural strength.

1.8.3 Average Compressive Strength Required for Mixtures

The mixture proportions selected during mixture design studies shall produce a required average compressive strength (f'cr) exceeding the specified compressive strength (f'c) by the amount indicated below. This required average compressive strength, f'cr, will not be a required acceptance criteria during concrete production. However, whenever the daily average compressive strength at 28 days drops below f'cr during concrete production, or daily average 7-day strength drops below a strength correlated with the 28-day f'cr, the mixture shall be adjusted, as approved, to bring the daily average back up to f'cr. During production, the required f'cr shall be adjusted, as appropriate, based on the standard deviation being attained on the job.

1.8.3.1 Computations from Test Records

Where a concrete production facility has test records, a standard deviation shall be established in accordance with the applicable provisions of ACI 214.3R. Test records from which a standard deviation is calculated shall represent materials, quality control procedures, and conditions similar to those expected; shall represent concrete produced to meet a specified strength or strengths (f'c) within 1,000 psi of that specified for proposed work; and shall consist of at least 30 consecutive tests. A strength test shall be the average of the strengths of two cylinders made from the same sample of concrete and tested at 28 days. Required average compressive strength f'cr used as the basis for selection of concrete proportions shall be the larger of the equations that follow using the standard deviation as determined above:

$f'cr = f'c + 1.34S$ where units are in psi

$f'cr = f'c + 2.33S - 500$ where units are in psi

Where S = standard deviation

Where a concrete production facility does not have test records meeting the requirements above but does have a record based on 15 to 29 consecutive tests, a standard deviation shall be established as the product of the calculated standard deviation and a modification factor from the following table:

NUMBER OF TESTS	MODIFICATION FACTOR FOR STANDARD DEVIATION
15	1.16
20	1.08
25	1.03
30 or more	1.00

1.8.3.2 Computations without Previous Test Records

When a concrete production facility does not have sufficient field strength test records for calculation of the standard deviation, the required average strength f'cr shall be determined as follows:

a. If the specified compressive strength f'c is less than 3,000 psi,

f'cr = f'c + 1000 psi

b. If the specified compressive strength f'c is 3,000 to 5,000 psi,

f'cr = f'c + 1,200 psi

c. If the specified compressive strength f'c is over 5,000 psi,

f'cr = f'c + 1,400 psi

1.8.4 Average Flexural Strength Required for Mixtures

The mixture proportions selected during mixture design studies for flexural strength mixtures and the mixture used during concrete production shall be designed and adjusted during concrete production as approved, except that the overdesign for average flexural strength shall simply be 15 percent greater than the specified flexural strength at all times.

1.9 STORAGE OF MATERIALS

Cement and other cementitious materials shall be stored in weathertight buildings, bins, or silos which will exclude moisture and contaminants and keep each material completely separated. Aggregate stockpiles shall be arranged and used in a manner to avoid excessive segregation and to prevent contamination with other materials or with other sizes of aggregates. Aggregate shall not be stored directly on ground unless a sacrificial layer is left undisturbed. Reinforcing bars and accessories shall be stored above the ground on platforms, skids or other supports. Other materials shall be stored in such a manner as to avoid contamination and deterioration. Admixtures which have been in storage at the project site for longer than 6 months or which have been subjected to freezing shall not be used unless retested and proven to meet the specified requirements. Materials shall be capable of being accurately identified after bundles or containers are opened.

1.10 GOVERNMENT ASSURANCE INSPECTION AND TESTING

Day-to day inspection and testing shall be the responsibility of the Contractor Quality Control (CQC) staff. However, representatives of the Contracting Officer can and will inspect construction as considered appropriate and will monitor operations of the Contractor's CQC staff. Government inspection or testing will not relieve the Contractor of any of his CQC responsibilities.

1.10.1 Materials

The Government will sample and test aggregates, cementitious materials, other materials, and concrete to determine compliance with the specifications as considered appropriate. The Contractor shall provide facilities and labor as may be necessary for procurement of representative test samples. Samples of aggregates will be obtained at the point of batching in accordance with ASTM D 75. Other materials will be sampled from storage at the jobsite or from other locations as considered appropriate. Samples may be placed in storage for later testing when appropriate.

1.10.2 Fresh Concrete

Fresh concrete will be sampled as delivered in accordance with ASTM C 172 and tested in accordance with these specifications, as considered necessary.

1.10.3 Hardened Concrete

Tests on hardened concrete will be performed by the Government when such tests are considered necessary.

1.10.4 Inspection

Concrete operations may be tested and inspected by the Government as the project progresses. Failure to detect defective work or material will not prevent rejection later when a defect is discovered nor will it obligate the Government for final acceptance.

PART 2 PRODUCTS

2.1 CEMENTITIOUS MATERIALS

Cementitious Materials shall be portland cement or portland cement in combination with pozzolan or silica fume and shall conform to appropriate specifications listed below. Use of cementitious materials in concrete which will have surfaces exposed in the completed structure shall be restricted so there is no change in color, source, or type of cementitious material.

2.1.1 Portland Cement

ASTM C 150, Type I low alkali with a maximum 15 percent amount of tricalcium aluminate, or Type II low alkali or Type V. White portland cement shall meet the above requirements except that it may be Type I, Type II or Type III low alkali. White Type III shall be used only in specific areas of the structure, when approved in writing.

2.1.2 High-Early-Strength Portland Cement

ASTM C 150, Type III with tricalcium aluminate limited to 5 percent, low

alkali. Type III cement shall be used only in isolated instances and only when approved in writing.

2.1.3 Blended Cements

ASTM C 595, Type IP or IP (MS) or IP (MH).

2.1.4 Pozzolan (Fly Ash)

ASTM C 618, Class C with the optional requirements for multiple factor, drying shrinkage, and uniformity from Table 2A of ASTM C 618. Requirement for maximum alkalies from Table 1A of ASTM C 618 shall apply. If pozzolan is used, it shall never be less than 15 percent nor more than 35 percent by weight of the total cementitious material. Fly ash shall conform to EPA requirements in accordance with Section 01670 RECYCLED / RECOVERED MATERIALS.

2.1.5 Ground Granulated Blast-Furnace (GGBF) Slag

Ground Granulated Blast-Furnace (GGBF) slag will not be permitted.

2.1.6 Silica Fume

Silica fume shall conform to ASTM C 1240. Available alkalies shall conform to the optimal limit given in Table 2 of ASTM C 1240. Silica fume may be furnished as a dry, densified material or as a slurry. In accordance with paragraph Technical Service for Specialized Concrete, the Contractor shall provide at no cost to the Government the services of a manufacturer's technical representative experienced in mixing, proportioning, placement procedures, and curing of concrete containing silica fume.

2.2 AGGREGATES

Aggregates shall conform to the following.

2.2.1 Fine Aggregate

Fine aggregate shall conform to the quality and gradation requirements of ASTM C 33.

2.2.2 Coarse Aggregate

Coarse aggregate shall conform to ASTM C 33, Class 5S, size designation 57. Coarse aggregate shall have a maximum size of 1 inch, unless otherwise noted.

2.3 CHEMICAL ADMIXTURES

Chemical admixtures, when required or permitted, shall conform to the appropriate specification listed. Admixtures shall be furnished in liquid form and of suitable concentration for easy, accurate control of dispensing.

2.3.1 Air-Entraining Admixture

ASTM C 260 and shall consistently entrain the air content in the specified ranges under field conditions.

2.3.2 Accelerating Admixture

ASTM C 494/C 494M, Type C or E, except that calcium chloride or admixtures containing calcium chloride shall not be used.

2.3.3 Water-Reducing or Retarding Admixture

ASTM C 494/C 494M, Type A, B, or D, except that the 6-month and 1-year compressive and flexural strength tests are waived.

2.3.4 High-Range Water Reducer

ASTM C 494/C 494M, Type F or G, except that the 6-month and 1-year strength requirements are waived. The admixture shall be used only when approved in writing, such approval being contingent upon particular mixture control as described in the Contractor's Quality Control Plan and upon performance of separate mixture design studies.

2.3.5 Surface Retarder

COE CRD-C 94.

2.3.6 Expanding Admixture

Aluminum powder type expanding admixture conforming to ASTM C 937.

2.3.7 Other Chemical Admixtures

Chemical admixtures for use in producing flowing concrete shall comply with ASTM C 1017/C 1017M, Type I or II. These admixtures shall be used only when approved in writing, such approval being contingent upon particular mixture control as described in the Contractor's Quality Control Plan and upon performance of separate mixture design studies.

2.4 CURING MATERIALS

2.4.1 Impervious-Sheet

Impervious-sheet materials shall conform to ASTM C 171, type optional, except, that polyethylene sheet shall not be used.

2.4.2 Membrane-Forming Compound

Membrane-Forming curing compound shall conform to ASTM C 309, Type 1-D or 2, except that only a styrene acrylate or chlorinated rubber compound meeting Class B requirements shall be used for surfaces that are to be painted or are to receive bituminous roofing, or waterproofing, or floors that are to receive adhesive applications of resilient flooring. The curing compound selected shall be compatible with any subsequent paint, roofing, waterproofing, or flooring specified. Nonpigmented compound shall contain a fugitive dye, and shall have the reflective requirements in ASTM C 309 waived.

2.4.3 Burlap and Cotton Mat

Burlap and cotton mat used for curing shall conform to AASHTO M 182.

2.5 WATER

Water for mixing and curing shall be fresh, clean, potable, and free of injurious amounts of oil, acid, salt, or alkali, except that non-potable

water may be used if it meets the requirements of COE CRD-C 400.

2.6 NONSHRINK GROUT

Nonshrink grout shall conform to ASTM C 1107, Grade A or B or C, and shall be a commercial formulation suitable for the proposed application.

2.7 NONSLIP SURFACING MATERIAL

Nonslip surfacing material shall consist of 55 percent, minimum, aluminum oxide or silicon-dioxide abrasive ceramically bonded together to form a homogeneous material sufficiently porous to provide a good bond with portland cement paste; or factory-graded emery aggregate consisting of not less than 45 percent aluminum oxide and 25 percent ferric oxide. The aggregate shall be well graded from particles retained on the No. 30 sieve to particles passing the No. 8 sieve.

2.8 LATEX BONDING AGENT

Latex agents for bonding fresh to hardened concrete shall conform to ASTM C 1059.

2.9 EPOXY RESIN

Epoxy resins for use in repairs shall conform to ASTM C 881, Type V, Grade 2. Class as appropriate to the existing ambient and surface temperatures.

2.10 EMBEDDED ITEMS

Embedded items shall be of the size and type indicated or as needed for the application. Dovetail slots shall be galvanized steel. Inserts for shelf angles and bolt hangers shall be of malleable iron or cast or wrought steel.

2.11 FLOOR HARDENER

Floor hardener shall be a colorless aqueous solution containing zinc silicofluoride, magnesium silicofluoride, or sodium silicofluoride. These silicofluorides can be used individually or in combination. Proprietary hardeners may be used if approved in writing by the Contracting Officer.

2.12 VAPOR BARRIER

Vapor barrier shall be polyethylene sheeting with a minimum thickness of 6 mils or other equivalent material having a vapor permeance rating not exceeding 0.5 perms as determined in accordance with ASTM E 96.

2.13 JOINT MATERIALS

2.13.1 Joint Fillers, Sealers, and Waterstops

Expansion joint fillers shall be preformed materials conforming to ASTM D 1751. Materials for waterstops shall be in accordance with Section 03150 EXPANSION JOINTS, CONTRACTION JOINTS, AND WATERSTOPS.

2.13.2 Contraction Joints in Slabs

Sawable type contraction joint inserts shall conform to COE CRD-C 540. Nonsawable joint inserts shall have sufficient stiffness to permit placement in plastic concrete without undue deviation from a straight line

and shall conform to the physical requirements of COE CRD-C 540, with the exception of Section 3.4 "Resistance to Sawing". Plastic inserts shall be polyvinyl chloride conforming to the materials requirements of COE CRD-C 572.

2.14 SYNTHETIC FIBERS FOR REINFORCING

Synthetic fibers shall conform to ASTM C 1116, Type III, Synthetic Fiber, and as follows. Fibers shall be 100 percent virgin polypropylene fibrillated fibers containing no reprocessed olefin materials. Fibers shall have a specific gravity of 0.9, a minimum tensile strength of 70 ksi graded per manufacturer, and specifically manufactured to an optimum gradation for use as concrete secondary reinforcement.

2.15 DRY SHAKE FLOOR TOPPING MATERIAL

Dry shake floor topping material shall be a premixed ready-to-use dry shake. It shall be proportioned, mixed and packaged at the factory, and delivered to the jobsite in sealed, moisture resistant bags, ready to apply, finish and cure. The manufacturer of the dry shake material shall have at least 10 years experience in the manufacture of such material. Any material from a manufacturer who makes any disclaimer of the materials performance shall not be used.

PART 3 EXECUTION

3.1 PREPARATION FOR PLACING

Before commencing concrete placement, the following shall be performed. Surfaces to receive concrete shall be clean and free from frost, ice, mud, and water. Forms shall be in place, cleaned, coated, and adequately supported, in accordance with Section 03100 STRUCTURAL CONCRETE FORMWORK. Reinforcing steel shall be in place, cleaned, tied, and adequately supported, in accordance with Section 03200 CONCRETE REINFORCEMENT. Transporting and conveying equipment shall be in-place, ready for use, clean, and free of hardened concrete and foreign material. Equipment for consolidating concrete shall be at the placing site and in proper working order. Equipment and material for curing and for protecting concrete from weather or mechanical damage shall be at the placing site, in proper working condition and in sufficient amount for the entire placement. When hot, windy conditions during concreting appear probable, equipment and material shall be at the placing site to provide windbreaks, shading, fogging, or other action to prevent plastic shrinkage cracking or other damaging drying of the concrete.

3.1.1 Foundations

3.1.1.1 Concrete on Earth Foundations

Earth (subgrade, base, or subbase courses) surfaces upon which concrete is to be placed shall be clean, damp, and free from debris, frost, ice, and standing or running water. Prior to placement of concrete, the foundation shall be well drained and shall be satisfactorily graded and uniformly compacted.

3.1.1.2 Preparation of Rock

Rock surfaces upon which concrete is to be placed shall be free from oil, standing or running water, ice, mud, drummy rock, coating, debris, and loose, semidetached or unsound fragments. Joints in rock shall be cleaned

to a satisfactory depth, as determined by the Contracting Officer, and to firm rock on the sides. Immediately before the concrete is placed, rock surfaces shall be cleaned thoroughly by the use of air-water jets or sandblasting as specified below for Previously Placed Concrete. Rock surfaces shall be kept continuously moist for at least 24 hours immediately prior to placing concrete thereon. All horizontal and approximately horizontal surfaces shall be covered, immediately before the concrete is placed, with a layer of mortar proportioned similar to that in the concrete mixture. Concrete shall be placed before the mortar stiffens.

3.1.1.3 Excavated Surfaces in Lieu of Forms

Concrete for footings may be placed directly against the soil provided the earth or rock has been carefully trimmed, is uniform and stable, and meets the compaction requirements of Section 02315 EXCAVATION, FILLING, AND BACKFILLING FOR BUILDINGS. The concrete shall be placed without becoming contaminated by loose material, and the outline of the concrete shall be within the specified tolerances.

3.1.2 Previously Placed Concrete

Concrete surfaces to which additional concrete is to be bonded shall be prepared for receiving the next horizontal lift by cleaning the construction joint surface with either air-water cutting, sandblasting, high-pressure water jet, or other approved method. Concrete at the side of vertical construction joints shall be prepared as approved by the Contracting Officer. Air-water cutting shall not be used on formed surfaces or surfaces congested with reinforcing steel. Regardless of the method used, the resulting surfaces shall be free from all laitance and inferior concrete so that clean surfaces of well bonded coarse aggregate are exposed and make up at least 10-percent of the surface area, distributed uniformly throughout the surface. The edges of the coarse aggregate shall not be undercut. The surface of horizontal construction joints shall be kept continuously wet for the first 12 hours during the 24-hour period prior to placing fresh concrete. The surface shall be washed completely clean as the last operation prior to placing the next lift. For heavy duty floors and two-course floors a thin coat of neat cement grout of about the consistency of thick cream shall be thoroughly scrubbed into the existing surface immediately ahead of the topping placing. The grout shall be a 1:1 mixture of portland cement and sand passing the No. 8 sieve. The topping concrete shall be deposited before the grout coat has had time to stiffen.

3.1.2.1 Air-Water Cutting

Air-water cutting of a fresh concrete surface shall be performed at the proper time and only on horizontal construction joints. The air pressure used in the jet shall be 100 psi plus or minus, 10 psi, and the water pressure shall be just sufficient to bring the water into effective influence of the air pressure. When approved by the Contracting Officer, a surface retarder complying with the requirements of COE CRD-C 94 may be applied to the surface of the lift in order to prolong the period of time during which air-water cutting is effective. After cutting, the surface shall be washed and rinsed as long as there is any trace of cloudiness of the wash water. Where necessary to remove accumulated laitance, coatings, stains, debris, and other foreign material, high-pressure waterjet or sandblasting shall be used as the last operation before placing the next lift.

3.1.2.2 High-Pressure Water Jet

A stream of water under a pressure of not less than 3,000 psi shall be used for cutting and cleaning. Its use shall be delayed until the concrete is sufficiently hard so that only the surface skin or mortar is removed and there is no undercutting of coarse-aggregate particles. If the waterjet is incapable of a satisfactory cleaning, the surface shall be cleaned by sandblasting.

3.1.2.3 Wet Sandblasting

Wet sandblasting shall be used after the concrete has reached sufficient strength to prevent undercutting of the coarse aggregate particles. After wet sandblasting, the surface of the concrete shall then be washed thoroughly to remove all loose materials.

3.1.2.4 Waste Disposal

The method used in disposing of waste water employed in cutting, washing, and rinsing of concrete surfaces shall be such that the waste water does not stain, discolor, or affect exposed surfaces of the structures, or damage the environment of the project area. The method of disposal shall be subject to approval.

3.1.2.5 Preparation of Previously Placed Concrete

Concrete surfaces to which other concrete is to be bonded shall be abraded in an approved manner that will expose sound aggregate uniformly without damaging the concrete. Laitance and loose particles shall be removed. Surfaces shall be thoroughly washed and shall be moist but without free water when concrete is placed.

3.1.3 Vapor Barrier

Vapor barrier shall be provided beneath the interior on-grade concrete floor slabs. The greatest widths and lengths practicable shall be used to eliminate joints wherever possible. Joints shall be lapped a minimum of 12 inches. Torn, punctured, or damaged vapor barrier material shall be removed and new vapor barrier shall be provided prior to placing concrete. For minor repairs, patches may be made using laps of at least 12 inches. Lapped joints shall be sealed and edges patched with pressure-sensitive adhesive or tape not less than 2 inches wide and compatible with the membrane. Vapor barrier shall be placed directly on underlying subgrade, base course, or capillary water barrier, unless it consists of crushed material or large granular material which could puncture the vapor barrier. In this case, the surface shall be choked with a light layer of sand, as approved, before placing the vapor barrier. A 2 inch layer of compacted, clean concrete sand (fine aggregate) shall be placed on top of the vapor barrier before placing concrete. Concrete placement shall be controlled so as to prevent damage to the vapor barrier, or any covering sand.

3.1.4 Embedded Items

Before placement of concrete, care shall be taken to determine that all embedded items are firmly and securely fastened in place as indicated on the drawings, or required. Conduit and other embedded items shall be clean and free of oil and other foreign matter such as loose coatings or rust, paint, and scale. The embedding of wood in concrete will be permitted only when specifically authorized or directed. Voids in sleeves, inserts, and

anchor slots shall be filled temporarily with readily removable materials to prevent the entry of concrete into voids. Welding shall not be performed on embedded metals within 1 feet of the surface of the concrete. Tack welding shall not be performed on or to embedded items.

3.2 CONCRETE PRODUCTION

3.2.1 Batching, Mixing, and Transporting Concrete

Concrete shall be furnished from a ready-mixed concrete plant. Ready-mixed concrete shall be batched, mixed, and transported in accordance with ASTM C 94/C 94M, except as otherwise specified. Truck mixers, agitators, and nonagitating transporting units shall comply with NRMCA TMMB 100. Ready-mix plant equipment and facilities shall be certified in accordance with NRMCA QC 3. Approved batch tickets shall be furnished for each load of ready-mixed concrete. Site-mixed concrete will not be permitted.

3.3 FIBER REINFORCED CONCRETE

Fiber reinforced concrete shall conform to ASTM C 1116 and as follows, using the fibers specified in PART 2. A minimum of 1.5 pounds of fibers per cubic yard of concrete shall be used. Fibers shall be added at the batch plant. Toughness indices shall meet requirements for performance level I of ASTM C 1116. The services of a qualified technical representative shall be provided to instruct the concrete supplier in proper batching and mixing of materials to be provided.

3.4 TRANSPORTING CONCRETE TO PROJECT SITE

Concrete shall be transported to the placing site in truck mixers,.

3.5 CONVEYING CONCRETE ON SITE

Concrete shall be conveyed from mixer or transporting unit to forms as rapidly as possible and within the time interval specified by methods which will prevent segregation or loss of ingredients using following equipment. Conveying equipment shall be cleaned before each placement.

3.5.1 Buckets

The interior hopper slope shall be not less than 58 degrees from the horizontal, the minimum dimension of the clear gate opening shall be at least 5 times the nominal maximum-size aggregate, and the area of the gate opening shall not be less than 2 square feet. The maximum dimension of the gate opening shall not be greater than twice the minimum dimension. The bucket gates shall be essentially grout tight when closed and may be manually, pneumatically, or hydraulically operated except that buckets larger than 2 cubic yardsshall not be manually operated. The design of the bucket shall provide means for positive regulation of the amount and rate of deposit of concrete in each dumping position.

3.5.2 Transfer Hoppers

Concrete may be charged into nonagitating hoppers for transfer to other conveying devices. Transfer hoppers shall be capable of receiving concrete directly from delivery vehicles and shall have conical-shaped discharge features. The transfer hopper shall be equipped with a hydraulically operated gate and with a means of external vibration to effect complete discharge. Concrete shall not be held in nonagitating transfer hoppers

more than 30 minutes.

3.5.3 Trucks

Truck mixers operating at agitating speed or truck agitators used for transporting plant-mixed concrete shall conform to the requirements of ASTM C 94/C 94M. Nonagitating equipment shall be used only for transporting plant-mixed concrete over a smooth road and when the hauling time is less than 15 minutes. Bodies of nonagitating equipment shall be smooth, watertight, metal containers specifically designed to transport concrete, shaped with rounded corners to minimize segregation, and equipped with gates that will permit positive control of the discharge of the concrete.

3.5.4 Chutes

When concrete can be placed directly from a truck mixer, agitator, or nonagitating equipment, the chutes normally attached to this equipment by the manufacturer may be used. A discharge deflector shall be used when required by the Contracting Officer. Separate chutes and other similar equipment will not be permitted for conveying concrete.

3.5.5 Belt Conveyors

Belt conveyors shall be designed and operated to assure a uniform flow of concrete from mixer to final place of deposit without segregation of ingredients or loss of mortar and shall be provided with positive means, such as discharge baffle or hopper , for preventing segregation of the concrete at the transfer points and the point of placing. Belt conveyors shall be constructed such that the idler spacing shall not exceed 36 inches. The belt speed shall be a minimum of 300 feet per minute and a maximum of 750 feet per minute. If concrete is to be placed through installed horizontal or sloping reinforcing bars, the conveyor shall discharge concrete into a pipe or elephant truck that is long enough to extend through the reinforcing bars.

3.5.6 Concrete Pumps

Concrete may be conveyed by positive displacement pump when approved. The pumping equipment shall be piston or squeeze pressure type; pneumatic placing equipment shall not be used. The pipeline shall be rigid steel pipe or heavy-duty flexible hose. The inside diameter of the pipe shall be at least 3 times the nominal maximum-size coarse aggregate in the concrete mixture to be pumped but not less than 4 inches. Aluminum pipe shall not be used.

3.6 PLACING CONCRETE

Mixed concrete shall be discharged within 1-1/2 hours or before the mixer drum has revolved 300 revolutions, whichever comes first after the introduction of the mixing water to the cement and aggregates. When the concrete temperature exceeds 85 degrees F, the time shall be reduced to 45 minutes. Concrete shall be placed within 15 minutes after it has been discharged from the transporting unit. Concrete shall be handled from mixer or transporting unit to forms in a continuous manner until the approved unit of operation is completed. Adequate scaffolding, ramps and walkways shall be provided so that personnel and equipment are not supported by in-place reinforcement. Placing will not be permitted when the sun, heat, wind, or limitations of facilities furnished by the Contractor prevent proper consolidation, finishing and curing. Sufficient

placing capacity shall be provided so that concrete can be kept free of cold joints.

3.6.1 Depositing Concrete

Concrete shall be deposited as close as possible to its final position in the forms, and there shall be no vertical drop greater than 5 feet except where suitable equipment is provided to prevent segregation and where specifically authorized. Depositing of the concrete shall be so regulated that it will be effectively consolidated in horizontal layers not more than 12 inches thick, except that all slabs shall be placed in a single layer. Concrete to receive other construction shall be screeded to the proper level. Concrete shall be deposited continuously in one layer or in layers so that fresh concrete is deposited on in-place concrete that is still plastic. Fresh concrete shall not be deposited on concrete that has hardened sufficiently to cause formation of seams or planes of weakness within the section. Concrete that has surface dried, partially hardened, or contains foreign material shall not be used. When temporary spreaders are used in the forms, the spreaders shall be removed as their service becomes unnecessary. Concrete shall not be placed in slabs over columns and walls until concrete in columns and walls has been in-place at least two hours or until the concrete begins to lose its plasticity. Concrete for beams, girders, brackets, column capitals, haunches, and drop panels shall be placed at the same time as concrete for adjoining slabs.

3.6.2 Consolidation

Immediately after placing, each layer of concrete shall be consolidated by internal vibrators, except for slabs 4 inches thick or less. The vibrators shall at all times be adequate in effectiveness and number to properly consolidate the concrete; a spare vibrator shall be kept at the jobsite during all concrete placing operations. The vibrators shall have a frequency of not less than 10,000 vibrations per minute, an amplitude of at least 0.025 inch, and the head diameter shall be appropriate for the structural member and the concrete mixture being placed. Vibrators shall be inserted vertically at uniform spacing over the area of placement. The distance between insertions shall be approximately 1-1/2 times the radius of action of the vibrator so that the area being vibrated will overlap the adjacent just-vibrated area by a reasonable amount. The vibrator shall penetrate rapidly to the bottom of the layer and at least 6 inches into the preceding layer if there is such. Vibrator shall be held stationary until the concrete is consolidated and then vertically withdrawn slowly while operating. Form vibrators shall not be used unless specifically approved and unless forms are constructed to withstand their use. Vibrators shall not be used to move concrete within the forms. Slabs 4 inches and less in thickness shall be consolidated by properly designed vibrating screeds or other approved technique. Excessive vibration of lightweight concrete resulting in serration or flotation of coarse aggregate shall be prevented. Frequency and amplitude of vibrators shall be determined in accordance with COE CRD-C 521. Grate tampers ("jitterbugs") shall not be used.

3.6.3 Cold Weather Requirements

Special protection measures, approved by the Contracting Officer, shall be used if freezing temperatures are anticipated before the expiration of the specified curing period. The ambient temperature of the air where concrete is to be placed and the temperature of surfaces to receive concrete shall be not less than 40 degrees F. The temperature of the concrete when placed shall be not less than 50 degrees F nor more than 75 degrees F. Heating of

the mixing water or aggregates will be required to regulate the concrete placing temperature. Materials entering the mixer shall be free from ice, snow, or frozen lumps. Salt, chemicals or other materials shall not be incorporated in the concrete to prevent freezing. Upon written approval, an accelerating admixture conforming to ASTM C 494/C 494M, Type C or E may be used, provided it contains no calcium chloride. Calcium chloride shall not be used.

3.6.4 Hot Weather Requirements

When the ambient temperature during concrete placing is expected to exceed 85 degrees F, the concrete shall be placed and finished with procedures previously submitted and as specified herein. The concrete temperature at time of delivery to the forms shall not exceed the temperature shown in the table below when measured in accordance with ASTM C 1064/C 1064M. Cooling of the mixing water or aggregates or placing concrete in the cooler part of the day may be required to obtain an adequate placing temperature. A retarder may be used, as approved, to facilitate placing and finishing. Steel forms and reinforcements shall be cooled as approved prior to concrete placement when steel temperatures are greater than 120 degrees F. Conveying and placing equipment shall be cooled if necessary to maintain proper concrete-placing temperature.

Maximum Allowable Concrete Placing Temperature

Relative Humidity, Percent, During Time of Concrete Placement	Maximum Allowable Concrete Temperature Degrees
Greater than 60	90 F
40-60	85 F
Less than 40	80 F

3.6.5 Prevention of Plastic Shrinkage Cracking

During hot weather with low humidity, and particularly with appreciable wind, as well as interior placements when space heaters produce low humidity, the Contractor shall be alert to the tendency for plastic shrinkage cracks to develop and shall institute measures to prevent this. Particular care shall be taken if plastic shrinkage cracking is potentially imminent and especially if it has developed during a previous placement. Periods of high potential for plastic shrinkage cracking can be anticipated by use of Fig. 2.1.5 of ACI 305R. In addition the concrete placement shall be further protected by erecting shades and windbreaks and by applying fog sprays of water, sprinkling, ponding or wet covering. Plastic shrinkage cracks that occur shall be filled by injection of epoxy resin as directed, after the concrete hardens. Plastic shrinkage cracks shall never be troweled over or filled with slurry.

3.6.6 Placing Concrete Underwater

Concrete shall be deposited in water by a tremie or concrete pump. The methods and equipment used shall be subject to approval. Concrete buckets shall not be used for underwater placement of concrete except to deliver concrete to the tremie. The tremie shall be watertight and sufficiently large to permit a free flow of concrete. The concrete shall be deposited so that it enters the mass of the previously placed concrete from within,

displacing water with a minimum disturbance to the surface of the concrete. The discharge end of the pump line or tremie shaft shall be kept continuously submerged in the concrete. The underwater seal at start of placing shall not produce undue turbulence in the water. The tremie shaft shall be kept full of concrete to a point well above the water surface. Placement shall proceed without interruption until the concrete has been brought to the required height. The tremie shall not be moved horizontally during a placing operation, and a sufficient number of tremies shall be provided so that the maximum horizontal flow of concrete will be limited to 15 feet. Concrete shall not be deposited in running water or in water with a temperature below 35 degrees F.

3.6.7 Placing Concrete in Congested Areas

Special care shall be used to ensure complete filling of the forms, elimination of all voids, and complete consolidation of the concrete when placing concrete in areas congested with reinforcing bars, embedded items, waterstops and other tight spacing. An appropriate concrete mixture shall be used, and the nominal maximum size of aggregate (NMSA) shall meet the specified criteria when evaluated for the congested area. Vibrators with heads of a size appropriate for the clearances available shall be used, and the consolidation operation shall be closely supervised to ensure complete and thorough consolidation at all points. Where necessary, splices of reinforcing bars shall be alternated to reduce congestion. Where two mats of closely spaced reinforcing are required, the bars in each mat shall be placed in matching alignment to reduce congestion. Reinforcing bars may be temporarily crowded to one side during concrete placement provided they are returned to exact required location before concrete placement and consolidation are completed.

3.6.8 Placing Flowable Concrete

If a plasticizing admixture conforming to ASTM C 1017/C 1017M is used or if a Type F or G high range water reducing admixture is permitted to increase the slump, the concrete shall meet all requirements of paragraph GENERAL REQUIREMENTS in PART 1. Extreme care shall be used in conveying and placing the concrete to avoid segregation. Consolidation and finishing shall meet all requirements of paragraphs Placing Concrete, Finishing Formed Surfaces, and Finishing Unformed Surfaces. No relaxation of requirements to accommodate flowable concrete will be permitted.

3.7 JOINTS

Joints shall be located and constructed as indicated or approved. Joints not indicated on the drawings shall be located and constructed to minimize the impact on the strength of the structure. In general, such joints shall be located near the middle of the spans of supported slabs, beams, and girders unless a beam intersects a girder at this point, in which case the joint in the girder shall be offset a distance equal to twice the width of the beam. Joints in walls and columns shall be at the underside of floors, slabs, beams, or girders and at the tops of footings or floor slabs, unless otherwise approved. Joints shall be perpendicular to the main reinforcement. All reinforcement shall be continued across joints; except that reinforcement or other fixed metal items shall not be continuous through expansion joints, or through construction or contraction joints in slabs on grade. Reinforcement shall be 2 inches clear from each joint. Except where otherwise indicated, construction joints between interior slabs on grade and vertical surfaces shall consist of 30 pound asphalt-saturated felt, extending for the full depth of the slab. The

perimeters of the slabs shall be free of fins, rough edges, spalling, or other unsightly appearance. Reservoir for sealant for construction and contraction joints in slabs shall be formed to the dimensions shown on the drawings by removing snap-out joint-forming inserts, by sawing sawable inserts, or by sawing to widen the top portion of sawed joints. Joints to be sealed shall be cleaned and sealed as indicated and in accordance with Section 07900 JOINT SEALING.

3.7.1 Construction Joints

For concrete other than slabs on grade, construction joints shall be located so that the unit of operation does not exceed 50 feet. Concrete shall be placed continuously so that each unit is monolithic in construction. Fresh concrete shall not be placed against adjacent hardened concrete until it is at least 24 hours old. Construction joints shall be located as indicated or approved. Where concrete work is interrupted by weather, end of work shift or other similar type of delay, location and type of construction joint shall be subject to approval of the Contracting Officer. Unless otherwise indicated and except for slabs on grade, reinforcing steel shall extend through construction joints. Construction joints in slabs on grade shall be keyed or doweled as shown. Concrete columns, walls, or piers shall be in place at least 2 hours, or until the concrete begins to lose its plasticity, before placing concrete for beams, girders, or slabs thereon. In walls having door or window openings, lifts shall terminate at the top and bottom of the opening. Other lifts shall terminate at such levels as to conform to structural requirements or architectural details. Where horizontal construction joints in walls or columns are required, a strip of 1 inchsquare-edge lumber, bevelled and oiled to facilitate removal, shall be tacked to the inside of the forms at the construction joint. Concrete shall be placed to a point 1 inch above the underside of the strip. The strip shall be removed 1 hour after the concrete has been placed, and any irregularities in the joint line shall be leveled off with a wood float, and all laitance shall be removed. Prior to placing additional concrete, horizontal construction joints shall be prepared as specified in paragraph Previously Placed Concrete.

3.7.2 Contraction Joints in Slabs on Grade

Contraction joints shall be located and detailed as shown on the drawings. Contraction Joints shall be produced by forming a weakened plane in the concrete slab by use of rigid inserts impressed in the concrete during placing operations or sawing a continuous slot with a concrete saw. Regardless of method used to produce the weakened plane, it shall be 1/4 the depth of the slab thickness and between 1/8 and 3/16 inch wide. For saw-cut joints, cutting shall be timed properly with the set of the concrete. Cutting shall be started as soon as the concrete has hardened sufficiently to prevent ravelling of the edges of the saw cut. Cutting shall be completed before shrinkage stresses become sufficient to produce cracking. Reservoir for joint sealant shall be formed as previously specified.

3.7.3 Expansion Joints

Installation of expansion joints and sealing of these joints shall conform to the requirements of Section 03150 EXPANSION JOINTS, CONTRACTION JOINTS, AND WATERSTOPS.

3.7.4 Waterstops

Waterstops shall be installed in conformance with the locations and details shown on the drawings using materials and procedures specified in Section 03150 EXPANSION JOINTS, CONTRACTION JOINTS, AND WATERSTOPS.

3.7.5 Dowels and Tie Bars

Dowels and tie bars shall be installed at the locations shown on the drawings and to the details shown, using materials and procedures specified in Section 03200 CONCRETE REINFORCEMENT and herein. Conventional smooth "paving" dowels shall be installed in slabs using approved methods to hold the dowel in place during concreting within a maximum alignment tolerance of 1/8 inch in 12 inches. "Structural" type deformed bar dowels, or tie bars, shall be installed to meet the specified tolerances. Care shall be taken during placing adjacent to and around dowels and tie bars to ensure there is no displacement of the dowel or tie bar and that the concrete completely embeds the dowel or tie bar and is thoroughly consolidated.

3.8 FINISHING FORMED SURFACES

Forms, form materials, and form construction are specified in Section 03100 STRUCTURAL CONCRETE FORMWORK. Finishing of formed surfaces shall be as specified herein. Unless another type of architectural or special finish is specified, surfaces shall be left with the texture imparted by the forms except that defective surfaces shall be repaired. Unless painting of surfaces is required, uniform color of the concrete shall be maintained by use of only one mixture without changes in materials or proportions for any structure or portion of structure that requires a Class A or B finish. Except for major defects, as defined hereinafter, surface defects shall be repaired as specified herein within 24 hours after forms are removed. Repairs of the so-called "plaster-type" will not be permitted in any location. Tolerances of formed surfaces shall conform to the requirements of ACI 117/117R. These tolerances apply to the finished concrete surface, not to the forms themselves; forms shall be set true to line and grade. Form tie holes requiring repair and other defects whose depth is at least as great as their surface diameter shall be repaired as specified in paragraph Damp-Pack Mortar Repair. Defects whose surface diameter is greater than their depth shall be repaired as specified in paragraph Repair of Major Defects. Repairs shall be finished flush with adjacent surfaces and with the same surface texture. The cement used for all repairs shall be a blend of job cement with white cement proportioned so that the final color after curing and aging will be the same as the adjacent concrete. Concrete with excessive honeycomb, or other defects which affect the strength of the member, will be rejected. Repairs shall be demonstrated to be acceptable and free from cracks or loose or drummy areas at the completion of the contract and, for Class A and B Finishes, shall be inconspicuous. Repairs not meeting these requirements will be rejected and shall be replaced.

3.8.1 Class B Finish

Class B finish is required for all concrete with exterior surfaces exposed to view. Fins, ravelings, and loose material shall be removed, all surface defects over 1/2 inch in diameter or more than 1/2 inch deep, shall be repaired and, except as otherwise indicated or as specified in Section 03100 STRUCTURAL CONCRETE FORMWORK, holes left by removal of form ties shall be reamed and filled. Defects more than 1/2 inch in diameter shall be cut back to sound concrete, but in all cases at least 1 inch deep. The Contractor shall prepare a sample panel for approval (as specified in PART 1) before commencing repair, showing that the surface texture and color

match will be attained. Metal tools shall not be used to finish repairs in Class A surfaces.

3.8.2 Class C Finish

Class C finish is required for all concrete with interior surfaces. Fins, ravelings, and loose material shall be removed, and, except as otherwise indicated or as specified in Section 03100 STRUCTURAL CONCRETE FORMWORK, holes left by removal of form ties shall be reamed and filled. Honeycomb and other defects more than 1/2 inch deep or more than 2 inches in diameter shall be repaired. Defects more than 2 inches in diameter shall be cut back to sound concrete, but in all cases at least 1 inch deep.

3.9 REPAIRS

3.9.1 Damp-Pack Mortar Repair

Form tie holes requiring repair and other defects whose depth is at least as great as their surface diameter but not over 4 inchesshall be repaired by the damp-pack mortar method. Form tie holes shall be reamed and other similar defects shall be cut out to sound concrete. The void shall then be thoroughly cleaned, thoroughly wetted, brush-coated with a thin coat of neat cement grout and filled with mortar. Mortar shall be a stiff mix of 1 part portland cement to 2 parts fine aggregate passing the No. 16 mesh sieve, and minimum amount of water. Only sufficient water shall be used to produce a mortar which, when used, will stick together on being molded into a ball by a slight pressure of the hands and will not exude water but will leave the hands damp. Mortar shall be mixed and allowed to stand for 30 to 45 minutes before use with remixing performed immediately prior to use. Mortar shall be thoroughly tamped in place in thin layers using a hammer and hardwood block. Holes passing entirely through walls shall be completely filled from the inside face by forcing mortar through to the outside face. All holes shall be packed full. Damp-pack repairs shall be moist cured for at least 48 hours.

3.9.2 Repair of Major Defects

Major defects will be considered to be those more than 1/2 inch deep or, for Class A and B finishes, more than 1/2 inch in diameter and, for Class C and D finishes, more than 2 inches in diameter. Also included are any defects of any kind whose depth is over 4 inches or whose surface diameter is greater than their depth. Major defects shall be repaired as specified below.

3.9.2.1 Surface Application of Mortar Repair

Defective concrete shall be removed, and removal shall extend into completely sound concrete. Approved equipment and procedures which will not cause cracking or microcracking of the sound concrete shall be used. If reinforcement is encountered, concrete shall be removed so as to expose the reinforcement for at least 2 inches on all sides. All such defective areas greater than 12 square inchesshall be outlined by saw cuts at least 1 inch deep. Defective areas less than 12 square inches shall be outlined by a 1 inch deep cut with a core drill in lieu of sawing. All saw cuts shall be straight lines in a rectangular pattern in line with the formwork panels. After concrete removal, the surface shall be thoroughly cleaned by high pressure washing to remove all loose material. Surfaces shall be kept continually saturated for the first 12 of the 24 hours immediately before placing mortar and shall be damp but not wet at the time of commencing

mortar placement. The Contractor, at his option, may use either hand-placed mortar or mortar placed with a mortar gun. If hand-placed mortar is used, the edges of the cut shall be perpendicular to the surface of the concrete. The prepared area shall be brush-coated with a thin coat of neat cement grout. The repair shall then be made using a stiff mortar, preshrunk by allowing the mixed mortar to stand for 30 to 45 minutes and then remixed, thoroughly tamped into place in thin layers. If hand-placed mortar is used, the Contractor shall test each repair area for drumminess by firm tapping with a hammer and shall inspect for cracks, both in the presence of the Contracting Officer's representative, immediately before completion of the contract, and shall replace any showing drumminess or cracking. If mortar placed with a mortar gun is used, the gun shall be a small compressed air-operated gun to which the mortar is slowly hand fed and which applies the mortar to the surface as a high-pressure stream, as approved. Repairs made using shotcrete equipment will not be accepted. The mortar used shall be the same mortar as specified for damp-pack mortar repair. If gun-placed mortar is used, the edges of the cut shall be beveled toward the center at a slope of 1:1. All surface applied mortar repairs shall be continuously moist cured for at least 7 days. Moist curing shall consist of several layers of saturated burlap applied to the surface immediately after placement is complete and covered with polyethylene sheeting, all held closely in place by a sheet of plywood or similar material rigidly braced against it. Burlap shall be kept continually wet.

3.9.2.2 Repair of Deep and Large Defects

Deep and large defects will be those that are more than 6 inches deep and also have an average diameter at the surface more than 18 inches or that are otherwise so identified by the Project Office. Such defects shall be repaired as specified herein or directed, except that defects which affect the strength of the structure shall not be repaired and that portion of the structure shall be completely removed and replaced. Deep and large defects shall be repaired by procedures approved in advance including forming and placing special concrete using applied pressure during hardening. Preparation of the repair area shall be as specified for surface application of mortar. In addition, the top edge (surface) of the repair area shall be sloped at approximately 20 degrees from the horizontal, upward toward the side from which concrete will be placed. The special concrete shall be a concrete mixture with low water content and low slump, and shall be allowed to age 30 to 60 minutes before use. Concrete containing a specified expanding admixture may be used in lieu of the above mixture; the paste portion of such concrete mixture shall be designed to have an expansion between 2.0 and 4.0 percent when tested in accordance with ASTM C 940. A full width "chimney" shall be provided at the top of the form on the placing side to ensure filling to the top of the opening. A pressure cap shall be used on the concrete in the chimney with simultaneous tightening and revibrating the form during hardening to ensure a tight fit for the repair. The form shall be removed after 24 hours and immediately the chimney shall be carefully chipped away to avoid breaking concrete out of the repair; the surface of the repair concrete shall be dressed as required.

3.9.3 Resinous and Latex Material Repair

In lieu of the portland cement bonding coats specified above, an epoxy resin or a latex bonding agent may be used.

3.10 FLOOR HARDENER

Base slab and pump house floor slab shall be treated with floor hardener. Floor hardener shall be applied after the concrete has been cured and then air dried for 28 days. Three coats shall be applied, each the day after the preceding coat was applied. For the first application, one pound of the silocofluoride shall be dissolved in one gallon of water. For subsequent applications, the solution shall be two pounds of silicofluoride to each gallon of water. Floor should be mopped with clear water shortly after the preceding application has dried to remove encrusted salts. Proprietary hardeners shall be applied in accordance with the manufacturer's instructions. During application, area should be well ventilated. Precautions shall be taken when applying silicofluorides due to the toxicity of the salts. Any compound that contacts glass or aluminum should be immediately removed with clear water.

3.11 EXTERIOR SLAB AND RELATED ITEMS

3.11.1 Pavements

Pavements shall be constructed where shown on the drawings. After forms are set and underlying material prepared as specified, the concrete shall be placed uniformly throughout the area and thoroughly vibrated. As soon as placed and vibrated, the concrete shall be struck off and screeded to the crown and cross section and to such elevation above grade that when consolidated and finished, the surface of the pavement will be at the required elevation. The entire surface shall be tamped with the strike off, or consolidated with a vibrating screed, and this operation continued until the required compaction and reduction of internal and surface voids are accomplished. Care shall be taken to prevent bringing excess paste to the surface. Immediately following the final consolidation of the surface, the pavement shall be floated longitudinally from bridges resting on the side forms and spanning but not touching the concrete. If necessary, additional concrete shall be placed and screeded, and the float operated until a satisfactory surface has been produced. The floating operation shall be advanced not more than half the length of the float and then continued over the new and previously floated surfaces. After finishing is completed but while the concrete is still plastic, minor irregularities and score marks in the pavement surface shall be eliminated by means of long-handled cutting straightedges. Straightedges shall be 12 feet in length and shall be operated from the sides of the pavement and from bridges. A straightedge operated from the side of the pavement shall be equipped with a handle 3 feet longer than one-half the width of the pavement. The surface shall then be tested for trueness with a 12 foot straightedge held in successive positions parallel and at right angles to the center line of the pavement, and the whole area covered as necessary to detect variations. The straightedge shall be advanced along the pavement in successive stages of not more than one-half the length of the straightedge. Depressions shall be immediately filled with freshly mixed concrete, struck off, consolidated, and refinished. Projections above the required elevation shall also be struck off and refinished. The straightedge testing and finishing shall continue until the entire surface of the concrete is true. Before the surface sheen has disappeared and well before the concrete becomes nonplastic, the surface of the pavement shall be given a nonslip sandy surface texture by belting with approved "belt" and procedures or use of a burlap drag. A strip of clean, wet burlap from 3 to 5 feet wide and 2 feet longer than the pavement width shall be carefully pulled across the surface. Edges and joints shall be rounded with an edger having a radius of 1/8 inch. Curing shall be as specified.

3.11.2 Sidewalks

Concrete shall be 4 inches minimum thickness. Contraction joints shall be provided at 5 feet spaces unless otherwise indicated. Contraction joints shall be cut 1 inch deep with a jointing tool after the surface has been finished. Transverse expansion joints 1/2 inch thick shall be provided at changes in direction and where sidewalk abuts curbs, steps, rigid pavement, or other similar structures. Sidewalks shall be given a lightly broomed finish. A transverse slope of 1/4 inch per foot shall be provided, unless otherwise indicated. Variations in cross section shall be limited to 1/4 inch in 5 feet.

3.11.3 Curbs and Gutters

Concrete shall be formed, placed, and finished by hand using a properly shaped "mule" or constructed using a slipform machine specially designed for this work. Contraction joints shall be cut 3 inches deep with a jointing tool after the surface has been finished. Expansion joints (1/2 inch wide) shall be provided at 100 feetmaximum spacing unless otherwise indicated. Exposed surfaces shall be finished using a stiff bristled brush.

3.11.4 Pits and Trenches

Pits and trenches shall be constructed as indicated on the drawings. Bottoms and walls shall be placed monolithically or waterstops and keys, shall be provided as approved.

3.12 CURING AND PROTECTION

3.12.1 General

Concrete shall be cured by an approved method for the period of time given below:

Concrete with Type III cement	3 days
All other concrete	7 days

Immediately after placement, concrete shall be protected from premature drying, extremes in temperatures, rapid temperature change, mechanical injury and damage from rain and flowing water for the duration of the curing period. Air and forms in contact with concrete shall be maintained at a temperature above 50 degrees F for the first 3 days and at a temperature above 32 degrees F for the remainder of the specified curing period. Exhaust fumes from combustion heating units shall be vented to the outside of the enclosure, and heaters and ducts shall be placed and directed so as not to cause areas of overheating and drying of concrete surfaces or to create fire hazards. Materials and equipment needed for adequate curing and protection shall be available and at the site prior to placing concrete. No fire or excessive heat, including welding, shall be permitted near or in direct contact with the concrete at any time. Except as otherwise permitted by paragraph Membrane Forming Curing Compounds, moist curing shall be provided for any areas to receive floor hardener, any paint or other applied coating, or to which other concrete is to be bonded. Concrete containing silica fume shall be initially cured by fog misting during finishing, followed immediately by continuous moist curing. Except for plastic coated burlap, impervious sheeting alone shall not be used for curing.

3.12.2 Moist Curing

Concrete to be moist-cured shall be maintained continuously wet for the entire curing period, commencing immediately after finishing. If water or curing materials used stain or discolor concrete surfaces which are to be permanently exposed, the concrete surfaces shall be cleaned as approved. When wooden forms are left in place during curing, they shall be kept wet at all times. If steel forms are used in hot weather, nonsupporting vertical forms shall be broken loose from the concrete soon after the concrete hardens and curing water continually applied in this void. If the forms are removed before the end of the curing period, curing shall be carried out as on unformed surfaces, using suitable materials. Surfaces shall be cured by ponding, by continuous sprinkling, by continuously saturated burlap or cotton mats, or by continuously saturated plastic coated burlap. Burlap and mats shall be clean and free from any contamination and shall be completely saturated before being placed on the concrete. The Contractor shall have an approved work system to ensure that moist curing is continuous 24 hours per day.

3.12.3 Membrane Forming Curing Compounds

Membrane forming curing compounds shall be used only on surfaces as approved by the Contracting Officer. Membrane curing shall not be used on surfaces that are to receive any subsequent treatment depending on adhesion or bonding to the concrete, including surfaces to which a smooth finish is to be applied or other concrete to be bonded. However, a styrene acrylate or chlorinated rubber compound meeting ASTM C 309, Class B requirements, may be used for surfaces which are to be painted or are to receive bituminous roofing or waterproofing, or floors that are to receive adhesive applications of resilient flooring. The curing compound selected shall be compatible with any subsequent paint, roofing, waterproofing or flooring specified. Membrane curing compound shall not be used on surfaces that are maintained at curing temperatures with free steam. Curing compound shall be applied to formed surfaces immediately after the forms are removed and prior to any patching or other surface treatment except the cleaning of loose sand, mortar, and debris from the surface. All surfaces shall be thoroughly moistened with water. Curing compound shall be applied to slab surfaces as soon as the bleeding water has disappeared, with the tops of joints being temporarily sealed to prevent entry of the compound and to prevent moisture loss during the curing period. The curing compound shall be applied in a two-coat continuous operation by approved motorized power-spraying equipment operating at a minimum pressure of 75 psi, at a uniform coverage of not more than 400 square feet per gallon for each coat, and the second coat shall be applied perpendicular to the first coat. Concrete surfaces which have been subjected to rainfall within 3 hours after curing compound has been applied shall be resprayed by the method and at the coverage specified. Surfaces on which clear compound is used shall be shaded from direct rays of the sun for the first 3 days. Surfaces coated with curing compound shall be kept free of foot and vehicular traffic, and from other sources of abrasion and contamination during the curing period.

3.12.4 Ponding or Immersion

Concrete shall be continually immersed throughout the curing period. Water shall not be more than 20 degrees F less than the temperature of the concrete.

3.12.5 Cold Weather Curing and Protection

When the daily ambient low temperature is less than 32 degrees F the temperature of the concrete shall be maintained above 40 degrees F for the first seven days after placing. During the period of protection removal, the air temperature adjacent to the concrete surfaces shall be controlled so that concrete near the surface will not be subjected to a temperature differential of more than 25 degrees F as determined by suitable temperature measuring devices furnished by the Contractor, as required, and installed adjacent to the concrete surface and 2 inches inside the surface of the concrete. The installation of the thermometers shall be made by the Contractor as directed.

3.13 SETTING BASE PLATES AND BEARING PLATES

After being properly positioned, column base plates, bearing plates for beams and similar structural members, and machinery and equipment base plates shall be set to the proper line and elevation with damp-pack bedding mortar, except where nonshrink grout is indicated. The thickness of the mortar or grout shall be approximately 1/24 the width of the plate, but not less than 3/4 inch. Concrete and metal surfaces in contact with grout shall be clean and free of oil and grease, and concrete surfaces in contact with grout shall be damp and free of laitance when grout is placed. Nonshrink grout shall be used for all base plate locations.

3.13.1 Damp-Pack Bedding Mortar

Damp-pack bedding mortar shall consist of 1 part cement and 2-1/2 parts fine aggregate having water content such that a mass of mortar tightly squeezed in the hand will retain its shape but will crumble when disturbed. The space between the top of the concrete and bottom of the bearing plate or base shall be packed with the bedding mortar by tamping or ramming with a bar or rod until it is completely filled.

3.13.2 Nonshrink Grout

Nonshrink grout shall be a ready-mixed material requiring only the addition of water. Water content shall be the minimum that will provide a flowable mixture and completely fill the space to be grouted without segregation, bleeding, or reduction of strength.

3.13.2.1 Mixing and Placing of Nonshrink Grout

Mixing and placing shall be in conformance with the material manufacturer's instructions and as specified therein. Ingredients shall be thoroughly dry-mixed before adding water. After adding water, the batch shall be mixed for 3 minutes. Batches shall be of size to allow continuous placement of freshly mixed grout. Grout not used within 30 minutes after mixing shall be discarded. The space between the top of the concrete or machinery-bearing surface and the plate shall be filled solid with the grout. Forms shall be of wood or other equally suitable material for completely retaining the grout on all sides and on top and shall be removed after the grout has set. The placed grout shall be carefully worked by rodding or other means to eliminate voids; however, overworking and breakdown of the initial set shall be avoided. Grout shall not be retempered or subjected to vibration from any source. Where clearances are unusually small, placement shall be under pressure with a grout pump. Temperature of the grout, and of surfaces receiving the grout, shall be maintained at 65 to 85 degrees F until after setting.

3.13.2.2 Treatment of Exposed Surfaces

For metal-oxidizing nonshrink grout, exposed surfaces shall be cut back 1 inch and immediately covered with a parge coat of mortar consisting of 1 part portland cement and 2-1/2 parts fine aggregate by weight, with sufficient water to make a plastic mixture. The parge coat shall have a smooth finish. For other mortars or grouts, exposed surfaces shall have a smooth-dense finish and be left untreated. Curing shall comply with paragraph CURING AND PROTECTION.

3.14 TESTING AND INSPECTION FOR CONTRACTOR QUALITY CONTROL

The Contractor shall perform the inspection and tests described below and, based upon the results of these inspections and tests, shall take the action required and shall submit specified reports. When, in the opinion of the Contracting Officer, the concreting operation is out of control, concrete placement shall cease and the operation shall be corrected. The laboratory performing the tests shall be onsite and shall conform with ASTM C 1077. Materials may be subjected to check testing by the Government from samples obtained at the manufacturer, at transfer points, or at the project site. The Government will inspect the laboratory, equipment, and test procedures prior to start of concreting operations and at least once per week thereafter for conformance with ASTM C 1077.

3.14.1 Grading and Corrective Action

3.14.1.1 Fine Aggregate

At least once during each shift when the concrete plant is operating, there shall be one sieve analysis and fineness modulus determination in accordance with ASTM C 136 and COE CRD-C 104 for the fine aggregate or for each fine aggregate if it is batched in more than one size or classification. The location at which samples are taken may be selected by the Contractor as the most advantageous for control. However, the Contractor is responsible for delivering fine aggregate to the mixer within specification limits. When the amount passing on any sieve is outside the specification limits, the fine aggregate shall be immediately resampled and retested. If there is another failure on any sieve, the fact shall immediately reported to the Contracting Officer, concreting shall be stopped, and immediate steps taken to correct the grading.

3.14.1.2 Coarse Aggregate

At least once during each shift in which the concrete plant is operating, there shall be a sieve analysis in accordance with ASTM C 136 for each size of coarse aggregate. The location at which samples are taken may be selected by the Contractor as the most advantageous for production control. However, the Contractor shall be responsible for delivering the aggregate to the mixer within specification limits. A test record of samples of aggregate taken at the same locations shall show the results of the current test as well as the average results of the five most recent tests including the current test. The Contractor may adopt limits for control coarser than the specification limits for samples taken other than as delivered to the mixer to allow for degradation during handling. When the amount passing any sieve is outside the specification limits, the coarse aggregate shall be immediately resampled and retested. If the second sample fails on any sieve, that fact shall be reported to the Contracting Officer. Where two consecutive averages of 5 tests are outside specification limits, the operation shall be considered out of control and shall be reported to the Contracting Officer. Concreting shall be stopped and immediate steps shall

be taken to correct the grading.

3.14.2 Quality of Aggregates

Thirty days prior to the start of concrete placement, the Contractor shall perform all tests for aggregate quality required by ASTM C 33. In addition, after the start of concrete placement, the Contractor shall perform tests for aggregate quality at least every three months, and when the source of aggregate or aggregate quality changes. Samples tested after the start of concrete placement shall be taken immediately prior to entering the concrete mixer.

3.14.3 Scales, Batching and Recording

The accuracy of the scales shall be checked by test weights prior to start of concrete operations and at least once every three months. Such tests shall also be made as directed whenever there are variations in properties of the fresh concrete that could result from batching errors. Once a week the accuracy of each batching and recording device shall be checked during a weighing operation by noting and recording the required weight, recorded weight, and the actual weight batched. At the same time, the Contractor shall test and ensure that the devices for dispensing admixtures are operating properly and accurately. When either the weighing accuracy or batching accuracy does not comply with specification requirements, the plant shall not be operated until necessary adjustments or repairs have been made. Discrepancies in recording accuracies shall be corrected immediately.

3.14.4 Batch-Plant Control

The measurement of concrete materials including cementitious materials, each size of aggregate, water, and admixtures shall be continuously controlled. The aggregate weights and amount of added water shall be adjusted as necessary to compensate for free moisture in the aggregates. The amount of air-entraining agent shall be adjusted to control air content within specified limits. A report shall be prepared indicating type and source of cement used, type and source of pozzolan or slag used, amount and source of admixtures used, aggregate source, the required aggregate and water weights per cubic yard, amount of water as free moisture in each size of aggregate, and the batch aggregate and water weights per cubic yard for each class of concrete batched during each day's plant operation.

3.14.5 Concrete Mixture

a. Air Content Testing. Air content tests shall be made when test specimens are fabricated. In addition, at least two tests for air content shall be made on randomly selected batches of each separate concrete mixture produced during each 8-hour period of concrete production. Additional tests shall be made when excessive variation in workability is reported by the placing foreman or Government inspector. Tests shall be made in accordance with ASTM C 231 for normal weight concrete and ASTM C 173 for lightweight concrete. Test results shall be plotted on control charts which shall at all times be readily available to the Government and shall be submitted weekly. Copies of the current control charts shall be kept in the field by testing crews and results plotted as tests are made. When a single test result reaches either the upper or lower action limit, a second test shall immediately be made. The results of the two tests shall be

averaged and this average used as the air content of the batch to plot on both the air content and the control chart for range, and for determining need for any remedial action. The result of each test, or average as noted in the previous sentence, shall be plotted on a separate control chart for each mixture on which an "average line" is set at the midpoint of the specified air content range from paragraph Air Entrainment. An upper warning limit and a lower warning limit line shall be set 1.0 percentage point above and below the average line, respectively. An upper action limit and a lower action limit line shall be set 1.5 percentage points above and below the average line, respectively. The range between each two consecutive tests shall be plotted on a secondary control chart for range where an upper warning limit is set at 2.0 percentage points and an upper action limit is set at 3.0 percentage points. Samples for air content may be taken at the mixer, however, the Contractor is responsible for delivering the concrete to the placement site at the stipulated air content. If the Contractor's materials or transportation methods cause air content loss between the mixer and the placement, correlation samples shall be taken at the placement site as required by the Contracting Officer, and the air content at the mixer controlled as directed.

b. Air Content Corrective Action. Whenever points on the control chart for percent air reach either warning limit, an adjustment shall immediately be made in the amount of air-entraining admixture batched. As soon as practical after each adjustment, another test shall be made to verify the result of the adjustment. Whenever a point on the secondary control chart for range reaches the warning limit, the admixture dispenser shall be recalibrated to ensure that it is operating accurately and with good reproducibility. Whenever a point on either control chart reaches an action limit line, the air content shall be considered out of control and the concreting operation shall immediately be halted until the air content is under control. Additional air content tests shall be made when concreting is restarted.

c. Slump Testing. In addition to slump tests which shall be made when test specimens are fabricated, at least four slump tests shall be made on randomly selected batches in accordance with ASTM C 143/C 143M for each separate concrete mixture produced during each 8-hour or less period of concrete production each day. Also, additional tests shall be made when excessive variation in workability is reported by the placing foreman or Government inspector. Test results shall be plotted on control charts which shall at all times be readily available to the Government and shall be submitted weekly. Copies of the current control charts shall be kept in the field by testing crews and results plotted as tests are made. When a single slump test reaches or goes beyond either the upper or lower action limit, a second test shall immediately be made. The results of the two tests shall be averaged and this average used as the slump of the batch to plot on both the control charts for slump and the chart for range, and for determining need for any remedial action. Limits shall be set on separate control charts for slump for each type of mixture. The upper warning limit shall be set at 1/2 inch below the maximum allowable slump specified in paragraph Slump in PART 1 for each type of concrete and an upper action limit line and lower action limit line shall be set at the maximum and minimum allowable

slumps, respectively, as specified in the same paragraph. The range between each consecutive slump test for each type of mixture shall be plotted on a single control chart for range on which an upper action limit is set at 2 inches. Samples for slump shall be taken at the mixer. However, the Contractor is responsible for delivering the concrete to the placement site at the stipulated slump. If the Contractor's materials or transportation methods cause slump loss between the mixer and the placement, correlation samples shall be taken at the placement site as required by the Contracting Officer, and the slump at the mixer controlled as directed.

d. Slump Corrective Action. Whenever points on the control charts for slump reach the upper warning limit, an adjustment shall immediately be made in the batch weights of water and fine aggregate. The adjustments are to be made so that the total water content does not exceed that amount allowed by the maximum w/c ratio specified, based on aggregates which are in a saturated surface dry condition. When a single slump reaches the upper or lower action limit, no further concrete shall be delivered to the placing site until proper adjustments have been made. Immediately after each adjustment, another test shall be made to verify the correctness of the adjustment. Whenever two consecutive individual slump tests, made during a period when there was no adjustment of batch weights, produce a point on the control chart for range at or above the upper action limit, the concreting operation shall immediately be halted, and the Contractor shall take appropriate steps to bring the slump under control. Additional slump tests shall be made as directed.

e. Temperature. The temperature of the concrete shall be measured when compressive strength specimens are fabricated. Measurement shall be in accordance with ASTM C 1064/C 1064M. The temperature shall be reported along with the compressive strength data.

f. Strength Specimens. At least one set of test specimens shall be made, for compressive or flexural strength as appropriate, on each different concrete mixture placed during the day for each 500 cubic yards or portion thereof of that concrete mixture placed each day. Additional sets of test specimens shall be made, as directed by the Contracting Officer, when the mixture proportions are changed or when low strengths have been detected. A truly random (not haphazard) sampling plan shall be developed by the Contractor and approved by the Contracting Officer prior to the start of construction. The plan shall assure that sampling is done in a completely random and unbiased manner. A set of test specimens for concrete with a 28-day specified strength per paragraph Strength Requirements in PART 1 shall consist of four specimens, two to be tested at 7 days and two at 28 days. A set of test specimens for concrete with a 90-day strength per the same paragraph shall consist of six specimens, two tested at 7 days, two at 28 days, and two at 90 days. Test specimens shall be molded and cured in accordance with ASTM C 31/C 31M and tested in accordance with ASTM C 39/C 39M for test cylinders and ASTM C 78 for test beams. Results of all strength tests shall be reported immediately to the Contracting Officer. Quality control charts shall be kept for individual strength "tests", ("test" as defined in paragraph Strength Requirements in PART 1) moving average of last 3 "tests" for strength, and moving average for range for the

last 3 "tests" for each mixture. The charts shall be similar to those found in ACI 214.3R.

3.14.6 Inspection Before Placing

Foundations, construction joints, forms, and embedded items shall be inspected by the Contractor in sufficient time prior to each concrete placement in order to certify to the Contracting Officer that they are ready to receive concrete. The results of each inspection shall be reported in writing.

3.14.7 Placing

The placing foreman shall supervise placing operations, shall determine that the correct quality of concrete or grout is placed in each location as specified and as directed by the Contracting Officer, and shall be responsible for measuring and recording concrete temperatures and ambient temperature hourly during placing operations, weather conditions, time of placement, volume placed, and method of placement. The placing foreman shall not permit batching and placing to begin until it has been verified that an adequate number of vibrators in working order and with competent operators are available. Placing shall not be continued if any pile of concrete is inadequately consolidated. If any batch of concrete fails to meet the temperature requirements, immediate steps shall be taken to improve temperature controls.

3.14.8 Vibrators

The frequency and amplitude of each vibrator shall be determined in accordance with COE CRD-C 521 prior to initial use and at least once a month when concrete is being placed. Additional tests shall be made as directed when a vibrator does not appear to be adequately consolidating the concrete. The frequency shall be determined while the vibrator is operating in concrete with the tachometer being held against the upper end of the vibrator head while almost submerged and just before the vibrator is withdrawn from the concrete. The amplitude shall be determined with the head vibrating in air. Two measurements shall be taken, one near the tip and another near the upper end of the vibrator head, and these results averaged. The make, model, type, and size of the vibrator and frequency and amplitude results shall be reported in writing. Any vibrator not meeting the requirements of paragraph Consolidation, shall be immediately removed from service and repaired or replaced.

3.14.9 Curing Inspection

a. Moist Curing Inspections. At least once each shift, and not less than twice per day on both work and non-work days, an inspection shall be made of all areas subject to moist curing. The surface moisture condition shall be noted and recorded.

b. Moist Curing Corrective Action. When a daily inspection report lists an area of inadequate curing, immediate corrective action shall be taken, and the required curing period for those areas shall be extended by 1 day.

c. Membrane Curing Inspection. No curing compound shall be applied until the Contractor has verified that the compound is properly mixed and ready for spraying. At the end of each operation, the Contractor shall estimate the quantity of compound used by

measurement of the container and the area of concrete surface covered, shall compute the rate of coverage in square feet per gallon, and shall note whether or not coverage is uniform.

d. Membrane Curing Corrective Action. When the coverage rate of the curing compound is less than that specified or when the coverage is not uniform, the entire surface shall be sprayed again.

e. Sheet Curing Inspection. At least once each shift and once per day on non-work days, an inspection shall be made of all areas being cured using impervious sheets. The condition of the covering and the tightness of the laps and tapes shall be noted and recorded.

f. Sheet Curing Corrective Action. When a daily inspection report lists any tears, holes, or laps or joints that are not completely closed, the tears and holes shall promptly be repaired or the sheets replaced, the joints closed, and the required curing period for those areas shall be extended by 1 day.

3.14.10 Cold-Weather Protection

At least once each shift and once per day on non-work days, an inspection shall be made of all areas subject to cold-weather protection. Any deficiencies shall be noted, corrected, and reported.

3.14.11 Mixer Uniformity

a. Stationary Mixers. Prior to the start of concrete placing and once every 6 months when concrete is being placed, or once for every 75,000 cubic yards of concrete placed, whichever results in the shortest time interval, uniformity of concrete mixing shall be determined in accordance with ASTM C 94/C 94M.

b. Truck Mixers. Prior to the start of concrete placing and at least once every 6 months when concrete is being placed, uniformity of concrete mixing shall be determined in accordance with ASTM C 94/C 94M. The truck mixers shall be selected randomly for testing. When satisfactory performance is found in one truck mixer, the performance of mixers of substantially the same design and condition of the blades may be regarded as satisfactory.

c. Mixer Uniformity Corrective Action. When a mixer fails to meet mixer uniformity requirements, either the mixing time shall be increased, batching sequence changed, batch size reduced, or adjustments shall be made to the mixer until compliance is achieved.

3.14.12 Reports

All results of tests or inspections conducted shall be reported informally as they are completed and in writing daily. A weekly report shall be prepared for the updating of control charts covering the entire period from the start of the construction season through the current week. During periods of cold-weather protection, reports of pertinent temperatures shall be made daily. These requirements do not relieve the Contractor of the obligation to report certain failures immediately as required in preceding paragraphs. Such reports of failures and the action taken shall be confirmed in writing in the routine reports. The Contracting Officer has

the right to examine all contractor quality control records.

-- End of Section --

SECTION 04200

MASONRY
10/01

PART 1 GENERAL

1.1 REFERENCES

The publications listed below form a part of this specification to the extent referenced. The publications are referred to in the text by basic designation only.

AMERICAN SOCIETY FOR TESTING AND MATERIALS (ASTM)

ASTM A 82	(1997a) Steel Wire, Plain, for Concrete Reinforcement
ASTM A 153/A 153M	(2000) Zinc Coating (Hot-Dip) on Iron and Steel Hardware
ASTM C 67	(2000) Sampling and Testing Brick and Structural Clay Tile
ASTM C 91	(1999) Masonry Cement
ASTM C 216	(2000) Facing Brick (Solid Masonry Units Made from Clay or Shale)
ASTM C 270	(2000) Mortar for Unit Masonry
ASTM C 476	(1999) Grout for Masonry
ASTM C 494/C 494M	(1999a) Chemical Admixtures for Concrete
ASTM C 578	(1995) Rigid, Cellular Polystyrene Thermal Insulation
ASTM C 780	(2000) Preconstruction and Construction Evaluation of Mortars for Plain and Reinforced Unit Masonry
ASTM C 1019	(2000) Sampling and Testing Grout
ASTM C 1072	(2000) Measurement of Masonry Flexural Bond Strength
ASTM C 1289	(1998) Faced Rigid Cellular Polyisocyanurate Thermal Insulation Board

1.2 SUBMITTALS

Government approval is required for submittals with a "G" designation; submittals not having a "G" designation are for information only. When used, a designation following the "G" designation identifies the office that will review the submittal for the Government. The following shall be submitted in accordance with Section 01330 SUBMITTAL PROCEDURES:

SD-02 Shop Drawings

Masonry Work; G

Drawings including plans, elevations, and details of wall reinforcement; offsets; tops, bottoms, and ends of walls; control and expansion joints; and wall openings. Wall dimensions, bar clearances, and wall openings greater than one masonry unit in area shall be shown. No approval will be given to the shop drawings until the Contractor certifies that all openings, including those for mechanical and electrical service, are shown. If, during construction, additional masonry openings are required, the approved shop drawings shall be resubmitted with the additional openings shown along with the proposed changes. Location of these additional openings shall be clearly highlighted. The minimum scale for wall elevations shall be 1/4 inch per foot.

SD-03 Product Data

Clay or Shale Brick; G
Insulation; G

Manufacturer's descriptive data.

Cold Weather Installation; G

Cold weather construction procedures.

SD-04 Samples

Clay or Shale Brick; G
Ceramic Glazed Structural Clay Facing Units; G

Color samples of three stretcher units and one unit for each type of special shape. Units shall show the full range of color and texture.

Anchors, Ties, and Bar Positioners; G

Two of each type used.

Expansion-Joint Material; G

One piece of each type used.

Joint Reinforcement; G

One piece of each type used, including corner and wall intersection pieces, showing at least two cross wires.

Insulation; G

One piece of board type insulation, not less than 16 by 24 inches in size, containing the label indicating the rated permeance and R-values.

Portable Panel; G

One panel of clay or shale brick, 2 by 2 feet, containing approximately 24 brick facings to establish range of color and texture.

SD-06 Test Reports

Efflorescence Test; G
Field Testing of Mortar; G
Field Testing of Grout; G
Prism tests; G
Masonry Cement; G

Test reports from an approved independent laboratory. Test reports on a previously tested material shall be certified as the same as that proposed for use in this project.

SD-07 Certificates

Clay or Shale Brick
Control Joint Keys
Anchors, Ties, and Bar Positioners
Expansion-Joint Materials
Joint Reinforcement
Masonry Cement
Mortar Coloring
Insulation

Certificates of compliance stating that the materials meet the specified requirements.

Insulation; G

Certificate attesting that the polyurethane or polyisocyanurate insulation furnished for the project contains recovered material, and showing an estimated percent of such recovered material.

1.3 DELIVERY, HANDLING, AND STORAGE

Materials shall be delivered, handled, stored, and protected to avoid chipping, breakage, and contact with soil or contaminating material.

1.3.1 Reinforcement, Anchors, and Ties

Steel reinforcing bars, coated anchors, ties, and joint reinforcement shall be stored above the ground. Steel reinforcing bars and uncoated ties shall be free of loose mill scale and rust.

1.3.2 Cementitious Materials, Sand and Aggregates

Cementitious and other packaged materials shall be delivered in unopened containers, plainly marked and labeled with manufacturers' names and brands. Cementitious material shall be stored in dry, weathertight enclosures or be completely covered. Cement shall be handled in a manner that will prevent the inclusion of foreign materials and damage by water or dampness. Sand and aggregates shall be stored in a manner to prevent contamination or segregation.

PART 2 PRODUCTS

2.1 GENERAL REQUIREMENTS

The source of materials which will affect the appearance of the finished work shall not be changed after the work has started except with Contracting Officer's approval.

2.2 CLAY OR SHALE BRICK

Color range and texture of clay or shale brick shall be as indicated and shall conform to the approved sample. Grade SW shall be used for brick in contact with earth or grade and for all exterior work. Grade SW or MW shall be used in other brickwork. Brick shall be tested for efflorescence. Clay or shale brick units shall be delivered factory-blended to provide a uniform appearance and color range in the completed wall.

2.2.1 Solid Clay or Shale Brick

Solid clay or shale brick shall conform to ASTM C 216, Type FBS. Brick size shall be modular and the nominal size of the brick used shall be 2-1/4 inches thick, 3-5/8 inches wide, and 7-5/8 inches long. Minimum compressive strength of the brick shall be 1500 psi.

2.3 PRECAST CONCRETE ITEMS

Trim, lintels, copings, splashblocks and door sills shall be factory-made units from a plant regularly engaged in producing precast concrete units. Unless otherwise indicated, concrete shall be 4,000 psi minimum conforming to Section 03300 CAST-IN-PLACE STRUCTURAL CONCRETE using 1/2 inch to No. 4 nominal-size coarse aggregate, and minimum reinforcement shall be the reinforcement required for handling of the units. Clearance of 3/4 inch shall be maintained between reinforcement and faces of units. Unless precast-concrete items have been subjected during manufacture to saturated-steam pressure of at least 120 psi for at least 5 hours, the items, after casting, shall be either damp-cured for 24 hours or steam-cured and shall then be aged under cover for 28 days or longer. Cast-concrete members weighing over 80 pounds shall have built-in loops of galvanized wire or other approved provisions for lifting and anchoring. Units shall have beds and joints at right angles to the face, with sharp true arises and shall be cast with drip grooves on the underside where units overhang walls. Exposed-to-view surfaces shall be free of surface voids, spalls, cracks, and chipped or broken edges. Precast units exposed-to-view shall be of uniform appearance and color. Unless otherwise specified, units shall have a smooth dense finish. Prior to use, each item shall be wetted and inspected for crazing. Items showing evidence of dusting, spalling, crazing, or having surfaces treated with a protective coating will be rejected.

2.3.1 Splash Blocks

Splash blocks shall be as detailed. Reinforcement shall be the manufacturer's standard.

2.4 MORTAR

Mortar shall be Type S in accordance with the proportion specification of ASTM C 270 except Type S cement-lime mortar proportions shall be 1 part cement, 1/2 part lime and 4-1/2 parts aggregate; when masonry cement ASTM C 91 is used the maximum air content shall be limited to 12 percent and

performance equal to cement-lime mortar shall be verified. Verification of masonry cement performance shall be based on ASTM C 780 and ASTM C 1072. Cement shall have a low alkali content and be of one brand. Aggregates shall be from one source.

2.4.1 Admixtures

In cold weather, a non-chloride based accelerating admixture may be used subject to approval. Accelerating admixture shall be non-corrosive, shall contain less than 0.2 percent chlorides, and shall conform to ASTM C 494/C 494M, Type C.

2.4.2 Coloring

Mortar coloring shall be added to the mortar used for exposed masonry surfaces to produce a uniform color matching approved sample. Mortar coloring shall not exceed 3 percent of the weight of cement for carbon black and ten percent of the weight of cement for all other pigments. Mortar coloring shall be chemically inert, of finely ground limeproof pigment, and furnished in accurately pre-measured and packaged units that can be added to a measured amount of cement.

2.5 GROUT

Grout shall conform to ASTM C 476. Cement used in grout shall have a low alkali content. Grout slump shall be between 8 and 10 inches. Grout shall be used subject to the limitations of Table III. Proportions shall not be changed and materials with different physical or chemical characteristics shall not be used in grout for the work unless additional evidence is furnished that the grout meets the specified requirements.

2.5.1 Admixtures

In cold weather, a non-chloride based accelerating admixture may be used subject to approval. Accelerating admixture shall be non-corrosive, shall contain less than 0.2 percent chlorides, and shall conform to ASTM C 494/C 494M, Type C.

2.5.2 Grout Barriers

Grout barriers for vertical cores shall consist of fine mesh wire, fiberglass, or expanded metal.

2.6 ANCHORS, TIES, AND BAR POSITIONERS

Anchors and ties shall be fabricated without drips or crimps and shall be zinc-coated in accordance with ASTM A 153/A 153M, Class B-2. Steel wire used for anchors and ties shall be fabricated from steel wire conforming to ASTM A 82. Anchors and ties shall be sized to provide a minimum of 5/8 inch mortar cover from either face.

2.6.1 Adjustable Anchors

Adjustable anchors shall be 3/16 inch diameter steel wire, triangular-shaped. Anchors attached to steel shall be 5/16 inch diameter steel bars placed to provide 1/16 inch play between flexible anchors and structural steel members. Spacers shall be welded to rods and columns. Equivalent welded-on steel anchor rods or shapes standard with the flexible-anchor manufacturer may be furnished when approved. Welds shall

be cleaned and given one coat of zinc-rich touch up paint.

2.7 INSULATION

2.7.1 Rigid Board-Type Insulation

Rigid board-type insulation shall be extruded polystyrene, polyurethane, or polyisocyanurate. Polystyrene shall conform to ASTM C 578. Polyisocyanurate shall conform to ASTM C 1289, Type I, Class 1 or 2, faced with aluminum foil on both sides of the foam. The insulation shall be a standard product and shall be marked with not less than the manufacturer's trademark or name, the specification number, the permeance and R-values.

2.7.1.1 Insulation Thickness and Air Space

The cavity space shall allow for a maximum insulation thickness of 1-1/2 inches, and a minimum air space of 3/4 inch.

2.7.1.2 Aged R-Value

The insulation shall provide a minimum aged R-value of 11 for the overall thickness. The aged R-value shall be determined at 75 degrees F in accordance with the appropriate referenced specification. The stated R-value of the insulation shall be certified by an independent testing laboratory or certified by an independent Registered Professional Engineer if tests are conducted in the manufacturer's laboratory.

2.7.1.3 Recovered Material

Contractor shall comply with EPA requirements in accordance with Section 01670 RECYCLED / RECOVERD MATERIALS. The polyurethane or polyisocyanurate foam shall have a minimum recovered material content of 9 percent by weight of the core material.

2.7.2 Insulation Adhesive

Insulation adhesive shall be specifically prepared to adhere the insulation to the masonry and, where applicable, to the thru-wall flashing. The adhesive shall not deleteriously affect the insulation, and shall have a record of satisfactory and proven performance for the conditions under which to be used.

2.8 FLASHING

Flashing shall be as specified in Section 07600 SHEET METALWORK, GENERAL.

2.9 WEEP HOLE VENTILATORS

Weephole ventilators shall be prefabricated aluminum grill type vents designed to prevent insect entry with maximum air entry. Ventilators shall be sized to match modular construction with a standard 3/8 inch mortar joint.

PART 3 EXECUTION

3.1 ENVIRONMENTAL REQUIREMENTS

3.1.1 Hot Weather Installation

The following precautions shall be taken if masonry is erected when the ambient air temperature is more than 99 degrees F in the shade and the relative humidity is less than 50 percent. All masonry materials shall be shaded from direct sunlight; mortar beds shall be spread no more than 4 feet ahead of masonry; masonry units shall be set within one minute of spreading mortar; and after erection, masonry shall be protected from direct exposure to wind and sun for 48 hours.

3.1.2 Cold Weather Installation

Before erecting masonry when ambient temperature or mean daily air temperature falls below 40 degrees F, a written statement of proposed cold weather construction procedures shall be submitted for approval. The following precautions shall be taken during all cold weather erection.

3.1.2.1 Preparation

Ice or snow formed on the masonry bed shall be thawed by the application of heat. Heat shall be applied carefully until the top surface of the masonry is dry to the touch. Sections of masonry deemed frozen and damaged shall be removed before continuing construction of those sections.

a. Air Temperature 40 to 32 Degrees F. Sand or mixing water shall be heated to produce mortar temperatures between 40 and 120 degrees F.

b. Air Temperature 32 to 25 Degrees F. Sand and mixing water shall be heated to produce mortar temperatures between 40 and 120 degrees F. Temperature of mortar on boards shall be maintained above freezing.

c. Air Temperature 25 to 20 Degrees F. Sand and mixing water shall be heated to provide mortar temperatures between 40 and 120 degrees F. Temperature of mortar on boards shall be maintained above freezing. Sources of heat shall be used on both sides of walls under construction. Windbreaks shall be employed when wind is in excess of 15 mph.

d. Air Temperature 20 Degrees F and below. Sand and mixing water shall be heated to provide mortar temperatures between 40 and 120 degrees F. Enclosure and auxiliary heat shall be provided to maintain air temperature above 32 degrees F. Temperature of units when laid shall not be less than 20 degrees F.

3.1.2.2 Completed Masonry and Masonry Not Being Worked On

a. Mean daily air temperature 40 to 32 degrees F. Masonry shall be protected from rain or snow for 24 hours by covering with weather-resistive membrane.

b. Mean daily air temperature 32 to 25 degrees F. Masonry shall be completely covered with weather-resistant membrane for 24 hours.

c. Mean Daily Air Temperature 25 to 20 degrees F. Masonry shall be completely covered with insulating blankets or equally protected for 24 hours.

d. Mean Daily Temperature 20 degrees F and Below. Masonry temperature shall be maintained above 32 degrees F for 24 hours by enclosure and supplementary heat, by electric heating blankets,

infrared heat lamps, or other approved methods.

3.2 LAYING MASONRY UNITS

Masonry units shall be laid in running bond pattern. Facing courses shall be level. Each unit shall be adjusted to its final position while mortar is still soft and plastic. Units that have been disturbed after the mortar has stiffened shall be removed, cleaned, and relaid with fresh mortar. Air spaces, cavities, chases, expansion joints, and spaces to be grouted shall be kept free from mortar and other debris. Units used in exposed masonry surfaces shall be selected from those having the least amount of chipped edges or other imperfections detracting from the appearance of the finished work. Vertical joints shall be kept plumb. Units being laid and surfaces to receive units shall be free of water film and frost. Solid units shall be laid in a nonfurrowed full bed of mortar. Mortar for veneer wythes shall be beveled and sloped toward the center of the wythe from the cavity side. Units shall be shoved into place so that the vertical joints are tight. Vertical joints of brick except where indicated at control, expansion, and isolation joints, shall be completely filled with mortar. Mortar will be permitted to protrude up to 1/2 inch into the space or cells to be grouted. Means shall be provided to prevent mortar from dropping into the space below.

3.2.1 Surface Preparation

Surfaces upon which masonry is placed shall be cleaned of laitance, dust, dirt, oil, organic matter, or other foreign materials and shall be slightly roughened to provide a surface texture with a depth of at least 1/8 inch. Sandblasting shall be used, if necessary, to remove laitance from pores and to expose the aggregate.

3.2.2 Forms and Shores

Forms and shores shall be sufficiently rigid to prevent deflections which may result in cracking or other damage to supported masonry and sufficiently tight to prevent leakage of mortar and grout. Supporting forms and shores shall not be removed in less than 10 days.

3.2.3 Clay or Shale Brick Units

Brick facing shall be laid with the better face exposed. Brick shall be laid in running bond with each course bonded at corners, unless otherwise indicated. Molded brick shall be laid with the frog side down. Brick that is cored, recessed, or has other deformations may be used in sills, treads, soldier courses, except where deformations will be exposed to view.

3.2.3.1 Wetting of Units

Wetting of clay, shale brick, or hollow brick units having an initial rate of absorption of more than 1 gram per minute per square inch of bed surface shall be in conformance with ASTM C 67. The method of wetting shall ensure that each unit is nearly saturated but surface dry when laid.

3.2.3.2 Solid Units

Bed, head, and collar joints shall be completely filled with mortar.

3.2.4 Tolerances

Masonry shall be laid plumb, true to line, with courses level. Bond pattern shall be kept plumb throughout. Corners shall be square unless noted otherwise. Except for walls constructed of prefaced concrete masonry units, masonry shall be laid within the following tolerances (plus or minus unless otherwise noted):

TABLE II

TOLERANCES

Variation from the plumb in the lines and surfaces of columns, walls and arises	
In adjacent masonry units	1/8 inch
In 10 feet	1/4 inch
In 20 feet	3/8 inch
In 40 feet or more	1/2 inch
Variations from the plumb for external corners, expansion joints, and other conspicuous lines	
In 20 feet	1/4 inch
In 40 feet or more	1/2 inch
Variations from the level for exposed lintels, sills, parapets, horizontal grooves, and other conspicuous lines	
In 20 feet	1/4 inch
In 40 feet or more	1/2 inch
Variation from level for bed joints and top surfaces of bearing walls	
In 10 feet	1/4 inch
In 40 feet or more	1/2 inch
Variations from horizontal lines	
In 10 feet	1/4 inch
In 20 feet	3/8 inch
In 40 feet or more	1/2 inch
Variations in cross sectional dimensions of columns and in thickness of walls	
Minus	1/4 inch
Plus	1/2 inch

3.2.5 Cutting and Fitting

Full units of the proper size shall be used wherever possible, in lieu of cut units. Cutting and fitting, including that required to accommodate the

work of others, shall be done by masonry mechanics using power masonry saws. Concrete masonry units may be wet or dry cut. Wet cut units, before being placed in the work, shall be dried to the same surface-dry appearance as uncut units being laid in the wall. Cut edges shall be clean, true and sharp. Openings in the masonry shall be made carefully so that wall plates, cover plates or escutcheons required by the installation will completely conceal the openings and will have bottoms parallel with the masonry bed joints. Reinforced masonry lintels shall be provided above openings over 12 inches wide for pipes, ducts, cable trays, and other wall penetrations, unless steel sleeves are used.

3.2.6 Jointing

Joints shall be tooled when the mortar is thumbprint hard. Horizontal joints shall be tooled last. Joints shall be brushed to remove all loose and excess mortar. Mortar joints shall be finished as follows:

3.2.6.1 Tooled Joints

Joints in exposed exterior and interior masonry surfaces shall be tooled slightly concave. Joints shall be tooled with a jointer slightly larger than the joint width so that complete contact is made along the edges of the unit. Tooling shall be performed so that the mortar is compressed and the joint surface is sealed. Jointer of sufficient length shall be used to obtain a straight and true mortar joint.

3.2.6.2 Door and Window Frame Joints

On the exposed interior side of exterior frames, joints between frames and abutting masonry walls shall be raked to a depth of 3/8 inch. On the exterior side of exterior frames, joints between frames and abutting masonry walls shall be raked to a depth of 3/8 inch.

3.2.7 Joint Widths

Joint widths shall be as follows:

3.2.7.1 Brick

Brick joint widths shall be the difference between the actual and nominal dimensions of the brick in either height or length. Brick expansion joint widths shall be as shown.

3.2.8 Embedded Items

Spaces around built-in items shall be filled with mortar. Openings around flush-mount electrical outlet boxes in wet locations shall be pointed with mortar. Anchors, ties, wall plugs, accessories, flashing, pipe sleeves and other items required to be built-in shall be embedded as the masonry work progresses. Anchors, ties and joint reinforcement shall be fully embedded in the mortar. Cells receiving anchor bolts and cells of the first course below bearing plates shall be filled with grout.

3.2.9 Unfinished Work

Unfinished work shall be stepped back for joining with new work. Toothing may be resorted to only when specifically approved. Loose mortar shall be removed and the exposed joints shall be thoroughly cleaned before laying new work.

3.2.10 Masonry Wall Intersections

Each course shall be masonry bonded at corners and elsewhere as shown. Masonry walls shall be anchored or tied together at corners and intersections with bond beam reinforcement and prefabricated corner or tee pieces of joint reinforcement as shown.

3.3 WEEP HOLES

Weep holes shall be provided not more than 24 inches on centers in mortar joints of the exterior wythe above wall flashing, over foundations, bond beams, and any other horizontal interruptions of the cavity. Weep holes shall be formed by placing short lengths of well-greased No. 10, 5/16 inch nominal diameter, braided cotton sash cord in the mortar and withdrawing the cords after the wall has been completed. Weep holes shall be constructed using weep hole ventilators. Other approved methods may be used for providing weep holes. Weep holes shall be kept free of mortar and other obstructions.

3.4 COMPOSITE WALLS

Masonry wythes shall be tied together with joint reinforcement or with unit wall ties. Facing shall be anchored to concrete backing with adjustable steel wire anchors shot into concrete in the face of the concrete as specified in Section 03300 CAST-IN-PLACE STRUCTURAL CONCRETE. The facing wythe shall be anchored or tied to the backup at a maximum spacing of 16 inches on center vertically and 24 inches on center horizontally. Unit ties shall be spaced not over 24 inches on centers horizontally, in courses not over 16 inches apart vertically, staggered in alternate courses. Ties shall be laid not closer than 5/8 inch to either masonry face. Ties shall not extend through control joints. Collar joints between masonry facing and masonry backup shall be filled solidly with grout.

3.5 MORTAR

Mortar shall be mixed in a mechanically operated mortar mixer for at least 3 minutes, but not more than 5 minutes. Measurement of ingredients for mortar shall be by volume. Ingredients not in containers, such as sand, shall be accurately measured by the use of measuring boxes. Water shall be mixed with the dry ingredients in sufficient amount to provide a workable mixture which will adhere to the vertical surfaces of masonry units. Mortar that has stiffened because of loss of water through evaporation shall be retempered by adding water to restore the proper consistency and workability. Mortar that has reached its initial set or that has not been used within 2 hours after mixing shall be discarded.

3.6 PLACING GROUT

Voids at door and window jambs, and other indicated spaces shall be filled solid with grout. Walls below grade, shall be filled solid with grout. Units other than open end units may require grouting each course to preclude voids in the units. Grout not in place within 1-1/2 hours after water is first added to the batch shall be discarded. Sufficient time shall be allowed between grout lifts to preclude displacement or cracking of face shells of masonry units. If blowouts, flowouts, misalignment, or cracking of face shells should occur during construction, the wall shall be torn down and rebuilt.

3.6.1 Grouting Equipment

3.6.1.1 Grout Pumps

Pumping through aluminum tubes will not be permitted. Pumps shall be operated to produce a continuous stream of grout without air pockets, segregation, or contamination. Upon completion of each day's pumping, waste materials and debris shall be removed from the equipment, and disposed of outside the masonry.

3.6.1.2 Vibrators

Internal vibrators shall maintain a speed of not less than 5,000 impulses per minute when submerged in the grout. At least one spare vibrator shall be maintained at the site at all times. Vibrators shall be applied at uniformly spaced points not further apart than the visible effectiveness of the machine. Duration of vibration shall be limited to time necessary to produce satisfactory consolidation without causing segregation.

3.6.2 Grout Placement

Masonry shall be laid to the top of a pour before placing grout. Grout shall not be placed in two-wythe solid unit masonry cavity until mortar joints have set for at least 3 days during hot weather and 5 days during cold damp weather. Grout shall be placed using a hand bucket, concrete hopper, or grout pump to completely fill the grout spaces without segregation of the aggregates. Vibrators shall not be inserted into lower pours that are in a semi-solidified state. The height of grout pours and type of grout used shall be limited by the dimensions of grout spaces as indicated in Table III. Low-lift grout methods may be used on pours up to and including 5 feet in height. High-lift grout methods shall be used on pours exceeding 5 feet in height.

3.6.2.1 Low-Lift Method

Grout shall be placed at a rate that will not cause displacement of the masonry due to hydrostatic pressure of the grout. Mortar protruding more than 1/2 inch into the grout space shall be removed before beginning the grouting operation. Grout pours 12 inches or less in height shall be consolidated by mechanical vibration or by puddling. Grout pours over 12 inches in height shall be consolidated by mechanical vibration and reconsolidated by mechanical vibration after initial water loss and settlement has occurred. Vibrators shall not be inserted into lower pours that are in a semi-solidified state. Low-lift grout shall be used subject to the limitations of Table III.

3.6.2.2 High-Lift Method

Mortar droppings shall be cleaned from the bottom of the grout space and from reinforcing steel. Mortar protruding more than 1/4 inch into the grout space shall be removed by dislodging the projections with a rod or stick as the work progresses. Reinforcing, bolts, and embedded connections shall be rigidly held in position before grouting is started. CMU units shall not be pre-wetted. Grout, from the mixer to the point of deposit in the grout space shall be placed as rapidly as practical by pumping and placing methods which will prevent segregation of the mix and cause a minimum of grout splatter on reinforcing and masonry surfaces not being immediately encased in the grout lift. The individual lifts of grout shall be limited to 4 feet in height. The first lift of grout shall be placed to

a uniform height within the pour section and vibrated thoroughly to fill all voids. This first vibration shall follow immediately behind the pouring of the grout using an approved mechanical vibrator. After a waiting period sufficient to permit the grout to become plastic, but before it has taken any set, the succeeding lift shall be poured and vibrated 12 to 18 inches into the preceding lift. If the placing of the succeeding lift is going to be delayed beyond the period of workability of the preceding, each lift shall be reconsolidated by reworking with a second vibrator as soon as the grout has taken its settlement shrinkage. The waiting, pouring, and reconsolidation steps shall be repeated until the top of the pour is reached. The top lift shall be reconsolidated after the required waiting period. The high-lift grouting of any section of wall between vertical grout barriers shall be completed to the top of a pour in one working day unless a new series of cleanout holes is established and the resulting horizontal construction joint cleaned. High-lift grout shall be used subject to the limitations in Table III.

TABLE III

POUR HEIGHT AND TYPE OF GROUT FOR VARIOUS GROUT SPACE DIMENSIONS

Maximum Grout Pour Height (feet) (4)	Grout Type	Grouting Procedure	Minimum Dimensions of the Total Clear Areas Within Grout Spaces and Cells (in.) (1,2) Multiwythe Masonry (3)	Hollow-unit Masonry
1	Fine	Low Lift	3/4	1-1/2 x 2
5	Fine	Low Lift	2	2 x 3
8	Fine	High Lift	2	2 x 3
12	Fine	High Lift	2-1/2	2-1/2 x 3
24	Fine	High Lift	3	3 x 3
1	Coarse	Low Lift	1-1/2	1-1/2 x 3
5	Coarse	Low Lift	2	2-1/2 x 3
8	Coarse	High Lift	2	3 x 3
12	Coarse	High Lift	2-1/2	3 x 3
24	Coarse	High Lift	3	3 x 4

Notes:

(1) The actual grout space or cell dimension must be larger than the sum of the following items:
a) The required minimum dimensions of total clear areas given in the table above;
b) The width of any mortar projections within the space;
c) The horizontal projections of the diameters of the horizontal reinforcing bars within a cross section of the grout space or cell.

(2) The minimum dimensions of the total clear areas shall be made up of one or more open areas, with at least one area being 3/4 inch or greater in width.

(3) For grouting spaces between masonry wythes.

(4) Where only cells of hollow masonry units containing reinforcement are grouted, the maximum height of the pour shall not exceed the distance between horizontal bond beams.

3.7 CONTROL JOINTS

Control joints shall be provided as indicated and shall be constructed in accordance with the details shown on the drawings. The vertical mortar joint at control joint locations shall be continuous. This shall be accomplished by utilizing half blocks in alternating courses on each side of the joint. In single wythe exterior masonry walls, the exterior control joints shall be raked to a depth of 3/4 inch; backer rod and sealant shall be installed in accordance with Section 07900 JOINT SEALING. Exposed interior control joints shall be raked to a depth of 1/4 inch. Concealed control joints shall be flush cut.

3.8 BRICK EXPANSION JOINTS

Brick expansion joints shall be provided and constructed as shown on the drawings. Joints shall be kept free of mortar and other debris.

3.9 SHELF ANGLES

Shelf angles shall be adjusted as required to keep the masonry level and at the proper elevation. Shelf angles shall be galvanized. Shelf angles shall be provided in sections not longer than 10 feet and installed with a 1/4 inch gap between sections. Shelf angles shall be mitered and welded at building corners with each angle not shorter than 4 feet, unless limited by wall configuration.

3.10 SILLS AND COPINGS

Sills and copings shall be set in a full bed of mortar with faces plumb and true.

3.11 ANCHORAGE TO CONCRETE AND STRUCTURAL STEEL

3.11.1 Anchorage to Concrete

Anchorage of masonry to the face of concrete columns, beams, or walls shall be with adjustable steel wire anchors spaced not over 16 inches on centers vertically and 24 inches on center horizontally.

3.12 INSULATION

Anchored veneer walls shall be insulated, where shown, by installing board-type insulation on the cavity side of the inner wythe. Board type insulation shall be applied directly to the masonry or thru-wall flashing with adhesive. Insulation shall be neatly fitted between obstructions without impaling of insulation on ties or anchors. The insulation shall be applied in parallel courses with vertical joints breaking midway over the course below and shall be applied in moderate contact with adjoining units without forcing, and shall be cut to fit neatly against adjoining surfaces.

3.13 SPLASH BLOCKS

Splash blocks shall be located as shown.

3.14 POINTING AND CLEANING

After mortar joints have attained their initial set, but prior to hardening, mortar and grout daubs or splashings shall be completely removed

from masonry-unit surfaces that will be exposed or painted. Before completion of the work, defects in joints of masonry to be exposed or painted shall be raked out as necessary, filled with mortar, and tooled to match existing joints. Immediately after grout work is completed, scum and stains which have percolated through the masonry work shall be removed using a high pressure stream of water and a stiff bristled brush. Masonry surfaces shall not be cleaned, other than removing excess surface mortar, until mortar in joints has hardened. Masonry surfaces shall be left clean, free of mortar daubs, dirt, stain, and discoloration, including scum from cleaning operations, and with tight mortar joints throughout. Metal tools and metal brushes shall not be used for cleaning.

3.14.1 Clay or Shale Brick Surfaces

Exposed clay or shale brick masonry surfaces shall be cleaned as necessary to obtain surfaces free of stain, dirt, mortar and grout daubs, efflorescence, and discoloration or scum from cleaning operations. After cleaning, the sample panel of similar material shall be examined for discoloration or stain as a result of cleaning. If the sample panel is discolored or stained, the method of cleaning shall be changed to assure that the masonry surfaces in the structure will not be adversely affected. The exposed masonry surfaces shall be water-soaked and then cleaned with a solution proportioned 1/2 cup trisodium phosphate and 1/2 cup laundry detergent to one gallon of water or cleaned with a proprietary masonry cleaning agent specifically recommended for the color and texture by the clay products manufacturer. The solution shall be applied with stiff fiber brushes, followed immediately by thorough rinsing with clean water. Proprietary cleaning agents shall be used in conformance with the cleaning product manufacturer's printed recommendations. Efflorescence shall be removed in conformance with the brick manufacturer's recommendations.

3.15 PROTECTION

Facing materials shall be protected against staining. Top of walls shall be covered with nonstaining waterproof covering or membrane when work is not in progress. Covering of the top of the unfinished walls shall continue until the wall is waterproofed with a complete roof or parapet system. Covering shall extend a minimum of 2 feet down on each side of the wall and shall be held securely in place. Before starting or resuming, top surface of masonry in place shall be cleaned of loose mortar and foreign material.

3.16 TEST REPORTS

3.16.1 Field Testing of Mortar

At least three specimens of mortar shall be taken each day. A layer of mortar 1/2 to 5/8 inch thick shall be spread on the masonry units and allowed to stand for one minute. The specimens shall then be prepared and tested for compressive strength in accordance with ASTM C 780.

3.16.2 Field Testing of Grout

Field sampling and testing of grout shall be in accordance with the applicable provisions of ASTM C 1019. A minimum of three specimens of grout per day shall be sampled and tested. Each specimen shall have a minimum ultimate compressive strength of 2000 psi at 28 days.

3.16.3 Efflorescence Test

Brick which will be exposed to weathering shall be tested for efflorescence. Tests shall be scheduled far enough in advance of starting masonry work to permit retesting if necessary. Sampling and testing shall conform to the applicable provisions of ASTM C 67. Units meeting the definition of "effloresced" will be subject to rejection.

-- End of Section --

SECTION 05500A

MISCELLANEOUS METAL
04/01

PART 1 GENERAL

1.1 REFERENCES

The publications listed below form a part of this specification to the extent referenced. The publications are referred to in the text by basic designation only.

AMERICAN NATIONAL STANDARDS INSTITUTE (ANSI)

ANSI A14.3	(1992) Ladders - Fixed - Safety Requirements

AMERICAN SOCIETY FOR TESTING AND MATERIALS (ASTM)

ASTM A 36/A 36M	(2000) Carbon Structural Steel
ASTM A 53/A 53M	(1999b) Pipe, Steel, Black and Hot-Dipped, Zinc-Coated, Welded and Seamless
ASTM A 123/A 123M	(2000) Zinc (Hot-Dip Galvanized) Coatings on Iron and Steel Products
ASTM A 467/A 467M	(1998) Machine and Coil Chain
ASTM A 653/A 653M	(2000) Steel Sheet, Zinc-Coated (Galvanized) or Zinc-Iron Alloy-Coated (Galvannealed) by the Hot-Dip Process
ASTM A 924/A 924M	(1999) General Requirements for Steel Sheet, Metallic-Coated by the Hot-Dip Process

AMERICAN WELDING SOCIETY (AWS)

AWS D1.1	(2000) Structural Welding Code - Steel

NATIONAL ASSOCIATION OF ARCHITECTURAL METAL MANUFACTURERS (NAAMM)

NAAMM MBG 531	(1994) Metal Bar Grating Manual

1.2 SUBMITTALS

Government approval is required for submittals with a "G" designation; submittals not having a "G" designation are for information only. When used, a designation following the "G" designation identifies the office that will review the submittal for the Government. The following shall be submitted in accordance with Section 01330 SUBMITTAL PROCEDURES:

SD-02 Shop Drawings

Miscellaneous Metal Items.

Detail drawings indicating material thickness, type, grade, and class; dimensions; and construction details. Drawings shall include catalog cuts, erection details, manufacturer's descriptive data and installation instructions, and templates.

SD-04 Samples

Miscellaneous Metal Items.

Samples shall be full size, taken from manufacturer's stock, and shall be complete as required for installation in the structure. Samples may be installed in the work, provided each sample is clearly identified and its location recorded.

1.3 GENERAL REQUIREMENTS

The Contractor shall verify all measurements and shall take all field measurements necessary before fabrication. Welding to or on structural steel shall be in accordance with AWS D1.1. Items specified to be galvanized, when practicable and not indicated otherwise, shall be hot-dip galvanized after fabrication. Galvanizing shall be in accordance with ASTM A 123/A 123M, ASTM A 653/A 653M, or ASTM A 924/A 924M, as applicable. Exposed fastenings shall be compatible materials, shall generally match in color and finish, and shall harmonize with the material to which fastenings are applied. Materials and parts necessary to complete each item, even though such work is not definitely shown or specified, shall be included. Poor matching of holes for fasteners shall be cause for rejection. Fastenings shall be concealed where practicable. Thickness of metal and details of assembly and supports shall provide strength and stiffness. Joints exposed to the weather shall be formed to exclude water.

1.4 DISSIMILAR MATERIALS

Where dissimilar metals are in contact, or where aluminum is in contact with concrete, mortar, masonry, wet or pressure-treated wood, or absorptive materials subject to wetting, the surfaces shall be protected with a coat of bituminous paint or asphalt varnish.

1.5 WORKMANSHIP

Miscellaneous metalwork shall be well formed to shape and size, with sharp lines and angles and true curves. Drilling and punching shall produce clean true lines and surfaces. Welding shall be continuous along the entire area of contact except where tack welding is permitted. Exposed connections of work in place shall not be tack welded. Exposed welds shall be ground smooth. Exposed surfaces of work in place shall have a smooth finish, and unless otherwise approved, exposed riveting shall be flush. Where tight fits are required, joints shall be milled. Corner joints shall be coped or mitered, well formed, and in true alignment. Work shall be accurately set to established lines and elevations and securely fastened in place. Installation shall be in accordance with manufacturer's installation instructions and approved drawings, cuts, and details.

1.6 ANCHORAGE

Anchorage shall be provided where necessary for fastening miscellaneous metal items securely in place. Anchorage not otherwise specified or

indicated shall include slotted inserts made to engage with the anchors, expansion shields, and power-driven fasteners when approved for concrete; toggle bolts and through bolts for masonry; machine and carriage bolts for steel; and lag bolts and screws for wood.

1.7 SHOP PAINTING

Surfaces of ferrous metal except galvanized surfaces, shall be cleaned and shop coated with the manufacturer's standard protective coating unless otherwise specified. Surfaces of items to be embedded in concrete shall not be painted. Items to be finish painted shall be prepared according to manufacturer's recommendations or as specified.

PART 2 PRODUCTS

2.1 ACCESS DOORS AND PANELS

Doors and panels shall be flush type unless otherwise indicated. Frames for access doors shall be fabricated of not lighter than 16 gauge steel with welded joints and finished with anchorage for securing into construction. Access doors shall be a minimum of 14 by 20 inches and of not lighter than 14 gauge steel, with stiffened edges, complete with attachments. Access doors shall be hinged to frame and provided with a flush face, screw driver operated latch. Exposed metal surfaces shall have a baked enamel finish.

2.2 CORNER GUARDS AND SHIELDS

Corner guards and shields for jambs and sills of openings and edges of platforms shall be steel shapes and plates anchored in masonry or concrete with welded steel straps or end weld stud anchors. Corner guards for use with glazed or ceramic tile finish on walls shall be formed of 0.0625 inch thick corrosion-resisting steel with polished or satin finish, shall extend 5 feet above the top of cove base or to the top of the wainscot, whichever is less, and shall be securely anchored to the supporting wall. Corner guards on exterior shall be galvanized.

2.3 PIPE GUARDS

Pipe guards shall be heavy duty steel pipe conforming to ASTM A 53/A 53M, Type E or S, weight STD, black finish.

2.4 DOWNSPOUT BOOTS

Downspout boots shall be cast iron with receiving bells sized to fit downspouts.

2.5 FLOOR GRATINGS AND FRAMES

Carbon steel grating shall be designed in accordance with NAAMM MBG 531 to meet the indicated load requirements. Edges shall be banded with bars 1/4 inch less in height than bearing bars for grating sizes above 3/4 inch. Banding bars shall be flush with the top of bearing grating. Frames shall be of welded steel construction finished to match the grating. Floor gratings and frames shall be galvanized after fabrication.

2.6 HANDRAILS

Handrails shall be designed to resist a concentrated load of 200 pounds in

any direction at any point of the top of the rail or 20 pounds per foot applied horizontally to top of the rail, whichever is more severe.

2.6.1 Steel Handrails, Including Carbon Steel Inserts

Steel handrails, including inserts in concrete, shall be steel pipe conforming to ASTM A 53/A 53M. Steel railings shall be 1-1/2 inch nominal size. Railings shall be hot-dip galvanized. Pipe collars shall be hot-dip galvanized steel.

a. Joint posts, rail, and corners shall be fabricated by one of the following methods:

(1) Flush type rail fittings of commercial standard, welded and ground smooth with railing splice locks secured with 3/8 inch hexagonal recessed-head setscrews.

(2) Mitered and welded joints by fitting post to top rail and intermediate rail to post, mitering corners, groove welding joints, and grinding smooth. Railing splices shall be butted and reinforced by a tight fitting interior sleeve not less than 6 inches long.

(3) Railings may be bent at corners in lieu of jointing, provided bends are made in suitable jigs and the pipe is not crushed.

b. Removable sections, toe-boards, and brackets shall be provided as indicated.

2.7 LADDERS

Ladders shall be galvanized steel fixed rail type in accordance with ANSI A14.3.

2.8 MISCELLANEOUS

Miscellaneous plates and shapes for items that do not form a part of the structural steel framework, such as lintels, sill angles, miscellaneous mountings, and frames, shall be provided to complete the work.

2.9 SAFETY CHAINS

Safety chains shall be galvanized welded steel, proof coil chain tested in accordance with ASTM A 467/A 467M, Class CS. Safety chains shall be straight link style, 3/16 inch diameter, minimum 12 links per foot and with bolt type snap hooks on each end. Eye bolts for attachment of chains shall be galvanized 3/8 inch bolt with 3/4 inch eye, anchored as indicated. Two chains shall be furnished for each guarded opening.

2.10 SAFETY NOSING

Safety nosings shall be of cast aluminum with cross-hatched, abrasive surface. Nosing shall be 3 inches wide and terminating at not more than 6 inches from the ends of treads, except nosing for metal pan cement-filled treads shall extend the full length of the tread. Safety nosings shall be provided with anchors not less than 3/4 inch long. Integrally cast mushroom anchors are not acceptable.

2.11 STEEL STAIRS

Steel stairs shall be complete with structural or formed channel stringers, slip-resistant metallic treads, landings, columns, handrails, and necessary bolts and other fastenings as indicated. Structural steel shall conform to ASTM A 36/A 36M. Stairs and accessories shall be galvanized. Risers on stairs with metal pan treads shall be deformed to form a sanitary cove to retain the tread concrete. Integral nosings shall have braces extended into the concrete fill. Gratings for treads and landings shall conform to NAAMM MBG 531. Grating treads shall have slip-resistant nosings.

2.12 STEEL DOOR FRAMES

Steel door frames built from structural shapes shall be neatly mitered and securely welded at the corners with all welds ground smooth. Jambs shall be provided with 2 by 1/4 by 12 inch bent, adjustable metal anchors spaced not over 2 feet 6 inches on centers. Provision shall be made to stiffen the top member for all spans over 3 feet. Continuous door stops shall be made of 1-1/2 by 5/8 inch bars.

PART 3 EXECUTION

3.1 GENERAL INSTALLATION REQUIREMENTS

All items shall be installed at the locations shown and according to the manufacturer's recommendations. Items listed below require additional procedures as specified.

3.2 ATTACHMENT OF HANDRAILS

Toeboards and brackets shall be installed where indicated. Splices, where required, shall be made at expansion joints. Removable sections shall be installed as indicated.

3.2.1 Installation of Steel Handrails

Installation shall be in pipe sleeves embedded in concrete and filled with molten lead or sulphur with anchorage covered with standard pipe collar pinned to post. Rail ends shall be secured by steel pipe flanges anchored by expansion shields and bolts.

3.3 MOUNTING OF SAFETY CHAINS

Safety chains shall be mounted 3 feet 6 inches and 2 feet above the floor.

3.4 INSTALLATION OF SAFETY NOSINGS

Nosing shall be completely embedded in concrete before the initial set of the concrete occurs and shall finish flush with the top of the concrete surface.

3.5 DOOR FRAMES

Door frames shall be secured to the floor slab by means of angle clips and expansion bolts. Continuous door stops shall be welded to the frame or tap screwed with countersunk screws at no more than 18 inchcenters, assuring in either case full contact with the frame. Any necessary reinforcements shall be made and the frames shall be drilled and tapped as required for hardware.

-- End of Section --

SECTION 07412

NON-STRUCTURAL METAL ROOFING
10/01

PART 1 GENERAL

1.1 REFERENCES

The publications listed below form a part of this specification to the extent referenced. The publications are referred to in the text by basic designation only.

AMERICAN SOCIETY FOR TESTING AND MATERIALS (ASTM)

ASTM A 792/A 792M	(1999) Steel Sheet, 55% Aluminum-Zinc Alloy-Coated by the Hot-Dip Process
ASTM C 518	(1998) Steady-State Heat Flux Measurements and Thermal Transmission Properties by Means of the Heat Flow Meter Apparatus
ASTM C 1289	(1998) Faced Rigid Cellular Polyisocyanurate Thermal Insulation Board
ASTM D 226	(1997a) Asphalt-Saturated Organic Felt Used in Roofing and Waterproofing
ASTM D 522	(1993a) Mandrel Bend Test of Attached Organic Coatings
ASTM D 610	(1995) Evaluating Degree of Rusting on Painted Steel Surfaces
ASTM D 714	(1987; R 1994el) Evaluating Degree of Blistering of Paints
ASTM D 968	(1993) Abrasion Resistance of Organic Coatings by Falling Abrasive
ASTM D 1308	(1987; R 1998) Effect of Household Chemicals on Clear and Pigmented Organic Finishes
ASTM D 1654	(1992) Evaluation of Painted or Coated Specimens Subjected to Corrosive Environments
ASTM D 2244	(1995) Calculation of Color Differences from Instrumentally Measured Color Coordinates
ASTM D 2247	(1999) Testing Water Resistance of Coatings in 100% Relative Humidity
ASTM D 2794	(1993; R 1999el) Resistance of Organic Coatings to the Effects of Rapid

	Deformation (Impact)
ASTM D 3359	(1997) Measuring Adhesion by Tape Test
ASTM D 4214	(1998) Evaluating Degree of Chalking of Exterior Paint Films
ASTM D 4397	(1996) Polyethylene Sheeting for Construction, Industrial, and Agricultural Applications
ASTM D 5894	(1996) Standard Practice for Cyclic Salt Fog/UV Exposure of Painted Metal, (Alternating Exposures in a Fog/Dry Cabinet and a UV/Condensation Cabinet)
ASTM E 84	(2000a) Surface Burning Characteristics of Building Materials
ASTM E 96	(2000) Water Vapor Transmission of Materials

UNDERWRITERS LABORATORIES (UL)

UL 580	(1994; Rev thru Feb 1998) Tests for Uplift Resistance of Roof Assemblies

1.2 SUBMITTALS

Government approval is required for submittals with a "G" designation; submittals not having a "G" designation are for information only. When used, a designation following the "G" designation identifies the office that will review the submittal for the Government. The following shall be submitted in accordance with Section 01330 SUBMITTAL PROCEDURES:

SD-02 Shop Drawings

Metal Roofing; G

a. Drawings consisting of catalog cuts, flashing details, erection drawings, shop coating and finishing specifications, and other data as necessary to clearly describe materials, sizes, layouts, construction details, fasteners, and erection. Drawings shall be provided by the metal roofing manufacturer.

b. Drawings showing the UL 580, Class 90 tested roof system assembly.

SD-04 Samples

Accessories

One sample of each type of flashing, trim, fascia, closure, cap and similar items. Size shall be sufficient to show construction and configuration.

Roof Panels

One piece of each type and finish to be used, 9 inches long, full width.

Fasteners

Two samples of each type to be used with statement regarding intended use. If so requested, random samples of screws, bolts, nuts, and washers as delivered to the jobsite shall be taken in the presence of the Contracting Officer and provided to the Contracting Officer for testing to establish compliance with specified requirements.

Gaskets and Insulating Compounds

Two samples of each type to be used and descriptive data.

Sealant

One sample, approximately 1 pound, and descriptive data.

SD-07 Certificates

Roof Panels; G
Installation; G
Accessories; G

Certificates attesting that the panels and accessories conform to the specified requirements. Certificate for the roof assembly shall certify that the assembly complies with the material and fabrication requirements specified and is suitable for the installation at the indicated design slope. Certified laboratory test reports showing that the sheets to be furnished are produced under a continuing quality control program and that at least 3 representative samples of similar material to that which will be provided on this project have been previously tested and have met the quality standards specified for factory color finish.

Insulation; G

Certificate attesting that the polyisocyanurate insulation furnished for the project contains recovered material, and showing an estimated percent of such recovered material.

Installer; G

Certification of installer.

Warranties; G

At the completion of the project, signed copies of the 5-year Warranty for Non-Structural Metal Roofing System, a sample copy of which is attached to this section, and the 20-year Manufacturer's Material and Weathertightness Warranties.

1.3 GENERAL REQUIREMENTS

The Contractor shall furnish a commercially available roofing system which satisfies the specified design and additional requirements contained herein. The roofing system shall be provided by the Contractor as a

complete system, as tested and approved in accordance with UL 580. Roof panels, components, transitions, accessories, and assemblies shall be supplied by the same roofing system manufacturer.

1.3.1 Non-Structural Metal Roof System

The Non-Structural Metal Roof System covered under this specification shall include the entire roofing system; the metal roof panels, fasteners, connectors, roof securement components, and assemblies tested and approved in accordance with UL 580. The system shall be installed on a substrate specified in Section 05300. In addition, the system shall consist of panel finishes, insulation, vapor retarder, all accessories, components, and trim and all connections with roof panels. This includes roof penetration items such as vents, curbs, exterior gutters and downspouts, eaves, ridge, hip, valley, rake, gable, wall, or other roof system flashings installed and any other components specified within this contract to provide a weathertight roof system; and items specified in other sections of the specifications that are part of the system.

1.3.2 Manufacturer

The non-structural metal roofing system shall be the product of a manufacturer who has been in the practice of manufacturing metal roofs for a period of not less than 3 years and has been involved in at least five projects similar in size and complexity to this project.

1.3.3 Installer

The installer shall be certified by the metal roof manufacturer to have experience in installing at least three projects that are of comparable size, scope and complexity as this project for the particular roof system furnished. The installer may be either employed by the manufacturer or be an independent installer.

1.4 DESIGN LOADS

Non-structural Metal Roof System assemblies shall be tested as defined in UL 580 and shall be capable of resisting the wind uplift pressures shown on the contract drawings or, as a minimum, shall be approved to resist wind uplift pressures of UL 580, Class 90.

1.5 PERFORMANCE REQUIREMENTS

The metal roofing system supplied shall conform to the roof slope, the underlayment, and uplift pressures shown on the contract drawings. The Contractor shall furnish a commercially available roofing system which satisfies all the specified requirements.

1.6 DELIVERY AND STORAGE

Materials shall be delivered to the site in a dry and undamaged condition and stored out of contact with the ground. Materials shall be covered with weather tight coverings and kept dry. Material shall not be covered with plastic where such covering will allow sweating and condensation. Plastic may be used as tenting with air circulation allowed. Storage conditions shall provide good air circulation and protection from surface staining.

1.7 WARRANTIES

The Non-Structural Metal Roofing System shall be warranted as outlined below. Any emergency temporary repairs conducted by the owner shall not negate the warranties.

1.7.1 Contractor's Weathertightness Warranty

The Non-Structural Metal Roofing System shall be warranted by the Contractor on a no penal sum basis for a period of five years against material and workmanship deficiencies; system deterioration caused by exposure to the elements and/or inadequate resistance to specified service design loads, water leaks, and wind uplift damage. The roofing covered under this warranty shall include the entire roofing system, including but not limited to, the roof panels, fasteners, connectors, roof securement components, and assemblies tested and approved in accordance with UL 580. In addition, the system shall consist of panel finishes, slip sheet, insulation, vapor retarder, all accessories, components, and trim and all connections with roof panels. This includes roof penetration items such as vents, curbs, skylights; interior or exterior gutters and downspouts; eaves, ridge, hip, valley, rake, gable, wall, or other roof system flashings installed and any other components specified within this contract to provide a weathertight roof system; and items specified in other sections of the specifications that are part of the roof system. All material and workmanship deficiencies, system deterioration caused by exposure to the elements and/or inadequate resistance to service design loads, water leaks and wind uplift damage shall be repaired as approved by the Contracting Officer. See the attached Contractor's required warranty for issue resolution of warrantable defects. This warranty shall warrant and cover the entire cost of repair or replacement, including all material, labor, and related markups. The Contractor shall supplement this warranty with written warranties from the installer and system manufacturer, which shall be submitted along with Contractor's warranty; however, the Contractor shall be ultimately responsible for this warranty. The Contractor's written warranty shall be as outlined in attached WARRANTY FOR NON-STRUCTURAL METAL ROOF SYSTEM, and shall start upon final acceptance of the facility. It is required that the Contractor provide a separate bond in an amount equal to the installed total roofing system cost in favor of the owner (Government) covering the Contractor's warranty responsibilities effective throughout the 5 year Contractor's warranty period for the entire roofing system as outlined above.

1.7.2 Manufacturer's Material Warranties

The Contractor shall furnish, in writing, the following manufacturer's material warranties which cover all Non-Structural Metal Roofing System components such as roof panels, flashing, accessories, and trim, fabricated from coil material:

a. A manufacturer's 20 year material warranty warranting that the aluminum, zinc-coated steel, aluminum-zinc alloy coated steel or aluminum-coated steel as specified herein will not rupture, fail structurally, or perforate under normal atmospheric conditions at the site. Liability under this warranty shall be limited exclusively to the cost of either repairing or replacing nonconforming, ruptured, perforated, or structurally failed coil material.

b. A manufacturer's 20 year exterior material finish warranty warranting that the factory color finish, under normal atmospheric conditions at the site, will not crack, peel, or delaminate; chalk

in excess of a numerical rating of 8 when measured in accordance with ASTM D 4214; or fade or change colors in excess of 5 NBS units as measured in accordance with ASTM D 2244. Liability under this warranty is exclusively limited to refinishing or replacing the defective coated coil material.

c. A roofing system manufacturer's 20 year system weathertightness warranty.

1.8 COORDINATION MEETING

A coordination meeting shall be held within 45 days after contract award for mutual understanding of the metal roofing system contract requirements. This meeting shall take place at the building site and shall include representatives from the Contractor, the roofing system manufacturer, the roofing supplier, the erector, the designer, and the Contracting Officer. All items required by paragraph SUBMITTALS shall be discussed, including applicable standard manufacturer shop drawings, and the approval process. The Contractor shall coordinate time and arrangements for the meeting.

PART 2 PRODUCTS

2.1 ROOF PANELS

Panels shall be steel and shall have a factory color finish. Length of sheets shall be sufficient to cover the entire length of any unbroken roof slope for slope lengths that do not exceed 30 feet. Sheets longer than 30 feet may be furnished if approved by the Contracting Officer. Width of sheets shall provide nominal 16 inches of coverage in place. Design provisions shall be made for thermal expansion and contraction consistent with the type of system to be used. All sheets shall be either square-cut or miter-cut. The ridge cap shall be installed as recommended by the metal roofing manufacturer. Height of corrugations, ribs, or seams, at overlap of adjacent roof sheets shall be the building manufacturer's standard for the indicated roof slope.

2.1.1 Steel Panels

Aluminum-zinc alloy coated steel conforming to ASTM A 792/A 792M, AZ 55 coating designation. Uncoated roof panels shall be 22 gauge minimum. Panels shall be within 95 percent of the nominal thickness. The hem end of seams shall be closed. Field formed panels shall not be acceptable.

2.2 ACCESSORIES

Accessories shall be compatible with the roofing furnished. Flashing, trim, metal closure strips, caps, and similar metal accessories shall be not less than the minimum thicknesses specified for roof panels. Exposed metal accessories shall be finished to match the panels furnished. Molded closure strips shall be bituminous-saturated fiber, closed-cell or solid-cell synthetic rubber or neoprene, or polyvinyl chloride premolded to match configuration of the panels and shall not absorb or retain water.

2.3 FASTENERS

Fasteners for roof panels shall be zinc-coated steel, aluminum, or nylon capped steel, type and size as recommended by the manufacturer to meet the performance requirements. Fasteners for accessories shall be the manufacturer's standard. Exposed roof fasteners shall be gasketed or have

gasketed washers on the exterior side of the roofing to waterproof the fastener penetration. Washer material shall be compatible with the panels; and gasketed portion of fasteners or washers shall be neoprene or other equally durable elastomeric material approximately 1/8 inch thick.

2.4 FACTORY COLOR FINISH

Panels shall have a factory applied 70 percent polyvinylidene fluoride finish on the exposed side. The exterior finish shall consist of a baked-on topcoat with an appropriate prime coat. Color shall match the color indicated on the drawings. The exterior coating shall be a nominal 1 mil thickness consisting of a topcoat of not less than 0.7 mil dry film thickness and the paint manufacturer's recommended primer of not less than 1.0 mil thickness. The exterior color finish shall meet the test requirements specified below.

2.4.1 Cyclic Salt Fog/UV Test

A sample of the sheets shall withstand a cyclic corrosion test for a minimum of 2016 hours in accordance with ASTM D 5894, including the scribe requirement in the test. Immediately upon removal of the panel from the test, the coating shall receive a rating of not less than 10, no blistering, as determined by ASTM D 714; 10, no rusting, as determined by ASTM D 610; and a rating of 6, over 1/16 to 1/8 inch failure at scribe, as determined by ASTM D 1654.

2.4.2 Formability Test

When subjected to testing in accordance with ASTM D 522 Method B, 1/8 inch diameter mandrel, the coating film shall show no evidence of fracturing to the naked eye.

2.4.3 Accelerated Weathering, Chalking Resistance and Color Change

A sample of the sheets shall be tested in accordance with ASTM D 4587, test condition B. The coating shall withstand the weathering test without cracking, peeling, blistering, loss of adhesion of the protective coating, or corrosion of the base metal. Protective coating with an adhesion rating of less than 4B when tested in accordance with ASTM D 3359, Test Method B, shall be considered as an area indicating loss of adhesion. Following the accelerated weathering test, the coating shall have a chalk rating not less than No. 8 in accordance with ASTM D 4214 test procedures, and the color change shall not exceed 5 CIE or Hunter Lab color difference (delta E) units in accordance with ASTM D 2244.

2.4.4 Humidity Test

When subjected to a humidity cabinet test in accordance with ASTM D 2247 for 1000 hours, a scored panel shall show no signs of blistering, cracking, creepage or corrosion.

2.4.5 Impact Resistance

Factory-painted sheet shall withstand direct and reverse impact in accordance with ASTM D 2794 0.500 inch diameter hemispherical head indenter, equal to 1.5 times the metal thickness in mils, expressed in inch-pounds, with no cracking.

2.4.6 Abrasion Resistance Test

When subjected to the falling sand test in accordance with ASTM D 968, Method A, the coating system shall withstand a minimum of 60 liters of sand before the appearance of the base metal. The term "appearance of base metal" refers to the metallic coating on steel or the aluminum base metal.

2.4.7 Pollution Resistance

Coating shall show no visual effects when covered spot tested in a 10 percent hydrochloric acid solution for 24 hours in accordance with ASTM D 1308.

2.5 UNDERLAYMENTS

2.5.1 Felt Underlayment

Felt underlayment shall be No. 30 felt in accordance with ASTM D 226, Type II.

2.5.2 Rubberized Underlayment

Rubberized underlayment shall be equal to "Ice and Water Shield" as manufactured by Grace Construction Products, "Winterguard" as manufactured by CertainTeed Corporation, or "Weather Watch Ice and Water Barrier" as manufactured by GAF Building Materials Corporation. Provide three foot strip at gutter locations.

2.5.3 Slip Sheet

Slip Sheet shall be 5 pounds per 100 sf rosin sized unsaturated building paper.

2.6 INSULATION

Thermal resistance of insulation shall be not less than the R-values shown on the contract drawings. R-values shall be determined at a mean temperature of 75 degrees F in accordance with ASTM C 518. Insulation shall be a standard product with the insulation manufacturer, factory marked or identified with insulation manufacturer's name or trademark and R-value. Identification shall be on individual pieces or individual packages. Insulation, including facings, shall have a flame spread not in excess of 50 and a smoke developed rating not in excess of 170 when tested in accordance with ASTM E 84. The stated R-value of the insulation shall be certified by an independent Registered Professional Engineer if tests are conducted in the insulation manufacturer's laboratory. Contractor shall comply with EPA requirements in accordance with Section 01670 RECYCLED / RECOVERED MATERIALS.

2.6.1 Rigid Board Insulation for Use Above a Roof Deck

2.6.1.1 Polyisocyanurate

Polyisocyanurate insulation shall conform to ASTM C 1289, Type I, Class 2 (having a minimum recovered material content of 9 percent by weight of core material in the polyisocyanurate portion). For impermeable faced polyisocyanurate (Ex: aluminum foil) the maximum design R-value per 1 inch of insulation used shall be 7.2.

2.7 SEALANT

Sealant shall be an elastomeric type containing no oil or asphalt. Exposed sealant shall be colored to match the applicable building color and shall cure to a rubberlike consistency. Sealant placed in the roof panel standing seam ribs shall be provided in accordance with the manufacturer's recommendations.

2.8 GASKETS AND INSULATING COMPOUNDS

Gaskets and insulating compounds shall be nonabsorptive and suitable for insulating contact points of incompatible materials. Insulating compounds shall be nonrunning after drying.

2.9 VAPOR RETARDER

2.9.1 Vapor Retarders as Integral Facing

Insulation facing shall have a permeability of 0.02 perm or less when tested in accordance with ASTM E 96. Facing shall be reinforced polypropylene kraft laminate (PSK). Facings and finishes shall be factory applied.

2.9.2 Vapor Retarders Separate from Insulation

Vapor retarder material shall be polyethylene sheeting conforming to ASTM D 4397. A single ply of 10 mil polyethylene sheet; or, at the Contractor's option, a double ply of 6 mil polyethylene sheet shall be used. A fully compatible polyethylene tape which has equal or better water vapor control characteristics than the vapor retarder material shall be provided. A cloth industrial duct tape in a utility grade shall also be provided to use as needed to protect the vapor retarder from puncturing.

PART 3 EXECUTION

3.1 INSTALLATION

Installation shall be in accordance with the manufacturer's erection instructions and drawings. Dissimilar materials which are not compatible when contacting each other shall be insulated by means of gaskets or insulating compounds. Improper or mislocated drill holes shall be plugged with an oversize screw fastener and gasketed washer; however, sheets with an excess of such holes or with such holes in critical locations shall not be used. Exposed surfaces and edges shall be kept clean and free from sealant, metal cuttings, hazardous burrs, and other foreign material. Stained, discolored, or damaged sheets shall be removed from the site.

3.1.1 Roofing

Side laps shall be laid away from the prevailing winds. Side and end lap distances, joint sealing, and fastening and spacing of fasteners shall be in accordance with manufacturer's standard practice. Spacing of exposed fasteners shall present an orderly appearance. Side laps and end laps of roof panels and joints at accessories shall be sealed. Fasteners shall be driven normal to the surface. Method of applying joint sealant shall conform to the manufacturer's recommendation to achieve a complete weathertight installation. Accessories shall be fastened into substrate, except as otherwise approved. Closure strips shall be provided as indicated and where necessary to provide weathertight construction.

3.1.2 Field Forming of Roof Panels for Unique Areas

When roofing panels are formed from factory-color-finished steel coils at the project site, the same care and quality control measures that are taken in shop forming of roofing panels shall be observed. Rollformer shall be operated by the metal roofing manufacturer's approved installer. In cold weather conditions, preheating of the steel coils to be field formed shall be performed as necessary just prior to the rolling operations.

3.1.3 Underlayment

Underlayment types shall be installed where shown on the drawings; they shall be installed directly over the substrate. If a roof panel rests directly on the underlayments, a slip sheet shall be installed as a top layer, beneath the metal roofing panels, to prevent adhesion. All underlayments shall be installed so that successive strips overlap the next lower strip in shingle fashion. Underlayments shall be installed in accordance with the manufacturer's written instructions. The underlayments shall ensure that any water that penetrates below the metal roofing panels will drain outside of the building envelope.

3.2 INSULATION INSTALLATION

Insulation shall be installed as indicated and in accordance with manufacturer's instructions. Insulation shall be continuous over entire roof surface. Where expansion joints, terminations, and other connections are made, the cavity shall be filled with batt insulation and vapor retarder providing equivalent R-Value and perm rating as remaining insulation.

3.2.1 Board Insulation in Warm Climates

Rigid or semirigid board insulation shall be laid in close contact. If more than one layer of insulation is required, joints in the second layer shall be offset from joints in the first layer. Rigid insulation shall be attached to the metal roof deck with bearing plates and fasteners, as recommended by the insulation manufacturer, so that the insulation joints are held tight against each other, with no less than 1 fastener and bearing plates per 4 square feet of insulation. Layout and joint pattern of insulation and fasteners shall be indicated on the shop drawings.

3.3 VAPOR RETARDER INSTALLATION

3.3.1 Polyethylene Vapor Retarder

The polyethylene vapor retarder membrane shall be installed over the entire surface. A fully compatible polyethylene tape shall be used to seal the edges of the sheets to provide a vapor tight membrane. Sheet edges shall be lapped not less than 6 inches. Sufficient material shall be provided to avoid inducing stresses in the sheets due to stretching or binding. All tears or punctures that are visible in the finished surface at any time during the construction process shall be sealed with polyethylene tape.

-- End of Section --

SECTION 07600

SHEET METALWORK, GENERAL
11/01

PART 1 GENERAL

1.1 REFERENCES

The publications listed below form a part of this specification to the extent referenced. The publications are referred to in the text by basic designation only.

AMERICAN SOCIETY FOR TESTING AND MATERIALS (ASTM)

ASTM A 167	(1999) Stainless and Heat-Resisting Chromium-Nickel Steel Plate, Sheet, and Strip
ASTM B 209	(2000) Aluminum and Aluminum-Alloy Sheet and Plate
ASTM B 221	(2000) Aluminum and Aluminum-Alloy Extruded Bars, Rods, Wire, Profiles, and Tubes
ASTM B 32	(1996) Solder Metal
ASTM B 370	(1998) Copper Sheet and Strip for Building Construction
ASTM D 226	(1997a) Asphalt-Saturated Organic Felt Used in Roofing and Waterproofing
ASTM D 2822	(1991; R 1997el) Asphalt Roof Cement
ASTM D 4586	(1993; R 1999) Asphalt Roof Cement, Asbestos Free
ASTM D 543	(1995) Evaluating the Resistance of Plastics to Chemical Reagents
ASTM D 822	(1996) Conducting Tests on Paint and Related Coatings and Materials Using Filtered Open-Flame Carbon-Arc Exposure Apparatus
ASTM D 828	(1997) Tensile Properties of Paper and Paperboard Using Constant-Rate-of-Elongation-Apparatus
ASTM E 96	(2000) Water Vapor Transmission of Materials

INSECT SCREENING WEAVERS ASSOCIATION (ISWA)

ISWA IWS 089	(1990) Recommended Standards and

Specifications for Insect Wire Screening (Wire Fabric)

SHEET METAL & AIR CONDITIONING CONTRACTORS' NATIONAL ASSOCIATION (SMACNA)

SMACNA Arch. Manual (1993; Errata; Addenda Oct 1997) Architectural Sheet Metal Manual

1.2 GENERAL REQUIREMENTS

Sheet metalwork shall be accomplished to form weathertight construction without waves, warps, buckles, fastening stresses or distortion, and shall allow for expansion and contraction. Cutting, fitting, drilling, and other operations in connection with sheet metal required to accommodate the work of other trades shall be performed by sheet metal mechanics. Installation of sheet metal items used in conjunction with roofing shall be coordinated with roofing work to permit continuous roofing operations. Sheet metalwork pertaining to heating, ventilating, and air conditioning is specified in Section [_____].

1.3 SUBMITTALS

Government approval is required for submittals with a "G" designation; submittals not having a "G" designation are for information only. When used, a designation following the "G" designation identifies the office that will review the submittal for the Government. The following shall be submitted in accordance with Section 01330 SUBMITTAL PROCEDURES:

SD-02 Shop Drawings

Materials; G

Drawings of sheet metal items showing weights, gauges or thicknesses; types of materials; expansion-joint spacing; fabrication details; and installation procedures.

1.4 DELIVERY, STORAGE, AND HANDLING

Materials shall be adequately packaged and protected during shipment and shall be inspected for damage, dampness, and wet-storage stains upon delivery to the jobsite. Materials shall be clearly labeled as to type and manufacturer. Sheet metal items shall be carefully handled to avoid damage. Materials shall be stored in dry, ventilated areas until immediately before installation.

PART 2 PRODUCTS

2.1 MATERIALS

Lead, lead-coated metal, and galvanized steel shall not be used. Any metal listed by SMACNA Arch. Manual for a particular item may be used, unless otherwise specified or indicated. Materials shall conform to the requirements specified below and to the thicknesses and configurations established in SMACNA Arch. Manual. Different items need not be of the same metal, except that if copper is selected for any exposed item, all exposed items shall be copper.

2.1.1 Accessories

Accessories and other items essential to complete the sheet metal installation, though not specifically indicated or specified, shall be provided.

2.1.2 Aluminum Extrusions

ASTM B 221, Alloy 6063, Temper T5.

2.1.3 Bituminous Cement

Type I asphalt cement conforming to ASTM D 2822 or ASTM D 4586.

2.1.4 Sealant

Unless otherwise specified, sealant shall be an elastomeric weather resistant sealant as specified in Section 07900 JOINT SEALING.

2.1.5 Fasteners

Fasteners shall be compatible with the fastened material and shall be the type best suited for the application.

2.1.6 Felt

ASTM D 226, Type I.

2.1.7 Aluminum Alloy Sheet and Plate

ASTM B 209, anodized clear, form, alloy, and temper appropriate for use.

2.1.8 Copper

ASTM B 370, Temper H 00.

2.1.9 Stainless Steel

ASTM A 167, Type 302 or 304; fully annealed, dead soft temper.

2.1.10 Solder

ASTM B 32, 95-5 tin-antimony.

2.1.11 Through-Wall Flashing

a. Nonreinforced, waterproof, impermeable extruded elastomeric single ply sheeting not less than 30 mils thick.

b. Other through-wall flashing material may be used provided the following performance criteria are met.

(1) No cracking or flaking when bent 180 degrees over a 1/32 inch mandrel and rebent at the same point over the same mandrel in an opposite direction at 32 degrees F.

(2) Water vapor permeability not more than 2 perms when tested in accordance with ASTM E 96.

(3) Minimum breaking strength of 90 pounds per inch width in the

weakest direction when tested in accordance with ASTM D 828.

(4) No visible deterioration after being subjected to a 400-hour direct weathering test in accordance with ASTM D 822.

(5) No shrinkage in length or width and less than 5 percent loss of breaking strength after a 10-day immersion, per ASTM D 543, in 5 percent (by weight) solutions, respectively, of sulfuric acid, hydrochloric acid, sodium hydroxide or saturated lime (calcium hydroxide).

2.1.12 Louver Screen

Type I commercial bronze insect screening conforming to ISWA IWS 089.

PART 3 EXECUTION

3.1 GENERAL REQUIREMENTS

Gutters and downspouts shall be designed and fabricated in conformance with SMACNA Arch. Manual; louvers shall be fabricated in conformance with SMACNA Arch. Manual and as indicated. Unless otherwise specified or indicated, exposed edges shall be folded back to form a 1/2 inch hem on the concealed side, and bottom edges of exposed vertical surfaces shall be angled to form drips. Bituminous cement shall not be placed in contact with roofing membranes other than built-up roofing.

3.2 PROTECTION OF ALUMINUM

Aluminum shall not be used where it will be in contact with copper or where it will contact water which flows over copper surfaces. Aluminum that will be in contact with wet or pressure-treated wood, mortar, concrete, masonry, or ferrous metals shall be protected against galvanic or corrosive action by one of the following methods:

3.2.1 Paint

Aluminum surfaces shall be solvent cleaned and given one coat of zinc-molybdate primer and one coat of aluminum paint as specified in Section 09900 PAINTING, GENERAL.

3.2.2 Nonabsorptive Tape or Gasket

Nonabsorptive tape or gasket shall be placed between the adjoining surfaces and cemented to the aluminum surface using a cement compatible with aluminum.

3.3 CONNECTIONS AND JOINTING

3.3.1 Soldering

Soldering shall apply to copper, and stainless steel items. Edges of sheet metal shall be pretinned before soldering is begun. Soldering shall be done slowly with well heated soldering irons so as to thoroughly heat the seams and completely sweat the solder through the full width of the seam. Edges of stainless steel to be pretinned shall be treated with soldering acid flux. Soldering shall follow immediately after application of the flux. Upon completion of soldering, the acid flux residue shall be thoroughly cleaned from the sheet metal with a water solution of washing

soda and rinsed with clean water.

3.3.2 Riveting

Joints in aluminum sheets 0.040 inch or less in thickness shall be mechanically made.

3.3.3 Seaming

Flat-lock and soldered-lap seams shall finish not less than 1 inch wide. Unsoldered plain-lap seams shall lap not less than 3 inches unless otherwise specified. Flat seams shall be made in the direction of the flow.

3.4 CLEATS

A continuous cleat shall be provided where indicated or specified to secure loose edges of the sheet metalwork. Butt joints of cleats shall be spaced approximately 1/8 inch apart. The cleat shall be fastened to supporting wood construction with nails evenly spaced not over 12 inches on centers. Where the fastening is to be made to concrete or masonry, screws shall be used and shall be driven in expansion shields set in concrete or masonry.

3.5 GUTTERS AND DOWNSPOUTS

Gutters and downspouts shall be installed as indicated. Gutters shall be supported by continuous cleats. Downspouts shall be rigidly attached to the building. Supports for downspouts shall be spaced according to manufacturer's recommendations.

3.6 FLASHINGS

Flashings shall be installed at locations indicated and as specified below. Sealing shall be according to the flashing manufacturer's recommendations. Flashings shall be installed at intersections of roof with vertical surfaces and at projections through roof, except that flashing for heating and plumbing, including piping, roof, and floor drains, and for electrical conduit projections through roof or walls are specified in other sections. Except as otherwise indicated, counter flashings shall be provided over base flashings. Perforations in flashings made by masonry anchors shall be covered up by an application of bituminous plastic cement at the perforation. Flashing shall be installed on top of joint reinforcement. Flashing shall be formed to direct water to the outside of the system.

3.6.1 Base Flashing

Metal base flashing shall be coordinated with roofing work. Metal base flashing shall be set in plastic bituminous cement over the roofing membrane, nailed to nailing strip, and secured in place on the roof side with nails spaced not more than 3 inches on centers.

3.6.2 Counter Flashings

Except as otherwise indicated, counter flashings shall be provided over base flashings. Counter flashing shall be installed as shown in SMACNA Arch. Manual. Counter flashing shall be factory formed to provide spring action against the base flashing.

3.6.3 Through-Wall Flashing

Through-wall flashing includes sill, lintel, and spandrel flashing. The flashing shall be laid with a layer of mortar above and below the flashing so that the total thickness of the two layers of the mortar and flashing are the same thickness as the regular mortar joints. Flashing shall be sealed to concrete backup wall. Joints in flashing shall be lapped and sealed. Flashing shall be one piece for lintels and sills.

3.6.3.1 Lintel Flashing

Lintel flashing shall extend the full length of lintel. Flashing shall be sealed to the wall one masonry course above the lintels and shall be bent down over the vertical leg of the outer steel lintel angle not less than 2 inches, or shall be applied over top of masonry and precast concrete lintels. Bedjoints of lintels at control joints shall be underlaid with sheet metal bond breaker.

3.6.3.2 Sill Flashing

Sill flashing shall extend the full width of the sill and not less than 4 inches beyond ends of sill except at control joint where the flashing shall be terminated at the end of the sill.

3.7 FASCIA

Fascia shall be fabricated and installed as indicated and in accordance with SMACNA Arch. Manual.

3.8 INSTALLATION OF LOUVERS

Louvers shall be rigidly attached to the supporting construction. The installation shall be rain-tight. Louver screen shall be installed as indicated.

3.9 CONTRACTOR QUALITY CONTROL

The Contractor shall establish and maintain a quality control procedure for sheet metal used in conjunction with roofing to assure compliance of the installed sheet metalwork with the contract requirements. Any work found not to be in compliance with the contract shall be promptly removed and replaced or corrected in an approved manner. Quality control shall include, but not be limited to, the following:

a. Observation of environmental conditions; number and skill level of sheet metal workers; condition of substrate.

b. Verification of compliance of materials before, during, and after installation.

c. Inspection of sheet metalwork for proper size and thickness, fastening and joining, and proper installation.

The actual quality control observations and inspections shall be documented and a copy of the documentation furnished to the Contracting Officer at the end of each day.

-- End of Section --

SECTION 13100A

LIGHTNING PROTECTION SYSTEM
07/01

PART 1 GENERAL

1.1 REFERENCES

The publications listed below form a part of this specification to the extent referenced. The publications are referred to in the text by basic designation only.

NATIONAL FIRE PROTECTION ASSOCIATION (NFPA)

NFPA 70	(1999) National Electrical Code
NFPA 780	(1997) Installation of Lightning Protection Systems

UNDERWRITERS LABORATORIES (UL)

UL 96	(1994; Rev thru Jan 2000) Lightning Protection Components
UL 96A	(1994; Rev thr Jul 1998) Installation Requirements for Lightning Protection Systems
UL 467	(1993; Rev thru Apr 1999) Grounding and Bonding Equipment
UL Elec Const Dir	(1999) Electrical Construction EquipmentDirectory

1.2 GENERAL REQUIREMENTS

1.2.1 Verification of Dimensions

The Contractor shall become familiar with all details of the work, verify all dimensions in the field, and shall advise the Contracting Officer of any discrepancy before performing the work. No departures shall be made without the prior approval of the Contracting Officer.

1.2.2 System Requirements

The system furnished under this specification shall consist of the standard products of a manufacturer regularly engaged in the production of lightning protection systems and shall be the manufacturer's latest UL approved design. The lightning protection system shall conform to NFPA 70 and NFPA 780, UL 96 and UL 96A, except where requirements in excess thereof are specified herein.

1.3 SUBMITTALS

Government approval is required for submittals with a "G" designation; submittals not having a "G" designation are for information only. When

used, a designation following the "G" designation identifies the office that will review the submittal for the Government. The following shall be submitted in accordance with Section 01330 SUBMITTAL PROCEDURES:

SD-02 Shop Drawings

Drawings

Detail drawings consisting of a complete list of material, including manufacturer's descriptive and technical literature, catalog cuts, drawings, and installation instructions. Detail drawings shall demonstrate that the system has been coordinated and will function as a unit. Drawings shall show proposed layout and mounting and relationship to other parts of the work.

SD-07 Certificates

Materials

Where material or equipment is specified to comply with requirements of UL, proof of such compliance. The label of or listing in UL Elec Const Dir will be acceptable evidence. In lieu of the label or listing, a written certificate from an approved nationally recognized testing organization equipped to perform such services, stating that the items have been tested and conform to the requirements and testing methods of Underwriters Laboratories may be submitted. A letter of findings shall be submitted certifying UL inspection of lightning protection systems provided.

PART 2 PRODUCTS

2.1 MATERIALS

2.1.1 General Requirements

No combination of materials shall be used that form an electrolytic couple of such nature that corrosion is accelerated in the presence of moisture unless moisture is permanently excluded from the junction of such metals. Where unusual conditions exist which would cause corrosion of conductors, conductors with protective coatings or oversize conductors shall be used. Where a mechanical hazard is involved, the conductor size shall be increased to compensate for the hazard or the conductors shall be protected by covering them with molding or tubing made of wood or nonmagnetic material. When metallic conduit or tubing is used, the conductor shall be electrically connected at the upper and lower ends.

2.1.2 Main and Secondary Conductors

Conductors shall be in accordance with NFPA 780 and UL 96 for Class I, Class II, or Class II modified materials as applicable.

2.1.2.1 Copper

Counterpoise shall be copper conductors not smaller than No. 1/0 AWG.

2.1.2.2 Aluminum

Aluminum conductors shall not be allowed.

2.1.3 Air Terminals

Terminals shall be in accordance with UL 96 and NFPA 780. Air terminals more than 24 inches in length shall be supported by a suitable brace, with guides not less than one-half the height of the terminal.

2.1.4 Ground Rods

Rods shall be made of copper-clad steel and shall conform to UL 467. Ground rods shall be not less than 3/4 inch in diameter and 10 feet in length.

2.1.5 Connectors

Clamp-type connectors for splicing conductors shall conform to UL 96, class as applicable, and, Class 2, style and size as required for the installation. Clamp-type connectors shall only be used for the connection of the roof conductor to the air terminal. All other connections, bonds, and splices shall be done by exothermic welds or by high compression fittings. The exothermic welds and high compression fittings shall be listed for the purpose. The high compression fittings shall be the type which require a hydraulically operated mechanism to apply a minimum of 10,000 psi.

2.1.6 Lightning Protection Components

Lightning protection components, such as bonding plates, air terminal supports, clips, and fasteners shall conform to UL 96, classes as applicable.

PART 3 EXECUTION

3.1 INTEGRAL SYSTEM

3.1.1 General Requirements

The lightning protection system shall consist of air terminals, roof conductors, down conductors, ground connections, and grounds, electrically interconnected to form the shortest distance to ground. All conductors on the structures shall be exposed except where conductors are in protective sleeves exposed on the outside walls. Secondary conductors shall interconnect with grounded metallic parts within the building. Interconnections made within side-flash distances shall be at or above the level of the grounded metallic parts.

3.1.1.1 Air Terminals

Air terminal design and support shall be in accordance with NFPA 780. Terminals shall be rigidly connected to, and made electrically continuous with, roof conductors by means of pressure connectors or crimped joints of T-shaped malleable metal and connected to the air terminal by a dowel or threaded fitting. Air terminals at the ends of the structure shall be set not more than 2 feet from edges and corners of roofs. Spacing of air terminals 2 feet in height around the perimeter of building shall not exceed 30 feet. Air terminals shall be secured against overturning either by attachment to the object to be protected or by means of a substantial tripod or other braces permanently and rigidly attached to the building or structure. Metal projections shall be bonded to the lightning conductor

through a metal conductor of the same unit weight per length as the main conductor.

3.1.1.2 Roof Conductors

Roof conductors shall be connected directly to the roof or ridge roll. Sharp bends or turns in conductors shall be avoided. Necessary turns shall have a radius of not less than 8 inches. Conductors shall preserve a downward or horizontal course and shall be rigidly fastened every 3 feet along the roof. All connections shall be electrically continuous. Roof conductors shall be coursed along the contours of flat roofs, ridges, and edges; and where necessary, over flat surfaces, in such a way as to join each air terminal to all the rest. Roof conductors surrounding flat roofs shall be connected to form a closed loop.

3.1.1.3 Down Conductors

Down conductors shall be electrically continuous from air terminals and roof conductors to grounding electrodes. Down conductors shall be coursed through PVC Schedule 80 conduit on the interior of the building, with consideration given to the location of ground connections and air terminals. Each building or structure shall have not less than two down conductors located as widely separated as practicable, at diagonally opposite corners. Down conductors shall be equally and symmetrically spaced about the perimeter of the structure.

3.1.1.4 Interconnection of Metallic Parts

Metal building supports, walls, doors and windows shall be connected directly to the grounds or down conductors using not smaller than No. 6 copper conductor. Conductors placed where there is probability of unusual wear, mechanical injury, or corrosion shall be of greater electrical capacity than would normally be used, or shall be protected. The ground connection to metal doors and windows shall be by means of mechanical ties under pressure, or equivalent.

3.1.1.5 Ground Connections

Ground connections comprising continuations of down conductors from the structure to the grounding electrode shall securely connect the down conductor and ground in a manner to ensure electrical continuity between the two. All connections shall be of the clamp type. There shall be a ground connection for each down conductor. Metal water pipes and other large underground metallic objects shall be bonded together with all grounding mediums. Ground connections shall be protected from mechanical injury. In making ground connections, advantage shall be taken of all permanently moist places where practicable, although such places shall be avoided if the area is wet with waste water that contains chemical substances, especially those corrosive to metal.

3.1.1.6 Grounding Electrodes

A grounding electrode shall be provided for each down conductor located as shown. A driven ground shall extend into the earth for a distance of not less than 10 feet. Ground rods shall be set not less than 3 feet, nor more than 8 feet, from the structure foundation. The complete installation shall have a total resistance to ground of not more than 10 ohms. Ground rods shall be tested individually prior to connection to the system and the system as a whole shall be tested not less than 48 hours after rainfall.

When the resistance of the complete installation exceeds the specified value or two ground rods individually exceed 25 ohms, the Contracting Officer shall be notified immediately. A counterpoise shall be of No. 1/0 copper cable having suitable resistance to corrosion and shall be laid around the perimeter of the structure in a trench not less than 2 feet deep at a distance not less than 3 feet nor more than 8 feet from the nearest point of the structure. All connections between ground connectors and grounds or counterpoise, and between counterpoise and grounds shall be electrically continuous.

3.2 INTERCONNECTION OF METAL BODIES

Metal bodies of conductance shall be protected if not within the zone of protection of an air terminal. Metal bodies of conductance having an area of 400 square inches or greater or a volume of 1000 cubic inches or greater shall be bonded to the lightning protection system using main size conductors and a bonding plate having a surface contact area of not less than 3 square inches.Provisions shall be made to guard against the corrosive effect of bonding dissimilar metals. Metal bodies of inductance shall be bonded at their closest point to the lightning protection system using secondary bonding conductors and fittings. A metal body that exceeds 5 feet in any dimension, that is situated wholly within a building, and that does not at any point come within 6 feet of a lightning conductor or metal connected thereto shall be independently grounded.

3.3 INSPECTION

The lightning protection system will be inspected by the Contracting Officer to determine conformance with the requirements of this specification. No part of the system shall be concealed until so authorized by the Contracting Officer.

-- End of Section --

SECTION 13120A

PRECAST CONCRETE BUILDING

PART 1 GENERAL

1.1 SUMMARY

Contractor shall furnish precast concrete buildings as indicated. Buildings shall be field erected by manufacturer. Building shall be provided by manufacturer with all necessary openings as specified by Contractor in conformance with manufacturer's structural requirements.

1.2 DESIGN REQUIREMENTS

a. Dimensions

1. Pump House Building

Exterior: 20 feet x 40 feet x 12 feet 4 inches

Interior: 19 feet 4 inches x 39 feet 4 inches x 12 feet minimum

2. Electrical Room Building

Exterior: 20 feet x 12 feet x 1 feet 4 inches

Interior: 19 feet 4 inches x 11 feet 4 inches x 14 feet minimum

b. Design Loads

1. Seismic load performance category "C", Exposure Group

2. Standard Live Roof Load - 20 PSF

3. Standard Floor Load - 250 PSF

4. Standard Wind Loading - 95 MPH

c. Roof: Roof panel shall slope 8" in the long direction of the building from peak to edge. The roof shall extend 4" beyond the wall panel on each side and have a turndown design which extends 1/2" below the top edge of the wall panels to prevent water migration into the building along top of wall panels. Roof shall also have an integral architectural ribbed edge.

d. Keyway Roof Joints: Grout in keyways shall be polymer concrete placed after coating keyways with a methyl methacrylate resin and isocyanate resin. Top of keyway must be coated with primer followed by one coat of a polymeric joint sealant followed by a fiberglass resin fabric followed by a second coat of polymeric joint sealant.

1.3 SUBMITTALS

Building engineering calculations that are designed and sealed by a professional engineer shall be submitted for approval.

PART 2 PRODUCTS

2.1 MATERIALS

a. Concrete: Steel-reinforced, 5000 PSI minimum 28-day compressive strength, air-entrained ASTM C260.

b. Reinforcing Steel: ASTM A615, grade 60 unless otherwise indicated.

c. Post-tensioning Strand: Roof and floor (if required) shall be post-tensioned in field after grout keyway is filled and has cured to required PSI strength. Post-tensioning cable shall be 41K polystrand CP50, .50", 270 KSI, 7-wire strand, greased plastic sheath, ASTM A416. Tendons shall be greased and enclosed within a sheath. There will be a minimum of three post-tensioning cables connecting roofs and floors together to provide watertight joint.

d. Caulking: All joints between panels shall be caulked on the exterior and interior surface of the joints. Caulking shall be SIKAFLEX-IA elastic sealant or equal. Exterior caulk joint to be 3/8" x 3/8" square so that sides of joint are parallel for correct caulk adhesion. Back of joint to be taped with bond breaking tape to ensure adhesion of caulk to parallel sides of joint and not the back.

e. Panel Connections: All panels shall be securely fastened together with 1/4" thick steel brackets. Steel is to be of structural quality, hot-rolled carbon complying with ASTM A283, Grade C and hot dipped galvanized after fabrication. All fasteners to be 1/2" diameter bolts complying with ASTM A307 for low-carbon steel bolts. Cast-in anchors used for panel connections to be Dayton-Superior #F-63, or equal. All inserts for corner connections must be bolted directly to form before casting panels. No floating-in of connection inserts shall be allowed. Wall panels shall be connected to floor slab with 4' expansion anchors by manufacturer.

2.2 ACCESSORIES

a. Doors and Frames: Shall comply with Steel Door Institute "Recommended Specifications for Standard Steel Doors and Frames" (SDI-100), and as herein specified. The buildings shall be equipped with double 3'-O" x 6'-8" x 1-3/4", 18-gauge galvanized/insulated CECO Imperial right hand reverse metal doors with 16-gauge galvanized frames. Doors and frames shall be galvanized and painted one coat of rust inhibitive primer and one finish coat of enamel paint, YORKTOWN BROWN.

b. Door Hardware:

1. Handle: Lindstrom stainless steel, 8-1/2" x 2" or equal.

2. Hinges: Hager 920P (primed with non-removable hinge pins), or equal, 3 per door.

3. Lock Set: EASY-SET 200KD (Bigon #26 finish), or equal.

4. Surface Bolt, Upper: CECO 4031-US2C (Cadmium plated finish), or equal.

5. Surface Bolt, Lower: CECO 4032-US2C (Cadmium plated finish), or equal.

6. Astragal: A4441/68R, or equal.

7. Threshold: CECO #897 V raised interior, extruded aluminum threshold with neoprene seal, or equal.

8. Door Holder: Yale H94OV26D, or equal, overhead slide type surface mounted door holder with safety release.

9. Drip Cap: National Guard 15D72, or equal.

10. Door Stop: Ives 445B26D (Inactive leaf only), or equal.

c. Roof Hatches: Provide four roof hatches in the roof of the Pump House Building. Roof hatches shall be five feet square (inside dimension). Center roof hatches over pump locations. Coordinate roof hatch requirements with pump requirements prior to commencing work.

2.3 FINISHES

a. Interior of Building: Smooth steel form finish on all interior panel surfaces.

b. Exterior of Building:

1. Architectural precast concrete brick finish: Finish must be imprinted in top face of panel while in form using an open grid impression tool. Finished brick size shall be 2-3/8" x 7-5/7" with vertical steel float or light broom finish. Joints between each brick must be 3/8" wide x 3/8" deep. Back of joint shall be concave to simulate a hand tooled joint. Each brick face shall be coated with the following acrylic concrete stain: 1) Cementrate by FOSROC or equal; or, 2) Canyon Tone stain by United Coatings or equal. Stain color shall be brick red to match existing adjacent buildings. Submit color for review prior to fabrication. Stain shall be applied per manufacturer's recommendation. Joints shall be kept substantially free of stain to maintain a gray concrete color.

PART 3 EXECUTION

3.1 SITE PREPARATION - FIELD ASSEMBLIED ON CAST-IN-PLACE FLOOR

Slab to be level within 1/8" in both directions and capable of supporting loads imposed by the structure.

3.2 ACCESS

Contractor shall provide access to the site for fabrication and installation of each building. Coordinate site access requirements with building fabricator prior to commencing work.

-- End of Section --

SECTION 15050

BASIC MECHANICAL MATERIALS AND METHODS
09/01

PART 1 GENERAL

1.1 REFERENCES

The publications listed below form a part of this specification to the extent referenced. The publications are referred to in the text by the basic designation only.

AMERICAN SOCIETY FOR TESTING AND MATERIALS (ASTM)

ASTM B 117	(1997) Operating Salt Spray (Fog) Apparatus

INSTITUTE OF ELECTRICAL AND ELECTRONICS ENGINEERS (IEEE)

ANSI C2	(1997) National Electrical Safety Code

NATIONAL ELECTRICAL MANUFACTURERS ASSOCIATION (NEMA)

NEMA MG 1	(1998; Errata 1999) Motors and Generators
NEMA MG 10	(1994) Energy Management Guide for Selection and Use of Fixed Frequency Medium AC Squirrel-Cage Polyphase Induction Motors
NEMA MG 11	(1977; R 1992) Energy Management Guide of Selection and Use of Single-Phase Motors

NATIONAL FIRE PROTECTION ASSOCIATION (NFPA)

NFPA 70	(1999) National Electrical Code

1.2 RELATED REQUIREMENTS

This section applies to all sections of Division 15, "Mechanical" of this project specification, unless specified otherwise in the individual section.

1.3 QUALITY ASSURANCE

1.3.1 Material and Equipment Qualifications

Provide materials and equipment that are standard products of manufacturers regularly engaged in the manufacture of such products, which are of a similar material, design and workmanship. Standard products shall have been in satisfactory commercial or industrial use for 2 years prior to bid opening. The 2-year use shall include applications of equipment and materials under similar circumstances and of similar size. The product shall have been for sale on the commercial market through advertisements, manufacturers' catalogs, or brochures during the 2 year period.

1.3.2 Alternative Qualifications

Products having less than a two-year field service record will be acceptable if a certified record of satisfactory field operation for not less than 6000 hours, exclusive of the manufacturer's factory or laboratory tests, can be shown.

1.3.3 Service Support

The equipment items shall be supported by service organizations. Submit a certified list of qualified permanent service organizations for support of the equipment which includes their addresses and qualifications. These service organizations shall be reasonably convenient to the equipment installation and able to render satisfactory service to the equipment on a regular and emergency basis during the warranty period of the contract.

1.3.4 Manufacturer's Nameplate

Each item of equipment shall have a nameplate bearing the manufacturer's name, address, model number, and serial number securely affixed in a conspicuous place; the nameplate of the distributing agent will not be acceptable.

1.3.5 Modification of References

In each of the publications referred to herein, consider the advisory provisions to be mandatory, as though the word, "shall" had been substituted for "should" wherever it appears. Interpret references in these publications to the "authority having jurisdiction", or words of similar meaning, to mean the Contracting Officer.

1.3.5.1 Definitions

For the International Code Council (ICC) Codes referenced in the contract documents, advisory provisions shall be considered mandatory, the word "should" shall be interpreted as "shall." Reference to the "code official" shall be interpreted to mean the "Contracting Officer." For Navy owned property, references to the "owner" shall be interpreted to mean the "Contracting Officer." For leased facilities, references to the "owner" shall be interpreted to mean the "lessor." References to the "permit holder" shall be interpreted to mean the "Contractor."

1.3.5.2 Administrative Interpretations

For ICC Codes referenced in the contract documents, the provisions of Chapter 1, "Administrator," do not apply. These administrative requirements are covered by the applicable Federal Acquisition Regulations (FAR) included in this contract and by the authority granted to the Officer in Charge of Construction to administer the construction of this project. References in the ICC Codes to sections of Chapter 1, shall be applied appropriately by the Contracting Officer as authorized by his administrative cognizance and the FAR.

1.4 DELIVERY, STORAGE, AND HANDLING

Handle, store, and protect equipment and materials to prevent damage before and during installation in accordance with the manufacturer's recommendations, and as approved by the Contracting Officer. Replace damaged or defective items.

1.5 ELECTRICAL INSTALLATION REQUIREMENTS

Electrical installations shall conform to ANSI C2, NFPA 70, and requirements specified herein.

1.5.1 New Work

Provide electrical components of mechanical equipment, such as motors, motor starters (except starters/controllers which are indicated as part of a motor control center), control or push-button stations, float or pressure switches, solenoid valves, integral disconnects, and other devices functioning to control mechanical equipment, as well as control wiring and conduit for circuits rated 100 volts or less, to conform with the requirements of the section covering the mechanical equipment. Extended voltage range motors shall not be permitted. The interconnecting power wiring and conduit, control wiring rated 120 volts (nominal) and conduit, the motor control equipment forming a part of motor control centers, and the electrical power circuits shall be provided under Division 16, except internal wiring for components of package equipment shall be provided as an integral part of the equipment. When motors and equipment furnished are larger than sizes indicated, provide any required changes to the electrical service as may be necessary and related work as a part of the work for the section specifying that motor or equipment.

1.5.2 High Efficiency Motors

1.5.2.1 High Efficiency Single-Phase Motors

Unless otherwise specified, single-phase fractional-horsepower alternating-current motors shall be high efficiency types corresponding to the applications listed in NEMA MG 11.

1.5.2.2 High Efficiency Polyphase Motors

Unless otherwise specified, polyphase motors shall be selected based on high efficiency characteristics relative to the applications as listed in NEMA MG 10. Additionally, polyphase squirrel-cage medium induction motors with continuous ratings shall meet or exceed energy efficient ratings in accordance with Table 12-6C of NEMA MG 1.

1.5.3 Three-Phase Motor Protection

Provide controllers for motors rated one one horsepower and larger with electronic phase-voltage monitors designed to protect motors from phase-loss, undervoltage, and overvoltage. Provide protection for motors from immediate restart by a time adjustable restart relay.

1.6 INSTRUCTION TO GOVERNMENT PERSONNEL

When specified in other sections, furnish the services of competent instructors to give full instruction to the designated Government personnel in the adjustment, operation, and maintenance, including pertinent safety requirements, of the specified equipment or system. Instructors shall be thoroughly familiar with all parts of the installation and shall be trained in operating theory as well as practical operation and maintenance work.

Instruction shall be given during the first regular work week after the equipment or system has been accepted and turned over to the Government for regular operation. The number of man-days (8 hours per day) of instruction

furnished shall be as specified in the individual section. When more than 4 man-days of instruction are specified, use approximately half of the time for classroom instruction. Use other time for instruction with the equipment or system.

When significant changes or modifications in the equipment or system are made under the terms of the contract, provide additional instruction to acquaint the operating personnel with the changes or modifications.

1.7 ACCESSIBILITY

Install all work so that parts requiring periodic inspection, operation, maintenance, and repair are readily accessible. Install concealed valves, expansion joints, controls, dampers, and equipment requiring access, in locations freely accessible through access doors.

PART 2 PRODUCTS

Not used.

PART 3 EXECUTION

3.1 PAINTING OF NEW EQUIPMENT

New equipment painting shall be factory applied or shop applied, and shall be as specified herein, and provided under each individual section.

3.1.1 Factory Painting Systems

Manufacturer's standard factory painting systems may be provided subject to certification that the factory painting system applied will withstand 125 hours in a salt-spray fog test, except that equipment located outdoors shall withstand 500 hours in a salt-spray fog test. Salt-spray fog test shall be in accordance with ASTM B 117, and for that test the acceptance criteria shall be as follows: immediately after completion of the test, the paint shall show no signs of blistering, wrinkling, or cracking, and no loss of adhesion; and the specimen shall show no signs of rust creepage beyond 0.125 inch on either side of the scratch mark.

The film thickness of the factory painting system applied on the equipment shall not be less than the film thickness used on the test specimen. If manufacturer's standard factory painting system is being proposed for use on surfaces subject to temperatures above 120 degrees F, the factory painting system shall be designed for the temperature service.

3.1.2 Shop Painting Systems for Metal Surfaces

Clean, pretreat, prime and paint metal surfaces; except aluminum surfaces need not be painted. Apply coatings to clean dry surfaces. Clean the surfaces to remove dust, dirt, rust, oil and grease by wire brushing and solvent degreasing prior to application of paint, except metal surfaces subject to temperatures in excess of 120 degrees F shall be cleaned to bare metal.

Where more than one coat of paint is specified, apply the second coat after the preceding coat is thoroughly dry. Lightly sand damaged painting and retouch before applying the succeeding coat. Color of finish coat shall be aluminum or light gray.

a. Temperatures Less Than 120 Degrees F: Immediately after cleaning, the metal surfaces subject to temperatures less than 120 degrees F shall receive one coat of pretreatment primer applied to a minimum dry film thickness of 0.3 mil, one coat of primer applied to a minimum dry film thickness of one mil; and two coats of enamel applied to a minimum dry film thickness of one mil per coat.

b. Temperatures Between 120 and 400 Degrees F: Metal surfaces subject to temperatures between 120 and 400 degrees F shall receive two coats of 400 degrees F heat-resisting enamel applied to a total minimum thickness of 2 mils.

-- End of Section --

SECTION 15131A

VERTICAL PUMPS, AXIAL-FLOW AND MIXED-FLOW IMPELLER-TYPE
05/99

PART 1 GENERAL

1.1 REFERENCES

The publications listed below form a part of this specification to the extent referenced. The publications are referred to in the text by basic designation only.

AMERICAN NATIONAL STANDARDS INSTITUTE (ANSI)

ANSI S2.19	(1989) Mechanical Vibration - Balance Quality Requirements of Rigid Rotors, Part 1: Determination of Permissible Residual Unbalance (ASA 86)

AMERICAN SOCIETY FOR TESTING AND MATERIALS (ASTM)

ASTM A 27/A 27M	(1995) Steel Castings, Carbon, for General Application
ASTM A 36/A 36M	(1997ae1) Carbon Structural Steel
ASTM A 48	(1994a) Gray Iron Castings
ASTM A 108	(1999) Steel Bars, Carbon, Cold Finished, Standard Quality
ASTM A 217/A 217M	(1998) Steel Castings, Martensitic, Stainless and Alloy, for Pressure-Containing Parts, Suitable for High-Temperature Service
ASTM A 269	(1998) Seamless and Welded Austenitic Stainless Steel Tubing for General Services
ASTM A 276	(1998b) Stainless Steel Bars and Shapes
ASTM A 285/A 285M	(1990; R 1996) Pressure Vessel Plates, Carbon Steel, Low- and Intermediate-Tensile Strength
ASTM A 312/A 312M	(1999) Seamless and Welded Austenitic Stainless Steel Pipes
ASTM A 351/A 351M	(1994a; R 1999) Castings, Austenitic, Austenitic-Ferritic (Duplex), for Pressure-Containing Parts
ASTM A 352/A 352M	(1993; R 1998) Steel Castings, Feritic and Martensitic, for Pressure-Containing Parts, Suitable for Low-Temperatue Service

ASTM A 516/A 516M	(1990; R 1996) Pressure Vessel Plates, Carbon Steel, for Moderate- and Lower-Temperature Service
ASTM A 576	(1990b; R 1995e1) Steel Bars, Carbon, Hot-Wrought, Special Quality
ASTM A 609/A 609M	(1991; R 1997) Castings, Carbon, Low-Alloy, and Martensitic Stainless Steel, Ultrasonic Examination Thereof
ASTM A 668/A 668M	(1996e1) Steel Forgings, Carbon and Alloy, for General Industrial Use
ASTM B 148	(1997) Aluminum-Bronze Sand Castings
ASTM B 584	(1998a) Copper Alloy Sand Castings for General Applications
ASTM D 2000	(1999) Rubber Products in Automotive Applications
ASTM E 165	(1995) Liquid Penetrant Examination
ASTM E 709	(1995) Magnetic Particle Examination

ASME INTERNATIONAL (ASME)

ASME B46.1	(1995) Surface Texture (Surface Roughness, Waviness, and Lay)
ASME B106.1M	(1985) Design of Transmission Shafting (Second Printing)

AMERICAN WATER WORKS ASSOCIATION (AWWA)

AWWA C200	(1997) Steel Water Pipe 6 in. (150 mm) and Larger
AWWA C203	(1997) Coal-Tar Protective Coatings and Linings for Steel Water Pipelines - Enamel and Tape - Hot Applied
AWWA C207	(1994) Steel Pipe Flanges for Waterworks Service - Sizes 4 in. Through 144 in. (100 mm Through 3,600 mm)
AWWA C208	(1996) Dimensions for Fabricated Steel Water Pipe Fittings

AMERICAN WELDING SOCIETY (AWS)

AWS D1.1	(1998) Structural Welding Code - Steel

HYDRAULIC INSTITUTE (HI)

HI 2.1-2.5	(1994) Vertical Pumps
HI 2.6	(1994) Vertical Pump Test

HI 9.1-9.5 (1994) Pumps - General Guidelines

ISA - THE INSTRUMENTATION, SYSTEMS AND AUTOMATION SOCIETY (ISA)

ISA RP2.1 (1985) Manometer Tables

1.2 SYSTEM DESCRIPTION

Design, furnish, and install 4identical vertical axial-flow single stage impeller-type pumps.

1.2.1 Design Requirements

a. Pumps are for the purpose of pumping storm water from collection well into adjacent waterway. Water pumped will not exceed 85 degrees F, will be relatively turbid, and may contain sand, silt, and vegetative trash capable of passing trashrack. Trash-racks will have 2 inch clear openings.

b. Pumps shall be driven by vertical hollow shaft motors as described in paragraph DRIVE EQUIPMENT.

c. Design pump so that no major modifications, alterations, or additions will be required to the pumping station or suction bays to accommodate it. However, requests for changes in setting of pump, supports, and accessories, which would involve only minor modifications, will be considered. Design pump so that pump parts will fit within the limiting horizontal and vertical dimensions shown and so installation and maintenance can be accomplished by truck crane using hatch in roof. Pumps, or pump parts assembled at pumping station shall be capable of being lowered through floor openings shown with minimum of 1 inch clearance around each side.

d. Pump shall discharge into discharge system shown. Friction losses from low and high water levels to end of discharge line, including bend losses, exit loss, and velocity head, are given on the drawings.

e. Pump discharge system downstream of pump including discharge elbows and flap gates shall be designed by pump manufacturer. It shall be of type shown and shall fit within limiting dimensions and elevations shown.

1.2.2 Capacities

The pump shall have capacities as indicated on the drawings.

1.3 SUBMITTALS

Government approval is required for submittals with a "G" designation; submittals not having a "G" designation are for information only. When used, a designation following the "G" designation identifies the office that will review the submittal for the Government. The following shall be submitted in accordance with Section 01330 SUBMITTAL PROCEDURES:

SD-02 Shop Drawings

Drawings; G, AE

Within 90 days of notice of award of contract, submit drawings listed below. Submit drawings of sufficient size to be easily read. Submit information in the English language. Dimensions shall be in English or metric with English conversion.

a. Outline drawings of pump showing pertinent dimensions and weight of each component of the pump.

b. Drawing showing details and dimensions of pump mounting design or layout including any embedded items and the FSI.

c. Cross-sectional drawings of pump showing each component. Show major or complicated sections of pump in detail. Indicate on each drawing an itemized list of components showing type, grade, and class of material used and make and model number of standard component used.

d. Detail and assembly drawings required for manufacturing showing dimensions, tolerances, and clearances of shafts, bearings, including dimensions of grooving, couplings, and packing gland, and diameter and tip clearance of propeller.

e. Drawings covering erection and installation.

SD-03 Product Data

Materials; G, AE

Furnish two copies of purchase orders, mill orders, shop orders for materials, and work orders, including orders placed or extended by each supplier. Contractor shall at time of submittal of drawings furnish list designating materials to be used for each item.

Furnish, within 60 days of notice of award, names of manufacturers of machinery and other equipment which Contractor contemplates incorporating in the work, together with performance capacities and other relevant information pertaining to the equipment.

Spare Parts; G, AE

Furnish 10 copies of manufacturer's complete parts list showing all parts and spare parts and bulletins for pump. Clearly show all details and parts, and adequately describe parts or have proper identification marks.

Total Head; G, AE

Submit computations of total head and all losses.

Dynamic Analysis; G, AE

Submit detailed analysis report.

Installation Instructions Manual; G, AE

No later than time of pump delivery, furnish three copies of

typed or printed, and bound, manual describing procedures to be followed in erecting, assembling, installing, and wet-testing pump. To the extent necessary or desirable, coordinate and consolidate description of pump with similar descriptions specified for motor.

Description shall be complete, orderly, step-by-step explanation of operations required, and shall also include such things as alignment procedures, bolt torque values, permissible blade/bowl clearances; permissible bowl out-of-roundness; permissible shaft misalignment; recommended instrument setups; recommended gages and instruments; bearing clearances; and similar details.

Description shall be complemented and supplemented by drawings, sketches, photos, and similar materials to whatever extent necessary or desirable, and the overall result shall be a description that may be comprehended by an engineer or mechanic without extensive experience in erecting or installing pumps of this type.

Instructions and Procedures; G, AE

Prior to proceeding with construction of the test setup but not later than 90 days after date of notice to proceed, submit a description of the test setup and test procedure proposed. Include dimensioned drawings and cross-sectional views of the setup and pump, respectively, with location of instruments and points of their connection shown.

Factory Test; G, AE

Submit a factory test report as required by paragraph TEST REPORT.

SD-10 Operation and Maintenance Data

Operation and Maintenance Instructions Manual; G, AE

Furnish 10 copies of manual containing complete information on operation, lubrication, adjustment, routine and special maintenance, disassembly, repair, reassembly, and trouble diagnostics of pump and auxiliary units. Operation and maintenance manual and both parts lists shall be printed on good quality 8-1/2 by 11-inch paper, bound separately between flexible, durable covers. Drawings incorporated in manual or parts lists, may be reduced to page size provided they are clear and legible, or may be folded into the manual to page size. Photographs or catalog cuts of components may be included for identification.

1.4 DELIVERY, STORAGE AND HANDLING

1.4.1 Processing for Storage

Prepare pumps (and spare parts) for storage indoors. Indoor storage shall consist of a permanent building that has leak-proof roof, full walls to contain stored equipment, and a concrete floor or temporary trailers. A temporary structure may also be built at job site for equipment storage that will contain features of the permanent building above except that

provision for ventilation will be provided and floor may be crushed rock. A vapor barrier will be provided below the crushed rock. Crushed rock will be of sufficient thickness so that settlement of equipment will not occur. Equipment stored on crushed rock will have cribbing under each support location so that equipment does not come in contact with crushed rock. A plastic barrier will be placed between equipment and wood cribbing. Submit a list of equipment and materials requiring humidity-controlled storage to Contracting Officer no later than 30 days prior to shipment of pumping units. Long term storage (greater than 6 months) requirements shall be in accordance with pump manufacturers recommendations.

1.5 PROJECT/SITE CONDITIONS

1.5.1 Datum

Elevations shown or referred to in specifications, are above plus or below mean sea level.

1.5.2 Static Head

Static head is the difference, in feet, between water surface elevation in sump and centerline of discharge flap gate. Total head includes static head, friction losses outside of equipment being furnished, plus velocity head loss.

1.6 MAINTENANCE

1.6.1 Special Tools

Furnish one set of all "special tools" required to completely assemble, disassemble, or maintain pump. "Special tools" refers to oversized or specially dimensioned tools, special attachment or fixtures, or any similar items. If required, provide a device for temporarily supporting pump shaft and impeller during assembly, disassembly, and reassembly of motor when thrust bearing is not in place. Lifting devices required for use in conjunction with truck crane shall be furnished. Provide portable steel cabinet large enough to accommodate all "special tools" furnished under this paragraph and as required by Division 16 Sections. Mount cabinet on four rubber-tired casters. Provide drawers to accommodate tools. Fit front of cabinet with doors hinged to swing horizontally. Furnish doors with necessary stops, catches, and hasps for completely securing cabinet with a padlock. Furnish padlock complete with three keys. Pack "special tools" in wooden boxes if size and weight do not permit storage in tool cabinet. Provide slings if box and tools are heavier than 75 pounds.

1.7 ERECTION ENGINEER(S)

Furnish one or more competent erecting engineers fluent in English language who is knowledgeable about the installation of the vertical pumps and associated drive machinery. Erecting engineers provided by this section shall include those from Contractor's suppliers. When so requested, erecting engineers shall provide and be responsible for providing complete and correct direction during initial starting and subsequent operation of equipment until field tests are completed. Erecting engineer shall initiate instructions for actions necessary for proper receipt, inspection, handling, uncrating, assembly, and testing of equipment. The Erecting Engineer(s) shall also keep a record of measurements taken during erection, and shall furnish one copy to Contracting Officer on request or on completion of installation of assembly or part. Erecting engineer shall

instruct Contracting Officer in operation and maintenance features of work.

PART 2 PRODUCTS

2.1 MATERIALS AND METALWORK FABRICATION

If not specified, materials and fabrication shall conform to the requirements of Section 05500, "Miscellaneous Metals. Material selection not specified shall be guided by HI 9.1-9.5 for corrosion, erosion, and abrasion resistance. Deviations from the specified materials shall be submitted in accordance with paragraph SUBMITTALS.

2.1.1 Designated Materials

Designated materials shall conform to the following specifications, grades, and classifications.

MATERIAL	GRADE	CLASS	SPECIFICATION
Aluminum-Bronze	Alloy No. C95500 Castings		ASTM B 148
Cast Iron		Class No. 30A, 30B, and 30C	ASTM A 48
Cast Steel	Grade 65-35 annealed		ASTM A 27/A 27M
Coat Tar Protective Coatings - Hot Applies			AWWA C203
Cold-Rolled Steel Bars	min. Wt. Str. 65,000 psi		ASTM A 108
Copper Alloy Castings	Alloy No. C93700		ASTM B 584
Corrosion-Resistant Alloy Castings	Grade CA15 CA6NM CF8M		ASTM A 217/A 217M ASTM A 352/A 352M ASTM A 351/A 351M
Dimensions for Steel Water Pipe Fittings			AWWA C208
Hot-Rolled Stainless	Graded G10200 and G11410		ASTM A 576
Ring Flanges		Class B	AWWA C207
Rubber Products in Automotive Appl.			ASTM D 2000
Seamless and Welded Aust. Stainless Steel Pipe			ASTM A 312/A 312M

MATERIAL	GRADE	CLASS	SPECIFICATION
Stainless Bars and Shapes	Grades S30400 and S41000		ASTM A 276
Steel Forgings		Class F	ASTM A 668/A 668M
Steel Pipe 6 inches and Larger			AWWA C200
Steel Plates, Pressure Vessel	Grade 55		ASTM A 516/A 516M
Steel Plates, Structural Quality	Grade B		ASTM A 285/A 285M
Structural Steel			ASTM A 36/A 36M
Surface Texture (Surface Roughness, Waviness, and Lay)			ASME B46.1

2.1.2 Bolted Connections

2.1.2.1 Bolts, Nuts, and Washers

Bolts, nuts, and washers shall conform to requirements of paragraph MATERIALS AND METALWORK FABRICATION, subparagraph DESIGNATED MATERIALS, and paragraph VERTICAL PUMPS, subparagraph PUMP COLUMN AND DISCHARGE ELBOW, subparagraph NUTS AND BOLTS for types required. Use beveled washers where bearing faces have a slope of more than 1:20 with respect to a plane normal to bolt axis.

2.1.2.2 Materials Not Specifically Described

Materials not specifically described shall conform to latest ASTM specification or to other listed commercial specifications covering class or kinds of materials to be used.

2.1.3 Metalwork

2.1.3.1 Flame Cutting of Material

Flame cutting of material other than steel shall be subject to approval of Contracting Officer. Shearing shall be accurately done, and all portions of work neatly finished. Steel may be cut by mechanically guided or hand-guided torches, provided an accurate profile with a smooth surface free from cracks and notches is secured. Surfaces and edges to be welded shall be prepared in accordance with AWS D1.1. Chipping and/or grinding will not be required except where specified and as necessary to remove slag and sharp edges of mechanically guided or hand-guided cuts not exposed to view. Visible or exposed hand-guided cuts shall be chipped, ground, or machined to metal free of voids, discontinuities, and foreign materials.

2.1.3.2 Alignment of Wetted Surfaces

Exercise care to assure that correct alignment of wetted surfaces being joined by a flanged joint is being obtained. Where plates of the water

passage change thickness, transition shall occur on the outer surface, leaving inner surface properly aligned. When welding has been completed and welds have been cleaned, but prior to stress relieving, joining of plates shall be carefully checked in the presence of Government inspector for misalignment of adjoining parts. Localized misalignment between inside or wetted surfaces of an adjoining flange-connected section of pump or formed suction intake shall not exceed amount shown in Column 4 of Table 1 for the respective radius or normal distance from the theoretical flow centerline. Misalignments greater than allowable amount shall be corrected by grinding away offending metal, providing the maximum depth to which metal is to be removed does not exceed amount shown in Column 5 of Table 1. No metal shall be removed until Contractor has assured himself and Contractor Officer that no excessive stresses will occur in remaining material and that excessive local vibration will not result from removal of the material. Where required correction is greater than the amount in Column 5 of Table 1, pipe shall be rejected for use. Proposed procedure for all corrective work, other than minor grinding, shall be approved by Contracting Officer prior to start of corrective work. Corrective work shall be finished by grinding corrected surface to a smooth taper. Length of the taper along each flow line element shall be 10 times the depth of the offset error at flow line. Wetted surface irregularities that might have existed in an approved model shall not be reason for accepting comparable surface irregularities in prototype pump.

TABLE 1

(1) Pipe Diameter Inches	(2) Pipe Radius or Distance Inches	(3) Pipe Thickness Inches	(4) Maximum Offset Inches	(5) Grind-Not More Than Inches
24	12	3/8	1/16	3/32
30	15	3/8	1/16	3/32
36	18	3/8	3/32	3/32
42	21	1/2	3/32	1/8
48	24	1/2	1/8	1/8
54	27	1/2	1/8	1/8
60	30	3/4	5/32	3/16
72	36	1	5/32	3/16
84	42	1-1/8	3/16	1/4

2.1.3.3 Stress-Relieving Procedure

After all fabrication welding is completed, and prior to any machining, stress-relieve bell by heat treatment. Contractor shall submit proposed stress-relieving procedure for approval by Contracting Officer.

2.1.4 Examination of Castings

All castings shall be cleaned and carefully examined for surface defects. All defects shall be further examined by nondestructive means. Examination personnel shall be qualified/certified in accordance with applicable ASTM requirements. The examination procedure and qualification of the examiner shall be submitted for approval. Examination tests shall be made in the presence of the Contracting Officer. The Contractor shall choose the examination procedure best suited for the application.

2.1.4.1 Examination Procedures

a. Ultrasonic - Inspection shall conform to the applicable provisions of ASTM A 609/A 609M.

b. Magnetic Particle - Inspection shall conform to the applicable provisions of ASTM E 709.

c. Liquid Penetrant - Inspection shall conform to the applicable provisions of ASTM E 165.

2.1.4.2 Acceptance and Repair Criteria

Acceptance and repair criteria shall be in accordance with Division 5.

2.2 VERTICAL PUMPS

2.2.1 Speed

Rotative speed of pump shall be no greater than 720 rpm.

2.2.2 Reverse Flow

Pump shall withstand, with no damage, the full force exerted on it, with impeller subjected to reverse flow and upper end locked in place by backstop. Calculate head to determine the force developed by this reverse flow from specified highest discharge side water elevation and lowest pump intake side water elevation. Reverse rotative speed shall be 0.0 with instantaneous activation of backstop.

2.2.3 Efficiency

Pump efficiency, as defined in HI 2.6, shall include losses from the suction bell to the discharge elbow outlet and shall not be less than 75 percent at the head-capacity condition(s) indicated on the drawings.

2.2.4 Suction Bell

Make suction bell of either cast iron, cast steel, or welded steel plate,. Provide flanged connection for mating with impeller bowl with a rabbet fit or four equally spaced dowels installed in the vertical position for initial alignment purposes and to maintain concentric alignment of pump. Steel plate, if used, shall have thickness of not less than 3/8 inch. Suction bell shall be made in one piece. Alignment shall be maintained by use of dowels. Suction bell shall be supported entirely by pump casing. Supports from sump floor will not be acceptable, except those that are part of a formed suction intake. Umbrellas, if used, should be supported by suction bowl. Construct umbrella in two pieces if a single piece umbrella could not be removed using pump opening in operating floor. Provide bolted flanges on each half of umbrella and provide for easily removable bolted connection to suction bowl. Provide sufficient lifting lugs on umbrella to aid in handling.

2.2.5 Impeller Bowl

Make impeller bowl of either cast iron, cast steel, welded steel plate or a combination of cast steel and steel plate. Steel plate, if used, shall have thickness of not less than 1/2 inch after machining is completed. Welds shall be heat-treated stress-relieved before final machining. Provide flanges for mating with suction bell and impeller bowl or two-piece construction of impeller. Flanged connections with suction bell and the

diffuser or split construction shall be provided with a rabbet fit or four equally spaced dowels installed in the vertical position for initial alignment purposes and to maintain concentric alignment of pump. Machine finish impeller-swept area in impeller bowl to at least 125 microinch rms and concentric with impeller axis. Tolerance for concentricity of impeller with the impeller axis shall not be greater than 20 percent of the operating clearance between impeller and impeller bowl.

2.2.6 Diffuser Bowl

Make diffuser bowl of cast iron, cast steel, welded steel plate, or a combination of cast steel and steel plate. Steel plate, if used, shall have thickness of not less than 1/2 inch after machining is completed. Diffuser shall contain support for upper impeller shaft bearing and have vanes to guide the pumped flow. Equip diffuser bowl with a bypass drain to outside of pump from the diffuser cavity located between the enclosing tube connection and impeller. Furnish throttle bushing located in the cavity immediately above impeller. Bypass drain and throttle bushing should be designed to reduce water pressure on lower seal. Impeller back-wear rings can also be used to reduce water pressure on lower seal.

2.2.7 Pump Column and Discharge Elbow

2.2.7.1 Column and Discharge Elbow

Make column and discharge elbow of cast steel or welded steel plate. Steel plate, if used shall have thickness of not less than 3/8 inch after machining is completed. Elbow shall be of mitered type. Turning vanes shall not be used. Column and discharge elbow shall be designed to withstand internal pressures and external loadings associated with various conditions of pump operation. Provide flanges for mating individual segments together and for mating pump column to diffuser bowl. Flanges shall have rabbeted fits or four equally spaced dowels installed in flanges for initial alignment purposes and to maintain concentric alignment. The elbow shall terminate in a plain-end circular section. Diameter tolerance of plain end shall be 0.10 inch. Diameter of discharge end of elbow shall be as shown and shall allow standard diameter flexible couplings to be used. Adjustable thrust rods and thrust lugs shall be used to transfer the load by bridging the coupling.

2.2.7.2 Column and Discharge Elbow Support

Pump column and discharge elbow shall be designed for suspension from a baseplate assembly specified in paragraph BASE PLATE AND SUPPORTS and located at operating floor level.

2.2.7.3 Flanges

Machine flanges and drill bolt holes concentric with pump shaft vertical centerline, having tolerance of plus or minus one fourth of clearance between bolt and bolt hole. When fabricated from steel plate, flanges shall not be less than 3/4 inch thick after machining. Flange thickness after machining shall not vary more than 10 percent of greatest flange thickness. Provide external stiffeners, if needed. Construct fabricated flanges, as a minimum, to the dimensions of AWWA C207, Class B. Flanges on major components of pump casing (suction bell, impeller bowl, diffuser bowl, and column and elbow piping) shall be designed such that blind holes necessitating use of cap screws or stud bolts will not be used. Design flanges for connection to column pipe by at least two continuous fillet

welds. One weld shall connect inside diameter of flange to pump column and the other shall connect outside diameter of pump column to flange. Final design of welds rests with manufacturer, and specified welds are the minimum requirement. They shall be parallel machined, when provided on each end of the same component, and mounted parallel to a plane that is normal to pump shaft centerline. Flanges on each end of the same component shall have parallel tolerance of 0.002 inch. Finish machine mating surface on flange to 125 microinch finish or better. Provide flanges with minimum of three jacking bolts to aid in disassembly of pump.

2.2.7.4 Flanged Joints

Design flanged joints to be air-and water-tight, without the use of preformed gaskets, against positive and negative operating pressures that will be experienced, except that "PERMATEX" or equal gasketing compound will be permitted. Provide mating flanges, unless of the male-female rabbet type, with not less than four tapered dowels equally spaced around flange. If rabbeted fit is not used, then Contractor shall provide the method used to determine concentricity of connected pieces.

2.2.7.5 Nuts and Bolts

Bolts used in assembling pump and its supporting members, including anchor bolts and dowels, shall be of 300 series stainless steel. Use only bronze nuts and hexagonal bolts and nuts. Washers used shall be 300 series of stainless steel.

2.2.7.6 Galvanic Protection

When dissimilar metals are used, use zinc anodes. Provide machined mounting pads and install anodes on carbon steel or cast iron parts. Fasten anodes to bare material on pump so that continuity is obtained between anode and pump. Verify continuity by checking joint with an ohmmeter. Locate anodes on exterior of pump below normal sump level. Total weight of anodes used per pump shall be 40 pounds. Pump joints shall be electrically bonded at the joints.

2.2.7.7 Harnessed Coupling

Provide a flexible mechanical coupling, Dresser style or equal, to connect pump discharge elbow to wall thimble.

2.2.7.8 Wall Thimble

Wall thimble shall have one plain end to accommodate flexible mechanical coupling and one flanged end to mate with flap valve. Plain end shall match pump discharge elbow in thickness and diameter and flanged end shall be drilled to match, and shall be capable of supporting without distortion, the flap valve. Provide seal ring on wall thimble located so that it is centered in the wall when embedded. Fabricate wall thimble from steel plates.

2.2.8 Impeller

Make impeller of corrosion resistant ASTM A242 alloy steel.

2.2.8.1 Balance

Balance impeller by the two-plane balancing technique. Impeller shall be

balanced at rated operating speed. Check balance at 110 percent of balance speed, and make needed corrections. Amount of allowable unbalance shall be in accordance with grade G6.3 of ANSI S2.19. Weights needed to obtain required level of balance shall be securely fastened to inside cavity of impeller hub. In no case will portions of the impeller be removed or weights be added to outside of hub, vanes, or water passages.

2.2.9 Shafting

2.2.9.1 Shaft

Impeller shaft shall be stainless steel and intermediate shaft(s) shall be cold-rolled carbon steel or same material as impeller shaft. Design shafting so that shaft sections shall not exceed 10 feet in length and that any necessary vertical adjustment of impeller can be made from operating room floor without interfering with shaft alignment. Also provide for removal of impeller from below without disassembly of pump above impeller bowl. Design shafts based on criteria set forth in ASME B106.1M for two different design cases. The first uses a factor of safety of 5 based on ultimate tensile strength of shaft material and rated horsepower of motor. The second uses 75 percent of the yield strength of shaft material and locked rotor torque of motor.

2.2.9.2 Couplings

Pump and motor shafts and pump shaft sections shall be coupled together using rigid flanged coupling capable of transmitting the forces and torques involved. Coupling halves shall be bolted together and shall be maintained concentric with each other, by means of a rabbet fit, to within 0.002 inch. Shaft coupling nut, if used, shall be retained by fitted bolts, and all tolerances specified for the coupling shall apply. Finish machine the flange and bore in one setup to insure that flange of coupling shall be true to the bore. Flange shall be perpendicular to the bore, and parallel to the opposite end and mating flanges to within 0.002 inch. Flange shall be concentric to centerline of shaft to within 0.002 inch. Pump shaft sections shall be joined together with threaded couplings in which the threaded shaft ends are threaded into the coupling. Couplings, including keys and fasteners, shall be constructed of stainless steel materials. The finished shaft assembly shall be concentric about shaft centerline to within 0.004 inch. Shop assemble couplings and pump shaft and inspect for compliance with contract requirements. After inspection, matchmark parts, including fitted bolts, to their mating pieces.

2.2.9.3 Journals

Provide replaceable stainless steel one-piece journal sleeves at each guide bearing, packing gland and seal locations. Finish sleeves at all bearings and packing gland locations to at least 32 rms and finish sleeve at seal locations to 16 rms. Securely fasten sleeves to shaft to prevent movement. Keys and fasteners, if used, shall be made from corrosion resisting steel; fastening by adhesive or welding is not acceptable. The surface hardness of the sleeves at the bearing and packing gland locations shall be as recommended by the pump manufacturer.

If other than stainless steel shafting is used finish the shaft journal at all guide bearing and packing gland locations to at least 32 rms and finish shaft at seal journal locations to 16 rms. The Contractor has the option to install replaceable stainless steel one-piece sleeves at each bearing, packing gland and seal locations with the finishes stated above. Securely

fasten sleeves to shaft to prevent movement. Keys and fasteners, if used, shall be made from corrosion resisting steel; fastening by adhesive or welding is not acceptable. The surface hardness at the seal locations shall be as recommended by the seal manufacturer.

2.2.10 Shaft Enclosure

Provide shaft enclosure to cover intermediate shaft and coupling. It shall be placed in tension or shall be rigid enough to be self-supporting. External supports or bracing located in pump water passage shall not be used for support of the enclosing tube unless necessary to support intermediate bearings or indicated to be necessary or advantageous by dynamic analysis required in paragraph DYNAMIC ANALYSIS. Consider effect of external supports, including rubber inserts, in the dynamic analysis required in paragraph TEST, INSPECTIONS, AND VERIFICATIONS, subparagraph DYNAMIC ANALYSIS. Design enclosure to be watertight and for easy assembly and disassembly in the field. Enclosing tubes constructed with screw type joints and using tension in tube to hold alignment, shall be constructed to prohibit tension tube from unscrewing when packing gland adjustments are made. Provide shaft enclosure for grease-lubricated pumps with a drain having a shut-off valve located outside of the to permit draining enclosure between operation periods. Locate drain at bottom of shaft enclosure. On oil-lubricated pumps, the enclosing tube below lowest bearing and above oil seals shall be fitted with an oil/water drain line to the outside of pump. Drain line shall have a check valve outside of pump to preclude entrance of sump water.

2.2.11 Lifting Lugs

Furnish major pump components with lifting lugs or eye bolts to facilitate handling. Design and arrange lugs or bolts to allow safe handling of pump components singly or collectively as required during shipping, installation, and maintenance.

2.2.12 Guide Bearings and Seals

2.2.12.1 Guide Bearings

Provide pump with sleeve-type bearings designed for oil lubrication. Bearing shall have a bronze lining in contact with shaft journal and shall be replaceable type. Arrange bearing liner for maximum distribution of oil for lubrication of journal surface. Bearings shall have a surface finish of 32 microinches rms or better to match journal finish. Since pumped water may contain some fine sand and silt in suspension, give special attention to the design and selection of bearing parts, especially seal rings, to preclude entrance of foreign material between bearing and journal due to differential water pressure.

2.2.12.2 Oil Lubrication Shaft Seals

Pumps designed for oil lubrication shall have a shaft seal system located below upper pump shaft bearing. Seal system shall consist of a seal containing two lip elements. Element facing bearing shall have a stainless steel garter spring back-up and be constructed of TFE (Teflon). Secondary element shall face impeller and be constructed of TFE. Use bullet-shaped assembly tool or other special tool over end of shaft or grooves in shaft to preclude damage to lip element during assembly. Assembly tools used are considered a special tool and shall be furnished to Government as part of special tools specified in paragraph MAINTENANCE, subparagraph SPECIAL

TOOLS.

2.2.13 Thrust Bearing

Provide thrust bearing in the motor to carry total thrust load.

2.2.14 Packing Gland

Provide grease-lubricated packing gland split longitudinally to facilitate removal or renewal. Arrange it to permit inspection, repair, removal, or replacement of packing without entering pump from below operating room floor. Provide eye bolts and tapped holes in each half of the split gland if halves weigh over each.

2.3 DRIVE EQUIPMENT

Electric Motor: The pump manufacturer shall provide the electric motors for the pumps. The motors shall be high efficiency 150 HP/600 RPM/480 V/3 Phase/60 hZ Weather Protected Type 1 (WP1) Vertical Hollow Shaft (VHS) motors rated for Variable Frequency Drive (VFD) input and across-the-line starting. Motors shall include space heaters and shall be spray tested at the motor manufacturer. Motors shall also have a 1.15 service factor.

2.4 LUBRICATION SYSTEM

Oil lubrication of shaft bearings shall consist of introducing oil at the top line shaft bearing and allowing oil to run down shaft for lubrication of lower bearings. Oil lubrication shall consist of an oil reservoir mounted on pump baseplate or pump driver at such height to permit gravity flow of oil to the highest lubrication point of pump shaft. Construct reservoir of transparent material to permit observation of quantity of oil in reservoir. Oil reservoir shall have a minimum capacity of 1 quart. Reservoir shall have a solenoid valve to permit oil flow whenever pump driver is in operation. Flow rate from oil reservoir shall be adjustable from five drips per minute to constant flow. Reservoir valve shall permit manual flow of oil when pump driver is not operating for prelubrication of shaft bearing. Construct oil line from oil reservoir to pump line shaft of stainless steel tubing and support at sufficient locations to preclude vibration of tubing when pump is operating.

2.4.1 Centralized Pressure Lubrication System

2.4.1.1 Piping

System piping shall be stainless steel tubing (ASTM A 269, Type 410 or equal) using flared or compression-type connectors. Adequately protect and rigidly support piping located below operating room floor in a manner approved by Contracting Officer. Provide each individual grease line with a "Tee" fitting, located immediately below the respective metering valve and accessible from operating room. Also provide with a standard 1/4 inch grease fitting so that each individual line may be fully charged without using pump of lubricating system. Size and strength of pipe and type and strength of fittings shall be as recommended and guaranteed by lubrication system manufacturer, but in no case shall bursting pressure of pipe or tubing used be less than three times the maximum working pressure. Provide check valve located between discharge outlet of the measuring valve and "Tee" fitting specified above in each lubricating line of bearings that is exposed to water pressure to prevent entrance of water into the respective measuring valves.

2.4.2 Lubrication System Accessories

2.4.2.1 Grease Gun

A hand operated, heavy duty lever grease gun for charging lubrication lines and for emergency lubrication shall be provided. Provide grease as recommended by the vertical pump manufacturer.

2.5 PAINTING

The pump and pump parts shall be painted with coal tar epoxy or equal.

2.6 TESTS, INSPECTIONS, AND VERIFICATIONS

2.6.1 Dynamic Analysis

Assembled pumping unit, consisting of motor and pump shall be free from critical speeds or harmful torsional vibrations at all speeds encountered within the operating range.

Before pump and motor, are released for manufacture, pump/motor structure shall be analyzed by pump manufacturer for harmful natural frequencies in the lateral and torsional directions. A natural frequency that occurs within 25 percent above or below normal operating speed is unacceptable. Dynamic analysis model shall be constructed using a commercially available program such as Ansys, Cosmos/M, or equivalent, which utilize finite element methods. Incorporate effects of column pipes, cover pipes, shafts, bearings, mass concentrations, and other such features as necessary to accurately model pump structure. Analyze structure in the run (wet) condition and consider the effect of water mass in the column and damping effect of water in the sump (vertical units only) at highest and lowest sump water levels. Incorporate Reed critical frequency and mass elastic diagram information provided by motor manufacturer. If motor manufacturer cannot demonstrate to the satisfaction of Contracting Officer (based on impact tests of similar units) that the Reed critical frequency value is accurate, motor manufacturer shall conduct a dynamic analysis using finite element methods as described to determine motor Reed critical frequency for use by pump manufacturer. Submit complete dynamic analysis report including the following information:

a. Computer program used.

b. Schematic diagram of the model depicting nodes and elements.

c. Input data consisting of node coordinates, element types, material properties, element characteristics, element connectivities, and specified displacements.

d. Motor mass elastic and Reed critical information (or dynamic analysis, if required).

e. Analysis results, including significant natural frequencies.

f. Interpretation of results.

Impact test motor furnished before shipment to determine actual Reed critical frequency of motor. Include results of impact tests included in motor test data to be submitted. Pump manufacturer shall address any

discrepancy between calculated and actual motor Reed critical frequency values to determine whether design changes are required to prevent harmful natural frequencies in the pump/motor structure. If any design changes are required, these shall be incorporated at no cost to Government.

2.6.2 Lubricating System Tests

Test complete lubricating system for each pumping unit, as deemed necessary by Contracting Officer, to determine that system meets operational requirements specified. At least one valve of each size furnished shall be tested with the lubrication line removed from its bearing and fitted with a pressure relief valve and pressure gage. The pressure relief valve shall be adjusted to discharge it at the operating pressure specified and the system shall be operated through one or more cycles as required to obtain an accurate measurement of the quantity of lubricant delivered, which shall be within plus or minus 20 percent of the theoretical delivery of the respective valve. Any component parts that are damaged as the result of these tests or that fail to meet the requirements of the specification shall be replaced, reinstalled, and retested at the Contractor's expense.

2.6.3 Factory Test

2.6.3.1 General

Performance of the pumps to be furnished shall be proven on the basis of the factory test. Conduct this test using either a scale model of pump or first pump produced for this contract. Cavitation testing shall be performed in accordance with HI 2.6 if no published NPSHR curves are available.

2.6.3.2 Instrumentation and Procedures

Each instrument shall be described in detail, giving all data applicable, such as manufacturer's name, type, model number, certified accuracy, coefficient, ratios, specific gravity of manometer fluid to be used, and smallest scale division. When necessary for clarity, sketch of instrument or instrument arrangement shall be included. Include fully detailed narrative description of each proposed method of instrumentation, procedures to be used, and a sample set of computations. State the lowest equivalent static head that is obtainable with the testing when operating along the head-capacity curve of proposed pump. Test procedures, except as specified, shall be in accordance with applicable provisions of HI 2.6.

a. Head Measurements - Make head measurements using either a direct reading water column, mercury-air, mercury-water, a Meriam fluid manometer, or a pressure transducer. Measure vacuums with either a mercury-air, a mercury-water manometer, or a pressure transducer. Fluctuations shall be dampened sufficiently to permit column gages or a differential pressure transducer to be read to closest 0.01 foot of water. Manometers shall be used as indicated by ISA RP2.1. When pressure transducers are used, their accuracy shall be checked with a manometer.

b. Capacity - Determine capacity by calibrated venturi flowmeter or long-radius ASME flow nozzle. Do not use orifice plates. Connect venturi or nozzle taps to column gages equipped with dampening devices that will permit differential head to be determined to the closest 0.01 foot of water. Magnetic flowmeters and flowmeters utilizing ultrasonic flow measurements will be acceptable if

calibration of flowmeter has been completed within the last 6 months.

c. Rotational Speed of Pump - Measure rotational speed of pump in accordance with "Method of Rotary Speed Movement" in HI 2.6, except that revolution counters shall not be used. Non-contacting hand-held electronic tachometers are acceptable. Device used shall permit speed to be determined to 1 rpm.

d. Power Input - Measure power input to pump in accordance with "Power Measurements" in HI 2.6. Use a method to permit pump brake horsepower to be determined to the closest 0.5 horsepower.

e. Cavitation Tests - The instruments to be used for these tests shall be selected by the Contractor and shall be of the type suited for cavitation testing. However, in no case shall the instruments used yield results less accurate than those obtained with the performance test.

2.6.3.3 Pump Test

Test shall demonstrate that proposed pump complies with specified performance. Pump shall be capable of operation without instability over entire range of heads specified in paragraph CAPACITIES. Instability is defined, for this specification, as when one or more of the following conditions occur:

a. Pump has two or more flow rates at the same total head;

b. Head-capacity curve has a dip (region on curve where change in flow rate produces an abnormally low head);

c. When any point in usable range of head-capacity curve cannot be repeated within 3 percent.

Rerun test if this occurs. Compliance with specifications will be determined from curves required by paragraph TEST RESULTS. Test procedures, except as specified, shall be in accordance with applicable provisions of HI 2.6. Temperature of water used for testing shall be approximately the same for all tests run and shall be recorded during test runs.

2.6.3.4 Test Procedure

a. Performance of The Pump - The performance of the pump shall be determined by a series of test points sufficient in number to develop a constant-speed curve over the range of total heads corresponding to the static heads in paragraph CAPACITIES. The performance/test range shall include additional testing at total heads 2 feet higher than the total head determined in paragraph CAPACITIES. The lowest total head for testing shall be, as a minimum, the total head determined from paragraph "CAPACITIES". If the test setup permits testing at lower total heads, the range of total heads shall be extended 2 feet lower. Testing shall be inclusive for the speed(s) involved with water in the sump at elevations -1 and -10 feet. Tests shall be made using total heads. Head differentials between adjacent test points shall not exceed 3 feet, but in no case shall less than 10 points be plotted in the pumping range. If the plot of the data indicates a

possibility of instability or dip in the head-versus-capacity curve, a sufficient number of additional points on either side of instability shall be made to clearly define the head-capacity characteristics.

b. Sump Elevations - Tests shall be conducted at two different sump elevations (approximately a 5 foot differential) to determine the effect of test sump geometry on the performance of the pump. Should the test results indicate that the performance is not the same in all respects for both sump conditions, the Contractor shall take whatever corrective action is necessary to produce congruent results. One of the two sump elevations used may be at the specified elevation. The test results with this sump elevation shall meet all specified conditions of capacity, head, and brake horsepower. Submit curves indicating test results.

c. Tests Results - Plot results of tests to show total head, static heads, brake horsepower and efficiency as ordinates; all plotted against pump discharge as the abscissa. Plot curves showing prototype performance to a scale that will permit reading head directly to .4 foot, capacity to 100 gpm, efficiency to 1 percent, and power input to 10 horsepower.

d. Demonstration.-.Contractor shall demonstrate to Government that the blade templates fit the tested pump. Demonstration shall be done immediately after testing is completed. Contractor shall retain all templates for the tested pump , and shall furnish them to Government upon request of Contracting Officer, to permit Government to verify geometric similarity with the manufacturer's pump. In addition to providing templates, furnish dimensioned drawings of impeller, which contain all dimensions needed to manufacture it. Tested impeller shall be stamped with identification marks. Provide necessary facilities and instruments needed to permit Government to verify that pumps are in complete geometric similarity with the tested pump.

2.6.3.5 Cavitation Tests

a. NPSHR - NPSHR shall be determined on a constant-capacity, constant-speed basis, using arrangement Figure 2.62 or 2.63 as described under paragraph "Net Positive Suction Head Required Test" in HI 2.6. Suction conditions shall be varied to produce cavitation. NPSHR shall be the maximum value at which any one or all of the plotted curves, head, horsepower, and efficiency depart from the constant values (point of tangency). A sufficient number of points to accurately locate the departure point shall be obtained.

b. Value of NPSHR - The value of NPSHR shall be 1 foot less than the corresponding available net positive suction head (NPSHA). NPSHA shall be determined using the temperature of the water in the model at the time the tests are run and the datum shown on Figure 3 at the end of this section. The water elevations specified in paragraph CAPACITIES shall be used to determine the NPSHA for the pumps.

d. Plotting Test Results - The test results shall be plotted to the scales determined by the Contracting Officer at the time of the test. Curves showing total head, brake horsepower, and efficiency

as ordinates and NPSH as the abscissa shall be drawn. In addition, curves showing NPSHR versus capacity shall be drawn with NPSH as the ordinate and capacity as the abscissa. NPSHA points shall be shown on the curves.

e. Curves - Should it be considered necessary by the Contractor to take into account measurement inaccuracies when drawing the curve needed to determine NPSHR in accordance with paragraph NPSHR, the following method shall be used. No other method will be acceptable. The inaccuracy shall be determined by the Contractor for each parameter, and the calculations shall be furnished to the Contracting Officer for approval. Using the calculated inaccuracy as the radius and the test point as the center, a circle shall be drawn for each test point. Two curves, one a maximum and the other a minimum, shall be drawn and shall pass through or touch each circle. The maximum curve shall touch the top and the minimum curve shall touch the bottom of as many circles as is practicable while maintaining smooth curves. Should the plot indicate that a test point is obviously erroneous, it may be ignored by mutual consent or the test may be rerun. Halfway between the maximum and minimum curves, another curve (the mean) shall be drawn. The point at which the mean curve departs from the constant values (point of tangency) shall be considered to be the NPSHR of the pump for the capacity at which the test was run.

2.6.3.6 Test Report

Submit, within 30 days of receipt of approval of the witness test, to Government 7 bound copies of a report covering completely test setup and performance and cavitation tests. Each test report shall include, as a minimum, the following:

a. Statement of the purpose of test, name of project, contract number, and design conditions should be given. Where guaranteed values differ from specified values, they also should be given.

b. A resume of preliminary studies, if such studies were made.

c. Description of test pump and motor, including serial numbers, if available. Information required under "b" may be included here.

d. Description of test procedure used, including dates, test personnel, any retest events, and witness test data.

e. List of all test instruments with model numbers and serial numbers.

f. Sample computations (complete).

g. A discussion of test results.

h. Conclusions.

i. Photographic evidence in the form of either 24 color photographs of test equipment, test setup and representative test segments, and a VHS videotape, at least 30 minutes in length, covering the same information as photographs. All photographic evidence should be labeled with Contract number, location, date/time, and test activity. Videotape shall be voice annotated with the same information.

j. Copies of instrument calibration.

k. Copies of all recorded test data.

l. Curves required by paragraph TESTS RESULTS.

m. Curves showing the performance of the test pump.

n. Drawings of the test setup showing all pertinent dimensions and elevations and a detailed dimensioned cross section of the pump.

2.7 BASEPLATE AND SUPPORTS

The baseplate shall be proportioned to support the entire pump assembly, the motor and the loads (including the results of the dynamic analysis) to which it may be subjected during operation. It shall be supported and anchored as shown on the drawings. Lifting lugs or eye bolts, special slings, strongbacks, or other devices necessary to handle the pump during loading, unloading, erection, installation, and subsequent disassembly and assembly shall be furnished. A sole plate shall be provided under the baseplate. Jacking bolts shall be provided for leveling the baseplate assembly. An anchor bolt layout shall be provided to aid in placement of anchor bolts. All leveling jacking bolts shall be backed off after grouting so that they do not support any of the load. The pedestal supporting the motor shall contain a 1-inch lip to contain water leakage from the shaft packing. A threaded drain to the sump shall be provided.

2.8 FREEZE PROTECTION

All parts of the pump shall have drain holes to eliminate trapped water that could freeze. These drain provisions shall be self-draining without any requirement to enter the sump.

2.9 FACTORY ASSEMBLY

The pump shall be assembled at the manufacturer's plant to assure proper fitting and alignment of all parts. Tolerances shall not exceed those specified or shown on the the Contractor's manufacturing drawings. Rotating elements shall be checked for binding. The suction bell, impeller housing, diffuser, and the discharge elbow shall be properly match marked and have their centerlines clearly marked on the outside of all flanges to facilitate erection and alignment in the field. The Contractor shall notify the Contracting Officer sufficiently in advance to permit a representative of the Contracting Officer to inspect and witness the pump assembly. All parts disassembled for shipment shall be matchmarked.

2.10 NAMEPLATE

The pump shall be identified by means of a separate name-plate permanently affixed in a conspicuous location. The plate shall bear the manufacturer's name, model designation, serial number if applicable, and other pertinent information such as horsepower, speed, capacity, type, direction of rotation, etc. The plate shall be made of corrosion-resisting metal with raised or depressed lettering and contrasting background.

2.11 INSTRUCTION PLATES

The pump shall be equipped with suitably located instruction plates,

including any warnings and cautions, describing any special and important procedures to be followed in starting, operating, and servicing the equipment. Plates shall be made of corrosion-resisting metal with raised or depressed lettering and contrasting background.

2.12 GUARDS AND COVERS

Safety guards and/or covers shall be provided wherever necessary to protect the operators from accidental contact with moving parts. Guards and covers shall be of sheet steel, expanded metal, or another acceptable material and removable for disassembly of the pump.

2.13 SPARE PARTS

The Contractor shall furnish the following spare parts:

a. One complete replacement set of bearings, bearing shells, journal sleeves, shaft coupling, if applicable, and seals for one main pump.

b. One complete replacement set of wearing parts for the packing gland for one pump, and sufficient packing for all main pumps.

c. Fifty percent of each size and length of bolt, nut and washer used on one main pump assembly.

d. One oil storage container including drip device and solenoid oil valve.

e. One complete main pump shaft, including keys and thrust collars.

f. One complete main pump impeller. All spare parts shall be duplicates of the original parts furnished and shall be interchangeable therewith. Spare parts shall be packed in crates as specified in paragraph PROCESSING FOR STORAGE, subparagraph GENERAL. If the crates and parts are heavier than 75 pounds, slings should be provided.

PART 3 EXECUTION

3.1 INSTALLATION

The installation of the equipment furnished under this section and related drive machinery furnished under other sections of this specification shall be in accordance with the approved Installation Instructions Manual required by paragraph SUBMITTALS. The erection engineer(s), familiar with the equipment to be installed, shall supervise the handling, installation, start-up and testing of the equipment as required by paragraph ERECTION ENGINEER(S).

3.2 FIELD TESTS

3.2.1 Wet Tests

Each pump unit shall be given a test under load, at or near normal operating conditions, for at least 2 hours or as directed by the Contracting Officer. The test shall be conducted by the Contractor and will be witnessed by the Government. All supplies and equipment required to conduct the test shall be provided by the Contractor. During the test

the operation of the pumps will be observed and measurements of vibration and bearing temperatures shall be taken and recorded. Without additional costs to the Government, the Contractor shall make all changes and correct any errors for which the Contractor is responsible. The Contracting Officer may waive or postpone the test if sufficient water is not available. Appropriate changes will then be made to the contract.

3.2.1.1 Pump Vibration

Vibration measurements shall be taken in accordance with HI 2.1-2.5. Vibration limits shall not exceed those recommended by HI Figure 2.41. If it is not possible to operate the pump at its best efficiency point, vibration limits may be adjusted in accordance with the requirements of the stated standard.

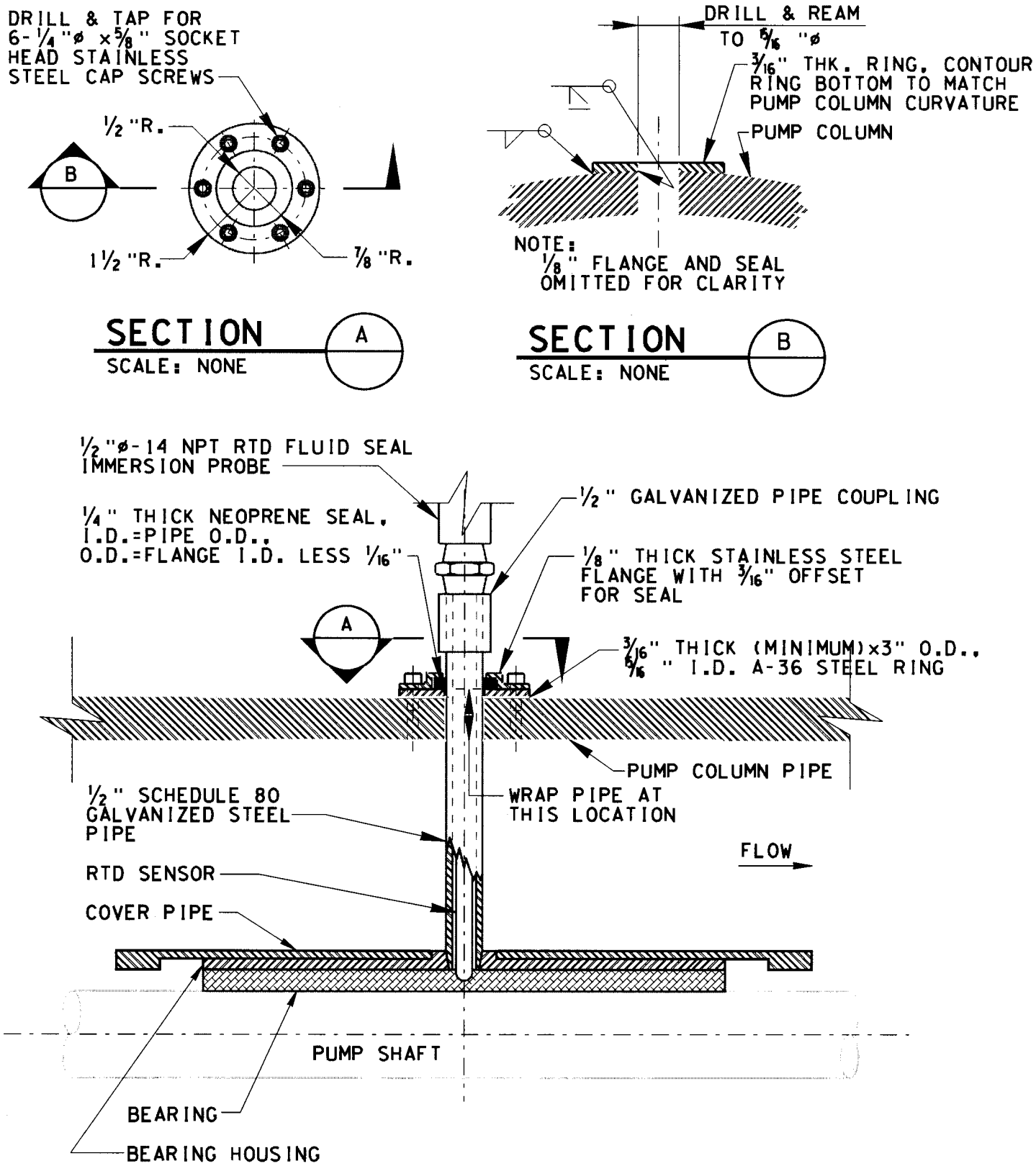

BEARING RTD INSTALLATION

SCALE: NONE

FIGURE 2

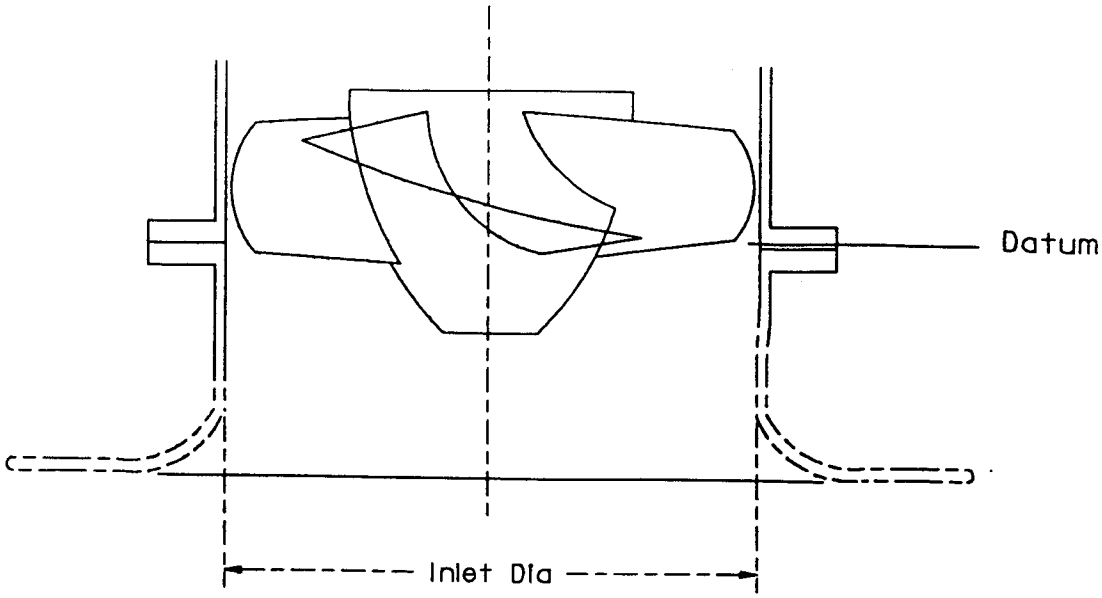

AXIAL FLOW PUMP

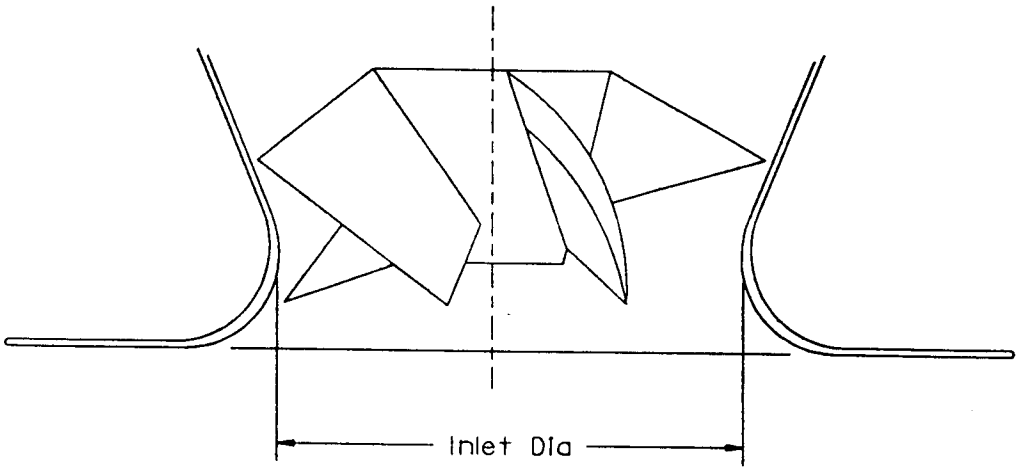

MIXED FLOW PUMP

FIGURE 3

BEARING RTD INSTALLATION

FIGURE 2

AXIAL FLOW PUMP
AND
MIXED FLOW PUMP

FIGURE 3

NOTE: Figures 2 and 3 exist as a PDF file (15131fgs.pdf) located in the COEASC directory on the CCB CD-ROM DISC_A. Windows Explorer and Adobe Acrobat Reader will provide the designer access to these figures.

-- End of Section --

SECTION 15192N

FUEL OIL PIPING
09/99

PART 1 GENERAL

1.1 REFERENCES

The publications listed below form a part of this specification to the extent referenced. The publications are referred to in the text by the basic designation only.

AMERICAN NATIONAL STANDARDS INSTITUTE (ANSI)

ANSI A13.1	(1996) Scheme for the Identification of Piping Systems

AMERICAN PETROLEUM INSTITUTE (API)

API STD 600	(1997) Steel Gate Valves - Flanged and Butt Welding Ends

ASME INTERNATIONAL (ASME)

ANSI/ASME B16.3	(1992) Malleable Iron Threaded Fittings
ASME/ANSI B16.5	(1996) Pipe Flanges and Flanged Fittings NPS 1/2 Through NPS 24
ASME/ANSI B16.9	(1993) Factory-Made Wrought Steel Buttwelding Fittings
ASME B16.11	(1996) Forged Fittings, Socket-Welding and Threaded
ASME/ANSI B16.39	(1986; R 1994) Malleable Iron Threaded Pipe Unions Classes 150, 250, and 300
ASME B31.1	(1995) Power Piping
ASME B31.3	(1996) Process Piping
ASME/ANSI B31.4	(1992) Liquid Transportation Systems for Hydrocarbons, Liquid Petroleum Gas, Anhydrous Ammonia, and Alcohols
ASME BPVC SEC VIII D1	(1995; Addenda 1995 and 1996) Boiler and Pressure Vessel Code: Section VIII Pressure Vessels, Division 1
ASME BPVC SEC IX	(1995; Addenda 1995 and 1996) Boiler and Pressure Vessel Code: Section IX Qualification Standard for Welding and Brazing Procedures, Welders, Brazers, and Welding and Brazing Operators

AMERICAN SOCIETY FOR TESTING AND MATERIALS (ASTM)

ASTM A 36/A 36M	(1996) Carbon Structural Steel
ASTM A 53	(1996) Pipe, Steel, Black and Hot-Dipped, Zinc-Coated Welded and Seamless

AMERICAN WELDING SOCIETY (AWS)

AWS A5.8	(1992) Filler Metals for Brazing and Braze Welding
ANSI/AWS Z49.1	(1994) Safety in Welding, Cutting and Allied Processes

U.S. GENERAL SERVICES ADMINISTRATION (GSA)

CID A-A-1689	(Rev. B) Tape, Pressure-Sensitive Adhesive, (Plastic Film)
CID A-A-50568	Gages, Liquid Level Measuring, Tank
FS WW-S-2739	Strainers, Sediment: Pipeline, Water, Air, Gas, Oil, or Steam

U.S. DEPARTMENT OF DEFENSE (DOD)

MIL-PRF-907	(Rev. E; Am. 2) Antiseize Thread Compound, High Temperature
MIL-C-19902	(Rev. C) Caps, Vent, Fuel Storage Tank
MIL-T-22361	(Am. 1) Thread Compound; Antiseize, Zinc Dust-Petrolatum
MIL-P-24441	(Rev. B; Supp. 1) Paint, Epoxy-Polyamide
MIL-T-27730	(Rev. A) Tape, Antiseize, Polytetrafluoroethylene, with Dispenser

MANUFACTURERS STANDARDIZATION SOCIETY OF THE VALVE AND FITTINGS INDUSTRY (MSS)

MSS SP-58	(1993) Pipe Hangers and Supports - Materials, Design and Manufacture
MSS SP-69	(1996) Pipe Hangers and Supports - Selection and Application
MSS SP-72	(1992) Ball Valves with Flanged or Butt-Welding Ends for General Service
MSS SP-80	(1997) Bronze Gate, Globe, Angle and Check Valves
MSS SP-110	(1996) Ball Valves Threaded, Socket-Welding, Solder Joint, Grooved and Flared Ends

NATIONAL FIRE PROTECTION ASSOCIATION (NFPA)

NFPA 30	(1996) Flammable and Combustible Liquids Code
NFPA 31	(1992) Installation of Oil Burning Equipment
NFPA 70	(1996) National Electrical Code
NFPA 780	(1995) Lightning Protection Code

THE SOCIETY FOR PROTECTIVE COATINGS (SSPC)

SSPC SP 10	(1994) Near-White Blast Cleaning
SSPC Paint 20	(1991) Zinc-Rich Primers (Type I, "Inorganic," and Type II, "Organic")

UNDERWRITERS LABORATORIES (UL)

UL 842	(1997; R 1997) Valves for Flammable Fluids

1.2 RELATED REQUIREMENTS

Section 15050N, "Basic Mechanical Material and Methods" applies to this section with additions and modifications specified herein.

1.3 DEFINITIONS

1.3.1 Carrier Piping

Piping which contains fuel oil, exclusively.

1.3.2 Secondary Containment System

System which contains carrier piping and prevents fuel leakage from carrier piping into surrounding soil and/or water. System may be either boxed-in trench or double-walled piping.

1.4 SUBMITTALS

Submit the following in accordance with Section 01330, "Submittal Procedures."

SD-03 Product Data

Pipe and fittings G

Valves G

Flexible hose G

Dielectric unions G

Strainers G

Storage tanks

Leak detection system

SD-06 Test Reports

SD-07 Certificates

Welding procedure

Qualification of welders

List of welder's names and symbols

Flexible hose

Dielectric unions

Tank surface preparation

Coating materials

Coating application procedure

SD-08 Manufacturer's Instructions

Leak detection system

SD-10 Operation and Maintenance Data

Leak detection system, Data Package 3

Submit operation and maintenance data in accordance with Section 01781N, "Operation and Maintenance Data."

1.5 QUALITY ASSURANCE

1.5.1 Welding Procedure

Before performing welding, submit three copies of welding procedure specification for metals included in the work, together with proof of its qualifications as outlined in ASME B31.1.

1.5.2 Qualification of Welders

Before welder or operator performs welding, submit to the Contracting Officer three copies of the Welder's Performance Qualification Record in conformance with ASME B31.1 showing that the welder was tested under the approved procedure specification submitted by the Contractor.

1.5.3 List of Welder's Names and Symbols

Submit each welder's assigned number, letter, or symbol which shall be used to identify the work of the welder and shall be affixed immediately upon completion of the weld.

1.5.4 Defective Welds

Welders making defective welds after passing a qualification test shall be required to take a re-qualification test. Welders failing the re-qualification tests will not be permitted to work under this contract.

1.5.5 Previous Welder Qualifications

Welding procedures, welders, and welding operators previously qualified by test may be accepted for this contract without re-qualification, subject to approval by the Contracting Officer provided that all the conditions specified in ASME B31.1 are met before a procedure can be used.

1.6 WELDING SAFETY

ANSI/AWS Z49.1.

1.7 REGISTRATION

Contractor shall obtain required tank registration or permit/approval application forms from governing regulatory agencies. Furnish completed forms to the Contracting Officer and the installation environmental office within 10 days after contract award for their submission to the regulatory agency.

PART 2 PRODUCTS

2.1 MATERIALS AND EQUIPMENT

2.1.1 Steel Pipe and Fittings

2.1.1.1 Pipe

ASTM A 53, Schedule 80, black steel, seamless.

2.1.1.2 Threaded and Socket-Welding Fittings

ASME B16.11, forged steel, Class 2000.

2.1.1.3 Threaded Fittings

ANSI/ASME B16.3, black malleable iron, Class 150.

2.1.1.4 Butt-Welding Fittings

ASME/ANSI B16.9, Class 150. Backing rings shall conform to ASME B31.3 and be compatible with materials being welded.

2.1.1.5 Flanges and Flange Fittings

ASME/ANSI B16.5, steel flanges or convoluted steel flanges which meet the criteria of ASME BPVC SEC VIII D1. Flange faces shall have integral grooves of rectangular cross section which afford containment for self-energizing gasket material.

2.1.2 Vent Piping

ASTM A 53 standard weight, zinc-coated steel with zinc-coated malleable iron fittings ANSI/ASME B16.3.

2.1.3 Valves

2.1.3.1 Bronze Gate Valves

MSS SP-80 Class 125, 2 inches and smaller, wedge disk, nonrising stem.

2.1.3.2 Steel Gate Valves

API STD 600, oil service, Class 150.

2.1.3.3 Ball Valves

MSS SP-72 for flanged or butt-welding ends and MSS SP-110 for threaded, socket-welding, solder joint, grooved and flared ends.

2.1.3.4 Relief Valves

UL 842, steel or bronze bodies, corrosion-resistant valve seats, and positive closing to prevent leakage.

2.1.3.5 Check Valves

MSS SP-80, Class 125, bronze body, suitable for fuel oil service with bronze disc.

2.1.3.6 Plug Valves

Bronze, PTFE seat, non-lubricated full port, square head, UL listed.

2.1.4 Piping Accessories

2.1.4.1 Flexible Hose

Flexible metal hose, corrugated type with braided wire sheath covering, close-pitch annular corrugations, rated for a working pressure of at least 125 psig, 8 inch minimum live length, screwed end connections, UL listed for flammable liquid service. Metal for hose and braided wire sheath shall be stainless steel, any type of ASTM 300-series.

2.1.4.2 Unions

ASME/ANSI B16.39, Class 150 pound.

a. Dielectric Unions: Union comprised of steel female pipe thread end and copper solder-joint end conforming to dimensional, strength, and pressure requirements of ASME/ANSI B16.39, Class 1. Steel parts shall be galvanized or plated. Union shall have a water-impervious insulation barrier capable of limiting galvanic current to one percent of the short-circuit current in a corresponding bimetallic joint. When dry, it shall be able to withstand a 600-volt breakdown test.

2.1.4.3 Welding Filler Metal

ASME/ANSI B31.4 and compatible with the materials to be welded.

2.1.4.4 Brazing Filler Metal

AWS A5.8, silver base alloy, with melting point not less than 1100 degrees F.

2.1.4.5 Hangers, Supports, and Shields

Design, selection, fabrication, installation, and spacing shall conform to MSS SP-58 and MSS SP-69. Hangers, supports, rods, anchors, nuts, bolts,

and washers shall be hot-dip galvanized. Hangers and supports shall be of the adjustable type.

2.1.4.6 Strainers

FS WW-S-2739 single basket type, with inlet and outlet on the same center line. Cast steel or fabricated steel body, 40 by 40 mesh ASTM 300-series stainless steel baskets. Open area of one basket shall be 2 1/2-times inlet or outlet piping area. Furnish one spare basket.

2.1.4.7 Identification for Piping Aboveground

Labels for pipes 3/4 inch diameter and larger shall bear printed legends to identify contents of pipes and arrows to show direction of flow. Labels shall have color coded background to signify levels of hazard in accordance with ANSI A13.1. Legends and type and size of characters shall also conform to ANSI A13.1. Make labels of plastic sheet CID A-A-1689 with pressure sensitivity suitable for intended applications, or they may be premolded of plastic to fit over pipe. For pipes smaller than 3/4 inch diameter, provide brass identification tags 1 1/2 inches in diameter with legends in depressed black filled characters.

2.1.4.8 Miscellaneous Metal

ASTM A 36/A 36M, standard mill finished structural shapes, hot-dip galvanized after fabrication.

2.1.5 Instruments

2.1.5.1 Tank Gages

CID A-A-50568, buoyant force type with direct reading dial.

2.1.6 Protective Coating Materials for Aboveground Pipe and Tanks

Coatings shall be the products of one manufacturer and coating application procedure shall be in accordance with manufacturer's instruction. Tank surface preparation shall be abrasive blast clean steel surfaces in accordance with SSPC SP 10 to a surface profile of 1/2 to 2 mils.

2.1.6.1 External Coatings

Protect aboveground piping and steel tanks against atmospheric corrosion with a coat of organic, lead and chromate free, zinc-rich primer conforming to SSPC Paint 20, Type II applied to a minimum dry film thickness of 4 mils and finish with two coats of epoxy-polyamide topcoat conforming to MIL-P-24441. Apply a gray first topcoat conforming to MIL-P-24441/2, Formula 151 applied to a minimum dry film thickness of 3 mils and finish with a white second topcoat conforming to MIL-P-24441/3, Formula 152 applied to a minimum dry film thickness of 3 mils resulting in a total system minimum dry film thickness of 11 mils.

2.2 FUEL OIL STORAGE TANKS AND ACCESSORIES

2.2.1 Fuel Oil Storage Tanks

Construct Fuel Oil Aboveground Tanks, Protected Type, Secondary Containment with Vehicle Impact and Projectile Resistance. A UL 2085 label must be permanently affixed to the tank; other third-party testing labels are not

acceptable. Unit must comply with all provisions of U.F.C. 79-7, Appendix A-II-F. The tank and its enclosure shall be a completed unit at the factory.

2.2.2 Design, Construction, and Testing of Fuel Oil Tanks

a. The primary tank shall be rectangular in shape, constructed with a minimum of 10 gauge thick carbon steel, listed per U.L. Standard 142, and meet the requirements of NFPA 30. Welds shall be continuous on all sides, conforming with the American Welding Society Standard for continuous weld. The primary tank shall be fitted with: a 4 or 6 inch Fill Port, a 2 inch Normal Vent Port, either a 4, 6, 8, or 10 inch Emergency Vent Port, a 2 inch Liquid Gauging Port, 2 inch Port for Dispensing Pump, a 4 inch Phase 1 Vapor Recovery Port, and a minimum 18 inch manway (for tanks with capacities 5,000 gallons and greater). The tank shall be warranted for a minimum of 20 years by the manufacturer. The primary tank shall be pressure tested to UL 142 standard (minimum 3 to maximum 5 psi) at the factory.

b. The concrete encasement shall be 6 inches thick with a minimum design strength of 4000 psi. Concrete enclosure shall encase and protect both the primary steel tank and the secondary containment. The concrete design shall include the following for long term durability: less than 3% air entrainment, water-reducing admixture, and steel reinforcing bars. Concrete placement shall be monolithic (without seams) and placement methods shall ensure the absence of voids on all sides and beneath the steel tank. A mid-level seam or other joint construction which could compromise the liquid tightness (secondary containment) and fire protection capability is not permitted.

c. The tank system shall be designed and tested to provide 2 hour fire protection for the primary tank as per UL 2085 2 hour furnace fire test and 2 hour simulated pool fire test. No steel members shall penetrate the walls or floor of the concrete encasement to assure isolation from pool fire heat.

d. The tank construction shall include thermal insulation equivalent to .25 inches of polystyrene to protect against temperature extremes, and to protect against corrosion by isolating the steel tank from the concrete or other corrosive material. All steel exterior to the concrete encasement shall be anti-oxidant powder coated to inhibit corrosion and meet ASTM B117.

e. The secondary leak containment tank shall be rectangular in design and listed according to UL 2085 insulated secondary aboveground tanks for flammable and combustible liquids, protected type. The secondary tank shall be tested liquid tight at the factory (minimum 3 to maximum 5 psi), and shall also be tested by the Contractor to a maximum 3 psi. The secondary tank shall provide true 360 degree radius "pressure testable" containment for the primary tank. The secondary tank shall be fitted with a 2 inch Annular Space Monitoring Tube, a 2 inch Normal Vent Port and either a 4, 6, 8 or 10 inch Emergency Vent Port, in addition to openings for all ports in the primary tank. The port openings in the top of the secondary tank shall be constructed with full welds to prevent moisture from seeping between the fire proofing material and secondary and primary tanks. The top of the

secondary tank shall be sloped so that water will not accumulate on top of the tank. The secondary tank shall have a two (2) inch monitoring port including a tube which provides a means to detect product leakage from the primary tank into fire protection material that directly surrounds the primary tank. This design shall be listed under UL 2085.

f. The tank system shall include a UL listed 7 gallon spill/overfill container manufactured as an integral part of the primary tank, surrounding the fill pipe, and protected by the 2 hour fire rating of the enclosure. The spill/overfill container shall include a stick port and normally closed valve to release spilled product into the main tank. Exterior steel shall be anti-oxidant powder coated to inhibit rust.

g. Overfill protection shall be provided by the following methods:

1. Direct reading level gauge visible from fill pipe access
2. Valve rated for pressurized delivery located within fill pipe to close automatically at 95% full level.

h. The exterior surface of the secondary tank shall be cleaned of foreign material and coated with a corrosion resistant industrial paint (3 to 5 mils dry film thickness). The standard color shall be desert sand.

i. Tanks shall be marked on all sides as per state and local codes.

j. Tank system shall include a 2 inch atmospheric vent and emergency venting in accordance with NFPA 30.

k. Galvanized, OSHA compliant steps and handrails must be supplied with any tank of a capacity greater than 500 gallons.

2.2.3 Connections to Fuel Oil Tanks

Provide the following connections:

a. Goose-neck vent caps or caps conforming to MIL-C-19902.

b. Fill lines with removable single strainer and locking fill boxes.

c. A sounding connection, to permit entry of the gaging rod, with a locking cap. Provide graduated gaging rod and calibration chart.

d. Pump suction lines with internal vertical pipes and foot valve extending to within 4 inches of tank bottom.

e. Fuel oil supply, return, fill and vent piping utilizing swing joint elbows to allow for ample tank movement and pipe expansion. Drain piping into tank when pump is shut-off.

f. Flexible hose connections for vibration isolation of oil burning equipment.

g. On steel tanks weld a 12 by 12 by 1/4 inch steel striker plate under gage and fill lines.

h. Nylon dielectric bushings on pipe connections to steel tanks.

i. Ball float valves on vent lines to restrict flow into tank when the tank reaches 90 percent full.

j. Automatic high level alarm with setting of approximately 95 percent and 98 percent of tank capacity. Audible alarm shall sound locally at tank, and alarm signal shall be transmitted to remote locations as indicated.

2.2.4 Monitoring System to Detect Fuel Oil and Water Leaks

Provide an electrical or electronic control center in accordance with Section 13216N, "Underground Petroleum Tanks." Automatic line leak detection system for pressurized piping shall detect leaks of 3 gallons per hour at 10 pounds per square inch line pressure within 1 hour.

Interstitial monitoring system in secondary containment shall include sensor probes located in the low point sump of the secondary containment system as indicated. The collection sumps shall include the following:

a. A lid designed to prevent surface water from draining down into the sump.

b. A vent which will allow any collection of vapors to escape.

c. Sufficient strength to keep out the surrounding backfill material.

Probes shall measure at least 0.125 inches of oil on water. Probes shall meet NFPA 70, Class 1, Division 1, Group D hazardous location requirements.

PART 3 EXECUTION

3.1 INSTALLATION

Contractor shall provide installation of fuel oil piping system in accordance with applicable Federal, State, regional or local regulations.

3.1.1 Fuel Oil Piping System

Install piping in out-of-the-way locations, in a manner that will minimize cutting of beams, girders, columns, or load-bearing members. Installation of oil piping and equipment in buildings shall conform to NFPA 30 and NFPA 31, except as indicated or specified herein.

3.1.2 Pipe Sleeves and Plates

Provide sleeves where piping passes through walls, floors, roofs, and partitions. Secure sleeves in proper position and location during construction. Provide sleeves of sufficient length to pass through entire thickness of walls, floors, roofs, and partitions. Extend sleeves in floor slabs 3 inches above the finished floor. Provide not less than 1/4 inch space between exterior of piping or pipe insulation and interior of sleeve. Firmly pack space with insulation and calk at both ends of the sleeve with plastic waterproof cement which will dry to a firm but pliable mass, or provide a segmented elastomeric seal. Secure plates to pipes at sleeves.

3.1.3 Steel Piping

Steel piping 2 inches and smaller shall be threaded or socket-welded.

Steel piping 2 1/2 inches and larger shall be buttwelded. Flanges may be used for valves and equipment installation. Piping joints shall conform to ASME B31.3. Direct buried piping connections shall be welded.

3.1.4 Threaded Joints in Piping

Provide lubricant or polytetrafluoroethylene tape conforming to MIL-T-27730 on male threads of screwed joints. Red or white lead and zinc compound conforming to MIL-T-22361 may be used. Lubricate threaded pipe joints, as well as bolts and studs used on high temperature pipe joints up to 1050 degrees F, with anti-seize compound in accordance with MIL-PRF-907. Piping shall be free from fins and burrs. Ream or file out pipe ends to size of bore and remove chips. Attach screwed flanges by screwing the pipe through the flange, and reface pipe and flange accurately.

3.1.5 Welding

3.1.5.1 Welding of Piping

Welding of joints in piping, butt welds, fillet welds, bends, loops, offsets, and cleaning of pipe shall be in accordance with ASME B31.1. Welds shall be visually examined and meet acceptance standards specified in Chapter VI of ASME B31.1.

3.1.5.2 Quality of Welds

Quality of welds, correction of defects, stress relieving, and preheating shall be in accordance with ASME B31.1.

3.1.5.3 Arc Welding and Gas Welding

In accordance with ASME BPVC SEC IX.

3.1.6 Unions and Flanges

Place unions and flanges where necessary to permit easy disconnection of piping and apparatus. Each connection having a threaded end valve shall have a union.

3.1.7 Valves

Install valves in positions accessible for operation and repair.

3.1.8 Fuel Oil Storage Tanks

Install storage tanks, vents and other connections in accordance with NFPA 30, NFPA 31, recommendations and published instructions of the manufacturer, and as indicated. Provide grounding of tanks directly through ground rods or through bonding to grounded network in accordance with NFPA 780. Fasten aboveground fuel oil tanks on a firm reinforced concrete foundation designed to support the fully loaded tank. Provide fireproofed steel supports between tank and foundation. Tanks shall be marked on all sides with warning signs "FLAMMABLE" or "COMBUSTIBLE", "NO SMOKING", product identification, and other signs as required by applicable codes.

3.2 FIELD QUALITY CONTROL

Prior to application of test pressure, remove or valve off piping

components which may be damaged by test and install a calibrated test gage in the system. Maintain test pressure for at least one hour. In the event of leakage, locate and repair leak by rewelding and repeat test. Materials and equipment shall be subject to inspection at the installation site by the Contracting Officer.

3.2.1 Piping Test

Before backfilling of pipe trenches, perform hydrostatic test of fuel oil piping at 1 1/2 times system pressure or 100 psig whichever is greater.

3.2.2 Steel Fuel Oil Storage Tanks

Test tanks for leaks by applying internal air pressure and using soapsuds, linseed oil or equivalent material on external welds. For horizontal tanks, test pressure shall be not less than 3 nor more than 5 psig. During testing, tank shall be provided with a suitable pressure relief device.

3.2.3 Leak Detection

Test the leak detection monitoring system in accordance with the manufacturer's testing procedure.

3.3 ELECTRICAL WORK

Electrical work shall be in accordance with applicable codes and shall be rated for hazardous area as required. Tanks shall be electrically grounded in accordance with NFPA 780.

-- End of Section --

SECTION 15400A

PLUMBING, GENERAL PURPOSE
02/01

PART 1 GENERAL

1.1 REFERENCES

The publications listed below form a part of this specification to the extent referenced. The publications are referred to in the text by basic designation only.

AMERICAN SOCIETY FOR TESTING AND MATERIALS (ASTM)

ASTM A 53/A 53M	(1999b) Pipe, Steel, Black and Hot-Dipped, Zinc-Coated, Welded and Seamless
ASTM A 74	(1998) Cast Iron Soil Pipe and Fittings
ASTM A 105/A 105M	(1998) Carbon Steel Forgings for Piping Applications
ASTM A 193/A 193M	(1999a) Alloy-Steel and Stainless Steel Bolting Materials for High-Temperature Service
ASTM A 515/A 515M	(1989; R 1997) Pressure Vessel Plates, Carbon Steel, for Intermediate- and Higher-Temperature Service
ASTM A 516/A 516M	(1990; R 1996) Pressure Vessel Plates, Carbon Steel, for Moderate- and Lower-Temperature Service
ASTM A 733	(1999) Welded and Seamless Carbon Steel and Austenitic Stainless Steel Pipe Nipples
ASTM A 888	(1998el) Hubless Cast Iron Soil Pipe and Fittings for Sanitary and Storm Drain, Waste, and Vent Piping Applications
ASTM B 32	(1996) Solder Metal
ASTM B 42	(1998) Seamless Copper Pipe, Standard Sizes
ASTM B 88	(1999) Seamless Copper Water Tube
ASTM B 88M	(1999) Seamless Copper Water Tube (Metric)
ASTM B 370	(1998) Copper Sheet and Strip for Building Construction
ASTM B 813	(1993) Liquid and Paste Fluxes for Soldering Applications of Copper and Copper Alloy Tube

ASTM B 828	(1998) Making Capillary Joints by Soldering of Copper and Copper Alloy Tube and Fittings
ASTM C 564	(1997) Rubber Gaskets for Cast Iron Soil Pipe and Fittings
ASTM C 920	(1998) Elastomeric Joint Sealants
ASTM D 2000	(1999) Rubber Products in Automotive Applications
ASTM D 3139	(1998) Joints for Plastic Pressure Pipes Using Flexible Elastomeric Seals
ASTM D 3212	(1996a) Joints for Drain and Sewer Plastic Pipes Using Flexible Elastomeric Seals
ASTM D 3308	(1997) PTFE Resin Skived Tape
ASTM F 477	(1999) Elastomeric Seals (Gaskets) for Joining Plastic Pipe

ASME INTERNATIONAL (ASME)

ASME A112.1.2	(1991; R 1998) Air Gaps in Plumbing Systems
ASME A112.21.1M	(1991; R 1998) Floor Drains
ASME B1.20.1	(1983; R 1992) Pipe Threads, General Purpose (Inch)
ASME B16.3	(1998) Malleable Iron Threaded Fittings
ASME B16.5	(1996; B16.5a) Pipe Flanges and Flanged Fittings NPS 1/2 thru NPS 24
ASME B16.12	(1998) Cast Iron Threaded Drainage Fittings
ASME B16.15	(1985; R 1994) Cast Bronze Threaded Fittings Classes 125 and 250
ASME B16.18	(1984; R 1994) Cast Copper Alloy Solder Joint Pressure Fittings
ASME B16.21	(1992) Nonmetallic Flat Gaskets for Pipe Flanges
ASME B16.22	(1995; B16.22a1998) Wrought Copper and Copper Alloy Solder Joint Pressure Fittings
ASME B16.24	(1991; R 1998) Cast Copper Alloy Pipe Flanges, Class 150, 300, 400, 600, 900, 1500, and 2500, and Flanged Fittings, Class 150 and 300
ASME B16.34	(1997) Valves - Flanged, Threaded, and Welding End

ASME B16.39	(1998) Malleable Iron Threaded Pipe Unions Classes 150, 250, and 300
ASME B31.5	(1992; B31.5a1994) Refrigeration Piping
ASME B40.1	(1991) Gauges - Pressure Indicating Dial Type - Elastic Element

AMERICAN SOCIETY OF SANITARY ENGINEERING (ASSE)

ASSE 1001	(1990) Pipe Applied Atmospheric Type Vacuum Breakers
ASSE 1011	(1995) Hose Connection Vacuum Breakers
ASSE 1012	(1995) Backflow Preventers with Intermediate Atmospheric Vent
ASSE 1013	(1993) Reduced Pressure Principle Backflow Preventers
ASSE 1020	(1998) Pressure Vacuum Breaker Assembly (Recommended for Outdoor Usage)

AMERICAN WATER WORKS ASSOCIATION (AWWA)

AWWA EWW	(1999) Standard Methods for the Examination of Water and Wastewater
AWWA B300	(1999) Hypochlorites
AWWA B301	(1992; Addenda B301a - 1999) Liquid Chlorine
AWWA C203	(1997; addenda C203a - 1999) Coal-Tar Protective Coatings and Linings for Steel Water Pipelines - Enamel and Tape - Hot-Applied
AWWA C606	(1997) Grooved and Shouldered Joints
AWWA M20	(1973) Manual: Water Chlorination Principles and Practices

AMERICAN WELDING SOCIETY (AWS)

AWS A5.8	(1992) Filler Metals for Brazing and Braze Welding
AWS B2.2	(1991) Brazing Procedure and Performance Qualification

CAST IRON SOIL PIPE INSTITUTE (CISPI)

CISPI 301	(1997) Hubless Cast Iron Soil Pipe and Fittings for Sanitary and Storm Drain, Waste, and Vent Piping Applications
CISPI 310	(1997) Coupling for Use in Connection with

	Hubless Cast Iron Soil Pipe and Fittings for Sanitary and Storm Drain, Waste, and Vent Piping Applications
CISPI HSN-85	(1985) Neoprene Rubber Gaskets for Hub and Spigot Cast Iron Soil Pipe and Fittings

U.S. NATIONAL ARCHIVES AND RECORDS ADMINISTRATION (NARA)

PL 93-523	(1974; Amended 1986) Safe Drinking Water Act

COPPER DEVELOPMENT ASSOCIATION (CDA)

CDA Tube Handbook	(1995) Copper Tube Handbook

FOUNDATION FOR CROSS-CONNECTION CONTROL AND HYDRAULIC RESEARCH (FCCCHR)

FCCCHR-01	(1993) Manual of Cross-Connection Control

INTERNATIONAL CODE COUNCIL (ICC)

ICC Plumbing Code	(2000) International Plumbing Code (IPC)

MANUFACTURERS STANDARDIZATION SOCIETY OF THE VALVE AND FITTINGS INDUSTRY (MSS)

MSS SP-25	(1998) Standard Marking System for Valves, Fittings, Flanges and Unions
MSS SP-58	(1993) Pipe Hangers and Supports - Materials, Design and Manufacture
MSS SP-67	(1995) Butterfly Valves
MSS SP-69	(1996) Pipe Hangers and Supports - Selection and Application
MSS SP-70	(1998) Cast Iron Gate Valves, Flanged and Threaded Ends
MSS SP-71	(1997) Cast Iron Swing Check Valves, Flanges and Threaded Ends
MSS SP-72	(1999) Ball Valves with Flanged or Butt-Welding Ends for General Service
MSS SP-73	(1991; R 1996) Brazing Joints for Copper and Copper Alloy Pressure Fittings
MSS SP-78	(1998) Cast Iron Plug Valves, Flanged and Threaded Ends
MSS SP-80	(1997) Bronze Gate, Globe, Angle and Check Valves
MSS SP-83	(1995) Class 3000 Steel Pipe Unions Socket-Welding and Threaded

MSS SP-85	(1994) Cast Iron Globe & Angle Valves, Flanged and Threaded Ends
MSS SP-110	(1996) Ball Valves Threaded, Socket-Welding, Solder Joint, Grooved and Flared Ends

PLUMBING-HEATING-COOLING CONTRACTORS NATIONAL ASSOCIATION (NAPHCC)

NAPHCC Plumbing Code	(1996) National Standard Plumbing Code

NATIONAL ELECTRICAL MANUFACTURERS ASSOCIATION (NEMA)

NEMA 250	(1997) Enclosures for Electrical Equipment (1000 Volts Maximum)

NSF INTERNATIONAL (NSF)

NSF 61	(1999) Drinking Water System Components - Health Effects (Sections 1-9)

SOCIETY OF AUTOMOTIVE ENGINEERS INTERNATIONAL (SAE)

SAE J 1508	(1997) Hose Clamps

1.2 STANDARD PRODUCTS

Specified materials and equipment shall be standard products of a manufacturer regularly engaged in the manufacture of such products. Specified equipment shall essentially duplicate equipment that has performed satisfactorily at least two years prior to bid opening.

1.3 ELECTRICAL WORK

Motors, motor controllers and motor efficiencies shall conform to the requirements of Section 16415 ELECTRICAL WORK, INTERIOR. Electrical motor-driven equipment specified herein shall be provided complete with motors. Equipment shall be rated at 60 Hz, single phase, ac unless otherwise indicated. Where a motor controller is not provided in a motor-control center on the electrical drawings, a motor controller shall be as indicated. Motor controllers shall be provided complete with properly sized thermal-overload protection in each ungrounded conductor, auxiliary contact, and other equipment, at the specified capacity, and including an allowable service factor.

1.4 SUBMITTALS

Government approval is required for submittals with a "G" designation; submittals not having a "G" designation are for information only. When used, a designation following the "G" designation identifies the office that will review the submittal for the Government. The following shall be submitted in accordance with Section 01330 SUBMITTAL PROCEDURES:

SD-02 Shop Drawings

Electrical Schematics; G, AE.

Complete electrical schematic lineless or full line

interconnection and connection diagram for each piece of mechanical equipment having more than one automatic or manual electrical control device.

SD-03 Product Data

Plumbing Fixture Schedule; G, AE.

Catalog cuts of pumps, valves, related piping system and system location where installed.

SD-06 Test Reports

Tests, Flushing and Disinfection; G, AE.

Test reports in booklet form showing all field tests performed to adjust each component and all field tests performed to prove compliance with the specified performance criteria, completion and testing of the installed system. Each test report shall indicate the final position of controls.

Backflow Prevention Assembly Tests; G, AE..

Certification of proper operation shall be as accomplished in accordance with state regulations by an individual certified by the state to perform such tests. If no state requirement exists, the Contractor shall have the manufacturer's representative test the device, to ensure the unit is properly installed and performing as intended. The Contractor shall provide written documentation of the tests performed and signed by the individual performing the tests.

SD-07 Certificates

Materials and Equipment; G, AE.

Where materials or equipment are specified to comply with requirements of AGA, ASME, or NSF proof of such compliance shall be included. The label or listing of the specified agency will be acceptable evidence. In lieu of the label or listing, a written certificate may be submitted from an approved, nationally recognized testing organization equipped to perform such services, stating that the items have been tested and conform to the requirements and testing methods of the specified agency. Where equipment is specified to conform to requirements of the ASME Boiler and Pressure Vessel Code, the design, fabrication, and installation shall conform to the code.

SD-10 Operation and Maintenance Data

Sump Pumps; G, AE

Six copies of the operation manual outlining the step-by-step procedures required for startup, operation and shutdown. The manual shall include the manufacturer's name, model number, service manual, parts list, and brief description of all equipment and their basic operating features. Six copies of the maintenance manual listing routine maintenance procedures, possible breakdowns and repairs. The manual shall include simplified wiring and

control diagrams of the system as installed.

1.5 PERFORMANCE REQUIREMENTS

1.6 REGULATORY REQUIREMENTS

Plumbing work shall be in accordance with ICC Plumbing Code.

1.7 PROJECT/SITE CONDITIONS

The Contractor shall become familiar with details of the work, verify dimensions in the field, and advise the Contracting Officer of any discrepancy before performing any work.

PART 2 PRODUCTS

2.1 MATERIALS

Materials for various services shall be in accordance with TABLES I and II. Pipe schedules shall be selected based on service requirements. Pipe fittings shall be compatible with the applicable pipe materials. Pipe threads (except dry seal) shall conform to ASME B1.20.1. Material or equipment containing lead shall not be used in any potable water system. In line devices such as water meters, building valves, check valves, meter stops, valves, fittings and back flow preventers shall comply with PL 93-523 and NSF 61, Section 8. Hubless cast-iron soil pipe shall not be installed underground, under concrete floor slabs, or in crawl spaces below kitchen floors.

2.1.1 Pipe Joint Materials

a. Coupling for Cast-Iron Pipe: for hub and spigot type ASTM A 74, AWWA C606. For hubless type: CISPI 310

b. Coupling for Steel Pipe: AWWA C606.

c. Flange Gaskets: Gaskets shall be made of non-asbestos material in accordance with ASME B16.21. Gaskets shall be flat, 1/16 inch thick, and contain Aramid fibers bonded with Styrene Butadiene Rubber (SBR) or Nitro Butadiene Rubber (NBR). Gaskets shall be the full face or self centering flat ring type. Gaskets used for hydrocarbon service shall be bonded with NBR.

d. Neoprene Gaskets for Hub and Cast-Iron Pipe and Fittings: CISPI HSN-85.

e. Brazing Material: Brazing material shall conform to AWS A5.8, BCuP-5.

f. Brazing Flux: Flux shall be in paste or liquid form appropriate for use with brazing material. Flux shall be as follows: lead-free; have a 100 percent flushable residue; contain slightly acidic reagents; contain potassium borides; and contain fluorides.

g. Solder Material: Solder metal shall conform to ASTM B 32.

h. Solder Flux: Flux shall be liquid form, non-corrosive, and conform to ASTM B 813, Standard Test 1.

i. PTFE Tape: PTFE Tape, for use with Threaded Metal or Plastic Pipe, ASTM D 3308.

j. Rubber Gaskets for Cast-Iron Soil-Pipe and Fittings (hub and spigot type and hubless type): ASTM C 564.

k. Rubber Gaskets for Grooved Pipe: ASTM D 2000, maximum temperature 230 degrees F.

l. Flexible Elastomeric Seals: ASTM D 3139, ASTM D 3212 or ASTM F 477.

m. Flanged fittings including flanges, bolts, nuts, bolt patterns, etc., shall be in accordance with ASME B16.5 class 150 and shall have the manufacturer's trademark affixed in accordance with MSS SP-25. Flange material shall conform to ASTM A 105/A 105M. Blind flange material shall conform to ASTM A 516/A 516M cold service and ASTM A 515/A 515M for hot service. Bolts shall be high strength or intermediate strength with material conforming to ASTM A 193/A 193M.

2.1.2 Miscellaneous Materials

Miscellaneous materials shall conform to the following:

a. Copper, Sheet and Strip for Building Construction: ASTM B 370.

b. Hose Clamps: SAE J 1508.

c. Coal-Tar Protective Coatings and Linings for Steel Water Pipelines:

AWWA C203.

d. Hypochlorites: AWWA B300.

e. Liquid Chlorine: AWWA B301.

f. Gauges - Pressure and Vacuum Indicating Dial Type - Elastic Element: ASME B40.1.

2.1.3 Pipe Insulation Material

Insulation shall be as indicated on the drawings.

2.2 PIPE HANGERS, INSERTS, AND SUPPORTS

Pipe hangers, inserts, and supports shall conform to MSS SP-58 and MSS SP-69.

2.3 VALVES

Valves shall be provided on supplies to equipment and fixtures. Valves 2-1/2 inches and smaller shall be bronze with threaded bodies for pipe and solder-type connections for tubing. Valves 3 inches and larger shall have flanged iron bodies and bronze trim. Pressure ratings shall be based upon the application. Grooved end valves may be provided if the manufacturer certifies that the valves meet the performance requirements of applicable MSS standard. Valves shall conform to the following standards:

Description	Standard
Butterfly Valves	MSS SP-67
Cast-Iron Gate Valves, Flanged and Threaded Ends	MSS SP-70
Cast-Iron Swing Check Valves, Flanged and Threaded Ends	MSS SP-71
Ball Valves with Flanged Butt-Welding Ends for General Service	MSS SP-72
Ball Valves Threaded, Socket-Welding, Solder Joint, Grooved and Flared Ends	MSS SP-110
Cast-Iron Plug Valves, Flanged and Threaded Ends	MSS SP-78
Bronze Gate, Globe, Angle, and Check Valves	MSS SP-80
Steel Valves, Socket Welding and Threaded Ends	ASME B16.34
Cast-Iron Globe and Angle Valves, Flanged and Threaded Ends	MSS SP-85

2.3.1 Wall Faucets

Wall faucets with vacuum-breaker backflow preventer shall be brass with 3/4 inch male inlet threads, hexagon shoulder, and 3/4 inch hose connection. Faucet handle shall be securely attached to stem.

2.3.2 Wall Hydrants

Wall hydrants with vacuum-breaker backflow preventer shall have a nickel-brass or nickel-bronze wall plate or flange with nozzle and detachable key handle. A brass or bronze operating rod shall be provided within a galvanized iron casing of sufficient length to extend through the wall so that the valve is inside the building, and the portion of the hydrant between the outlet and valve is self-draining. A brass or bronze valve with coupling and union elbow having metal-to-metal seat shall be provided. Valve rod and seat washer shall be removable through the face of the hydrant. The hydrant shall have 3/4 inch exposed hose thread on spout and 3/4 inch male pipe thread on inlet.

2.4 BACKFLOW PREVENTERS

Backflow preventers shall be approved and listed by the Foundation For Cross-Connection Control & Hydraulic Research. Reduced pressure principle assemblies, double check valve assemblies, atmospheric (nonpressure) type vacuum breakers, and pressure type vacuum breakers shall be tested, approved, and listed in accordance with FCCCHR-01. Backflow preventers with intermediate atmospheric vent shall conform to ASSE 1012. Reduced pressure principle backflow preventers shall conform to ASSE 1013. Hose connection vacuum breakers shall conform to ASSE 1011. Pipe applied atmospheric type vacuum breakers shall conform to ASSE 1001. Pressure vacuum breaker assembly shall conform to ASSE 1020. Air gaps in plumbing systems shall conform to ASME A112.1.2.

2.5 DRAINS

2.5.1 Floor Drains

Floor drains shall consist of a galvanized body, integral seepage pan, and adjustable perforated or slotted chromium-plated bronze, nickel-bronze, or nickel-brass strainer, consisting of grate and threaded collar. Floor drains shall be cast iron except where metallic waterproofing membrane is installed. Drains shall be of double drainage pattern for embedding in the floor construction. The seepage pan shall have weep holes or channels for drainage to the drainpipe. The strainer shall be adjustable to floor thickness. A clamping device for attaching flashing or waterproofing membrane to the seepage pan without damaging the flashing or waterproofing membrane shall be provided when required. Drains shall be provided with threaded connection. Between the drain outlet and waste pipe, a neoprene rubber gasket conforming to ASTM C 564 may be installed, provided that the drain is specifically designed for the rubber gasket compression type joint. Floor drains shall conform to ASME A112.21.1M.

2.6 PUMPS

2.6.1 Submersible Sump Pumps

Sump pumps shall be of capacities indicated. The pumps shall be of the automatic, electric motor-driven, submerged type, complete with necessary control equipment and with a split or solid cast-iron or steel cover plate. Pumps shall be capable of handling 4 inch solids and grit. The pumps shall be direct-connected by an approved flexible coupling to a vertical electric motor having a continuous oiling device or packed bearings sealed against dirt and moisture. Motors shall be totally enclosed, of sizes as indicated. Across-the-line magnetic controller shall be provided in motor control center. The suction side of each pump shall have a strainer of ample capacity. A float switch assembly, with the switch completely enclosed in a NEMA 250, Type 4 enclosure, shall start and stop each motor at predetermined water levels. The discharge line from each pump shall be provided with a union or flange.

PART 3 EXECUTION

3.1 GENERAL INSTALLATION REQUIREMENTS

The plumbing system shall be installed complete with necessary fixtures, fittings, traps, valves, and accessories. Water and drainage piping shall be extended 5 feet outside the building, unless otherwise indicated. A gate valve and drain shall be installed on the water service line inside the building approximately 6 inches above the floor from point of entry. Piping shall be connected to the exterior service lines or capped or plugged if the exterior service is not in place. Exterior underground utilities shall be at least 12 inches below the average local frost depth or as indicated on the drawings. If trenches are closed or the pipes are otherwise covered before being connected to the service lines, the location of the end of each plumbing utility shall be marked with a stake or other acceptable means. Valves shall be installed with control no lower than the valve body.

3.1.1 Water Pipe, Fittings, and Connections

3.1.1.1 Utilities

The piping shall be extended to fixtures, outlets, and equipment. The cold-water piping system shall be arranged and installed to permit draining. The supply line to each item of equipment or fixture shall be equipped with a shutoff valve to enable isolation of the item for repair and maintenance without interfering with operation of other equipment or fixtures. Supply piping to fixtures, faucets, and hydrants, shall be anchored to prevent movement.

3.1.1.2 Cutting and Repairing

The work shall be carefully laid out in advance, and unnecessary cutting of construction shall be avoided. Damage to building, piping, wiring, or equipment as a result of cutting shall be repaired by mechanics skilled in the trade involved.

3.1.1.3 Protection of Fixtures, Materials, and Equipment

Pipe openings shall be closed with caps or plugs during installation. Fixtures and equipment shall be tightly covered and protected against dirt, water, chemicals, and mechanical injury. Upon completion of the work, the fixtures, materials, and equipment shall be thoroughly cleaned, adjusted, and operated. Safety guards shall be provided for exposed rotating equipment.

3.1.1.4 Mains, Branches, and Runouts

Piping shall be installed as indicated. Pipe shall be accurately cut and worked into place without springing or forcing. Structural portions of the building shall not be weakened. Aboveground piping shall run parallel with the lines of the building, unless otherwise indicated. Branch pipes from service lines may be taken from top, bottom, or side of main, using crossover fittings required by structural or installation conditions. Supply pipes, valves, and fittings shall be kept a sufficient distance from other work and other services to permit not less than 1/2 inch between finished covering on the different services. Bare and insulated water lines shall not bear directly against building structural elements so as to transmit sound to the structure or to prevent flexible movement of the lines. Water pipe shall not be buried in or under floors unless specifically indicated or approved. Changes in pipe sizes shall be made with reducing fittings. Use of bushings will not be permitted except for use in situations in which standard factory fabricated components are furnished to accommodate specific accepted installation practice. Change in direction shall be made with fittings, except that bending of pipe 4 inches and smaller will be permitted, provided a pipe bender is used and wide sweep bends are formed. The center-line radius of bends shall be not less than six diameters of the pipe. Bent pipe showing kinks, wrinkles, flattening, or other malformations will not be acceptable.

3.1.1.5 Pipe Drains

Pipe drains indicated shall consist of 3/4 inch hose bibb with renewable seat and gate valve ahead of hose bibb. At other low points, 3/4 inch brass plugs or caps shall be provided. Disconnection of the supply piping at the fixture is an acceptable drain.

3.1.2 Joints

Installation of pipe and fittings shall be made in accordance with the

manufacturer's recommendations. Mitering of joints for elbows and notching of straight runs of pipe for tees will not be permitted. Joints shall be made up with fittings of compatible material and made for the specific purpose intended.

3.1.2.1 Threaded

Threaded joints shall have American Standard taper pipe threads conforming to ASME B1.20.1. Only male pipe threads shall be coated with graphite or with an approved graphite compound, or with an inert filler and oil, or shall have a polytetrafluoroethylene tape applied.

3.1.2.2 Unions and Flanges

Unions, flanges and mechanical couplings shall not be concealed in walls, ceilings, or partitions. Unions shall be used on pipe sizes 2-1/2 inches and smaller; flanges shall be used on pipe sizes 3 inches and larger.

3.1.2.3 Copper Tube and Pipe

The tube or fittings shall not be annealed when making connections.

a. Brazed. Brazed joints shall be made in conformance with AWS B2.2, MSS SP-73, and CDA Tube Handbook with flux and are acceptable for all pipe sizes. Copper to copper joints shall include the use of copper-phosphorus or copper-phosphorus-silver brazing metal without flux. Brazing of dissimilar metals (copper to bronze or brass) shall include the use of flux with either a copper-phosphorus, copper-phosphorus-silver or a silver brazing filler metal.

b. Soldered. Soldered joints shall be made with flux and are only acceptable for piping 2 inches and smaller. Soldered joints shall conform to ASME B31.5 and CDA Tube Handbook.

c. Copper Tube Extracted Joint. An extracted mechanical joint may be made in copper tube. Joint shall be produced with an appropriate tool by drilling a pilot hole and drawing out the tube surface to form a collar having a minimum height of three times the thickness of the tube wall. To prevent the branch tube from being inserted beyond the depth of the extracted joint, dimpled depth stops shall be provided. Branch tube shall be notched for proper penetration into fitting to assure a free flow joint. Extracted joints shall be brazed in accordance with NAPHCC Plumbing Code using B-cup series filler metal in accordance with MSS SP-73. Soldered extracted joints will not be permitted.

3.1.2.4 Other Joint Methods

3.1.3 Dissimilar Pipe Materials

Connections between ferrous and non-ferrous copper water pipe shall be made with dielectric unions or flange waterways. Dielectric waterways shall have temperature and pressure rating equal to or greater than that specified for the connecting piping. Waterways shall have metal connections on both ends suited to match connecting piping. Dielectric waterways shall be internally lined with an insulator specifically designed to prevent current flow between dissimilar metals. Dielectric flanges shall meet the performance requirements described herein for dielectric

waterways. Connecting joints between plastic and metallic pipe shall be made with transition fitting for the specific purpose.

3.1.4 Pipe Sleeves and Flashing

Pipe sleeves shall be furnished and set in their proper and permanent location.

3.1.4.1 Sleeve Requirements

Pipes passing through concrete or masonry walls or concrete floors or roofs shall be provided with pipe sleeves fitted into place at the time of construction. Sleeves are not required for supply, drainage, waste and vent pipe passing through concrete slab on grade, except where penetrating a membrane waterproof floor. A modular mechanical type sealing assembly may be installed in lieu of a waterproofing clamping flange and caulking and sealing of annular space between pipe and sleeve. The seals shall consist of interlocking synthetic rubber links shaped to continuously fill the annular space between the pipe and sleeve using galvanized steel bolts, nuts, and pressure plates. The links shall be loosely assembled with bolts to form a continuous rubber belt around the pipe with a pressure plate under each bolt head and each nut. After the seal assembly is properly positioned in the sleeve, tightening of the bolt shall cause the rubber sealing elements to expand and provide a watertight seal between the pipe and the sleeve. Each seal assembly shall be sized as recommended by the manufacturer to fit the pipe and sleeve involved. Sleeves shall not be installed in structural members, except where indicated or approved. Rectangular and square openings shall be as detailed. Each sleeve shall extend through its respective floor, or roof, and shall be cut flush with each surface, except for special circumstances. Pipe sleeves passing through floors in wet areas such as mechanical equipment rooms and other plumbing fixture areas shall extend a minimum of 4 inches above the finished floor. Unless otherwise indicated, sleeves shall be of a size to provide a minimum of 1/4 inch clearance between bare pipe or insulation and inside of sleeve or between insulation and inside of sleeve. Sleeves in bearing walls and concrete slab on grade floors shall be steel pipe or cast-iron pipe. Sleeves in nonbearing walls or ceilings may be steel pipe, cast-iron pipe, galvanized sheet metal with lock-type longitudinal seam, or plastic. Except as otherwise specified, the annular space between pipe and sleeve, or between jacket over insulation and sleeve, shall be sealed as indicated with sealants conforming to ASTM C 920 and with a primer, backstop material and surface preparation as specified in Section 07900 JOINT SEALING. The annular space between pipe and sleeve, between bare insulation and sleeve or between jacket over insulation and sleeve shall not be sealed for interior walls which are not designated as fire rated. Sleeves through below-grade walls in contact with earth shall be recessed 1/2 inch from wall surfaces on both sides. Annular space between pipe and sleeve shall be filled with backing material and sealants in the joint between the pipe and concrete wall as specified above. Sealant selected for the earth side of the wall shall be compatible with dampproofing/waterproofing materials that are to be applied over the joint sealant.

3.1.4.2 Pipe Penetrations of Slab on Grade Floors

Where pipes, fixture drains, floor drains, or similar items penetrate slab on grade floors, except at penetrations of floors with waterproofing membrane as specified in paragraphs Flashing Requirements and Waterproofing, a groove 1/4 to 1/2 inch wide by 1/4 to 3/8 inch deep

shall be formed around the pipe, fitting or drain. The groove shall be filled with a waterproof sealant.

3.1.5 Supports

3.1.5.1 General

Hangers used to support piping 2 inches and larger shall be fabricated to permit adequate adjustment after erection while still supporting the load. Pipe guides and anchors shall be installed to keep pipes in accurate alignment, to direct the expansion movement, and to prevent buckling, swaying, and undue strain. Piping subjected to vertical movement when operating temperatures exceed ambient temperatures shall be supported by variable spring hangers and supports or by constant support hangers. In the support of multiple pipe runs on a common base member, a clip or clamp shall be used where each pipe crosses the base support member. Spacing of the base support members shall not exceed the hanger and support spacing required for an individual pipe in the multiple pipe run. Threaded sections of rods shall not be formed or bent.

3.1.5.2 Pipe Supports and Structural Bracing

Structural steel required for reinforcement to properly support piping, headers, and equipment, but not shown, shall be provided. Material used for supports shall be as specified in Section 05120 STRUCTURAL STEEL.

3.1.5.3 Pipe Hangers, Inserts, and Supports

Installation of pipe hangers, inserts and supports shall conform to MSS SP-58 and MSS SP-69, except as modified herein.

a. Types 5, 12, and 26 shall not be used.

b. Type 3 shall not be used on insulated pipe.

c. Type 18 inserts shall be secured to concrete forms before concrete is placed. Continuous inserts which allow more adjustment may be used if they otherwise meet the requirements for type 18 inserts.

d. Type 19 and 23 C-clamps shall be torqued per MSS SP-69 and shall have both locknuts and retaining devices furnished by the manufacturer. Field-fabricated C-clamp bodies or retaining devices are not acceptable.

e. Type 20 attachments used on angles and channels shall be furnished with an added malleable-iron heel plate or adapter.

f. Type 24 may be used only on trapeze hanger systems or on fabricated frames.

g. Type 39 saddles shall be used on insulated pipe 4 inches and larger when the temperature of the medium is 60 degrees F or higher. Type 39 saddles shall be welded to the pipe.

h. Type 40 shields shall:

(1) Be used on insulated pipe less than 4 inches.

(2) Have a high density insert for all pipe sizes. High density

inserts shall have a density of 8 pcf or greater.

i. Horizontal pipe supports shall be spaced as specified in MSS SP-69 and a support shall be installed not over 1 foot from the pipe fitting joint at each change in direction of the piping. Pipe supports shall be spaced not over 5 feet apart at valves. Horizontal pipe runs shall include allowances for expansion and contraction.

j. Vertical pipe shall be supported at each floor, except at slab-on-grade, at intervals of not more than 15 feet nor more than 8 feet from end of risers. Vertical pipe risers shall include allowances for expansion and contraction.

k. Pipe hangers on horizontal insulated pipe shall be the size of the outside diameter of the insulation. The insulation shall be continuous through the hanger on all pipe sizes and applications.

3.2 FIXTURES AND FIXTURE TRIMMINGS

3.2.1 Backflow Prevention Devices

Plumbing fixtures, equipment, and pipe connections shall not cross connect or interconnect between a potable water supply and any source of nonpotable water. Backflow preventers shall be installed where indicated and in accordance with ICC Plumbing Code at all other locations necessary to preclude a cross-connect or interconnect between a potable water supply and any nonpotable substance. In addition backflow preventers shall be installed at all locations where the potable water outlet is below the flood level of the equipment, or where the potable water outlet will be located below the level of the nonpotable substance. Backflow preventers shall be located so that no part of the device will be submerged. Backflow preventers shall be of sufficient size to allow unrestricted flow of water to the equipment, and preclude the backflow of any nonpotable substance into the potable water system. Bypass piping shall not be provided around backflow preventers. Access shall be provided for maintenance and testing. Each device shall be a standard commercial unit.

3.3 IDENTIFICATION SYSTEMS

3.3.1 Identification Tags

Identification tags made of brass, engraved laminated plastic, or engraved anodized aluminum, indicating service and valve number shall be installed on valves, except those valves installed on supplies at plumbing fixtures. Tags shall be 1-3/8 inch minimum diameter, and marking shall be stamped or engraved. Indentations shall be black, for reading clarity. Tags shall be attached to valves with No. 12 AWG, copper wire, chrome-plated beaded chain, or plastic straps designed for that purpose.

3.4 PAINTING

Painting of pipes, hangers, supports, and other iron work, either in concealed spaces or exposed spaces, is specified in Section 09900 PAINTING, GENERAL.

3.5 TESTS, FLUSHING AND DISINFECTION

3.5.1 Plumbing System

The following tests shall be performed on the plumbing system in accordance with ICC Plumbing Code.

a. Water Supply Systems Tests.

3.5.1.1 Test of Backflow Prevention Assemblies

Backflow prevention assembly shall be tested using gauges specifically designed for the testing of backflow prevention assemblies. Gauges shall be tested annually for accuracy in accordance with the University of Southern California's Foundation of Cross Connection Control and Hydraulic Research or the American Water Works Association Manual of Cross Connection (Manual M-14). Report form for each assembly shall include, as a minimum, the following:

Data on Device	Data on Testing Firm
Type of Assembly	Name
Manufacturer	Address
Model Number	Certified Tester
Serial Number	Certified Tester No.
Size	Date of Test
Location	
Test Pressure Readings	Serial Number and Test Data of Gauges

If the unit fails to meet specified requirements, the unit shall be repaired and retested.

3.5.2 Defective Work

If inspection or test shows defects, such defective work or material shall be replaced or repaired as necessary and inspection and tests shall be repeated. Repairs to piping shall be made with new materials. Caulking of screwed joints or holes will not be acceptable.

3.5.3 System Flushing

3.5.3.1 During Flushing

Before operational tests or disinfection, potable water piping system shall be flushed with potable water. Sufficient water shall be used to produce a water velocity that is capable of entraining and removing debris in all portions of the piping system. This requires simultaneous operation of all fixtures on a common branch or main in order to produce a flushing velocity of approximately 4 fps through all portions of the piping system. In the event that this is impossible due to size of system, the Contracting Officer (or the designated representative) shall specify the number of fixtures to be operated during flushing. Contractor shall provide adequate personnel to monitor the flushing operation and to ensure that drain lines are unobstructed in order to prevent flooding of the facility. Contractor shall be responsible for any flood damage resulting from flushing of the system. Flushing shall be continued until entrained dirt and other foreign materials have been removed and until discharge water shows no discoloration.

3.5.3.2 After Flushing

System shall be drained at low points. Strainer screens shall be removed,

cleaned, and replaced. After flushing and cleaning, systems shall be prepared for testing by immediately filling water piping with clean, fresh potable water. Any stoppage, discoloration, or other damage to the finish, furnishings, or parts of the building due to the Contractor's failure to properly clean the piping system shall be repaired by the Contractor. When the system flushing is complete, the hot-water system shall be adjusted for uniform circulation. Flushing devices and automatic control systems shall be adjusted for proper operation.

3.5.4 Operational Test

Upon completion of flushing and prior to disinfection procedures, the Contractor shall subject the plumbing system to operating tests to demonstrate satisfactory functional and operational efficiency. Such operating tests shall cover a period of not less than 4 hours and shall include the following information in a report with conclusion as to the adequacy of the system:

a. Time, date, and duration of test.

b. Water pressures at the most remote fixture.

c. Operation of each fixture.

d. Operation of each valve, hydrant, and faucet.

e. Pump suction and discharge pressures.

f. Operation of each floor drain by flooding with water.

g. Operation of each vacuum breaker and backflow preventer.

3.5.5 Disinfection

After operational tests are complete, the entire domestic cold-water distribution system shall be disinfected. System shall be flushed as specified, before introducing chlorinating material. The chlorinating material shall be hypochlorites or liquid chlorine. Water chlorination procedure shall be in accordance with AWWA M20. The chlorinating material shall be fed into the water piping system at a constant rate at a concentration of at least 50 parts per million (ppm). A properly adjusted hypochlorite solution injected into the main with a hypochlorinator, or liquid chlorine injected into the main through a solution-feed chlorinator and booster pump, shall be used. The chlorine residual shall be checked at intervals to ensure that the proper level is maintained. Chlorine application shall continue until the entire main is filled. The water shall remain in the system for a minimum of 24 hours. Each valve in the system being disinfected shall be opened and closed several times during the contact period to ensure its proper disinfection. Following the 24-hour period, no less than 25 ppm chlorine residual shall remain in the system. If after the 24 hour and 6 hour holding periods, the residual solution contains less than 25 ppm and 50 ppm chlorine respectively, flush the piping with potable water, and repeat the above procedures until the required residual chlorine levels are satisfied. The system shall then be flushed with clean water until the residual chlorine level is reduced to less than one part per million. During the flushing period each valve and faucet shall be opened and closed several times. Samples of water in disinfected containers shall be obtained from locations selected by the Contracting Officer. The samples of water shall be tested for total

coliform organisms (coliform bacteria, fecal coliform, streptococcal, and other bacteria) in accordance with AWWA EWW. The testing method used shall be either the multiple-tube fermentation technique or the membrane-filter technique. Disinfection shall be repeated until tests indicate the absence of coliform organisms (zero mean coliform density per 100 milliliters) in the samples for at least 2 full days. The system will not be accepted until satisfactory bacteriological results have been obtained.

3.5.6 Flushing of Potable Water System

As an option to the system flushing specified above, the potable water system system shall be flushed and conditioned until the residual level of lead is less than that specified by the base industrial hygienist. The water supply to the building shall be tested separately to ensure that any lead contamination found during potable water system testing is due to work being performed inside the building.

3.6 TABLES

TABLE I
PIPE AND FITTING MATERIALS FOR
DRAINAGE, WASTE, AND VENT PIPING SYSTEMS

		SERVICE	
Item #	Pipe and Fitting Materials	A	B
1	Cast iron soil pipe and fittings, hub and spigot, ASTM A 74 with compression gaskets	X	X
2	Cast iron soil pipe and fittings hubless, CISPI 301 and ASTM A 888		X
3	Cast iron drainage fittings, threaded, ASME B16.12 for use with Item 4	X	
4	Steel pipe, seamless galvanized, ASTM A 53/A 53M, Type S, Grade B	X	

SERVICE:

A - Underground Building Soil, Waste and Storm Drain
B - Aboveground Soil, Waste, Drain In Buildings

TABLE II
PIPE AND FITTING MATERIALS FOR PRESSURE PIPING SYSTEMS

		SERVICE	
Item No.	Pipe and Fitting Materials	A	B
1	Malleable-iron threaded fittings, a. Galvanized, ASME B16.3 for use with Item 2a	X	X
	b. Same as "a" but not galvanized for use with Item 4b		
2	Steel pipe: a. Seamless, galvanized, ASTM A 53/A 53M, Type S, Grade B	X	X
3	Bronze flanged fittings, ASME B16.24 for use with Item4	X	X
4	Seamless copper pipe, ASTM B 42	X	X
5	Seamless copper water tube, ASTM B 88, ASTM B 88M	X**	X***
6	Cast bronze threaded fittings, ASME B16.15 for use with Item 7	X	X
7	Wrought copper and bronze solder-joint pressure fittings, ASME B16.22 for use with Item 7	X	X
8	Cast copper alloy solder-joint pressure fittings, ASME B16.18 for use with Items 5 and 6	X	X
9	Fittings: brass or bronze; ASME B16.15, and ASME B16.18 ASTM B 828	X	
10	Carbon steel pipe unions, socket-welding and threaded, MSS SP-83	X	
11	Malleable-iron threaded pipe unions ASME B16.39	X	
12	Nipples, pipe threaded ASTM A 733	X	

TABLE II
PIPE AND FITTING MATERIALS FOR PRESSURE PIPING SYSTEMS

		SERVICE	
Item No.	Pipe and Fitting Materials	A	B

A - Cold Water Aboveground

B - Cold Water Service Belowground
Indicated types are minimum wall thicknesses.
** - Type L - Hard
*** - Type K - Hard temper with brazed joints only or type K-soft temper without joints in or under floors
**** - In or under slab floors only brazed joints

-- End of Section --

SECTION 15700A

UNITARY HEATING AND COOLING EQUIPMENT
01/01

PART 1 GENERAL

1.1 REFERENCES

The publications listed below form a part of this specification to the extent referenced. The publications are referred to in the text by basic designation only.

AIR CONDITIONING AND REFRIGERATION INSTITUTE (ARI)

ARI 210/240	(1994) Unitary Air-Conditioning and Air-Source Heat Pump Equipment
ARI 270	(1995) Sound Rating of Outdoor Unitary Equipment
ARI 495	(1999) Refrigerant Liquid Receivers
ARI 700	(1999) Specifications for Fluorocarbons and Other Refrigerants

AMERICAN SOCIETY FOR TESTING AND MATERIALS (ASTM)

ASTM B 117	(1997) Operating Salt Spray (Fog) Apparatus
ASTM C 1071	(1998) Thermal and Acoustical Insulation (Glass Fiber, Duct Lining Material)
ASTM D 520	(1984; R 1995el) Zinc Dust Pigment
ASTM E 84	(1999) Surface Burning Characteristics of Building Materials

AMERICAN SOCIETY OF HEATING, REFRIGERATING AND AIR-CONDITIONING ENGINEERS (ASHRAE)

ASHRAE 15	(1994) Safety Code for Mechanical Refrigeration
ASHRAE 34	(1997) Number Designation and Safety Classification of Refrigerants
ASHRAE 52.1	(1992) Gravimetric and Dust-Spot Procedures for Testing Air-Cleaning Devices Used in General Ventilation for Removing Particulate Matter

AMERICAN WELDING SOCIETY (AWS)

AWS Z49.1	(1999) Safety in Welding and Cutting

ASME INTERNATIONAL (ASME)

ASME BPV VIII Div 1	(1998) Boiler and Pressure Vessel Code; Section VIII, Pressure Vessels Division 1 - Basic Coverage
ASME BPV IX	(1998) Boiler and Pressure Vessel Code; Section IX, Welding and Brazing Qualifications

NATIONAL ELECTRICAL MANUFACTURERS ASSOCIATION (NEMA)

NEMA MG 1	(1998) Motors and Generators
NEMA MG 2	(1989) Safety Standard for Construction and Guide for Selection, Installation, and Use of Electric Motors and Generators

NATIONAL FIRE PROTECTION ASSOCIATION (NFPA)

NFPA 70	(1999) National Electrical Code

UNDERWRITERS LABORATORIES (UL)

UL 207	(1993; Rev thru Oct 1997) Refrigerant-Containing Components and Accessories, Nonelectrical
UL 586	(1996; Rev thru Aug 99) High-Efficiency, Particulate, Air Filter Units
UL 900	(1994; Rev thru Nov 1999) Test Performance of Air Filter Units
UL 1995	(1995; Rev thru Aug 1999) Heating and Cooling Equipment

1.2 SUBMITTALS

Government approval is required for submittals with a "G" designation; submittals not having a "G" designation are for information only. When used, a designation following the "G" designation identifies the office that will review the submittal for the Government. The following shall be submitted in accordance with Section 01330 SUBMITTAL PROCEDURES:

SD-03 Product Data

Unitary Equipment; G, AE

Manufacturer's standard catalog data, at least 5 weeks prior to the purchase or installation of a particular component, highlighted to show material, size, options, performance charts and curves, etc. in adequate detail to demonstrate compliance with contract requirements. Data shall include manufacturer's recommended installation instructions and procedures. If vibration isolation is specified for a unit, vibration isolator literature shall be included containing catalog cuts and certification that the isolation characteristics of the isolators provided meet the manufacturer's recommendations. Data shall be submitted for each specified component.

Posted Instructions; G

Posted instructions, at least 2 weeks prior to construction completion, including equipment layout, wiring and control diagrams, piping, valves and control sequences, and typed condensed operation instructions. The condensed operation instructions shall include preventative maintenance procedures, methods of checking the system for normal and safe operation, and procedures for safely starting and stopping the system. The posted instructions shall be framed under glass or laminated plastic and be posted where indicated by the Contracting Officer.

Demonstrations; G

A schedule, at least 2 weeks prior to the date of the proposed training course, which identifies the date, time, and location for the training.

SD-07 Certificates

Unitary Equipment; G

Where the system, components, or equipment are specified to comply with requirements of ARI, ASHRAE, ASME, or UL, proof of such compliance shall be provided. The label or listing of the specified agency shall be acceptable evidence. In lieu of the label or listing, a written certificate from an approved, nationally recognized testing organization equipped to perform such services, stating that the items have been tested and conform to the requirements and testing methods of the specified agency may be submitted. When performance requirements of this project's drawings and specifications vary from standard ARI rating conditions, computer printouts, catalog, or other application data certified by ARI or a nationally recognized laboratory as described above shall be included. If ARI does not have a current certification program that encompasses such application data, the manufacturer may self certify that his application data complies with project performance requirements in accordance with the specified test standards.

SD-10 Operation and Maintenance Data

Operation Manuals; G, AE

Six complete copies of an operation manual in bound 8 1/2 x 11 inch booklets listing step-by-step procedures required for system startup, operation, abnormal shutdown, emergency shutdown, and normal shutdown at least 4 weeks prior to the first training course. The booklets shall include the manufacturer's name, model number, and parts list. The manuals shall include the manufacturer's name, model number, service manual, and a brief description of all equipment and their basic operating features.

Maintenance Manuals; G, AE

Six complete copies of maintenance manual in bound 8-1/2 x 11 inch booklets listing routine maintenance procedures, possible breakdowns and repairs, and a trouble shooting guide. The manuals

shall include piping and equipment layouts and simplified wiring and control diagrams of the system as installed.

1.3 SAFETY REQUIREMENTS

Exposed moving parts, parts that produce high operating temperature, parts which may be electrically energized, and parts that may be a hazard to operating personnel shall be insulated, fully enclosed, guarded, or fitted with other types of safety devices. Safety devices shall be installed so that proper operation of equipment is not impaired. Welding and cutting safety requirements shall be in accordance with AWS Z49.1.

1.4 DELIVERY, STORAGE, AND HANDLING

Stored items shall be protected from the weather, humidity and temperature variations, dirt and dust, or other contaminants. Proper protection and care of all material both before and during installation shall be the Contractor's responsibility. Any materials found to be damaged shall be replaced at the Contractor's expense. During installation, piping and similar openings shall be capped to keep out dirt and other foreign matter.

1.5 PROJECT/SITE CONDITIONS

1.5.1 Verification of Dimensions

The Contractor shall become familiar with all details of the work, verify all dimensions in the field, and advise the Contracting Officer of any discrepancy before performing any work.

1.5.2 Drawings

Because of the small scale of the drawings, it is not possible to indicate all offsets, fittings, and accessories that may be required. The Contractor shall carefully investigate the plumbing, fire protection, electrical, structural and finish conditions that would affect the work to be performed and arrange such work accordingly, furnishing required offsets, fittings, and accessories to meet such conditions.

PART 2 PRODUCTS

2.1 STANDARD COMMERCIAL PRODUCTS

Materials and equipment shall be standard products of a manufacturer regularly engaged in the manufacturing of such products, which are of a similar material, design and workmanship. The standard products shall have been in satisfactory commercial or industrial use for 2 years prior to bid opening. The 2 year use shall include applications of equipment and materials under similar circumstances and of similar size. The 2 years experience shall be satisfactorily completed by a product which has been sold or is offered for sale on the commercial market through advertisements, manufacturer's catalogs, or brochures. Products having less than a 2 year field service record shall be acceptable if a certified record of satisfactory field operation, for not less than 6000 hours exclusive of the manufacturer's factory tests, can be shown. Products shall be supported by a service organization. System components shall be environmentally suitable for the indicated locations.

2.2 NAMEPLATES

Major equipment including compressors, condensers, receivers, heat exchanges, fans, and motors shall have the manufacturer's name, address, type or style, model or serial number, and catalog number on a plate secured to the item of equipment. Plates shall be durable and legible throughout equipment life and made of anodized aluminum. Plates shall be fixed in prominent locations with nonferrous screws or bolts.

2.3 ELECTRICAL WORK

Electrical equipment, motors, motor efficiencies, and wiring shall be in accordance with Section 16415A ELECTRICAL WORK, INTERIOR. Electrical motor driven equipment specified shall be provided complete with motors, motor starters, and controls. Electrical characteristics shall be as shown, and unless otherwise indicated, all motors of 1 horsepower and above with open, dripproof, totally enclosed, or explosion proof fan cooled enclosures, shall be high efficiency type. Field wiring shall be in accordance with manufacturer's instructions. Each motor shall conform to NEMA MG 1 and NEMA MG 2 and be of sufficient size to drive the equipment at the specified capacity without exceeding the nameplate rating of the motor. Motors shall be continuous duty with the enclosure specified. Motor starters shall be provided complete with thermal overload protection and other appurtenances necessary for the motor control indicated. Motors shall be furnished with a magnetic across-the-line or reduced voltage type starter as required by the manufacturer. Motor duty requirements shall allow for maximum frequency start-stop operation and minimum encountered interval between start and stop. Motors shall be sized for the applicable loads. Motor torque shall be capable of accelerating the connected load within 20 seconds with 80 percent of the rated voltage maintained at motor terminals during one starting period. Motor bearings shall be fitted with grease supply fittings and grease relief to outside of enclosure. Manual or automatic control and protective or signal devices required for the operation specified and any control wiring required for controls and devices specified, but not shown, shall be provided.

2.4 UNITARY EQUIPMENT, PACKAGE SYSTEM

Unit shall be an air-cooled one piece wall mounted factory assembled, weatherproof packaged unit as indicated. Unit shall be the heat pump type conforming to applicable Underwriters Laboratories (UL) standards including UL 1995. Unit shall be rated in accordance with ARI 210/240. Unit shall be provided with equipment as specified in paragraph "System Components". Evaporator or supply fans shall be double-width, double inlet, forward curved, backward inclined, or airfoil blade, centrifugal scroll type. Motors shall have open enclosures. Condenser fans shall be manufacturer's standard for the unit specified and may be either propeller or centrifugal scroll type. Unit shall be provided with a factory operating charge of refrigerant and oil. Outdoor unit shall produce a maximum ARI sound rating of 8.6 bels in accordance with ARI 270.

2.4.1 Air-to-Refrigerant Coils

Air-to-refrigerant coils shall have copper tubes of 3/8 inch minimum diameter with copper or aluminum fins that are mechanically bonded or soldered to the tubes. Coils shall be protected with a minimum 3 mil thick phenolic or vinyl coating. Casing shall be galvanized steel or aluminum. Contact of dissimilar metals shall be avoided. Coils shall be tested in accordance with ASHRAE 15 at the factory and be suitable for the working pressure of the installed system. Each coil shall be dehydrated and sealed after testing and prior to evaluation and charging. Each unit shall be

provided with a factory operating charge of refrigerant and oil. Separate expansion devices shall be provided for each compressor circuit.

2.4.2 Compressor

Compressor shall be direct drive, semi-hermetic or hermetic reciprocating, or scroll type capable of operating at partial load conditions. Compressor shall be capable of continuous operation down to the lowest step of unloading as specified. Compressors of 10 tons and larger shall be provided with capacity reduction devices to produce automatic capacity reduction of at least 50 percent. If standard with the manufacturer, two or more compressors may be used in lieu of a single compressor with unloading capabilities, in which case the compressors shall operate in sequence, and each compressor shall have an independent refrigeration circuit through the condenser and evaporator. Compressors shall start in the unloaded position. Each compressor shall be provided with vibration isolators, crankcase heater, thermal overloads, high and low pressure safety cutoffs and protection against short cycling.

2.4.3 Refrigeration Circuit

Refrigerant containing components shall comply with ASHRAE 15 and be factory tested, cleaned, dehydrated, charged, and sealed. Refrigerant charging valves and connections, and pumpdown valves shall be provided for each circuit. Filter-drier shall be provided in each liquid line and be reversible-flow type. Refrigerant flow control devices shall be an adjustable superheat thermostatic expansion valve with external equalizer matched to coil, capillary or thermostatic control, and a pilot solenoid controlled, leak-tight, four-way refrigerant flow reversing valve.

2.4.4 Unit Controls

Unit shall be internally prewired with a 24 volt control circuit powered by an internal transformer. Terminal blocks shall be provided for power wiring and external control wiring. Unit shall have cutoffs for high and low pressure, supply fan failure and safety interlocks on all service panels. Head pressure controls shall sustain unit operation with ambient temperature of 17 degrees F. Adjustable-cycle timers shall prevent short-cycling. Multiple compressors shall be staged by means of a time delay. Unit shall be internally protected by fuses or a circuit breaker in accordance with UL 1995.

2.5 EQUIPMENT EFFICIENCY

Unit shall have a minimum efficiency of 9 seer.

2.6 UNITARY EQUIPMENT COMPONENTS

2.6.1 Refrigerant and Oil

Refrigerant shall be one of the fluorocarbon gases. Refrigerants shall have number designations and safety classifications in accordance with ASHRAE 34. Refrigerants shall meet the requirements of ARI 700 as a minimum. Refrigerants shall have an Ozone Depletion Potential (ODP) of less than or equal to 0.05. Contractor shall provide and install a complete charge of refrigerant for the installed system as recommended by the manufacturer. Except for factory sealed units, two complete charges of lubricating oil for each compressor crankcase shall be furnished. One charge shall be used during the system performance testing period.

Following the satisfactory completion of the performance testing, the oil shall be drained and replaced with a second charge. Lubricating oil shall be of a type and grade recommended by the manufacturer for each compressor. Where color leak indicator dye is incorporated, charge shall be in accordance with manufacturer's recommendation.

2.6.2 Fans

Fan wheel shafts shall be supported by either maintenance-accessible lubricated antifriction block-type bearings, or permanently lubricated ball bearings. Unit fans shall be selected to produce the cfm required at the fan total pressure. Motor starters, if applicable, shall be magnetic across-the-line type with a open enclosure. Thermal overload protection shall be of the manual or automatic-reset type. Fan wheels or propellers shall be constructed of aluminum or galvanized steel. Centrifugal fan wheel housings shall be of galvanized steel, and both centrifugal and propeller fan casings shall be constructed of aluminum or galvanized steel. Steel elements of fans, except fan shafts, shall be hot-dipped galvanized after fabrication or fabricated of mill galvanized steel. Mill-galvanized steel surfaces and edges damaged or cut during fabrication by forming, punching, drilling, welding, or cutting shall be recoated with an approved zinc-rich compound. Fan wheels or propellers shall be statically and dynamically balanced. Direct-drive fan motors shall be of the multiple-speed variety. Each drive will be independent of any other drive. Propeller fans shall be direct-drive drive type with fixed pitch blades. Each drive will be independent of any other drive. Drive bearings shall be protected with water slingers or shields.

2.6.3 Primary/Supplemental Heating

2.6.3.1 Electric Heating Coil

Coil shall be an electric duct heater in accordance with UL 1995 and NFPA 70. Coil shall be unit-mounted. Coil shall be of the nickel chromium resistor, single stage, strip type. Coil shall be provided with a built-in or surface-mounted high-limit thermostat interlocked electrically so that the coil cannot be energized unless the fan is energized. Coil casing and support brackets shall be of galvanized steel or aluminum. Coil shall be mounted to eliminate noise from expansion and contraction and be completely accessible for service.

2.6.4 Air Filters

Air filters shall be listed in accordance with requirements of UL 900, except high efficiency particulate air filters of 99.97 percent efficiency by the DOP Test Method shall be as listed under the label service and shall meet the requirements of UL 586.

2.6.4.1 Extended Surface Pleated Panel Filters

Filters shall be 2 inch depth sectional type of the size indicated and shall have an average efficiency of 25 to 30 percent when tested in accordance with ASHRAE 52.1. Initial resistance at 500 feet per minute will not exceed 0.36 inches water gauge. Filters shall be UL Class 2. Media shall be nonwoven cotton and synthetic fiber mat. A wire support grid bonded to the media shall be attached to a moisture resistant fiberboard frame. Four edges of the filter media shall be bonded to the inside of the frame to prevent air bypass and increase rigidity.

2.6.5 Coil Frost Protection

Each circuit shall be provided with a coil frost protection system which is a manufacturer's standard. The coil frost protection system shall use a temperature sensor in the suction line of the compressor to shut the compressor off when coil frosting occurs. Timers shall be used to prevent the compressor from rapid cycling.

2.6.6 Pressure Vessels

Pressure vessels shall conform to ASME BPV VIII Div 1 or UL 207, as applicable for maximum and minimum pressure or temperature encountered. Where referenced publications do not apply, pressure components shall be tested at 1-1/2 times design working pressure. Refrigerant wetted carbon steel surfaces shall be pickled or abrasive blasted free of mill scale, cleaned, dried, charged, and sealed.

2.6.6.1 Liquid Receiver

A liquid receiver shall be provided when a system's condenser or compressor does not contain a refrigerant storage capacity of at least 20 percent in excess of a fully charged system. Receiver shall be designed, filled, and rated in accordance with the recommendations of ARI 495, except as modified herein. Receiver shall be fitted to include an inlet connection; an outlet drop pipe with oil seal and oil drain where necessary; two bull's-eye liquid level sight glass in same vertical plane, 90 degrees apart and perpendicular to axis of receiver or external gauge glass with metal guard and automatic stop valves; thermal well for thermostat; and purge, charge, equalizing, pressurizing, plugged drain and service valves on the inlet and outlet connections. Receiver shall be provided with a relief valve of capacity and setting in accordance with ASHRAE 15.

2.6.7 Cabinet Construction

Casings for the specified unitary equipment shall be of single, enclosed, weatherproof casing constructed of galvanized steel. Minimum thickness of single wall exterior surfaces shall be 20 gauge galvanized steel on units with a capacity less than 20 tons. Casing shall be fitted with lifting provisions, access panels or doors, fan vibration isolators, electrical control panel, corrosion-resistant components, structural support members, insulated condensate drip pan and drain, and internal insulation in the cold section of the casing. Casing shall have full length side mounting bracket as an integral part of the cabinet and a 16 gage steel bracket shall be provided for the cabinet bottom. Provisions to permit replacement of major unit components shall be incorporated. Penetrations of cabinet surfaces shall be sealed. Top panel shall be sloped away from the building and shall include flashing for rain protection. Unit shall be fitted with a drain pan which extends under all areas where water may accumulate. Drain pan shall be fabricated from Type 300 stainless steel, galvanized steel with protective coating as required, or an approved plastic material. Pan insulation shall be water impervious. Extent and effectiveness of the insulation of unit air containment surfaces shall prevent, within limits of the specified insulation, heat transfer between the unit exterior and ambient air, heat transfer between the two conditioned air streams, and condensation on surfaces. Insulation shall conform to ASTM C 1071. Paint and finishes shall comply with the requirements specified in paragraph FACTORY COATING.

2.6.7.1 Outdoor Cabinet

Outdoor cabinets shall be suitable for outdoor service with a weathertight, insulated and corrosion-protected structure.

2.7 FABRICATION

2.7.1 Factory Coating

Unless otherwise specified, equipment and component items, when fabricated from ferrous metal, shall be factory finished with the manufacturer's standard finish, except that items located outside of buildings shall have weather resistant finishes that will withstand 500 hours exposure to the salt spray test specified in ASTM B 117 using a 5 percent sodium chloride solution. Immediately after completion of the test, the specimen shall show no signs of blistering, wrinkling, cracking, or loss of adhesion and no sign of rust creepage beyond 1/8 inch on either side of the scratch mark. Cut edges of galvanized surfaces where hot-dip galvanized sheet steel is used shall be coated with a zinc-rich coating conforming to ASTM D 520, Type I.

2.7.2 Factory Applied Insulation

Refrigeration equipment shall be provided with factory installed insulation on surfaces subject to sweating including the suction line piping. Where motors are the gas-cooled type, factory installed insulation shall be provided on the cold-gas inlet connection to the motor per manufacturer's standard practice. Factory insulated items installed outdoors are not required to be fire-rated. As a minimum, factory insulated items installed indoors shall have a flame spread index no higher than 75 and a smoke developed index no higher than 150. Factory insulated items (no jacket) installed indoors and which are located in air plenums, in ceiling spaces, and in attic spaces shall have a flame spread index no higher than 25 and a smoke developed index no higher than 50. Flame spread and smoke developed indexes shall be determined by ASTM E 84. Insulation shall be tested in the same density and installed thickness as the material to be used in the actual construction. Material supplied by a manufacturer with a jacket shall be tested as a composite material. Jackets, facings, and adhesives shall have a flame spread index no higher than 25 and a smoke developed index no higher than 50 when tested in accordance with ASTM E 84.

PART 3 EXECUTION

3.1 INSTALLATION

Work shall be performed in accordance with the manufacturer's published diagrams, recommendations, and equipment warranty requirements. Where equipment is specified to conform to the requirements of ASME BPV VIII Div 1 and ASME BPV IX, the design, fabrication, and installation of the system shall conform to ASME BPV VIII Div 1 and ASME BPV IX.

3.2 CLEANING AND ADJUSTING

Equipment shall be wiped clean, with all traces of oil, dust, dirt, or paint spots removed. Temporary filters shall be provided for all fans that are operated during construction, and new filters shall be installed after all construction dirt has been removed from the building. System shall be maintained in this clean condition until final acceptance. Bearings shall be properly lubricated with oil or grease as recommended by the manufacturer. Belts shall be tightened to proper tension. Control valves

and other miscellaneous equipment requiring adjustment shall be adjusted to setting indicated or directed. Fans shall be adjusted to the speed indicated by the manufacturer to meet specified conditions.

3.3 DEMONSTRATIONS

Contractor shall conduct a training course for the operating staff as designated by the Contracting Officer. The training period shall consist of a total 8 hours of normal working time and start after the system is functionally completed but prior to final acceptance tests. The field posted instructions shall cover all of the items contained in the approved operation and maintenance manuals as well as demonstrations of routine maintenance operations.

-- End of Section --

SECTION 15768N

ELECTRIC SPACE HEATING EQUIPMENT
09/99

PART 1 GENERAL

1.1 REFERENCES

The publications listed below form a part of this specification to the extent referenced. The publications are referred to in the text by the basic designation only.

NATIONAL FIRE PROTECTION ASSOCIATION (NFPA)

NFPA 70	(1999) National Electrical Code

UNDERWRITERS LABORATORIES (UL)

UL 1025	(1980; R 1990, Bul. 1991) Electric Air Heaters

1.2 GENERAL REQUIREMENTS

Section 16050N, "Basic Electrical Materials and Methods," applies to this section, with the additions and modifications specified herein.

1.3 SUBMITTALS

Submit the following in accordance with Section 01330, "Submittal Procedures."

SD-03 Product Data

Electric unit heaters G

Thermostat G

SD-10 Operation and Maintenance Data

Electric unit heaters, Data Package 5

Submit operation and maintenance data in accordance with Section 01781N, "Operation and Maintenance Data."

PART 2 PRODUCTS

2.1 ELECTRIC UNIT HEATERS

UL 1025; wattage, voltage, phase, number of steps, Btu/hr and CFM as indicated. Provide control-circuit terminals and single source of power supply. Heaters 5 Kw and larger shall be 3-phase, with load balanced on each of the three phases. Limit leaving air temperature to 140 degrees F with entering air of 60 degrees F.

2.1.1 Heating Element

Nickel chromium heating wire element, free from expansion noise and 60 Hz

hum. Embed element in magnesium-oxide insulating refractory. Seal element in high-mass steel or corrosion-resisting metallic sheath with fins. Enclose element ends in terminal box. Provide not more than six fins per inch. Limit fin surface temperature 550 degrees F at any point during normal operation.

2.1.2 Controls

Include limit controls for overheat protection of heaters. For remote thermostatic operation, provide contactor rated for 100,000 duty cycles. Provide a control transformer to supply 24-volt thermostat control circuit for each heater.

2.1.3 Wiring

Completely factory-prewired to terminal strips, ready to receive branch circuit and control connections for 140 degrees F copper wiring.

2.1.4 Thermostat

Provide tamper resistant space thermostat, adjustable without requiring removal of heater components. Thermostat operating range shall be approximately 50 degrees F to a maximum of 75 degrees F with operating differential of 3 degrees F or less.

2.1.5 Disconnect Means

Provide factory-installed safety disconnect switch in the housing or in an auxiliary matching control section with "off" position marking on the face plate.

PART 3 EXECUTION

3.1 INSTALLATION

Install in conformance with the approved heater installation drawing, NFPA 70, UL listing, and manufacturer's instructions, with necessary clearances for air circulation, maintenance, inspection, service testing and repair. Connect to electrical supply in accordance with Section 16415, "Electrical Work, Interior."

3.1.1 Unit Heaters

Mount units plumb, square and level with ceiling and walls.

3.1.2 Remote Thermostat

Mount remote room space thermostats 4 feet 6 inches above finished floor on wall as indicated. Connect remote thermostats with conduit and wiring to heaters as indicated.

3.2 FIELD QUALITY CONTROL

Provide necessary personnel, instruments, and equipment to perform tests. Notify the Contracting Officer 5 working days prior to scheduled testings and locations.

3.2.1 Field Inspection

Prior to initial operation, inspect installed equipment for conformance with drawings and specifications.

3.2.2 Insulation Resistance Tests

Test 600-volt wiring to verify that no short circuits or grounds exist. Tests shall be made using an instrument which applies a voltage of approximately 500 volts and provides a direct reading of resistance in ohms.

3.2.3 Operational Tests

Test equipment circuits and devices to demonstrate proper operation.Test each item of control equipment not less than 5 times.

-- End of Section --

SECTION 15810N

DUCTWORK AND DUCTWORK ACCESSORIES
09/99

PART 1 GENERAL

1.1 REFERENCES

The publications listed below form a part of this specification to the extent referenced. The publications are referred to in the text by the basic designation only.

AIR MOVEMENT AND CONTROL ASSOCIATION (AMCA)

AMCA 500	(1991) Louvers, Dampers and Shutters
AMCA 501	(1985) Application Manual for Air Louvers

AMERICAN SOCIETY FOR TESTING AND MATERIALS (ASTM)

ASTM E 437	(1992) Industrial Wire Cloth and Screens (Square Opening Series)

NATIONAL FIRE PROTECTION ASSOCIATION (NFPA)

NFPA 90A	(1996) Installation of Air Conditioning and Ventilating Systems

SHEET METAL & AIR CONDITIONING CONTRACTORS' NATIONAL ASSOCIATION (SMACNA)

SMACNA DCS	(1985) HVAC Duct Construction Standards - Metal and Flexible
SMACNA FGDCS	(1992) Fibrous Glass Duct Construction Standards

1.2 RELATED REQUIREMENTS

Section 15050, "Basic Mechanical Materials and Methods," applies to this section with the additions and modifications specified herein.

1.3 Design Requirements

1.3.1 Automatic Dampers

Submit certification of damper leakage testing and conformance with AMCA 500 and specified maximum leakage or pressure drop requirements.

1.3.2 Louvers

Louver shall be sized to permit a pressure drop across louver not exceeding 0.10 inch of wg at velocity of 650 feet per minute through louver-free area.

1.4 SUBMITTALS

Submit the following in accordance with Section 01330, "Submittal Procedures."

SD-03 Product Data

Dampers

Louvers

Bird screens

SD-06 Test Reports

Automatic dampers

Louvers

PART 2 PRODUCTS

2.1 DAMPERS AND LOUVERS

Construct dampers and louvers from ASTM B221 6063T5 extruded aluminum. Except as modified herein, the construction shall be of aluminum with interlocking edges and minimum 6 inch blade width. Conform with SMACNA DCS. Louvers shall be prefinished with shop-applied siliconized polyester finish. Dampers shall be opposed-blade type. Damper blades shall be connected to the damper frame with stainless steel sleeve bearings.

2.1.1 Backdraft Dampers (Gravity Dampers or Shutters)

Factory-fabricated, with statically balanced blades that open automatically when the fan starts and close by gravity when the fan stops. Provide the edges of blades with felt or rubber strips to prevent rattling.

2.1.2 Automatic Dampers

Maximum leakage shall not exceed 25 cfm per square foot of damper face area at 2 inch w.g. pressure difference. Provide actuators for 24V or 120V operation as indicated.

2.1.3 Louvers

Fixed 45 degree slope type. Fold or bead the edges of louver blades to exclude driving rain. Louvers blades shall be oriented to minimize the entrainment of rainwater. Make louver frames of 0.125 inches thick aluminum. Provide bird screen constructed of the same type metal as the louvers. Pressure drop across louver shall not exceed 0.06 inch w.g. at a velocity of 500 feet per minute through louver free area.

2.1.3.1 Bird Screens

ASTM E 437, general industrial-use wire cloth, Grade C, medium light or heavier, nominal 2 mesh 0.063 inch wire diameter, aluminum bird screens. Provide removable insect screens of grooved type, with vinyl or neoprene spline insert for securing screen cloth.

PART 3 EXECUTION

3.1 INSTALLATION

Conform to NFPA 90A, SMACNA DCS and SMACNA FGDCS. Provide mounting and supporting of accessories including, but not limited to, structural supports, hangers, stands, clamps and brackets, and dampers. Provide electrical isolation between dissimilar metals. Electrical isolation may be fluorinated elastomers or sponge-rubber gaskets. Install ductwork accessories as indicated and as recommended by manufacturer's printed instruction. Allow clearance for inspection, repair, replacement, and service. Louvers in accordance with AMCA 501.

-- End of Section --

SECTION 15895A

AIR SUPPLY, DISTRIBUTION, VENTILATION, AND EXHAUST SYSTEM
08/01

PART 1 GENERAL

1.1 REFERENCES

The publications listed below form a part of this specification to the extent referenced. The publications are referred to in the text by basic designation only.

AIR CONDITIONING AND REFRIGERATION INSTITUTE (ARI)

ARI Guideline D	(1996) Application and Installation of Central Station Air-Handling Units

AIR MOVEMENT AND CONTROL ASSOCIATION (AMCA)

AMCA 210	(1985) Laboratory Methods of Testing Fans for Rating
AMCA 300	(1996) Reverberant Room Method for Sound Testing of Fans

AMERICAN SOCIETY FOR TESTING AND MATERIALS (ASTM)

ASTM A 123/A 123M	(2000) Zinc (Hot-Dip Galvanized) Coatings on Iron and Steel Products
ASTM A 924/A 924M	(1999) General Requirements for Steel Sheet, Metallic-Coated by the Hot-Dip Process
ASTM B 117	(1997) Operating Salt Spray (Fog) Apparatus
ASTM D 520	(2000) Zinc Dust Pigment
ASTM D 1654	(1992) Evaluation of Painted or Coated Specimens Subjected to Corrosive Environments
ASTM D 3359	(1997) Measuring Adhesion by Tape Test

NATIONAL ELECTRICAL MANUFACTURERS ASSOCIATION (NEMA)

NEMA MG 1	(1998) Motors and Generators

1.2 COORDINATION OF TRADES

Ductwork, piping offsets, fittings, and accessories shall be furnished as required to provide a complete installation and to eliminate interference with other construction.

1.3 DELIVERY AND STORAGE

Equipment delivered and placed in storage shall be stored with protection from the weather, humidity and temperature variations, dirt and dust, or other contaminants.

1.4 SUBMITTALS

Government approval is required for submittals with a "G" designation; submittals not having a "G" designation are for information only. When used, a designation following the "G" designation identifies the office that will review the submittal for the Government. The following shall be submitted in accordance with Section 01330 SUBMITTAL PROCEDURES:

SD-03 Product Data

Components and Equipment; G, AE

Manufacturer's catalog data shall be included with the detail drawings for the following items. The data shall be highlighted to show model, size, options, etc., that are intended for consideration. Data shall be adequate to demonstrate compliance with contract requirements for the following:

a. Ductwork Components

b. Air Systems Equipment

Field Training; G

Proposed schedule for field training, at least 2 weeks prior to the start of related training.

SD-06 Test Reports

Performance Tests; G

Test reports for the piping hydrostatic test, ductwork leak test, and performance tests in booklet form, upon completion of testing. Reports shall document phases of tests performed including initial test summary, repairs/adjustments made, and final test results.

SD-10 Operation and Maintenance Data

Operating and Maintenance Instructions; G, AE

Six manuals listing step-by-step procedures required for system startup, operation, shutdown, and routine maintenance, at least 2 weeks prior to field training. The manuals shall include the manufacturer's name, model number, parts list, list of parts and tools that should be kept in stock by the owner for routine maintenance including the name of a local supplier, simplified wiring and controls diagrams, troubleshooting guide, and recommended service organization (including address and telephone number) for each item of equipment. Each service organization submitted shall be capable of providing 4hour onsite response to a service call on an emergency basis.

PART 2 PRODUCTS

2.1 STANDARD PRODUCTS

Components and equipment shall be standard products of a manufacturer regularly engaged in the manufacturing of products that are of a similar material, design and workmanship. The standard products shall have been in satisfactory commercial or industrial use for 2 years before bid opening. The 2-year experience shall include applications of components and equipment under similar circumstances and of similar size. The 2 years must be satisfactorily completed by a product which has been sold or is offered for sale on the commercial market through advertisements, manufacturers' catalogs, or brochures. Products having less than a 2-year field service record will be acceptable if a certified record of satisfactory field operation, for not less than 6000 hours exclusive of the manufacturer's factory tests, can be shown. The equipment items shall be supported by a service organization.

2.2 ASBESTOS PROHIBITION

Asbestos and asbestos-containing products shall not be used.

2.3 NAMEPLATES

Equipment shall have a nameplate that identifies the manufacturer's name, address, type or style, model or serial number, and catalog number.

2.4 EQUIPMENT GUARDS AND ACCESS

Belts, pulleys, projecting setscrews, keys, and other rotating parts exposed to personnel contact shall be fully enclosed or guarded according to OSHA requirements.

2.5 ELECTRICAL WORK

Electrical motor-driven equipment specified shall be provided complete with motor, motor starter, and controls. Unless otherwise specified, electric equipment, including wiring and motor efficiencies, shall be according to Section 16415 ELECTRICAL WORK, INTERIOR. Electrical characteristics and enclosure type shall be as shown. Unless otherwise indicated, motors of 1 hp and above shall be high efficiency type. Motor starters shall be provided complete with thermal overload protection and other appurtenances necessary. Each motor shall be according to NEMA MG 1 and shall be of sufficient size to drive the equipment at the specified capacity without exceeding the nameplate rating of the motor. Manual or automatic control and protective or signal devices required for the operation specified, and any control wiring required for controls and devices, but not shown, shall be provided. Where two-speed or variable-speed motors are indicated, solid-state variable-speed controller may be provided to accomplish the same function. Solid-state variable-speed controllers shall be utilized for motors rated 10 hp or less. Adjustable frequency drives shall be used for larger motors.

2.6 AIR SYSTEMS EQUIPMENT

2.6.1 Fans

Fans shall be tested and rated according to AMCA 210. Fans may be connected to the motors either directly or indirectly with V-belt drive. V-belt drives shall be designed for not less than 150 percent of the connected driving capacity. Motor sheaves shall be variable pitch for 15 hp

and below and fixed pitch as defined by ARI Guideline D. Variable pitch sheaves shall be selected to drive the fan at a speed which will produce the specified capacity when set at the approximate midpoint of the sheave adjustment. When fixed pitch sheaves are furnished, a replaceable sheave shall be provided when needed to achieve system air balance. Motors for V-belt drives shall be provided with adjustable rails or bases. Removable metal guards shall be provided for all exposed V-belt drives, and speed-test openings shall be provided at the center of all rotating shafts. Fans shall be provided with personnel screens or guards on both suction and supply ends, except that the screens need not be provided, unless otherwise indicated, where ducts are connected to the fan. Fan and motor assemblies shall be provided with vibration-isolation supports or mountings as indicated. Vibration-isolation units shall be standard products with published loading ratings. Each fan shall be selected to produce the capacity required at the fan static pressure indicated. Sound power level shall be as indicated. The sound power level values shall be obtained according to AMCA 300. Standard AMCA arrangement, rotation, and discharge shall be as indicated.

2.6.1.1 Panel Type Power Wall Ventilators

Fans shall be propeller type, assembled on a reinforced metal panel with venturi opening spun into panel. Fans with wheels less than 24 inches diameter shall be direct or V-belt driven and fans with wheels 24 inches diameter and larger shall be V-belt drive type. Fans shall be furnished with wall housing, flush exterior guard and closure angles. Heavy duty lubricated regreasable ball type bearings shall be provided. Fans shall be fitted with wheel and motor side metal or wire guards which have a corrosion-resistant finish. Motor enclosure shall be dripproof type. Gravity backdraft dampers shall be provided for each fan.

2.7 FACTORY PAINTING

Units which are not of galvanized construction according to ASTM A 123/A 123M or ASTM A 924/A 924M shall be factory painted with a corrosion resisting paint finish. Internal and external ferrous metal surfaces shall be cleaned, phosphatized and coated with a paint finish which has been tested according to ASTM B 117, ASTM D 1654, and ASTM D 3359. Evidence of satisfactory paint performance for a minimum of 125 hours for units to be installed indoors and 500 hours for units to be installed outdoors shall be submitted. Rating of failure at the scribe mark shall be not less than 6, average creepage not greater than 1/8 inch. Rating of the inscribed area shall not be less than 10, no failure. On units constructed of galvanized steel which have been welded, exterior surfaces of welds or welds that have burned through from the interior shall receive a final shop docket of zinc-rich protective paint according to ASTM D 520 Type I.

PART 3 EXECUTION

3.1 INSTALLATION

Work shall be installed as shown and according to the manufacturer's diagrams and recommendations.

3.1.1 Equipment and Installation

Frames and supports shall be provided for fans, dampers, and other similar items requiring supports.

3.2 FIELD PAINTING AND COLOR CODE MARKING

Finish painting of items only primed at the factory, surfaces not specifically noted otherwise, and color code marking for piping shall be as specified in Section 09900 PAINTING, GENERAL.

3.3 CLEANING AND ADJUSTING

Equipment shall be wiped clean, with traces of oil, dust, dirt, or paint spots removed. Temporary filters shall be provided prior to startup of all fans that are operated during construction, and new filters shall be installed after all construction dirt has been removed from the building, and the ducts, plenums, casings, and other items specified have been vacuum cleaned. System shall be maintained in this clean condition until final acceptance. Bearings shall be properly lubricated with oil or grease as recommended by the manufacturer. Belts shall be tightened to proper tension. Control valves and other miscellaneous equipment requiring adjustment shall be adjusted to setting indicated or directed. Fans shall be adjusted to the speed indicated by the manufacturer to meet specified conditions.

3.4 PERFORMANCE TESTS

After testing, adjusting, and balancing has been completed as specified, each system shall be tested as a whole to see that all items perform as integral parts of the system and temperatures and conditions are evenly controlled throughout the building. Corrections and adjustments shall be made as necessary to produce the conditions indicated or specified. Capacity tests and general operating tests shall be conducted by an experienced engineer. Tests shall cover a period of not less than 1 days for each system and shall demonstrate that the entire system is functioning according to the specifications. Coincidental chart recordings shall be made at points indicated on the drawings for the duration of the time period and shall record the temperature at space thermostats or space sensors, the humidity at space humidistats or space sensors and the ambient temperature and humidity in a shaded and weather protected area.

3.5 FIELD TRAINING

The Contractor shall conduct a training course for operating and maintenance personnel as designated by the Contracting Officer. Training shall be provided for a period of 4 hours of normal working time and shall start after the system is functionally complete but prior to the performance tests. The field instruction shall cover all of the items contained in the approved Operating and Maintenance Instructions.

-- End of Section --

SECTION 16050N

BASIC ELECTRICAL MATERIALS AND METHODS
02/01

PART 1 GENERAL

1.1 REFERENCES

The publications listed below form a part of this specification to the extent referenced. The publications are referred to in the text by the basic designation only.

AMERICAN SOCIETY FOR TESTING AND MATERIALS (ASTM)

ASTM D709	(2000) Laminated Thermosetting Materials

U.S. NATIONAL ARCHIVES AND RECORDS ADMINISTRATION (NARA)

29 CFR 1910.147	Control of Hazardous Energy (Lock Out/Tag Out)

INSTITUTE OF ELECTRICAL AND ELECTRONICS ENGINEERS (IEEE)

IEEE 100	(1996) Dictionary of Electrical and Electronics Terms (ANSI/IEEE)
IEEE C2	(1997) National Electrical Safety Code (ANSI/IEEE)

NATIONAL ELECTRICAL MANUFACTURERS ASSOCIATION (NEMA)

NEMA C57.12.28	(1999) Pad-Mounted Equipment - Enclosure Integrity (Revision of ANSI C57.12.28-88)
NEMA ICS 6	(1993) Industrial Control and Systems Enclosures
NEMA MG 1	(1998; Errata 1999) Motors and Generators
NEMA MG 10	(1994) Energy Management Guide for Selection and Use of Fixed Frequency Medium AC Squirrel-Cage Polyphase Induction Motors
NEMA MG 11	(1977; R 1992) Energy Management Guide for Selection and Use of Single-Phase Motors

NATIONAL FIRE PROTECTION ASSOCIATION (NFPA)

NFPA 70	(1999) National Electrical Code

1.2 RELATED REQUIREMENTS

This section applies to certain sections of Division 2, "Site Construction," Division 13, "Special Construction," and Division 15, "Mechanical". This section applies to all sections of Division 16, "Electrical," of this project specification unless specified otherwise in

the individual sections.

1.3 DEFINITIONS

a. Unless otherwise specified or indicated, electrical and electronics terms used in these specifications, and on the drawings, shall be as defined in IEEE 100.

b. The technical sections referred to herein are those specification sections that describe products, installation procedures, and equipment operations and that refer to this section for detailed description of submittal types.

c. The technical paragraphs referred to herein are those paragraphs in PART 2 - PRODUCTS and PART 3 - EXECUTION of the technical sections that describe products, systems, installation procedures, equipment, and test methods.

1.4 ELECTRICAL CHARACTERISTICS

Electrical characteristics for this project shall be 22 kV primary, three phase, three wire, 60 Hz, and 480 volts secondary, three phase, four wire. Final connections to the power distribution system at the existing transformer shall be made by the Contractor as directed by the Contracting Officer.

1.5 SUBMITTALS

Submittals required in the sections which refer to this section shall conform to the requirements of Section 01330, "Submittal Procedures" and to the following additional requirements. Submittals shall include the manufacturer's name, trade name, place of manufacture, catalog model or number, nameplate data, size, layout dimensions, capacity, project specification and technical paragraph reference. Submittals shall also include applicable federal, military, industry, and technical society publication references, and years of satisfactory service, and other information necessary to establish contract compliance of each item to be provided. Photographs of existing installations are unacceptable and will be returned without approval.

1.5.1 Manufacturer's Catalog Data

Submittals for each manufactured item shall be current manufacturer's descriptive literature of cataloged products, equipment drawings, diagrams, performance and characteristic curves, and catalog cuts. Handwritten and typed modifications and other notations not part of the manufacturer's preprinted data will result in the rejection of the submittal. Should manufacturer's data require supplemental information for clarification, the supplemental information shall be submitted as specified for certificates of compliance.

1.5.2 Drawings

Submit drawings a minimum of 11 by 17 inches in size using a minimum scale of 1/8 inch per foot. Include wiring diagrams and installation details of equipment indicating proposed location, layout and arrangement, control panels, accessories, piping, ductwork, and other items that must be shown to ensure a coordinated installation. Wiring diagrams shall identify circuit terminals and indicate the internal wiring for each item of

equipment and the interconnection between each item of equipment. Drawings shall indicate adequate clearance for operation, maintenance, and replacement of operating equipment devices.

1.5.3 Instructions

Where installation procedures or part of the installation procedures are required to be in accordance with manufacturer's instructions, submit printed copies of those instructions prior to installation. Installation of the item shall not proceed until manufacturer's instructions are received. Failure to submit manufacturer's instructions shall be cause for rejection of the equipment or material.

1.5.4 Certificates

Submit manufacturer's certifications as required for products, materials, finishes, and equipment as specified in the technical sections. Certificates from material suppliers are not acceptable. Preprinted certifications and copies of previously submitted documents will not be acceptable. The manufacturer's certifications shall name the appropriate products, equipment, or materials and the publication specified as controlling the quality of that item. Certification shall not contain statements to imply that the item does not meet requirements specified, such as "as good as"; "achieve the same end use and results as materials formulated in accordance with the referenced publications"; or "equal or exceed the service and performance of the specified material." Certifications shall simply state that the item conforms to the requirements specified. Certificates shall be printed on the manufacturer's letterhead and shall be signed by the manufacturer's official authorized to sign certificates of compliance.

1.5.4.1 Reference Standard Compliance

Where equipment or materials are specified to conform to industry and technical society reference standards of the organizations such as American National Standards Institute (ANSI), American Society for Testing and Materials (ASTM), National Electrical Manufacturers Association (NEMA), Underwriters Laboratories (UL), and Association of Edison Illuminating Companies (AEIC), submit proof of such compliance. The label or listing by the specified organization will be acceptable evidence of compliance.

1.5.4.2 Independent Testing Organization Certificate

In lieu of the label or listing, submit a certificate from an independent testing organization, competent to perform testing, and approved by the Contracting Officer. The certificate shall state that the item has been tested in accordance with the specified organization's test methods and that the item complies with the specified organization's reference standard.

1.5.5 Operation and Maintenance Manuals

Comply with the requirements of Section 01781N, "Operation and Maintenance Data" and the technical sections.

1.5.5.1 Operating Instructions

Submit text of posted operating instructions for each system and principal item of equipment as specified in the technical sections.

1.6 QUALITY ASSURANCE

1.6.1 Material and Equipment Qualifications

Provide materials and equipment that are products of manufacturers regularly engaged in the production of such products which are of equal material, design and workmanship. Products shall have been in satisfactory commercial or industrial use for 2 years prior to bid opening. The 2-year period shall include applications of equipment and materials under similar circumstances and of similar size. The product shall have been on sale on the commercial market through advertisements, manufacturers' catalogs, or brochures during the 2-year period. Where two or more items of the same class of equipment are required, these items shall be products of a single manufacturer; however, the component parts of the item need not be the products of the same manufacturer unless stated in the technical section.

1.6.2 Regulatory Requirements

Equipment, materials, installation, and workmanship shall be in accordance with the mandatory and advisory provisions of NFPA 70.

1.6.3 Service Support

The equipment items shall be supported by service organizations which are reasonably convenient to the equipment installation in order to render satisfactory service to the equipment on a regular and emergency basis during the warranty period of the contract.

1.6.4 Manufacturer's Nameplate

Each item of equipment shall have a nameplate bearing the manufacturer's name, address, model number, and serial number securely affixed in a conspicuous place; the nameplate of the distributing agent will not be acceptable.

1.6.5 Modification of References

In each of the publications referred to herein, consider the advisory provisions to be mandatory, as though the word, "shall" had been substituted for "should" wherever it appears. Interpret references in these publications to the "authority having jurisdiction," or words of similar meaning, to mean the Contracting Officer.

1.6.6 Material and Equipment Manufacturing Date

Products manufactured more than 3 years prior to date of delivery to site shall not be used, unless specified otherwise.

1.7 POSTED OPERATING INSTRUCTIONS

Provide for each system and principal item of equipment as specified in the technical sections for use by operation and maintenance personnel. The operating instructions shall include the following:

a. Wiring diagrams, control diagrams, and control sequence for each principal system and item of equipment.

b. Start up, proper adjustment, operating, lubrication, and shutdown procedures.

c. Safety precautions.

d. The procedure in the event of equipment failure.

e. Other items of instruction as recommended by the manufacturer of each system or item of equipment.

Print or engrave operating instructions and frame under glass or in approved laminated plastic. Post instructions where directed. For operating instructions exposed to the weather, provide weather-resistant materials or weatherproof enclosures. Operating instructions shall not fade when exposed to sunlight and shall be secured to prevent easy removal or peeling.

1.8 NAMEPLATES

ASTM D709. Provide laminated plastic nameplates for each panelboard, equipment enclosure, relay, switch, and device; as specified in the technical sections or as indicated on the drawings. Each nameplate inscription shall identify the function and, when applicable, the position. Nameplates shall be melamine plastic, 0.125 inch thick, white with black center core. Surface shall be matte finish. Corners shall be square. Accurately align lettering and engrave into the core. Minimum size of nameplates shall be one by 2.5 inches. Lettering shall be a minimum of 0.25 inch high normal block style.

1.9 WARNING SIGNS

Provide warning signs for the enclosures of electrical equipment including substations, pad-mounted transformers, pad-mounted switches, generators, and switchgear having a nominal rating exceeding 600 volts.

a. When the enclosure integrity of such equipment is specified to be in accordance with NEMA C57.12.28, such as for pad-mounted transformers, provide self-adhesive warning signs on the outside of the high voltage compartment door(s). Sign shall be a decal and shall have nominal dimensions of 7 by 10 inches with the legend "DANGER HIGH VOLTAGE" printed in two lines of nominal 2 inch high letters. The word "DANGER" shall be in white letters on a red background and the words "HIGH VOLTAGE" shall be in black letters on a white background. Decal shall be Panduit No. PPSO710D72 or approved equal.

1.10 CABLE TAGS IN MANHOLES, HANDHOLES, AND VAULTS

Provide tags for each cable or wire located in manholes, handholes, and vaults. Tag new wire and cable provided under this contract and existing wire and cable which are indicated to have splices and terminations provided by this contract. The first position on the tag shall denote the voltage. The second through sixth positions on the tag shall identify the circuit. The next to last position shall denote the phase of the circuit and shall include the Greek "phi" symbol. The last position shall denote the cable size. The tags shall be polyethylene. Do not provide handwritten letters. As an example, a tag could have the following designation: "11.5 NAS 1-8(Phase A)500," denoting that the tagged cable is on the 11.5kV system circuit number NAS 1-8, underground, Phase A, sized at 500 kcmil.

1.10.1 Polyethylene Cable Tags

Provide tags of polyethylene that have an average tensile strength of 3250 pounds per square inch; and that are 0.08 inch thick (minimum), non-corrosive non-conductive; resistive to acids, alkalis, organic solvents, and salt water; and distortion resistant to 170 degrees F. Provide 0.05 inch (minimum) thick black polyethylene tag holder. Provide a one-piece nylon, self-locking tie at each end of the cable tag. Ties shall have a minimum loop tensile strength of 175 pounds. The cable tags shall have black block letters, numbers, and symbols one inch high on a yellow background. Letters, numbers, and symbols shall not fall off or change positions regardless of the cable tags' orientation.

1.11 ELECTRICAL REQUIREMENTS

Electrical installations shall conform to IEEE C2, NFPA 70, and requirements specified herein.

1.11.1 Motors and Equipment

Provide electrical components of mechanical equipment, such as motors, motor starters, control or push-button stations, float or pressure switches, solenoid valves, and other devices functioning to control mechanical equipment, including control wiring and conduit to conform with the requirements of the section covering the mechanical equipment. Extended voltage range motors shall not be permitted. The interconnecting power wiring and conduit, control wiring rated 120 volts (nominal) and conduit, the motor control equipment forming a part of motor control centers, and the electrical power circuits shall be provided under Division 16.

Provide motors, controllers, with their respective pieces of equipment. Controllers indicated as part of the motor control centers shall be provided under Section 16403A, "Motor Control Centers, Switchboards and Panelboards". Motors, controllers, and contactors shall conform to Section 16415A, "Electrical Work, Interior". Extended voltage range motors shall not be permitted. Control voltage for controllers and contactors shall not exceed 120 volts nominal. When motors and equipment furnished are larger than sizes indicated, the cost of additional electrical service and related work shall be included under the section that specified that motor or equipment. Where fuse protection is specifically recommended by the equipment manufacturer, provide fused switches as directed by equipment manufacturer.

1.11.2 Wiring and Conduit

Provide internal wiring for components of packaged equipment as an integral part of the equipment. Provide power wiring and conduit for field-installed equipment, and motor control equipment forming part of motor control centers or switchgear assemblies, the conduit and wiring connecting such centers, assemblies, or other power sources to equipment under Section 16403A, "Motor Control Centers, Switchboards and Panelboards." Power wiring and conduit shall conform to Section 16415A, "Electrical Work, Interior." Control wiring and conduit shall be provided under, and conform to the requirements of the section specifying the associated equipment.

1.11.3 High Efficiency Motors

1.11.3.1 High Efficiency Single-Phase Motors

Unless otherwise specified, single-phase fractional-horsepower alternating-current motors shall be high efficiency types corresponding to the applications listed in NEMA MG 11.

1.11.3.2 High Efficiency Polyphase Motors

Unless otherwise specified, polyphase motors shall be selected based on high efficiency characteristics relative to the applications as listed in NEMA MG 10. Additionally, polyphase squirrel-cage medium induction motors with continuous ratings shall meet or exceed energy efficient ratings in accordance with Table 12-10 of NEMA MG 1.

1.12 INSTRUCTION TO GOVERNMENT PERSONNEL

Where specified in the technical sections, furnish the services of competent instructors to give full instruction to designated Government personnel in the adjustment, operation, and maintenance of the specified systems and equipment, including pertinent safety requirements as required. Instructors shall be thoroughly familiar with all parts of the installation and shall be trained in operating theory as well as practical operation and maintenance work. Instruction shall be given during the first regular work week after the equipment or system has been accepted and turned over to the Government for regular operation. The number of man-days (8 hours per day) of instruction furnished shall be as specified in the individual section.

1.13 LOCKOUT REQUIREMENTS

Provide disconnecting means capable of being locked out for machines and other equipment to prevent unexpected startup or release of stored energy in accordance with 29 CFR 1910.147. Mechanical isolation of machines and other equipment shall be in accordance with requirements of Division 15, "Mechanical."

PART 2 PRODUCTS

Not used.

PART 3 EXECUTION

3.1 PAINTING OF EQUIPMENT

3.1.1 Factory Applied

Electrical equipment shall have factory-applied painting systems which shall, as a minimum, meet the requirements of NEMA ICS 6 corrosion-resistance test.

3.2 NAMEPLATE MOUNTING

Provide number, location, and letter designation of nameplates as indicated. Fasten nameplates to the device with a minimum of two sheet-metal screws or two rivets.

3.3 WARNING SIGN MOUNTING

Provide the number of signs required to be readable from each accessible side, but space the signs a maximum of 30 feet apart.

3.4 CABLE TAG INSTALLATION

Install cable tags in each manhole, handhole, and vault as specified, including each splice. Install cable tags over the fireproofing, if any, and locate the tags so that they are clearly visible without disturbing any cabling or wiring in the manholes, handholes, and vaults.

-- End of Section --

SECTION 16081N

APPARATUS INSPECTION AND TESTING
01/01

PART 1 GENERAL

1.1 REFERENCES

The publications listed below form a part of this specification to the extent referenced. The publications are referred to in the text by the basic designation only.

INTERNATIONAL ELECTRICAL TESTING ASSOCIATION (NETA)

NETA ATS	(1999) Electrical Power Distribution Equipment and Systems

1.2 RELATED REQUIREMENTS

Section 16050N, "Basic Electrical Materials and Methods" applies to this section with additions and modifications specified herein.

1.3 SUBMITTALS

Submit the following in accordance with Section 01330, "Submittal Procedures."

SD-06 Test Reports

Acceptance tests and inspections; G

Submit certified copies of inspection reports and test reports. Reports shall include certification of compliance with specified requirements, identify deficiencies, and recommend corrective action when appropriate. Type and neatly bind test reports to form a part of the final record. Submit test reports documenting the results of each test not more than 10 days after test is completed.

SD-07 Certificates

Qualifications of organization, and lead engineering technician; G

Acceptance test and inspections procedure; G

1.4 QUALITY ASSURANCE

1.4.1 Qualifications

Contractor shall engage the services of a qualified testing organization to provide inspection, testing, calibration, and adjustment of the electrical distribution system and generation equipment listed in paragraph entitled "Acceptance Tests and Inspections" herein. Organization shall be independent of the supplier, manufacturer, and installer of the equipment. The organization shall be a first tier subcontractor. No work required by this section of the specification shall be performed by a second tier subcontractor.

a. Submit name and qualifications of organization. Organization shall have been regularly engaged in the testing of electrical materials, devices, installations, and systems for a minimum of 5 years. The organization shall have a calibration program, and test instruments used shall be calibrated in accordance with NETA ATS.

b. Submit name and qualifications of the lead engineering technician performing the required testing services. Include a list of three comparable jobs performed by the technician with specific names and telephone numbers for reference. Testing, inspection, calibration, and adjustments shall be performed by an engineering technician, certified by NETA or the National Institute for Certification in Engineering Technologies (NICET) with a minimum of 5 years' experience inspecting, testing, and calibrating electrical distribution and generation equipment, systems, and devices.

1.4.2 Acceptance Test and Inspections Procedure

Submit test procedure reports for each item of equipment to be field tested at least 45 days prior to planned testing date. Do not perform testing until after test procedure has been approved.

PART 2 PRODUCTS

Not used.

PART 3 EXECUTION

3.1 ACCEPTANCE TESTS AND INSPECTIONS

Testing organization shall perform acceptance tests and inspections. Test methods, procedures, and test values shall be performed and evaluated in accordance with NETA ATS, the manufacturer's recommendations, and paragraph entitled "Field Quality Control" of each applicable specification section. Tests identified as optional in NETA ATS are not required unless otherwise specified. Equipment shall be placed in service only after completion of required tests and evaluation of the test results have been completed. Contractor shall supply to the testing organization complete sets of shop drawings, settings of adjustable devices, and other information necessary for an accurate test and inspection of the system prior to the performance of any final testing. Contracting Officer shall be notified at least 14 days in advance of when tests will be conducted by the testing organization. Perform acceptance tests and inspections on applicable equipment and systems specified in the following sections:

a. Section 16232N, "Standby Diesel-Electric Generators"

b. Section 16272N, "Three-Phase Pad-Mounted Transformers"

c. Section 16302N, "Underground Transmission and Distribution"

d. Section 16410N, "Automatic Transfer Switches"

3.2 SYSTEM ACCEPTANCE

Final acceptance of the system is contingent upon satisfactory completion

of acceptance tests and inspections.

3.3 PLACING EQUIPMENT IN SERVICE

A representative of the approved testing organization shall be present when equipment tested by the organization is initially energized and placed in service.

-- End of Section --

SECTION 16120A

INSULATED WIRE AND CABLE
11/91

PART 1 GENERAL

1.1 REFERENCES

The publications listed below form a part of this specification to the extent referenced. The publications are referred to in the text by basic designation only.

ASSOCIATION OF EDISON ILLUMINATING COMPANIES (AEIC)

AEIC CS5	(Oct 1987; 9th Ed) Thermoplastic and Crosslinked Polyethylene Insulated Shielded Power Cables Rated 5 Through 35 kV
AEIC CS6	(Oct 1987; 5th Ed; Rev Mar 1989) Ethylene Propylene Insulated Shielded Power Cables Rated 5 Through 69 kV

INSTITUTE OF ELECTRICAL AND ELECTRONICS ENGINEERS (IEEE)

IEEE Std 383	(1974; R 1992) Class 1E Electric Cables, Field Splices, and Connections for Nuclear Power Generating Stations

NATIONAL ELECTRICAL MANUFACTURERS ASSOCIATION (NEMA)

NEMA WC 7	(1988) Cross-Linked-Thermosetting-Polyethylene-Insulated Wire and Cable for the Transmission and Distribution of Electrical Energy
NEMA WC 8	(1988) Ethylene-Propylene-Rubber-Insulated Wire and Cable for the Transmission and Distribution of Electrical Energy

1.2 SUBMITTALS

Government approval is required for submittals with a "G" designation; submittals not having a "G" designation are for information only. When used, a designation following the "G" designation identifies the office that will review the submittal for the Government. The following shall be submitted in accordance with Section 01330 SUBMITTAL PROCEDURES:

SD-03 Product Data

Installation Instructions

The Contractor shall submit cable manufacturing data.

SD-06 Test Reports

Tests, Inspections, and Verifications

3 certified copies of test reports shall be submitted by the contractor.

1.3 DELIVERY, STORAGE, AND HANDLING

Furnish cables on reels or coils. Each cable and the outside of each reel or coil, shall be plainly marked or tagged to indicate the cable length, voltage rating, conductor size, and manufacturer's lot number and reel number. Each coil or reel of cable shall contain only one continuous cable without splices. Shielded cables rated 2,001 volts and above and shall be reeled and marked in accordance with Section I of AEIC CS5 or AEIC CS6, as applicable. Reels shall remain the property of the Contractor.

1.4 PROJECT/SITE CONDITIONS

PART 2 PRODUCTS

2.1 MATERIALS

2.1.1 Rated Circuit Voltages

All wire and cable shall have minimum rated circuit voltages in accordance with Table 3-1 of NEMA WC 7 or NEMA WC 8.

2.1.2 Conductors

2.1.2.1 Material

Conductors shall conform to all the applicable requirements of Section 2 of NEMA WC 7 or Part 2 of NEMA WC 8 as applicable and shall be annealed copper. Copper conductors may be bare, or tin- or lead-alloy-coated, if required by the type of insulation used.

2.1.2.2 Size

Minimum wire size shall be No. 12 AWG for power and lighting circuits; No. 10 AWG for current transformer secondary circuits; No. 14 AWG for potential transformer, relaying, and control circuits; No. 16 AWG for annunciator circuits; and No. 18 AWG for alarm circuits. Minimum wire sizes for rated circuit voltages of 2,001 volts and above shall not be less than those listed for the applicable voltage in Table 3-1 of Section 3 of NEMA WC 7 or Part 3 of NEMA WC 8, as applicable.

2.1.2.3 Stranding

Conductor stranding classes cited herein shall be as defined in Appendix L of NEMA WC 7 or NEMA WC 8, as applicable. Lighting conductors No. 10 AWG and smaller shall be solid or have Class B stranding. Any conductors used between stationary and moving devices, such as hinged doors or panels, shall have Class H or K stranding. All other conductors shall have Class B or C stranding, except that conductors shown on the drawings, or in the schedule, as No. 12 AWG may be 19 strands of No. 25 AWG, and conductors shown as No. 10 AWG may be 19 strands of No. 22 AWG.

2.1.2.4 Conductor Shielding

Conductor shielding conforming to paragraph 2.7 of NEMA WC 7 or NEMA WC 8,

as applicable, shall be used on power cables having a rated circuit voltage above 2,000 volts. In addition, conductor shielding for shielded cables shall also comply with Section C of AEIC CS5 or AEIC CS6. Strict precautions shall be taken after application of the conductor shielding to prevent the inclusion of voids or contamination between the conductor shielding and the subsequently applied insulation.

2.1.2.5 Separator Tape

Where conductor shielding, strand filling, or other special conductor treatment is not required, a separator tape between conductor and insulation is permitted.

2.1.3 Insulation

2.1.3.1 Insulation Material

Insulation shall be cross-linked thermosetting polyethylene (XLPE) type, meeting the requirements of Section 3 or paragraph 7.7 of NEMA WC 7 as applicable, or an ethylene-propylene rubber (EPR) type meeting the requirements of Part 3 of NEMA WC 8. For shielded cables of rated circuit voltages above 2,000 volts, the following provisions shall also apply:

a. XLPE, if used, shall be tree-retardant.

b. Insulation shall be chemically bonded to conductor shielding.

c. The insulation material and its manufacturing, handling, extrusion and vulcanizing processes, shall all be subject to strict procedures to prevent the inclusion of voids, contamination, or other irregularities on or in the insulation. Insulation material shall be inspected for voids and contaminants. Inspection methods, and maximum allowable void and contaminant content shall be in accordance with Section B of AEIC CS5 or AEIC CS6, as applicable.

d. Cables with repaired insulation defects discovered during factory testing, or with splices or insulation joints, are not acceptable.

2.1.3.2 Insulation Thickness

The insulation thickness for each conductor shall be based on its rated circuit voltage.

a. Power Cables/Single-Conductor Control Cables, 2,000 Volts and Below - The insulation thickness for single-conductor cables rated 2,000 volts and below shall be as required by Table 3-1, Section 3 of NEMA WC 7 or Table 3-1, Part 3, of NEMA WC 8, as applicable. Column "A" thickness of Table 3-1 of NEMA WC 7 will be permitted only for single-conductor cross-linked thermosetting polyethylene insulated cables without a jacket. NEMA WC 8 ethylene-propylene rubber-insulated conductors shall have a jacket. Column "B" thickness shall apply to single-conductor cables that require a jacket and to individual conductors of multiple-conductor cables with an overall jacket.

b. Power Cables, Rated 2,001 Volts and Above - Thickness of insulation for power cables rated 2,001 volts and above shall be in accordance with the following:

(1) Non-shielded cables, 2,001 to 5,000 volts, shall comply with Note 3 to Table 3-1, of either NEMA WC 7 or NEMA WC 8, as applicable.

(2) Shielded cables rated 2,001 volts and above shall comply with Column B of Table B1, of AEIC CS5 or AEIC CS6, as applicable.

c. Multiple-Conductor Control Cables - The insulation thickness of multiple-conductor cables used for control and related purposes shall be as required by Table 7-32 of NEMA WC 7 or Table 7.5.1 of NEMA WC 8 as applicable.

2.1.3.3 Insulation Shielding

Unless otherwise specified, insulation shielding shall be provided for conductors having rated circuit voltages of 2,001 volts and above. The voltage limits above which insulation shielding is required, and the material requirements, are given in Section 4 of NEMA WC 7 or Part 4 of NEMA WC 8, as applicable. The material, if thermosetting, shall meet the wafer boil test requirements as described in Section D of AEIC CS5 or AEIC CS6, as applicable. The method of shielding shall be in accordance with the current practice of the industry; however, the application process shall include strict precautions to prevent voids or contamination between the insulation and the nonmetallic component. Voids, protrusions, and indentations of the shield shall not exceed the maximum allowances specified in Section C of AEIC CS5 or AEIC CS6, as applicable. The cable shall be capable of operating without damage or excessive temperature when the shield is grounded at both ends of each conductor. All components of the shielding system shall remain tightly applied to the components they enclose after handling and installation in accordance with the manufacturer's recommendations. Shielding systems which require heat to remove will not be permitted.

2.1.4 Jackets

All cables shall have jackets meeting the requirements of Section 4 of NEMA WC 7, or Part 4 of NEMA WC 8, as applicable, and as specified herein. Individual conductors of multiple-conductor cables shall be required to have jackets only if they are necessary for the conductor to meet other specifications herein. Jackets of single-conductor cables and of individual conductors of multiple-conductor cables, except for shielded cables, shall be in direct contact and adhere or be vulcanized to the conductor insulation. Multiple-conductor cables and shielded single-conductor cables shall be provided with a common overall jacket, which shall be tightly and concentrically formed around the core. Repaired jacket defects found and corrected during manufacturing are permitted if the cable, including jacket, afterward fully meets these specifications and the requirements of the applicable standards.

2.1.4.1 Jacket Material

The jacket shall be one of the materials listed below. Polyvinyl chloride compounds will not be permitted.

a. General Use

(1) Heavy-duty black neoprene (NEMA WC 8, paragraph 4.4.3).

(2) Heavy-duty chlorosulfonated polyethylene (NEMA WC 8, paragraph 4.4.10).

(3) Heavy-duty cross-linked (thermoset) chlorinated polyethylene (NEMA WC 8, paragraph 4.4.11).

b. Accessible Use Only, 2,000 Volts or Less - Cables installed where they are entirely accessible, such as cable trays and raceways with removable covers, or where they pass through less than 10 feet of exposed conduit only, shall have jackets of one of the materials specified in above paragraph GENERAL USE, or the jackets may be of one of the following:

(1) General-purpose neoprene (NEMA WC 8, paragraph 4.4.4).

(2) Black polyethylene (NEMA WC 8, paragraph 4.4.6).

(3) Thermoplastic chlorinated polyethylene (NEMA WC 8, paragraph 4.4.7).

2.1.4.2 Jacket Thickness

The minimum thickness of the jackets at any point shall be not less than 80 percent of the respective nominal thicknesses specified below.

a. Multiple-Conductor Cables - Thickness of the jackets of the individual conductors of multiple-conductor cables shall be as required by Section 4, Table 4-6 of NEMA WC 7 or Part 4, Table 4-4 of NEMA WC 8, and shall be in addition to the conductor insulation thickness required by Column B of Table 3-1 of the applicable NEMA publication for the insulation used. Thickness of the outer jackets or sheaths of the assembled multiple-conductor cables shall be as required by Section 4, Table 4-7, of NEMA WC 7 or Part 4, Table 4-5, of NEMA WC 8.

b. Single-Conductor Cables - Single-conductor cables, if nonshielded, shall have a jacket thickness as specified in Section 4, Table 4-4 of NEMA WC 7 or Part 4, Table 4-2 of NEMA WC 8. If shielded, the jacket thickness shall be in accordance with the requirements of Section 4, Table 4-5 of NEMA WC 7 or Part 4, Table 4-3 of NEMA WC 8.

2.1.5 Metal-Clad Cable

2.1.5.1 General

The metallic covering shall be corrugated metal, conforming to the applicable requirements of section 4.5 of NEMA WC 7. If the covering is of ferrous metal, it shall be galvanized. Copper grounding conductor(s) conforming to Section 7.8 of NEMA WC 7 shall be furnished for each multiple-conductor metal-clad cable. Assembly and cabling shall be as specified in paragraph CABLING. The metallic covering shall be applied over an inner jacket or filler tape. The cable shall be assembled so that the metallic covering will be tightly bound over a firm core.

2.1.5.2 Jackets

Metal-clad cables may have a jacket under the armor, and shall have a jacket over the armor. Jackets shall comply with the requirements of Section 4.5 of NEMA WC 7. The outer jacket for the metal-clad cable may be

of polyvinyl chloride only if specifically approved.

2.1.6 Identification

2.1.6.1 Color-coding

Insulation of individual conductors of multiple-conductor cables shall be color-coded in accordance with paragraph 5.3 of NEMA WC 8, except that colored braids will not be permitted. Only one color-code method shall be used for each cable construction type. Control cable color-coding shall be in accordance with Table 5-2 of NEMA WC 8. Power cable color-coding shall be black for Phase A, red for Phase B, blue for Phase C, white for grounded neutral, and green for an insulated grounding conductor, if included.

2.1.6.2 Shielded Cables Rated 2,001 Volts and Above

Marking shall be in accordance with Section H of AEIC CS5 or AEIC CS6, as applicable.

2.1.7 Cabling

Individual conductors of multiple-conductor cables shall be assembled with flame-and moisture-resistant fillers, binders, and a lay conforming to Part 5 of NEMA WC 8, except that flat twin cables will not be permitted. Fillers shall be used in the interstices of multiple-conductor round cables with a common covering where necessary to give the completed cable a substantially circular cross section. Fillers shall be non-hygroscopic material, compatible with the cable insulation, jacket, and other components of the cable. The rubber-filled or other approved type of binding tape shall consist of a material that is compatible with the other components of the cable and shall be lapped at least 10 percent of its width.

2.1.8 Dimensional Tolerance

The outside diameters of single-conductor cables and of multiple-conductor cables shall not vary more than 5 percent and 10 percent, respectively, from the manufacturer's published catalog data.

2.2 INSTALLATION INSTRUCTIONS

The following information shall be provided by the cable manufacturer for each size, conductor quantity, and type of cable furnished:

a. Minimum bending radius, in inches - For multiple-conductor cables, this information shall be provided for both the individual conductors and the multiple-conductor cable.

b. Pulling tension and sidewall pressure limits, in pounds.

c. Instructions for stripping semiconducting insulation shields, if furnished, with minimum effort without damaging the insulation.

d. Upon request, compatibility of cable materials and construction with specific materials and hardware manufactured by others shall be stated. Also, if requested, recommendations shall be provided for various cable operations, including installing, splicing, terminating, etc.

2.3 TESTS, INSPECTIONS, AND VERIFICATIONS

2.3.1 Cable Data

Manufacture of the wire and cable shall not be started until all materials to be used in the fabrication of the finished wire or cable have been approved by the Contracting Officer. Cable data shall be submitted for approval including dimensioned sketches showing cable construction, and sufficient additional data to show that these specifications will be satisfied.

2.3.2 Inspection and Tests

Inspection and tests of wire and cable furnished under these specifications shall be made by and at the plant of the manufacturer, and shall be witnessed by the Contracting Officer or his authorized representative, unless waived in writing. The Government may perform further tests before or after installation. Testing in general shall comply with Section 6 of NEMA WC 7 or Part 6 of NEMA WC 8. Specific tests required for particular materials, components, and completed cables shall be as specified in the sections of the above standards applicable to those materials, components, and cable types. Tests shall also be performed in accordance with the additional requirements specified below.

2.3.2.1 Shielded Cables Rated 2,001 Volts or Greater

The following tests shall be performed in addition to those specified above. Section or paragraph references are to AEIC CS5 or AEIC CS6 as applicable, unless otherwise stated.

a. High potential test voltages shall be as required by Table B1 of AEIC CS5 or AEIC CS6 as applicable, rather than by Table 3-1 of NEMA WC 7 or NEMA WC 8.

b. If high potential testing is done with an ac test voltage as specified in paragraph HIGH-VOLTAGE TEST SOURCE, an additional test shall be made using a dc test voltage rated at 75 percent of the specified full dc test voltage, for 5 consecutive minutes.

c. Production sampling tests shall be performed in accordance with Section D. Sampling frequency and failure contingencies shall be in accordance with paragraph G.3. Unless otherwise approved, samples shall not be taken from the middle of extruder runs of insulation or shielding made only for one continuous shipping length of cable, if such sampling will result in the need to repair the sampled area.

d. Partial discharge tests shall be performed in accordance with Section E, paragraph E.2, and Section F.

2.3.2.2 Flame Tests

All multiple-conductor and single-conductor cable assemblies shall pass IEEE Std 383 flame tests, paragraph 2.5, using the ribbon gas burner. Single-conductor cables and individual conductors of multiple-conductor cables shall pass the flame test of NEMA WC 7, paragraph 7.7.3.1.3. If such tests, however, have previously been made on identical cables, these tests need not be repeated. Instead, certified reports of the original qualifying tests shall be submitted. In this case the reports furnished under paragraph REPORTS, shall verify that all of each cable's materials,

construction, and dimensions are the same as those in the qualifying tests.

2.3.2.3 Independent Tests

The Government may at any time make visual inspections, continuity or resistance checks, insulation resistance readings, power factor tests, or dc high-potential tests at field test values. A cable's failure to pass these tests and inspections, or failure to produce readings consistent with acceptable values for the application, will be grounds for rejection of the cable.

2.3.2.4 Reports

Results of tests made shall be furnished. No wire or cable shall be shipped until authorized. Lot number and reel or coil number of wire and cable tested shall be indicated on the test reports.

PART 3 EXECUTION (Not Applicable)

-- End of Section --

16261N

VARIABLE FREQUENCY DRIVE SYSTEMS UNDER 600 VOLTS
09/99

PART 1 GENERAL

1.1 REFERENCES

The publications listed below form a part of this specification to the extent referenced. The publications are referred to within the text by the basic designation only.

U.S. NATIONAL ARCHIVES AND RECORDS ADMINISTRATION (NARA)

47 CFR 15	Radio Frequency Devices

INSTITUTE OF ELECTRICAL AND ELECTRONICS ENGINEERS (IEEE)

IEEE 519	(1992) Harmonic Control in Electrical Power Systems
IEEE C62.41	(1991) Surge Voltages in Low-Voltage AC Power Circuits

U.S. DEPARTMENT OF DEFENSE (DOD)

MIL-STD-461	(Rev. D) Control of Electromagnetic Interference Emissions and Susceptibility

NATIONAL ELECTRICAL MANUFACTURERS ASSOCIATION (NEMA)

NEMA 250	(1991) Enclosures for Electrical Equipment (1000 Volts Maximum)
NEMA ICS 1	(1993) Industrial Control and Systems
NEMA ICS 3.1	(1990) Construction and Guide for Selection, Installation and Operation of Adjustable-Speed Drive Systems
NEMA ICS 6	(1993) Industrial Control and Systems Enclosures
NEMA ICS 7	(1993) Industrial Control and Systems Adjustable-Speed Drives

NATIONAL FIRE PROTECTION ASSOCIATION (NFPA)

NFPA 70	(1999) National Electrical Code

UNDERWRITERS LABORATORIES (UL)

UL 489	(1996; R 1998) Molded-Case Circuit Breakers and Circuit-Breaker Enclosures
UL 508C	(1996) Power Conversion Equipment

1.2 RELATED REQUIREMENTS

Section 16050N, "Basic Electrical Materials and Methods", and Section 16402N, "Distribution Wiring System" apply to this section with additions and modifications specified herein.

1.3 SYSTEM DESCRIPTION

1.3.1 Performance Requirements

1.3.1.1 Electromagnetic Interference Suppression

Computing devices, as defined by 47 CFR 15, MIL-STD-461 rules and regulations, shall be certified to comply with the requirements for class A computing devices and labeled as set forth in part 15.

1.3.1.2 Electromechanical and Electrical Components

Electrical and electromechanical components of the Variable Frequency Drive (VFD) shall not cause electromagnetic interference to adjacent electrical or electromechanical equipment while in operation.

1.3.2 Electrical Requirements

1.3.2.1 Power Line Surge Protection

IEEE C62.41, IEEE 519 Control panel shall have surge protection, included within the panel to protect the unit from damaging transient voltage surges. Surge arrestor shall be mounted near the incoming power source and properly wired to all three phases and ground. Fuses shall not be used for surge protection.

1.3.2.2 Sensor and Control Wiring Surge Protection

I/O functions as specified shall be protected against surges induced on control and sensor wiring installed outdoors and as shown. The inputs and outputs shall be tested in both normal mode and common mode using the following two waveforms:

a. A 10 microsecond by 1000 microsecond waveform with a peak voltage of 1500 volts and a peak current of 60 amperes.

b. An 8 microsecond by 20 microsecond waveform with a peak voltage of 1000 volts and a peak current of 500 amperes.

1.4 SUBMITTALS

Submit the following in accordance with Section 01330, "Submittal Procedures."

SD-02 Shop Drawings

Schematic diagrams; G

Interconnecting diagrams; G

Installation drawings; G

Submit drawings for government approval prior to equipment construction or integration. Modifications to original drawings

made during installation shall be immediately recorded for inclusion into the as-built drawings.

SD-03 Product Data

Variable frequency drives; G

Wires and cables

Equipment schedule

Include data indicating compatibility with motors being driven.

SD-06 Test Reports

VFD Test

Performance Verification Tests

Endurance Test

SD-08 Manufacturer's Instructions

Installation instructions

SD-09 Manufacturer's Field Reports

VFD Factory Test Plan; G

Factory test results

SD-10 Operation and Maintenance Data

Variable frequency drives, Data Package 4

Submit operation and maintenance manuals in accordance with Section 01781N, "Operation and Maintenance Data." Provide service and maintenance information including preventive maintenance, assembly, and disassembly procedures. Include electrical drawings from electrical general sections. Submit additional information necessary to provide complete operation, repair, and maintenance information, detailed to the smallest replaceable unit. Include copies of as-built submittals. Provide routine preventative maintenance instructions, and equipment required. Provide instructions on how to modify program settings, and modify the control program. Provide instructions on drive adjustment, trouble-shooting, and configuration. Provide instructions on process tuning and system calibration.

1.5 QUALITY ASSURANCE

1.5.1 Schematic Diagrams

Show circuits and device elements for each replaceable module. Schematic diagrams of printed circuit boards are permitted to group functional assemblies as devices, provided that sufficient information is provided for government maintenance personnel to verify proper operation of the functional assemblies.

1.5.2 Interconnecting Diagrams

Show interconnections between equipment assemblies, and external interfaces, including power and signal conductors. Include for enclosures and external devices.

1.5.3 Installation Drawings

Show floor plan of each site, with V.F.D.'s and motors indicated. Indicate ventilation requirements, adequate clearances, and cable routes.

1.5.4 Equipment Schedule

Provide schedule of equipment supplied. Schedule shall provide a cross reference between manufacturer data and identifiers indicated in shop drawings. Schedule shall include the total quantity of each item of equipment supplied. For complete assemblies, such as VFD's, provide the serial numbers of each assembly, and a sub-schedule of components within the assembly. Provide recommended spare parts listing for each assembly or component.

1.5.5 Installation instructions

Provide installation instructions issued by the manufacturer of the equipment, including notes and recommendations, prior to shipment to the site. Provide operation instructions prior to acceptance testing.

1.5.6 Factory Test Results

Document test results and submit to government within 7 working days after completion of test.

1.6 DELIVERY AND STORAGE

Equipment delivered and placed in storage shall be stored with protection from the weather, humidity and temperature variations, dirt and dust, or other contaminants.

1.7 COORDINATION

Coordinate layout and installation of enclosed controllers with other construction including conduit, piping, equipment, and adjacent surfaces. Maintain required workspace clearances and required clearances for equipment access doors and panels. Coordinate size and location of concrete bases. Cast anchor-bolt inserts into bases. Concrete, reinforcement, and formwork requirements are specified in Division 3 Section, "Cast-in-Place Concrete". Coordinate features of enclosed controllers and accessory devices with pilot devices and control circuits to which they connect. Coordinate features, accessories, and functions of each enclosed controller with ratings and characteristics of supply circuit, motor, required control sequence, and duty cycle of motor and load.

1.8 WARRANTY

The complete system shall be warranted by the manufacturer for a period of two years after successful completion of the acceptance test. Any component failing to perform its function as specified and documented shall be repaired or replaced by the contractor at no additional cost to the Government. Items repaired or replaced shall be warranted for an

additional period of at least one year from the date that it becomes functional again, as specified in the FAR CLAUSE 52.246-21.

1.9 MAINTENANCE

1.9.1 Spare Parts

Manufacturers shall provide spare parts:

a. Six (6) of each type of fuse

b. One (1) keypad/display

c. Ten (10) lamps for indicating devices

d. Two (2) of each air filter

1.9.2 Maintenance Support

During the warranty period, the Contractor shall provide on-site, on-call maintenance services by Contractor's personnel on the following basis: The service shall be on a per-call basis with 36 hour response. Contractor shall support the maintenance of all hardware and software of the system. Warranty services shall include travel, local transportation, living expenses, and labor rates of the service personnel while responding to the service request.

PART 2 PRODUCTS

2.1 VARIABLE FREQUENCY DRIVES (VFD)

Provide frequency drive to control the speed of the indicated induction motor(s) in conformance with the requirements of NEMA ICS 7. The VFD shall include the following minimum functions, features and ratings.

a. Input circuit breaker per UL 489 or fusible disconnect switch with a minimum of 65,000 amps symmetrical interrupting capacity and door interlocked external operator. If fusible disconnect is provided, supply fast acting SCR input fuses rated per drive manufacturer's recommendations.

b. Incoming power connection shall be via top entry copper bus bar originating from the motor control center. Motor leads shall exit from the bottom of the drive enclosure.

c. A converter stage per UL 508C shall change fixed voltage, fixed frequency, ac line power to a fixed dc voltage. The converter shall utilize a full wave bridge design incorporating diode rectifiers. Silicon Controlled Rectifiers (SCR) are not acceptable. The converter shall be insensitive to three phase rotation of the ac line and shall not cause displacement power factor of less than .95 lagging under any speed and load condition.

d. An inverter stage shall change fixed dc voltage to variable frequency, variable voltage, ac for application to a standard NEMA design B squirrel cage motor. The inverter shall be switched in a manner to produce a sine coded pulse width modulated (PWM) output waveform.

e. The VFD shall be capable of supplying 110 percent of rated full load current for one minute at maximum ambient temperature.

f. The VFD shall be designed to operate from a 480 volt, + or - 10 percent, three phase, 60 Hz supply, and control motors with a corresponding voltage rating.

g. Acceleration and deceleration time shall be independently adjustable from one second to 120 seconds.

h. Adjustable full-time current limiting shall limit the current to a preset value which shall not exceed 110 percent of the controller rated current. The current limiting action shall maintain the V/Hz ratio constant so that variable torque can be maintained. Short time starting override shall allow starting current to reach 150 percent of controller rated current to maximum starting torque.

i. The controllers shall be capable of producing an output frequency over the range of 3 Hz to 60 Hz (20 to one speed range), without low speed cogging. Over frequency protection shall be included such that a failure in the controller electronic circuitry shall not cause frequency to exceed 110 percent of the maximum controller output frequency selected.

j. Minimum and maximum output frequency shall be adjustable over the following ranges: 1) Minimum frequency 3 Hz to 50 percent of maximum selected frequency; 2) Maximum frequency 40 Hz to 60 Hz.

k. The controller efficiency at any speed shall not be less than 96 percent.

l. The controllers shall be capable of being restarted into a coasting motor without tripping.

m. Protection of power semiconductor components shall be accomplished without the use of fast acting semiconductor output fuses. Subjecting the controllers to any of the following conditions shall not result in component failure or the need for input fuse replacment:

1. Short circuit at controller output

2. Ground fault at controller output

3. Open circuit at controller output

4. Input undervoltage

5. Input overvoltage

6. Loss of input phase

7. AC line switching transients

8. Instantaneous overload

9. Sustained overload exceeding 115 percent of controller rated current

10. Over temperature

11. Phase reversal

n. Solid state motor overload protection shall be included such that current exceeding an adjustable threshold shall activate a timing circuit. Should current remain above the threshold continuously for the timing period, the controller will automatically shut down.

o. A slip compensation circuit shall be included which will sense changing motor load conditions and adjust output frequency to provide speed regulation of NEMA B motors to within + / - 0.5 percent of maximum speed without the necessity of a tachometer generator.

p. The VFD shall be factory set for manual restart after the first protective circuit trip for malfunction (overcurrent,undervoltage, overvoltage or overtemperature) or an interruption of power. The VFD shall be capable of being set for automatic restart after a selected time delay. If the drive faults again within a specified time period (adjustable 0-60 seconds), a manual restart will be required.

q. Displacement Power Factor: Between 1.0 and 0.95, lagging over entire range of operating speed and load.

r. Input Signals:

1. Qty. 2 - 4 to 20 mA DC analog inputs. Include a programmable filter to remove possible input oscillation.

2. Qty. 4 - 24VDC, discrete inputs.

s. Output Signals:

1. Qty. 1 - 4 to 20 mA DC analog outputs.

2. Qty. 2 - 24VDC or Form-C relay discrete outputs.

t. Proportional, Integral & Derivative (PID) Control: Programmable to regulate drive speed based upon setpoint and feedback values received by two analog inputs.

u. Operating Ambient Temperature: 0 degrees C to 40 degrees C and 95 percent humidity, non-condensing.

v. Loss of Load: The drive shall be capable of determining if the load is lost as can happen with a pump without water. The drive shall be capable of showing the fault on the digital display and of programming a discrete output to close during a fault condition. The drive should not deliver false fault trips due to acceleration from zero speed.

w. Safety Interlocks: Furnish terminals for remote contact to inhibit starting.

x. The VFD shall include external fault reset capability. All the necessary logic to accept an external fault reset contact shall be included.

y. Provide critical speed lockout circuitry to prevent operating at frequencies with critical harmonics that cause resonant vibrations. The VFD shall have a minimum of three user selectable bandwidths.

z. Panel-Mounted Operator Station: All drives shall have the same interface, regardless of horsepower. The interface shall include an integral alphanumeric digital display. The display shall be in complete English words; programming with codes is not acceptable. The keypad shall be used for local control of the drive, for setting all required parameters and for scrolling through displays and menus.

aa. Provide the following operator control and monitoring capability:

1. Manual speed adjustment.

2. Hand-Off-Auto (HOA) switch.

3. Power on light.

4. Drive run indication.

5. Local display.

6. Input voltage.

7. Output voltage.

8. Output frequency.

9. Output current.

10. Drive faults, current and historical.

11. Elapsed running time.

ab. Provide contactor and fuses for motor winding heaters. The VFD shall disengage power to the motor winding heaters whenever the motor is in use. When the motor is not in use the motor winding heaters shall be energized. Interlock power to motor winding heater with VFD disconnect or circuit breaker such that if the disconnect is in the off position power to the motor winding heater is also interrupted.

ac. Provide 3 percent line reactance filter at input of VFD.

2.2 ENCLOSURES

Provide equipment enclosures conforming to NEMA 250, NEMA ICS 7, NEMA ICS 6.

a. Enclosures: NEMA 250, Type 1, unless otherwise indicated to comply with environmental conditions at installed location.

b. Finish: Manufacturer's standard enamel.

c. Door Interlocks: Furnish mechanical means to prevent opening of equipment with power connected, or to disconnect power if door is

opened, include means for defeating interlock by qualified persons.

2.3 WIRES AND CABLES

All wires and cables shall conform to NEMA 250, NEMA ICS 7, NFPA 70.

2.4 NAMEPLATES

Nameplates external to NEMA enclosures shall conform with the requirements of Section 16050N, "Basic Electrical Materials and Methods." Nameplates internal to enclosures shall be manufacturer's standard, with the exception that they must be permanent.

2.5 SOURCE QUALITY CONTROL

2.5.1 VFD Factory Test Plan

To ensure quality, each VFD shall be subject to a series of in-plant quality control inspections before approval for shipment from the manufacturer's facilities. Provide test plans and test reports.

2.6 MOTOR PROTECTION

Provide motor mounted reflected wave trap filter in NEMA 4X enclosure for each motor connected to a variable speed drive. Filter shall protect motor from voltage wave reflections at frequencies of up to 12kHz and voltage levels above 1,000 volts. Install filter and provide fusing, per manufacturer's recommendations.

PART 3 EXECUTION

3.1 INSTALLATION

Per NEMA ICS 3.1, install equipment in accordance with the approved manufacturer's printed installation drawings, instructions, wiring diagrams, and as indicated on project drawings and the approved shop drawings. A field representative of the drive manufacturer shall supervise the installation of all equipment, and wiring.

3.2 FIELD QUALITY CONTROL

Specified products shall be tested as a system for conformance to specification requirements prior to scheduling the acceptance tests. Contractor shall conduct performance verification tests in the presence of Government representative, observing and documenting complete compliance of the system to the specifications. Contractor shall submit a signed copy of the test results, certifying proper system operation before scheduling tests.

3.2.1 VFD Test

A proposed test plan shall be submitted to the contracting officer at least 28 calendar days prior to proposed testing for approval. The tests shall conform to NEMA ICS 1, NEMA ICS 7, and all manufacturer's safety regulations. The Government reserves the right to witness all tests and review any documentation. The contractor shall inform the Government at least 14 working days prior to the dates of testing. Contractor shall provide video tapes, if available, of all training provided to the Government for subsequent use in training new personnel. All training

aids, texts, and expendable support material for a self-sufficient presentation shall be provided, the amount of which to be determined by the contracting officer.

3.2.2 Performance Verification Tests

"Performance Verification Test" plan shall provide the step by step procedure required to establish formal verification of the performance of the VFD. Compliance with the specification requirements shall be verified by inspections, review of critical data, demonstrations, and tests. The Government reserves the right to witness all tests, review data, and request other such additional inspections and repeat tests as necessary to ensure that the system and provided services conform to the stated requirements. The contractor shall inform the Government 14 calendar days prior to the date the test is to be conducted.

3.3 DEMONSTRATION

3.3.1 Training

Provide one training day of eight (8) hours on-site.

3.3.1.1 Instructions to Government Personnel

Provide the services of competent instructors who will give full instruction to designated personnel in operation, maintenance, calibration, configuration, and programming of the complete control system. Orient the training specifically to the system installed. Instructors shall be thoroughly familiar with the subject matter they are to teach. The Government personnel designated to attend the training will have a high school education or equivalent. A training day is defined as eight hours of instruction, including two 15-minute breaks and excluding lunch time; Monday through Friday. Provide a training manual for each student at each training phase which describes in detail the material included in each training program. Provide one additional copy for archiving. Provide equipment and materials required for classroom training. Provide a list of additional related courses, and offers, noting any courses recommended. List each training course individually by name, including duration, approximate cost per person, and location of course. Unused copies of training manuals shall be turned over to the Government at the end of last training session.

-- End of Section --

SECTION 16264A

DIESEL-GENERATOR SET, STATIONARY, STANDBY APPLICATIONS
08/01

PART 1 GENERAL

1.1 REFERENCES

The publications listed below form a part of this specification to the extent referenced. The publications are referred to in the text by basic designation only.

AMERICAN NATIONAL STANDARDS INSTITUTE (ANSI)

ANSI C12.11	(1987; R 1993) Instrument Transformers for Revenue Metering, 10 kV BIL through 350 kV BIL (0.6 kV NSV through 69 kV NSV)

AMERICAN SOCIETY FOR TESTING AND MATERIALS (ASTM)

ASTM A 53/A 53M	(1999b) Pipe, Steel, Black and Hot-Dipped, Zinc-Coated, Welded and Seamless
ASTM A 106	(1999el) Seamless Carbon Steel Pipe for High-Temperature Service
ASTM A 135	(1997c) Electric-Resistance-Welded Steel Pipe
ASTM A 181/A 181M	(2000) Carbon Steel Forgings for General-Purpose Piping
ASTM A 234/A 234M	(2000) Piping Fittings of Wrought Carbon Steel and Alloy Steel for Moderate and High Temperature Service
ASTM D 975	(1998b) Diesel Fuel Oils

ASME INTERNATIONAL (ASME)

ASME B16.3	(1998) Malleable Iron Threaded Fittings
ASME B16.5	(1996; B16.5a) Pipe Flanges and Flanged Fittings NPS 1/2 thru NPS 24
ASME B16.11	(1996) Forged Fittings, Socket-Welding and Threaded
ASME B31.1	(1998) Power Piping
ASME BPV VIII Div 1	(1998) Boiler and Pressure Vessel Code; Section VIII, Pressure Vessels Division 1 - Basic Coverage
ASME BPV IX	(1998) Boiler and Pressure Vessel Code;

	Section IX, Welding and Brazing Qualifications

ELECTRICAL GENERATING SYSTEMS ASSOCIATION (EGSA)

EGSA 101P	(1995a) Engine Driven Generator Sets

INSTITUTE OF ELECTRICAL AND ELECTRONICS ENGINEERS (IEEE)

IEEE C2	(1997) National Electrical Safety Code
IEEE Std 1	(1986; R 1992) General Principles for Temperature Limits in the Rating of Electric Equipment and for the Evaluation of Electrical Insulation
IEEE Std 81	(1983) Guide for Measuring Earth Resistivity, Ground Impedance, and Earth Surface Potentials of a Ground System (Part 1)
IEEE Std 100	(1997) IEEE Standard Dictionary of Electrical and Electronics Terms
IEEE Std 120	(1989) Electrical Measurements in Power Circuits
IEEE Std 519	(1992) Harmonic Control in Electrical Power Systems

MANUFACTURERS STANDARDIZATION SOCIETY OF THE VALVE AND FITTINGS INDUSTRY (MSS)

MSS SP-58	(1993) Pipe Hangers and Supports - Materials, Design and Manufacture
MSS SP-69	(1996) Pipe Hangers and Supports - Selection and Application
MSS SP-80	(1997) Bronze Gate, Globe, Angle and Check Valves

NATIONAL ELECTRICAL MANUFACTURERS ASSOCIATION (NEMA)

NEMA AB 1	(1993) Molded Case Circuit Breakers and Molded Case Switches
NEMA ICS 2	(1993) Industrial Controls and Systems Controllers, Contactors, and Overload Relays Rated Not More Than 2,000 Volts AC or 750 Volts DC
NEMA ICS 6	(1993) Industrial Control and Systems, Enclosures
NEMA MG 1	(1998) Motors and Generators
NEMA PB 1	(1995) Panelboards

NEMA SG 3	(1995) Power Switching Equipment

NATIONAL FIRE PROTECTION ASSOCIATION (NFPA)

NFPA 30	(1996; Errata TIA 96-2) Flammable and Combustible Liquids Code
NFPA 37	(1998) Installation and Use of Stationary Combustion Engines and Gas Turbines
NFPA 70	(1999) National Electrical Code

SOCIETY OF AUTOMOTIVE ENGINEERS INTERNATIONAL (SAE)

SAE ARP 892	(1965; R 1994) D-C Starter-Generator, Engine
SAE J 537	(1996) Storage Batteries

UNDERWRITERS LABORATORIES (UL)

UL 489	(1996; Rev thru Dec 1998) Molded-Case Circuit Breakers, Molded-Case Switches, and Circuit-Breaker Enclosures
UL 1236	(1994; Rev thru Mar 1999) Battery Chargers for Charging Engine-Starter Batteries

1.2 SUBMITTALS

Government approval is required for submittals with a "G" designation; submittals not having a "G" designation are for information only. When used, a designation following the "G" designation identifies the office that will review the submittal for the Government. The following shall be submitted in accordance with Section 01330 SUBMITTAL PROCEDURES:

SD-02 Shop Drawings

Layout; G
Drawings; G

a. Base-mounted equipment, complete with base and attachments including anchor bolt template and recommended clearances for maintenance and operation.

b. Starting system.

c. Fuel system.

d. Cooling system.

e. Exhaust system.

f. Electric wiring of relays, breakers, programmable controllers, and switches including single line and wiring diagrams.

g. Lubrication system, including piping, pumps, strainers, filters, heat exchangers for lube oil and turbocharger cooling,

electric heater, controls and wiring.

h. Location, type, and description of vibration isolation devices.

i. The safety system, including wiring schematics.

j. One-line schematic and wiring diagrams of the generator, exciter, regulator, governor, and all instrumentation.

k. Panel layouts.

l. Mounting and support for each panel and major piece of electrical equipment.

m. Engine-generator set rigging points and lifting instructions.

Acceptance; G

Drawings which accurately depict the as-built configuration of the installation, upon acceptance of the diesel-generator set installation. Layout drawings shall be revised to reflect the as-built conditions and submitted with the as-built drawings.

SD-03 Product Data

Performance Tests;

Calculations of the engine and generator output power capability, including efficiency and parasitic load data.

Sound Limitations; G

Sound power level data for the packaged unit operating at 100% load in a free field environment. The data should demonstrate compliance with the sound limitation requirements of this specification.

Generator;

Each generator KW rating and short circuit capacity (both symmetric and asymmetric).

Day Tank;

Calculations for the capacity of each day tank, including allowances for recirculated fuel, usable tank capacity, and duration of fuel supply.

Power Factor;

Generator capability curve showing generator kVA output (kW vs. kvar) for both leading and lagging power factors ranging from 0 to 1.0.

Heat Rejected to Engine-Generator Space;

Manufacturers data to quantify heat rejected to the space with the engine generator set at rated capacity.

Cooling System; G

a. The maximum and minimum allowable inlet temperatures of the coolant fluid.

b. The maximum allowable temperature rise in the coolant fluid through the engine.

Manufacturer's Catalog; G

Manufacturer's standard catalog data describing and depicting each engine-generator set and all ancillary equipment in sufficient detail to demonstrate specification compliance.

Vibration Isolation; G

Vibration isolation system performance data for the range of frequencies generated by the engine-generator set during operation from no load to full load and the maximum vibration transmitted to the floor. Description of seismic qualification of the engine-generator mounting, base, and vibration isolation.

Instructions; G

Instructions including: the manufacturer's pre-start checklist and precautions; startup procedures for test mode, manual-start mode, and automatic-start mode, (as applicable); running checks, procedures, and precautions; and shutdown procedures, checks, and precautions. Instructions shall include procedures for interrelated equipment (such as heat recovery systems, co-generation, load-shedding, and automatic transfer switches). Instructions shall be weatherproof, laminated in plastic, framed, and posted where directed. Posted data shall include wiring and control diagrams showing the key mechanical and electrical control elements, and a diagrammatic layout of the system.

Experience; G

Statement showing that the engine-generator set manufacturer has a minimum of 3 years experience in the manufacture, assembly and sale of stationary diesel engine-generator sets for commercial and industrial use.

Field Engineer; G

A letter listing the qualifications, schools, formal training, and experience of the field engineer.

Site Welding; G

A letter listing the welder qualifying procedures for each welder, complete with supporting data such as test procedures used, what was tested to, and a list of the names of all welders and their qualifications symbols.

Site Visit; G

A site visit letter stating the date the site was visited and

listing discrepancies found.

SD-06 Test Reports

Onsite Inspection and Tests; G

a. A letter giving notice of the proposed dates of all onsite inspections and tests at least 14 days prior to beginning tests.

b. A detailed description of the Contractor's proposed procedures for onsite tests including the test including the test plan and a listing of equipment necessary to perform the tests. Submission shall be at least 14 days prior to beginning tests.

c. Six copies of the onsite test data described below in 8-1/2 x 11 inch 3-ring binders with a separate section for each test. Sections shall be separated by dividers with tabs. Data plots shall be full size 8-1/2 x 11 inches minimum), showing all grid lines, with full resolution.

(1) A description of the procedures for onsite tests.

(2) A list of equipment used, with calibration certifications.

(3) A copy of measurements taken, with required plots and graphs.

(4) The date of testing.

(5) The parameters verified.

(6) The condition specified for the parameter.

(7) The test results, signed and dated.

(8) A description of all adjustments made.

SD-07 Certificates

Vibration Isolation; G

Torsional analysis including prototype testing or calculations which certify and demonstrate that no damaging or dangerous torsional vibrations will occur when the prime mover is connected to the generator, at synchronous speeds, plus/minus 10%.

Prototype Tests; G

Manufacturer's standard certification that prototype tests were performed for the generator model proposed.

Reliability and Durability; G

Documentation which cites engines and generators in similar service to demonstrate compliance with the requirements of this specification. Certification does not exclude annual technological improvements made by a manufacturer in the basic standard model set on which experience was obtained, provided parts interchangeability has not been substantially affected and

the current standard model meets all the performance requirements of this specification. For each different set, 2 like sets shall have performed satisfactorily in a stationary power application, independent and separate from the physical location of the manufacturer's and assembler's facilities, for a minimum of 2 consecutive years without any failure to start, including periodic exercise. The certification shall state that for the set proposed to meet this specification, there were no failures resulting in downtime for repairs in excess of 72 hours or any failure due to overheating during 2 consecutive years of service. Like sets are of the same model, speed, bore, stroke, number and configuration of cylinders, and output power rating. Like generators are of the same model, speed, pitch, cooling, exciter, voltage regulator and output power rating. A list shall be provided with the name of the installations, completion dates, and name and telephone number of a point of contact.

Emissions; G

A certification from the engine manufacturer stating that the engine exhaust emissions meet federal, EPA Tier II regulations. At a minimum, this certification shall include emission factors for criteria pollutants including nitrogen oxides, carbon monoxide, particulate matter, sulfur dioxide, non-methane hydrocarbon, and for hazardous air pollutants (HAPs).

Sound limitations; G

A certification from the manufacturer stating that the sound emissions meet the specification.

Materials and Equipment; G

A letter stating that where materials or equipment are specified to comply with requirements of UL 2200, or other standards, written proof of such compliance has been obtained. The label or listing of the specified agency, or a written certificate from an approved, nationally recognized testing organization equipped to perform such services, stating that the items have been tested and conform to the requirements and testing methods of the specified agency are acceptable as proof.

Factory Inspection and Tests; G

A certification that each engine generator set passed the factory tests and inspections and a list of the test and inspections.

Inspections; G

A letter certifying that all facilities are complete and functional, that each system is fully functional, and that each item of equipment is complete, free from damage, adjusted, and ready for beneficial use.

Cooling System; G

Certification that the engine-generator set and cooling system function properly in the ambient temperatures specified.

SD-10 Operation and Maintenance Data

Submit operation and maintenance manuals in accordance with Section 01781N, "Operation and Maintenance Data". Provide service and maintenance information including preventative maintenance, assembly and disassembly procedures. Include electrical drawings. Submit all information necessary to provide complete operation, repair and maintenance, detailed to teh smallest replaceable unit. Provide routine preventative maintenance instructions and equipment required. Provide instructions on troubleshooting, adjustments and system calibration.

1.3 SYSTEM DESCRIPTION

Each engine-generator set shall be provided and installed complete and totally functional, with all necessary ancillary equipment to include air filtration; starting system; generator controls, protection, and isolation; instrumentation; lubrication; fuel system; cooling system; and engine exhaust system. Each engine generator set shall satisfy the requirements specified in the Engine Generator Parameter Schedule.

1.3.1 Engine-Generator Parameter Schedule

ENGINE GENERATOR PARAMETER SCHEDULE

Service Load	800 kW
Power Factor	0.8 lagging
Motor Starting kVA (maximum)	1350 kVA
Maximum Speed	1800 rpm
Engine-Generator Application	stand-alone
Engine Cooling Type	water/ethylene glycol
Heat Exchanger Type	fin-tube
Governor Type	Isochronous
Frequency Bandwidth steady state	± 0.25%
Frequency Regulation (No load to full load)	1%.
Voltage Regulation (No load to full load)	± 1% (max.)
Voltage Bandwidth (steady state)	± 0.5%
Frequency	60 Hz
Voltage	480 volts
Phases	3 Phase, Wye

Minimum Generator Reactance	14 percent Subtransient
Nonlinear Loads	660 kVA
Max Step Load Increase	50% of Service Load at .4 PF
Max Step Load Decrease (without shutdown)	100 % of Service Load at 0.8 PF
Max Time to Start and be Ready to Assume Load	10 seconds
Max Summer Outdoor Temp (Ambient)	105 degrees
Min Winter Outdoor Temp (Ambient)	0 degrees
Installation Elevation	50 above sea level

1.3.2 Output Capacity

Each generator set shall provide power equal to the sum of service load plus the machine's efficiency loss and associated ancillary equipment loads. Rated output capacity shall also consider engine and/or generator oversizing required to meet requirements in paragraph Engine-Generator Parameter Schedule.

1.3.3 Power Rating

Standby ratings shall be in accordance with EGSA 101P.

1.4 GENERAL REQUIREMENTS

1.4.1 Engine-Generator Set

Each set shall consist of one engine, one generator, and one exciter, mounted, assembled, and aligned on one base; and all other necessary ancillary equipment which may be mounted separately. Sets shall be assembled and attached to the base prior to shipping. Set components shall be environmentally suitable for the locations shown and shall be the manufacturer's standard product offered in catalogs for commercial or industrial use. A generator strip heater shall be provided for moisture control when the generator is not operating.

1.4.2 Nameplates

Each major component of this specification shall have the manufacturer's name, type or style, model or serial number, and rating number on a plate secured to the equipment. As a minimum, nameplates shall be provided for: Engines; Relays; Generators; Day tanks; Transformers (CT & PT); Regulators; Pumps and pump motors; Governors; Generator Breaker; Economizers; Heat exchangers (other than base-mounted).

Engines Relays

Generators	Day tanks
Transformers (CT & PT)	Regulators
Pumps and pump motors	Governors
Generator Breaker	Economizers
Heat exchangers (other than base-mounted)	

Where the following equipment is provided as a standard component by the diesel-engine generator set manufacturer, the nameplate information may be provided in the maintenance manual in lieu of nameplates.

Battery charger	Heaters
Exhaust mufflers	Exciters
Switchgear	Silencers
Battery	

1.4.3 Personnel Safety Device

Exposed moving parts, parts that produce high operating temperatures, parts which may be electrically energized, and parts that may be a hazard to operating personnel during normal operation shall be insulated, fully enclosed, guarded, or fitted with other types of safety devices. The safety devices shall be installed so that proper operation of the equipment is not impaired.

1.4.4 Verification of Dimensions

Before performing work, the premises shall be visited and details of the work verified. The Contracting Officer shall be advised in writing of any discrepancies before performing any work.

1.4.5 Conformance to Codes and Standards

Where equipment is specified to conform to requirements of any code or standard such as UL, the design, fabrication and installation shall conform to the code.

1.4.6 Site Welding

Structural members shall be welded in accordance with Section 05090 WELDING, STRUCTURAL. For all other welding, procedures and welders shall be qualified in accordance with ASME BPV IX. Welding procedures qualified by others, and welders and welding operators qualified by a previously qualified employer may be accepted as permitted by ASME B31.1. Welder qualification tests shall be performed for each welder whose qualifications are not in compliance with the referenced standards. The Contracting Officer shall be notified 24 hours in advance of qualification tests. The qualification tests shall be performed at the work site if practical. The welder or welding operator shall apply the assigned personal symbol near each weld made as a permanent record

1.4.7 Engine Generator Set Enclosure

The engine generator set sound attenuated enclosure shall be corrosion resistant and fully weather resistant. The enclosure shall contain all set components and provide ventilation to permit operation at rated load under

secured conditions. Doors shall be provided for access to all controls and equipment requiring periodic maintenance or adjustment. Removable panels shall be provided for access to components requiring periodic replacement. The enclosure shall be capable of being removed without disassembly of the engine-generator set or removal of components other than exhaust system. The enclosure shall reduce the noise of the generator set to within the limits specified in the paragraph SOUND LIMITATIONS.

1.4.8 Vibration Isolation

The maximum engine-generator set vibration in the horizontal, vertical and axial directions shall be limited to 6 mils (peak-peak RMS), with an overall velocity limit of RMS, for all speeds through 110% of rated speed. The engine-generator set shall be provided with vibration-isolation in accordance with the manufacturer's standard recommendation. Where the vibration-isolation system does not secure the base to the structure floor or unit foundation, seismic restraints shall be provided in accordance with the seismic parameters specified.

1.4.9 Experience

Each component manufacturer shall have a minimum of 3 years experience in the manufacture, assembly and sale of components used with stationary diesel engine-generator sets for commercial and industrial use. The engine-generator set manufacture/assembler shall have a minimum of 3 years experience in the manufacture, assembly and sale of stationary diesel engine-generator sets for commercial and industrial use.

1.4.10 Field Engineer

The engine-generator set manufacturer or assembler shall furnish a qualified field engineer to supervise the complete installation of the engine-generator set, assist in the performance of the onsite tests, and instruct personnel as to the operational and maintenance features of the equipment. The field engineer shall have attended the engine-generator manufacturer's training courses on installation and operation and maintenance for engine generator sets.

1.5 STORAGE AND INSTALLATION

The Contractor shall properly protect material and equipment in accordance with the manufacturers recommended storage procedures, before, during, and after installation. Stored items shall be protected from the weather and contamination. During installation, piping and similar openings shall be capped to keep out dirt and other foreign matter.

1.6 OPERATION AND MAINTENANCE MANUALS

The operation and maintenance manuals shall be submitted and approved prior to commencing onsite tests.

1.6.1 Operation Manual

Three copies of the manufacturers standard operation manual. The manual shall include:

a. Step-by-step procedures for system startup, operation, and shutdown;

b. Drawings, diagrams, and single-line schematics to illustrate and define the electrical, mechanical, and hydraulic systems with their controls, alarms, and safety systems;

c. Procedures for interface and interaction with related systems to include automatic transfer switches.

1.6.2 Maintenance Manual

Three copies of the manufacturers standard maintenance manual.

a. Procedures for each routine maintenance item.

b. The manufacturer's recommended maintenance schedule.

c. A component list which includes the manufacturer's name, address, type or style, model or serial number, rating, and catalog number for the major components listed in paragraph GENERAL REQUIREMENTS.

d. A list of spare parts for each piece of equipment and a complete list of materials and supplies needed for operation.

1.7 SPECIAL TOOLS AND FILTERS

Two sets of special tools and two sets of filters required for maintenance shall be provided. Special tools are those that only the manufacturer provides, for special purposes, or to reach otherwise inaccessible parts. One handset shall be provided for each electronic governor when required to indicate and/or change governor response settings. Two complete sets of filters shall be supplied in a suitable storage box. these filters shall be in addition to filters replaced after testing.

PART 2 PRODUCTS

2.1 MATERIALS AND EQUIPMENT

Materials and equipment shall be as specified.

2.1.1 Circuit Breakers, Low Voltage

NEMA AB 1, UL 489, and NEMA SG 3.

2.1.2 Filter Elements (Fuel-oil, Lubricating-oil, and Combustion-air)

Manufacturer's standard.

2.1.3 Instrument Transformers

ANSI C12.11.

2.1.4 Pipe (Sleeves, Fuel/Lube-oil, Compressed-Air, Coolant and Exhaust)

ASTM A 53/A 53M, ASTM A 106 or ASTM A 135, steel pipe. Pipe smaller than 2 inches shall be Schedule 80. Pipe 2 inches and larger shall be Schedule 40.

2.1.5 Pipe Flanges and Fittings

a. Pipe Flanges and Flanged Fittings: ASTM A 181/A 181M, Class 60,

or ASME B16.5, Grade 1, Class 150.

b. Pipe Welding Fittings: ASTM A 234/A 234M, Grade WPB or WPC, Class 150, or ASME B16.11, 3000 lb.

c. Threaded Fittings: ASME B16.3, Class 150.

d. Valves: MSS SP-80, Class 150.

e. Gaskets: Manufacturers Standard.

2.1.6 Pipe Hangers

MSS SP-58 and MSS SP-69.

2.1.7 Electrical Enclosures

2.1.7.1 General

NEMA ICS 6.

2.1.7.2 Panelboards

NEMA PB 1.

2.1.8 Electric Motors

Electric motors shall conform to the requirements of NEMA MG 1. Motors shall have sealed ball bearings, a maximum speed of 1800 rpm and integral automatic or manual reset thermal overload protectors. Motors used indoors shall have drip proof frames; those used outside shall be totally enclosed. AC motors 1/2 Hp or smaller, shall be for standard voltage 115 volts, 60 Hz, single phase power.

2.1.9 Motor Controllers

Motor controllers and starters shall conform to the requirements of NFPA 70 and NEMA ICS 2.

2.2 ENGINE

Each engine shall operate on No. 2-D diesel conforming to ASTM D 975, shall be designed for stationary applications and shall be complete with ancilliaries. The engine shall be a standard production model described in the manufacturer's catalog. The engine shall be naturally aspirated, scavenged, supercharged or turbocharged. The engine shall be four-stroke-cycle and compression-ignition type. The engine shall be vertical inline, V-, or opposed-piston type, with a solid cast block or individually cast cylinders. The engine shall have a minimum of two cylinders. Opposed-piston type engines shall have no less than four cylinders. Each block shall have a coolant drain port. Each engine shall be equipped with an overspeed sensor.

2.3 FUEL SYSTEM

The fuel system for each engine generator set shall conform to the requirements of NFPA 30 and NFPA 37 and contain the following elements.

2.3.1 Pumps

2.3.1.1 Main Pump

Each engine shall be provided with an engine driven pump. The pump shall supply fuel at a minimum rate sufficient to provide the amount of fuel required to meet the performance indicated within the parameter schedule. The fuel flow rate shall be based on meeting the load requirements and all necessary recirculation.

2.3.2 Filter

A minimum of one full flow fuel filter shall be provided for each engine. The filter shall be readily accessible and capable of being changed without disconnecting the piping or disturbing other components. The filter shall have inlet and outlet connections plainly marked.

2.3.3 Relief/Bypass Valve

A relief/bypass valve shall be provided to regulate pressure in the fuel supply line, return excess fuel to a return line, and prevent the build-up of excessive pressure in the fuel system.

2.3.4 Fuel Supply System

The fuel supply from the main storage of fuel with all piping and valving to the generator set shall be as specified in Division 15.

2.4 LUBRICATION

Each engine shall have a separate lube-oil system conforming to NFPA 30 and NFPA 37. Each system shall be pressurized by engine-driven oil pumps. Each system shall be furnished with a relief valve for oil pressure regulation (for closed systems) and a dip-stick for oil level indications. The crankcase shall be vented in accordance with the manufacturer's recommendation except that it shall not be vented to the engine exhaust system. Crankcase breathers, if provided on engines installed in buildings or enclosures, shall be piped to vent to the outside. The system shall be readily accessible for service such as draining, refilling, etc. Each system shall permit addition of oil and have oil-level indication with the set operating. The system shall utilize an oil cooler as recommended by the engine manufacturer.

2.4.1 Filter

One full-flow filter shall be provided for each pump. The filter shall be readily accessible and capable of being changed without disconnecting the piping or disturbing other components. The filter shall have inlet and outlet connections plainly marked.

2.4.2 Lube-Oil Sensors

Each engine shall be equipped with lube-oil pressure sensors. Pressure sensors shall be located downstream of the filters and provide signals for required indication and alarms.

2.5 COOLING SYSTEM

Each engine cooling system shall operate automatically while the engine is running. Each cooling system shall be sized for the maximum summer outdoor

design temperature and site elevation. Water-cooled system coolant shall use a combination of water and ethylene-glycol sufficient for freeze protection at the minimum winter outdoor temperature specified. The maximum temperature rise of the coolant across the engine shall be no more than that recommended and submitted in accordance with paragraph SUBMITTALS.

2.5.1 Coolant Pumps

Coolant pumps shall be the centrifugal type. Each engine shall have an engine-driven primary pump. Secondary pumps shall be electric motor driven and have automatic controllers.

2.5.2 Heat Exchanger

2.5.2.1 Fin-Tube-Type Heat Exchanger (Radiator)

Heat exchanger may be factory coated with corrosive resistant film providing that corrosion measures are taken to restore the heat rejection capability of the radiator to the initial design requirement via oversizing, or other compensating methods. Internal surfaces shall be compatible with liquid fluid coolant used. Materials and coolant are subject to approval by the Contracting Officer. Heat exchangers shall be pressure type incorporating a pressure valve, vacuum valve and a cap. Caps shall be designed for pressure relief prior to removal. Each heat exchanger and the entire cooling system shall be capable of withstanding a minimum pressure of 7 psi. Each heat exchanger shall be protected with a strong grille or screen guard. Each heat exchanger shall have at least two tapped holes. One tapped hole in the heat exchanger shall be equipped with a drain cock, the rest shall be plugged.

2.5.3 Expansion Tank

The cooling system shall include an air expansion tank which will accommodate the expanded water of the system generated within the normal operating temperature range, limiting the pressure increase at all components in the system to the maximum allowable pressure at those components. The tank shall be suitable for an operating temperature of 250 degrees F and a working pressure of 125 psi. The tank shall be constructed of welded steel, tested and stamped in accordance with ASME BPV VIII Div 1 for the stated working pressure. A bladder type tank shall not be used. The tank shall be supported by steel legs or bases for vertical installation or steel saddles for horizontal installation.

2.5.4 Temperature Sensors

Each engine shall be equipped with coolant temperature sensors. Temperature sensors shall provide signals for pre-high and high indication and alarms.

2.6 SOUND LIMITATIONS

The noise generated by the diesel generator set operating at 100 percent load shall not exceed the following sound pressure level in any of the indicated frequencies when measured in a free field at a radial distance of 22.9 feet at 45 degrees apart in all directions.

Frequency Band (Hz)	Maximum Acceptable Pressure Level (Decibels)
31-8000	75 dba

2.7 AIR INTAKE EQUIPMENT

Filters and silencers shall be provided in locations that are convenient for servicing. The silencer shall be of the high-frequency filter type, located in the air intake system as recommended by the engine manufacturer. Silencer shall be capable of reducing the noise level at the air intake to a point below the maximum acceptable levels specified in paragraph SOUND LIMITATIONS. A combined filter-silencer unit meeting requirements for the separate filter and silencer items may be provided. Expansion elements in air-intake lines shall be rubber.

2.8 EXHAUST SYSTEM

The system shall be separate and complete for each engine. Piping shall be supported so as to minimize vibration. Where a V-type engine is provided, a V-type connector with necessary flexible sections and hardware shall connect the engine exhaust outlets.

2.8.1 Flexible Sections and Expansion Joints

A flexible section at each engine and an expansion joint at each muffler shall be provided. Flexible sections and expansion joints shall have flanged connections. Flexible sections shall be made of convoluted seamless tube without joints or packing. Expansion joints shall be the bellows type. Expansion and flexible elements shall be stainless steel suitable for diesel-engine exhaust gas at the maximum exhaust temperature that is specified by the engine manufacturer. Expansion and flexible elements shall be capable of absorbing vibration from the engine and compensation for thermal expansion and contraction.

2.8.2 Exhaust Muffler

A chamber type exhaust muffler shall be provided. The muffler shall be constructed of welded steel and designed for inside horizontal mounting. Eyebolts, lugs, flanges, or other items shall be provided as necessary for support in the location and position indicated. Pressure drop through the muffler shall not exceed the recommendations of the engine manufacturer. Outside mufflers shall be zinc coated or painted with high temperature 400 degrees F resisting paint. The muffler and exhaust piping together shall reduce the noise level to less than the maximum acceptable level listed for sound limitations in paragraph SOUND LIMITATIONS. The muffler shall have a drain valve, nipple, and cap at the low-point of the muffler.

2.8.3 Exhaust Piping

Horizontal sections of exhaust piping shall be sloped downward away from the engine to a condensate trap and drain valve. Changes in direction shall be long-radius. Exhaust piping, mufflers and silencers installed inside any building shall be insulated in accordance with paragraph THERMAL INSULATION and covered to protect personnel. Vertical exhaust piping shall be provided with a hinged, gravity operated, self-closing, rain cover.

2.9 EMISSIONS

The finished installation shall comply with Federal, state, and local regulations and restrictions regarding the limits of emissions, as listed below.

EPA Tier II.

2.10 STARTING SYSTEM

The starting system for standby engine generator sets used in emergency applications shall be in accordance with NFPA 99 and NFPA 110 and as follows.

2.10.1 Controls

An engine control switch shall be provided with functions including: run/start (manual), off/reset, and automatic mode. Start-stop logic shall be provided for adjustable cycle cranking and cool down operation. The logic shall be arranged for fully automatic starting in accordance with paragraph AUTOMATIC ENGINE-GENERATOR SET SYSTEM OPERATION. Electrical starting systems shall be provided with an adjustable cranking limit device to limit cranking periods from 1 second up to the maximum duration.

2.10.2 Capacity

The starting system shall be of sufficient capacity, at the maximum outdoor summer temperature specified to crank the engine without damage or overheating. The system shall be capable of providing a minimum of three cranking periods with 15-second intervals between cranks. Each cranking period shall have a maximum duration of 15 seconds.

2.10.3 Functional Requirements

Starting system shall be manufacturers recommended dc system utilizing a negative circuit ground. Starting motors shall be in accordance with SAE ARP 892.

2.10.4 Battery

A starting battery system shall be provided and shall include the battery, battery rack, intercell connectors, and spacers. The battery shall be in accordance with SAE J 537. Critical system components (rack, protection, etc.) shall be sized to withstand the seismic acceleration forces specified. The battery shall be lead-acid type, with sufficient capacity, at the minimum outdoor winter temperature specified to provide the specified cranking periods.

2.10.5 Battery Charger

A current-limiting battery charger, conforming to UL 1236, shall be provided and shall automatically recharge the batteries. The charger shall be capable of an equalize charging rate for recharging fully depleted batteries within 24 hours and a float charge rate for maintaining the batteries in prime starting condition. An ammeter shall be provided to indicate charging rate. A timer shall be provided for the equalize charging rate setting. A battery is considered to be fully depleted when the output voltage falls to a value which will not operate the engine

generator set and its components.

2.10.6 Starting Aids

The manufacturer shall provide one or more of the following methods to assist engine starting.

2.10.6.1 Jacket-Coolant Heaters

A thermostatically controlled electric heater shall be mounted in the engine coolant jacketing to automatically maintain the coolant within plus or minus 3 degrees of the control temperature. The heater shall operate independently of engine operation so that starting times are minimized. The control temperature shall be the temperature recommended by the engine manufacturer to meet the starting time specified.

2.11 GOVERNOR

Each engine shall be provided with a governor which maintains the frequency within a bandwidth of the rated frequency, over a steady-state load range of zero to 100% of rated output capacity. The governor shall be configured for safe manual adjustment of the speed/frequency during operation of the engine generator set, without special tools, from 90 to 110 % of the rated speed/frequency, over a steady state load range of zero to 100% of rated capacity. Isochronous governors shall maintain the midpoint of the frequency bandwidth at the same value for steady-state loads over the range of zero to 100% of rated output capacity.

2.12 GENERATOR

Each generator shall be of the synchronous type, one or two bearing, conforming to NEMA MG 1, equipped with winding terminal housings in accordance with NEMA MG 1, equipped with an amortisseur winding, and directly connected to the engine. Insulation shall be Class H. Generator design shall protect against mechanical, electrical and thermal damage due to vibration, 25 percent overspeeds, or voltages and temperatures at a rated output capacity of 100 percent. Generator ancillary equipment shall meet the short circuit requirements of NEMA MG 1. Frames shall be the drip-proof type.

2.12.1 Current Balance

At 100 percent rated load, and load impedance equal for each of the three phases, the permissible current difference between any two phases shall not exceed 2 percent of the largest current on either of the two phases.

2.12.2 Voltage Balance

At any balanced load between 75 and 100 percent of rated load, the difference in line-to-neutral voltage among the three phases shall not exceed 1 percent of the average line-to-neutral voltage. For a single-phase load condition, consisting of 25 percent load at unity power factor placed between any phase and neutral with no load on the other two phases, the maximum simultaneous difference in line-to-neutral voltage between the phases shall not exceed 3 percent of rated line to neutral voltage. The single-phase load requirement shall be valid utilizing normal exciter and regulator control. The interpretation of the 25 percent load for single phase load conditions means 25 percent of rated current at rated phase voltage and unity power factor.

2.12.3 Waveform

The deviation factor of the line-to-line voltage at zero load and at balanced full rated load at 0.8 power factor shall not exceed 10%. The RMS of all harmonics shall be less than 5.0% and that of any one harmonic less than 3.0% at full rated load. Each engine-generator shall be designed and configured to meet the total harmonic distortion limits of IEEE Std 519.

2.13 EXCITER

The generator exciter shall be of the brushless type. Semiconductor rectifiers shall have a minimum safety factor of 300% for peak inverse voltage and forward current ratings for all operating conditions, including 110% generator output at 104 degrees F ambient. The exciter and regulator in combination shall maintain generator-output voltage within the limits specified.

2.14 VOLTAGE REGULATOR

Each generator shall be provided with a solid-state voltage regulator, separate from the exciter. The regulator shall maintain the voltage within a bandwidth of the rated voltage, over a steady-state load range of zero to 100% of rated output capacity. Regulator shall be configured for safe manual adjustment of the engine generator voltage output without special tools, during operation from 90 to 110% of the rated voltage over the steady state load range of zero to 100% of rated output capacity. Regulation drift shall not exceed plus or minus 0.5% for an ambient temperature change of 36 degrees F.

2.14.1 Steady State Performance (Regulation or Voltage Droop).

The voltage regulator shall have a maximum droop of 1% of rated voltage over a load range from 0 to 100% of rated output capacity and automatically maintain the generator output voltage within the specified operational bandwidth.

2.15 GENERATOR PROTECTION

Short circuit and overload protection for the generator shall be provided. The generator circuit breaker (IEEE Device 52) ratings shall be consistent with the generator rated voltage and frequency, with continuous, short circuit and interrupting current ratings to match the generator capacity. The manufacturer shall determine the short circuit current interrupting rating of the breaker. The breaker shall be engine generator base mounted by the engine-generator set manufacturer. Molded case breakers shall be provided with shunt trip. Surge protection shall be provided for each phase of the generator, to be mounted at the generator terminals.

2.16 SAFETY SYSTEM

Devices, wiring, remote panels, local panels, etc., shall be provided and installed as a complete system to automatically activate the appropriate signals and initiate the appropriate actions. The safety system shall be provided with a self-test method to verify its operability. Alarm signals shall have manual acknowledgement and reset devices. The alarm signal systems shall reactivate for new signals after acknowledgment is given to any signal. The systems shall be configured so that loss of any monitoring device shall be dealt with as an alarm on that system element.

2.16.1 Audible Signal

The audible alarm signal shall sound at a frequency of 70 Hz at a volume of 10 feet. The sound shall be continuously activated upon alarm and silenced upon acknowledgment. Signal devices shall be located as shown.

2.16.2 Visual Signal Signal

The visual alarm signal shall be a panel light. The light shall be normally off, activated to be blinking upon alarm. The light shall change to continuously light upon acknowledgement. If automatic shutdown occurs, the display shall maintain activated status to indicate the cause of failure and shall not be reset until cause of alarm has been cleared and/or restored to normal condition. Shutdown alarms shall be red; all other alarms shall be amber.

2.16.3 Alarms and Action Logic

2.16.3.1 Shutdown

Simultaneous activation of the audible signal, activation of the visual signal, stopping the engine, and opening the generator main circuit breakers shall be accomplished.

2.16.3.2 Problem

Activation of the visual signal shall be accomplished.

2.16.4 Local Alarm Panel

A local alarm panel shall be provided with the following shutdown and alarm functions in accordance with NFPA 110 level 2 and including the listed Corps of Engineers requirements, mounted either on or adjacent to the engine generator set.

Device/ Condition/	What/Where/Size	NFPA 110	Corps of Level 2	Engrs Function Required
Shutdowns W/Alarms				
High engine temperature	Automatic/ jacket water/ cylinder	SD/CP VA	SD VA	
Low lube-oil pressure	Automatic/ pressure/ level	SD/CP VA	SD VA	
Overspeed shutdown $ alarm	(110% (± 2%) of rated speed	SD/CP VA	SD VA	
Overcrank failure to start	Automatic/ Failure to to start	SD/CP VA		

Device/ Condition/	What/Where/Size	NFPA 110	Corps of Level 2	Engrs Function Required
Red emergency stop switch	Manual Switch		SD/CP VA	SD VA
Failure to crank	Corps of Engrs. Required			
Alarms				
Low lube-oil pressure	Pressure/ level	CP VAO	CP VA	
Low coolant	Jacket water	CP VA		
Pre-high temperature	Jacket water/ cylinder	CP VAO	CP VA	
Pre-low lube-oil pressure				CP VA
High battery voltage			CP VAO	
Low battery voltage			CP VAO	
Battery charger AC failure	AC supply not available		CP VAO	
Control switch not in AUTO			CP VAO	

SD - Shut Down
CP - On Control Panel
VA - Visual Alarm
AA - Audible Alarm
O - Optional

2.16.5 Time-Delay on Alarms

For startup of the engine-generator set, time-delay devices shall be installed bypassing the low lubricating oil pressure alarm during cranking, and the coolant-fluid outlet temperature alarm. The lube-oil time-delay device shall return its alarm to normal status after the engine starts. The coolant time-delay device shall return its alarm to normal status 5 minutes after the engine starts.

2.16.6 Remote Alarm Panel

A remote alarm panel shall be provided in accordance with NFPA 99 NFPA 110 and as follows:

Device/Condition/ Function	What/Where/Size	NFPA 110 Level 2	
Remote annunciator panel	Battery powered	Alarms	
Loads on genset			
Battery charger malfunction			
Low lube-oil	Pressure/level	AAO	
Low Temperature	Jacket water	AAO	
High Temperature	Jacket water/ cylinder	AAO	
Low fuel level	Main tank, 3 hr remaining	AAO	
Overcrank	Failure to start	AAO	
Overspeed		AAO	
Pre-high temperature	Jacket water/ cylinder		
Control switch not in AUTO			
Common alarm contacts for local & remote common alarm			X
Audible alarm silencing switch			O
Common fault alarm			

X - Required
SD - Shut Down
CP - On Control Panel
VA - Visual Alarm
AA - Audible Alarm
O - Optional

2.17 ENGINE GENERATOR SET CONTROLS AND INSTRUMENTATION

Devices, wiring, remote panels, local panels, etc., shall be provided and installed as a complete system to automatically activate the appropriate signals and initiate the appropriate actions.

2.17.1 Controls

A local control panel shall be provided with controls as indicated in accordance with NFPA 110 level 2 and as follows mounted on the engine generator set.

Device/Condition/ Function	Corps Requirement	NFPA 110 Level 2	MFG Offering
Controls			
Switch: run/start - off/set - auto	CP		CP/STD
Emergency stop switch & alarm	CP		CP/STD
Lamp test/indicator test	CP	CP VA	CP/STD
Common alarm contacts/ fault relay		X	CP/O
Panel lighting	CP		CP/STD
Audible alarm & silencing/reset switch	CP		
Voltage adjust for voltage Regulator	CP		CP/STD

2.17.2 Engine Generator Set Metering and Status Indication

A local panel shall be provided with devices per NFPA 110 level 2 and as follows mounted on the engine generator set.

Device/Condition/ Function	Corps Requirement	NFPA 110 Level 2	
Genset Status & Metering			
Genset supplying load		CP VAO	CP VAO
System ready			
Engine oil pressure	CP		
Engine coolant temperature	CP		
Engine RPM (Tachometer)	CP		
Engine run hours	CP		
AC volts (generator), 3-phase	CP		
AC amps (generator), 3-phase	CP		
Generator frequency	CP		
Phase selector switches (amps & volts)	CP		
Watts/kW	CP		
CP/VA-O			
Voltage Regulator			

Device/Condition/ Function	Corps Requirement	NFPA 110 Level 2
Adjustment	CP	

CP - On Control Panel
VA - Visual Alarm
AA - Audible Alarm
O - Optional
STD - Manufacturers Standard Offering

2.18 PANELS

Each panel shall be of the type necessary to provide specified functions. Panels shall be mounted on the engine generator set base by vibration/shock absorbing type mountings. Instruments shall be mounted flush or semiflush. Convenient access to the back of instruments shall be provided to facilitate maintenance. Instruments shall be calibrated using recognized industry calibration standards. Each panel shall be provided with a panel identification plate which clearly identifies the panel function as indicated. Each instrument and device on the panel shall be provided with a plate which clearly identifies the device and its function as indicated. Panels except the remote alarm panel can be combined into a single panel.

2.18.1 Enclosures

Enclosures shall be designed for the application and environment, conforming to NEMA ICS 6, and provided with locking mechanisms which are keyed alike.

2.18.2 Electronic

Electronic indicating instruments shall be true RMS indicating, 100 percent solid state, microprocessor controlled to provide all specified functions. Control, logic, and function devices shall be compatible as a system, sealed, dust and water tight, and shall utilize modular components with metal housings and digital instrumentation. An interface module shall be provided to decode serial link data from the electronic panel and translate alarm, fault and status conditions to set of relay contacts. Instrument accuracy shall be not less than 1 percent for unit mounted devices. Data display shall utilize LED or back lit LCD. Additionally, the display shall provide indication of cycle programming and diagnostic codes for troubleshooting. Numeral height shall be 1/2 inch.

2.18.3 Parameter Display

Indication or readouts of the lubricating-oil pressure, ac voltmeter, ac ammeter, frequency meter, and coolant temperature.

2.19 SURGE PROTECTION

Electrical and electronic components shall be protected from, or designed to withstand the effects of surges from switching and lightning.

2.20 AUTOMATIC ENGINE-GENERATOR-SET SYSTEM OPERATION

Fully automatic operation shall be provided for the following operations: engine-generator set starting and source transfer upon loss of normal source; retransfer upon restoration of the normal source; sequential starting; and stopping of each engine-generator set after cool down.

Devices shall automatically reset after termination of their function.

2.20.1 Automatic Transfer Switch

Automatic transfer switches shall be in accordance with Section 16410 AUTOMATIC TRANSFER AND BY-PASS/ISOLATION SWITCHES.

2.20.2 Monitoring and Transfer

Devices shall be provided to monitor voltage and frequency for the normal power source and each engine generator set, and control transfer from the normal source and retransfer upon restoration of the normal source. Functions, actuation, and time delays shall be as described in Section 16410 AUTOMATIC TRANSFER AND BY-PASS/ISOLATION SWITCHES.

2.21 MANUAL ENGINE-GENERATOR SET SYSTEM OPERATION

Complete facilities shall be provided for manual starting and testing of each set without load, loading and unloading of each set.

2.22 BASE

The base shall be constructed of steel. The base shall be designed to rigidly support the engine-generator set, ensure permanent alignment of all rotating parts, be arranged to provide easy access to allow changing of lube-oil, and ensure that alignment will be maintained during shipping and normal operation. The base shall permit skidding in any direction during installation and shall be provided with suitable holes for foundation bolts. The base shall also withstand and mitigate the effects of synchronous vibration of the engine and generator, and shall be provided with suitable holes for anchor bolts.

2.23 THERMAL INSULATION

Thermal insulation shall be as specified in Section 15080 THERMAL INSULATION FOR MECHANICAL SYSTEMS.

2.24 PAINTING AND FINISHING

The engine-generator set shall be cleaned, primed and painted in accordance with the Contracting Officer's direction.

2.25 FACTORY INSPECTION AND TESTS

Factory inspection and tests shall be performed on each engine-generator set proposed to meet this specification section. Inspections shall be completed and necessary repairs made prior to testing. Inspectors shall look for leaks, looseness, defects in components, and proper assembly. Factory tests shall be NEMA MG 1 routine tests and the manufacturers routine tests.

PART 3 EXECUTION

3.1 GENERAL INSTALLATION

Installation shall provide clear space for operation and maintenance in accordance with NFPA 70 and IEEE C2. Installation of pipe, duct, conduit, and ancillary equipment shall be configured to facilitate easy removal and replacement of major components and parts of the engine-generator set.

3.2 PIPING INSTALLATION

3.2.1 General

Piping shall be welded. Connections at valves shall be flanged. Connections at equipment shall be flanged except that connections to the diesel engine may be threaded if the diesel-engine manufacturer's standard connection is threaded. Except as otherwise specified, flanged fittings shall be utilized to allow for complete dismantling and removal of each piping system from the facility without disconnecting or removing any portion of any other system's equipment or piping. Connections to all equipment shall be made with flexible connectors. Pipes extending through the roof shall be properly flashed. Piping shall be installed clear of windows, doors, and openings to permit thermal expansion and contraction without damage to joints or hangers, and with a 1/2 inch drain valve at each low point.

3.2.2 Supports

Hangers, inserts, and supports shall be of sufficient size to accommodate any insulation and shall conform to MSS SP-58 and MSS SP-69. Supports shall be spaced not more than 7 feet on center for pipes 2 inches in diameter or less, not more than 12 feet on center for pipes larger than 2 inches but no larger than 4 inches, and not more than 17 feet on center for pipes larger than 4 inches in diameter. Supports shall be provided at pipe bends or change of direction.

3.2.2.1 Ceiling and Roof

Exhaust piping shall be supported with appropriately sized type 41 single pipe roll and threaded rods; all other piping shall be supported with appropriately sized type 1 clevis and threaded rods.

3.2.2.2 Wall

Wall supports for pipe shall be made by suspending the pipe from appropriately sized type 33 brackets with the appropriate ceiling and roof pipe supports.

3.2.3 Flanged Joints

Flanges shall be 125 pound type, drilled, and of the proper size and configuration to match equipment and diesel-engine connections. Gaskets shall be factory cut in one piece 1/16 inch thick.

3.2.4 Cleaning

After fabrication and before assembly, piping interiors shall be manually wiped clean of all debris.

3.2.5 Pipe Sleeves

Pipes passing through construction such as ceilings, floors, or walls shall be fitted with sleeves. Each sleeve shall extend through and be securely fastened in its respective structure and shall be cut flush with each surface. The structure shall be built tightly to the sleeve. The inside diameter of each sleeve shall be 1/2 inch, and where pipes pass through combustible materials, 1 inch larger than the outside diameter of the

passing pipe or pipe covering.

3.3 ELECTRICAL INSTALLATION

Electrical installation shall comply with NFPA 70, IEEE C2, and Section 16415 ELECTRICAL WORK, INTERIOR.

3.3.1 Vibration Isolation

Flexible fittings shall be provided for all conduit, cable trays, and raceways attached to engine-generator sets. Metallic conductor cables installed on the engine generator set and from the engine generator set to equipment not mounted on the engine generator set shall be flexible stranded conductor. Terminations of conductors on the engine generator set shall be crimp-type terminals or lugs.

3.4 FIELD PAINTING

Field painting shall be as specified in Section 09900 PAINTING, GENERAL.

3.5 ONSITE INSPECTION AND TESTS

3.5.1 Test Conditions

3.5.1.1 Data

Measurements shall be made and recorded of parameters necessary to verify that each set meets specified parameters. If the results of any test step are not satisfactory, adjustments or replacements shall be made and the step repeated until satisfactory results are obtained. Unless otherwise indicated, data shall be taken during engine-generator set operation and recorded in 15 minute intervals and shall include: readings of engine-generator set meters and gauges for electrical and power parameters; oil pressure; ambient temperature; and engine temperatures available from meters and gauges supplied as permanent equipment on the engine-generator set. In the following tests where measurements are to be recorded after stabilization of an engine-generator set parameter (voltage, frequency, current, temperature, etc.), stabilization is considered to have occurred when measurements are maintained within the specified bandwidths or tolerances, for a minimum of four consecutive readings.Electrical measurements shall be performed in accordance with IEEE Std 120. Definitions and terms are in accordance with IEEE Std 100. Temperature limits in the rating of electrical equipment and for the evaluation of electrical insulation shall be in accordance with IEEE Std 1.

3.5.1.2 Power Factor

Engine-generator set operating tests shall be made utilizing a load with the power factor specified in the engine generator set parameter schedule a 0.8 power factor.

3.5.1.3 Contractor Supplied Items

The Contractor shall provide all equipment and supplies required for inspections and tests including fuel, test instruments, and loadbanks at the specified power factors.

3.5.1.4 Instruments

Readings of panel gauges, meters, displays, and instruments, provided under this specification shall be verified during test runs by test instruments of precision and accuracy greater than the tested items. Test instrument accuracy shall be at least as follows: current, 1.5%; voltage, 1.5%; real power, 1.5%; reactive power, 1.5%; power factor, 3%; frequency, 0.5%. Test instruments shall be calibrated by a recognized standards laboratory within 65 days prior to testing.

3.5.1.5 Sequence

The sequence of testing shall be as specified in the approved testing plan unless variance in authorized by the Contracting Officer. Field testing shall be performed in the presence of the Contracting Officer. Tests may be scheduled and sequenced in order to optimize run-time periods; however the following general order of testing shall be followed: Construction Tests; Inspections; Safety run Tests; and Performance Tests and Final Inspection.

3.5.2 Construction Tests

Individual component and equipment functional tests for fuel piping, coolant piping, and lubricating-oil piping, electrical circuit continuity, insulation resistance, circuit protective devices, and equipment not provided by the engine-generator set manufacturer shall be performed prior to connection to the engine-generator set.

3.5.2.1 Piping Test

a. Lube-oil and fuel-oil piping shall be flushed with the same type of fluid intended to flow through the piping, until the outflowing fluid has no obvious sediment or emulsion.

b. Fuel piping which is external to the engine-generator set shall be tested in accordance with NFPA 30. All remaining piping which is external to the engine generator set shall be pressure tested with air pressure at 150% of the maximum anticipated working pressure, but in no case less than 150 psig, for a period of 2 hours to prove the piping has no leaks. If piping is to be insulated, the test shall be performed before the insulation is applied.

3.5.2.2 Electrical Equipment Tests

a. Low-voltage cable insulation integrity tests shall be performed for cables connecting the generator breaker to the automatic transfer switch. Low-voltage cable, complete with splices, shall be tested for insulation resistance after the cables are installed, in their final configuration, ready for connection to the equipment, and prior to energization. The test voltage shall be 500 volts dc, applied for one minute between each conductor and ground and between all possible combinations conductors in the same trench, duct, or cable, with all other conductors in the same trench, duct, or conduit. The minimum value of insulation shall be:

R in megohms = (rated voltage in kV + 1) x 304,800/(length of cable in meters).

(R in megohms = (rated voltage in kV + 1) x 1000/(length of cable in feet)

Each cable failing this test shall be repaired or replaced. The repaired cable shall be retested until failures have been eliminated.

b. Ground-Resistance Tests. The resistance of each grounding electrode shall be measured using the fall-of-potential method defined in IEEE Std 81. Ground resistance measurements shall be made before the electrical distribution system is energized and shall be made in normally dry conditions not less than 48 hours after the last rainfall. Resistance measurements of separate grounding electrode systems shall be made before the systems are bonded together below grade. The combined resistance of separate systems may be used to meet the required resistance, but the specified number of electrodes must still be provided.

   1) Single rod electrode - 25 ohms.

c. Circuit breakers and switchgear shall be examined and tested in accordance with manufacturer's published instructions for functional testing.

3.5.3 Inspections

The following inspections shall be performed jointly by the Contracting Officer and the Contractor, after complete installation of each engine-generator set and its associated equipment, and prior to startup of the engine-generator set. Checks applicable to the installation shall be performed. The results of those which are physical inspections (I) shall be documented by the Contractor and submitted in accordance with paragraph SUBMITTALS. The Contractor shall present manufacturer's data for the inspections designated (D) at the time of inspection. Inspections shall verify that equipment type, features, accessibility, installation and condition are in accordance with the contract specification. Manufacturer's statements shall certify provision of features which cannot be verified visually.

1. Drive belts. (I)
2. Governor type and features. (I)
3. Engine timing mark. (I)
4. Starting motor. (I)
5. Starting aids. (I)
6. Coolant type and concentration. (D)
7. Radiator drains. (I)
8. Block coolant drains. (I)
9. Coolant fill level. (I)
10. Coolant line connections. (I)
11. Coolant hoses. (I)
12. Combustion air filter. (I)
13. Intake air silencer. (I)
14. Lube oil type. (D)
15. Lube oil drain. (I)
16. Lube-oil filter. (I)
17. Lube-oil-fill level. (I)
18. Lube-oil line connections. (I)
19. Lube-oil lines. (I)
20. Fuel type. (D)
21. Fuel-level. (I)
22. Fuel-line connections. (I)

23. Fuel lines. (I)
24. Fuel filter. (I)
25. Access for maintenance. (I)
26. Voltage regulator. (I)
27. Battery-charger connections. (I)
28. Wiring & terminations. (I)
29. Instrumentation. (I)
30. Hazards to personnel. (I)
31. Base. (I)
32. Nameplates. (I)
33. Paint. (I)
34. Exhaust system. (I)
35. Access provided to controls. (I)
36. Enclosure. (I)
37. Engine & generator mounting bolts (proper application). (I)

3.5.4 Safety Run Tests

a. Perform and record engine manufacturer's recommended prestarting checks and inspections.

b. Start the engine, record the starting time, make and record engine manufacturer's after-starting checks and inspections during a reasonable warm-up period.

c. Activate the manual emergency stop switch and verify that the engine stops.

d. Remove the high and pre-high coolant temperature sensing elements from the engine and temporarily seal their normal location on the engine and temporarily install temperature gauges in their normal locations on the engine (required for safety, not for recorded data). Where necessary provide temporary wiring harness to connect the sensing elements to their permanent electrical leads.

e. Start the engine, record the starting time, make and record engine manufacturer's after-starting checks and inspections and operate the engine generator-set at no load until the output voltage and frequency stabilize.

f. Immerse the elements in a vessel containing controlled-temperature hot oil and record the temperature at which the pre-high alarm activates and the temperature at which the engine shuts down. Remove the temporary temperature gauges and reinstall the temperature sensors on the engine.

g. Start the engine, record the starting time, make and record engine manufacturer's after-starting checks and inspections during a reasonable warm-up period.

h. Operate the engine generator-set for at least 30 minutes at 100 percent of service load.

i. Verify proper operation of the governor and voltage regulator.

j. Verify proper operation and setpoints of gauges and instruments.

k. Verify proper operation of ancillary equipment.

l. Manually adjust the governor to increase engine speed past the overspeed limit. Record the RPM at which the engine shuts down.

m. Start the engine, record the starting time, make and record engine manufacturer's after-starting checks and inspections and operate the engine generator-set for at least 15 minutes at 75 percent of rated load.

n. Shut down the engine. Remove the time-delay low lube oil pressure alarm bypass and try to start the engine. Record the results.

o. Attach a manifold to the engine oil system (at the oil sensor pressure port) that contains a shutoff valve in series with a connection for the engine's oil pressure sensor followed by an oil pressure gauge ending with a bleed valve. The engine's oil pressure sensor shall be moved from the engine to the manifold and its normal location on the engine temporarily sealed. The manifold shutoff valve shall be open and bleed valve closed.

p. Start the engine, record the starting time, make and record all engine manufacturer's after-starting checks and inspections and operate the engine generator-set for at least 15 minutes at 75 percent of service load.

q. Close the manifold shutoff valve. Slowly allow the pressure in the manifold to bleed off through the bleed valve while watching the pressure gauge. Record the pressure at which the engine shuts down. Catch oil spillage from the bleed valve in a container. Add the oil from the container back to the engine, remove the manifold, and reinstall the engine's oil pressure sensor on the engine.

r. Start the engine, record the starting time, make and record all engine manufacturer's after-starting checks and inspections and operate the engine generator-set for at least 15 minutes at 100% of service load. Record the maximum sound level in each frequency band at a distance of 23 feet from the end of the exhaust and air intake piping directly along the path of intake and discharge horizontal piping; or at a radius of 23 feet from the engine at 45 degrees apart in all directions for vertical piping. The measurements should comply with the paragraph SOUND LIMITATIONS.

3.5.5 Performance Tests

3.5.5.1 Continuous Engine Load Run Test

The engine-generator set and ancillary systems shall be tested at service load to: demonstrate durability; verify that heat of extended operation does not adversely affect or cause failure in any part of the system; and check all parts of the system. If the engine load run test is interrupted for any reason, the entire test shall be repeated. The engine load run test shall be accomplished principally during daylight hours. Measurements are to be recorded after stabilization of an engine-generator set parameter (voltage, frequency, current, temperature, etc.). Stabilization is considered to have occurred when measurements are maintained within the specified bandwidths or tolerances, for a minimum of four consecutive readings. Data taken at 15 minutes intervals shall include the following:

a. Electrical: Output amperes, voltage, real and reactive power,

power factor, frequency.

b. Pressure: Lube-oil.

c. Temperature: Coolant.

d. Ambient.

(1) Perform and record engine manufacturer's recommended prestarting checks and inspections. Include as a minimum checking of coolant fluid, fuel, and lube-oil levels.

(2) Start the engine; make and record engine manufacturer's after-starting checks and inspections during a reasonable warm-up period.

(3) Operate the engine generator-set for at least 2 hours at 75 percent of service load.

(4) Increase load to 100%of service load and operate the engine generator-set for at least 2 hours.

(5) Remove load from the engine-generator set.

3.5.5.2 Load Acceptance Test

Engine manufacturer's recommended prestarting checks and inspections shall be performed and recorded. The engine shall be started, and engine manufacturer's after-starting checks and inspections made and recorded during a reasonable warm-up period. For the following steps, the output line-line and line-neutral voltages and frequency shall be recorded after performing each step instruction (after stabilization of voltage and frequency). Stabilization is considered to have occurred when measurements are maintained within the specified bandwidths or tolerances, for a minimum of four consecutive readings.

a. Apply load in steps no larger than the Maximum Step Load Increase to load the engine-generator set to 100 of Service Load.

b. Verify that the engine-generator set responds to the load addition and that the output voltage returns to and stabilizes within the rated bandwidths.

3.5.6 Automatic Operation Tests for Stand-Alone Operation

The automatic loading system shall be tested to demonstrate automatic starting, and loading and unloading of each engine-generator set. The loads for this test shall utilize the actual loads to be served, and the loading sequence shall be the indicated sequence. Perform this test for a minimum of two successive, successful tests. Data taken shall include the following:

a. Ambient temperature (at 15 minute intervals).

b. Generator output current (before and after load changes).

c Generator output voltage (before and after load changes).

d. Generator output frequency (before and after load changes.)

1. Initiate loss of the primary power source and verify automatic sequence of operation.

2. Restore the primary power source and verify sequence of operation.

3. Verify resetting of controls to normal.

3.6 FINAL INSPECTION AND TESTING

a. Start the engine, record the starting time, make and record all engine manufacturer's after-starting checks and inspections during a reasonable warm-up period.

b. Increase the load in steps no greater than the maximum step load increase to 100% of service load, and operate the engine-generator set for at least 30 minutes.

c. Remove load and shut down the engine-generator set after the recommended cool down period. Perform the pre-test inspections and take necessary corrective actions.

d. Remove the lube oil filter and have the oil and filter examined by the engine manufacturer for excessive metal, abrasive foreign particles, etc. Any corrective action shall be verified for effectiveness by running the engine for 4 hours at service load, then re-examining the oil and filter.

e. Remove the fuel filter and examine the filter for trash, abrasive foreign particles, etc.

f. Visually inspect and check engine and generator mounting bolts for tightness and visible damage.

g. Replace air, oil, and fuel filters with new filters.

3.7 MANUFACTURER'S FIELD SERVICE

3.7.1 Onsite Training

The Contractor shall conduct training course for operating staff as designated by the Contracting Officer. The training period shall consist of a total 4 hours of normal working time and shall start after the system is functionally completed but prior to final acceptance. The course instructions shall cover pertinent points involved in operating, starting, stopping, servicing the equipment, as well as all major elements of the operation and maintenance manuals. Additionally, the course instructions shall demonstrate all routine maintenance operations such as oil change, oil filter change, and air filter change.

3.7.2 Manufacturer's Representative

The engine generator-set manufacturer shall furnish a qualified representative to supervise the installation of the engine generator-set, assist in the performance of the onsite tests, and instruct personnel as to the operational and maintenance features of the equipment.

3.8 INSTRUCTIONS

A set of instructions shall include the condensed operating instructions describing manufacturer's pre-start checklist and precautions; start procedures for test-mode, manual-start mode, and automatic-start mode (as applicable); running checks, procedures, and precautions; and shutdown procedures, checks, and precautions. Instructions shall include procedures for interrelated equipment (such as automatic transfer switches).

3.9 ACCEPTANCE

Final acceptance of the engine-generator set will not be given until the Contractor has successfully completed all tests and after all defects in installation material or operation have been corrected.

-- End of Section --

SECTION 16272N

THREE-PHASE PAD-MOUNTED TRANSFORMERS
01/01

PART 1 GENERAL

1.1 REFERENCES

The publications listed below form a part of this specification to the extent referenced. The publications are referred to in the text by the basic designation only.

AMERICAN SOCIETY FOR TESTING AND MATERIALS (ASTM)

ASTM A167	(1999) Stainless and Heat-Resisting Chromium-Nickel Steel Plate, Sheet, and Strip
ASTM D117	(1996) Electrical Insulating Oils of Petroleum Origin
ASTM D3487	(1988; R 1993) Mineral Insulating Oil Used in Electrical Apparatus

INSTITUTE OF ELECTRICAL AND ELECTRONICS ENGINEERS (IEEE)

IEEE C2	(1997) National Electrical Safety Code (ANSI/IEEE)
IEEE C12.7	(1993) Watthour Meter Sockets (ANSI/IEEE)
IEEE C12.15	(1990) Electricity Metering Solid-State Demand Registers for Electromechanical Watthour Meters
IEEE C12.16	(1991) Electricity Metering Solid-State Electricity Meters
IEEE C57.12.00	(2000) Liquid-Immersed Distribution, Power, and Regulating Transformers (ANSI/IEEE)
IEEE C57.12.26	(1992) Pad-Mounted, Compartmental-Type, Self-Cooled, Three-Phase Distribution Transformers for Use with Separable Insulated High-Voltage Connectors, (34 500 Grd Y/19 920 V and Below; 2500 kVA and Smaller)
IEEE C57.12.80	(1978; R 1992) Terminology for Power and Distribution Transformers (ANSI/IEEE)
IEEE C57.12.90	(1999) Test Code for Liquid-Immersed Distribution, Power, and Regulating Transformers (ANSI/IEEE)
IEEE C57.13	(1993) Instrument Transformers (ANSI/IEEE)

IEEE C57.98	(1993; Correction 1998) Guide for Transformer Impulse Tests (ANSI/IEEE)
IEEE C62.11	(1999) Metal-Oxide Surge Arresters for AC Power Circuits (> 1 kV) (ANSI/IEEE)

NATIONAL ELECTRICAL MANUFACTURERS ASSOCIATION (NEMA)

NEMA C12.1	(1995) Code for Electricity Metering
NEMA C37.47	(1981; R 1992) Distribution Fuse Disconnecting Switches, Fuse Supports, and Current-Limiting Fuses
NEMA C57.12.22	(1993) Transformers - Pad-Mounted, Compartmental-Type, Self-Cooled, Three-Phase Distribution Transformers with High-Voltage Bushings, 2500 kVA and Smaller: High Voltage, 34 500 GrdY /19 920 Volts and Below; Low Voltage, 480 Volts and Below
NEMA C57.12.28	(1999) Pad-Mounted Equipment - Enclosure Integrity (Revision of ANSI C57.12.28-88)
NEMA LI 1	(1998) Industrial Laminating Thermosetting Products

INTERNATIONAL ELECTRICAL TESTING ASSOCIATION (NETA)

NETA ATS	(1999) Electrical Power Distribution Equipment and Systems

NATIONAL FIRE PROTECTION ASSOCIATION (NFPA)

NFPA 70	(1999) National Electrical Code

UNDERWRITERS LABORATORIES (UL)

UL 467	(1993; R 1999, Bul. 2000) Grounding and Bonding Equipment

1.2 RELATED REQUIREMENTS

Section 16050N, "Basic Electrical Materials and Methods," and Section 16081N, "Apparatus Inspection and Testing," apply to this section, with the additions and modifications specified herein.

1.3 SUBMITTALS

Submit the following in accordance with Section 01330, "Submittal Procedures." As an exception to this paragraph, transformers manufactured by ABB in Jefferson City, MO; by Cooper Power Systems in Waukesha, WI; by GE in Shreveport, LA; or by Howard Industries in Laurel, MS need not meet the submittal requirements of this contract. Instead, the following shall be submitted:

a. A certification, from the manufacturer, that the technical

requirements of this specification shall be met.

b. An outline drawing of the transformer with devices identified (paragraph entitled "Pad-Mounted Transformer Drawings", item a).

c. ANSI nameplate data of the transformer (paragraph entitled "Pad-Mounted Transformer Drawings", item b).

d. Manufacturer's published time-current curves (on full size logarithmic paper) of the transformer high side fuses (paragraph entitled "Pad-Mounted Transformer Drawings", item e).

e. Routine and other tests (paragraph entitled "Routine and Other Tests"), shall be conducted by the manufacturer and may be witnessed by the government (paragraph entitled "Source Quality Control"). Provide transformer test schedule required by submittal item "SD-11 Closeout Submittals". Provide certified copies of the tests.

f. Provide acceptance test reports required by submittal item "SD-06 Test Reports".

g. Provide operation and maintenance manuals required by submittal item "SD-10 Operation and Maintenance Data".

SD-02 Shop Drawings

Pad-mounted transformer drawings; G

SD-03 Product Data

Pad-mounted transformers; G

Submittal shall include manufacturer's information for each component, device, and accessory provided with the transformer.

SD-06 Test Reports

acceptance checks and tests; G

Submit report of test results as specified by paragraph entitled "Field Quality Control"

SD-07 Certificates

Transformer losses; G

SD-09 Manufacturer's Field Reports

Pad-mounted transformer design tests; G

Pad-mounted transformer routine and other tests; G

SD-10 Operation and Maintenance Data

Transformer(s), Data Package 5; G

Submit operation and maintenance data in accordance with Section 01781N, "Operation and Maintenance Data" and as specified herein.

SD-11 Closeout Submittals

Transformer test schedule; G

1.4 QUALITY ASSURANCE

1.4.1 Pad-Mounted Transformer Drawings

Drawings shall indicate, but not be limited to the following:

a. An outline drawing, with front, top, and side views.

b. ANSI nameplate data.

c. Elementary diagrams and wiring diagrams with terminals identified of watthour meter and current transformers.

d. One-line diagram, including switch, current transformers, meters, and fuses.

e. Manufacturer's published time-current curves (on full size logarithmic paper) of the transformer high side fuses.

1.4.2 Transformer Losses

Submit certification from the manufacturer indicating conformance with the paragraph entitled "Specified Transformer Losses."

1.5 MAINTENANCE

1.5.1 Additions to Operation and Maintenance Data

In addition to requirements of Data Package 5, include the following on the actual transformer(s) provided:

a. An instruction manual with pertinent items and information highlighted

b. An outline drawing, front, top, and side views

c. Prices for spare parts and supply list

d. Routine and field acceptance test reports

e. Fuse curves for primary fuses

f. Information on watthour demand meter, CT's, and fuse block

g. Actual nameplate diagram

h. Date of purchase

PART 2 PRODUCTS

2.1 PRODUCT COORDINATION

Products and materials not considered to be pad-mounted transformers and related accessories are specified in Section 16302N, "Underground

Transmission and Distribution", and Section 16415A, "Electrical Work, Interior".

2.2 THREE-PHASE PAD-MOUNTED TRANSFORMERS

IEEE C57.12.26, NEMA C57.12.22, NEMA C57.12.28 and as specified herein.

2.2.1 Compartments

The high- and low-voltage compartments shall be separated by steel isolating barriers extending the full height and depth of the compartments. Compartment doors: hinged lift-off type with stop in open position and three-point latching.

2.2.1.1 High Voltage, Live-Front

High-voltage compartment shall contain the incoming line, transformer high-voltage bushings, load-break switch handle, access to oil-immersed fuses, surge arresters, tap changer handle, insulated phase barriers, and ground pad.

a. Cable terminators: Provide as specified in Section 16302N, "Underground Transmission and Distribution".

b. Load-break switch

   Radial-feed oil-immersed type rated at 22 kV, 125 kV BIL, with a continuous current rating and load-break rating of 300 amperes, and a make-and-latch rating of 10,000 rms amperes symmetrical. Locate the switch handle in the high-voltage compartment.

c. Provide bayonet oil-immersed, expulsion fuses in series with oil-immersed, partial-range, current-limiting fuses. Bayonet fuse links shall sense both high currents and high oil temperature in order to provide thermal protection to the transformer. Coordinate transformer protection with expulsion fuse clearing low-current faults and current-limiting fuse clearing high-current faults beyond the interrupting rating of the expulsion fuse. In order to eliminate or minimize oil spills, the bayonet fuse assembly shall include an oil retention valve inside the housing which closes when the fuse holder is removed and an external drip shield. Warning shall be conspicuously displayed within the high-voltage compartment cautioning against removing or inserting fuses unless the load-break switch is in the open position and the tank pressure has been released.

   Bayonet fuse assembly: 125 kV BIL.

   Oil-immersed current-limiting fuses: NEMA C37.47; 50,000 rms amperes symmetrical interrupting rating at the system voltage specified.

d. Surge arresters: IEEE C62.11, rated 27 kV. Provide three arresters for radial feed circuits.

e. Insulated phase barriers: NEMA LI 1, Type GPO-3, 0.25 inch minimum thickness. Provide vertical barriers between the high-voltage bushings and a single horizontal barrier above the high-voltage bushings.

2.2.1.2 Low Voltage

Low-voltage compartment shall contain low-voltage bushings with NEMA spade terminals, accessories, metering, stainless steel or laser-etched anodized aluminum diagrammatic transformer nameplate, and ground pad.

a. Accessories shall include drain valve with sampler device, fill plug, pressure relief device, liquid level gage, pressure-vacuum gage, and dial type thermometer with maximum temperature indicator.

b. Metering: Provide a socket-mounted electronic programmable outdoor watthour meter, surface mounted flush against the side of the low-voltage compartment as indicated. Meter shall be programmed at the factory. Meter shall be coordinated to system requirements and conform to IEEE C12.16.

(1) Design: Provide meter designed for use on a 3-phase, 4-wire, 480Y/277 volt system with 3 current transformers.

(2) Coordination: Provide meter coordinated with ratios of current transformers and transformer secondary voltage.

(3) Class: 20; Form: 9S; Accuracy: +/- 1.0 percent; Finish: Class II

(4) Cover: Polycarbonate and lockable to prevent tampering and unauthorized removal.

(5) Kilowatt-hour Register: 5 digit electronic programmable type

(6) Demand Register:

a) Provide solid state IEEE C12.15

b) Meter reading multiplier:

1) Indicate multiplier on the meter face.

c) Demand interval length: shall be programmed for 60 minutes with rolling demand up to six subintervals per interval.

(7) Meter fusing: Provide a fuse block mounted in the secondary compartment containing one fuse per phase to protect the voltage input to the watthour meter. Size fuses as recommended by the meter manufacturer.

(8) Socket: IEEE C12.7. Provide NEMA Type 3R, box-mounted socket having automatic circuit-closing bypass and having jaws compatible with requirements of the meter. Cover unused hub openings with blank hub plates.

(9) Current transformers: IEEE C57.13. Provide butyl-molded window type current transformers with 600-volt insulation, 10 kV BIL and mount on the low-voltage bushings. Route current transformer leads in a location as remote as possible from the power transformer secondary cables to permit current measurements to be taken with hook-on-ammeters. Provide three current transformers per power transformer with characteristics listed in

the following table.

kVA	Sec. Volt	CT Ratio	RF	Meter Acc. Class
1500	480Y/277	2000/5	1.5	0.3 thru B-0.5

2.2.2 Transformer

a. Oil-insulated, two winding, 60 hertz, 65 degrees C rise above a 30 degrees C average ambient, self-cooled type.

b. Transformer shall be rated 1500 kVA, 125 kV BIL.

c. Transformer voltage ratings: 22 kV - 480Y/277 V.

d. Tap changer shall be externally operated, manual type for changing tap setting when the transformer is de-energized. Provide four 2.5 percent full capacity taps, two above and two below rated primary voltage. Tap changers shall clearly indicate which tap setting is in use.

e. Minimum tested impedance shall not be less than 5.5 percent at 85 degrees C.

f. Audible sound levels shall comply with the following:

kVA	DECIBELS (MAX)
1000	58

g. Transformer shall include lifting lugs and provisions for jacking under base. The transformer base construction shall be suitable for using rollers or skidding in any direction. Provide transformer top with an access handhole. Transformer shall have its kVA rating conspicuously displayed on its enclosure. The transformer shall have an insulated low-voltage neutral bushing with NEMA spade terminal, and with removable ground strap.

2.2.2.1 Specified Transformer Losses

No-load losses (NLL) shall be 3950 watts at 20 degrees C and load losses (LL) shall be 14,000 watts at 85 degrees C. The values for the specified losses shall be used for comparison with the losses determined during the routine tests. If the routine test values for no-load losses exceed the specified no-load losses by more than 10 percent, or the total losses exceed the specified total losses (sum of no-load and load losses) by more than 6 percent, the transformer is unacceptable.

2.2.3 Insulating Liquid

a. Mineral oil: ASTM D3487, Type II, tested in accordance with ASTM D117. Provide identification of transformer as "non-PCB" and "Type II mineral oil" on the nameplate.

2.2.4 Corrosion Protection

Bases and cabinets of transformers shall be corrosion resistant and shall

be fabricated of stainless steel conforming to ASTM A167, Type 304 or 304L. Base shall include any part of pad-mounted transformer that is within 3 inches of concrete pad. Paint bases, cabinets, and tanks as directed by Contracting Officer. Paint coating system shall comply with NEMA C57.12.28 regardless of base, cabinet, and tank material.

2.3 WARNING SIGNS

Provide as specified in Section 16050N, "Basic Electrical Materials and Methods."

2.4 SOURCE QUALITY CONTROL

2.4.1 Transformer Test Schedule

The Government reserves the right to witness tests. Provide transformer test schedule for tests to be performed at the manufacturer's test facility. Submit required test schedule and location, and notify the Contracting Officer 30 calendar days before scheduled test date. Notify Contracting Officer 15 calendar days in advance of changes to scheduled date.

a. Test Instrument Calibration

(1) The manufacturer shall have a calibration program which assures that all applicable test instruments are maintained within rated accuracy.

(2) The accuracy shall be directly traceable to the National Institute of Standards and Technology.

(3) Instrument calibration frequency schedule shall not exceed 12 months for both test floor instruments and leased specialty equipment.

(4) Dated calibration labels shall be visible on all test equipment.

(5) Calibrating standard shall be of higher accuracy than that of the instrument tested.

(6) Keep up-to-date records that indicate dates and test results of instruments calibrated or tested. For instruments calibrated by the manufacturer on a routine basis, in lieu of third party calibration, include the following:

(a) Maintain up-to-date instrument calibration instructions and procedures for each test instrument.

(b) Identify the third party/laboratory calibrated instrument to verify that calibrating standard is met.

2.4.2 Design Tests

IEEE C57.12.00, and IEEE C57.12.90. Section 5.1.2 in IEEE C57.12.80 states that "design tests are made only on representative apparatus of basically the same design." Submit design test reports (complete with test data, explanations, formulas, and results), in the same submittal package as the catalog data and drawings for the transformer. Design tests shall have

been performed prior to the award of this contract.

a. Tests shall be certified and signed by a registered professional engineer.

b. Temperature rise: "Basically the same design" for the temperature rise test means a pad-mounted transformer with the same coil construction (such as wire wound primary and sheet wound secondary), the same kVA, the same cooling type (OA), the same temperature rise rating, and the same insulating liquid as the transformer specified.

c. Lightning impulse: "Basically the same design" for the lightning impulse dielectric test means a pad-mounted transformer with the same BIL, the same coil construction (such as wire wound primary and sheet wound secondary), and a tap changer, if specified. Design lightning impulse tests shall include both the primary and secondary windings of that transformer.

(1) IEEE C57.12.90, paragraph 10.3 entitled "Lightning Impulse Test Procedures," and IEEE C57.98.

(2) State test voltage levels.

(3) Provide photographs of oscilloscope display waveforms or plots of digitized waveforms with test report.

d. Lifting and moving devices: "Basically the same design" requirement for the lifting and moving devices test means a test report confirming that the lifting device being used is capable of handling the weight of the specified transformer in accordance with IEEE C57.12.26.

e. Pressure: "Basically the same design" for the pressure test means a pad-mounted transformer with a tank volume within 30 percent of the tank volume of the transformer specified.

2.4.3 Routine and Other Tests

IEEE C57.12.00. Routine and other tests shall be performed by the manufacturer on the actual transformer prepared for this project to ensure that the design performance is maintained in production. Submit test reports, by serial number and receive approval before delivery of equipment to the project site. Required tests and testing sequence shall be as follows:

a. Cold resistance measurements (provide reference temperature)

b. Phase relation

c. Ratio

d. No-load losses (NLL) and excitation current

e. Load losses (LL) and impedance voltage

f. Dielectric

(1) Impulse

(a) State test voltage levels

(b) Provide photographs of oscilloscope display waveforms or plots of digitized waveforms with test reports. As an alternative, photographs of oscilloscope display waveforms or plots of digitized waveforms may be hand-delivered at the factory witness test.

(2) Applied voltage

(3) Induced voltage

g. Leak

PART 3 EXECUTION

3.1 INSTALLATION

Electrical installations shall conform to IEEE C2, NFPA 70, and to requirements specified herein. Provide new equipment and materials unless indicated or specified otherwise.

3.2 GROUNDING

NFPA 70 and IEEE C2, except that grounding systems shall have a resistance to solid earth ground not exceeding 10 ohms.

3.2.1 Grounding Electrodes

Provide driven ground rods as specified in Section 16302N, "Underground Transmission and Distribution". Connect ground conductors to the upper end of ground rods by exothermic weld. Provide compression connectors at equipment end of ground conductors.

3.2.2 Pad-Mounted Transformer Grounding

Provide separate copper grounding conductors and connect them to the ground loop as indicated.

3.2.3 Connections

Make joints in grounding conductors and loops by exothermic weld. Exothermic welds and compression connectors shall be installed as specified in Section 16302N, "Underground Transmission and Distribution."

3.2.4 Grounding and Bonding Equipment

UL 467, except as indicated or specified otherwise.

3.3 INSTALLATION OF EQUIPMENT AND ASSEMBLIES

Install and connect pad-mounted transformers furnished under this section as indicated on project drawings, the approved shop drawings, and as specified herein.

3.3.1 Meters and Current Transformers

NEMA C12.1.

3.4 FOUNDATION FOR EQUIPMENT AND ASSEMBLIES

Mount transformer on raised steel frame as specified in Division 05.

3.5 FIELD QUALITY CONTROL

3.5.1 Performance of Acceptance Checks and Tests

Perform in accordance with the manufacturer's recommendations and include the following visual and mechanical inspections and electrical tests, performed in accordance with NETA ATS.

3.5.1.1 Pad-Mounted Transformers

a. Visual and mechanical inspection

(1) Compare equipment nameplate information with specifications and approved shop drawings.

(2) Inspect physical and mechanical condition. Check for damaged or cracked insulators and leaks.

(3) Inspect all bolted electrical connections for high resistance using low-resistance ohmmeter, verifying tightness of accessible bolted electrical connections by calibrated torque-wrench method, or performing thermographic survey.

(4) Verify correct liquid level in tanks.

(5) Perform specific inspections and mechanical tests as recommended by manufacturer.

(6) Verify correct equipment grounding.

(7) Verify the presence of transformer surge arresters.

b. Electrical tests

(1) Perform resistance measurements through all bolted connections with low-resistance ohmmeter, if applicable.

(2) Perform insulation-resistance tests.

(3) Perform turns-ratio tests.

(4) Perform insulation power-factor/dissipation-factor tests on windings.

(5) Sample insulating liquid. Sample shall be tested for:

(a) Dielectric breakdown voltage

(b) Acid neutralization number

(c) Specific gravity

(d) Interfacial tension

(e) Color

(f) Visual condition

(g) Water in insulating liquid

(h) Measure dissipation factor or power factor

(6) Perform dissolved gas analysis (DGA).

(7) Test for presence of PCB.

(8) Verify that the tap-changer is set at specified ratio.

(9) Verify proper secondary voltage phase-to-phase and phase-to-neutral after energization and prior to loading.

3.5.1.2 Current Transformers

a. Visual and mechanical inspection

(1) Compare equipment nameplate data with specifications and approved shop drawings.

(2) Inspect physical and mechanical condition.

(3) Verify correct connection.

(4) Verify that adequate clearances exist between primary and secondary circuit.

(5) Inspect all bolted electrical connections for high resistance using low-resistance ohmmeter, verifying tightness of accessible bolted electrical connections by calibrated torque-wrench method, or performing thermographic survey.

(6) Verify that required grounding and shorting connections provide good contact.

b. Electrical tests

(1) Perform resistance measurements through all bolted connections with low-resistance ohmmeter, if applicable.

(2) Perform insulation-resistance test.

(3) Perform a polarity test.

(4) Perform a ratio-verification test.

3.5.1.3 Watthour Meter

a. Visual and mechanical inspection

(1) Compare equipment nameplate data with specifications and approved shop drawings.

(2) Inspect physical and mechanical condition.

(3) Verify tightness of electrical connections.

b. Electrical tests

(1) Calibrate watthour meters according to manufacturer's published data.

(2) Verify that correct multiplier has been placed on face of meter, where applicable.

(3) Verify that current transformer secondary circuits are intact.

3.5.1.4 Grounding System

a. Visual and mechanical inspection

(1) Inspect ground system for compliance with contract plans and specifications.

b. Electrical tests

Perform ground-impedance measurements utilizing the fall-of-potential method. Take measurements in normally dry weather, not less than 48 hours after rainfall. Use a portable ground testing megger in accordance with manufacturer's instructions to test each ground or group of grounds. The instrument shall be equipped with a meter reading directly in ohms or fractions thereof to indicate the ground value of the ground rod or grounding systems under test.

Submit the measured ground resistance of each ground rod and grounding system, indicating the location of the rod and grounding system. Include the test method and test setup (i.e., pin location) used to determine ground resistance and soil conditions at the time the measurements were made.

3.5.2 Follow-Up Verification

Upon completion of acceptance checks and tests, the Contractor shall show by demonstration in service that circuits and devices are in good operating condition and properly performing the intended function. As an exception to requirements stated elsewhere in the contract, the Contracting Officer shall be given 5 working days advance notice of the dates and times of checking and testing.

-- End of Section --

SECTION 16302N

UNDERGROUND TRANSMISSION AND DISTRIBUTION
09/99

PART 1 GENERAL

1.1 REFERENCES

The publications listed below form a part of this specification to the extent referenced. The publications are referred to in the text by the basic designation only.

ASSOCIATION OF EDISON ILLUMINATING COMPANIES (AEIC)

AEIC CS1	(1990) Impregnated Paper Insulated, Lead Covered Cable, Solid Type

AMERICAN NATIONAL STANDARDS INSTITUTE (ANSI)

ANSI C2	(1997) National Electrical Safety Code

AMERICAN SOCIETY FOR TESTING AND MATERIALS (ASTM)

ASTM B 1	(1995) Hard-Drawn Copper Wire
ASTM B 8	(1995) Concentric-Lay-Stranded Copper Conductors, Hard, Medium-Hard, or Soft

INSTITUTE OF ELECTRICAL AND ELECTRONICS ENGINEERS (IEEE)

IEEE 48	(1996) High-Voltage Alternating-Current Cable Terminations
IEEE 404	(1993) Cable Joints for Use with Extruded Dielectric Cable Rated 5000-138 000 V and Cable Joints for Use with Laminated Dielectric Cable Rated 2500-500,000 V

NATIONAL ELECTRICAL MANUFACTURERS ASSOCIATION (NEMA)

NEMA RN 1	(1989) Polyvinyl-Chloride (PVC) Externally Coated Galvanized Rigid Steel Conduit and Intermediate Metal Conduit
NEMA TC 2	(1990) Electrical Plastic Tubing (EPT) and Conduit (EPC-40 and EPC-80)
NEMA TC 3	(1990) PVC Fittings for Use with Rigid PVC Conduit and Tubing
NEMA TC 9	(1990) Fittings for ABS and PVC Plastic Utilities Duct for Underground Installation
NEMA WC 8	(1993) Ethylene-Propylene-Rubber-Insulated Wire and Cable for the Transmission and Distribution of Electrical Energy

INTERNATIONAL ELECTRICAL TESTING ASSOCIATION (NETA)

NETA ATS	(1991) Electrical Power Distribution Equipment and Systems

NATIONAL FIRE PROTECTION ASSOCIATION (NFPA)

NFPA 70	(1999) National Electrical Code
NFPA 70B	(1998) Electrical Equipment Maintenance

UNDERWRITERS LABORATORIES (UL)

UL 6	(1997) Rigid Metal Conduit
UL 83	(1998) Thermoplastic-Insulated Wires and Cables
UL 467	(1993; Bul. 1994, R 1996) Grounding and Bonding Equipment
UL 486A	(1997; R 1998) Wire Connectors and Soldering Lugs for Use With Copper Conductors
UL 510	(1994; R 1998) Chloride, Polyethylene, and Rubber Insulating Tape
UL 514A	(1996; R 1998) Metallic Outlet Boxes
UL 514B	(1997; R 1998) Fittings for Cable and Conduit
UL 651	(1995; R 1998) Schedule 40 and 80 Rigid PVC Conduit
UL 854	(1996; Bul. 1997 R 1998) Service-Entrance Cables
UL 1242	(1996; R 1998) Intermediate Metal Conduit

1.2 RELATED REQUIREMENTS

Section 16050N, "Basic Electrical Materials and Methods" and Section 02582N, "Electrical Manhole and Handhole," applies to this section with additions and modifications specified herein.

1.2.1 Underground Service

Terminate underground service into pad mounted transformer, as indicated. Protect ends of underground conduit with threaded metal caps or plastic plugs as applicable until connections are made.

1.3 DEFINITIONS

a. In the text of this section, the words conduit and duct are used interchangeably and have the same meaning.

b. In the text of this section, "medium voltage cable splices," and "medium voltage cable joints" are used interchangeably and have the same meaning.

1.4 SUBMITTALS

Submit the following in accordance with Section 01330 ,"Submittal Procedures."

SD-02 Shop Drawings

Proposed precast sectional underground duct bank; G

SD-03 Product Data

Medium voltage cable; G

Medium voltage cable joints; G

Medium voltage cable terminations; G

600 volt wires and cables

SD-06 Test Reports

Acceptance checks and tests; G

Identify each cable for 600-volt, and medium voltage cable tests. When testing grounding electrodes and systems, identify each electrode and system for each test, as well as the resistance and soil conditions at the time the measurement were made.

SD-07 Certificates

Cable splicer/terminator; G

Cable splicer qualifications; G

Thirty calendar days before making splices or terminations, submit names of the cable splicers to be employed, together with proof that splicer has at least 3 years experience in splicing the type and rating of cables specified. Submit certification for each splicer by the cable joint kit manufacturer in the use of manufacturer's kits.

SD-08 Manufacturer's Instructions

Ground megger

"UL listed" kit

Termination kit

Medium-voltage joints

SD-09 Manufacturer's Field Reports

Arc-proofing test for cable fireproofing tape; G

Medium voltage cable tests; G

Factory engineered heat shrinkable joint kit

1.5 QUALITY ASSURANCE

Each cable splicer may be required to make an approved dummy splice in the presence of the Contracting Officer in accordance with cable manufacturer's instructions. The Contractor shall furnish the material for dummy splices.

1.5.1 Cable Splicer Qualifications

a. In order to establish the cable workman's competency, the Contractor shall be required to submit the following within 30 calendar days prior to commencement of the splice/termination:

(1) Documentation to verify that the individual has completed a splice/termination of the type to be installed under this contract. The test splice-termination shall be performed at the job site for this contract under the supervision of the cable accessory manufacturer or his representative and witnessed by the Government.

(2) Documentation that said splice/termination has undergone and passed the following tests by the splice-termination manufacturer or an independent testing laboratory.

TEST		Minimum Value 35 kV
Discharge Ext. Value with 3 pC or less	V	35 kV
AC withstand, 1 minute		75 kV
DC withstand, 15 minutes		100 kV

These results shall be attached for review

(3) A statement of the number of years in which the individual has been splicing/terminating medium voltage cable.

b. Criteria for waiver: Items a.1 and a.2 above may be waived on subsequent jobs provided the following criteria is satisfied:

(1) Documentation of prior completion of items a.1 and a.2 be submitted.

(2) A list of the last three jobs where the specific splices/terminations were installed within the past 12 consecutive months. The tabulation shall include splice/termination manufacturer, catalog number, and the number of splice/terminations installed.

c. Requalifications: Requalification to items a.1 and a.2 in above paragraph may be required if the splice installer can not demonstrate a prior history of splice/termination installation during the previous 12 consecutive months. The contractor shall

furnish the material for splices and terminations.

1.5.2 Test Instrument and Procedure

Submit for use of ground megger with proposed method indicated.

1.5.3 Manufacturer's Test

Submit the manufacturer's test report indicating that performance of the heat shrinkable joint kit is equivalent to the cable rating, in accordance with the applicable sections of IEEE 48, IEEE 404, and AEIC CS1.

PART 2 PRODUCTS

2.1 MATERIALS AND EQUIPMENT

2.1.1 Conduit

2.1.1.1 Rigid Metal Conduit

UL 6, galvanized steel, threaded type.

2.1.1.2 Intermediate Metal Conduit

UL 1242, galvanized steel, threaded type.

2.1.1.3 Intermediate Metal conduit, PVC Coated

UL 1242, galvanized steel, threaded type, coated with a polyvinyl chloride (PVC) sheath bonded to the galvanized exterior surface, nominal 40 mils thick, conforming to NEMA RN 1, Type A40, except that hardness shall be nominal 85 Shore A durometer, dielectric strength shall be minimum 400 volts per mil at 60 Hz, tensile strength shall be minimum 3500 psi, and aging shall be minimum 1000 hours in an Atlas Weatherometer.

2.1.1.4 Plastic Conduit for Direct Burial

NEMA TC 2, EPC-40-PVC.

2.1.1.5 Plastic Utilities Duct for Concrete Encasement

NEMA TC 2, EPC-40-PVC

2.1.2 Fittings

2.1.2.1 Metal Fittings

UL 514B, threaded type.

2.1.2.2 PVC Conduit Fittings

NEMA TC 3, UL 514B and UL 651.

2.1.2.3 PVC Duct Fittings

NEMA TC 9.

2.1.2.4 Outlet Boxes for Steel Conduit

Outlet boxes for use with rigid or flexible steel conduit shall be cast-metal cadmium or zinc-coated if of ferrous metal with gasketed closures and shall conform to UL 514A.

2.1.3 Conductors Rated 600 Volts and Less

Conductor and conduit sizes indicated are for copper conductors unless otherwise noted. Insulated conductors shall have the date of manufacture and other identification imprinted on the outer surface of each cable at regular intervals throughout the cable length. Wires and cables manufactured more than 24 months prior to date of delivery to the site shall not be used.

2.1.3.1 600 Volt Wires and Cables

Service entrance and direct buried conductors shall conform to UL 854, Type USE. Conductors in conduit other than service entrance shall conform to UL 83, Type THWN. Conductor size and number of conductors in each cable shall be as indicated. Conductors shall be color coded. Conductor identification shall be provided within each enclosure where a tap, splice, or termination is made. Conductor identification shall be by color-coded insulated conductors, plastic-coated self-sticking printed markers, colored nylon cable ties and plates, or heat shrink type sleeves. Control circuit terminations shall be properly identified. Conductors No. 10 AWG and smaller shall be solid copper. Conductors No. 8 AWG and larger shall be stranded copper. All conductors shall be copper.

a. Colors for coding conductors shall be:

208-VOLT SYSTEM	480-VOLT SYSTEM
Neutral - White	Neutral - White
Phase A - Black	Phase A - Brown
Phase B - Red	Phase B - Orange
Phase C - Blue	Phase C - Yellow
Grounding conductor - Green	Grounding conductor - Green

2.1.4 600 Volt Wire Connector and Terminals

Shall provide a uniform compression over the entire contact surface. Solderless terminal lugs shall be used on stranded conductors.

a. For use with copper conductors: UL 486A.

2.1.5 Medium Voltage Cable

Cable (conductor) sizes are designated by American Wire Gauge (AWG) and Thousand Circular Mils (Kcmil). Conductor and conduit sizes indicated are for copper conductors unless otherwise noted. Insulated conductors shall have the date of manufacture and other identification imprinted on the outer surface of each cable at regular intervals throughout cable length. Wires and cables manufactured more than 24 months prior to date of delivery to the site shall not be accepted.

Cable for 22 kV underground distribution system shall be ozone resistant ethylene-propylene-rubber-insulated (EPR) cable conforming to NEMA WC 8. Cable shall be threeconductor, employing concentric, Class B stranded copper conductors. Cable shall have conductor and insulation shielding. Insulation shielding shall be metal tape type consisting of a concentric

serving of tape according to NEMA WC 8. Cable shall be rated 35 kV, EPR, 100 percent insulation level. Cable shall have a polyvinyl chloride jacket.

2.1.6 Medium Voltage Cable Terminations

IEEE 48 Class 1. Provide terminations including stress control terminator, ground clamp, connectors, and lugs. Terminator shall be the product of one manufacturer, suitable for the type and materials of the cable terminated. Furnish components in the form of a "UL listed" kit, including complete instructions which shall be followed for assembly and installation. Provide terminator as specified herein for terminating single conductor, or the single conductor of multiconductor, solid insulated, nonmetallic jacketed type cables for service voltage up to 35 KV indoor and outdoor. Do not use separate parts of copper or copper alloy in contact with aluminum alloy parts in the construction or installation of the terminator.

2.1.6.1 Indoor Terminations/Terminations Within Equipment Enclosures

Indoor terminator shall be cold-shrink type or heat shrinkable type.

a. Cold-Shrink Type:

Terminator shall be a one-piece design, where high-dielectric constant (capacitive) stress control is integrated within a skirted insulator made of silicone rubber, munsel gray in color. Termination shall not require heat or flame for installation. Termination kit shall contain all necessary materials (except for the lugs). Termination shall be designed for installation in low or highly contaminated indoor and outdoor locations and shall be rated for continuous operation at 90 degree C, with an emergency overload temperature rating of 130 degree C.

b. Heat Shrinkable Type

Terminator shall consist of a uniform cross section heat shrinkable polymeric construction stress relief tubing and environmentally sealed outer covering that is nontracking, resists heavy atmospheric contaminants, ultra violet rays and oxidative decomposition. Provide heat shrinkable sheds or skirts of the same material.

2.1.6.2 Outdoor Terminations

Outdoor terminator shall be cold shrink type or porcelain insulator.

a. Cold-Shrink Type:

Terminator shall be a one-piece design, where high-dielectric constant (capacitive) stress control is integrated within a skirted insulator made of silicone rubber, munsel gray in color. Termination shall not require heat or flame for installation. Termination kit shall contain all necessary materials (except for the lugs). Termination shall be designed for installation in low or highly contaminated indoor and outdoor locations and shall be rated for continuous operation at 90 degree C, with an emergency overload temperature rating of 130 degree C.

b. Porcelain Insulator Type

Terminator shall comply with requirements of IEEE 48 Class 1, except that the requirements of design tightness test need not be met. However, the terminator shall not exude any insulating filler compound under either test

or service. Terminator shall consist of a porcelain insulator, copper cable connector-hoodnut assembly and copper aerial lug as required, metal body and supporting bracket, sealed cable entrance, internal stress relief device for shielded cable, and insulating filler compound or material.

2.1.6.3 Termination; Separable Insulated Connector Type

Provide as specified in Section 16272N, "Pad-Mounted Transformers".

2.1.7 Medium Voltage Cable Joints

Provide joints (splices) in accordance with IEEE 404 suitable for the rated voltage, insulation level, and insulation type of the cable. Upon request, supply manufacturer's design qualification test report in accordance with IEEE 404. Connectors for joint shall be tin-plated electrolytic copper, having ends tapered and having center stops to equalize cable insertion. Connectors shall be rated for voltage of 35 kV minimum.

a. Heat-shrinkable joint: Consists of a uniform cross-section heat-shrinkable polymeric construction with a linear stress relief system, a high dielectric strength insulating material, and an integrally bonded outer conductor layer for shielding. Replace original cable jacket with a heavy-wall heat-shrinkable sleeve with hot-melt adhesive coating.

b. Watertight taped-type joint: Consists of an approved connector, self-fusing or self-bonding insulating tape, self-fusing semiconducting tape, tinned copper shielding tape or braid, and plastic tape.

2.1.8 Tape

2.1.8.1 Insulating Tape

UL 510, plastic insulating tape, capable of performing in a continuous temperature environment of 80 degrees C.

2.1.8.2 Buried Warning and Identification Tape

Provide detectable aluminum foil plastic-backed tape or detectable magnetic plastic tape manufactured specifically for warning and identification of buried cable and conduit. Tape shall be detectable by an electronic detection instrument. Provide tape in rolls, 2 inches minimum width, color coded for the utility involved with warning and identification imprinted in bold black letters continuously and repeatedly over entire tape length. Warning and identification shall be CAUTION BURIED ELECTRIC, TELEPHONE CABLE BELOW or similar. Use permanent code and letter coloring unaffected by moisture and other substances contained in trench backfill material.

2.1.8.3 Fireproofing Tape

Fireproofing tape shall be approximately 30 mils thick by 3 inches wide and shall consist of a flexible, unsupported elastomer that expands in fire to provide a thick char buildup between the flame and the cable. Tape shall be noncorrosive to cable sheath. Tape shall not give off a smoke when subjected to flame or support combustion. Tape shall not deteriorate when subjected to oil, water, gases, salt water, sewage, and fungus.

2.1.9 Pull Rope

Shall be plastic having a minimum tensile strength of 200 pounds. Leave a minimum of 24 inches of slack at each end of the pull wires.

2.1.10 Grounding and Bonding Equipment

UL 467. Ground rods shall be copper clad steel with diameter adequate to permit driving to full length of the rod, but not less than 3/4 inch in diameter and 10 feet long unless otherwise indicated.

2.1.11 Cable Tags

Provide as specified in Section 16050N, "Basic Electrical Materials and Methods".

2.2 SOURCE QUALITY CONTROL

2.2.1 Arc-Proofing Test for Cable Fireproofing Tape

Manufacturer shall test one sample assembly consisting of a straight lead tube 12 inches long with a 2 1/2 inch outside diameter, and a 1/8 inch thick wall, and covered with one-half lap layer of arc and fireproofing material per manufacturer's instructions. The arc and fireproofing tape shall withstand extreme temperature of a high-current fault arc 13,000 degrees K for 70 cycles as determined by using an argon directed plasma jet capable of constantly producing and maintaining an arc temperature of 13,000 degrees K. Temperature (13,000 degrees K) of the ignited arc between the cathode and anode shall be obtained from a dc power source of 305 (plus or minus 5) amperes and 20 (plus or minus 1) volts. The arc shall be directed toward the sample assembly accurately positioned 5 (plus or minus 1) millimeters downstream in the plasma from the anode orifice by fixed flow rate of argon gas (0.18 g per second). The sample assembly shall be tested at three unrelated points. Start time for tests shall be taken from recorded peak current when the specimen is exposed to the full test temperature. Surface heat on the specimen prior to that time shall be minimal. The end point is established when the plasma or conductive arc penetrates the protective tape and strikes the lead tube. Submittals for arc-proofing tape shall indicate that the test has been performed and passed by the manufacturer.

2.2.2 Medium Voltage Cable Tests

Results of AEIC C5 and AEIC CS6 qualification and production tests as applicable for each type of medium voltage cable.

PART 3 EXECUTION

3.1 INSTALLATION

NFPA 70 and ANSI C2.

3.1.1 Contractor Damage

The Contractor shall promptly repair any indicated utility lines or systems damaged by Contractor operations. Damage to lines or systems not indicated, which are caused by Contractor operations, shall be treated as "Changes" under the terms of the General Provisions of the contract. If the Contractor is advised in writing of the location of a nonindicated line or system, such notice shall provide that portion of the line or system

with "indicated" status in determining liability for damages. In any event, the Contractor shall immediately notify the Contracting Officer of any such damage.

3.1.2 Concrete

Concrete work for electrical requirements shall be 3000 psi minimum ultimate 28-day compressive strength with one inch minimum aggregate conforming to the requirements of Section 03300, "Cast-In-Place Concrete".

3.1.3 Underground Conduit/Duct Without Concrete Encasement

Type of conduit shall be EPC-40-PVC.

3.1.3.1 Conduit Installation

Top of the conduit shall be not less than 24 inches below grade, and shall have a minimum slope of 3 inches in each 100 feet away from buildings and toward manholes and other necessary drainage points. Run conduit in straight lines except where a change of direction is necessary. As each conduit run is completed, for conduit sizes 3 inches and larger, draw a flexible testing mandrel approximately 12 inches long with a diameter less than the inside diameter of the conduit through the conduit. After which, draw a stiff bristle brush through until conduit is clear of particles of earth, sand and gravel; then immediately install conduit plugs. For conduit sizes less than 3 inches, draw a stiff bristle brush through until conduit is clear of particles of earth, sand and gravel; then immediately install conduit plugs. Provide not less than 3 inches clearance from the conduit to each side of the trench. A minimum clearance of 3 inches shall be provided between adjacent conduits. Grade bottom of trench smooth; where rock, soft spots, or sharp-edged materials are encountered, excavate the bottom for an additional 3 inches, fill and tamp level with original bottom with sand or earth free from particles, that would be retained on a 1/4 inch sieve. Provide color, type and depth of warning tape as specified in paragraphs "BURIED WARNING AND IDENTIFICATION TAPE" in Section 02316A, "Excavation, Trenching and Backfilling for Utilities Systems".

3.1.3.2 Encasement Under Roads and Structures

Under roads, paved areas, and railroad tracks, install conduits in concrete encasement of rectangular cross-section providing a minimum of 3 inch concrete cover around ducts. Concrete encasement shall extend at least 5 feet beyond the edges of paved areas and roads, and 12 feet beyond the rails on each side of railroad tracks. Conduits to be installed under existing paved areas which are not to be disturbed, and under roads and railroad tracks, shall be zinc-coated, rigid steel, jacked into place.

3.1.3.3 Multiple Conduits

Separate multiple conduits by a minimum distance of 3 inches, except that light and power conduits shall be separated from control, signal, and telephone conduits by a minimum distance of 4 inches. Stagger the joints of the conduits by rows and layers to strengthen the conduit assembly. Provide plastic duct spacers that interlock vertically and horizontally. Spacer assembly shall consist of base spacers, intermediate spacers, and top spacers to provide a completely enclosed and locked-in conduit assembly. Install spacers per manufacturer's instructions, but provide a minimum of two spacer assemblies per 10 feet of conduit assembly.

3.1.4 Underground Duct with Concrete Encasement

Construct underground duct lines of individual conduits encased in concrete. Except where rigid galvanized steel conduit is indicated or specified, the conduit shall be PVC Type EPC-40. Do not mix different kinds of conduit in any one duct bank. Ducts shall not be smaller than 4 inches in diameter unless otherwise indicated. Concrete encasement surrounding the bank shall be rectangular in cross-section and shall provide at least 3 inches of concrete cover for ducts. Separate conduits by a minimum concrete thickness of 3 inches, except separate light and power conduits from control, signal, and telephone conduits by a minimum concrete thickness of 4 inches. Provide color, type and depth of warning tape as specified in paragraphs "BURIED WARNING AND IDENTIFICATION TAPE" in Section 02316A, "Excavation, Trenching and Backfilling for Utilities Systems".

3.1.4.1 Depth of Encasement

Top of the concrete encasement shall not be less than 18 inches below grade except that under roads and pavement concrete be a minimum of 24 inches below grade and under railroad tracks a minimum of 50 inches below top of rails.

3.1.4.2 Slope of Encasement

Duct banks shall have a continuous slope downward toward underground structures and away from buildings with a minimum pitch of 3 inches in 100 feet. Except at conduit risers, accomplish changes in direction of runs exceeding a total of 10 degrees, either vertical or horizontal, by long sweep bends having a minimum radius of curvature of 25 feet; sweep bends may be made up of one or more curved or straight sections or combinations thereof. Manufactured bends shall have a minimum radius of 18 inches for use with conduits of less than 3 inches in diameter and a minimum radius of 36 inches for ducts of 3 inches in diameter and larger. Excavate trenches along straight lines from structure to structure before ducts are laid or structure constructed so the elevation can be adjusted, if necessary, to avoid unseen obstruction.

3.1.4.3 Conduits

Terminate conduits in end-bells where duct lines enter underground structures. Stagger conduit joints by rows and layers to strengthen the duct bank. Provide plastic duct spacers that interlock vertically and horizontally. Spacer assembly shall consist of base spacers, intermediate spacers, and top spacers to provide a completely enclosed and locked-in duct bank. Install spacers per manufacture's instructions, but provide a minimum of two spacer assemblies per 10 feet of duct bank. Before pouring concrete, anchor duct bank assemblies to prevent the assemblies from floating during concrete pouring. Anchoring shall be done by driving reinforcing rods adjacent to every other duct spacer assembly and attaching the rod to the spacer assembly.

3.1.4.4 Test Mandrel

As each section of a duct line is completed from structure to structure, draw a flexible testing mandrel approximately 12 inches long with a diameter less than the diameter of the conduit through each conduit. After which, draw a stiff bristle brush through the conduit, until conduit is clear of particles of earth, sand, and gravel; then immediately install end

plugs.

3.1.4.5 Conduit Plugs and Pull Rope

New conduit indicated as being unused or empty shall be provided with plugs on each end. Plugs shall contain a weephole or screen to allow water drainage. Provide a plastic pull rope having 3 feet of slack at each end of unused or empty conduits.

3.1.4.6 Connections to Manholes

Duct bank envelopes connecting to underground structures shall be flared to have enlarged cross-section at the manhole entrance to provide additional shear strength. Dimensions of the flared cross-section shall be larger than the corresponding manhole opening dimensions by no less than 12 inches in each direction. Perimeter of the duct bank opening in the underground structure shall be flared toward the inside or keyed to provide a positive interlock between the duct bank and the wall of the structure. Use vibrators when this portion of the encasement is poured to assure a seal between the envelope and the wall of the structure.

3.1.4.7 Connections to Existing Manholes

For duct bank connections to existing structures, break the structure wall out to the dimensions required and preserve steel in the structure wall. Cut steel and extend into bend out to tie into the reinforcing of the duct bank envelope. Chip the perimeter surface of the duct bank opening to form a key or flared surface, providing a positive connection with the duct bank envelope.

3.1.4.8 Connections to Existing Concrete Pads

For duct bank connections to concrete pads, break an opening in the pad out to the dimensions required and preserve steel in pad. Cut the steel and bend out to tie into the reinforcing of the duct bank envelope. Chip out the opening in the pad to form a key for the duct bank envelope.

3.1.4.9 Partially Completed Duct Banks

During construction wherever a construction joint is necessary in a duct bank, prevent debris such as mud, and, and dirt from entering ducts by providing suitable conduit plugs. Fit concrete envelope of a partially completed duct bank with reinforcing steel extending a minimum of 2 feet back into the envelope and a minimum of 2 feet beyond the end of the envelope. Provide one No. 4 bar in each corner, 3 inches from the edge of the envelope. Secure corner bars with two No. 3 ties, spaced approximately one footapart. Restrain reinforcing assembly from moving during concrete pouring.

3.1.4.10 Optional Precast Sectional Underground Duct Bank

The Contractor may choose to substitute concrete, precast, sectional, underground duct bank, with PVC conduits, for the cast-in-place underground conduit with concrete encasement. Key and tie together precast sections in a manner to provide the strength and integrity of a cast-in-place structure. Keep conduits in alignment from section to section to provide a smooth surface for pulling cables. Lock precast sections together so that the maximum gap after settlement does not exceed 1/4 inch. Fill gaps between concrete sections with flexible plastic grouting material to

prevent entry of water and foreign material. Install rebar in precast sections in accordance with the requirements of cast-in-place duct banks. Key the precast duct bank into manholes, with a cast-in-place section, of 3 feet minimum, joining the last section to each manhole. The alignment vertically and horizontally of any two adjacent sections shall not vary more than 1/4 inch when measured from end of conduit to end of conduit. Concrete strength shall be the same as for cast-in-place units. Precast duct banks without the PVC conduits will not be permitted.

3.1.5 Buried Warning and Identification Tape

Bury tape with the printed side up at a depth of 12 inches below the top surface of earth or the top surface of the subgrade under pavements.

3.1.6 Cable Pulling

Test existing duct lines with a mandrel and thoroughly swab out to remove foreign material before pulling cables. Pull cables down grade with the feed-in point at the manhole or buildings of the highest elevation. Use flexible cable feeds to convey cables through manhole opening and into duct runs. Do not exceed the specified cable bending radii when installing cable under any conditions, including turnups into switches, transformers, switchgear, switchboards, and other enclosures. Cable with tape or wire shield shall have a bending radius not less than 12 times the overall diameter of the completed cable. If basket-grip type cable-pulling devices are used to pull cable in place, cut off the section of cable under the grip before splicing and terminating.

3.1.6.1 Cable Lubricants

Use lubricants that are specifically recommended by the cable manufacturer for assisting in pulling jacketed cables. Lubricant shall not be deleterious to the cable sheath, jacket, or outer coverings.

3.1.6.2 Cable Pulling Tensions

Tensions shall not exceed the maximum pulling tension recommended by the cable manufacturer. Monitor pulling tension during cable installation to ensure maximum pulling tension is not exceeded.

3.1.6.3 Secondary Cable Runs, 600 Volts and Less

Provide insulated copper equipment grounding conductor, sized as required by the rating of the overcurrent device supplying the phase conductors.

3.1.6.4 Cables in Manholes and Handholes

Do not install cables utilizing the shortest route, but route along those walls providing the longest route and the maximum spare cable lengths. Form cables to closely parallel walls, not to interfere with duct entrances, and support on brackets and cable insulators at a maximum of 2 feet. Support cable splices in underground structures by racks on each side of the splice. Locate splices to prevent cyclic bending in the spliced sheath. Install cables at middle and bottom of cable racks, leaving top space open for future cables, except as otherwise indicated for existing installations. Provide one spare three-insulator rack arm for each cable rack in each underground structure. In existing manholes, handholes and vaults where new ducts are to be terminated or where new cables are to be installed, modify the existing installation of cables, cable supports and

grounding as required for a uniform installation with cables carefully arranged and supported in the same manner as specified for new cable.

3.1.6.5 Cable Tags in Manholes and Handholes

Provide cable markers (or tags) as specified in Section 16050N, "Basic Electrical Materials and Methods."

3.1.6.6 Conductors Installed in Parallel

Conductors shall be grouped such that each conduit of a parallel run contains 1 Phase A conductor, 1 Phase B conductor, 1 Phase C conductor, and 1 neutral conductor.

3.1.7 600 Volt Cable Terminating

Protect terminations of insulated power and lighting cables from accidental contact, deterioration of coverings and moisture by providing terminating devices and materials. Install terminations of insulated power and lighting cables in accordance with the manufacturer's requirements. Make terminations with materials and methods as indicated or specified herein or as designated by the written instructions of the cable manufacturer and termination kit manufacturer.

3.1.7.1 Splices for 600 Volt Class Cables

600V class cables shall not be spliced.

3.1.8 Medium Voltage Cable Terminations

Provide terminating devices and materials to protect medium voltage cable terminations from accidental contact, deterioration of coverings, and moisture. Make terminations by using materials and methods specified herein and as designated by the written instruction of the cable manufacturer and termination kit manufacturer. Termination for high-voltage cables shall be rated, and be capable of withstanding test voltages, in accordance with IEEE 48. Terminations of single- and multiconductor cables shall include the securing and sealing of the sheath and insulation of the cable conductors, stress relief and grounding of cable shields of shielded cable, and grounding of neutral conductors, metallic sheaths, and armor. Adequately support cables and cable terminations to avoid any excessive strain on the termination and the conductor connection.

3.1.9 Medium Voltage Cable Joints

Provide power cable joints (splices) suitable for continuous immersion in water. Make joints only in accessible locations in manholes or handholes by using materials and methods specified herein and as designated by the written instructions of the cable manufacturer and the joint kit manufacturer. Size connectors properly for the cable being connected and crimp using a full circle compression tool.

Provide power cable joints suitable for direct burial or continuous immersion in water and made only in accessible locations in manholes or handholes.

a. Make medium-voltage joints by using a kit of one manufacturer and with written approval of the manufacturer of the cable which is to

be spliced. Provide the Contracting Officer with a copy of the manufacturer's instructions before jointing is started. Upon request, supply manufacturer's design qualification test report in accordance with IEEE 404. Joint design shall have been proof tested in accordance with IEEE 404. Connectors for joint shall be tin-plated electrolytic copper, having ends tapered and having center stops to equalize cable insertion.

(1) EPR cast-type joint: Provide insulation by means of a molded casting process employing an ethylene propylene-rubber (EPR) jointing compound which results in an inseparable bond between the jointing material and cable insulation. The molding process shall include injection of molding material into the mold to ensure void-free joints.

3.1.9.1 Joints in Shielded Cables

Cover the joined area with metallic tape, or material like the original cable shield and connect it to the cable shield on each side of the splice. Provide a bare copper ground connection brought out in a watertight manner and grounded to a ground rod as part of the splice installation. Ground conductors, connections, and rods shall be as specified elsewhere in this section. Wire shall be trained to the sides of the enclosure to prevent interference with the working area.

3.1.10 Cable End Caps

Cable ends shall be sealed at all times with coated heat shrinkable end caps. Cables ends shall be sealed when the cable is delivered to the job site, while the cable is stored and during installation of the cable. The caps shall remain in place until the cable is spliced or terminated. Sealing compounds and tape are not acceptable substitutes for heat shrinkable end caps. Cable which is not sealed in the specified manner at all times will be rejected.

3.1.11 Live End Caps

Provide live end caps for single conductor medium voltage cables where indicated.

3.1.12 Fireproofing of Cables in Manholes and Handholes

Fireproof (arc proof) wire and cables which will carry current at 2200 volts or more in manholes and handholes.

3.1.12.1 Fireproofing Tape

Tightly wrap strips of fireproofing tape around each cable spirally in half-laped wrapping. Install tape in accordance with manufacturer's instructions.

3.1.12.2 Tape-Wrap

Tape-wrap lead-sheathed or other metallic-sheathed or metallic armored cables without a nonmetallic protective covering over the sheath or armor prior to application of fireproofing. Wrap shall be in the form of two tightly applied half-lapped layers of a pressure-sensitive 10 mil thick plastic tape, and shall extend not less than one inch into the duct. Even out irregularities of the cable, such as at splices, with insulation putty

before applying tape.

3.1.13 Grounding Systems

Noncurrent-carrying metallic parts associated with electrical equipment shall have a maximum resistance to solid earth ground not exceeding the following values:

Pad-mounted transformers without protective fences: 10 ohms

Grounded secondary distribution system neutral and noncurrent-carrying metal parts associated with distribution systems and grounds not otherwise covered: 10 ohms

When work in addition to that indicated or specified is directed in order to obtain the specified ground resistance, the provisions of the contract covering "Changes" shall apply.

3.1.13.1 Grounding Electrodes

Provide cone pointed driven ground rods driven full depth plus 6 inches, installed to provide an earth ground of the appropriate value for the particular equipment being grounded.

3.1.13.2 Grounding Connections

Make grounding connections which are buried or otherwise normally inaccessible, by exothermic weld.

a. Make exothermic welds strictly in accordance with the weld manufacturer's written recommendations. Welds which are "puffed up" or which show convex surfaces indicating improper cleaning are not acceptable. Mechanical connectors are not required at exothermic welds.

b. Make compression connections using a hydraulic compression tool to provide the correct circumferential pressure. Tools and dies shall be as recommended by the manufacturer. An embossing die code or other standard method shall provide visible indication that a connector has been adequately compressed on the ground wire.

3.1.13.3 Grounding Conductors

Grounding conductors shall be stranded-bare copper conforming to ASTM B 8, Class B, for sizes No. 6 AWG and larger, and shall be solid-bare copper conforming to ASTM B 1 for sizes No. 8 and smaller. Cable sheaths, cable shields, conduit, and equipment shall be grounded with No. 6 AWG.

3.1.13.4 Ground Cable Crossing Expansion Joints

Protect ground cables crossing expansion joints or similar separations in structures and pavements by use of approved devices or methods of installation which provide the necessary slack in the cable across the joint to permit movement. Use stranded or other approved flexible copper cable across such separations.

3.1.13.5 Ground Rod Connections

Connect ground rods only to insulated copper ground conductor and weld the

connection. Insulate entire area of the rod in the vicinity of the weld in accordance with UL 467 and the connecting wire and seal against moisture penetration.

3.1.14 Special Conditions

During the construction of duct banks and underground structures located in streets, the streets shall remain open to traffic. Plan and execute the work to meet this condition. At locations where duct banks cross railroad tracks and the work requires closing of the tracks, secure permission from the Contracting Officer for each track closure.

3.1.15 Earthwork for Utilities

Section 02316A, "Excavation, Trenching and Backfilling for Utilities Systems".

3.1.16 Reconditioning of Surfaces

3.1.16.1 Unpaved Surfaces

Restore to their original elevation and condition unpaved surfaces disturbed during installation of duct or direct burial cable. Preserve sod and topsoil removed during excavation and reinstall after backfilling is completed. Replace sod that is damaged by sod of quality equal to that removed. When the surface is disturbed in a newly seeded area, re-seed the restored surface with the same quantity and formula of seed as that used in the original seeding per Section 02921A, "Seeding".

3.1.16.2 Paving Repairs

Where trenches, pits, or other excavations are made in existing roadways and other areas of pavement where surface treatment of any kind exists , restore such surface treatment or pavement the same thickness and in the same kind as previously existed, except as otherwise specified, and to match and tie into the adjacent and surrounding existing surfaces.

3.1.17 Certificate of Competency for Cable Splicer/Terminator

Certification of the qualification of the cable splicer/terminator shall be submitted, for approval, 30 days before splices or terminations are to be made in medium voltage (5 kV to 35 kV) cables. The certification shall include the training, and experience of the individual on the specific type and classification of cable to be provided under this contract. The certification shall indicate that the individual has had three or more years recent experience splicing and terminating medium voltage cables. The certification shall also list a minimum of three splices/terminations that have been in operation for more than one year. In addition, the individual may be required to perform a dummy or practice splice/termination in the presence of the Contracting Officer, before being approved as a qualified cable splicer. If that additional requirement is imposed, the Contractor shall provide short sections of the approved types of cables along with the approved type of splice/termination kit, and detailed manufacturer's instructions for the cable to be spliced. The Contracting Officer reserves the right to require additional proof of competency or to reject the individual and call for certification of an alternate cable splicer.

3.2 FIELD QUALITY CONTROL

As an exception to requirements that may be stated elsewhere in the contract, notify the Contracting Officer 7 working days prior to each test. Furnish labor, equipment. and incidentals required for testing, except that the Government will provide electric power required for the tests. Correct defects in the work provided by the Contractor and repeat tests until the work is in compliance with contract requirements.

3.2.1 Performance of Acceptance Checks and Tests

Perform in accordance with the manufacturer's recommendations, NFPA 70B, NETA ATS, and referenced ANSI standards. Include the following visual and mechanical inspections and electrical tests, performed in accordance with NETA ATS.

3.2.1.1 600 Volt Cable Tests

Perform tests after wiring is completed, connected, and ready for operation, but prior to placing system in service and before any branch circuit breaker is closed.

a. Visual and Mechanical Inspection

(1) Inspect cables for physical damage and proper connection in accordance with contract plans and specifications.

(2) Test cable mechanical connections to manufacturer's recommended values using a calibrated torque wrench. In the absence of manufacturer's data use NETA recommended values.

(3) Check cable color coding for compliance with contract specifications.

b. Electrical Tests

(1) Perform insulation-resistance test on each conductor with respect to ground and adjacent conductor; applied potential shall be 1000 volts DC for 1 minute; minimum insulation-resistance values shall not be less than 2 megohms.

(2) Perform continuity test to insure proper cable connection.

3.2.1.2 Medium Voltage Cables

Perform tests after installation of cable, splices, and terminators and before terminating to equipment.

a. Visual and Mechanical Inspection

(1) Inspect exposed cable sections for physical damage.

(2) Verify that cable is supplied and connected in accordance with contract plans and specifications.

(3) Inspect for proper shield grounding, cable support, and cable termination.

(4) Verify that cable bends are not less than ICEA or manufacturer's minimum allowable bending radius.

(5) Inspect for proper fireproofing.

(6) If cables are terminated through window-type CT's, make an inspection to verify that neutrals and grounds are properly terminated for proper operation of protective devices.

(7) Visually inspect jacket and insulation condition.

(8) Inspect for proper phase identification and arrangement.

b. Electrical Tests

(1) Perform a shield continuity test on each power cable by ohmmeter method. Record ohmic value, resistance values in excess of 10 ohms per 1000 feet of cable must be investigated and justified.

(2) Perform a DC high-potential test on all cables. Adhere to precautions and limits as specified in the applicable NEMA/ICEA Standard for the specific cable. Test procedure shall be as follows, and the results for each cable test shall be recorded as specified herein. Field acceptance test voltage for 25 kV cable shall be 80 kV DC.

(a) Current-sensing circuits in test equipment shall measure only the leakage current associated with the cable under test and shall not include internal leakage of the test equipment.

(b) Record wet- and dry-bulb temperatures or relative humidity and temperature.

(c) Test each section of cable individually.

(d) Individually test each conductor with all other conductors grounded; Ground all shields.

(e) Terminations shall be properly corona-suppressed by guard ring, field reduction sphere, or other suitable methods as necessary.

(f) Ensure that the maximum test voltage does not exceed the limits for terminators specified in IEEE standard 48 or manufacturer's specifications.

(g) Apply the DC high-potential test in at least five equal increments until maximum test voltage is reached. No increment shall exceed the voltage rating of the cable. Record DC leakage current at each step after a constant stabilization time consistent with system charging current.

(h) Raise the conductor to the specified maximum test voltage and hold for fifteen (15) minutes. Record readings of leakage current at 30 seconds and one minute and at one-minute intervals thereafter. Provide a graphic plot of readings with leakage current (X axis) versus voltage (Y axis) at each increment.

(i) Reduce the conductor test potential to zero and measure residual voltage at discrete intervals.

(j) Apply grounds for a time period adequate to drain all insulation stored charge.

(k) When new cables are spliced into existing cables, the DC high-potential test shall be performed on the new cable prior to splicing. After test results are approved for new cable and the splice is completed, an insulation-resistance test and a shield-continuity test shall be performed on the length of new and existing cable including the splice. After a satisfactory insulation-resistance test, a DC high-potential test shall be performed on the completed cable system utilizing a test voltage 75 percent of new cable tested value.

3.2.1.3 Ground Rods

Perform ground resistance tests for ground rods before any wire is connected. Take measurements in normally dry weather, not less than 48 hours after rainfall. Ground resistance shall also be measured for each piece of equipment and medium voltage cable splice to the ground electrode. Use a portable ground testing megger in accordance with manufacturer's instructions to test each ground or group of grounds. The instrument shall be equipped with a meter reading directly in ohms or fractions thereof to indicate the ground value of the ground electrode under test.

3.2.2 Approval of Test Results

Medium voltage cable test results shall be approved by SOUTHNAVFACENGCOM (Code 074).

-- End of Section --

SECTION 16341N

SF6 INSULATED PAD-MOUNTED SWITCHGEAR
03/01

PART 1 GENERAL

1.1 REFERENCES

The publications listed below form a part of this specification to the extent referenced. The publications are referred to in the text by the basic designation only.

AMERICAN SOCIETY FOR TESTING AND MATERIALS (ASTM)

ASTM A167	(1999) Stainless and Heat-Resisting Chromium-Nickel Steel Plate, Sheet, and Strip
ASTM D2472	(2000) Sulfur Hexafluoride

EUROPEAN COMMITTEE FOR ELECTROTECHNICAL STANDARDIZATION (CENELEC)

EN 60265-1	(1998) High Voltage Switches for Rated Voltages Above 1 kV and Less Than 52 kV (IEC 60265-1 : 1998)

INSTITUTE OF ELECTRICAL AND ELECTRONICS ENGINEERS (IEEE)

IEEE 386	(1995) Separable Insulated Connector Systems for Power Distribution Systems Above 600 V (ANSI/IEEE)
IEEE C2	(1997) National Electrical Safety Code (ANSI/IEEE)
IEEE C37.60	(1981; R 1992) Overhead, Pad Mounted, Dry Vault, and Submersible Automatic Circuit Reclosers and Fault Interrupters for AC Systems (ANSI/IEEE)
IEEE C62.11	(1999) Metal-Oxide Surge Arresters for AC Power Circuits (> 1 kV) (ANSI/IEEE)

NATIONAL ELECTRICAL MANUFACTURERS ASSOCIATION (NEMA)

NEMA C37.72	(1987) Manually-Operated, Dead-Front Padmounted Switchgear with Load Interrupting Switches and Separable Connectors for Alternating-Current Systems
NEMA C57.12.28	(1999) Pad-Mounted Equipment - Enclosure Integrity (Revision of ANSI C57.12.28-88)

INTERNATIONAL ELECTRICAL TESTING ASSOCIATION (NETA)

NETA ATS	(1999) Electrical Power Distribution Equipment and Systems

NATIONAL FIRE PROTECTION ASSOCIATION (NFPA)

NFPA 70	(1999) National Electrical Code
NFPA 70B	(1998) Electrical Equipment Maintenance

UNDERWRITERS LABORATORIES (UL)

UL 467	(1993; R 1999, Bul. 2000) Grounding and Bonding Equipment

1.2 RELATED REQUIREMENTS

Section 16050N, "Basic Electrical Materials and Methods" and Section 16081N, "Apparatus Inspection and Testing," apply to this section, with the additions and modifications specified herein.

1.3 DEFINITIONS

1.3.1 Year 2000 Compliant

Year 2000 compliant - means computer controlled facility components that accurately process date and time data (including, but not limited to, calculating, comparing, and sequencing) from, into, and between the twentieth and twenty-first centuries, and the years 1999 and 2000 and leap year calculations.

1.3.2 Switched Way

A switched way is considered a three-phase circuit entrance to the bus through a switch. For single-phase switches, it is a single-phase entrance to the bus through a switch.

1.4 SUBMITTALS

Submit the following in accordance with Section 01330, "Submittal Procedures."

SD-02 Shop Drawings

Switchgear Drawings; G

SD-03 Product Data

SF6 Insulated Pad-mounted Switchgear; G

Insulated High-Voltage Connectors; G

Surge Arresters; G

Each submittal shall include data on switches and associated accessories. Each submittal shall include manufacturer's information for each component, device and accessory provided with the equipment.

SD-06 Test Reports

Acceptance Checks and Tests; G

SD-07 Certificates

Paint Coating System; G

SD-09 Manufacturer's Field Reports

Switchgear design and production tests; G

SD-10 Operation and Maintenance Data

SF6 Insulated Pad-mounted Switchgear, Data Package 5; G

Submit operation and maintenance data in accordance with Section 01781N, "Operation and Maintenance Data."

1.5 QUALITY ASSURANCE

1.5.1 Switchgear Drawings

Furnish drawings that include, but are not limited to, the following:

a. Overall dimensions, weights, plan view, and front view

b. Ratings

c. Single-line diagram.

1.5.2 Paint Coating System

Submit NEMA C57.12.28 ANSI C57.12.29 paint coating system performance requirement tests.

PART 2 PRODUCTS

2.1 SF6 INSULATED PAD-MOUNTED SWITCHGEAR

NEMA C37.72, EN 60265-1

2.1.1 Ratings and Test Requirements

The voltage rating of the switchgear shall be 27 kV. The corresponding ratings associated with the required switchgear voltage rating shall be as follows:

Rated Maximum Voltage, kV	27
Rated Withstand Impulse Voltage, kV BIL	125
Continuous and Load Interrupting Current, A	600
Short-Time Current, kA rms Sym	12
Short-Circuit interrupting Current, kA rms Sym	12

Switched ways shall be rated for the required continuous and load interrupting current.

2.1.2 Switchgear Construction

Switch contacts and cable entrance terminations shall be contained in an SF6 filled stainless steel tank. Switchgear shall be shipped factory filled

with SF6 gas conforming to ASTM D2472. Switchgear shall be configured with load interrupting switch. Switchgear shall have front accessible terminations suitable for cables entering from below with the manual operating provisions mounted on the rear. Switch contact positions for switched ways shall be visible through viewing windows in the SF6 tank located adjacent to the manual operating provisions. Provide gas pressure gage in viewable location from switch operating handle. Each switched way shall have provisions for grounding.

2.1.2.1 Pad-mounting Provisions

Provide enclosed switchgear suitable for installation on a concrete pad. Switchgear enclosure base shall be fabricated of ASTM A167 type 304 or 304L stainless steel. Enclosure base shall include any part of the switchgear enclosure that is within 3 inches of concrete pad. Paint coating system shall comply with NEMA C57.12.28ANSI C57.12.29 regardless of equipment material. Paint color shall coordinate with other equipment on LAFB.

2.1.3 Load Interrupting Switched Ways

Load interrupter switched ways shall provide three-pole switching.

2.1.4 Key Interlock

Provide key interlock system as indicated on the drawings.

2.1.5 Dead-Front High-Voltage Bushings

IEEE 386. 35 kV, 150 kV BIL. Provide 600 ampere one-piece deadbreak apparatus bushings for each switched way as indicated.

2.2 Insulated High-Voltage Connectors

IEEE 386. Provide corresponding connector for each switched way. Connectors shall have a steel reinforced hook-stick eye, grounding eye, test point, and arc-quenching contact material.

a. 600 Ampere deadbreak connector ratings: Voltage: 35 kV, 150 kV BIL. Short time rating: 40,000 rms symmetrical amperes. Connectors shall have 200 ampere bushing interface for surge arresters as indicated.

b. Provideone set of three grounding elbows and one set of three feed-thru inserts. Grounding elbows and feed-thru inserts shall be delivered to the Contracting Officer.

2.3 Surge Arresters

IEEE C62.11, rated27 kV, fully shielded, dead-front, metal-oxide-varistor, elbow type with resistance-graded gap, suitable for plugging into inserts. Provide arresters on switched ways as indicated.

2.4 SF6 Refill Cylinders

Provide two SF6 refill cylinders, minimum size of 6 pounds of SF6; include regulator, valves, and hose for connection to the fill valve of the switch.

2.5 SOURCE QUALITY CONTROL

2.5.1 Switchgear Design and Production Tests

Furnish reports which include results of design and production tests performed according to NEMA C37.72, EN 60265-1 and IEEE C37.60. Production tests shall be performed by the manufacturer on each switchgear assembly to ensure that design performance is maintained in production.

PART 3 EXECUTION

3.1 INSTALLATION

Electrical installations shall conform to IEEE C2, NFPA 70, and to the requirements specified herein.

3.2 GROUNDING

NFPA 70 and IEEE C2, except that grounds and grounding systems shall have a resistance to solid earth ground not exceeding 10 ohms. When work, in addition to that indicated or specified, is directed to obtain the specified ground resistance, the provision of the contract covering "Changes" shall apply.

3.2.1 Grounding Electrodes

Provide driven ground rods as specified in Section 16302N "Underground Transmission and Distribution." at each corner of switchgear pad.

3.2.2 Switchgear Grounding

Connect 4 #1/0 bare copper conductor ground loop, not less than 24 inches below grade, to the upper end of the ground rods by exothermic welds or compression connectors. Provide 4 #1/0 bare copper conductors connecting the switchgear grounding provisions to two different ground rods.

3.2.3 Connections

Make joints in grounding conductors and ground loop by exothermic weld. Exothermic welds and compression connectors shall be installed as specified in Section 16302N, "Underground Transmission and Distribution."

3.2.4 Grounding and Bonding Equipment

UL 467, except as indicated or specified otherwise.

3.3 FOUNDATION FOR EQUIPMENT AND ASSEMBLIES

Mount switch on concrete slab. Slab shall be at least 12 inches thick, reinforced with a 6 x 6 - W2.9 x W2.9 mesh, placed uniformly 4 inches from the top of the slab. Slab shall be placed on a 6 inch thick, well-compacted gravel base. Top of concrete slab shall be approximately 4 inches above finished grade. Edges above grade shall have 1/2 inch chamfer. Slab shall be of adequate size to project at least 8 inches beyond equipment.

Stub up conduits, with bushings, 2 inches into cable wells in the concrete pad. Coordinate dimensions of cable wells with switch cable training areas. Concrete work shall be as specified in Section 03300, "Cast-in-Place Concrete."

3.4 FIELD QUALITY CONTROL

3.4.1 Performance of Acceptance Checks and Tests

Perform in accordance with the manufacturer's recommendations, NFPA 70B, NETA ATS and referenced ANSI standards.

Include the following visual and mechanical inspections and electrical tests, performed in accordance with NETA ATS.

3.4.1.1 Switchgear

a. Visual and Mechanical Inspection

(1) Compare equipment nameplate information with specifications and approved shop drawings.

(2) Inspect physical and mechanical condition.

(3) Check for proper anchorage, alignment, required area clearances, and grounding.

(4) Perform mechanical operator tests in accordance with manufacturer's instructions.

(5) Verify that insulating SF6 gas pressure is correct.

(6) Inspect all indicating devices for proper operation.

b. Electrical Tests

(1) Perform contact-resistance tests.

(2) Perform insulation-resistance tests.

(3) Perform an over-potential test on each switched way pole with the switched way in the open position in accordance with the manufacturer's instructions.

3.4.1.2 Grounding System

a. Visual and Mechanical Inspection

Inspect ground system for compliance with contract plans and specifications.

b. Electrical Tests

Perform ground-impedance measurements utilizing the fall-of-potential method. On systems consisting of interconnected ground rods, perform tests after interconnections are complete. On systems consisting of a single ground rod perform tests before any wire is connected. Take measurements in normally dry weather, not less than 48 hours after rainfall. Use a portable ground testing megger in accordance with manufacturer's instructions to test each ground or group of grounds. The instrument shall be equipped with a meter reading directly in ohms or fractions thereof to indicate the ground value of the ground rod or

grounding systems under test.

Submit the measured ground resistance of each ground rod and grounding system, indicating the location of the rod and grounding system. Include the test method and test setup (i.e., pin location) used to determine ground resistance and soil conditions at the time the measurements were made.

3.4.2 Follow-Up Verification

Upon completion of acceptance checks and tests, the Contractor shall show by demonstration in service that devices are in good operating condition and properly performing the intended function. Test shall require each item to perform its function not less than three times. As an exception to requirements stated elsewhere in the contract, notify the Contracting Officer 5 working days in advance of the dates and times for checks and tests.

-- End of Section --

SECTION 16403A

MOTOR CONTROL CENTERS AND POWER CENTERS
08/95

PART 1 GENERAL

1.1 REFERENCES

The publications listed below form a part of this specification to the extent referenced. The publications are referred to in the text by basic designation only.

AMERICAN SOCIETY FOR TESTING AND MATERIALS (ASTM)

ASTM B 187	(1994) Copper Bar, Bus Bar, Rod and Shapes

ASME INTERNATIONAL (ASME)

ASME B1.1	(1989) Unified Inch Screw Threads (UN and UNR Thread Form)
ASME B1.20.1	(1983; R 1992) Pipe Threads, General Purpose (Inch)

INSTITUTE OF ELECTRICAL AND ELECTRONICS ENGINEERS (IEEE)

IEEE C12.11	(1987) Instrument Transformers for Revenue Metering, 10 kV BIL Through 350 kV (0.6 kV NSV Through 69 kV NSV)
IEEE C57.13	(1993) Instrument Transformers

NATIONAL ELECTRICAL MANUFACTURERS ASSOCIATION (NEMA)

NEMA AB 1	(1993) Molded Case Circuit Breakers and Molded Case Switches
NEMA ICS 1	(1993) Industrial Control and Systems
NEMA ICS 2	(1993) Industrial Control Devices, Controllers and Assemblies
NEMA ICS 4	(1993) Industrial Control and Systems Terminal Blocks
NEMA ICS 6	(1993) Industrial Control and Systems Enclosures
NEMA PB 1	(1990) Panelboards
NEMA ST 1	(1988) Specialty Transformers (Except General Purpose Type)

NATIONAL FIRE PROTECTION ASSOCIATION (NFPA)

NFPA 70	(1993) National Electrical Code

UNDERWRITERS LABORATORIES (UL)

UL 44	(1991; Rev thru Jan 1995) Rubber-Insulated Wires and Cables
UL 489	(1991; Rev thru Dec 1994) Molded Case Circuit Breakers and Circuit Breaker Enclosures
UL 845	(1995) Motor Control Centers
UL 1063	(1993; Rev thru Oct 1994) Machine-Tool Wires and Cables

1.2 SYSTEM DESCRIPTION

These specifications include the design, fabrication, assembly, wiring, testing, and delivery of the items of equipment and accessories and spare parts listed in the Schedule and shown on the drawings.

1.2.1 Rules

The equipment shall conform to the requirements of NFPA 70 unless more stringent requirements are indicated herein or shown. NEMA rated and UL listed equipment has been specified when available. Equipment must meet NEMA and UL construction and rating requirements as specified. No equivalent will be acceptable. The contractor shall immediately notify the Contracting Officer of any requirements of the specifications or contractor proposed materials or assemblies that do not comply with UL or NEMA. International Electrotechnical Commission (IEC) rated equipment will not be considered an acceptable alternative to specified NEMA ratings.

1.2.2 Coordination

The general arrangement of the motor control centers and panelboards is shown on the contract drawings. Any modifications of the equipment arrangement or device requirements as shown on the drawings shall be subject to the approval of the Contracting Officer. If any conflicts occur necessitating departures from the drawings, details of and reasons for departures shall be submitted and approved prior to implementing any change. All equipment shall be completely assembled at the factory. The motor control centers may be disassembled into sections, if necessary, for convenience of handling, shipping, and installation.

1.2.3 Standard Products

Material and equipment shall be standard products of a manufacturer regularly engaged in their manufacture and shall essentially duplicate items that have been in satisfactory use for at least 2 years prior to bid opening. All materials shall conform to the requirements of these specifications. Materials shall be of high quality, free from defects and imperfections, of recent manufacture, and of the classification and grades designated. All materials, supplies, and articles not manufactured by the Contractor shall be the products of other recognized reputable manufacturers. If the Contractor desires for any reason to deviate from the standards designated in these specifications, he shall, after award, submit a statement of the exact nature of the deviation, and shall submit, for the approval of the Contracting Officer, complete specifications for

the materials which he proposes to use.

1.2.4 Nameplates

Nameplates shall be made of laminated sheet plastic or of anodized aluminum approximately 4 millimeters (1/8 inch) thick, engraved to provide white letters on a black background. The nameplates shall be fastened to the panels in proper positions with anodized round-head screws. Lettering shall be minimum 15 millimeters (1/2 inch) high. Nameplate designations shall be in accordance with lists on the drawings, and as a minimum shall be provided for the following equipment:

a. Motor Control Centers

b. Individual items of equipment mounted in the Motor Control Centers

c. Panelboards

Equipment of the withdrawal type shall be provided with nameplates mounted on the removable equipment in locations visible when the equipment is in place.

1.3 SUBMITTALS

Government approval is required for submittals with a "G" designation; submittals not having a "G" designation are for information only. When used, a designation following the "G" designation identifies the office that will review the submittal for the Government. The following shall be submitted in accordance with Section 01330 SUBMITTAL PROCEDURES:

SD-02 Shop Drawings

Drawings
Shop Drawings

The Contractor shall, within 30 calendar days after date of award, submit for the approval of the Contracting Officer six (6) copies of outline drawings of all equipment to be furnished under this contract, together with weights and overall dimensions. Drawings shall show the general arrangement and overall dimensions of the motor control centers and panelboards. These drawings shall show space requirements, details of any floor supports to be embedded in concrete and provisions for conduits for external cables.

Motor Control Centers; G

The Contractor shall, within 30 calendar days after date of award, submit for the approval of the Contracting Officer six (6) copies of electrical equipment drawings. An individual wiring diagram for each motor control center shall be submitted. A single-line diagram, equipment list and nameplate schedule shall be provided for each motor control center.

Panelboards; G

The Contractor shall, within 30 calendar days after date of award, submit for the approval of the Contracting Officer six (6) copies of electrical equipment drawings. A single-line diagram,

equipment list and nameplate schedule shall be provided for each panelboard.

SD-03 Product Data

Equipment; G

The Contractor shall within 30 calendar days after date of award submit for approval six (6) copies of such descriptive cuts and information as are required to demonstrate fully that all parts of the equipment will conform to the requirements and intent of the specifications. Data shall include descriptive data showing typical construction of the types of equipment proposed, including the manufacturer's name, type of molded case circuit breakers or motor circuit protectors, performance capacities and other information pertaining to the equipment. Six (6) sets of characteristic curves of the individual breaker trip element shall be submitted.

Factory Tests

The Contractor shall submit, within a minimum of 14 days prior to the proposed date of tests, six (6) copies of manufacturer's routine factory test procedures and production line tests for all motor control centers and switchboards.

SD-06 Test Reports

Factory Tests

The Contractor shall submit six (6) complete reproducible copies of the factory inspection results and six (6) complete reproducible copies of the factory test results in booklet form, including all plotted data curves, all test conditions, a listing of test equipment complete with calibration certifications, and all measurements taken.

SD-07 Certificates

Motor Control Centers

The contractor shall submit certification of factory test reports. Certification shall be signed by official authorized to certify on behalf of the manufacturer, attesting that the motor control center meets the specified requirements. The statement must be dated after the award of this contract, must state the Contractors name and address, must name the project and location, and must list the specific requirements which are being certified.

SD-10 Operation and Maintenance Data

Submit operation and maintenance data in accordance with Section 01781N "Operation and Maintenance Data".

1.4 DELIVERY, STORAGE, AND HANDLING

The equipment shall be shipped as completely assembled and wired as feasible so as to require a minimum of installation work. Each shipping section shall be properly match marked to facilitate reassembly, and shall

be provided with removable lifting channels with eye bolts for attachment of crane slings to facilitate lifting and handling. Any relay or other device which cannot withstand the hazards of shipment when mounted in place on the equipment shall be carefully packed and shipped separately. These devices shall be marked with the number of the panel which they are to be mounted on and fully identified. All finished painted surfaces and metal work shall be wrapped suitably or otherwise protected from damage during shipment. All parts shall be prepared for shipment so that slings for handling may be attached readily while the parts are in a railway car or transport truck. All spare parts and accessories shall be carefully packaged and clearly marked.

1.5 MAINTENANCE

1.5.1 Accessories and Tools

A complete set of accessories and special tools unique to equipment provided and required for erecting, handling, dismantling, testing and maintaining the apparatus shall be furnished by the Contractor.

1.5.2 Spare Parts

Spare parts shall be furnished as specified below. All spare parts shall be of the same material and workmanship, shall meet the same requirements, and shall be interchangeable with the corresponding original parts furnished.

a. 2 - Fuses of each type and size.

b. 2 - Operating coils for each size ac contactor.

c. 2 - Complete sets of 3-pole stationary and moving contact assemblies for each size ac contactor.

d. 3 - Contactor overload relays of each type and rating, each relay with a complete set of contact blocks.

e. 1 - spare set of heater elements for each heater rating provided.

f. 2 - Indicating lamp assemblies of each type.

g. 1 - Control transformer of each type and rating.

h. 1 - Control relay of each type and rating.

i. 1 - Contactor auxiliary contact of each type.

j. 4 - Keys for motor control center door lock.

PART 2 PRODUCTS

2.1 CONNECTIONS

All bolts, studs, machine screws, nuts, and tapped holes shall be in accordance with ASME B1.1. The sizes and threads of all conduit and fittings, tubing and fittings, and connecting equipment shall be in accordance with ASME B1.20.1. All ferrous fasteners shall have rust-resistant finish and all bolts and screws shall be equipped with approved locking devices. Manufacturer's standard threads and construction

may be used on small items which, in the opinion of the Contracting Officer, are integrally replaceable, except that threads for external connections to these items shall meet the above requirements.

2.2 MOLDED CASE CIRCUIT BREAKERS

Molded case circuit breakers shall conform to the applicable requirements of NEMA AB 1 and UL 489. The circuit breakers shall be manually-operated, shall be quick-make, quick-break, common trip type, and shall be of automatic-trip type unless otherwise specified or indicated on the drawings. All poles of each breaker shall be operated simultaneously by means of a common handle. The operating handles shall clearly indicate whether the breakers are in "On," "Off," or "Tripped" position and shall have provisions for padlocking in the "Off" position. Personnel safety line terminal shields shall be provided for each breaker. The circuit breakers shall be products of only one manufacturer, and shall be interchangeable when of the same frame size.

2.2.1 Trip Units

Except as otherwise noted, the circuit breakers, of frame sizes and the trip unit ratings as shown on the drawings, shall be provided with combination thermal and instantaneous magnetic or solid state trip units. The Government reserves the right to change the indicated trip ratings, within frame limits, of the trip devices at the time the shop drawings are submitted for approval. The breaker trip units shall be interchangeable and the instantaneous magnetic trip units shall be adjustable on frame sizes larger than 150 amperes. Nonadjustable instantaneous magnetic trip units shall be set at approximately 10 times the continuous current ratings of the circuit breakers.

2.2.2 480-Volt AC Circuits

Circuit breakers for 480-volt or 277/480-volt ac circuits shall be rated 600 volts ac, and shall have an UL listed minimum interrupting capacity of 35,000 symmetrical amperes at 600 volts ac.

2.2.3 120/240-Volt AC Circuits

Circuit breakers for 120-volt ac circuits shall be rated not less than 120/240 or 240 volts ac, and shall have a UL listed minimum interrupting capacity of 10,000 symmetrical amperes.

2.3 WIRING

All control wire shall be stranded tinned copper switchboard wire with 600-volt flame-retardant insulation meeting UL 44 or Type MTW meeting UL 1063, and shall pass the VW-1 flame tests included in those standards. Hinge wire shall have Class K stranding. Current transformer secondary leads shall be not smaller than No. 10 AWG. The minimum size of control wire shall be No. 14 AWG. Power wiring for 480-volt circuits and below shall be of the same type as control wiring and the minimum size shall be No. 12 AWG. Special attention shall be given to wiring and terminal arrangement on the terminal blocks to permit the individual conductors of each external cable to be terminated on adjacent terminal points.

2.4 TERMINAL BLOCKS

Control circuit terminal blocks for control wiring shall be molded or

fabricated type with barriers, rated not less than 600 volts. The terminals shall be removable binding, fillister or washer head screw type, or of the stud type with contact and locking nuts. The terminals shall be not less than No. 10 in size and shall have sufficient length and space for connecting at least two indented terminals for 10 AWG conductors to each terminal. The terminal arrangement shall be subject to the approval of the Contracting Officer and not less than four (4) spare terminals or 10 percent, whichever is greater, shall be provided on each block or group of blocks. Modular, pull apart, terminal blocks will be acceptable provided they are of the channel or rail-mounted type. The Contractor shall submit data showing that the proposed alternate will accommodate the specified number of wires, are of adequate current-carrying capacity, and are constructed to assure positive contact between current-carrying parts.

2.4.1 Types of Terminal Blocks

2.4.1.1 Short-Circuiting Type

Short-circuiting type terminal blocks shall be furnished for all current transformer secondary leads and shall have provision for shorting together all leads from each current transformer without first opening any circuit. Terminal blocks shall meet the requirements of paragraph CONTROL CIRCUIT TERMINAL BLOCKS above.

2.4.1.2 Load Type

Load terminal blocks rated not less than 600 volts and of adequate capacity shall be provided for the conductors for NEMA Size 3 and smaller motor controllers and for other power circuits except those for feeder tap units. The terminals shall be of either the stud type with contact nuts and locking nuts or of the removable screw type, having length and space for at least two indented terminals of the size required on the conductors to be terminated. Conducting parts between connected terminals shall have adequate contact surface and cross-section to operate without overheating. Each connected terminal shall have the circuit designation or wire number placed on or near the terminal in permanent contrasting color.

2.4.2 Marking Strips

White or other light-colored plastic marking strips, fastened by screws to each terminal block, shall be provided for wire designations. The wire numbers shall be made with permanent ink. The marking strips shall be reversible to permit marking both sides, or two marking strips shall be furnished with each block. Marking strips shall accommodate the two sets of wire numbers. Each device to which a connection is made shall be assigned a device designation in accordance with NEMA ICS 1 and each device terminal to which a connection is made shall be marked with a distinct terminal marking corresponding to the wire designation used on the Contractor's schematic and connection diagrams. The wire (terminal point) designations used on the Contractor's wiring diagrams and printed on terminal block marking strips may be according to the Contractor's standard practice; however, additional wire and cable designations for identification of remote (external) circuits shall be provided for the Government's wire designations. Prints of drawings submitted for approval will be so marked and returned to the Contractor for addition of the designations to the terminal strips and tracings, along with any rearrangement of points required.

2.5 SPACE HEATERS

Space heaters shall be provided and shall be controlled using an adjustable 10 to 35 degree C (50 to 90 degree F) thermostat, magnetic contactor, and a molded-case circuit breaker and a 480-120 volt single-phase transformer. The space heaters shall be 250-watt, 240 volt strip elements operated at 120 volts and shall be wired to terminal blocks for connection to 120-volt single-phase power sources located external to the control centers. The contactors shall be open type, electrically-held, rated 30 amperes, 2-pole, with 120-volt ac coils.

2.6 MOTOR CONTROL CENTERS

Each motor control center shall be designed for operation on 480-volts ac, 3-phase, 60-Hz system, and the equipment shall conform to all the applicable requirements of NEMA ICS 1, NEMA ICS 2, NEMA ICS 4and NEMA ICS 6. Vertical sections and individual units shall be listed and labeled under UL 845 where ever possible. The motor control center shall be NEMA Class II, Type B, motor control centers in accordance with NEMA ICS 2.

2.6.1 Enclosures

Each motor control center shall consist of the required number of vertical sections of 90 inches nominal height, bolted together, with steel channel sills and suitable for mounting against a wall. Vertical section shall be 20 inches deep and buses, control wiring, control transformers, small power transformers, terminal blocks, line terminals, cable supports, and clamps shall be accessible from the front. Enclosure shall be NEMA Type 1 gasketed. The control centers shall be fabricated from smooth select steel sheets shaped and reinforced to form rigid free-standing structures. Metal thickness for enclosures shall be not less than specified in NEMA ICS 6 without exception. Vertical edges of sections exposed to view shall be so fabricated and bolted that the joints will not pass a 1/16 inch gage. Each structure shall be designed for addition of future sections required. Individual compartments shall be isolated from adjacent compartments.

2.6.1.1 Unit Compartments

Each operating unit shall contain equipment as shown on the drawings, mounted in an individual cell. The unit assembly, except main circuit breakers, panelboards and auxiliary control devices, shall be drawout type removed from the front, without rear access or disturbing other units in the control center assembly. All drawout type unit assemblies shall have positive guide rail system to ensure alignment of connection to vertical bus. Units shall be mechanically interlocked with the door to prevent removal while in the energized position. Each removable unit shall have provision for padlocking in a position in which it is disconnected from the vertical bus although not removed from the stationary structure. All ventilating openings shall be provided with corrosion-resistant insect-proof screens on the inside. Bus closing plugs shall be provided for all unused openings in vertical bus barriers.

2.6.1.2 Motor Control Center Doors and Covers

Each unit compartment, including blank compartments for future use, shall be provided with either a flange-formed or a rolled-edge door. Each door shall be mounted on fully-concealed or continuous full-length piano-type hinges and shall be provided with positive fasteners. Door sag shall be prevented by proper alignment of hinges made of sufficiently strong material. The door fastenings shall be so interlocked to prevent opening

when the equipment is energized. The external operating handle shall clearly indicate whether the equipment is in an "ON", "OFF" or "TRIPPED" position.

2.6.1.3 Horizontal Wireways

Structure shall have top and bottom horizontal wireways. Both horizontal wireways shall run the length of the structure. Cover plates shall be provided on the side of the assembly to permit extension of the horizontal bus and wireway when vertical sections are added.

2.6.1.4 Vertical Wireways

Vertical wireways shall be provided in all vertical sections accepting multiple plug-in components. Vertical wireways shall connect with horizontal wireways at the top and bottom and be a minimum 4 inches wide. Doors shall be provided on each vertical wireway. The exposed surface of any door shall not deviate more than 1/16 inch from a true plane.

2.6.1.5 Sills

Channel iron foundations, complete with bolts and drilled holes for grouting and anchoring to the floor, shall be furnished for the complete length (front and rear) of each motor control center assembly. The channels shall be designed for flat mounting and maximum channel depth shall be 60 millimeters (2-1/2 inches). Additional channel or substantial metal trim shall be provided flush with the end panels to completely enclose the bases across the ends of the equipment assemblies.

2.6.1.6 Shutters

Drawout units shall have shutters which close when the unit is withdrawn to isolate the vertical bus.

2.6.1.7 Thermostatically Controlled Strip Heaters

Thermostatically controlled strip heaters as specified in paragraph SPACE HEATERS shall be provided in all motor control centers.

2.6.2 Buses

All buses shall be of copper and shall be tin or silver-plated throughout. Copper bars and shapes for bus conductors shall conform to the applicable requirements of ASTM B 187. All splices for field assembly shall be bolted with at least two bolts and shall employ the use of "Belleville" washers in the connection. The bus ratings shall be based on a 65 degree Celsius maximum temperature rise in accordance with UL 845 requirements. Bus shall have a short-circuit current rating of not less than 65,000 RMS symmetrical amperes. All bus work shall be supported on wet process porcelain insulators, glass polyester, or suitable molded material.

2.6.2.1 Horizontal Bus

Each control center assembly shall be provided with a three-phase main horizontal bus, with a continuous current rating not less than 1,600 amperes, located across the top of each vertical section. The ends of horizontal buses shall be drilled for future extensions.

2.6.2.2 Vertical Bus

Each vertical section shall be provided with a three-phase vertical bus with a continuous current rating of 600 amperes connected to the horizontal bus by brazing, welding, or bolting. Where the incoming feeder breakers are located at the bottom of a control center, the vertical bus in that section shall be rated the same as the main horizontal bus. Vertical buses shall extend from the horizontal bus to the bottom of the lowest available unit mounting space. The vertical bus shall be isolated from wireways and equipment in compartments.

2.6.2.3 Ground Bus

A copper ground bus shall be provided full width at the bottom of the motor control center line-up. A full clamp-type solderless copper or copper alloy lug for No. 2/0 AWG stranded copper cable shall be provided at each end of the bus for connection to the station grounding system.

2.6.2.4 Neutral Bus

A half rated neutral bus shall be furnished continuous through the control center. Lugs of appropriate capacity will be furnished.

2.6.3 Combination Starters

Combination motor controller units shall contain motor circuit protectors or molded-case circuit breakers, auxiliary and pilot devices and a magnetic contactor with thermal overload relays. The ratings of motor circuit protectors, circuit breakers, contactors, motor controllers and other devices shall be as shown on the drawings. All combination motor controller units shall have short circuit ratings equal to 35 KAIC or greater. Where control push-buttons, indicating lamps, "Hand-Off-Automatic" switches, and similar control devices are associated with a unit, they shall be mounted on the unit compartment door. Door-mounted components shall not interfere with access within the compartments. Molded case circuit breakers for use in combination starters shall meet the requirements of paragraph MOLDED CASE CIRCUIT BREAKERS. Motor circuit protectors shall be only part of the combination starters as required by NFPA 70 and shall conform to all requirements of paragraph MOLDED CASE CIRCUIT BREAKERS, except that trip units shall have provision for locking the selected trip setting.

2.6.3.1 Magnetic Contactors

Magnetic contactors shall be of the NEMA sizes indicated on the drawings. The rating, performance and service characteristics shall conform to the requirements of NEMA ICS 2 for contactors with continuous current ratings for the duty indicated. Contactors for motor control shall be rated for full-voltage starting (Class A controllers). Contactors shall be suitable for at least 200,000 complete operations under rated load without more than routine maintenance. The interruption arc and flame shall be minimized by suitable arc chutes or other means so that no damage will be done to other portions of the device. The contacts shall be easily removable. All current-carrying contact surfaces shall be silver-surfaced or of other approved material to prevent the formation of high resistance oxides. The contactor shall operate without chatter or perceptible hum while energized. Coils shall be suitable for continuous operation 120-volt ac circuits. Alternating-current contactors shall be three-pole, except where otherwise noted, and shall be insulated for 600 volts ac and of the electrically-operated, magnetically-held type.

2.6.3.2 Auxiliary Contacts

Each controller shall be provided with a minimum of three auxiliary contacts.

2.6.3.3 Overload Relays

Except as otherwise indicated, each controller shall be provided three NEMA Class 20 thermal overload relays with external manual reset.

2.6.3.4 Individual Control Transformers

Where 120 volt ac control of contactors is indicated or required, individual control transformer shall be provided on the line side of the unit disconnect. The control transformers shall be rated 480-120 volts and shall conform to the requirements for control transformers in NEMA ST 1. Control transformers shall have adequate volt-ampere capacity for the control functions indicated. Transformers shall be installed with primary fuses. Each control transformer shall be provided with a fuse in one secondary lead and shall have the other secondary lead grounded.

2.6.3.5 Voltage Fault Protection

All combination starters shall be provided with protection against phase loss, undervoltage and overvoltage. Upon sensing one of these faults, the protector shall de-energize the starter. The protector shall use a combination of voltage and phase-angle sensing to detect phase loss even when regenerated voltages are present. The protector shall be connected to the load side of the motor circuit disconnect. The protector shall have an adjustable line voltage trip level, adjustable trip delay, automatic reset and manual reset by an external normally closed push-button, and two Double Pole Double Throw (DPDT) output contacts. Protector operation shall have repeatability of +/-1 percent of set point, maximum, and a dead band of 2 percent maximum. Protector shall have green indicator to show normal status and red indicator to show tripped status.

2.6.4 Molded Case Circuit Breakers in Unit Compartments

Molded case circuit breakers for installation in unit compartments shall meet the requirements of paragraph MOLDED CASE CIRCUIT BREAKERS above.

2.6.5 Wiring for Motor Control Centers

All wiring shall meet the requirements of paragraph WIRING above. Heavy-duty clamp type terminals shall be provided by the Contractor for terminating all power cables entering the control centers.

2.6.5.1 Contractor's Wiring

The Contractor's wiring shall be formed into groups, suitably bound together, properly supported and run straight horizontally or vertically. There shall be no splices in the wiring. The manufacturer's standard pressure-type wire terminations for connections to internal devices will be acceptable. Terminal blocks shall be added for wiring to devices having leads instead of terminals. Ring tongue indented terminals shall be used on all wires terminated on control terminal blocks for external or interpanel connections and at shipping splits. All stud terminals shall have contact nuts and either locking nuts or lockwashers.

2.6.5.2 External Connections

Power and control cables will enter the control centers at the bottom or top of the structures.

2.6.5.3 Terminal Blocks

Terminal blocks shall meet the requirements of paragraph TERMINAL BLOCKS above. In no case shall the terminals provided for circuit breakers or contactors accommodate less than the number or size of conductors shown on the drawings. Special attention shall be given to wiring and terminal arrangement on the terminal blocks to permit the individual conductors of each external cable to be terminated on adjacent terminal points.

2.6.6 Accessories and Control Devices

Control accessories shall be provided, and shall be suitable for mounting on the front of, or inside, the control centers as indicated on the drawings. Control accessories shall meet the applicable requirements of NEMA ICS 2. Relays and other equipment shall be so mounted that mechanical vibration will not cause false operation.

2.6.6.1 LED Indicating Lights

Red and green LED's shall be furnished where shown on the drawings, indicating contact "open" and "closed" position. The LED's shall be accessible and replaceable from the front of the control center through a finished opening in the compartment door. The LED assemblies shall be of the heavy duty oiltight, watertight, and dusttight type.

2.6.6.2 Control Relays

Control relays shall be of the electrically operated, magnetically held, self-reset, open type, suitable for mounting inside the starter compartments, and shall be 120-volt ac. Contacts shall be as indicated on the drawings and shall have a contact rating designation of A600 or N600, as required, in accordance with NEMA ICS 2.

2.6.7 Metering Section

Metering section shall be provided with instruments as indicated on the drawings.

2.6.7.1 Instrument Transformers

All transformers used for metering shall meet the requirements of IEEE C12.11 and IEEE C57.13. Voltage transformers shall be protected with removable primary and secondary fuses. Fuses shall be installed in each ungrounded lead and located adjacent to the transformers in an easily accessible place. If cable connections to current transformer primary are required, terminals of an approved solderless type and proper size shall be furnished. If current transformers are connected to buses, proper connections shall be furnished, complete with bolts, nuts, washers and other accessories.

2.6.7.2 Metering Device

A microprocessor based metering device shall be provided. Metering device

shall be capable of simultaneously displaying current, voltage and frequency on three seperate LED displays. Device shall be compact, door mounted and shall not require potential transformers for MCC voltages under 600V. Seperate step buttons shall be provided for current and voltage that shall allow the operator to view each phase of current and each phase-to-phase and phase-to-neutral voltage combination. Device shall indicate which values are currently on display. AC Ampere accuracy shall be +/-1%. AC voltage accuracy shall be +/-1%. Frequency accuracy shall be +/-0.5%. Device shall be UL listed and shall meet ANSI standard C37.90.1 for surge withstand.

2.7 Power Centers

The Contractor shall furnish and install individually mounted mini-power centers of the two-winding type, self-cooled, as specifed herein and as shown on the contract drawings. kVA and voltage ratins shall be as shown on the drawings. Units shall be designed for continuous operation at rated kVA, for 24 hours a day, 365 days a year operation, with normal life expectancy as defined in ANSI C57.96.

a. Transformer sound levels shall not exceed the following ANSI and NEMA levels for self-cooled ratings:

   Up to 90 kVA 40 db
   10 to 30 kVA 45 db

b. Construction

   1. Each mini-power center shall include a main primary breaker, an encapsulated dry-type transformer and a secondary panelboard with main breaker.

   2. Main primary, secondary and feeder breakers shall be enclosed with a padlockable hinged door.

   3. Transformers shall be insulated with a 185 degrees C insulation system. Required performance shall be obtained without exceeding the above indicated temperature rise in a 40 degrees C maximum ambient, with a 30 degrees C average over 24 hours. All insulation materials shall be flame-retardant and shall not support combustion as defined in ASTM Standard Test Method D635.

   4. Transformer core shall be constructed with high-grade, nonaging, grain-oriented silicon steel with high magnetic permeability, adn low hysteresis and eddy current losses. The transformer core volume shall allow efficient transfomrer operation at 10% above the nominal tap voltage. The core laminations shall be tightly clamped and compressed. Coils shall be wound of electrical grade aluminum with continuous wound construction. The core and coil assembly shall be completely encapsulated in a proportioned mixture of resin and aggregate to provide a moistureproof, shock-resistant seal. The core and coil encapsulation system shall minimize the sound level. The core of the transformer shall be grounded to the enclosure.

   5. Provide two (2) 5 percent FCBN taps.

c. Secondary bus shall be aluminum.

d. All interconnecting wiring between teh primary breaker and transformer, secondary main breaker and transformer and distribution section shall be factory installed.

e. All transformers shall be equipped with a wiring compartment suitable for conduit entry and large enough to allow convenient wiring.

f. Each power center shall include a main primary breaker with an interrupting rating of 14 kA at 277/480 volts; and a secondary panelboard with main breaker rated 10 kA interrupting rating at 120/240 volts.

g. The secondary distribution section shall accommodate 1 inch, plug-in breakers with 10 kA interrupting capacity.

h. The enclosure shall be made of heavy-gauge steel and the maximum temperature of the enclosure shall not exceed 90 degrees C.

i. The enclosure shall be totally enclosed, nonventilated, NEMA 3R, with lifting eyes.

2.8 PAINTING

Interior and exterior steel surfaces of equipment enclosures shall be thoroughly cleaned and then receive a rust-inhibitive phosphatizing or equivalent treatment prior to painting. Exterior surfaces shall be free from holes, seams, dents, weld marks, loose scale or other imperfections. Interior surfaces shall receive not less than one coat of corrosion-resisting paint in accordance with the manufacturer's standard practice. Exterior surfaces shall be primed, filled where necessary, and given not less than two coats baked enamel with semigloss finish. Equipment located indoors shall be ANSI Light Gray. All touch-up work shall be done with manufacturer's coatings as supplied under paragraph SPARE PARTS.

2.9 FACTORY TESTS

Each item of equipment supplied under this contract shall be given the manufacturer's routine factory tests and tests as specified below, to insure successful operation of all parts of the assemblies. All tests required herein shall be witnessed by the Contracting Officer unless waived in writing, and no equipment shall be shipped until it has been approved for shipment by the Contracting Officer. The Contractor shall notify the Contracting Officer a minimum of 14 days prior to the proposed date of the tests so that arrangements can be made for the Contracting Officer to be present at the tests. The factory test equipment and the test methods used shall conform to the applicable NEMA Standards, and shall be subject to the approval of the Contracting Officer. Reports of all witnessed tests shall be signed by witnessing representatives of the Contractor and Contracting Officer. The cost of performing all tests shall be borne by the Contractor and shall be included in the prices bid in the schedule for equipment.

2.9.1 Motor Control Centers Tests

2.9.1.1 Dielectric Tests

Each motor control center shall be completely assembled and given dielectric tests in accordance with NEMA ICS 1.

2.9.1.2 Operational Tests

The correctness of operation of each air circuit breaker or motor circuit protector and magnetic contactor and of all control devices, accessories and indicating lamps, shall be checked. These checks shall be made at rated voltage with power supplies to the main buses. All magnetic contactors shall also be checked for proper operation with power at 90 percent of rated voltage.

2.9.2 Panelboards Tests

Each panelboard shall be assembled with cabinet and front to the extent necessary to check the fit and provisions for installing all parts in the field. Each panelboard shall be given a dielectric test in accordance with NEMA PB 1. All circuit breakers shall be operated to check mechanical adjustments. All doors and locks shall be checked for door clearances and fits and the performance of lock and latches.

PART 3 EXECUTION (Not Applicable)

-- End of Section --

SECTION 16410A

AUTOMATIC TRANSFER SWITCH AND BY-PASS/ISOLATION SWITCH
07/01

PART 1 GENERAL

1.1 REFERENCES

The publications listed below form a part of this specification to the extent referenced. The publications are referred to in the text by basic designation only.

INSTITUTE OF ELECTRICAL AND ELECTRONICS ENGINEERS (IEEE)

IEEE C37.13	(1990; R 1995) Low-Voltage AC Power Circuit Breakers Used in Enclosures
IEEE C37.90.1	(1989; R 1994) IEEE Standard Surge Withstand Capability (SWC) Tests for Protective Relays and Relay Systems
IEEE C62.41	(1991; R 1995) Surge Voltages in Low-Voltage AC Power Circuits
IEEE Std 602	(1996) Electric Systems in Health Care Facilities

NATIONAL ELECTRICAL MANUFACTURERS ASSOCIATION (NEMA)

NEMA ICS 1	(1993) Industrial Controls and Systems
NEMA ICS 2	(1993) Industrial Controls and Systems Controllers, Contactors, and Overload Relays Rated Not More Than 2,000 Volts AC or 750 Volts DC
NEMA ICS 4	(1997) Industrial Control and Systems Terminal Blocks
NEMA ICS 6	(1993) Industrial Control and Systems, Enclosures
NEMA ICS 10	(1999) Industrial Control and Systems: AC Transfer Switch Equipment - Part 2: Static AC Transfer Equipment

NATIONAL FIRE PROTECTION ASSOCIATION (NFPA)

NFPA 70	(1999) National Electrical Code
NFPA 110	(1999) Emergency and Standby Power Systems

UNDERWRITERS LABORATORIES (UL)

UL 1008	(1996; Rev thru Feb 1999) Transfer Switch Equipment

UL 1066 (1997) Low-Voltage AC and DC Power Circuit Breakers Used in Enclosures

1.2 SUBMITTALS

Government approval is required for submittals with a "G" designation; submittals not having a "G" designation are for information only. When used, a designation following the "G" designation identifies the office that will review the submittal for the Government. The following shall be submitted in accordance with Section 01330 SUBMITTAL PROCEDURES:

SD-02 Shop Drawings

Switches; G

Schematic, external connection, one-line schematic and wiring diagram of each ATS assembly. Interface equipment connection diagram showing conduit and wiring between ATS and related equipment. Device, nameplate, and item numbers shown in list of equipment and material shall appear on drawings wherever that item appears. Diagrams shall show interlocking provisions and cautionary notes, if any. Operating instructions shall be shown either on one-line diagram or separately. Unless otherwise approved, one-line and elementary or schematic diagrams shall appear on same drawing.

Equipment; G
Installation; G

Dimensioned plans, sections and elevations showing minimum clearances, weights, and conduit entry provisions for each ATS.

SD-03 Product Data

Material;
Equipment;

List of proposed equipment and material, containing a description of each separate item.

SD-06 Test Reports

Testing; G

A description of proposed field test procedures, including proposed date and steps describing each test, its duration and expected results, not less than 2 weeks prior to test date.

Certified factory and field test reports, within 14 days following completion of tests. Reports shall be certified and dated and shall demonstrate that tests were successfully completed prior to shipment of equipment.

SD-07 Certificates

Equipment; G
Material; G

Certificates of compliance showing evidence of UL listing and conformance with applicable NEMA standards. Such certificates are not required if manufacturer's published data, submitted and approved, reflect UL listing or conformance with applicable NEMA standards.

Switching Equipment; G

Evidence that ATS withstand current rating (WCR) has been coordinated with upstream protective devices as required by UL 1008. Upon request, manufacturer shall also provide notarized letter certifying compliance with requirements of this specification, including withstand current rating.

SD-10 Operation and Maintenance Data

Switching Equipment; G
Instructions; G

Six copies of operating manual outlining step-by-step procedures for system startup, operation, and shutdown. Manual shall include manufacturer's name, model number, service manual, parts list, and brief description of equipment and basic operating features. Manufacturer's spare parts data shall be included with supply source and current cost of recommended spare parts. Six copies of maintenance manual listing routine maintenance, possible breakdowns, repairs, and troubleshooting guide. Manual shall include simplified wiring and control diagrams for system as installed.

1.3 GENERAL REQUIREMENTS

1.3.1 Standard Product

Material and equipment shall be standard products of a manufacturer regularly engaged in manufacturing the products and shall essentially duplicate items that have been in satisfactory use for at least 2 years prior to bid opening. The experience use shall include applications in similar circumstances and of same design and rating as specified ATS. Equipment shall be capable of being serviced by a manufacturer-authorized and trained organization that is, in the Contracting Officer's opinion, reasonably convenient to the site.

1.3.2 Nameplate

Nameplate showing manufacturer's name and equipment ratings shall be made of corrosion-resistant material with not less than 1/8 inch tall characters. Nameplate shall be mounted to front of enclosure and shall comply with nameplate requirements of NEMA ICS 2.

1.4 SERVICE CONDITIONS

Seismic requirements shall be as specified in Sections 13080 SEISMIC PROTECTION FOR MISCELLANEOUS EQUIPMENT, 15070 SEISMIC PROTECTION FOR MECHANICAL EQUIPMENT and 16070 SEISMIC PROTECTION FOR ELECTRICAL EQUIPMENT as indicated. ATS shall be suitable for prolonged performance under following service conditions:

a. Altitude: 50 feet above mean sea level.

b. Relative Humidity: 95 percent maximum, continuous.

c. Temperature: Minus 5 to 40 degrees F.

d. Seismic Parameters: 2.

PART 2 PRODUCTS

2.1 AUTOMATIC TRANSFER SWITCH (ATS)

ATS shall be electrically operated and mechanically held in both operating positions. ATS shall be suitable for use in emergency systems described in NFPA 70. ATS shall be UL listed. ATS shall be manufactured and tested in accordance with applicable requirements of IEEE C37.90.1, IEEE C37.13, IEEE C62.41, IEEE Std 602, NEMA ICS 1, NEMA ICS 2, NEMA ICS 10, UL 1008 and UL 1066. ATS shall conform to NFPA 110. To facilitate maintenance, manufacturer's instruction manual shall provide typical maximum contact voltage drop readings under specified conditions for use during periodic maintenance. Manufacturer shall provide instructions for determination of contact integrity. ATS shall be rated for continuous duty at specified continuous current rating. ATS shall be fully compatible and approved for use with BP/IS specified. BP/IS shall be considered part of ATS system. ATS shall have following characteristics:

a. Voltage: 480 volts ac.

b. Number of Phases: Three.

c. Number of Wires: Four.

d. Frequency: 60 Hz.

e. Poles: Three switched and switched neutral.

f. ATS WCR: Rated to withstand short-circuit current of 85 amperes, RMS symmetrical.

g. Nonwelding Contacts: Rated for nonwelding of contacts when used with upstream feeder overcurrent devices shown and with available fault current specified.

h. Main and Neutral Contacts: Contacts shall have silver alloy composition. Neutral contacts shall have same continuous current rating as main or phase contacts.

2.1.1 Override Time Delay

Time delay to override monitored source deviation shall be adjustable from 0.5 to 6 seconds and factory set at 1 second. ATS shall monitor phase conductors to detect and respond to sustained voltage drop of 25 percent of nominal between any two normal source conductors and initiate transfer action to emergency source and start engine driven generator after set time period. Pickup voltage shall be adjustable from 85 to 100 percent of nominal and factory set at 90 percent. Dropout voltage shall be adjustable from 75 to 98 percent of pickup value and factory set at 85 percent of nominal.

2.1.2 Transfer Time Delay

Time delay before transfer to emergency power source shall be adjustable from 0 to 5 minutes and factory set at 0 minutes. ATS shall monitor frequency and voltage of emergency power source and transfer when frequency and voltage are stabilized. Pickup voltage shall be adjustable from 85 to 100 percent of nominal and factory set at 90 percent. Pickup frequency shall be adjustable from 90 to 100 percent of nominal and factory set at 90 percent.

2.1.3 Return Time Delay

Time delay before return transfer to normal power source shall be adjustable from 0 to 30 minutes and factory set at 30 minutes. Time delay shall be automatically defeated upon loss or sustained undervoltage of emergency power source, provided that normal supply has been restored.

2.1.4 Engine Shutdown Time Delay

Time delay shall be adjustable from 0 to 30 minutes and shall be factory set at 10 minutes.

2.1.5 Exerciser

Provide a generator exerciser timer. Run times shall be user programmable. The generator exerciser shall be selectable between load transfer and enginer run only, and shall have a fail-safe feature that will retransfer the ATS to normal during the exercise period.

2.1.6 Auxiliary Contacts

Two normally open and two normally closed auxiliary contacts rated at 10 amperes at 120 volts shall operate when ATS is connected to normal power source, and two normally open and two normally closed contacts shall operate when ATS is connected to emergency source.

2.1.7 Supplemental Features

ATS shall be furnished with the following:

a. Engine start contact.

b. Emergency source monitor.

c. Test switch to simulate normal power outage.

d. Voltage sensing. Pickup voltage adjustable from 85 to 100 percent of nominal; dropout adjustable from 75 to 98 percent of pickup.

e. Time delay bypass switch to override return time delay to normal.

f. Manual return-to-normal switch.

g. Means shall be provided in the ATS to insure that motor/transformer load inrush currents do not exceed normal starting currents. This shall be accomplished with a time-delay transition. If the manufacturer supplies a time-delay transition system, the manufacturer shall supply recommendations for establishing time delay. If load voltage decay sensing is supplied, the load voltage setting shall be user programmable.

2.1.8 Operator

Manual operator conforming to UL 1008 shall be provided, and shall incorporate features to prevent operation by unauthorized personnel. ATS shall be designed for safe manual operation under full load conditions. If manual operation is accomplished by opening the door, then a dead-front shall be supplied for operator safety.

2.1.9 Override Switch

Override switch shall bypass automatic transfer controls so ATS will transfer and remain connected to emergency power source, regardless of condition of normal source. If emergency source fails and normal source is available, ATS shall automatically retransfer to normal source.

2.1.10 Green Indicating Light

A green indicating light shall supervise/provide normal power source switch position indication and shall have a nameplate engraved NORMAL.

2.1.11 Red Indicating Light

A red indicating light shall supervise/provide emergency power source switch position indication and shall have a nameplate engraved EMERGENCY.

2.2 BY-PASS/ISOLATION SWITCH (BP/IS)

2.2.1 Design

Bypass/isolation switch (BP/IS) shall permit load by-pass to either normal or emergency power source and complete isolation of associated ATS, independent of ATS operating position. BP/IS and associated ATS shall be products of same manufacturer and shall be completely interconnected and tested at factory and at project site as specified. BP/IS shall be manufactured, listed, and tested in accordance with paragraph AUTOMATIC TRANSFER SWITCH (ATS) and shall have electrical ratings that exceed or equal comparable ratings specified for ATS. Operating handles shall be externally operated and arranged so that one person can perform the bypass and isolation functions through the operation of a maximum of two handles within 5 seconds. The ATS shall have provisions for locking in the isolation position. Handle for manual operation shall be permanently attached to operating mechanism. BP/IS operation shall be accomplished without disconnecting switch load terminal conductors. Isolation handle positions shall be marked with engraved plates or other approved means to indicate position or operating condition of associated ATS, as follows:

a. Indication shall be provided to show that ATS section is providing power to the load.

b. Indication shall be provided of ATS isolation. The ATS controls shall remain functional with the ATS isolated or in bypass mode to permit monitoring of the normal power source and automatic starting of the generator in the event of a loss of the normal power source. In the isolated mode, the bypass section shall be capable of functioning as a manual transfer switch to transfer the load to either power source. The ATS shall be capable of undergoing functional operation testing without service interruption. The ATS may also be completely removed from the

enclosure, if required for maintenance or repair, while the bypass section continues to power the load.

2.2.2 Switch Construction

Bypass/isolation switch shall be constructed for convenient removal of parts from front of switch enclosure without removal of other parts or disconnection of external power conductors. Contacts shall be as specified for associated ATS, including provisions for inspection of contacts without disassembly of BP/IS or removal of entire contact enclosure. To facilitate maintenance, manufacturer shall provide instructions for determination of contact integrity. BP/IS and associated ATS shall be interconnected with suitably sized copper bus bars silver-plated at each connection point, and braced to withstand magnetic and thermal forces created at WCR specified for associated ATS.

2.2.3 Viewing Ports

ATS and BP/IS switches shall be of draw-out construction. Viewing ports to inspect the contacts without requiring disassembly shall be provided.

2.2.4 Operating Handles

The operating handles shall be externally operated, and designed and constructed not to stop in an intermediate or neutral position during operation, but shall permit load by-pass and transfer switch isolation in no more than two manual operations which can be performed by one person in 5 seconds or less. The transfer speed will be independent of the operational speed of the switch handle or handles.

2.3 ENCLOSURE

ATS and accessories shall be installed in free-standing, unventilated NEMA ICS 6, Type 3R, smooth sheet metal enclosure constructed in accordance with applicable requirements of UL 1066 and/or UL 1008. Intake vent shall be screened and filtered. Exhaust vent shall be screened. Door shall have suitable hinges, locking handle latch, and gasketed jamb. Thermostatically controlled heater shall be provided within enclosure to prevent condensation over temperature range stipulated in paragraph SERVICE CONDITIONS. Metal gauge shall be not less than No. 14. Enclosure shall be equipped with at least two approved grounding lugs for grounding enclosure to facility ground system using No. 0 AWG copper conductors. Factory wiring within enclosure and field wiring terminating within enclosure shall comply with NFPA 70. If wiring is not color coded, wire shall be permanently tagged or marked near terminal at each end with wire number shown on approved detail drawing. Terminal block shall conform to NEMA ICS 4. Terminals shall be arranged for entrance of external conductors from top and bottom of enclosure as shown. Main switch terminals, including neutral terminal if used, shall be pressure type suitable for termination of external copper conductors shown.

2.3.1 Construction

Enclosure shall be constructed for ease of removal and replacement of ATS components and control devices from front without disconnection of external power conductors or removal or disassembly of major components. Enclosure of ATS with BP/IS shall be constructed to protect personnel from energized BP/IS components during ATS maintenance.

2.3.2 Cleaning and Painting

Both the inside and outside surfaces of an enclosure, including means for fastening, shall be protected against corrosion by enameling, galvanizing, plating, powder coating, or other equivalent means. Protection is not required for metal parts that are inherently resistant to corrosion, bearings, sliding surfaces of hinges, or other parts where such protection is impractical. Finish shall be manufacturer's standard material, process, and color and shall be free from runs, sags, peeling, or other defects.

2.4 TESTING

2.4.1 Factory Testing

A prototype of specified ATS shall be factory tested in accordance with UL 1008. In addition, factory tests shall be performed on each ATS as follows:

a. Insulation resistance test to ensure integrity and continuity of entire system.

b. Main switch contact resistance test.

c. Visual inspection to verify that each ATS is as specified.

d. Mechanical test to verify that ATS sections are free of mechanical hindrances.

e. Electrical tests to verify complete system electrical operation and to set up time delays and voltage sensing settings.

2.4.2 Factory Test Reports

Manufacturer shall provide three certified copies of factory test reports.

PART 3 EXECUTION

3.1 INSTALLATION

ATS shall be installed as shown and in accordance with approved manufacturer's instructions.

3.2 INSTRUCTIONS

Manufacturer's approved operating instructions shall be permanently secured to cabinet where operator can see them. One-line and elementary or schematic diagram shall be permanently secured to inside of front enclosure door.

3.3 SITE TESTING

Following completion of ATS installation and after making proper adjustments and settings, site tests shall be performed in accordance with manufacturer's written instructions to demonstrate that each ATS functions satisfactorily and as specified. Contractor shall advise Contracting Officer not less than 5 working days prior to scheduled date for site testing, and shall provide certified field test reports within 2 calendar weeks following successful completion of site tests. Test reports shall describe adjustments and settings made and site tests performed. Minimum operational tests shall include the following:

a. Insulation resistance shall be tested, both phase-to-phase and phase-to-ground.

b. Power failure of normal source shall be simulated by opening upstream protective device. This test shall be performed a minimum of five times.

c. Power failure of emergency source with normal source available shall be simulated by opening upstream protective device for emergency source. This test shall be performed a minimum of five times.

d. Low phase-to-ground voltage shall be simulated for each phase of normal source.

e. Operation and settings shall be verified for specified ATS features, such as override time delay, transfer time delay, return time delay, engine shutdown time delay, exerciser, auxiliary contacts, and supplemental features.

f. Manual and automatic ATS and BP/IS functions shall be verified.

-- End of Section --

SECTION 16415A

ELECTRICAL WORK, INTERIOR
08/96

PART 1 GENERAL

1.1 REFERENCES

The publications listed below form a part of this specification to the extent referenced. The publications are referred to in the text by basic designation only.

AMERICAN NATIONAL STANDARDS INSTITUTE (ANSI)

ANSI C39.1	(1981; R 1992) Requirements for Electrical Analog Indicating Instruments

AMERICAN SOCIETY FOR TESTING AND MATERIALS (ASTM)

ASTM D 709	(1992; R 1997) Laminated Thermosetting Materials

INSTITUTE OF ELECTRICAL AND ELECTRONICS ENGINEERS (IEEE)

IEEE C62.41	(1991; R 1995) Surge Voltages in Low-Voltage AC Power Circuits
IEEE Std 81	(1983) Guide for Measuring Earth Resistivity, Ground Impedance, and Earth Surface Potentials of a Ground System (Part 1)

NATIONAL ELECTRICAL MANUFACTURERS ASSOCIATION (NEMA)

NEMA AB 1	(1993) Molded Case Circuit Breakers and Molded Case Switches
NEMA ICS 6	(1993) Industrial Control and Systems Enclosures
NEMA OS 1	(1996) Sheet-Steel Outlet Boxes, Device Boxes, Covers, and Box Supports
NEMA OS 2	(1986; Errata Aug 1986; R 1991) Nonmetallic Outlet Boxes, Device Boxes, Covers and Box Supports
NEMA PB 1	(1995) Panelboards
NEMA RN 1	(1989) Polyvinyl-Chloride (PVC) Externally Coated Galvanized Rigid Steel Conduit and Intermediate Metal Conduit
NEMA ST 20	(1992) Dry-Type Transformers for General Applications

NEMA TC 2	(1990) Electrical Polyvinyl Chloride (PVC) Tubing (EPT) and Conduit (EPC-40 and EPC-80)
NEMA TC 13	(1993) Electrical Nonmetallic Tubing (ENT)
NEMA WD 1	(1983; R 1989) General Requirements for Wiring Devices
NEMA WD 6	(1988) Wiring Devices - Dimensional Requirements

NATIONAL FIRE PROTECTION ASSOCIATION (NFPA)

NFPA 70	(1999) National Electrical Code
NFPA 101	(1997; Errata 97-1; TIA 97-1) Life Safety Code

UNDERWRITERS LABORATORIES (UL)

UL 1	(1993; Rev thru Jan 1995) Flexible Metal Conduit
UL 5	(1996) Surface Metal Raceways and Fittings
UL 6	(1997) Rigid Metal Conduit
UL 20	(1995; Rev thru Oct 1998) General-Use Snap Switches
UL 67	(1993; Rev thru Nov 1995) Panelboards
UL 98	(1994; R thru Jun 1998) Enclosed and Dead-Front Switches
UL 198C	(1986; Rev thru Feb 1998) High-Interrupting-Capacity Fuses, Current-Limiting Types
UL 198E	(1988; Rev Jul 1988) Class R Fuses
UL 198H	(1988; Rev thru Nov 1993) Class T Fuses
UL 360	(1996; Rev thru Oct 1997) Liquid-Tight Flexible Steel Conduit
UL 467	(1993; Rev thru Aug 1996) Grounding and Bonding Equipment
UL 486A	(1997; Rev thru Dec 1998) Wire Connectors and Soldering Lugs for Use with Copper Conductors
UL 486E	(1994; Rev thru Feb 1997) Equipment Wiring Terminals for Use with Aluminum and/or Copper Conductors
UL 489	(1996; Rev thru Dec 1998) Molded-Case

	Circuit Breakers, Molded-Case Switches, and Circuit-Breaker Enclosures
UL 498	(1996; Rev thru Sep 1998) Attachment Plugs and Receptacles
UL 506	(1994; Rev Oct 1997) Specialty Transformers
UL 510	(1994; Rev thru Apr 1998) Polyvinyl Chloride, Polyethylene, and Rubber Insulating Tape
UL 512	(1993; R Dec 1995) Fuseholders
UL 514A	(1996; Rev Jul 1998) Metallic Outlet Boxes
UL 514B	(1997; Rev Oct 1998) Fittings for Cable and Conduit
UL 514C	(1996; R Sep 1998) Nonmetallic Outlet Boxes, Flush-Device Boxes, and Covers
UL 651	(1995; Rev thru Oct 1998) Schedule 40 and 80 Rigid PVC Conduit
UL 651A	(1995; Rev thru Apr 1998) Type EB and A Rigid PVC Conduit and HDPE Conduit
UL 797	(1993; Rev thru Mar 1997) Electrical Metallic Tubing
UL 943	(1993; Rev thru May 1998)Ground-Fault Circuit-Interrupters
UL 1449	(1996; Rev thru Oct 1998) Transient Voltage Surge Suppressors
UL 1660	(1994; Rev Apr 1998) Liquid-Tight Flexible Nonmetallic Conduit
UL Elec Const Dir	(1998) Electrical Construction Equipment Directory

1.2 GENERAL

1.2.1 Rules

The installation shall conform to the requirements of NFPA 70 and NFPA 101, unless more stringent requirements are indicated or shown.

1.2.2 Coordination

The drawings indicate the extent and the general location and arrangement of equipment, conduit, and wiring. The Contractor shall become familiar with all details of the work and verify all dimensions in the field so that the outlets and equipment shall be properly located and readily accessible. Lighting fixtures, outlets, and other equipment and materials shall be carefully coordinated with mechanical or structural features prior to installation and positioned according to architectural reflected ceiling

plans; otherwise, lighting fixtures shall be symmetrically located according to the room arrangement when uniform illumination is required, or asymmetrically located to suit conditions fixed by design and shown. Raceways, junction and outlet boxes, and lighting fixtures shall not be supported from sheet metal roof decks. If any conflicts occur necessitating departures from the drawings, details of and reasons for departures shall be submitted and approved prior to implementing any change. The Contractor shall coordinate the electrical requirements of the mechanical work and provide all power related circuits, wiring, hardware and structural support, even if not shown on the drawings.

1.2.3 Special Environments

1.2.3.1 Weatherproof Locations

Wiring, Fixtures, and equipment in designated locations shall conform to NFPA 70 requirements for installation in damp or wet locations.

1.2.4 Standard Products

Material and equipment shall be a standard product of a manufacturer regularly engaged in the manufacture of the product and shall essentially duplicate items that have been in satisfactory use for at least 2 years prior to bid opening.

1.2.5 Nameplates

1.2.5.1 Identification Nameplates

Major items of electrical equipment and major components shall be permanently marked with an identification name to identify the equipment by type or function and specific unit number as indicated. Designation of motors shall coincide with their designation in the motor control center or panel. Unless otherwise specified, identification nameplates shall be made of laminated plastic in accordance with ASTM D 709 with black outer layers and a white core. Edges shall be chamfered. Plates shall be fastened with black-finished round-head drive screws, except motors, or approved nonadhesive metal fasteners. When the nameplate is to be installed on an irregular-shaped object, the Contractor shall devise an approved support suitable for the application and ensure the proper installation of the supports and nameplates. In all instances, the nameplate shall be installed in a conspicuous location. The front of each panelboard and motor control center shall have a nameplate to indicate the phase letter, corresponding color and arrangement of the phase conductors. The following equipment, as a minimum, shall be provided with identification nameplates:

Minimum 1/4 inch High Letters	Minimum 1/8 inch High Letters
Panelboards	Control Power Transformers
Starters	Control Devices
Safety Switches	Instrument Transformers
Motor Control Centers	
Transformers	
Equipment Enclosures	
Motors	

Each panel, section, or unit in motor control centers, switchgear or

similar assemblies shall be provided with a nameplate in addition to nameplates listed above, which shall be provided for individual compartments in the respective assembly, including nameplates which identify "future," "spare," and "dedicated" or "equipped spaces."

1.2.6 As-Built Drawings

Following the project completion or turnover, within 30 days the Contractor shall furnish 2 sets of as-built drawings to the Contracting Officer.

1.3 SUBMITTALS

Government approval is required for submittals with a "G" designation; submittals not having a "G" designation are for information only. When used, a designation following the "G" designation identifies the office that will review the submittal for the Government. The following shall be submitted in accordance with Section 01330 SUBMITTAL PROCEDURES:

SD-02 Shop Drawings

Interior Electrical Equipment;

Detail drawings consisting of equipment drawings, illustrations, schedules, instructions, diagrams, and other information necessary to define the installation. Detail drawings shall show the rating of items and systems and how the components of an item and system are assembled, function together, and how they will be installed on the project. Data and drawings for component parts of an item or system shall be coordinated and submitted as a unit. Data and drawings shall be coordinated and included in a single submission. Multiple submissions for the same equipment or system are not acceptable except where prior approval has been obtained from the Contracting Officer. In such cases, a list of data to be submitted later shall be included with the first submission. Detail drawings shall show physical arrangement, construction details, connections, finishes, materials used in fabrication, provisions for conduit or busway entrance, access requirements for installation and maintenance, physical size, electrical characteristics, foundation and support details, and equipment weight. Drawings shall be drawn to scale and/or dimensioned. Optional items shall be clearly identified as included or excluded. Detail drawings shall as a minimum include:

a. Transformers and power centers.

b. Programmable logic controllers

c. Human Machine Interfaces (HMI)

d. Equipment Control Panels

e. Transient Voltage Surge Supression (TVSS)

f. Automatic Control Devices and Sensors

g. Single line electrical diagrams including primary, metering, sensing and relaying, control wiring, and control logic.

SD-03 Product Data

Manufacturer's Catalog;

Data composed of catalog cuts, brochures, circulars, specifications, product data, and printed information in sufficient detail and scope to verify compliance with the requirements of the contract documents.

Material, Equipment, and Fixture Lists;

A complete itemized listing of equipment and materials proposed for incorporation into the work. Each entry shall include an item number, the quantity of items proposed, and the name of the manufacturer of each item.

Installation Procedures;

Installation procedures for rotating equipment, transformers, switchgear, battery systems, voltage regulators, and grounding resistors. Procedures shall include diagrams, instructions, and precautions required to install, adjust, calibrate, and test devices and equipment.

As-Built Drawings;

The as-built drawings shall be a record of the construction as installed. The drawings shall include all the information shown on the contract drawings, deviations, modifications, and changes from the contract drawings, however minor. The as-built drawings shall be kept at the job site and updated daily. The as-built drawings shall be a full-sized set of prints marked to reflect all deviations, changes, and modifications. The as-built drawings shall be complete and show the location, size, dimensions, part identification, and other information. Additional sheets may be added. The as-built drawings shall be jointly inspected for accuracy and completeness by the Contractor's quality control representative and by the Contracting Officer prior to the submission of each monthly pay estimate. Upon completion of the work, the Contractor shall submit three full sized sets of the marked prints to the Contracting Officer for approval. If upon review, the as-built drawings are found to contain errors and/or omissions, they will be returned to the Contractor for correction. The Contractor shall correct and return the as-built drawings to the Contracting Officer for approval within ten calendar days from the time the drawings are returned to the Contractor.

Onsite Tests; G.

A detailed description of the Contractor's proposed procedures for on-site tests.

SD-06 Test Reports

Factory Test Reports; G.

a. A list of equipment used, with calibration certifications.

b. A copy of measurements taken.

c. The dates of testing.

d. The equipment and values to be verified.

e. The conditions specified for the test.

f. The test results, signed and dated.

g. A description of adjustments made.

Field Test Plan; G.

A detailed description of the Contractor's proposed procedures for onsite test submitted 30 days prior to testing the installed system. No field test will be performed until the test plan is approved. The test plan shall consist of complete field test procedures including tests to be performed, test equipment required, and tolerance limits.

Field Test Reports; G.

a. A list of equipment used, with calibration certifications.

b. A copy of measurements taken.

c. The dates of testing.

d. The equipment and values to be verified.

e. The conditions specified for the test.

f. The test results, signed and dated.

g. A description of adjustments made.

h. Final position of controls and device settings.

SD-07 Certificates

Materials and Equipment;

The label or listing of the Underwriters Laboratories, Inc., will be accepted as evidence that the materials or equipment conform to the applicable standards of that agency.

SD-10 Operation and Maintenance Data

Operation and Maintenance Data;

Submit operation and maintenance data in accordance with Section 01781N, "Operation and Maintenance Data".

1.4 WORKMANSHIP

Materials and equipment shall be installed in accordance with NFPA 70, recommendations of the manufacturer, and as shown.

PART 2 PRODUCTS

Products shall conform to the respective publications and other requirements specified below. Materials and equipment not listed below shall be as specified elsewhere in this section. Items of the same classification shall be identical including equipment, assemblies, parts, and components.

2.1 TRANSIENT VOLTAGE SURGE PROTECTION

Transient voltage surge suppressors shall be provided as indicated. Surge suppressors shall meet the requirements of IEEE C62.41 and be UL listed and labeled as having been tested in accordance with UL 1449. Surge suppressor ratings shall be 480 volts rms, operating voltage; 60 Hz; 3-phase; 4 wire with ground surge current of 100 kA per phase. Fuses shall not be used as surge suppression.

2.2 CIRCUIT BREAKERS

2.2.1 MOLDED-CASE CIRCUIT BREAKERS

Molded-case circuit breakers shall conform to NEMA AB 1 and UL 489. Circuit breakers may be installed in panelboards, enclosures, motor control centers, or combination motor controllers.

2.2.1.1 Construction

Circuit breakers shall be suitable for mounting and operating in any position. Lug shall be listed for copper and aluminum conductors in accordance with UL 486E. Single-pole circuit breakers shall be full module size with not more than one pole per module. Multi-pole circuit breakers shall be of the common-trip type having a single operating handle such that an overload or short circuit on any one pole will result in all poles opening simultaneously. All circuit breakers shall have a quick-make, quick-break overcenter toggle-type mechanism, and the handle mechanism shall be trip-free to prevent holding the contacts closed against a short-circuit or sustained overload. All circuit breaker handles shall assume a position between "ON" and "OFF" when tripped automatically. All ratings shall be clearly visible.

2.2.1.2 Ratings

Voltage ratings shall be not less than the applicable circuit voltage. The interrupting rating of the circuit breakers shall be at least 10,000 amps or as indicated. Molded-case circuit breakers shall have nominal voltage ratings, maximum continuous-current ratings, and maximum short-circuit interrupting ratings in accordance with NEMA AB 1. All circuit breakers shall be fully rated.

2.3 CONDUIT AND TUBING

2.3.1 Electrical, Zinc-Coated Steel Metallic Tubing (EMT)

UL 797

2.3.2 Electrical Nonmetallic Tubing (ENT)

NEMA TC 13.

2.3.3 Flexible Conduit, Steel and Plastic

General-purpose type, UL 1; liquid tight, UL 360, and UL 1660.

2.3.4 Rigid Metal Conduit

UL 6.

2.3.5 Rigid Plastic Conduit

NEMA TC 2, UL 651 and UL 651A.

2.3.6 Surface Metal Electrical Raceways and Fittings

UL 5.

2.4 CONDUIT AND DEVICE BOXES AND FITTINGS

2.4.1 Boxes, Metallic Outlet

NEMA OS 1 and UL 514A.

2.4.2 Boxes, Nonmetallic, Outlet and Flush-Device Boxes and Covers

NEMA OS 2 and UL 514C.

2.4.3 Boxes, Switch (Enclosed), Surface-Mounted

UL 98.

2.4.4 Fittings for Conduit and Outlet Boxes

UL 514B.

2.4.5 Fittings, PVC, for Use with Rigid PVC Conduit and Tubing

UL 514B.

2.5 CONDUIT COATINGS PLASTIC RESIN SYSTEM

NEMA RN 1, Type A-40.

2.6 CONNECTORS, WIRE PRESSURE

2.6.1 For Use With Copper Conductors

UL 486A.

2.7 ELECTRICAL GROUNDING AND BONDING EQUIPMENT

UL 467.

2.7.1 Ground Rods

Ground rods shall be of copper-clad steel conforming to UL 467 not less than 5/8 inch in diameter by 10 feet in length of the sectional type driven full length into the earth.

2.7.2 Ground Bus

The ground bus shall be bare conductor or flat copper in one piece, if

practicable.

2.8 ENCLOSURES

NEMA ICS 6 Type 12 or as indicated.

2.9 LOW-VOLTAGE FUSES AND FUSEHOLDERS

2.9.1 Fuses, High-Interrupting-Capacity, Current-Limiting Type

Fuses, Class G, J, L and CC shall be in accordance with UL 198C.

2.9.2 Fuses, Class R

UL 198E.

2.9.3 Fuses, Class T

UL 198H.

2.9.4 Fuseholders

UL 512.

2.10 INSTRUMENTS, ELECTRICAL INDICATING

ANSI C39.1.

2.11 MOTOR CONTROLS

2.11.1 Automatic Control Devices and Sensors

2.11.1.1 Direct Control

Automatic control devices (such as thermostats, float or pressure switches) which control the starting and stopping of motors directly shall be designed for that purpose and have an adequate horsepower rating.

2.11.1.2 Sensors

Wet well level sensor shall be ultrasonic type with range from 1 to 32 feet. Sensor shall not be affected by changes in water viscosity, ambient temperature, humidity or waves on the water surface. The sensor output shall be 4-20mA analog. The sensor shall be self contained in a NEMA 4X stainless steel housing. Sensor shall operate from a 24 vdc supply voltage.

2.11.1.3 Pilot-Relay Control

Where the automatic-control device does not have such a rating, a magnetic starter shall be used, with the automatic-control device actuating the pilot-control circuit.

2.11.1.4 Manual/Automatic Selection

a. Where combination manual and automatic control is specified and the automatic-control device operates the motor directly, a double-throw, three-position tumbler or rotary switch (marked MANUAL-OFF-AUTOMATIC) shall be provided for the manual control.

b. Where combination manual and automatic control is specified and the automatic-control device actuates the pilot control circuit of a magnetic starter, the magnetic starter shall be provided with a three-position selector switch marked MANUAL-OFF-AUTOMATIC.

c. Connections to the selector switch shall be such that; only the normal automatic regulatory control devices will be bypassed when the switch is in the Manual position; all safety control devices, such as low-or high-pressure cutouts, high-temperature cutouts, and motor-overload protective devices, shall be connected in the motor-control circuit in both the Manual and the Automatic positions of the selector switch. Control circuit connections to any MANUAL-OFF-AUTOMATIC switch or to more than one automatic regulatory control device shall be made in accordance with wiring diagram approved by the Contracting Officer unless such diagram is included on the drawings. All controls shall be 120 volts or less unless otherwise indicated.

2.12 PANELBOARDS

Dead-front construction, NEMA PB 1 and UL 67.

2.13 RECEPTACLES

2.13.1 Hospital Grade

UL 498.

2.13.2 Heavy Duty Grade

All receptacles shall be heavy duty grade per NEMA WD 1. and shall be ground fault interrupting type per UL 943, Class A or B.

2.14 SNAP SWITCHES

UL 20.

2.15 TAPES

2.15.1 Plastic Tape

UL 510.

2.15.2 Rubber Tape

UL 510.

2.16 TRANSFORMERS

Single- and three-phase transformers shall have two windings per phase. Full-capacity standard NEMA taps shall be provided in the primary windings of transformers unless otherwise indicated. Three-phase transformers shall be configured with delta-wye windings, except as indicated. "T" connections may be used for transformers rated 15 kVA or below.

2.16.1 Transformers, Dry-Type

Transformers shall have 220 degrees C insulation system for transformers 15 kVA and greater, and shall have 180 degrees C insulation system for

transformers rated 10 kVA and less, with temperature rise not exceeding 150 degrees C under full-rated load in maximum ambient temperature of 40 degrees C. Transformer of 150 degrees C temperature rise shall be capable of carrying continuously 100 percent of nameplate kVA without exceeding insulation rating.

a. 600 Volt or Less Primary:

NEMA ST 20, UL 506, general purpose, dry-type, self-cooled. Transformers shall be provided in NEMA 1 enclosure.

2.17 WIRING DEVICES

NEMA WD 1 for wiring devices, and NEMA WD 6 for dimensional requirements of wiring devices.

2.18 CONTROLS

2.18.1 General

NEMA ICS 1, NEMA ICS 2, NEMA ICS 3 and NEMA ICS 6 and UL 508. PLC shall be mounted in NEMA ICS 6 Type 12 enclosure. Interposing terminal blocks shall be provided and pre-wired to all PLC I/O. External devices shall not be wired directly to PLC I/O modules.

2.18.2 Programmable Logic Controllers (PLC)

a. Central Processing Unit (CPU): The CPU shall have a minimum of l6k bytes of user logic memory and an execution speed of less than 0.6ms per command. CPU shall contain 2 built in communicaiton ports, one of which shall be compatible with the Operator Interface (HMI). The second communciation port shall be capable of accepting a computer interface or hand held programmer connection without disconnecting the HMI.

b. Discrete Input Module: Coordinate discrete input module voltage and wiring with Variable Speed Drives (VSD) and other remote devices.

c. Discrete Output Module: Relay type output contacts shall be rated at 0.5A, 120 vac, minimum. Transistor type outputs shall be coordinated with VSD and other remote devices for correct voltage and current rating.

d. Analog Input Module: Analog input shall be 4 - 20 mA DC, 16 bit minimum differential.

e. Analog Output Module: Analog outputs shall be 4 - 20 mA DC, 12 bit minimum.

f. Programming Software: The PLC shall be programmable using an editing software package compatible with Windows NT, 98, 2000 computers. Programming shall be viewable and editable as Ladder Logic or State Logic. Programming software and all cables and other accessories required to view, download or edit the PLC program shall be provided to the Government.

2.18.3 Human Machine Interface Panel (HMI)

HMI shall be mounted in the door of the PLC enclsoure and shall communicate with the PLC via an external interface port and cable. Operating voltage shall be 120 VAC or 24 VDC. Operating temperature shall be 0 degrees through 40 degrees C and 20 to 85 percent non-condensing humidity. Display shall be a 6 inch diagonal, 64 color, TFT LCD with a minimum resolution of 320 x 240 pixels. 2 MB of user memory shall be provided. The HMI shall be programmable by an editing software compatible with Windows NT, 98, 2000 computers. Programming software and all accessories required to download and edit the HMI program shall be provided to the Government.

PART 3 EXECUTION

3.1 GROUNDING

Grounding shall be in conformance with NFPA 70, the contract drawings, and the following specifications.

3.1.1 Ground Rods

The resistance to ground shall be measured using the fall-of-potential method described in IEEE Std 81. The maximum resistance of a driven ground shall not exceed 25 ohms under normally dry conditions. If the resultant resistance exceeds 25 ohms measured not less than 48 hours after rainfall, the Contracting Officer shall be notified immediately. Connections below grade shall be by exothermic weld. Connections above grade shall be by exothermic weld or shall use UL 467 approved connectors.

3.1.2 Grounding Conductors

A green equipment grounding conductor, sized in accordance with NFPA 70 shall be provided, regardless of the type of conduit. Equipment grounding bars shall be provided in all panelboards. The equipment grounding conductor shall be carried back to the service entrance grounding connection or separately derived grounding connection. All equipment grounding conductors, including metallic raceway systems used as such, shall be bonded or joined together in each wiring box or equipment enclosure. Metallic raceways and grounding conductors shall be checked to assure that they are wired or bonded into a common junction. Metallic boxes and enclosures, if used, shall also be bonded to these grounding conductors by an approved means per NFPA 70.

3.2 WIRING METHODS

Wiring shall conform to NFPA 70, the contract drawings, and the following specifications. Unless otherwise indicated, wiring shall consist of insulated conductors installed in rigid zinc-coated steel conduit electrical metallic tubing. Wire fill in conduits shall be based on NFPA 70 for the type of conduit and wire insulations specified.

3.2.1 Conduit and Tubing Systems

Conduit and tubing systems shall be installed as indicated. Conduit sizes shown are based on use of copper conductors with insulation types as described in paragraph WIRING METHODS. Minimum size of raceways shall be 3/4 inch. EMT shall not be installed in damp or wet locations, or the air space of exterior masonry cavity walls. Bushings, manufactured fittings or boxes providing equivalent means of protection shall be installed on the ends of all conduits and shall be of the insulating type, where required by NFPA 70. Only UL listed adapters shall be used to connect EMT to rigid

metal conduit, cast boxes, and conduit bodies. Penetrations of above grade floor slabs, time-rated partitions and fire walls shall be firestopped in accordance with Section 07840 FIRESTOPPING. Raceways crossing structural expansion joints or seismic joints shall be provided with suitable expansion fittings or other suitable means to compensate for the building expansion and contraction and to provide for continuity of grounding. Wiring installed in underfloor raceway system shall be suitable for installation in wet locations.

3.2.1.1 Pull Wires

A pull wire shall be inserted in each empty raceway in which wiring is to be installed if the raceway is more than 50 feet in length. The pull wire shall have not less than 200 pounds per square inch tensile strength. Not less than 10 inches of slack shall be left at each end of the pull wire.

3.2.1.2 Conduit Stub-Ups

Where conduits are to be stubbed up through concrete floors, a short elbow shall be installed below grade to transition from the horizontal run of conduit to a vertical run. A conduit coupling fitting, threaded on the inside shall be installed, to allow terminating the conduit flush with the finished floor. Wiring shall be extended in rigid threaded conduit to equipment, except that where required, flexible conduit may be used 6 inches above the floor. Empty or spare conduit stub-ups shall be plugged flush with the finished floor with a threaded, recessed plug.

3.2.1.3 Below Slab-on-Grade or in the Ground

Electrical wiring below slab-on-grade shall be protected by a conduit system. Conduit passing vertically through slabs-on-grade shall be rigid steel. Rigid steel conduits installed below slab-on-grade or in the earth shall be field wrapped with 0.010 inch thick pipe-wrapping plastic tape applied with a 50 percent overlay, or shall have a factory-applied polyvinyl chloride, plastic resin, or epoxy coating system.

3.2.1.4 Installing in Slabs Including Slabs on Grade

Conduit installed in slabs-on-grade shall be rigid steel or IMC. Conduits shall be installed as close to the middle of concrete slabs as practicable without disturbing the reinforcement. Outside diameter shall not exceed 1/3 of the slab thickness and conduits shall be spaced not closer than 3 diameters on centers except at cabinet locations where the slab thickness shall be increased as approved by the Contracting Officer. Where conduit is run parallel to reinforcing steel, the conduit shall be spaced a minimum of one conduit diameter away but not less than one inch from the reinforcing steel.

3.2.1.5 Changes in Direction of Runs

Changes in direction of runs shall be made with symmetrical bends or cast-metal fittings. Field-made bends and offsets shall be made with an approved hickey or conduit-bending machine. Crushed or deformed raceways shall not be installed. Trapped raceways in damp and wet locations shall be avoided where possible. Lodgment of plaster, dirt, or trash in raceways, boxes, fittings and equipment shall be prevented during the course of construction. Clogged raceways shall be cleared of obstructions or shall be replaced.

3.2.1.6 Supports

Metallic conduits and tubing,and the support system to which they are attached, shall be securely and rigidly fastened in place to prevent vertical and horizontal movement at intervals of not more than 10 feet and within 3 feet of boxes, cabinets, and fittings, with approved pipe straps, wall brackets, conduit clamps, conduit hangers, threaded C-clamps, beam clamps, or ceiling trapeze. Loads and supports shall be coordinated with supporting structure to prevent damage or deformation to the structure. Loads shall not be applied to joist bridging. Attachment shall be by expansion bolts on concrete or brick; by machine screws, welded threaded studs, heat-treated or spring-steel-tension clamps on steel work. Nail-type nylon anchors or threaded studs driven in by a powder charge and provided with lock washers and nuts may be used in lieu of expansion bolts or machine screws. Raceways or pipe straps shall not be welded to steel structures. Raceways shall not be supported using wire or nylon ties. Upper raceways shall not be used as a means of support for lower raceways. Supporting means shall not be shared between electrical raceways and mechanical piping or ducts. Conduits shall be fastened to sheet-metal boxes and cabinets with two locknuts where required by NFPA 70, where insulating bushings are used, and where bushings cannot be brought into firm contact with the box; otherwise, a single locknut and bushing may be used. Threadless fittings for electrical metallic tubing shall be of a type approved for the conditions encountered. Additional support for horizontal runs is not required when EMT rests on steel stud cutouts.

3.2.1.7 Exposed Raceways

Exposed raceways shall be installed parallel or perpendicular to walls, structural members, or intersections of vertical planes and ceilings.

3.2.2 Cables and Conductors

Installation shall conform to the requirements of NFPA 70. Covered, bare or insulated conductors of circuits rated over 600 volts shall not occupy the same equipment wiring enclosure, cable, or raceway with conductors of circuits rated 600 volts or less.

3.2.2.1 Sizing

Unless otherwise noted, all sizes are based on copper conductors and the insulation types indicated. Sizes shall be not less than indicated. Branch-circuit conductors shall be not smaller than No. 12 AWG. Conductors for branch circuits of 120 volts more than 100 feet long and of 277 volts more than 230 feet long, shall be no smaller than No. 10 AWG. Class 1 remote control and signal circuit conductors shall be not less than No. 14 AWG. Class 2 remote control and signal circuit conductors shall be not less than No. 16 AWG. Class 3 low-energy, remote-control and signal circuits shall be not less than No. 22 AWG.

3.2.2.2 Conductor Identification and Tagging

Power, control, and signal circuit conductor identification shall be provided within each enclosure where a tap, splice, or termination is made. Where several feeders pass through a common pull box, the feeders shall be tagged to indicate clearly the electrical characteristics, circuit number, and panel designation. Phase conductors of low voltage power circuits shall be identified by color coding. Phase identification by a particular color shall be maintained continuously for the length of a circuit,

including junctions.

a. Color coding shall be provided for service, feeder, branch, and ground conductors. Color shall be green for grounding conductors and white for neutrals; except where neutrals of more than one system are installed in the same raceway or box, other neutral shall be white with colored (not green) stripe. The color coding for 3-phase and single-phase low voltage systems shall be as follows:

   120/208-volt, 3-phase: Black(A), red(B), and blue(C).
   277/480-volt, 3-phase: Brown(A), orange(B), and yellow(C).
   120/240-volt, 1-phase: Black and red.

b. Conductor phase and voltage identification shall be made by color-coded insulation for all conductors smaller than No. 6 AWG. For conductors No. 6 AWG and larger, identification shall be made by color-coded insulation, or conductors with black insulation may be furnished and identified by the use of half-lapped bands of colored electrical tape wrapped around the insulation for a minimum of 3 inches of length near the end, or other method as submitted by the Contractor and approved by the Contracting Officer.

c. Control and signal circuit conductor identification shall be made by color-coded insulated conductors, plastic-coated self-sticking printed markers, permanently attached stamped metal foil markers, or equivalent means as approved. Control circuit terminals of equipment shall be properly identified. Terminal and conductor identification shall match that shown on approved detail drawings. Hand lettering or marking is not acceptable.

3.3 BOXES AND SUPPORTS

Boxes shall be provided in the wiring or raceway systems where required by NFPA 70 for pulling of wires, making connections, and mounting of devices or fixtures. Pull boxes shall be furnished with screw-fastened covers. Indicated elevations are approximate. Unless otherwise indicated, boxes for wall switches shall be mounted 48 inches above finished floors. Switch and outlet boxes located on opposite sides of fire rated walls shall be separated by a minimum horizontal distance of 24 inches. The total combined area of all box openings in fire rated walls shall not exceed 100 square inches per 100 square feet. Maximum box areas for individual boxes in fire rated walls vary with the manufacturer and shall not exceed the maximum specified for that box in UL Elec Const Dir. Only boxes listed in UL Elec Const Dir shall be used in fire rated walls.

3.3.1 Box Applications

Each box shall have not less than the volume required by NFPA 70 for number of conductors enclosed in box. Boxes for metallic raceways shall be listed for the intended use when located in normally wet locations, when flush or surface mounted on outside of exterior surfaces, or when located in hazardous areas. Boxes installed in wet locations and boxes installed flush with the outside of exterior surfaces shall be gasketed. Boxes for mounting lighting fixtures shall be not less than 4 inches square, or octagonal, except smaller boxes may be installed as required by fixture configuration, as approved. Cast-metal boxes with 3/32 inch wall thickness are acceptable. Large size boxes shall be NEMA 1 or as shown. Boxes in

other locations shall be sheet steel except that aluminum boxes may be used with aluminum conduit, and nonmetallic boxes may be used with nonmetallic conduit and tubing or nonmetallic sheathed cable system, when permitted by NFPA 70. Boxes for use in masonry-block or tile walls shall be square-cornered, tile-type, or standard boxes having square-cornered, tile-type covers.

3.3.2 Brackets and Fasteners

Boxes and supports shall be fastened to with bolts and metal expansion shields on concrete or brick, and with machine screw or welded studs on steel work. Threaded studs driven in by powder charge and provided with lockwashers and nuts, or nail-type nylon anchors may be used in lieu of expansion shields, or machine screws. Penetration of more than 1-1/2 inches into reinforced-concrete beams or more than 3/4 inch into reinforced-concrete joists shall avoid cutting any main reinforcing steel.

3.4 DEVICE PLATES

One-piece type device plates shall be provided for all outlets and fittings. Plates shall be of stainless steel, and have rounded or beveled edges. Screws shall be of stainless steel with countersunk heads. Plates shall be installed with an alignment tolerance of 1/16 inch. The use of sectional-type device plates will not be permitted. Plates installed in wet locations shall be gasketed and provided with a hinged, gasketed cover, unless otherwise specified.

3.5 RECEPTACLES

3.5.1 Single and Duplex, 15 or 20-ampere, 125 volt

Single and duplex receptacles shall be rated 15 amperes, 125 volts, two-pole, three-wire, grounding type with polarized parallel slots. Bodies shall match color of switch handles in the same room. Contact arrangement shall be such that contact is made on two sides of an inserted blade. Receptacle shall be side- or back-wired with two screws per terminal. The third grounding pole shall be connected to the metal mounting yoke. Receptacles with ground fault circuit interrupters shall be UL Class A type unless otherwise shown. Ground fault circuit protection shall be provided as required by NFPA 70 and as indicated on the drawings.

3.5.2 Weatherproof Applications

3.5.2.1 Damp Locations

Receptacles in damp locations shall be mounted in an outlet box with a gasketed, weatherproof, cast-metal cover plate (device plate, box cover) and a gasketed cap (hood, receptacle cover) over each receptacle opening. The cap shall be a flap type attached to the cover with a spring loaded hinge.

3.5.2.2 Wet Locations

Receptacles in wet locations shall be installed in an assembly rated for such use whether the plug is inserted or withdrawn, unless otherwise indicated. In a duplex installation, the receptacle cover shall be configured to shield the connections whether one or both receptacles are in

use. Assemblies which utilize a self-sealing boot or gasket to maintain wet location rating shall be furnished with a compatible plug at each receptacle location and a sign notifying the user that only plugs intended for use with the sealing boot shall be connected during wet conditions.

3.6 WALL SWITCHES

Wall switches shall be of the totally enclosed tumbler type. Wiring terminals shall be of the screw type or of the solderless pressure type having suitable conductor-release arrangement. Not more than one switch shall be installed in a single-gang position. Switches shall be rated 15-ampere 277-volt for use on alternating current only.

3.7 FUSES

Equipment provided under this contract shall be provided with a complete set of properly rated fuses when the equipment manufacturer utilize fuses in the manufacture of the equipment, or if current-limiting fuses are required to be installed to limit the ampere-interrupting capacity of circuit breakers or equipment to less than the maximum available fault current at the location of the equipment to be installed. Fuses shall have a voltage rating of not less than the phase-to-phase circuit voltage, and shall have the time-current characteristics required for effective power system coordination.

3.7.1 Cartridge Fuses; Current-Limiting Type

Cartridge fuses, current-limiting type, Class J, RK,1 RK5 and CC shall have tested interrupting capacity not less than 100,000 amperes. Fuse holders shall be the type that will reject all Class H fuses.

3.7.2 Continuous Current Ratings (600 Amperes and Smaller)

Service entrance and feeder circuit fuses (600 amperes and smaller) shall be Class J, current-limiting, with 200,000 amperes interrupting capacity.

3.7.3 Motor and Transformer Circuit Fuses

Motor, motor controller, transformer, and inductive circuit fuses shall be Class RK1 or RK5, current-limiting, time-delay with 200,000 amperes interrupting capacity.

3.8 UNDERGROUND SERVICE

Unless otherwise indicated, interior conduit systems shall be stubbed out 5 feet beyond the building wall and 2 feet below finished grade, for interface with the exterior service lateral conduits and exterior communications conduits. Outside conduit ends shall be bushed when used for direct burial service lateral conductors. Outside conduit ends shall be capped or plugged until connected to exterior conduit systems. Underground service lateral conductors will be extended to building service entrance and terminated in accordance with the requirements of Section 16375 ELECTRICAL DISTRIBUTION SYSTEM, UNDERGROUND and NFPA 70.

3.9 MOTOR-DISCONNECT MEANS

Each motor shall be provided with a disconnecting means when required by NFPA 70 even though not indicated. For single-phase motors, a single or double pole toggle switch, rated only for alternating current, will be

acceptable for capacities less than 30 amperes, provided the ampere rating of the switch is at least 125 percent of the motor rating. Switches shall disconnect all ungrounded conductors.

3.10 TRANSFORMER INSTALLATION

Three-phase transformers shall be connected only in a delta-wye or wye-delta configuration as indicated. Transformers to be located within the building may be provided in the manufacturer's standard, ventilated indoor enclosure designed for use in 40 degrees C ambient temperature, unless otherwise indicated.

3.11 EQUIPMENT CONNECTIONS

Wiring not furnished and installed under other sections of the specifications for the connection of electrical equipment as indicated on the drawings shall be furnished and installed under this section of the specifications. Connections shall comply with the applicable requirements of paragraph WIRING METHODS. Flexible liquid-tight conduits 6 feet or less in length shall be provided to all electrical equipment subject to periodic removal, vibration, or movement and for all motors. All motors shall be provided with separate grounding conductors. Liquid-tight conduits shall be used in damp or wet locations.

3.12 CIRCUIT PROTECTIVE DEVICES

The Contractor shall calibrate, adjust, set and test each new adjustable circuit protective device to ensure that they will function properly prior to the initial energization of the new power system under actual operating conditions.

3.13 PAINTING AND FINISHING

Field-applied paint on exposed surfaces shall be provided under Section 09900 PAINTING, GENERAL.

3.14 REPAIR OF EXISTING WORK

The work shall be carefully laid out in advance, and where cutting, channeling, chasing, or drilling of floors, walls, partitions, ceiling, or other surfaces is necessary for the proper installation, support, or anchorage of the conduit, raceways, or other electrical work, this work shall be carefully done, and any damage to building, piping, or equipment shall be repaired by skilled mechanics of the trades involved at no additional cost to the Government.

3.15 FIELD TESTING

Field testing shall be performed in the presence of the Contracting Officer. The Contractor shall notify the Contracting Officer 7 days prior to conducting tests. The Contractor shall furnish all materials, labor, and equipment necessary to conduct field tests. The Contractor shall perform all tests and inspection recommended by the manufacturer unless specifically waived by the Contracting Officer. The Contractor shall maintain a written record of all tests which includes date, test performed, personnel involved, devices tested, serial number and name of test equipment, and test results. All field test reports will be signed and dated by the Contractor.

3.15.1 Safety

The Contractor shall provide and use safety devices such as rubber gloves, protective barriers, and danger signs to protect and warn personnel in the test vicinity. The Contractor shall replace any devices or equipment which are damaged due to improper test procedures or handling.

3.15.2 Ground-Resistance Tests

The resistance of each grounding electrode and the grounding grid shall be measured using the fall-of-potential method defined in IEEE Std 81. Soil resistivity in the area of the grid shall be measured concurrently with the grid measurements. Ground resistance measurements shall be made before the electrical distribution system is energized and shall be made in normally dry conditions not less than 48 hours after the last rainfall. Resistance measurements of separate grounding electrodes shall be made before the system is bonded together below grade. The combined resistance may be used to meet the required resistance level, but the specified number of electrodes must still be provided.

a. Single rod electrode - 25 ohms.

b. Grounding Grid - 10 ohms.

3.15.3 Ground-Grid Connection Inspection

All below-grade ground-grid connections will be visually inspected by the Contracting Officer before backfilling. The Contractor shall notify the Contracting Officer 24 hours before the site is ready for inspection.

3.16 OPERATING TESTS

After the installation is completed, and at such time as the Contracting Officer may direct, the Contractor shall conduct operating tests for approval. The equipment shall be demonstrated to operate in accordance with the specified requirements. An operating test report shall be submitted in accordance with paragraph FIELD TEST REPORTS.

3.17 FIELD SERVICE

3.17.1 Onsite Training

The Contractor shall conduct a training course for the electrical distribution and PLC control systems. The training period shall consist of a total of 32 hours of normal working time and shall start after the system is functionally completed but prior to final acceptance tests. The course instruction shall cover pertinent points involved in operating, starting, stopping, servicing the equipment, as well as all major elements of the operation and maintenance manuals. Additionally, the course instructions shall demonstrate all routine maintenance operations. A VHS format video tape of the entire training shall be submitted.

3.17.2 Installation Engineer

After delivery of the equipment, the Contractor shall furnish one or more field engineers, regularly employed by the equipment manufacturer to supervise the installation of equipment, assist in the performance of the onsite tests, oversee initial operations, and instruct personnel as to the operational and maintenance features of the equipment.

3.18 ACCEPTANCE

Final acceptance of the facility will not be given until the Contractor has successfully completed all tests and after all defects in installation, material or operation have been corrected.

-- End of Section --

SECTION 16510N

INTERIOR LIGHTING
03/01

PART 1 GENERAL

1.1 REFERENCES

The publications listed below form a part of this specification to the extent referenced. The publications are referred to in the text by the basic designation only.

ILLUMINATING ENGINEERING SOCIETY OF NORTH AMERICA (IESNA)

IES LHBK	(1993) Lighting Handbook, Reference and Application

NATIONAL ELECTRICAL MANUFACTURERS ASSOCIATION (NEMA)

NEMA C78.42	(1995) Electric Lamps - Guidelines for High-Pressure Sodium Lamps
NEMA C82.4	(1992) Ballasts for High-Intensity-Discharge and Low-Pressure Sodium Lamps (Multiple-Supply Type)
NEMA C82.11	(1993; R 1998) High-Frequency Fluorescent Lamp Ballasts
NEMA ICS 2	(1993) Industrial Control and Systems Controllers, Contactors and Overload Relays, Rated Not More Than 2000 Volts AC or 750 Volts DC
NEMA ICS 6	(1993) Industrial Control and Systems Enclosures
NEMA LL 1	(1997) Procedures for Linear Fluorescent Lamp Sample Preparation and the TCLP

NATIONAL FIRE PROTECTION ASSOCIATION (NFPA)

NFPA 70	(1999) National Electrical Code
NFPA 101	(2000) Life Safety Code

UNDERWRITERS LABORATORIES (UL)

UL 773	(1995; R 2000) Plug-In, Locking Type Photocontrols for Use with Area Lighting
UL 773A	(1995; R 1999) Nonindustrial Photoelectric Switches for Lighting Control
UL 924	(1995; R 1997, Bul. 1999 and 2000) Emergency Lighting and Power Equipment

UL 935	(1995; R 1998, Bul. 1999 and 2000) Fluorescent-Lamp Ballasts
UL 1029	(1994; R 1997, Bul. 2000) High-Intensity-Discharge Lamp Ballasts
UL 1570	(1995; R 1999, Bul. 2000) Fluorescent Lighting Fixtures
UL 1572	(1995; R 1999, Bul. 2000) High Intensity Discharge Lighting Fixtures

1.2 RELATED REQUIREMENTS

Section 16050N, "Basic Electrical Materials and Methods," applies to this section, with the additions and modifications specified herein. Materials not considered to be lighting equipment or lighting fixture accessories are specified in Section 16415A, "Electrical Work, Interior." Lighting fixtures and accessories mounted on exterior surfaces of buildings are specified in this section.

1.3 DEFINITIONS

1.3.1 Average Life

Time after which 50 percent will have failed and 50 percent will have survived under normal conditions.

1.3.2 Total Harmonic Distortion (THD)

The root mean square (RMS) of all the harmonic components divided by the total fundamental current.

1.4 SUBMITTALS

Submit the following in accordance with Section 01330, "Submittal Procedures." Data, drawings, and reports shall employ the terminology, classifications, and methods prescribed by the IES LHBK, as applicable, for the lighting system specified.

SD-03 Product Data

Fluorescent lighting fixtures; G

Fluorescent electronic ballasts; G

Fluorescent lamps; G

High-intensity-discharge (HID) lighting fixtures; G

HID ballasts; G

High-pressure sodium (HPS) lamps; G

Lighting contactor; G

Photocell switch; G

Exit signs; G

Emergency lighting equipment; G

SD-06 Test Reports

Operating test

Submit test results as stated in paragraph entitled "Field Quality Control."

SD-10 Operation and Maintenance Data

Lighting Control System, Data Package 5; G

Submit operation and maintenance data in accordance with Section 01781N, "Operation and Maintenance Data" and as specified herein.

SD-11 Closeout Submittals

Information card; G

1.5 QUALITY ASSURANCE

1.5.1 Fluorescent Electronic Ballasts

Submit ballast catalog data as required in the paragraph entitled "Fluorescent Lamp Electronic Ballasts" contained herein. As an option, submit the fluorescent fixture manufacturer's electronic ballast specification information in lieu of the actual ballast manufacturer's catalog data. This information shall include published specifications and sketches, which covers the information required by the paragraph entitled "Fluorescent Lamp Electronic Ballasts" herein. This information may be supplemented by catalog data if required, and shall contain a list of vendors with vendor part numbers.

1.5.2 Information Card

For each electronic ballast manufacturer used in the construction, furnish a typewritten card, laminated in plastic. Card shall be 8 1/2 by 11 inches minimum and shall contain the information listed on Form 1 located at the end of this section. The card shall be turned over to the officer in charge of construction with warranty and equipment information.

1.6 ELECTRONIC BALLAST WARRANTY

Furnish the electronic ballast manufacturer's warranty. The warranty period shall not be less than 5 years from the date of manufacture of the electronic ballast. Ballast assembly in the lighting fixture, transportation, and on-site storage shall not exceed 12 months, thereby permitting 4 years of the ballast 5 year warranty to be in service and energized. The warranty shall state that the malfunctioning ballast shall be exchanged by the manufacturer and promptly shipped to the using Government facility. The replacement ballast shall be identical to, or an improvement upon, the original design of the malfunctioning ballast.

PART 2 PRODUCTS

2.1 FLUORESCENT LIGHTING FIXTURES

UL 1570. Fluorescent fixtures shall have electronic ballasts unless specifically indicated otherwise.

2.1.1 Fluorescent Lamp Electronic Ballasts

The electronic ballast shall as a minimum meet the following characteristics:

a. Ballast shall comply with UL 935, NEMA C82.11, and NFPA 70 unless specified otherwise. Ballast shall be designed for the wattage of the lamps used in the indicated application. Ballasts shall be designed to operate on the voltage system to which they are connected.

b. Power factor shall be 0.95 (minimum).

c. Ballast shall operate at a frequency of 20,000 Hertz (minimum).

d. Ballast shall have light regulation of plus or minus 10 percent lumen output with a plus or minus 10 percent input voltage regulation. Ballast shall have 10 percent flicker (maximum) using any compatible lamp.

e. Ballast shall be UL listed Class P with a sound rating of "A."

f. Ballast enclosure size shall conform to standards of electromagnetic ballasts. Ballast shall have circuit diagrams and lamp connections displayed on ballast packages. Ballast shall operate lamps in a parallel circuit configuration that permits the operation of remaining lamps if one or more lamps fail or are removed.

g. Ballast shall operate in an instant start mode.

h. Electronic ballast shall have a full replacement warranty of 5 years from date of manufacture as specified in paragraph entitled "Electronic Ballast Warranty" herein.

2.1.1.1 T-8 Lamp Ballast

a. Ballast shall be capable of starting and maintaining operation at a minimum of 0 degrees F for F32T8 lamps, unless otherwise indicated.

b. Total harmonic distortion (THD): Shall be 20 percent (maximum).

c. Input wattage.

(1) 32 watts (maximum) when operating one F32T8 lamp.

(2) 62 watts (maximum) when operating two F32T8 lamps

(3) 92 watts (maximum) when operating three F32T8 lamps

(4) 114 watts (maximum) when operating four F32T8 lamps

2.1.2 Fluorescent Lamps

a. T-8 rapid start low mercury lamps shall be rated 32 watts (maximum), 2800 initial lumens (minimum), CRI of 75 (minimum), color temperature of 3500 K, and an average rated life of 20,000 hours. Low mercury lamps shall have passed the EPA Toxicity Characteristic Leachate Procedure (TCLP) for mercury by using the lamp sample preparation procedure described in NEMA LL 1.

Average rated life is based on 3 hours operating per start.

2.1.3 Open-Tube Fluorescent Fixtures

Provide with self-locking sockets, or lamp retainers (two per lamp). Provide lamps with shatter resistant coating, non-yellowing, nominal thickness of 15 mils, and with 97 percent (minimum) light transmission.

2.2 HIGH-INTENSITY-DISCHARGE (HID) LIGHTING FIXTURES

UL 1572. Provide HID fixtures with tempered glass lenses when using metal-halide lamps.

2.2.1 HID Ballasts

UL 1029 and NEMA C82.4 and shall be constant wattage autotransformer (CWA) or regulator, high power factor type. Provide single-lamp ballasts which shall have a minimum starting temperature of minus 30 degrees C. Ballasts shall be:

a. Designed to operate on the voltage system to which they are connected.

b. Designed for installation in a normal ambient temperature of 40 degrees C.

c. Constructed so that open circuit operation will not reduce the average life.

High-pressure sodium (HPS) ballasts shall have a solid-state igniter/starter with an average life in the pulsing mode of 3500 hours at the intended ambient temperature. Igniter case temperature shall not exceed 90 degrees C in any mode.

2.2.2 High-Pressure Sodium (HPS) Lamps

NEMA C78.42 wattage as indicated. 150 watt lamps, if required, shall be 55 volt type.

2.3 RECESS- AND FLUSH-MOUNTED FIXTURES

Provide type that can be relamped from the bottom. Access to ballast shall be from the bottom. Trim for the exposed surface of flush-mounted fixtures shall be as indicated.

2.4 SUSPENDED FIXTURES

Provide hangers capable of supporting twice the combined weight of fixtures supported by hangers. Provide with swivel hangers to ensure a plumb installation. Hangers shall allow fixtures to swing within an angle of 20 degrees. Brace pendants 4 feet or longer provided in shops or hangers to limit swinging. Single-unit suspended fixtures shall have twin-stem

hangers.

2.5 LIGHTING CONTACTOR

NEMA ICS 2, mechanically held contactor. Contacts shall be rated 120 volts, 20 amperes, and 3 poles. Coils shall be rated 120 volts. Provide in NEMA 12 enclosure conforming to NEMA ICS 6. Contactor shall have silver alloy double-break contacts. Provide contactor with hand-off-automatic selector switch.

2.6 PHOTOCELL SWITCH

UL 773 or UL 773A, hermetically sealed cadmium-sulfide or silicon diode type cell rated 120 volts ac, 60 Hz with single pole double-throw (SPDT) contacts for control of mechanically held contactors. Switch shall turn on at or below 3 footcandles and off at 2 to 10 footcandles. A time delay shall prevent accidental switching from transient light sources. Provide switch:

a. integral to the luminaire. rated 1000W minimum. Provide a directional lens in front of the cell to prevent fixed light sources from creating a turnoff condition.

2.7 EXIT SIGNS

UL 924, NFPA 70, and NFPA 101. Exit signs shall be self-powered type.

2.7.1 Self-Powered LED Type Exit Signs (Battery Backup)

Provide with automatic power failure device, test switch, pilot light, and fully automatic high/low trickle charger in a self-contained power pack. Battery shall be sealed electrolyte type, shall operate unattended, and require no maintenance, including no additional water, for a period of not less than 5 years. LED exit sign shall have emergency run time of 1 1/2 hours (minimum).

2.8 EMERGENCY LIGHTING EQUIPMENT

UL 924, NFPA 70, and NFPA 101. Provide lamps in wattage indicated.

2.8.1 Emergency Lighting Unit

Provide as indicated.

PART 3 EXECUTION

3.1 INSTALLATION

Set lighting fixtures plumb, square, and level with ceiling and walls, in alignment with adjacent lighting fixtures, and secure in accordance with manufacturers' directions and approved drawings. Installation shall meet requirements of NFPA 70. Mounting heights specified or indicated shall be to the bottom of fixture for ceiling-mounted fixtures and to center of fixture for wall-mounted fixtures.

3.1.1 Exit Signs and Emergency Lighting Units

Wire exit signs and emergency lighting units ahead of the switch to the normal lighting circuit located in the same room or area.

3.1.1.1 Exit Signs

Wire exit signs on separate circuits and serve from a separate breaker. Signs shall have only one control, which shall be the separate breaker. Paint control device red and provide lockout.

3.1.2 Photocell Switch Aiming

Aim switch according to manufacturer's recommendations. Set adjustable window slide for minimum footcandles photocell turn-on.

3.2 FIELD QUALITY CONTROL

Upon completion of installation, conduct an operating test to show that equipment operates in accordance with requirements of this section.

FORM 1, ELECTRONIC BALLAST WARRANTY

1. Location _____ 2. Bldg. Name _____

3. Bldg. No. _____ 4. Installation Areas_____

5. Contract No. _____

6. Ballast Manufacturer Name/Address _____

7. Exchange Information _____

8. Warranty Return Number: _____

9. Warranty Period: From _____ To _____

10. Acceptance Date: _____ 11. Inspector: _____

12. Prime Contractor Name/Address: _____

Signature: _____ Date: _____

INSTRUCTIONS FOR FORM 1

1. Location: Name of activity as shown on contract.

2. Bldg. Name: As shown on contract or as provided by Contracting Officer.

3. Bldg. No.: As provided by Contracting Officer.

4. Installation Areas: Main areas in the building where ballasts are installed; floors, room numbers, lean-to, etc. A separate form is required for each ballast manufacturer used in the contract.

5. Contract No.: As shown on the contract.

6. Ballast Manufacturer Name/Address: Ballast manufacturer's name, address, and telephone number.

7. Exchange Information: Ballast exchange information such as point of contact, telephone number, shipping address if different from item 6, and any special shipping instructions.

8. Warranty Return Number: Return authorization number if required.

9. Warranty Period: Insert estimated start and end dates.

10. Acceptance Date: Show date ballasts were accepted by the Contracting Officer.

11. Inspector: Show Government inspector's name.

12. Prime Contractor Name/Address/Signature/Date: Shall be signed and dated by an official of the contracting firm.

-- End of Section --

APPENDIX A

McCALLUM
TESTING LABORATORIES, INC.
Geotechnical Engineering, Materials Testing & Environmental Services

SUBSURFACE EXPLORATION AND GEOTECHNICAL ENGINEERING

PROPOSED STORMWATER PUMP STATION

LANGLEY AIR FORCE BASE

HAMPTON, VIRGINIA

MTL PROJECT #02-3101

Prepared for: Hayes, Seay, Mattern & Mattern, Inc.
448 Viking Drive, Suite 145
Virginia Beach, Virginia 23452

Attention: James E. Spady, P.E.

1808 HAYWARD AVENUE, CHESAPEAKE, VA. 23320 ◆ P. O. BOX 13337, CHESAPEAKE, VA. 23325-0337
PHONE (757) 420-2520 ◆ FAX (757) 424-2874

McCALLUM
TESTING LABORATORIES, INC.
Geotechnical Engineering, Materials Testing & Environmental Services

June 4, 2002

Hayes, Seay, Mattern & Mattern, Inc.
448 Viking Drive, Suite 145
Virginia Beach, Virginia 23452

Attention: **James E. Spady, P.E.**

Subject: **SUBSURFACE EXPLORATION AND GEOTECHNICAL ENGINEERING**
Proposed Stormwater Pump Station – Andrew Street
Langley Air Force Base
Hampton, Virginia
MTL Project #02-3101

Dear **Mr. Spady**:

McCALLUM TESTING LABORATORIES, INC. is pleased to present this report of subsurface exploration and geotechnical engineering services for the above referenced project. Included in this report are:

1. A brief description of the project;
2. An outline of the services performed;
3. A tabulation of the subsurface conditions encountered; and
4. Our detailed recommendations for the design and construction of foundations and subgrade walls.

Should you have any questions concerning this report, please do not hesitate to contact this office at your earliest convenience.

Very truly yours,

McCALLUM TESTING LABORATORIES, INC.

COMMONWEALTH OF VIRGINIA
JON W. EBBERT
No. 034560
6/4/02
PROFESSIONAL ENGINEER

JON W. EBBERT, P.E.
GEOTECHNICAL ENGINEER

COMMONWEALTH OF VIRGINIA
DOUGLAS S. KINLOCH
No. 007960
PROFESSIONAL ENGINEER

DOUGLAS S. KINLOCH, P.E.
CHIEF ENGINEER

1808 HAYWARD AVENUE, CHESAPEAKE, VA. 23320 • P. O. BOX 13337, CHESAPEAKE, VA. 23325-0337
PHONE (757) 420-2520 • FAX (757) 424-2874

SUMMARY

The encountered subsurface conditions and the major geotechnical engineering recommendations have been summarized here for convenience. A detailed description of the soil conditions encountered and our detailed recommendations are provided in the report.

Beneath a surface veneer of topsoil, the borings encountered an 8 to 12 ft. thick fill layer, consisting of very compact to very loose, clayey and silty, fine sand, overlying Coastal Plain Sediments. The sediments consist of very loose to medium compact, silty and clayey sands. At the time of our exploration, water level measurements indicated groundwater to be 4 to 5 feet below existing grade.

- The pump station can be properly supported on a slab type foundation bearing on the silty sands encountered at the base of the required excavation. Maximum settlements should be on the order of ½ inch or less.

- If hydrostatic uplift pressures are excessive, a system of anchor piles can be utilized. Pile lengths and capacity information are presented in the report.

- The parameters to be utilized for design of the temporary sheet piles and the permanent reinforced concrete walls of the pump station are included in the text of the report.

PROJECT INFORMATION

The site for the proposed stormwater pump station is located on the east end of Andrew Street, just east of its intersection with Sijan Road at Langley Air Force Base in Hampton, Virginia. The relatively level site is a grass covered and paved parking area. Along the eastern end of the site, the property slopes moderately downward toward Back River with concrete debris along the eastern edge.

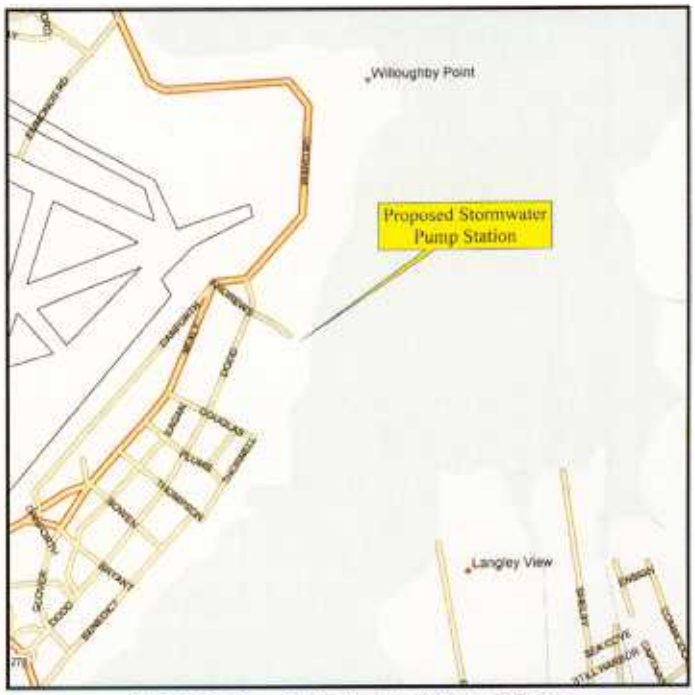

Figure 1. Site Location Plan

The planned pump station will consist of a one-story, pre-engineered modular control building above a wet well. The wet well will extend to a depth of approximately 20 ft. below existing grade. The well will have concrete walls and a base slab. The base slab of the wet well will have plan dimensions of 35 to 40 ft. by 40 to 45 ft. The maximum load exerted by the well base slab is expected to be on the order of 2500 psf.

SCOPE OF SERVICES

The evaluation of the site for the planned stormwater pump station required both the collection of subsurface data and the performance of various geotechnical analyses. These analyses were based on our experience with local conditions and available foundation types. All work was directed and supervised by a Professional Engineer specializing in geotechnical design and construction. This report which describes the exploration and provides our recommendations for the design and construction of foundations, ground slabs and subgrade walls was prepared after reviewing the project information provided to us and analyzing the subsurface data collected for the project.

McCallum Testing Laboratories, Inc. drilled two soil test borings extending to depths of 50.5 ft. each beneath the existing ground surface. Standard Penetration Tests (SPT's) were performed at 2 ft. intervals in the upper 10 ft. of boring and at 5 ft. intervals below 10 ft. All drilling, sampling, and testing was performed in accordance with applicable ASTM Standards or other widely accepted standards. At the completion of drilling, water level measurements were made within the completed bore holes. All samples obtained from the borings were visually examined by a Geotechnical Engineer and visually classified according to the Unified Soils Classification System.

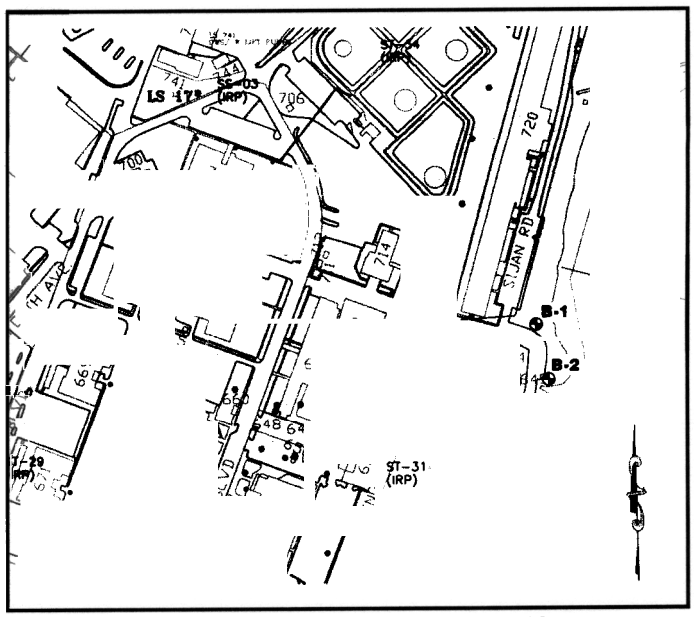

Figure 2. Boring Location Plan

A Site Location Plan, a Boring Location Plan, a Subsurface Profile, a Lateral Pressure vs. Depth diagram, and the detailed results of field sampling and testing are presented in the Appendix to this report.

SUBSURFACE CONDITIONS

Stratigraphy

Directly beneath a surface veneer of topsoil 1 inch thick, the borings encountered a thick layer of man-placed fill overlying Coastal Plain Sediments. A summarization of the subsurface conditions encountered is presented in the following tabulation:

STRATUM	AVERAGE DEPTH (FT)	DESCRIPTION	STANDARD PENETRATION RESISTANCE (BLOWS/FT)
A	0.1 - 10.0	**Fill** – Very compact to very loose, moist to wet, brown and gray, silty and clayey, fine sand (SM, SM-SC) with traces of gravel, brick and shell fragments	52 to 4, Decreasing With Depth
1	10.0 - 17.0	Very loose to loose, wet, brown and gray, silty, clayey, fine sand (SC) with traces of shell fragments	3 to 6
2	17.0 - 50.5*	Loose to medium compact, wet, gray, silty and clayey, fine sand (SM, SM-SC) with traces of shell fragments	9 to 17

* **Maximum Depth of Exploration.**

Groundwater

Our groundwater level measurements made at the completion of drilling operations indicated the level of groundwater to be approximately 4 to 5 ft. below the existing ground surface. Seasonal groundwater level fluctuations on the order of 2 to 3 feet are not uncommon in this area. Lowest groundwater levels normally occur in late summer and early fall while the highest levels generally occur in late winter and early spring. In addition, tidal fluctuations can effect the groundwater level at this site. At the time of our study, we believe groundwater levels were between their seasonal high and low elevations. However, due to the relatively dry conditions over the past year, we expect the average seasonal high elevation is as much as 2 ft. higher than the seasonal high elevation experienced this year.

RECOMMENDATIONS

Basis

The following recommendations are based on data obtained by this subsurface exploration program, the structural and site orientation data given previously and our past experience within the area. If the project information presented is incorrect or changed in the final design or if site or subsurface conditions encountered during construction differ appreciably from those indicated by this report, this office should be notified to determine the applicability of our recommendations in light of the changed conditions.

Wet Well Excavation

The construction of the wet well will require an excavation to a depth of approximately 22 ft. below existing grade. Based on our water level measurement, we expect the excavation will extend as much as 20 ft. below the level of groundwater. The excavation walls will therefore have to be properly supported by a system of braced sheet piles and the level of groundwater should be drawn down to below the excavation bottom with a system of well points. These procedures will permit work within the excavation to proceed unhampered by cave-ins and groundwater intrusion.

Foundation Discussion

The wet well can be properly supported on a slab type foundation bearing on the silty sands encountered at the base of the required excavation. However, it appears, based on our calculations, that the weight of the structure may be less than the anticipated hydrostatic uplift force. Should this be the case, to avoid potential damage to the structure and its associated piping, we recommend one of the following design alternatives be utilized:

1) The bottom slab and walls can be thickened and/or the bottom slab can be extended outward beyond the wet well walls to provide resistance to buoyancy forces.

(2) The wet well base slab can be anchored with a pile foundation system.

(3) A combination of the first two alternatives can be utilized

These alternative foundation systems are discussed within the following sections of this report.

Slab Type Foundation

To provide uniform bearing and foundation soil stabilization, we recommend the foundation slab for the wet well bear on a 12 inch thick blanket of No. 57 crushed stone compacted to a non-yielding condition. Based on the plan dimensions and depth of the wet well, allowable soil pressure of over 10,000 psf are available. As such, the anticipated soil bearing pressures of 2,500 psf can be safely supported.

We expect maximum settlements should be ½ inch or less. Essentially all settlement is expected to occur with the application of the load with no long term settlements anticipated. The magnitude and rate of movement is not expected to adversely affect the structure. However, piping connections should be designed flexible enough to withstand the anticipated movement without causing pipe damage.

To develop additional resistances to the hydrostatic forces on the bottom of the slab, the plan dimensions of the base slab can be extended outward beyond the walls of the wet well. The increase uplift resistance will be equal to the buoyant weight of the soil directly above the extended base. Additional uplift resistance can be obtained by a system of anchor piles.

Pile Foundations

We have confined our pile analyses to 10 and 12 inch square, prestressed, precast concrete piles and helical piers due to their friction capacity and availability. The results of our calculations indicate the following recommended pile capacities for piles extending to the maximum depth of exploration, 50 ft.:

	Recommended Pile Capacities (tons)	
Pile Type	Compression	Uplift
10" square concrete	20	12
12" square concrete	25	15
10", 12" and 14" triple helical pier	8	8

Indicator Piles and Pile Load Tests – Precast Concrete Piles

Indicator piles and pile load tests are fundamental to a properly designed pile foundation system. We recommend a minimum of two indicator piles be installed across the wet well area at production pile locations. Indicator piles should be at least 5 ft. longer than the anticipated production pile length. The results of indicator pile driving should be evaluated by the Geotechnical Engineer to determine if a pile load test is required. If deemed necessary, an uplift load test should be run to failure, if at all possible, in accordance with ASTM D 3689, Section 7.7, Quick Load Test Method, no sooner than 48 hours after installation. The actual production pile lengths and capacities should then be determined based on the results of the indicator pile installations, the available subsurface data and the results of any required load tests.

Precast Concrete Pile Installation

Compatibility of the driving equipment and the pile type being driven is an essential element in achieving the required penetration and a satisfactory pile foundation. We recommend that a pile driving rig equipped with fixed leads and a pile hammer with a minimum energy of 8,000 to 15,000 ft-lbs be utilized.

The required driving resistance for production piles should be determined in accordance with a pile driving formula in conjunction with the results of indicator pile driving and any required load tests. However, the driving of piles in saturated sands can cause densification and an increase in porewater pressure at the tip, resulting in a temporary reduction of the driving resistance and pile capacity. Therefore, due to the effect of the excess porewater pressure, it may not be strictly possible to assign an initial minimum pile driving resistance for production piles. Where low driving resistances are encountered, piles should be retapped the following day to confirm that the final set of individual production piles does not vary significantly from that of successfully load tested piles or that indicated by pile driving formulae. Should such a variation occur, the matter should immediately be brought to the attention of the Geotechnical and Structural Engineers for their evaluation.

Helical Piers Installation and Inspection

The recommended helical piers consist of steel screw anchors with three circular helix shaped steel plates attached to a central steel shaft. The helical piers are installed by drilling the piles to their predetermined tip depth. Installation torque is monitored and averaged over the last three feet of embedment to help determine if the helical piers have achieved the design capacity. At least two indicator piles should be installed and the applied torque monitored. The indicator pile installation records should be provided to the Geotechnical Engineer to determine if an uplift load test is required. Where a load test is required, it should be performed in accordance with the procedures outlined in ASTM D 3689, Section 7.7, Quick Load Test Method. The actual production pile length and capacity should then be determined based on the indicator pile installation records, the available subsurface data and the results of any required load tests.

Pile Installation Inspection

Even the most knowledgeable contractor working with a well written set of specifications will not ordinarily be cognizant of detailed design assumptions. It is best to retain an independent inspector to observe the pile installation procedure and verify the compliance with the intent of the pile installation specifications. We recommend the Geotechnical Engineer be retained to approve each pile in the installation and to revise installation procedures should varying soil conditions be encountered.

Subgrade Walls

Based on the results of our field testing and visual classification of the on-site soils, we recommend the following parameters be utilized for design of the temporary sheet piles, the permanent reinforced concrete walls as well as an extended base slab for uplift resistance:

RECOMMENDED SOIL PARAMETERS FOR SUBGRADE WALL DESIGN			
Depth (ft.)	0 - 6	6 - 17	17 - 50
Soil Unit Weight (pcf)	115	110	115
Buoyant Unit Weight (pcf)	55	50	55
Cohesion (psf)	0	0	0
Angle of Internal Friction	32	28	32
At Rest Earth Pressure Coefficient*	0.47	0.53	0.47
Active Earth Pressure Coefficient	0.31	0.36	0.31
Passive Earth Pressure Coefficient	3.25	2.77	3.25
Adhesion Against Steel (psf)	0	0	0
Friction Angle Against Steel	11	11	11
Adhesion Against Concrete (psf)	0	0	0
Friction Angle Against Concrete	17	17	17

* Please note that the "At-Rest" Earth Pressure Coefficient should be utilized for subgrade walls restrained against inward tilt.

All backfill around subgrade walls should be relatively clean sand (SW, SP, SP-SM, or SM) compacted to at least 95 percent of ASTM D 698.

Since the subgrade walls will be restrained against inward tilt, we recommend the lateral pressure used for the design of the subgrade walls be calculated using an "at-rest" condition. Therefore, the Lateral Pressure vs. Depth Diagram (Figure 3) was developed utilizing "at-rest" coefficients and includes the hydrostatic pressure from the groundwater.

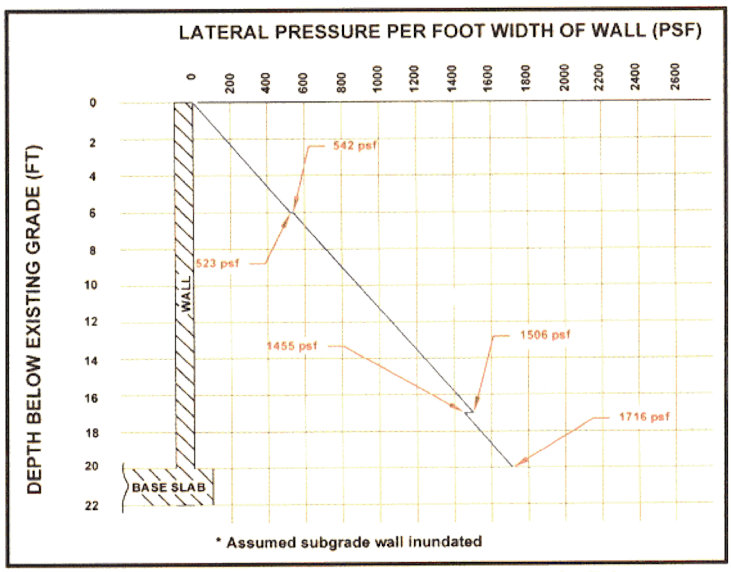

Figure 3. Lateral Pressure vs. Depth Diagram

APPENDIX

Site Location Plan

Boring Location Plan

Lateral Pressure vs. Depth Diagram

Subsurface Profile

Test Boring Records

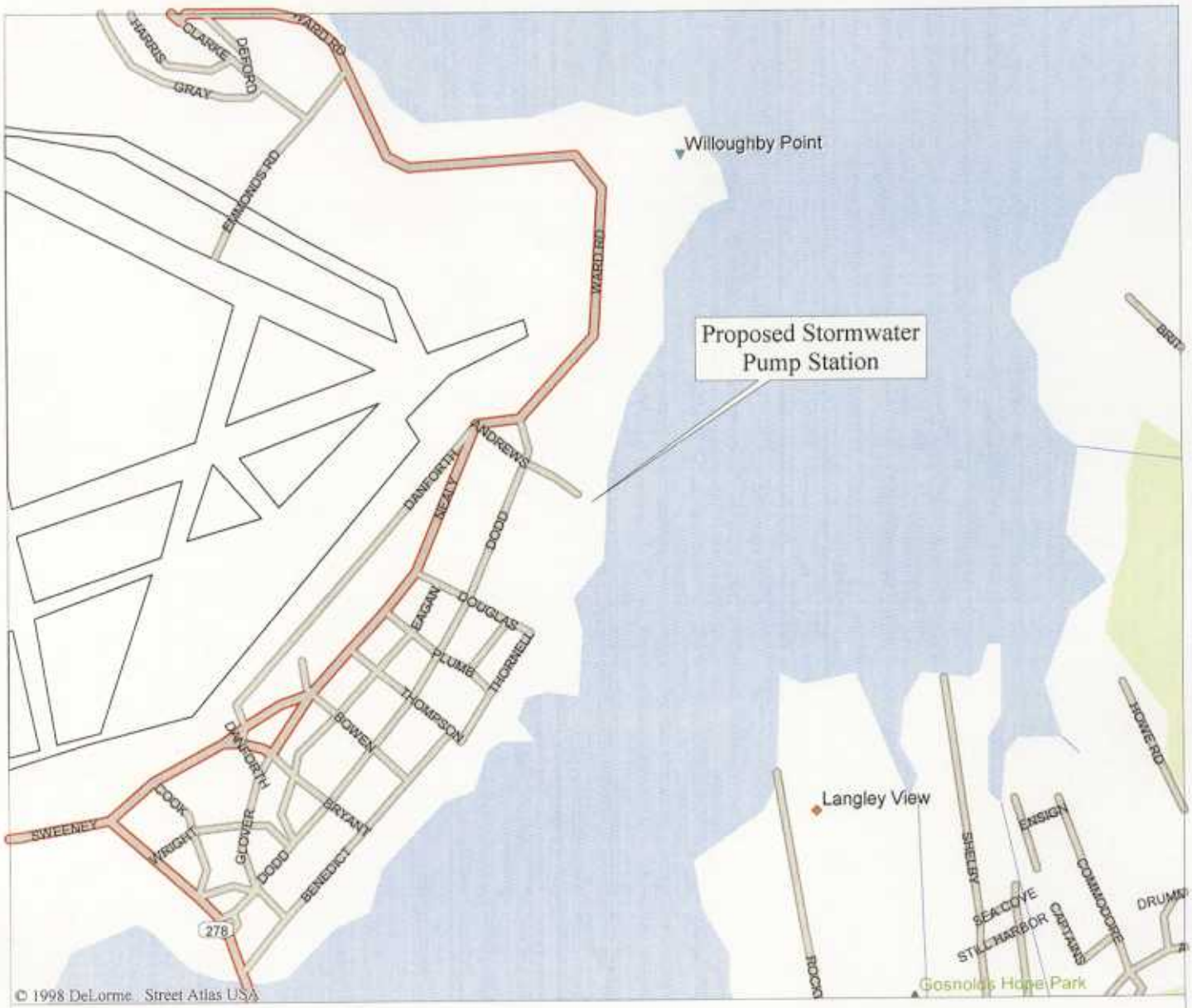

Mag 15.00
Wed May 29 13:01 2002

Scale 1:15,625 (at center)
1000 Feet
500 Meters

Local Road
Major Connector
State Route
Airfield

N
W E
S

McCALLUM TESTING LABORATORIES, INC.

1808 Hayward Avenue
Chesapeake, Virginia 23325-0337

Scale:	As Shown	Approved By:	Jon W. Ebbert, P.E.	Date:	5/20/02
Project:	Proposed Stormwater Pump Station Langley Air Force Base Hampton, Virginia				
Drawing Title:	Site Location Plan			Drawing Number:	1

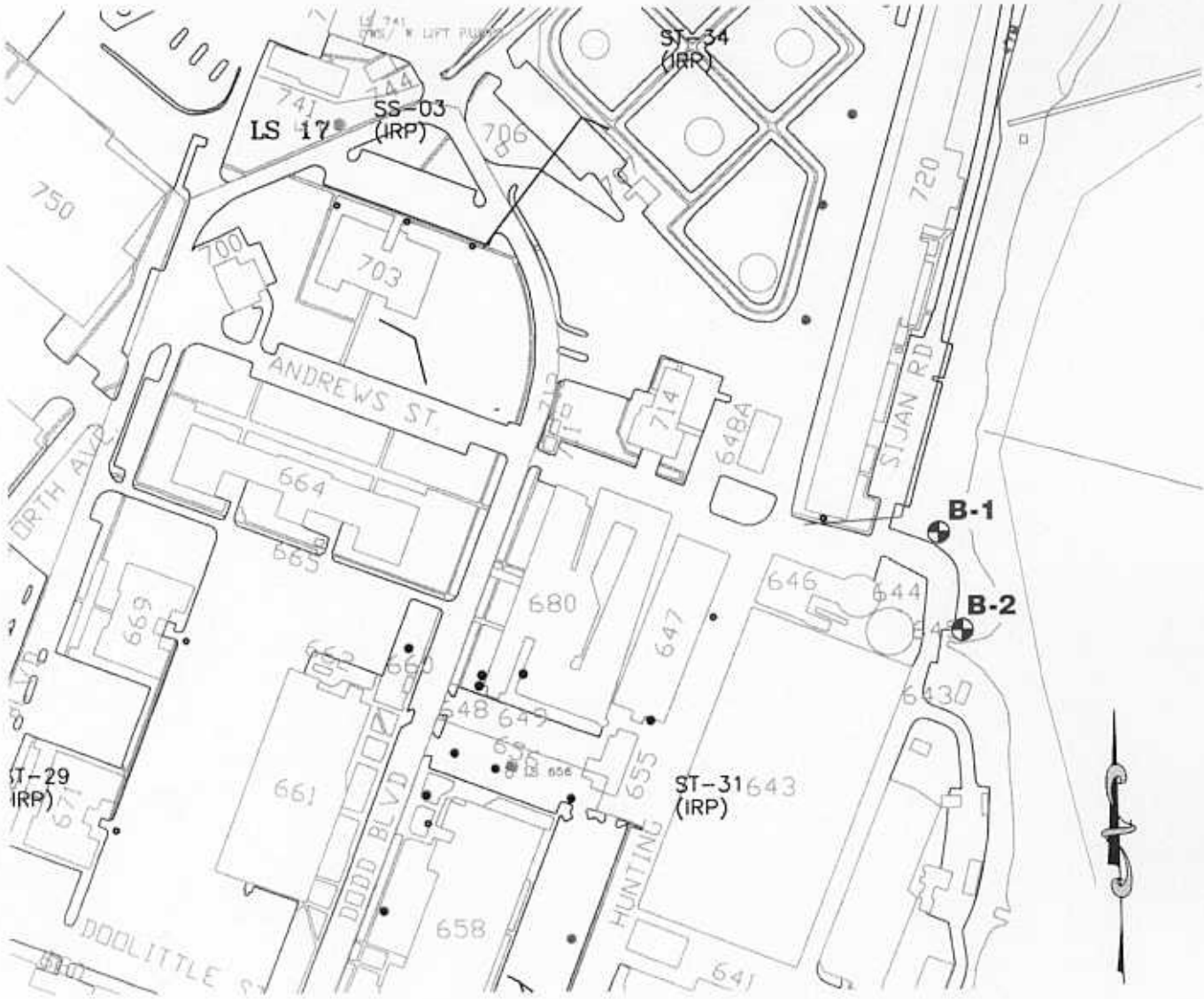

McCALLUM TESTING LABORATORIES, INC.

1808 Hayward Avenue
Chesapeake, Virginia 23325-0337

Scale:	----	Approved By:	Jon W. Ebbert, P.E.	Date:	5/20/02
Project:	Proposed Stormwater Pump Station Langley Air Force Base Hampton, Virginia				
Drawing Title:	Boring Location Plan			Drawing Number:	2

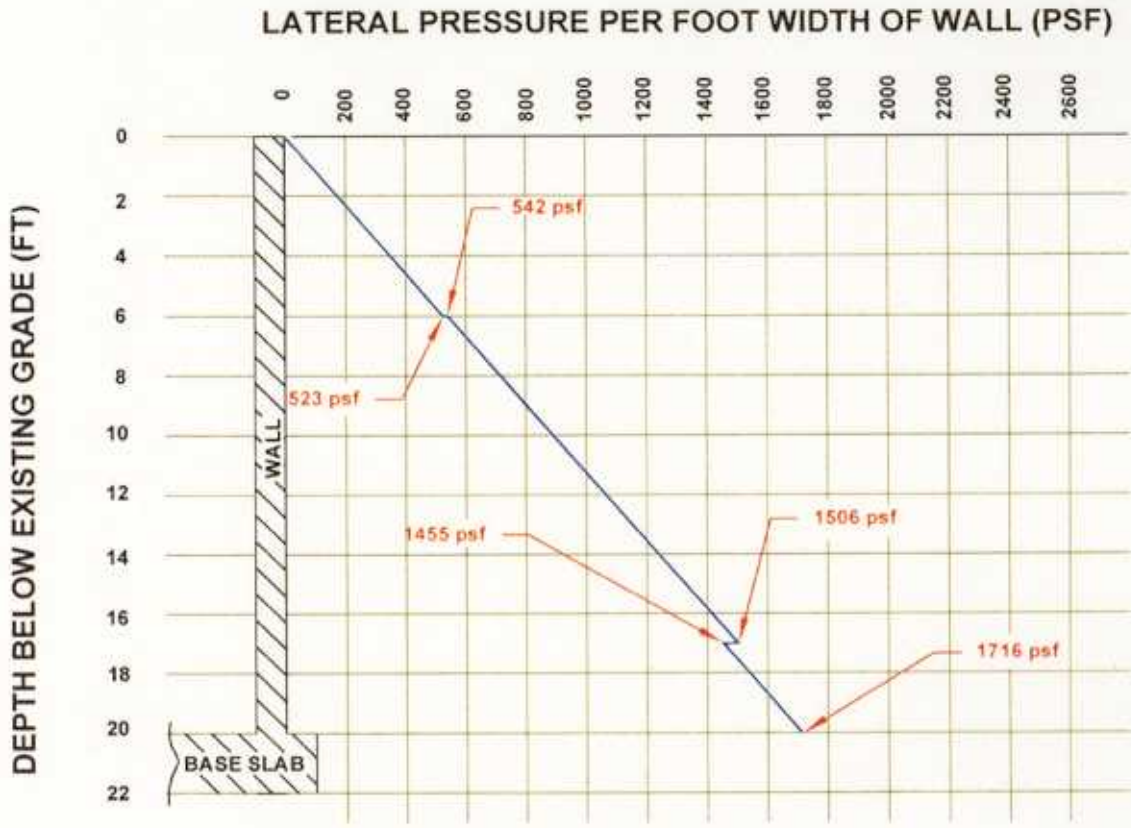

* Assumed subgrade wall inundated

McCALLUM TESTING LABORATORIES, INC.

1808 Hayward Avenue
Chesapeake, Virginia 23325-0337

Scale:	As Shown	Approved By:	Jon W. Ebbert, P.E.	Date:	5/20/02
Project:	Proposed Stormwater Pump Station Langley Air Force Base Hampton, Virginia				
Drawing Title:	Lateral Pressure vs. Depth Below Existing Grade			Drawing Number:	3

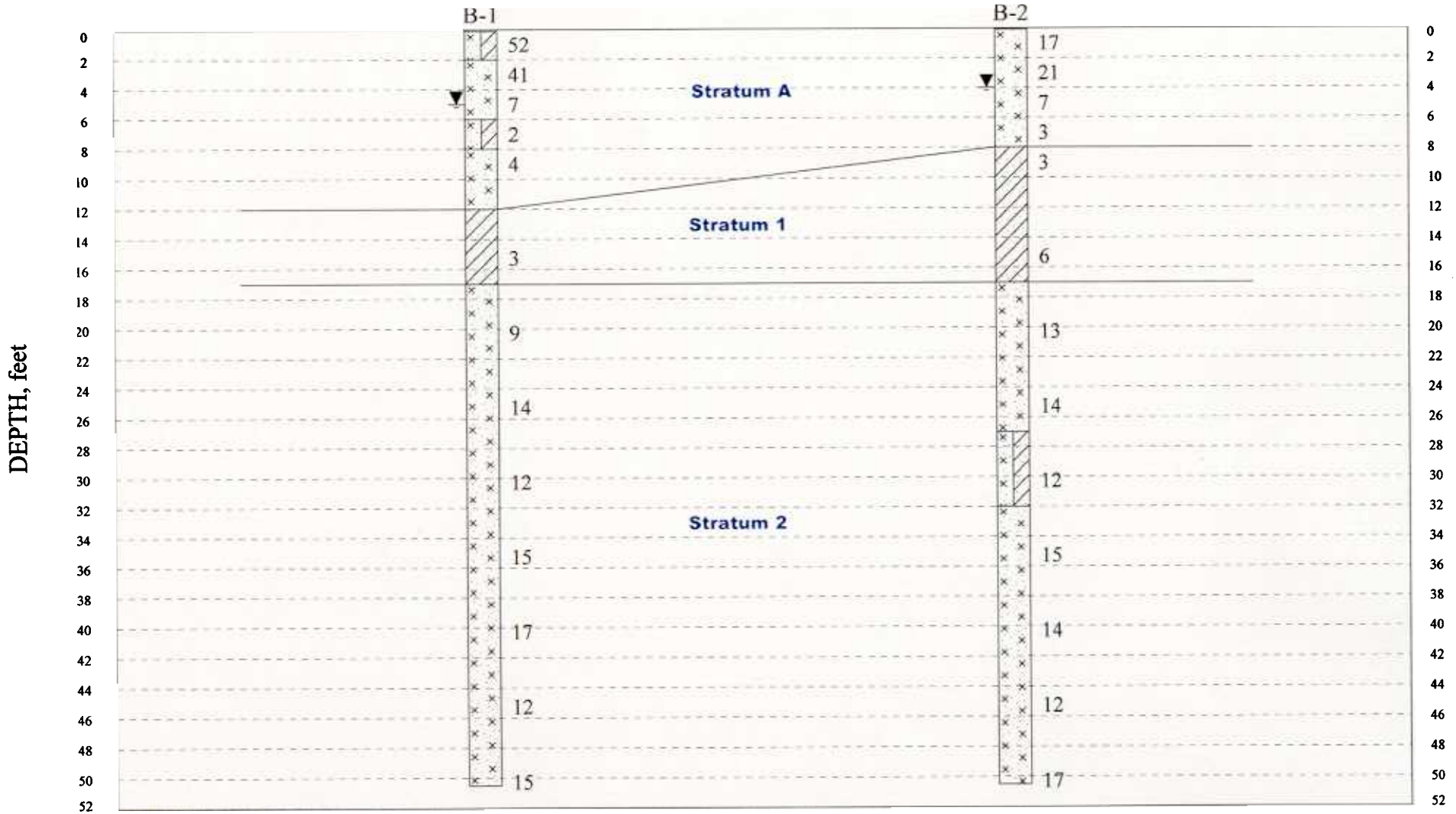

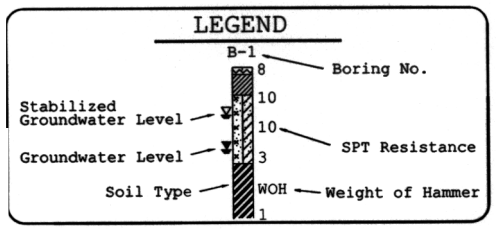

Subsurface Profile

Drawing 4

PROJECT Proposed Stormwater Pump Station
Langley AFB, Hampton, Virginia

PROJECT NO. 02-3101

McCALLUM TESTING LABORATORIES, INC.

McCALLUM

TESTING LABORATORIES, INC.

CHESAPEAKE, VIRGINIA

Unified Soil Classification System
ASTM Designation D 2487

Coarse Grained Soils (More than 50% of materail retained on the No. 200 Sieve)	Gravels (more than 50% retained the No. 4 Sieve)	GW	Well graded gravels, gravel-sand mixtures, little or no fines
		GP	Poorly graded gravels, gravel-sand mixtures, little or no fines
		GM	Silty gravels, gravel-sand-silt mixtures
		GC	Clayey gravels, gravel-sand-clay mixtures
	Sands (more than 50% passing the No. 4 Sieve)	SW	Well graded sands, gravelly sands, little or no fines
		SP	Poorly graded sands, gravelly sands, little or no fines
		SM	Silty sands, sand-silt mixtures
		SC	Clayey sands, sand-clay mixtures
Fine Grained Soils (More than 50% of materail passes on the No. 200 Sieve)	Silts & Clays (LL less than 50)	ML	Inorganic silts, very fine sands, silty or clayey fine sandsor clayey silts with slight plasticity
		CL	Inorganic clays of low to medium plasticity, gravelly clays, sandy clays
		OL	Organic silts and organic silty clays of low plasticity
	Silts & Clays (LL greater than 50)	MH	Inorganic silts, micaceous or diatomaceous fine sandy or silty soils, plastic silts
		CH	Inorganic clays of high plasticity, fat clays
		OH	Organic clays of medium to high plasticity
	Highly Organic Soil	PEAT	Peat and other highly organic soils

Standard Pentration Test (SPT)
Resistance Correlations

Coarse Grained Soils

SPT
vs.
Relative Density

Blows/Ft	Relative Density
0 - 4	Very Loose
5 - 10	Loose
11 - 30	Medium Compact
31 - 50	Compact
Over 50	Very Compact

Fine Grained Soils

SPT
vs.
Consistency

Blows/Ft	Consistency
0 - 2	Very Soft
3 - 4	Soft
5 - 8	Medium Stiff
9 - 15	Stiff
16 - 30	Very Stiff
31 - 50	Hard
Over 50	Very Hard

DEPTH (FT.)	DESCRIPTION
0.0	
0.1	**Topsoil** - 1"
2.0	**Fill** - Brown clayey silty fine sand with traces of gravel and brick, moist, very compact, SM-SC
	Fill - Gray silty fine sand with traces of clay, gravel, brick and shell fragments, moist, compact, SM
	Same - wet, loose
6.0	
8.0	**Fill** - Gray clayey silty fine sand with traces of gravel and shell fragments, wet, very loose, SM-SC
	Fill - Brown silty fine sand with gravel, brick an traces of clay, wet, very loose, SM
12.0	
	Brownish gray silty clayey fine sand with traces of shell fragments, wet, very loose, SC
17.0	
	Gray silty fine sand with traces of shell fragments, wet, loose, SM
	Same - medium compact
	Same
	Same
	Same
	Same
50.5	Same
	BORING TERMINATED AT 50.5 FEET

STANDARD PENETRATION RESISTANCE

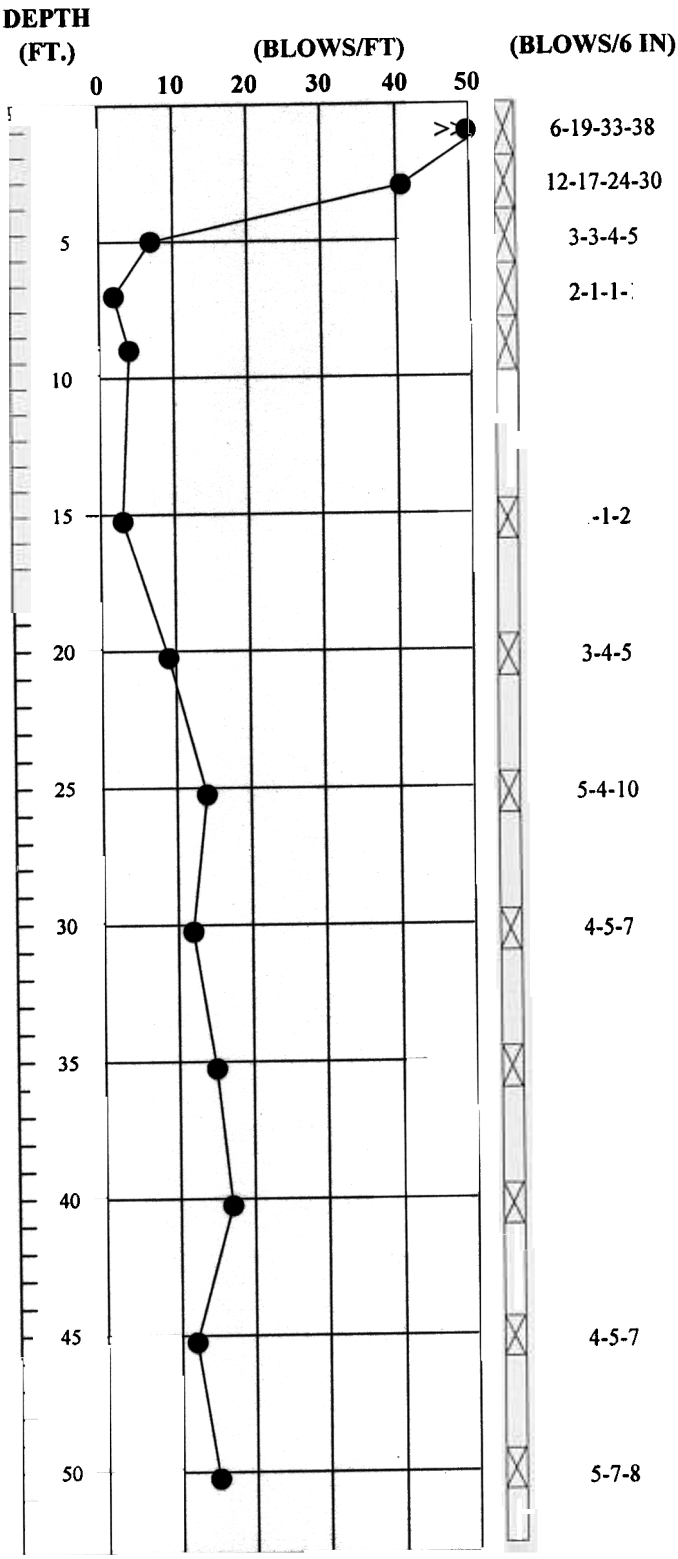

NOTES: ***Petroleum odor encountered in 4 to 10 ft. soil samples***

- Gradual Stratum Change
- Approximate Stratum Change
- Penetration Resistance (N - value)
- Standard Penetration Test
- Undisturbed Sample
- Groundwater Level at Time of Boring
- Stabilized Groundwater Level Reading

TEST BORING RECORD

BORING NUMBER	B-1
DATE DRILLED	May 20, 2002
PROJECT NUMBER	02-3101
PROJECT	Proposed Stormwater Pump Station
LOCATION	Langley Air Force Base, Hampton, VA

McCALLUM TESTING LABORATORIES, INC.

STANDARD PENETRATION RESISTANCE

DEPTH (FT.)	DESCRIPTION
0.0	Topsoil - 1"
	Fill - Brown silty fine sand with traces of clay, gravel, shell fragments and brick, moist, medium compact, SM
	Same
	Same - wet, loose
8.0	Same - gray, very loose
	Brown silty clayey fine sand, wet, very loose, SC
	Same - with traces of shell fragments, loose
0	
	Gray silty fine sand with traces of shell fragments, wet, medium compact, SM
	Same
27.0	
	Gray clayey silty fine sand with traces of shell fragments, wet, medium compact, SM-SC
32.0	
	Gray silty fine sand with traces of shell fragments, wet, medium compact, SM
	Same
	Same
50.5	Same
	BORING TERMINATED AT 50.5 FEET

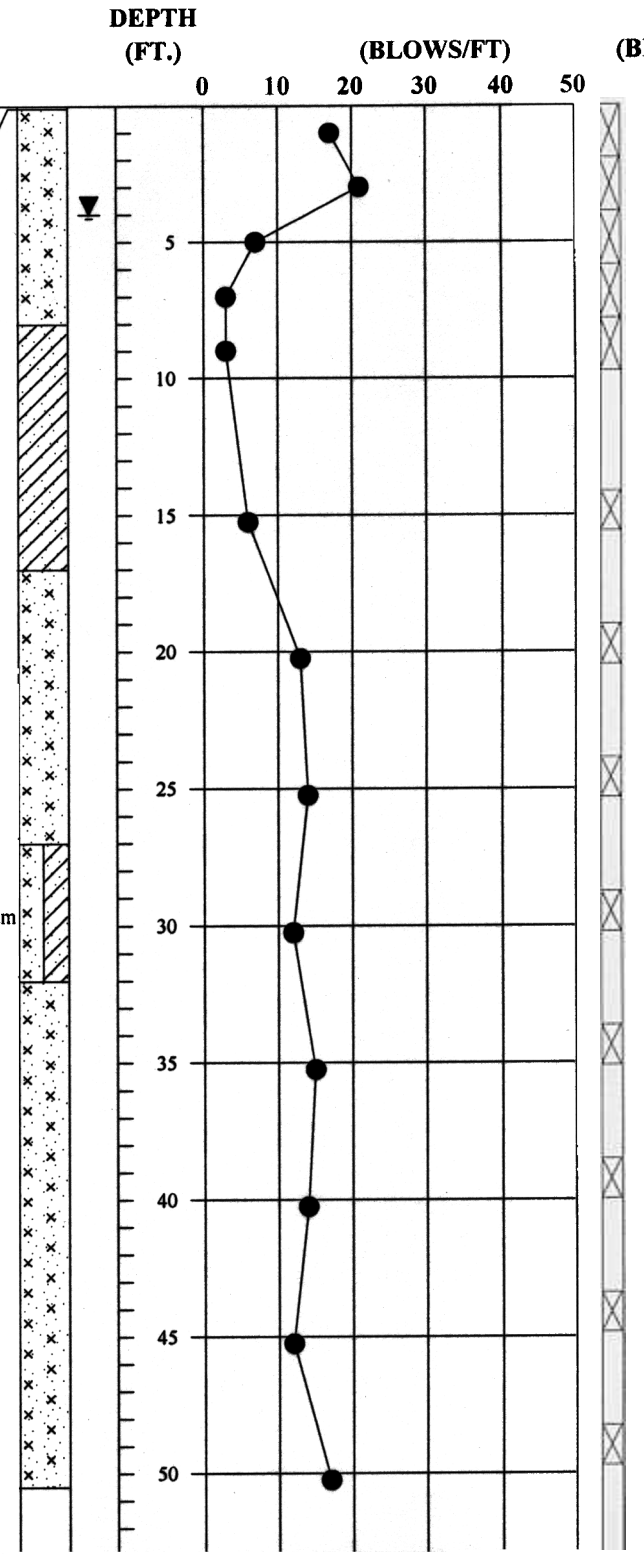

(BLOWS/6 IN)

5-8-9-8

8-10-11-12

3-2-1-1

2-1-2-1

5-6-6

NOTES:

- - - - - Gradual Stratum Change
— — — Approximate Stratum Change
● Penetration Resistance (N - value)
Standard Penetration Test
Undisturbed Sample
Groundwater Level at Time of Boring
Stabilized Groundwater Level Reading

TEST BORING RECORD

BORING NUMBER	B-2
DATE DRILLED	May 20, 2002
PROJECT NUMBER	02-3101
PROJECT	Proposed Stormwater Pump Station
LOCATION	Langley Air Force Base, Hampton, VA

McCALLUM TESTING LABORATORIES, INC.