SOLICITATION, OFFER, AND AWARD *(Construction, Alteration, or Repair)*	1. SOLICITATION NO. DACA65-02-R-0027	2. TYPE OF SOLICITATION [ ] SEALED BID (IFB) [X] NEGOTIATED *(RFP)*	3. DATE ISSUED 12-Aug-2002	PAGE OF PAGES 1 OF 118

IMPORTANT - The "offer" section on the reverse must be fully completed by offeror.

4. CONTRACT NO.	5. REQUISITION/PURCHASE REQUEST NO. W26GLG-2200-8661	6. PROJECT NO. MUHJ03-3004

7. ISSUED BY CODE DACA65	8. ADDRESS OFFER TO *(If Other Than Item 7)* CODE
CONTRACTING OFFICE (CA/CW) US ARMY ENGR DIST NORFOLK ATTN: CENAO-CT NORFOLK VA 23510-1096	**See Item 7**
TEL: FAX: (757) 441-7183	TEL: FAX:

9. FOR INFORMATION CALL:	A. NAME DEBORA S GRAY	B. TELEPHONE NO. *(Include area code)* *(NO COLLECT CALLS)* (757) 441-7551

SOLICITATION

NOTE: In sealed bid solicitations "offer" and "offeror" mean "bid" and "bidder".

10. THE GOVERNMENT REQUIRES PERFORMANCE OF THE WORK DESCRIBED IN THESE DOCUMENTS *(Title, identifying no., date):*

Flight Kitchen, Langley Air Force Base, VA

DACA65-02-R-0027, F-22 Flight Kitchen, Langley Air Force Base, VA

This procurement is for the solicitation of a Two-Phase firm fixed price contract for the Flight Kitchen, Langley Air Force Base, VIRGINIA. The contract will provide for the construction of a flight kitchen at Langley Air Force Base, VA. The contractor shall provide all labor, supervision, construction engineering and management, materials, equipment, tools, parts, supplies and transportation to perform all work described in the specifications.

THIS IS A HUBZONE SET ASIDE PROCUREMENT. NAICS CODE 23320

11. The Contractor shall begin performance within 30 calendar days and complete it within 360 calendar days after receiving [ ] award, [X] notice to proceed. This performance period is [X] mandatory, [ ] negotiable. *(See _____ .)*

12 A. THE CONTRACTOR MUST FURNISH ANY REQUIRED PERFORMANCE AND PAYMENT BONDS? *(If "YES," indicate within how many calendar days after award in Item 12B.)* [X] YES [ ] NO	12B. CALENDAR DAYS 10

13. ADDITIONAL SOLICITATION REQUIREMENTS:

A. Sealed offers in original and 4 copies to perform the work required are due at the place specified in Item 8 by 02:00 PM *(hour)* local time 11 Sep 2002 *(date).* If this is a sealed bid solicitation, offers must be publicly opened at that time. Sealed envelopes containing offers shall be marked to show the offeror's name and address, the solicitation number, and the date and time offers are due.

B. An offer guarantee [X] is, [ ] is not required.

C. All offers are subject to the (1) work requirements, and (2) other provisions and clauses incorporated in the solicitation in full text or by reference.

D. Offers providing less than 120 calendar days for Government acceptance after the date offers are due will not be considered and will be rejected.

SOLICITATION, OFFER, AND AWARD (Continued)

(Construction, Alteration, or Repair)

OFFER ***(Must be fully completed by offeror)***

14. NAME AND ADDRESS OF OFFEROR *(Include ZIP Code)*	15. TELEPHONE NO. *(Include area code)*
	16. REMITTANCE ADDRESS *(Include only if different than Item 14)* **See Item 14**
CODE / FACILITY CODE	

17. The offeror agrees to perform the work required at the prices specified below in strict accordance with the terms of this solicitation, if this offer is accepted by the Government in writing within _____ calendar days after the date offers are due. *(Insert any number equal to or greater than the minimum requirements stated in Item 13D. Failure to insert any number means the offeror accepts the minimum in Item 13D.)*

AMOUNTS	SEE SCHEDULE OF PRICES

18. The offeror agrees to furnish any required performance and payment bonds.

19. ACKNOWLEDGMENT OF AMENDMENTS

(The offeror acknowledges receipt of amendments to the solicitation -- give number and date of each)

AMENDMENT NO.										
DATE										

20A. NAME AND TITLE OF PERSON AUTHORIZED TO SIGN OFFER *(Type or print)*	20B. SIGNATURE	20C. OFFER DATE

AWARD ***(To be completed by Government)***

21. ITEMS ACCEPTED:

22. AMOUNT	23. ACCOUNTING AND APPROPRIATION DATA

24. SUBMIT INVOICES TO ADDRESS SHOWN IN *(4 copies unless otherwise specified)*	**ITEM**	25. OTHER THAN FULL AND OPEN COMPETITION PURSUANT TO ☐ 10 U.S.C. 2304(c) ☐ 41 U.S.C. 253(c)
26. ADMINISTERED BY CODE		27. PAYMENT WILL BE MADE BY: CODE

CONTRACTING OFFICER WILL COMPLETE ITEM 28 OR 29 AS APPLICABLE

☐ 28. NEGOTIATED AGREEMENT *(Contractor is required to sign this document and return _____ copies to issuing office.)* Contractor agrees to furnish and deliver all items or perform all work, requisitions identified on this form and any continuation sheets for the consideration stated in this contract. The rights and obligations of the parties to this contract shall be governed by (a) this contract award, (b) the solicitation, and (c) the clauses, representations, certifications, and specifications or incorporated by reference in or attached to this contract.

☐ 29. AWARD *(Contractor is not required to sign this document.)* Your offer on this solicitation, is hereby accepted as to the items listed. This award consummates the contract, which consists of (a) the Government solicitation and your offer, and (b) this contract award. No further contractual document is necessary.

30A. NAME AND TITLE OF CONTRACTOR OR PERSON AUTHORIZED TO SIGN *(Type or print)*		31A. NAME OF CONTRACTING OFFICER *(Type or print)* TEL: EMAIL:
30B. SIGNATURE	30C. DATE	31B. UNITED STATES OF AMERICA BY / 31C. AWARD DATE

Section 00010 - Solicitation Contract Form

ITEM NO	SUPPLIES/SERVICES	QUANTITY	UNIT	UNIT PRICE	AMOUNT
0001		1	Lump Sum		

FFP
Construct Flight Kitchen, complete including all work incidental thereto as shown on the drawings and specified exclusive of bid items 0002 and 0003.
PURCHASE REQUEST NUMBER: W26GLG-2200-8661

NET AMT

FOB: Destination

ITEM NO	SUPPLIES/SERVICES	QUANTITY	UNIT	UNIT PRICE	AMOUNT
0002		1	Lump Sum		

FFP
Sitework associated with Flight Kitchen, complete including all work incidental thereto as shown on the drawings and specified exclusive of bid items 0001 and 0003.

NET AMT

FOB: Destination

ITEM NO	SUPPLIES/SERVICES	QUANTITY	UNIT	UNIT PRICE	AMOUNT
0003		1	Lump Sum		
	FFP As-Built drawings for the Flight Kitchen, complete, including all work incidental thereto as shown on the drawings and specified exclusive of bid items 0001 and 0002.				
				NET AMT	

FOB: Destination

ITEM NO	SUPPLIES/SERVICES	QUANTITY	UNIT	UNIT PRICE	AMOUNT
0004					
	FFP TOTAL AMOUNT				
				NET AMT	

FOB: Destination

CLAUSES INCORPORATED BY FULL TEXT

52.204-6 DATA UNIVERSAL NUMBERING SYSTEM (DUNS) NUMBER (JUN 99)

(a) The offeror shall enter, in the block with its name and address on the cover page of its offer, the annotation "DUNS" followed by the DUNS number that identifies the offeror's name and address exactly as stated in the offer.

(b) If the offeror does not have a DUNS number, it should contact Dun and Bradstreet directly to obtain one. A DUNS number will be provided immediately by telephone at no charge to the offeror. For information on obtaining a DUNS number, the offeror, if located within the United States, should call Dun and Bradstreet at 1-800-333-0505. The offeror should be prepared to provide the following information:

(1) Company name.

(2) Company address.

(3) Company telephone number.

(4) Line of business.

(5) Chief executive officer/key manager.

(6) Date the company was started.

(7) Number of people employed by the company.

(8) Company affiliation.

(c) Offerors located outside the United States may obtain the location and phone number of the local Dun and Bradstreet Information Services office from the Internet Home Page at http://www.customerservice@dnb.com. If an offeror is unable to locate a local service center, it may send an e-mail to Dun and Bradstreet at globalinfo@mail.dnb.com.

(End of provision)

52.215-1 INSTRUCTIONS TO OFFERORS--COMPETITIVE ACQUISITION (MAY 2001)

(a) Definitions. As used in this provision--

“Discussions” are negotiations that occur after establishment of the competitive range that may, at the Contracting Officer's discretion, result in the offeror being allowed to revise its proposal.

“In writing or written” means any worded or numbered expression which can be read, reproduced, and later communicated, and includes electronically transmitted and stored information.

“Proposal modification” is a change made to a proposal before the solicitation's closing date and time, or made in response to an amendment, or made to correct a mistake at any time before award.

“Proposal revision” is a change to a proposal made after the solicitation closing date, at the request of or as allowed by a Contracting Officer as the result of negotiations.

“Time”, if stated as a number of days, is calculated using calendar days, unless otherwise specified, and will include Saturdays, Sundays, and legal holidays. However, if the last day falls on a Saturday, Sunday, or legal holiday, then the period shall include the next working day.

(b) Amendments to solicitations. If this solicitation is amended, all terms and conditions that are not amended remain unchanged. Offerors shall acknowledge receipt of any amendment to this solicitation by the date and time specified in the amendment(s).

(c) Submission, modification, revision, and withdrawal of proposals. (1) Unless other methods (e.g., electronic commerce or facsimile) are permitted in the solicitation, proposals and modifications to proposals shall be submitted in paper media in sealed envelopes or packages (i) addressed to the office specified in the solicitation, and (ii) showing the time and date specified for receipt, the solicitation number, and the name and address of the offeror. Offerors using commercial carriers should ensure that the proposal is marked on the outermost wrapper with the information in paragraphs (c)(1)(i) and (c)(1)(ii) of this provision.

(2) The first page of the proposal must show--

(i) The solicitation number;

(ii) The name, address, and telephone and facsimile numbers of the offeror (and electronic address if available);

(iii) A statement specifying the extent of agreement with all terms, conditions, and provisions included in the solicitation and agreement to furnish any or all items upon which prices are offered at the price set opposite each item;

(iv) Names, titles, and telephone and facsimile numbers (and electronic addresses if available) of persons authorized to negotiate on the offeror's behalf with the Government in connection with this solicitation; and

(v) Name, title, and signature of person authorized to sign the proposal. Proposals signed by an agent shall be accompanied by evidence of that agent's authority, unless that evidence has been previously furnished to the issuing office.

(3) Submission, modification, or revision, of proposals.

(i) Offerors are responsible for submitting proposals, and any modifications, or revisions, so as to reach the Government office designated in the solicitation by the time specified in the solicitation. If no time is specified in the solicitation, the time for receipt is 4:30 p.m., local time, for the designated Government office on the date that proposal or revision is due.

(ii)(A) Any proposal, modification, or revision received at the Government office designated in the solicitation after the exact time specified for receipt of offers is “late” and will not be considered unless it is received before award is made, the Contracting Officer determines that accepting the late offer would not unduly delay the acquisition; and--

(1) If it was transmitted through an electronic commerce method authorized by the solicitation, it was received at the initial point of entry to the Government infrastructure not later than 5:00 p.m. one working day prior to the date specified for receipt of proposals; or

(2) There is acceptable evidence to establish that it was received at the Government installation designated for receipt of offers and was under the Government's control prior to the time set for receipt of offers; or

(3) It is the only proposal received.

(B) However, a late modification of an otherwise successful proposal that makes its terms more favorable to the Government, will be considered at any time it is received and may be accepted.

(iii) Acceptable evidence to establish the time of receipt at the Government installation includes the time/date stamp of that installation on the proposal wrapper, other documentary evidence of receipt maintained by the installation, or oral testimony or statements of Government personnel.

(iv) If an emergency or unanticipated event interrupts normal Government processes so that proposals cannot be received at the office designated for receipt of proposals by the exact time specified in the solicitation, and urgent Government requirements preclude amendment of the solicitation, the time specified for receipt of proposals will be deemed to be extended to the same time of day specified in the solicitation on the first work day on which normal Government processes resume.

(v) Proposals may be withdrawn by written notice received at any time before award. Oral proposals in response to oral solicitations may be withdrawn orally. If the solicitation authorizes facsimile proposals, proposals may be withdrawn via facsimile received at any time before award, subject to the conditions specified in the provision at 52.215-5, Facsimile Proposals. Proposals may be withdrawn in person by an offeror or an authorized representative, if the identity of the person requesting withdrawal is established and the person signs a receipt for the proposal before award.

(4) Unless otherwise specified in the solicitation, the offeror may propose to provide any item or combination of items.

(5) Offerors shall submit proposals in response to this solicitation in English, unless otherwise permitted by the solicitation, and in U.S. dollars, unless the provision at FAR 52.225-17, Evaluation of Foreign Currency Offers, is included in the solicitation.

(6) Offerors may submit modifications to their proposals at any time before the solicitation closing date and time, and may submit modifications in response to an amendment, or to correct a mistake at any time before award.

(7) Offerors may submit revised proposals only if requested or allowed by the Contracting Officer.

(8) Proposals may be withdrawn at any time before award. Withdrawals are effective upon receipt of notice by the Contracting Officer.

(d) Offer expiration date. Proposals in response to this solicitation will be valid for the number of days specified on the solicitation cover sheet (unless a different period is proposed by the offeror).

(e) Restriction on disclosure and use of data. Offerors that include in their proposals data that they do not want disclosed to the public for any purpose, or used by the Government except for evaluation purposes, shall--

(1) Mark the title page with the following legend: This proposal includes data that shall not be disclosed outside the Government and shall not be duplicated, used, or disclosed--in whole or in part--for any purpose other than to evaluate this proposal. If, however, a contract is awarded to this offeror as a result of--or in connection with-- the submission of this data, the Government shall have the right to duplicate, use, or disclose the data to the extent provided in the resulting contract. This restriction does not limit the Government's right to use information contained in this data if it is obtained from another source without restriction. The data subject to this restriction are contained in sheets [insert numbers or other identification of sheets]; and

(2) Mark each sheet of data it wishes to restrict with the following legend: Use or disclosure of data contained on this sheet is subject to the restriction on the title page of this proposal.

(f) Contract award. (1) The Government intends to award a contract or contracts resulting from this solicitation to the responsible offeror(s) whose proposal(s) represents the best value after evaluation in accordance with the factors and subfactors in the solicitation.

(2) The Government may reject any or all proposals if such action is in the Government's interest.

(3) The Government may waive informalities and minor irregularities in proposals received.

(4) The Government intends to evaluate proposals and award a contract without discussions with offerors (except clarifications as described in FAR 15.306(a)). Therefore, the offeror's initial proposal should contain the offeror's best terms from a cost or price and technical standpoint. The Government reserves the right to conduct discussions if the Contracting Officer later determines them to be necessary. If the Contracting Officer determines that the number of proposals that would otherwise be in the competitive range exceeds the number at which an efficient competition can be conducted, the Contracting Officer may limit the number of proposals in the competitive range to the greatest number that will permit an efficient competition among the most highly rated proposals.

(5) The Government reserves the right to make an award on any item for a quantity less than the quantity offered, at the unit cost or prices offered, unless the offeror specifies otherwise in the proposal.

(6) The Government reserves the right to make multiple awards if, after considering the additional administrative costs, it is in the Government's best interest to do so.

(7) Exchanges with offerors after receipt of a proposal do not constitute a rejection or counteroffer by the Government.

(8) The Government may determine that a proposal is unacceptable if the prices proposed are materially unbalanced between line items or subline items. Unbalanced pricing exists when, despite an acceptable total evaluated price, the price of one or more contract line items is significantly overstated or understated as indicated by the application of cost or price analysis techniques. A proposal may be rejected if the Contracting Officer determines that the lack of balance poses an unacceptable risk to the Government.

(9) If a cost realism analysis is performed, cost realism may be considered by the source selection authority in evaluating performance or schedule risk.

(10) A written award or acceptance of proposal mailed or otherwise furnished to the successful offeror within the time specified in the proposal shall result in a binding contract without further action by either party.

(11) The Government may disclose the following information in postaward debriefings to other offerors:

(i) The overall evaluated cost or price and technical rating of the successful offeror;

(ii) The overall ranking of all offerors, when any ranking was developed by the agency during source selection;

(iii) A summary of the rationale for award; and

(iv) For acquisitions of commercial items, the make and model of the item to be delivered by the successful offeror.

(End of provision)

52.215-20 REQUIREMENTS FOR COST OR PRICING DATA OR INFORMATION OTHER THAN COST OR PRICING DATA (OCT 1997)

(a) Exceptions from cost or pricing data. (1) In lieu of submitting cost or pricing data, offerors may submit a written request for exception by submitting the information described in the following subparagraphs. The Contracting Officer may require additional supporting information, but only to the extent necessary to determine whether an exception should be granted, and whether the price is fair and reasonable.

(i) Identification of the law or regulation establishing the price offered. If the price is controlled under law by periodic rulings, reviews, or similar actions of a governmental body, attach a copy of the controlling document, unless it was previously submitted to the contracting office.

(ii) Commercial item exception. For a commercial item exception, the offeror shall submit, at a minimum, information on prices at which the same item or similar items have previously been sold in the commercial market that is adequate for evaluating the reasonableness of the price for this acquisition. Such information may include--

(A) For catalog items, a copy of or identification of the catalog and its date, or the appropriate pages for the offered items, or a statement that the catalog is on file in the buying office to which the proposal is being submitted. Provide a copy or describe current discount policies and price lists (published or unpublished), e.g., wholesale, original equipment manufacturer, or reseller. Also explain the basis of each offered price and its relationship to the established catalog price, including how the proposed price relates to the price of recent sales in quantities similar to the proposed quantities;

(B) For market-priced items, the source and date or period of the market quotation or other basis for market price, the base amount, and applicable discounts. In addition, describe the nature of the market;

(C) For items included on an active Federal Supply Service Multiple Award Schedule contract, proof that an exception has been granted for the schedule item.

(2) The offeror grants the Contracting Officer or an authorized representative the right to examine, at any time before award, books, records, documents, or other directly pertinent records to verify any request for an exception under this provision, and the reasonableness of price. For items priced using catalog or market prices, or law or regulation , access does not extend to cost or profit information or other data relevant solely to the offeror's determination of the prices to be offered in the catalog or marketplace.

(b) Requirements for cost or pricing data. If the offeror is not granted an exception from the requirement to submit cost or pricing data, the following applies:

(1) The offeror shall prepare and submit cost or pricing data and supporting attachments in accordance with Table 15-2 of FAR 15.408.

As soon as practicable after agreement on price, but before contract award (except for unpriced actions such as letter contracts), the offeror shall submit a Certificate of Current Cost or Pricing Data, as prescribed by FAR 15.406-2.

(End of provision)

52.216-1 TYPE OF CONTRACT (APR 1984)

The Government contemplates award of a firm fixed contract resulting from this solicitation.

(End of clause)

52.225-10 NOTICE OF BUY AMERICAN ACT REQUIREMENT--CONSTRUCTION MATERIALS (MAY 2002)

(a) Definitions. Construction material, domestic construction material, and foreign construction material, as used in this provision, are defined in the clause of this solicitation entitled "Buy American Act--Construction Materials" (Federal Acquisition Regulation (FAR) clause 52.225-9).

(b) Requests for determinations of inapplicability. An offeror requesting a determination regarding the inapplicability of the Buy American Act should submit the request to the Contracting Officer in time to allow a determination before submission of offers. The offeror shall include the information and applicable supporting data required by paragraphs (c) and (d) of the clause at FAR 52.225-9 in the request. If an offeror has not requested a determination regarding the inapplicability of the Buy American Act before submitting its offer, or has not received a response to a previous request, the offeror shall include the information and supporting data in the offer.

(c) Evaluation of offers. (1) The Government will evaluate an offer requesting exception to the requirements of the Buy American Act, based on claimed unreasonable cost of domestic construction material, by adding to the offered price the appropriate percentage of the cost of such foreign construction material, as specified in paragraph (b)(3)(i) of the clause at FAR 52.225-9.

(2) If evaluation results in a tie between an offeror that requested the substitution of foreign construction material based on unreasonable cost and an offeror that did not request an exception, the Contracting Officer will award to the offeror that did not request an exception based on unreasonable cost.

(d) Alternate offers.

(1) When an offer includes foreign construction material not listed by the Government in this solicitation in paragraph (b)(2) of the clause at FAR 52.225-9, the offeror also may submit an alternate offer based on use of equivalent domestic construction material.

(2) If an alternate offer is submitted, the offeror shall submit a separate Standard Form 1442 for the alternate offer, and a separate price comparison table prepared in accordance with paragraphs (c) and (d) of the clause at FAR 52.225-9 for the offer that is based on the use of any foreign construction material for which the Government has not yet determined an exception applies.

(3) If the Government determines that a particular exception requested in accordance with paragraph (c) of the clause at FAR 52.225-9 does not apply, the Government will evaluate only those offers based on use of the equivalent domestic construction material, and the offeror shall be required to furnish such domestic construction material. An offer based on use of the foreign construction material for which an exception was requested--

(i) Will be rejected as nonresponsive if this acquisition is conducted by sealed bidding; or

(ii) May be accepted if revised during negotiations.

(End of provision)

52.233-2 SERVICE OF PROTEST (AUG 1996)

(a) Protests, as defined in section 33.101 of the Federal Acquisition Regulation, that are filed directly with an agency, and copies of any protests that are filed with the General Accounting Office (GAO), shall be served on the Contracting Officer (addressed as follows) by obtaining written and dated acknowledgment of receipt from Chief, Contracting Office, U.S. Army Engineer District, 803 Front Street, ATTN: CENAO-SS-C, Norfolk, VA 23510-1096.

(b) The copy of any protest shall be received in the office designated above within one day of filing a protest with the GAO.

(End of provision)

52.236-27 SITE VISIT (CONSTRUCTION) (FEB 1995) – ALTERNATE I (FEB 1995)

(a) The clauses at 52.236-2, Differing Site Conditions, and 52.236-3, Site Investigations and Conditions Affecting the Work, will be included in any contract awarded as a result of this solicitation. Accordingly, offerors or quoters are urged and expected to inspect the site where the work will be performed.

(b) An organized site visit has been scheduled for--
August 22, 2002 at 1:00 pm
(c) Participants will meet at--
Proposers should show up at the LaSalle gate by 12:40. Corps rep will meet them there and sponsor them on Base. At 12:50 we will leave the gate and caravan to the simulator site. They need to make sure they are there no later than 12:40 so that they can be checked in by the departure time of 12:50. Site viewing only. No questions will be answered. Proposers are strongly encouraged to attend the site visit because the Resident Office will not be able to accommodate individual visits at another time.

(End of provision)

52.252-5 AUTHORIZED DEVIATIONS IN PROVISIONS (APR 1984)

(a) The use in this solicitation of any Federal Acquisition Regulation (48 CFR Chapter 1) provision with an authorized deviation is indicated by the addition of"(DEVIATION)" after the date of the provision.

(b) The use in this solicitation of any _____ (48 CFR Chapter _____) provision with an authorized deviation is indicated by the addition of "(DEVIATION)" after the name of the regulation.

(End of provision)

252.204-7001 COMMERCIAL AND GOVERNMENT ENTITY (CAGE) CODE REPORTING (AUG 1999)

(a) The offeror is requested to enter its CAGE code on its offer in the block with its name and address. The CAGE code entered must be for that name and address. Enter “CAGE” before the number.

(b) If the offeror does not have a CAGE code, it may ask the Contracting Officer to request one from the Defense Logistics Information Service (DLIS). The Contracting Officer will--

(1) Ask the Contractor to complete section B of a DD Form 2051, Request for Assignment of a Commercial and Government Entity (CAGE) Code;

(2) Complete section A and forward the form to DLIS; and

(3) Notify the Contractor of its assigned CAGE code.

(c) Do not delay submission of the offer pending receipt of a CAGE code.

(End of provision)

E4LC02 AWARD TO RESPONSIBLE OFFEROR

Responsibility will be determined, prior to award, by the Contracting Officer, either by performing a pre-award survey or conclusions based on a previous pre-award survey and/or any performance data available. A pre-award survey will be performed and the offeror will be required to show that he has the necessary capital, experience, and owns or can procure the necessary plant or other resources to commence the work at the time prescribed in the specifications and thereafter to prosecute and complete the work safely and satisfactorily within the time specified.

E4LC04 EVIDENCE OF AUTHORITY TO SIGN OFFERS

Evidence of the authority of individuals signing offers to submit firm offers on behalf of the offeror is required except where the offer is signed, and shows that it is so signed, by: the President, Vice-President, or Secretary of an incorporated offeror; a partner in the case of a partnership; or the owner in the case of a sole proprietorship. Failure to submit with the offer satisfactory evidence of the authority of all other persons may be cause for rejection of the offer as invalid or nonresponsive.

E4LC06 INSPECTION OF THE SITE

Prospective bidders are invited to visit the site of the work in order to acquaint themselves as to site conditions and other problems incident to the prosecution of the work. Arrangements for inspection of the site shall be made through the Office the Area Engineer identified in the clause 52.236-27, entitled "SITE VISIT (CONSTRUCTION)."

E4LC08 MAGNITUDE OF CONSTRUCTION PROJECT

The estimated contract price of the work for this project is estimated between $1,000,000.00 and $5,000,000.00.

E4LC09 BASIS OF AWARD

All blanks must be filled in by the bidder. A single award will be made to the lowest responsible, responsive bidder on the basis of the total price bid. Prior to making an award, a pre-award survey will be made and the low bidder will be required to show that he has the necessary capital, experience, and owns or can procure the necessary plant to commence the work at the time prescribed in the specifications and thereafter to prosecute and complete the work safely and satisfactorily within the time specified.

E4LC10 UNBALANCED OFFERS

Any offer which is materially unbalanced as to prices for the Base Items and the Optional Items may be rejected as non-responsive or otherwise not considered for award. An unbalanced offer is one which is based on prices significantly less than cost for some work and prices which are significantly overstated for other work.

E4LC13 PERFORMANCE OF WORK BY CONTRACTOR

Offeror's attention is directed to FAR 52.236-1, "Performance of Work by Contractor." Contractor is required to furnish a description of the work which will be performed by his own organization, (e.g., earthwork, paving, etc.), the percentage of the total work this represents, and the estimated cost thereof. Such description of work to be performed by the contractor's own organization shall be provided to the Contracting Officer within 10 days of contract award.

E4LC23 INCURRING COSTS

The Government is not liable for any costs incurred by the offeror submitting an offer in response to this solicitation.

E4LC27 REQUIREMENT FOR "PAYMENT AND PERFORMANCE BONDS" OR "PAYMENT BONDS ONLY"

If the resulting contract is awarded for an amount in excess of $100,000, the contractor shall be required to provide both payment and performance bonds in accordance with FAR 52.228-15, "Performance and Payment Bonds--Construction." FAR 52.228-15 applies only to those contracts awarded for an amount in excess of $100,000.

If the resulting contract is awarded for an amount in excess of $25,000 but no more than $100,000, the contractor shall not be required to provide a performance bond. The required payment bond shall be provided in accordance with FAR 52.228-13, "Alternative Payment Protections." FAR 52.228-13 applies only to those contracts awarded for an amount in excess of $25,000 by no more than $100,000. Neither payment nor performance bonds are required for contracts awarded for an amount less than $25,000.

E4LC31 SOLICITATION ENVELOPES

Envelopes containing solicitation documents must be sealed and marked with the following information:

SOLICITATION NO.:

BRIEF DESCRIPTION:

CLOSING DATE AND TIME:

E4LC58 BID GUARANTEE (SEP 1996)

(a) Failure to furnish a bid guarantee in the proper form and amount, by the time set for opening of bids, may be cause for rejection of the bid.

(b) The bidder shall furnish a bid guarantee in the form of a firm commitment, e.g., bid bond supported by good and sufficient surety or sureties acceptable to the Government, postal money order, certified check, cashier's check, irrevocable letter of credit, or, under Treasury Department regulations, certain bonds or notes of the United States. The Contracting Officer will return bid guarantees, other than bid bonds, (1) to unsuccessful bidders as soon as practicable after the opening of bids, and (2) to the successful bidder upon execution of contractual documents and bonds (including any necessary coinsurance or reinsurance agreements), as required by the bid as accepted.

(c) The amount of the bid guarantee shall be 20 percent of the bid price or $3,000,000, whichever is less.

(d) If the successful bidder, upon acceptance of its bid by the Government within the period specified for acceptance, fails to execute all contractual documents or furnish executed bond(s) within 10 days after receipt of the forms by the bidder, the Contracting Officer may terminate the contract for default.

(e) In the event the contract is terminated for default, the bidder is liable for any cost of acquiring the work that exceeds the amount of its bid, and the bid guarantee is available to offset the difference.

(End of provision)

Section 00600 - Representations & Certifications

CLAUSES INCORPORATED BY FULL TEXT

52.203-2 CERTIFICATE OF INDEPENDENT PRICE DETERMINATION (APR 1985)

(a) The offeror certifies that --

(c) The prices in this offer have been arrived at independently, without, for the purpose of restricting competition, any consultation, communication, or agreement with any other offeror or competitor relating to –

(1) Those prices,

(i) The intention to submit an offer, or

(iii) The methods of factors used to calculate the prices offered:

(2) The prices in this offer have not been and will not be knowingly disclosed by the offeror, directly or indirectly, to any other offeror or competitor before bid opening (in the case of a sealed bid solicitation) or contract award (in the case of a negotiated solicitation) unless otherwise required by law; and

(3) No attempt has been made or will be made by the offeror to induce any other concern to submit or not to submit an offer for the purpose of restricting competition.

(b) Each signature on the offer is considered to be a certification by the signatory that the signatory --

(1) Is the person in the offeror's organization responsible for determining the prices offered in this bid or proposal, and that the signatory has not participated and will not participate in any action contrary to subparagraphs (a)(1) through (a)(3) of this provision; or

(2) (i) Has been authorized, in writing, to act as agent for the following principals in certifying that those principals have not participated, and will not participate in any action contrary to subparagraphs (a)(1) through (a)(3) of this provison _____ (insert full name of person(s) in the offeror's organization responsible for determining the prices offered in this bid or proposal, and the title of his or her position in the offeror's organization);

(ii) As an authorized agent, does certify that the principals named in subdivision (b)(2)(i) above have not participated, and will not participate, in any action contrary to subparagraphs (a)(1) through (a)(3) above; and

(iii) As an agent, has not personally participated, and will not participate, in any action contrary to subparagraphs (a)(1) through (a)(3) of this provision.

(c) If the offeror deletes or modifies subparagraph (a)(2) of this provision, the offeror must furnish with its offer a signed statement setting forth in detail the circumstances of the disclosure.

(End of provision)

52.203-11 CERTIFICATION AND DISCLOSURE REGARDING PAYMENTS TO INFLUENCE CERTAIN FEDERAL TRANSACTIONS (APR 1991)

(a) The definitions and prohibitions contained in the clause, at FAR 52.203-12, Limitation on Payments to Influence Certain Federal Transactions, included in this solicitation, are hereby incorporated by reference in paragraph (b) of this Certification.

(b) The offeror, by signing its offer, hereby certifies to the best of his or her knowledge and belief that on or after December 23, 1989,--

(1) No Federal appropriated funds have been paid or will be paid to any person for influencing or attempting to influence an officer or employee of any agency, a Member of Congress, an officer or employee of Congress, or an employee of a Member of Congress on his or her behalf in connection with the awarding of any Federal contract, the making of any Federal grant, the making of any Federal loan, the entering into of any cooperative agreement, and the extension, continuation, renewal, amendment or modification of any Federal contract, grant, loan, or cooperative agreement;

(2) If any funds other than Federal appropriated funds (including profit or fee received under a covered Federal transaction) have been paid, or will be paid to any person for influencing or attempting to influence an officer or employee of any agency, a Member of Congress, an officer or employee of Congress or an employee of a Member of Congress on his or her behalf in connection with this solicitation, the offeror shall complete and submit, with its offer, OMB standard form LLL, Disclosure of Lobbying Activities, to the Contracting Officer; and

(3) He or she will include the language of this certification in all subcontract awards at any tier and require that all recipients of subcontract awards in excess of $100,000 shall certify and disclose accordingly.

(d) Submission of this certification and disclosure is a prerequisite for making or entering into this contract imposed by section 1352, title 31, United States Code. Any person who makes an expenditure prohibited under this provision, shall be subject to a civil penalty of not less than $10,000, and not more than $100,000, for each such failure.

(End of provision)

52.204-3 TAXPAYER IDENTIFICATION (OCT 1998)

(a) Definitions.

“Common parent,” as used in this provision, means that corporate entity that owns or controls an affiliated group of corporations that files its Federal income tax returns on a consolidated basis, and of which the offeror is a member.

“Taxpayer Identification Number (TIN),” as used in this provision, means the number required by the Internal Revenue Service (IRS) to be used by the offeror in reporting income tax and other returns. The TIN may be either a Social Security Number or an Employer Identification Number.

(b) All offerors must submit the information required in paragraphs (d) through (f) of this provision to comply with debt collection requirements of 31 U.S.C. 7701(c) and 3325(d), reporting requirements of 26 U.S.C. 6041, 6041A, and 6050M, and implementing regulations issued by the IRS. If the resulting contract is subject to the payment reporting requirements described in Federal Acquisition Regulation (FAR) 4.904, the failure or refusal by the offeror to furnish the information may result in a 31 percent reduction of payments otherwise due under the contract.

(c) The TIN may be used by the Government to collect and report on any delinquent amounts arising out of the offeror's relationship with the Government (31 U.S.C. 7701(c)(3)). If the resulting contract is subject to the

payment reporting requirements described in FAR 4.904, the TIN provided hereunder may be matched with IRS records to verify the accuracy of the offeror's TIN.

(d) Taxpayer Identification Number (TIN).

___ TIN:._____

___ TIN has been applied for.

___ TIN is not required because:

___ Offeror is a nonresident alien, foreign corporation, or foreign partnership that does not have income effectively connected with the conduct of a trade or business in the United States and does not have an office or place of business or a fiscal paying agent in the United States;

___ Offeror is an agency or instrumentality of a foreign government;

___ Offeror is an agency or instrumentality of the Federal Government.

(e) Type of organization.

___ Sole proprietorship;

___ Partnership;

___ Corporate entity (not tax-exempt);

___ Corporate entity (tax-exempt);

___ Government entity (Federal, State, or local);

___ Foreign government;

___ International organization per 26 CFR 1.6049-4;

___ Other _____

(f) Common parent.

___ Offeror is not owned or controlled by a common parent as defined in paragraph (a) of this provision.

___ Name and TIN of common parent:

Name _____

TIN _____

(End of provision)

52.204-5 WOMEN-OWNED BUSINESS (OTHER THAN SMALL BUSINESS) (MAY 1999)

(a) Definition. Women-owned business concern, as used in this provision, means a concern that is at least 51 percent owned by one or more women; or in the case of any publicly owned business, at least 51 percent of its stock is owned by one or more women; and whose management and daily business operations are controlled by one or more women.

(b) Representation. [Complete only if the offeror is a women-owned business concern and has not represented itself as a small business concern in paragraph (b)(1) of FAR 52.219-1, Small Business Program Representations, of this solicitation.] The offeror represents that it ( ) is a women-owned business concern.

(End of provision)

52.209-5 CERTIFICATION REGARDING DEBARMENT, SUSPENSION, PROPOSED DEBARMENT, AND OTHER RESPONSIBILITY MATTERS (DEC 2001)

(a)(1) The Offeror certifies, to the best of its knowledge and belief, that--

(i) The Offeror and/or any of its Principals--

(A) Are ( ) are not ( ) presently debarred, suspended, proposed for debarment, or declared ineligible for the award of contracts by any Federal agency;

(B) Have ( ) have not ( ), within a three-year period preceding this offer, been convicted of or had a civil judgment rendered against them for: commission of fraud or a criminal offense in connection with obtaining, attempting to obtain, or performing a public (Federal, state, or local) contract or subcontract; violation of Federal or state antitrust statutes relating to the submission of offers; or commission of embezzlement, theft, forgery, bribery, falsification or destruction of records, making false statements, tax evasion, or receiving stolen property; and

(C) Are ( ) are not ( ) presently indicted for, or otherwise criminally or civilly charged by a governmental entity with, commission of any of the offenses enumerated in subdivision (a)(1)(i)(B) of this provision.

(ii) The Offeror has ( ) has not ( ), within a three-year period preceding this offer, had one or more contracts terminated for default by any Federal agency.

(2) "Principals," for the purposes of this certification, means officers; directors; owners; partners; and, persons having primary management or supervisory responsibilities within a business entity (e.g., general manager; plant manager; head of a subsidiary, division, or business segment, and similar positions).

THIS CERTIFICATION CONCERNS A MATTER WITHIN THE JURISDICTION OF AN AGENCY OF THE UNITED STATES AND THE MAKING OF A FALSE, FICTITIOUS, OR FRAUDULENT CERTIFICATION MAY RENDER THE MAKER SUBJECT TO PROSECUTION UNDER SECTION 1001, TITLE 18, UNITED STATES CODE.

(b) The Offeror shall provide immediate written notice to the Contracting Officer if, at any time prior to contract award, the Offeror learns that its certification was erroneous when submitted or has become erroneous by reason of changed circumstances.

(c) A certification that any of the items in paragraph (a) of this provision exists will not necessarily result in withholding of an award under this solicitation. However, the certification will be considered in connection with a determination of the Offeror's responsibility. Failure of the Offeror to furnish a certification or provide such additional information as requested by the Contracting Officer may render the Offeror nonresponsible.

(d) Nothing contained in the foregoing shall be construed to require establishment of a system of records in order to render, in good faith, the certification required by paragraph (a) of this provision. The knowledge and information of an Offeror is not required to exceed that which is normally possessed by a prudent person in the ordinary course of business dealings.

(e) The certification in paragraph (a) of this provision is a material representation of fact upon which reliance was placed when making award. If it is later determined that the Offeror knowingly rendered an erroneous certification, in addition to other remedies available to the Government, the Contracting Officer may terminate the contract resulting from this solicitation for default.

(End of provision)

52.219-1 SMALL BUSINESS PROGRAM REPRESENTATIONS (APR 2002)

(a)(1) The North American Industry Classification System (NAICS) code for this acquisition is 23320.

(2) The small business size standard is $27.5 million.

(3) The small business size standard for a concern which submits an offer in its own name, other than on a construction or service contract, but which proposes to furnish a product which it did not itself manufacture, is 500 employees.

(b) Representations. (1) The offeror represents as part of its offer that it ( ) is, ( ) is not a small business concern.

(2) (Complete only if the offeror represented itself as a small business concern in paragraph (b)(1) of this provision.) The offeror represents, for general statistical purposes, that it ( ) is, ( ) is not a small disadvantaged business concern as defined in 13 CFR 124.1002.

(3) (Complete only if the offeror represented itself as a small business concern in paragraph (b)(1) of this provision.) The offeror represents as part of its offer that it ( ) is, ( ) is not a women-owned small business concern.

(4) (Complete only if the offeror represented itself as a small business concern in paragraph (b)(1) of this provision.) The offeror represents as part of its offer that it ( ) is, ( ) is not a veteran-owned small business concern.

(5) (Complete only if the offeror represented itself as a veteran-owned small business concern in paragraph (b)(4) of this provision.) The offeror represents as part of its offer that it ( ) is, ( ) is not a service-disabled veteran-owned small business concern.

(6) (Complete only if the offeror represented itself as a small business concern in paragraph (b)(1) of this provision.) The offeror represents, as part of its offer, that--

(i) It ( ) is, ( ) is not a HUBZone small business concern listed, on the date of this representation, on the List of Qualified HUBZone Small Business Concerns maintained by the Small Business Administration, and no material change in ownership and control, principal office, or HUBZone employee percentage has occurred since it was certified by the Small Business Administration in accordance with 13 CFR part 126; and

(ii) It ( ) is, ( ) is not a joint venture that complies with the requirements of 13 CFR part 126, and the representation in paragraph (b)(6)(i) of this provision is accurate for the HUBZone small business concern or

concerns that are participating in the joint venture. (The offeror shall enter the name or names of the HUBZone small business concern or concerns that are participating in the joint venture:_____.) Each HUBZone small business concern participating in the joint venture shall submit a separate signed copy of the HUBZone representation.

(c) Definitions. As used in this provision--

Service-disabled veteran-owned small business concern--

(1) Means a small business concern--

(i) Not less than 51 percent of which is owned by one or more service-disabled veterans or, in the case of any publicly owned business, not less than 51 percent of the stock of which is owned by one or more service-disabled veterans; and

(ii) The management and daily business operations of which are controlled by one or more service-disabled veterans or, in the case of a veteran with permanent and severe disability, the spouse or permanent caregiver of such veteran.

(2) Service-disabled veteran means a veteran, as defined in 38 U.S.C. 101(2), with a disability that is service-connected, as defined in 38 U.S.C. 101(16).

"Small business concern," means a concern, including its affiliates, that is independently owned and operated, not dominant in the field of operation in which it is bidding on Government contracts, and qualified as a small business under the criteria in 13 CFR Part 121 and the size standard in paragraph (a) of this provision.

Veteran-owned small business concern means a small business concern--

(1) Not less than 51 percent of which is owned by one or more veterans (as defined at 38 U.S.C. 101(2)) or, in the case of any publicly owned business, not less than 51 percent of the stock of which is owned by one or more veterans; and

(2) The management and daily business operations of which are controlled by one or more veterans.

"Women-owned small business concern," means a small business concern --

(1) That is at least 51 percent owned by one or more women; in the case of any publicly owned business, at least 51 percent of the stock of which is owned by one or more women; and

(2) Whose management and daily business operations are controlled by one or more women.

(d) Notice.

(1) If this solicitation is for supplies and has been set aside, in whole or in part, for small business concerns, then the clause in this solicitation providing notice of the set-aside contains restrictions on the source of the end items to be furnished.

(2) Under 15 U.S.C. 645(d), any person who misrepresents a firm's status as a small, HUBZone small, small disadvantaged, or women-owned small business concern in order to obtain a contract to be awarded under the preference programs established pursuant to section 8(a), 8(d), 9, or 15 of the Small Business Act or any other provision of Federal law that specifically references section 8(d) for a definition of program eligibility, shall--

(i) Be punished by imposition of fine, imprisonment, or both;

(ii) Be subject to administrative remedies, including suspension and debarment; and

(iii) Be ineligible for participation in programs conducted under the authority of the Act.

(End of provision)

52.219-19 SMALL BUSINESS CONCERN REPRESENTATION FOR THE SMALL BUSINESS COMPETITIVENESS DEMONSTRATION PROGRAM (OCT 2000)

(a) Definition.

"Emerging small business" as used in this solicitation, means a small business concern whose size is no greater than 50 percent of the numerical size standard applicable to the North American Industry Classification System (NAICS) code assigned to a contracting opportunity.

(b) [Complete only if the Offeror has represented itself under the provision at 52.219-1 as a small business concern under the size standards of this solicitation.] The Offeror [ ] is, [ ] is not an emerging small business.

(c) (Complete only if the Offeror is a small business or an emerging small business, indicating its size range.)

Offeror's number of employees for the past 12 months (check this column if size standard stated in solicitation is expressed in terms of number of employees) or Offeror's average annual gross revenue for the last 3 fiscal years (check this column if size standard stated in solicitation is expressed in terms of annual receipts). (Check one of the following.)

No. of Employees	Avg. Annual Gross Revenues
____ 50 or fewer	____ $1 million or less
____ 51 - 100	____ $1,000,001 - $2 million
____ 101 - 250	____ $2,000,001 - $3.5 million
____ 251 - 500	____ $3,500,001 - $5 million
____ 501 - 750	____ $5,000,001 - $10 million
____ 751 - 1,000	____ $10,000,001 - $17 million
____ Over 1,000	____ Over $17 million

(End of provision)

52.222-22 PREVIOUS CONTRACTS AND COMPLIANCE REPORTS (FEB 1999)

The offeror represents that --

(a) ( ) It has, ( ) has not participated in a previous contract or subcontract subject to the Equal Opportunity clause of this solicitation;

(b) ( ) It has, ( ) has not, filed all required compliance reports; and

(c) Representations indicating submission of required compliance reports, signed by proposed subcontractors, will be obtained before subcontract awards.

(End of provision)

52.222-25 AFFIRMATIVE ACTION COMPLIANCE (APR 1984)

The offeror represents that

(a) [ ] it has developed and has on file, [ ] has not developed and does not have on file, at each establishment, affirmative action programs required by the rules and regulations of the Secretary of Labor (41 CFR 60-1 and 60-2), or

(b) [ ] has not previously had contracts subject to the written affirmative action programs requirement of the rules and regulations of the Secretary of Labor.

(End of provision)

52.223-13 CERTIFICATION OF TOXIC CHEMICAL RELEASE REPORTING (OCT 2000)

(a) Submission of this certification is a prerequisite for making or entering into this contract imposed by Executive Order 12969, August 8, 1995.

(b) By signing this offer, the offeror certifies that--

(1) As the owner or operator of facilities that will be used in the performance of this contract that are subject to the filing and reporting requirements described in section 313 of the Emergency Planning and Community Right-to-Know Act of 1986 (EPCRA) (42 U.S.C. 11023) and section 6607 of the Pollution Prevention Act of 1990 (PPA) (42 U.S.C. 13106), the offeror will file and continue to file for such facilities for the life of the contract the Toxic Chemical Release Inventory Form (Form R) as described in sections 313(a) and (g) of EPCRA and section 6607 of PPA; or

(2) None of its owned or operated facilities to be used in the performance of this contract is subject to the Form R filing and reporting requirements because each such facility is exempt for at least one of the following reasons: (Check each block that is applicable.)

( ) (i) The facility does not manufacture, process or otherwise use any toxic chemicals listed under section 313(c) of EPCRA, 42 U.S.C. 11023(c);

( ) (ii) The facility does not have 10 or more full-time employees as specified in section 313.(b)(1)(A) of EPCRA 42 U.S.C. 11023(b)(1)(A);

( ) (iii) The facility does not meet the reporting thresholds of toxic chemicals established under section 313(f) of EPCRA, 42 U.S.C. 11023(f) (including the alternate thresholds at 40 CFR 372.27, provided an appropriate certification form has been filed with EPA);

( ) (iv) The facility does not fall within Standard Industrial Classification Code (SIC) major groups 20 through 39 or their corresponding North American Industry Classification System (NAICS) sectors 31 through 33; or

( ) (v) The facility is not located within any State of the United States, the District of Columbia, the Commonwealth of Puerto Rico, Guam, American Samoa, the United States Virgin Islands, the Northern Mariana Islands, or any other territory or possession over which the United States has jurisdiction.

(End of clause)

252.209-7001 DISCLOSURE OF OWNERSHIP OR CONTROL BY THE GOVERNMENT OF A TERRORIST COUNTRY (MAR 1998)

(a) "Definitions."

As used in this provision --

(a) "Government of a terrorist country" includes the state and the government of a terrorist country, as well as any political subdivision, agency, or instrumentality thereof.

(2) "Terrorist country" means a country determined by the Secretary of State, under section 6(j)(1)(A) of the Export Administration Act of 1979 (50 U.S.C. App. 2405(j)(i)(A)), to be a country the government of which has repeatedly provided support for such acts of international terrorism. As of the date of this provision, terrorist countries include: Cuba, Iran, Iraq, Libya, North Korea, Sudan, and Syria.

(3) "Significant interest" means --

(i) Ownership of or beneficial interest in 5 percent or more of the firm's or subsidiary's securities. Beneficial interest includes holding 5 percent or more of any class of the firm's securities in "nominee shares," "street names," or some other method of holding securities that does not disclose the beneficial owner;

(ii) Holding a management position in the firm, such as a director or officer;

(iii) Ability to control or influence the election, appointment, or tenure of directors or officers in the firm;

(iv) Ownership of 10 percent or more of the assets of a firm such as equipment, buildings, real estate, or other tangible assets of the firm; or

(v) Holding 50 percent or more of the indebtness of a firm.

(b) "Prohibition on award."

In accordance with 10 U.S.C. 2327, no contract may be awarded to a firm or a subsidiary of a firm if the government of a terrorist country has a significant interest in the firm or subsidiary or, in the case of a subsidiary, the firm that owns the subsidiary, unless a waiver is granted by the Secretary of Defense.

(c) "Disclosure."

If the government of a terrorist country has a significant interest in the Offeror or a subsidiary of the Offeror, the Offeror shall disclosure such interest in an attachment to its offer. If the Offeror is a subsidiary, it shall also disclose any significant interest the government of a terrorist country has in any firm that owns or controls the subsidiary. The disclosure shall include --

(1) Identification of each government holding a significant interest; and

(2) A description of the significant interest held by each government.

(End of provision)

252.247-7022 REPRESENTATION OF EXTENT OF TRANSPORTATION BY SEA (AUG 1992)

(a) The Offeror shall indicate by checking the appropriate blank in paragraph (b) of this provision whether transportation of supplies by sea is anticipated under the resultant contract. The term supplies is defined in the Transportation of Supplies by Sea clause of this solicitation.

(b) Representation. The Offeror represents that it:

____ (1) Does anticipate that supplies will be transported by sea in the performance of any contract or subcontract resulting from this solicitation.

____ (2) Does not anticipate that supplies will be transported by sea in the performance of any contract or subcontract resulting from this solicitation.

(c) Any contract resulting from this solicitation will include the Transportation of Supplies by Sea clause. If the Offeror represents that it will not use ocean transportation, the resulting contract will also include the Defense FAR Supplement clause at 252.247-7024, Notification of Transportation of Supplies by Sea.

(End of provision)

E4LC01 CORPORATE CERTIFICATE

Note: Contractor, if a corporation, should cause the following certificate to be executed under its corporate seal, provided that the same officer shall not execute both the contract and the certificate.

CERTIFICATE

I, _____, certify that I am

_____ of the corporation named as Contractor herein, that

_____, was then the _____ of said

corporation; that said contract was duly signed for and in behalf of said corporation of authority

of its governing body, and is within the scope of its corporate powers.

_____
(Name of Corporation)

_____
(Signature)

(Corporate Seal)

NOTE: A CORPORATE OFFICER OTHER THAN THE OFFICER SIGNING THE SOLICITATION MUST FILL OUT AND SIGN THIS FORM.

E4LC01B CERTIFICATE OF AUTHORITY

The undersigned:
_____
(Names of Partners)

do hereby certify that they are the individual partners who comprise the partnership of

_____
(Name of Partnership)

which firm has its office at
_____
(Address of Partnership)

that _____, one of the said partners, is hereby
(Name of Partner)

authorized to sign contracts between said partnership and the United States Government

and any modifications of such contracts on behalf of and in the name of the said

partnership.

In witness whereof the undersigned have executed this instrument this

_____ day of _____ 19___.

WITNESSES:

Name Address

(1) _____ _____

_____

(Partner)

(2) _____ _____

(1) _____ _____

_____

(Partner)

(2) _____ _____

(1) _____ _____

_____

(Partner)

(2) _____ _____

NOTE: 2 WITNESSES FOR EACH SIGNATURE

E4LC17 COMMERCIAL AND GOVERNMENT ENTITY (CAGE) CODE REPORTING

(a) The Offeror is requested to enter its CAGE code in the space provided below. The CAGE code entered must be for that name and address.

(b) If the Offeror does not have a CAGE code, it may ask the Contracting Officer to request one in accordance with the provisions of DFARS 52.204-7001 in the section of this solicitation entitled "Instructions to Bidders."

(c) Do not delay submission of the offer pending receipt of a CAGE code.

CAGE Code: __ __ __ __ __

( ) UNKNOWN

E4LC18 CONTRACTOR IDENTIFICATION NUMBER

The offeror is to supply his/her Contractor Identification Number, also known as the Data Universal Numbering System (DUNS) number, in the space provided below:

DUNS: __ __ __ __ __ __ __ __ __

This number can be obtained by following the instructions in FAR Clause 52.204-0006, which appears in Section L or Section 00100 of this document.

CLAUSES INCORPORATED BY FULL TEXT

52.202-1 DEFINITIONS (DEC 2001) --ALTERNATE I (MAY 2001)

(a) Agency head or head of the agency means the Secretary (Attorney General, Administrator, Governor, Chairperson, or other chief official, as appropriate) of the agency, unless otherwise indicated, including any deputy or assistant chief official of the executive agency.

(b) "Commercial component" means any component that is a commercial item.

(c) Any item, other than real property, that is of a type customarily used by the general public or by non-governmental entities for purposes other than governmental purposes, and that--

(i) Has been sold, leased, or licensed to the general public; or

(ii) Has been offered for sale, lease, or license to the general public;

(2) Any item that evolved from an item described in paragraph (c)(1) of this clause through advances in technology or performance and that is not yet available in the commercial marketplace, but will be available in the commercial marketplace in time to satisfy the delivery requirements under a Government solicitation;

(3) Any item that would satisfy a criterion expressed in paragraphs (c)(1) or (c)(2) of this clause, but for--

(i) Modifications of a type customarily available in the commercial marketplace; or

(ii) Minor modifications of a type not customarily available in the commercial marketplace made to meet Federal Government requirements. "Minor" modifications means modifications that do not significantly alter the nongovernmental function or essential physical characteristics of an item or component, or change the purpose of a process. Factors to be considered in determining whether a modification is minor include the value and size of the modification and the comparative value and size of the final product. Dollar values and percentages may be used as guideposts, but are not conclusive evidence that a modification is minor;

(4) Any combination of items meeting the requirements of paragraphs (c)(1), (2), (3), or (5) of this clause that are of a type customarily combined and sold in combination to the general public;

(5) Installation services, maintenance services, repair services, training services, and other services if--

(i) Such services are procured for support of an item referred to in paragraph (c)(1), (2), (3), or (4) of this definition, regardless of whether such services are provided by the same source or at the same time as the item; and

(ii) The source of such services provides similar services contemporaneously to the general public under terms and conditions similar to those offered to the Federal Government;

(6) Services of a type offered and sold competitively in substantial quantities in the commercial marketplace based on established catalog or market prices for specific tasks performed under standard commercial terms and conditions. This does not include services that are sold based on hourly rates without an established catalog or market price for a specific service performed. For purposes of these services--

(i) Catalog price means a price included in a catalog, price list, schedule, or other form that is regularly maintained by the manufacturer or vendor, is either published or otherwise available for inspection by customers, and states prices at which sales are currently, or were last, made to a significant number of buyers constituting the general public; and

(ii) Market prices means current prices that are established in the course of ordinary trade between buyers and sellers free to bargain and that can be substantiated through competition or from sources independent of the offerors.

(7) Any item, combination of items, or service referred to in subparagraphs (c)(1) through (c)(6), notwithstanding the fact that the item, combination of items, or service is transferred between or among separate divisions, subsidiaries, or affiliates of a Contractor; or

(8) A nondevelopmental item, if the procuring agency determines the item was developed exclusively at private expense and sold in substantial quantities, on a competitive basis, to multiple State and local Governments.

(d) Component means any item supplied to the Government as part of an end item or of another component, except that for use in 52.225-9, and 52.225-11 see the definitions in 52.225-9(a) and 52.225-11(a).

(e) Contracting Officer means a person with the authority to enter into, administer, and/or terminate contracts and make related determinations and findings. The term includes certain authorized representatives of the Contracting Officer acting within the limits of their authority as delegated by the Contracting Officer.

(f) Nondevelopmental item means--

(1) Any previously developed item of supply used exclusively for governmental purposes by a Federal agency, a State or local government, or a foreign government with which the United States has a mutual defense cooperation agreement;

(2) Any item described in paragraph (f)(1) of this definition that requires only minor modification or modifications of a type customarily available in the commercial marketplace in order to meet the requirements of the procuring department or agency; or

(3) Any item of supply being produced that does not meet the requirements of paragraph (f)(1) or (f)(2) solely because the item is not yet in use.

(End of clause)

52.203-3 GRATUITIES (APR 1984)

(a) The right of the Contractor to proceed may be terminated by written notice if, after notice and hearing, the agency head or a designee determines that the Contractor, its agent, or another representative--

(1) Offered or gave a gratuity (e.g., an entertainment or gift) to an officer, official, or employee of the Government; and

(2) Intended, by the gratuity, to obtain a contract or favorable treatment under a contract.

(b) The facts supporting this determination may be reviewed by any court having lawful jurisdiction.

(c) If this contract is terminated under paragraph (a) of this clause, the Government is entitled--

(1) To pursue the same remedies as in a breach of the contract; and

(2) In addition to any other damages provided by law, to exemplary damages of not less than 3 nor more than 10 times the cost incurred by the Contractor in giving gratuities to the person concerned, as determined by the agency head or a designee. (This subparagraph (c)(2) is applicable only if this contract uses money appropriated to the Department of Defense.)

(d) The rights and remedies of the Government provided in this clause shall not be exclusive and are in addition to any other rights and remedies provided by law or under this contract.

(End of clause)

52.203-5 COVENANT AGAINST CONTINGENT FEES (APR 1984)

(a) The Contractor warrants that no person or agency has been employed or retained to solicit or obtain this contract upon an agreement or understanding for a contingent fee, except a bona fide employee or agency. For breach or violation of this warranty, the Government shall have the right to annul this contract without liability or, in its discretion, to deduct from the contract price or consideration, or otherwise recover, the full amount of the contingent fee.

(b) "Bona fide agency," as used in this clause, means an established commercial or selling agency, maintained by a contractor for the purpose of securing business, that neither exerts nor proposes to exert improper influence to solicit or obtain Government contracts nor holds itself out as being able to obtain any Government contract or contracts through improper influence.

"Bona fide employee," as used in this clause, means a person, employed by a contractor and subject to the contractor's supervision and control as to time, place, and manner of performance, who neither exerts nor proposes to exert improper influence to solicit or obtain Government contracts nor holds out as being able to obtain any Government contract or contracts through improper influence.

"Contingent fee," as used in this clause, means any commission, percentage, brokerage, or other fee that is contingent upon the success that a person or concern has in securing a Government contract.

"Improper influence," as used in this clause, means any influence that induces or tends to induce a Government employee or officer to give consideration or to act regarding a Government contract on any basis other than the merits of the matter.

(End of clause)

52.203-7 ANTI-KICKBACK PROCEDURES. (JUL 1995)

(a) Definitions.

"Kickback," as used in this clause, means any money, fee, commission, credit, gift, gratuity, thing of value, or compensation of any kind which is provided, directly or indirectly, to any prime Contractor, prime Contractor employee, subcontractor, or subcontractor employee for the purpose of improperly obtaining or rewarding favorable treatment in connection with a prime contract or in connection with a subcontract relating to a prime contract.

"Person," as used in this clause, means a corporation, partnership, business association of any kind, trust, joint-stock company, or individual.

"Prime contract," as used in this clause, means a contract or contractual action entered into by the United States for the purpose of obtaining supplies, materials, equipment, or services of any kind.

"Prime Contractor," as used in this clause, means a person who has entered into a prime contract with the United States.

"Prime Contractor employee," as used in this clause, means any officer, partner, employee, or agent of a prime Contractor.

"Subcontract," as used in this clause, means a contract or contractual action entered into by a prime Contractor or subcontractor for the purpose of obtaining supplies, materials, equipment, or services of any kind under a prime contract.

"Subcontractor," as used in this clause, (1) means any person, other than the prime Contractor, who offers to furnish or furnishes any supplies, materials, equipment, or services of any kind under a prime contract or a subcontract entered into in connection with such prime contract, and (2) includes any person who offers to furnish or furnishes general supplies to the prime Contractor or a higher tier subcontractor.

"Subcontractor employee," as used in this clause, means any officer, partner, employee, or agent of a subcontractor.

(b) The Anti-Kickback Act of 1986 (41 U.S.C. 51-58) (the Act), prohibits any person from -

(1) Providing or attempting to provide or offering to provide any kickback;

(2) Soliciting, accepting, or attempting to accept any kickback; or

(3) Including, directly or indirectly, the amount of any kickback in the contract price charged by a prime Contractor to the United States or in the contract price charged by a subcontractor to a prime Contractor or higher tier subcontractor.

(c)(1) The Contractor shall have in place and follow reasonable procedures designed to prevent and detect possible violations described in paragraph (b) of this clause in its own operations and direct business relationships.

(2) When the Contractor has reasonable grounds to believe that a violation described in paragraph (b) of this clause may have occurred, the Contractor shall promptly report in writing the possible violation. Such reports shall be made to the inspector general of the contracting agency, the head of the contracting agency if the agency does not have an inspector general, or the Department of Justice.

(3) The Contractor shall cooperate fully with any Federal agency investigating a possible violation described in paragraph (b) of this clause.

(4) The Contracting Officer may (i) offset the amount of the kickback against any monies owed by the United States under the prime contract and/or (ii) direct that the Prime Contractor withhold, from sums owed a subcontractor under the prime contract, the amount of any kickback. The Contracting Officer may order the monies withheld under subdivision (c)(4)(ii) of this clause be paid over to the Government unless the Government has already offset those monies under subdivision (c)(4)(i) of this clause. In either case, the Prime Contractor shall notify the Contracting Officer when the monies are withheld.

(5) The Contractor agrees to incorporate the substance of this clause, including this subparagraph (c)(5) but

excepting subparagraph (c)(1), in all subcontracts under this contract which exceed $100,000.

52.203-8 CANCELLATION, RESCISSION, AND RECOVERY OF FUNDS FOR ILLEGAL OR IMPROPER ACTIVITY (JAN 1997)

(a) If the Government receives information that a contractor or a person has engaged in conduct constituting a violation of subsection (a), (b), (c), or (d) of Section 27 of the Office of Federal Procurement Policy Act (41 U.S.C. 423) (the Act), as amended by section 4304 of the 1996 National Defense Authorization Act for Fiscal Year 1996 (Pub. L. 104-106), the Government may--

(1) Cancel the solicitation, if the contract has not yet been awarded or issued; or

(2) Rescind the contract with respect to which--

(i) The Contractor or someone acting for the Contractor has been convicted for an offense where the conduct constitutes a violation of subsection 27(a) or (b) of the Act for the purpose of either--

(A) Exchanging the information covered by such subsections for anything of value; or

(B) Obtaining or giving anyone a competitive advantage in the award of a Federal agency procurement contract; or

(ii) The head of the contracting activity has determined, based upon a preponderance of the evidence, that the Contractor or someone acting for the Contractor has engaged in conduct constituting an offense punishable under subsections 27(e)(1) of the Act.

(b) If the Government rescinds the contract under paragraph (a) of this clause, the Government is entitled to recover, in addition to any penalty prescribed by law, the amount expended under the contract.

(c) The rights and remedies of the Government specified herein are not exclusive, and are in addition to any other rights and remedies provided by law, regulation, or under this contract.

(End of clause)

52.203-10 PRICE OR FEE ADJUSTMENT FOR ILLEGAL OR IMPROPER ACTIVITY (JAN 1997)

(a) The Government, at its election, may reduce the price of a fixed-price type contract and the total cost and fee under a cost-type contract by the amount of profit or fee determined as set forth in paragraph (b) of this clause if the head of the contracting activity or designee determines that there was a violation of subsection 27 (a), (b), or (c) of the Office of Federal Procurement Policy Act, as amended (41 U.S.C. 423), as implemented in section 3.104 of the Federal Acquisition Regulation.

(b) The price or fee reduction referred to in paragraph (a) of this clause shall be--

(1) For cost-plus-fixed-fee contracts, the amount of the fee specified in the contract at the time of award;

(2) For cost-plus-incentive-fee contracts, the target fee specified in the contract at the time of award, notwithstanding any minimum fee or "fee floor" specified in the contract;

(3) For cost-plus-award-fee contracts--

(i) The base fee established in the contract at the time of contract award;

(ii) If no base fee is specified in the contract, 30 percent of the amount of each award fee otherwise payable to the Contractor for each award fee evaluation period or at each award fee determination point.

(4) For fixed-price-incentive contracts, the Government may--

(i) Reduce the contract target price and contract target profit both by an amount equal to the initial target profit specified in the contract at the time of contract award; or

(ii) If an immediate adjustment to the contract target price and contract target profit would have a significant adverse impact on the incentive price revision relationship under the contract, or adversely affect the contract financing provisions, the Contracting Officer may defer such adjustment until establishment of the total final price of the contract. The total final price established in accordance with the incentive price revision provisions of the contract shall be reduced by an amount equal to the initial target profit specified in the contract at the time of contract award and such reduced price shall be the total final contract price.

(5) For firm-fixed-price contracts, by 10 percent of the initial contract price or a profit amount determined by the Contracting Officer from records or documents in existence prior to the date of the contract award.

(c) The Government may, at its election, reduce a prime contractor's price or fee in accordance with the procedures of paragraph (b) of this clause for violations of the Act by its subcontractors by an amount not to exceed the amount of profit or fee reflected in the subcontract at the time the subcontract was first definitively priced.

(d) In addition to the remedies in paragraphs (a) and (c) of this clause, the Government may terminate this contract for default. The rights and remedies of the Government specified herein are not exclusive, and are in addition to any other rights and remedies provided by law or under this contract.

(End of clause)

52.203-12 LIMITATION ON PAYMENTS TO INFLUENCE CERTAIN FEDERAL TRANSACTIONS (JUN 1997)

(a) Definitions.

"Agency," as used in this clause, means executive agency as defined in 2.101.

"Covered Federal action," as used in this clause, means any of the following Federal actions:

(1) The awarding of any Federal contract.

(2) The making of any Federal grant.

(3) The making of any Federal loan.

(4) The entering into of any cooperative agreement.

(5) The extension, continuation, renewal, amendment, or modification of any Federal contract, grant, loan, or cooperative agreement.

"Indian tribe" and "tribal organization," as used in this clause, have the meaning provided in section 4 of the Indian Self-Determination and Education Assistance Act (25 U.S.C. 450B) and include Alaskan Natives.

"Influencing or attempting to influence," as used in this clause, means making, with the intent to influence, any communication to or appearance before an officer or employee of any agency, a Member of Congress, an officer or employee of Congress, or an employee of a Member of Congress in connection with any covered Federal action.

"Local government," as used in this clause, means a unit of government in a State and, if chartered, established, or otherwise recognized by a State for the performance of a governmental duty, including a local public authority, a special district, an intrastate district, a council of governments, a sponsor group representative organization, and any other instrumentality of a local government.

"Officer or employee of an agency," as used in this clause, includes the following individuals who are employed by an agency:

(1) An individual who is appointed to a position in the Government under Title 5, United States Code, including a position under a temporary appointment.

(2) A member of the uniformed services, as defined in subsection 101(3), Title 37, United States Code.

(3) A special Government employee, as defined in section 202, Title 18, United States Code.

(4) An individual who is a member of a Federal advisory committee, as defined by the Federal Advisory Committee Act, Title 5, United States Code, appendix 2.

"Person," as used in this clause, means an individual, corporation, company, association, authority, firm, partnership, society, State, and local government, regardless of whether such entity is operated for profit, or not for profit. This term excludes an Indian tribe, tribal organization, or any other Indian organization with respect to expenditures specifically permitted by other Federal law.

"Reasonable compensation," as used in this clause, means, with respect to a regularly employed officer or employee of any person, compensation that is consistent with the normal compensation for such officer or employee for work that is not furnished to, not funded by, or not furnished in cooperation with the Federal Government.

"Reasonable payment," as used in this clause, means, with respect to professional and other technical services, a payment in an amount that is consistent with the amount normally paid for such services in the private sector.

"Recipient," as used in this clause, includes the Contractor and all subcontractors. This term excludes an Indian tribe, tribal organization, or any other Indian organization with respect to expenditures specifically permitted by other Federal law.

"Regularly employed," as used in this clause, means, with respect to an officer or employee of a person requesting or receiving a Federal contract, an officer or employee who is employed by such person for at least 130 working days within 1 year immediately preceding the date of the submission that initiates agency consideration of such person for receipt of such contract. An officer or employee who is employed by such person for less than 130 working days within 1 year immediately preceding the date of the submission that initiates agency consideration of such person shall be considered to be regularly employed as soon as he or she is employed by such person for 130 working days.

"State," as used in this clause, means a State of the United States, the District of Columbia, the Commonwealth of Puerto Rico, a territory or possession of the United States, an agency or instrumentality of a State, and multi-State, regional, or interstate entity having governmental duties and powers.

(b) Prohibitions.

(1) Section 1352 of Title 31, United States Code, among other things, prohibits a recipient of a Federal contract, grant, loan, or cooperative agreement from using appropriated funds to pay any person for influencing or attempting to influence an officer or employee of any agency, a Member of Congress, an officer or employee of Congress, or an employee of a Member of Congress in connection with any of the following covered Federal actions: the awarding of any Federal contract; the making of any Federal grant; the making of any Federal loan; the entering into of any cooperative agreement; or the modification of any Federal contract, grant, loan, or cooperative agreement.

(2) The Act also requires Contractors to furnish a disclosure if any funds other than Federal appropriated funds (including profit or fee received under a covered Federal transaction) have been paid, or will be paid, to any person for influencing or attempting to influence an officer or employee of any agency, a Member of Congress, an officer or employee of Congress, or an employee of a Member of Congress in connection with a Federal contract, grant, loan, or cooperative agreement.

(3) The prohibitions of the Act do not apply under the following conditions:

(i) Agency and legislative liaison by own employees.

(A) The prohibition on the use of appropriated funds, in subparagraph (b)(1) of this clause, does not apply in the case of a payment of reasonable compensation made to an officer or employee of a person requesting or receiving a covered Federal action if the payment is for agency and legislative liaison activities not directly related to a covered Federal action.

(B) For purposes of subdivision (b)(3)(i)(A) of this clause, providing any information specifically requested by an agency or Congress is permitted at any time.

(C) The following agency and legislative liaison activities are permitted at any time where they are not related to a specific solicitation for any covered Federal action:

(1) Discussing with an agency the qualities and characteristics (including individual demonstrations) of the person's products or services, conditions or terms of sale, and service capabilities.

(2) Technical discussions and other activities regarding the application or adaptation of the person's products or services for an agency's use.

(D) The following agency and legislative liaison activities are permitted where they are prior to formal solicitation of any covered Federal action--

(1) Providing any information not specifically requested but necessary for an agency to make an informed decision about initiation of a covered Federal action;

(2) Technical discussions regarding the preparation of an unsolicited proposal prior to its official submission; and

(3) Capability presentations by persons seeking awards from an agency pursuant to the provisions of the Small Business Act, as amended by Pub. L. 95-507, and subsequent amendments.

(E) Only those services expressly authorized by subdivision (b)(3)(i)(A) of this clause are permitted under this clause.

(ii) Professional and technical services.

(A) The prohibition on the use of appropriated funds, in subparagraph (b)(1) of this clause, does not apply in the case of--

(1) A payment of reasonable compensation made to an officer or employee of a person requesting or receiving a covered Federal action or an extension, continuation, renewal, amendment, or modification of a covered Federal action, if payment is for professional or technical services rendered directly in the preparation, submission, or negotiation of any bid, proposal, or application for that Federal action or for meeting requirements imposed by or pursuant to law as a condition for receiving that Federal action.

(2) Any reasonable payment to a person, other than an officer or employee of a person requesting or receiving a covered Federal action or an extension, continuation, renewal, amendment, or modification of a covered Federal action if the payment is for professional or technical services rendered directly in the preparation, submission, or negotiation of any bid, proposal, or application for that Federal action or for meeting requirements imposed by or pursuant to law as a condition for receiving that Federal action. Persons other than officers or employees of a person requesting or receiving a covered Federal action include consultants and trade associations.

(B) For purposes of subdivision (b)(3)(ii)(A) of this clause, "professional and technical services" shall be limited to advice and analysis directly applying any professional or technical discipline. For example, drafting of a legal document accompanying a bid or proposal by a lawyer is allowable. Similarly, technical advice provided by an engineer on the performance or operational capability of a piece of equipment rendered directly in the negotiation of a contract is allowable. However, communications with the intent to influence made by a professional (such as a licensed lawyer) or a technical person (such as a licensed accountant) are not allowable under this section unless they provide advice and analysis directly applying their professional or technical expertise and unless the advice or analysis is rendered directly and solely in the preparation, submission or negotiation of a covered Federal action. Thus, for example, communications with the intent to influence made by a lawyer that do not provide legal advice or analysis directly and solely related to the legal aspects of his or her client's proposal, but generally advocate one proposal over another are not allowable under this section because the lawyer is not providing professional legal services. Similarly, communications with the intent to influence made by an engineer providing an engineering analysis prior to the preparation or submission of a bid or proposal are not allowable under this section since the engineer is providing technical services but not directly in the preparation, submission or negotiation of a covered Federal action.

(C) Requirements imposed by or pursuant to law as a condition for receiving a covered Federal award include those required by law or regulation and any other requirements in the actual award documents.

(D) Only those services expressly authorized by subdivisions (b)(3)(ii)(A)(1) and (2) of this clause are permitted under this clause.

(E) The reporting requirements of FAR 3.803(a) shall not apply with respect to payments of reasonable compensation made to regularly employed officers or employees of a person.

(c) Disclosure.

(1) The Contractor who requests or receives from an agency a Federal contract shall file with that agency a disclosure form, OMB standard form LLL, Disclosure of Lobbying Activities, if such person has made or has agreed to make any payment using nonappropriated funds (to include profits from any covered Federal action), which would be prohibited under subparagraph (b)(1) of this clause, if paid for with appropriated funds.

(2) The Contractor shall file a disclosure form at the end of each calendar quarter in which there occurs any event that materially affects the accuracy of the information contained in any disclosure form previously filed by such person under subparagraph (c)(1) of this clause. An event that materially affects the accuracy of the information reported includes--

(i) A cumulative increase of $25,000 or more in the amount paid or expected to be paid for influencing or attempting to influence a covered Federal action; or

(ii) A change in the person(s) or individual(s) influencing or attempting to influence a covered Federal action; or

(iii) A change in the officer(s), employee(s), or Member(s) contacted to influence or attempt to influence a covered Federal action.

(3) The Contractor shall require the submittal of a certification, and if required, a disclosure form by any person who requests or receives any subcontract exceeding $100,000 under the Federal contract.

(4) All subcontractor disclosure forms (but not certifications) shall be forwarded from tier to tier until received by the prime Contractor. The prime Contractor shall submit all disclosures to the Contracting Officer at the end of the calendar quarter in which the disclosure form is submitted by the subcontractor. Each subcontractor certification shall be retained in the subcontract file of the awarding Contractor.

(d) Agreement. The Contractor agrees not to make any payment prohibited by this clause.

(e) Penalties.

(1) Any person who makes an expenditure prohibited under paragraph (a) of this clause or who fails to file or amend the disclosure form to be filed or amended by paragraph (b) of this clause shall be subject to civil penalties as provided for by 31 U.S.C. 1352. An imposition of a civil penalty does not prevent the Government from seeking any other remedy that may be applicable.

(2) Contractors may rely without liability on the representation made by their subcontractors in the certification and disclosure form.

(f) Cost allowability. Nothing in this clause makes allowable or reasonable any costs which would otherwise be unallowable or unreasonable. Conversely, costs made specifically unallowable by the requirements in this clause will not be made allowable under any other provision.

(End of clause)

52.204-4 PRINTED OR COPIED DOUBLE-SIDED ON RECYCLED PAPER (AUG 2000)

(a) Definitions. As used in this clause--

“Postconsumer material” means a material or finished product that has served its intended use and has been discarded for disposal or recovery, having completed its life as a consumer item. Postconsumer material is a part of the broader category of “recovered material.” For paper and paper products, postconsumer material means “postconsumer fiber” defined by the U.S. Environmental Protection Agency (EPA) as--

(1) Paper, paperboard, and fibrous materials from retail stores, office buildings, homes, and so forth, after they have passed through their end-usage as a consumer item, including: used corrugated boxes; old newspapers; old magazines; mixed waste paper; tabulating cards; and used cordage; or

(2) All paper, paperboard, and fibrous materials that enter and are collected from municipal solid waste; but not

(3) Fiber derived from printers' over-runs, converters' scrap, and over-issue publications.

“Printed or copied double-sided” means printing or reproducing a document so that information is on both sides of a sheet of paper.

“Recovered material,” for paper and paper products, is defined by EPA in its Comprehensive Procurement Guideline as “recovered fiber” and means the following materials:

(1) Postconsumer fiber; and

(2) Manufacturing wastes such as--

(i) Dry paper and paperboard waste generated after completion of the papermaking process (that is, those manufacturing operations up to and including the cutting and trimming of the paper machine reel into smaller rolls or rough sheets) including: envelope cuttings, bindery trimmings, and other paper and paperboard waste resulting from printing, cutting, forming, and other converting operations; bag, box, and carton manufacturing wastes; and butt rolls, mill wrappers, and rejected unused stock; and

(ii) Repulped finished paper and paperboard from obsolete inventories of paper and paperboard manufacturers, merchants, wholesalers, dealers, printers, converters, or others.

(b) In accordance with Section 101 of Executive Order 13101 of September 14, 1998, Greening the Government through Waste Prevention, Recycling, and Federal Acquisition, the Contractor is encouraged to submit paper documents, such as offers, letters, or reports, that are printed or copied double-sided on recycled paper that meet minimum content standards specified in Section 505 of Executive Order 13101, when not using electronic commerce methods to submit information or data to the Government.

(c) If the Contractor cannot purchase high-speed copier paper, offset paper, forms bond, computer printout paper, carbonless paper, file folders, white wove envelopes, writing and office paper, book paper, cotton fiber paper, and cover stock meeting the 30 percent postconsumer material standard for use in submitting paper documents to the Government, it should use paper containing no less than 20 percent postconsumer material. This lesser standard should be used only when paper meeting the 30 percent postconsumer material standard is not obtainable at a reasonable price or does not meet reasonable performance standards.

(End of clause)

52.209-6 PROTECTING THE GOVERNMENT'S INTEREST WHEN SUBCONTRACTING WITH CONTRACTORS DEBARRED, SUSPENDED, OR PROPOSED FOR DEBARMENT (JUL 1995)

(a) The Government suspends or debars Contractors to protect the Government's interests. The Contractor shall not enter into any subcontract in excess of the $25,000 with a Contractor that is debarred, suspended, or proposed for debarment unless there is a compelling reason to do so.

(b) The Contractor shall require each proposed first-tier subcontractor, whose subcontract will exceed $25,000, to disclose to the Contractor, in writing, whether as of the time of award of the subcontract, the subcontractor, or its principles, is or is not debarred, suspended, or proposed for debarment by the Federal Government.

(c) A corporate officer or a designee of the Contractor shall notify the Contracting Officer, in writing, before entering into a subcontract with a party that is debarred, suspended, or proposed for debarment (see FAR 9.404 for

information on the List of Parties Excluded from Federal Procurement and Nonprocurement Programs). The notice must include the following:

(1) The name of the subcontractor.

(2) The Contractor's knowledge of the reasons for the subcontractor being on the List of Parties Excluded from Federal Procurement and Nonprocurement Programs.

(3) The compelling reason(s) for doing business with the subcontractor notwithstanding its inclusion on the List of Parties Excluded from Federal Procurement and Nonprocurement Programs.

(4) The systems and procedures the Contractor has established to ensure that it is fully protecting the Government's interests when dealing with such subcontractor in view of the specific basis for the party's debarment, suspension, or proposed debarment.

(End of clause)

52.211-18 VARIATION IN ESTIMATED QUANTITY (APR 1984)

If the quantity of a unit-priced item in this contract is an estimated quantity and the actual quantity of the unit-priced item varies more than 15 percent above or below the estimated quantity, an equitable adjustment in the contract price shall be made upon demand of either party. The equitable adjustment shall be based upon any increase or decrease in costs due solely to the variation above 115 percent or below 85 percent of the estimated quantity. If the quantity variation is such as to cause an increase in the time necessary for completion, the Contractor may request, in writing, an extension of time, to be received by the Contracting Officer within 10 days from the beginning of the delay, or within such further period as may be granted by the Contracting Officer before the date of final settlement of the contract. Upon the receipt of a written request for an extension, the Contracting Officer shall ascertain the facts and make an adjustment for extending the completion date as, in the judgement of the Contracting Officer, is justified.

52.215-2 AUDIT AND RECORDS--NEGOTIATION (JUN 1999)

(a) As used in this clause, "records" includes books, documents, accounting procedures and practices, and other data, regardless of type and regardless of whether such items are in written form, in the form of computer data, or in any other form.

(b) Examination of costs. If this is a cost-reimbursement, incentive, time-and-materials, labor-hour, or price redeterminable contract, or any combination of these, the Contractor shall maintain and the Contracting Officer, or an authorized representative of the Contracting Officer, shall have the right to examine and audit all records and other evidence sufficient to reflect properly all costs claimed to have been incurred or anticipated to be incurred directly or indirectly in performance of this contract. This right of examination shall include inspection at all reasonable times of the Contractor's plants, or parts of them, engaged in performing the contract.

(c) Cost or pricing data. If the Contractor has been required to submit cost or pricing data in connection with any pricing action relating to this contract, the Contracting Officer, or an authorized representative of the Contracting Officer, in order to evaluate the accuracy, completeness, and currency of the cost or pricing data, shall have the right to examine and audit all of the Contractor's records, including computations and projections, related to--

(1) The proposal for the contract, subcontract, or modification;

(2) The discussions conducted on the proposal(s), including those related to negotiating;

(3) Pricing of the contract, subcontract, or modification; or

(4) Performance of the contract, subcontract or modification.

(d) Comptroller General--(1) The Comptroller General of the United States, or an authorized representative, shall have access to and the right to examine any of the Contractor's directly pertinent records involving transactions related to this contract or a subcontract hereunder.

(2) This paragraph may not be construed to require the Contractor or subcontractor to create or maintain any record that the Contractor or subcontractor does not maintain in the ordinary course of business or pursuant to a provision of law.

(e) Reports. If the Contractor is required to furnish cost, funding, or performance reports, the Contracting Officer or an authorized representative of the Contracting Officer shall have the right to examine and audit the supporting records and materials, for the purpose of evaluating (1) the effectiveness of the Contractor's policies and procedures to produce data compatible with the objectives of these reports and (2) the data reported.

(f) Availability. The Contractor shall make available at its office at all reasonable times the records, materials, and other evidence described in paragraphs (a), (b), (c), (d), and (e) of this clause, for examination, audit, or reproduction, until 3 years after final payment under this contract or for any shorter period specified in Subpart 4.7, Contractor Records Retention, of the Federal Acquisition Regulation (FAR), or for any longer period required by statute or by other clauses of this contract. In addition--

(1) If this contract is completely or partially terminated, the Contractor shall make available the records relating to the work terminated until 3 years after any resulting final termination settlement; and

(2) The Contractor shall make available records relating to appeals under the Disputes clause or to litigation or the settlement of claims arising under or relating to this contract until such appeals, litigation, or claims are finally resolved.

(g) The Contractor shall insert a clause containing all the terms of this clause, including this paragraph (g), in all subcontracts under this contract that exceed the simplified acquisition threshold, and--

(1) That are cost-reimbursement, incentive, time-and-materials, labor-hour, or price-redeterminable type or any combination of these;

(2) For which cost or pricing data are required; or

(3) That require the subcontractor to furnish reports as discussed in paragraph (e) of this clause.

The clause may be altered only as necessary to identify properly the contracting parties and the Contracting Officer under the Government prime contract.

(End of clause)

52.215-10 PRICE REDUCTION FOR DEFECTIVE COST OR PRICING DATA (OCT 1997)

(a) If any price, including profit or fee, negotiated in connection with this contract, or any cost reimbursable under this contract, was increased by any significant amount because--

(1) The Contractor or a subcontractor furnished cost or pricing data that were not complete, accurate, and current as certified in its Certificate of Current Cost or Pricing Data;

(2) A subcontractor or prospective subcontractor furnished the Contractor cost or pricing data that were not complete, accurate, and current as certified in the Contractor's Certificate of Current Cost or Pricing Data; or

(3) Any of these parties furnished data of any description that were not accurate, the price or cost shall be reduced accordingly and the contract shall be modified to reflect the reduction.

(b) Any reduction in the contract price under paragraph (a) of this clause due to defective data from a prospective subcontractor that was not subsequently awarded the subcontract shall be limited to the amount, plus applicable overhead and profit markup, by which--

(1) The actual subcontract; or

(2) The actual cost to the Contractor, if there was no subcontract, was less than the prospective subcontract cost estimate submitted by the Contractor; provided, that the actual subcontract price was not itself affected by defective cost or pricing data.

(c)(1) If the Contracting Officer determines under paragraph (a) of this clause that a price or cost reduction should be made, the Contractor agrees not to raise the following matters as a defense:

(i) The Contractor or subcontractor was a sole source supplier or otherwise was in a superior bargaining position and thus the price of the contract would not have been modified even if accurate, complete, and current cost or pricing data had been submitted.

(ii) The Contracting Officer should have known that the cost or pricing data in issue were defective even though the Contractor or subcontractor took no affirmative action to bring the character of the data to the attention of the Contracting Officer.

(iii) The contract was based on an agreement about the total cost of the contract and there was no agreement about the cost of each item procured under the contract.

(iv) The Contractor or subcontractor did not submit a Certificate of Current Cost or Pricing Data.

(2)(i) Except as prohibited by subdivision (c)(2)(ii) of this clause, an offset in an amount determined appropriate by the Contracting Officer based upon the facts shall be allowed against the amount of a contract price reduction if--

(A) The Contractor certifies to the Contracting Officer that, to the best of the Contractor's knowledge and belief, the Contractor is entitled to the offset in the amount requested; and

(B) The Contractor proves that the cost or pricing data were available before the “as of” date specified on its Certificate of Current Cost or Pricing Data, and that the data were not submitted before such date.

(ii) An offset shall not be allowed if--

(A) The understated data were known by the Contractor to be understated before the “as of” date specified on its Certificate of Current Cost or Pricing Data; or

(B) The Government proves that the facts demonstrate that the contract price would not have increased in the amount to be offset even if the available data had been submitted before the “as of” date specified on its Certificate of Current Cost or Pricing Data.

(d) If any reduction in the contract price under this clause reduces the price of items for which payment was made prior to the date of the modification reflecting the price reduction, the Contractor shall be liable to and shall pay the United States at the time such overpayment is repaid--

(1) Simple interest on the amount of such overpayment to be computed from the date(s) of overpayment to the Contractor to the date the Government is repaid by the Contractor at the applicable underpayment rate effective for each quarter prescribed by the Secretary of the Treasury under 26 U.S.C. 6621(a)(2); and

A penalty equal to the amount of the overpayment, if the Contractor or subcontractor knowingly submitted cost or pricing data that were incomplete, inaccurate, or noncurrent.

(End of clause)

52.215-11 PRICE REDUCTION FOR DEFECTIVE COST OR PRICING DATA--MODIFICATIONS (OCT 1997)

(a) This clause shall become operative only for any modification to this contract involving a pricing adjustment expected to exceed the threshold for submission of cost or pricing data at FAR 15.403-4, except that this clause does not apply to any modification if an exception under FAR 15.403-1 applies.

(b) If any price, including profit or fee, negotiated in connection with any modification under this clause, or any cost reimbursable under this contract, was increased by any significant amount because (1) the Contractor or a subcontractor furnished cost or pricing data that were not complete, accurate, and current as certified in its Certificate of Current Cost or Pricing Data, (2) a subcontractor or prospective subcontractor furnished the Contractor cost or pricing data that were not complete, accurate, and current as certified in the Contractor's Certificate of Current Cost or Pricing Data, or (3) any of these parties furnished data of any description that were not accurate, the price or cost shall be reduced accordingly and the contract shall be modified to reflect the reduction. This right to a price reduction is limited to that resulting from defects in data relating to modifications for which this clause becomes operative under paragraph (a) of this clause.

(c) Any reduction in the contract price under paragraph (b) of this clause due to defective data from a prospective subcontractor that was not subsequently awarded the subcontract shall be limited to the amount, plus applicable overhead and profit markup, by which--

(1) The actual subcontract; or

(2) The actual cost to the Contractor, if there was no subcontract, was less than the prospective subcontract cost estimate submitted by the Contractor; provided, that the actual subcontract price was not itself affected by defective cost or pricing data.

(d)(1) If the Contracting Officer determines under paragraph (b) of this clause that a price or cost reduction should be made, the Contractor agrees not to raise the following matters as a defense:

(i) The Contractor or subcontractor was a sole source supplier or otherwise was in a superior bargaining position and thus the price of the contract would not have been modified even if accurate, complete, and current cost or pricing data had been submitted.

(ii) The Contracting Officer should have known that the cost or pricing data in issue were defective even though the Contractor or subcontractor took no affirmative action to bring the character of the data to the attention of the Contracting Officer.

(iii) The contract was based on an agreement about the total cost of the contract and there was no agreement about the cost of each item procured under the contract.

(iv) The Contractor or subcontractor did not submit a Certificate of Current Cost or Pricing Data.

(2)(i) Except as prohibited by subdivision (d)(2)(ii) of this clause, an offset in an amount determined appropriate by the Contracting Officer based upon the facts shall be allowed against the amount of a contract price reduction if--

(A) The Contractor certifies to the Contracting Officer that, to the best of the Contractor's knowledge and belief, the Contractor is entitled to the offset in the amount requested; and

(B) The Contractor proves that the cost or pricing data were available before the “as of” date specified on its Certificate of Current Cost or Pricing Data, and that the data were not submitted before such date.

(ii) An offset shall not be allowed if--

(A) The understated data were known by the Contractor to be understated before the “as of” date specified on its Certificate of Current Cost or Pricing Data; or

(B) The Government proves that the facts demonstrate that the contract price would not have increased in the amount to be offset even if the available data had been submitted before the “as of” date specified on its Certificate of Current Cost or Pricing Data.

(e) If any reduction in the contract price under this clause reduces the price of items for which payment was made prior to the date of the modification reflecting the price reduction, the Contractor shall be liable to and shall pay the United States at the time such overpayment is repaid--

(1) Simple interest on the amount of such overpayment to be computed from the date(s) of overpayment to the Contractor to the date the Government is repaid by the Contractor at the applicable underpayment rate effective for each quarter prescribed by the Secretary of the Treasury under 26 U.S.C. 6621(a)(2); and

A penalty equal to the amount of the overpayment, if the Contractor or subcontractor knowingly submitted cost or pricing data that were incomplete, inaccurate, or noncurrent.

(End of clause)

52.215-13 SUBCONTRACTOR COST OR PRICING DATA--MODIFICATIONS (OCT 1997)

(a) The requirements of paragraphs (b) and (c) of this clause shall--

(1) Become operative only for any modification to this contract involving a pricing adjustment expected to exceed the threshold for submission of cost or pricing data at FAR 15.403-4; and

(2) Be limited to such modifications.

(b) Before awarding any subcontract expected to exceed the threshold for submission of cost or pricing data at FAR 15.403-4, on the date of agreement on price or the date of award, whichever is later; or before pricing any

subcontract modification involving a pricing adjustment expected to exceed the threshold for submission of cost or pricing data at FAR 15.403-4, the Contractor shall require the subcontractor to submit cost or pricing data (actually or by specific identification in writing), unless an exception under FAR 15.403-1 applies.

(c) The Contractor shall require the subcontractor to certify in substantially the form prescribed in FAR 15.406-2 that, to the best of its knowledge and belief, the data submitted under paragraph (b) of this clause were accurate, complete, and current as of the date of agreement on the negotiated price of the subcontract or subcontract modification.

The Contractor shall insert the substance of this clause, including this paragraph (d), in each subcontract that exceeds the threshold for submission of cost or pricing data at FAR 15.403-4 on the date of agreement on price or the date of award, whichever is later.

(End of clause)

52.215-19 NOTIFICATION OF OWNERSHIP CHANGES (OCT 1997)

(a) The Contractor shall make the following notifications in writing:

(1) When the Contractor becomes aware that a change in its ownership has occurred, or is certain to occur, that could result in changes in the valuation of its capitalized assets in the accounting records, the Contractor shall notify the Administrative Contracting Officer (ACO) within 30 days.

(2) The Contractor shall also notify the ACO within 30 days whenever changes to asset valuations or any other cost changes have occurred or are certain to occur as a result of a change in ownership.

(b) The Contractor shall--

(1) Maintain current, accurate, and complete inventory records of assets and their costs;

(2) Provide the ACO or designated representative ready access to the records upon request;

(3) Ensure that all individual and grouped assets, their capitalized values, accumulated depreciation or amortization, and remaining useful lives are identified accurately before and after each of the Contractor's ownership changes; and

(4) Retain and continue to maintain depreciation and amortization schedules based on the asset records maintained before each Contractor ownership change.

The Contractor shall include the substance of this clause in all subcontracts under this contract that meet the applicability requirement of FAR 15.408(k).

(End of clause)

52.215-21 REQUIREMENTS FOR COST OR PRICING DATA OR INFORMATION OTHER THAN COST OR PRICING DATA--MODIFICATIONS (OCT 1997)

(a) Exceptions from cost or pricing data. (1) In lieu of submitting cost or pricing data for modifications under this contract, for price adjustments expected to exceed the threshold set forth at FAR 15.403-4 on the date of the agreement on price or the date of the award, whichever is later, the Contractor may submit a written request for exception by submitting the information described in the following subparagraphs. The Contracting Officer may

require additional supporting information, but only to the extent necessary to determine whether an exception should be granted, and whether the price is fair and reasonable--

(i) Identification of the law or regulation establishing the price offered. If the price is controlled under law by periodic rulings, reviews, or similar actions of a governmental body, attach a copy of the controlling document, unless it was previously submitted to the contracting office.

(ii) Information on modifications of contracts or subcontracts for commercial items. (A) If--

(1) The original contract or subcontract was granted an exception from cost or pricing data requirements because the price agreed upon was based on adequate price competition or prices set by law or regulation, or was a contract or subcontract for the acquisition of a commercial item; and

(2) The modification (to the contract or subcontract) is not exempted based on one of these exceptions, then the Contractor may provide information to establish that the modification would not change the contract or subcontract from a contract or subcontract for the acquisition of a commercial item to a contract or subcontract for the acquisition of an item other than a commercial item.

(B) For a commercial item exception, the Contractor shall provide, at a minimum, information on prices at which the same item or similar items have previously been sold that is adequate for evaluating the reasonableness of the price of the modification. Such information may include--

(1) For catalog items, a copy of or identification of the catalog and its date, or the appropriate pages for the offered items, or a statement that the catalog is on file in the buying office to which the proposal is being submitted. Provide a copy or describe current discount policies and price lists (published or unpublished), e.g., wholesale, original equipment manufacturer, or reseller. Also explain the basis of each offered price and its relationship to the established catalog price, including how the proposed price relates to the price of recent sales in quantities similar to the proposed quantities.

(2) For market-priced items, the source and date or period of the market quotation or other basis for market price, the base amount, and applicable discounts. In addition, describe the nature of the market.

(3) For items included on an active Federal Supply Service Multiple Award Schedule contract, proof that an exception has been granted for the schedule item.

(2) The Contractor grants the Contracting Officer or an authorized representative the right to examine, at any time before award, books, records, documents, or other directly pertinent records to verify any request for an exception under this clause, and the reasonableness of price. For items priced using catalog or market prices, or law or regulation , access does not extend to cost or profit information or other data relevant solely to the Contractor's determination of the prices to be offered in the catalog or marketplace.

(b) Requirements for cost or pricing data. If the Contractor is not granted an exception from the requirement to submit cost or pricing data, the following applies:

(1) The Contractor shall submit cost or pricing data and supporting attachments in accordance with Table 15-2 of FAR 15.408.

As soon as practicable after agreement on price, but before award (except for unpriced actions), the Contractor shall submit a Certificate of Current Cost or Pricing Data, as prescribed by FAR 15.406-2.

(End of clause)

52.219-3 NOTICE OF TOTAL HUBZONE SET-ASIDE (JAN 1999)

(a) Definition. HUBZone small business concern, as used in this clause, means a small business concern that appears on the List of Qualified HUBZone Small Business Concerns maintained by the Small Business Administration.

(b) General. (1) Offers are solicited only from HUBZone small business concerns. Offers received from concerns that are not HUBZone small business concerns shall not be considered.

(2) Any award resulting from this solicitation will be made to a HUBZone small business concern.

(c) Agreement. A HUBZone small business concern agrees that in the performance of the contract, in the case of a contract for--

(1) Services (except construction), at least 50 percent of the cost of personnel for contract performance will be spent for employees of the concern or employees of other HUBZone small business concerns;

(2) Supplies (other than acquisition from a nonmanufacturer of the supplies), at least 50 percent of the cost of manufacturing, excluding the cost of materials, will be performed by the concern or other HUBZone small business concerns;

(3) General construction, at least 15 percent of the cost of the contract performance incurred for personnel will be spent on the concern's employees or the employees of other HUBZone small business concerns; or

(4) Construction by special trade contractors, at least 25 percent of the cost of the contract performance incurred for personnel will be spent on the concern's employees or the employees of other HUBZone small business concerns.

(d) A HUBZone joint venture agrees that, in the performance of the contract, the applicable percentage specified in paragraph (c) of this clause will be performed by the HUBZone small business participant or participants.

(e) A HUBZone small business concern nonmanufacturer agrees to furnish in performing this contract only end items manufactured or produced by HUBZone small business manufacturer concerns. This paragraph does not apply in connection with construction or service contracts.

(End of clause)

52.219-8 UTILIZATION OF SMALL BUSINESS CONCERNS (OCT 2000)

(a) It is the policy of the United States that small business concerns, veteran-owned small business concerns, service-disabled veteran-owned small business concerns, HUBZone small business concerns, small disadvantaged business concerns, and women-owned small business concerns shall have the maximum practicable opportunity to participate in performing contracts let by any Federal agency, including contracts and subcontracts for subsystems, assemblies, components, and related services for major systems. It is further the policy of the United States that its prime contractors establish procedures to ensure the timely payment of amounts due pursuant to the terms of their subcontracts with small business concerns, veteran-owned small business concerns, service-disabled veteran-owned small business concerns, HUBZone small business concerns, small disadvantaged business concerns, and women-owned small business concerns.

(b) The Contractor hereby agrees to carry out this policy in the awarding of subcontracts to the fullest extent consistent with efficient contract performance. The Contractor further agrees to cooperate in any studies or

surveys as may be conducted by the United States Small Business Administration or the awarding agency of the United States as may be necessary to determine the extent of the Contractor's compliance with this clause.

Definitions. As used in this contract--

HUBZone small business concern means a small business concern that appears on the List of Qualified HUBZone Small Business Concerns maintained by the Small Business Administration.

Service-disabled veteran-owned small business concern--

(1) Means a small business concern--

(i) Not less than 51 percent of which is owned by one or more service-disabled veterans or, in the case of any publicly owned business, not less than 51 percent of the stock of which is owned by one or more service-disabled veterans; and

(ii) The management and daily business operations of which are controlled by one or more service-disabled veterans or, in the case of a veteran with permanent and severe disability, the spouse or permanent caregiver of such veteran.

(2) Service-disabled veteran means a veteran, as defined in 38 U.S.C. 101(2), with a disability that is service-connected, as defined in 38 U.S.C. 101(16).

Small business concern means a small business as defined pursuant to Section 3 of the Small Business Act and relevant regulations promulgated pursuant thereto.

Small disadvantaged business concern means a small business concern that represents, as part of its offer that--

(1) It has received certification as a small disadvantaged business concern consistent with 13 CFR part 124, subpart B;

(2) No material change in disadvantaged ownership and control has occurred since its certification;

(3) Where the concern is owned by one or more individuals, the net worth of each individual upon whom the certification is based does not exceed $750,000 after taking into account the applicable exclusions set forth at 13 CFR 124.104(c)(2); and

(4) It is identified, on the date of its representation, as a certified small disadvantaged business in the database maintained by the Small Business Administration (PRO-Net).

Veteran-owned small business concern means a small business concern--

(1) Not less than 51 percent of which is owned by one or more veterans (as defined at 38 U.S.C. 101(2)) or, in the case of any publicly owned business, not less than 51 percent of the stock of which is owned by one or more veterans; and

(2) The management and daily business operations of which are controlled by one or more veterans.

Women-owned small business concern means a small business concern--

(1) That is at least 51 percent owned by one or more women, or, in the case of any publicly owned business, at least 51 percent of the stock of which is owned by one or more women; and

(2) Whose management and daily business operations are controlled by one or more women.

(d) Contractors acting in good faith may rely on written representations by their subcontractors regarding their status as a small business concern, a veteran-owned small business concern, a service-disabled veteran-owned small business concern, a HUBZone small business concern, a small disadvantaged business concern, or a women-owned small business concern.

(End of clause)

52.219-14 LIMITATIONS ON SUBCONTRACTING (DEC 1996)

(a) This clause does not apply to the unrestricted portion of a partial set-aside.

(b) By submission of an offer and execution of a contract, the Offeror/Contractor agrees that in performance of the contract in the case of a contract for--

(1) Services (except construction). At least 50 percent of the cost of contract performance incurred for personnel shall be expended for employees of the concern.

(2) Supplies (other than procurement from a nonmanufacturer of such supplies). The concern shall perform work for at least 50 percent of the cost of manufacturing the supplies, not including the cost of materials.

(3) General construction. The concern will perform at least 15 percent of the cost of the contract, not including the cost of materials, with its own employees.

(4) Construction by special trade contractors. The concern will perform at least 25 percent of the cost of the contract, not including the cost of materials, with its own employees.

52.222-3 CONVICT LABOR (AUG 1996)

The Contractor agrees not to employ in the performance of this contract any person undergoing a sentence of imprisonment which has been imposed by any court of a State, the District of Columbia, the Commonwealth of Puerto Rico, the Virgin Islands, Guam, American Samoa, the Commonwealth of the Northern Mariana Islands, or the Trust Territory of the Pacific Islands. This limitation, however, shall not prohibit the employment by the Contractor in the performance of this contract of persons on parole or probation to work at paid employment during the term of their sentence or persons who have been pardoned or who have served their terms. Nor shall it prohibit the employment by the Contractor in the performance of this contract of persons confined for violation of the laws of any of the States, the District of Columbia, the Commonwealth of Puerto Rico, the Virgin Islands, Guam, American Samoa, the Commonwealth of the Northern Mariana Islands, or the Trust Territory of the Pacific Islands who are authorized to work at paid employment in the community under the laws of such jurisdiction, if--

(a)(1) The worker is paid or is in an approved work training program on a voluntary basis;

(2) Representatives of local union central bodies or similar labor union organizations have been consulted;

(3) Such paid employment will not result in the displacement of employed workers, or be applied in skills, crafts, or trades in which there is a surplus of available gainful labor in the locality, or impair existing contracts for services; and

(4) The rates of pay and other conditions of employment will not be less than those paid or provided for work of a similar nature in the locality in which the work is being performed; and

(b) The Attorney General of the United States has certified that the work-release laws or regulations of the jurisdiction involved are in conformity with the requirements of Executive Order 11755, as amended by Executive Orders 12608 and 12943.

(End of clause)

52.222-4 CONTRACT WORK HOURS AND SAFETY STANDARDS ACT - OVERTIME COMPENSATION. (SEP 2000)

(a) Overtime requirements. No Contractor or subcontractor employing laborers or mechanics (see Federal Acquisition Regulation 22.300) shall require or permit them to work over 40 hours in any workweek unless they are paid at least 1 and 1/2 times the basic rate of pay for each hour worked over 40 hours.

(b) Violation; liability for unpaid wages; liquidated damages. The responsible Contractor and subcontractor are liable for unpaid wages if they violate the terms in paragraph (a) of this clause. In addition, the Contractor and subcontractor are liable for liquidated damages payable to the Government. The Contracting Officer will assess liquidated damages at the rate of $10 per affected employee for each calendar day on which the employer required or permitted the employee to work in excess of the standard workweek of 40 hours without paying overtime wages required by the Contract Work Hours and Safety Standards Act.

(c) Withholding for unpaid wages and liquidated damages. The Contracting Officer will withhold from payments due under the contract sufficient funds required to satisfy any Contractor or subcontractor liabilities for unpaid wages and liquidated damages. If amounts withheld under the contract are insufficient to satisfy Contractor or subcontractor liabilities, the Contracting Officer will withhold payments from other Federal or Federally assisted contracts held by the same Contractor that are subject to the Contract Work Hours and Safety Standards Act.

(d) Payrolls and basic records.

(1) The Contractor and its subcontractors shall maintain payrolls and basic payroll records for all laborers and mechanics working on the contract during the contract and shall make them available to the Government until 3 years after contract completion. The records shall contain the name and address of each employee, social security number, labor classifications, hourly rates of wages paid, daily and weekly number of hours worked, deductions made, and actual wages paid. The records need not duplicate those required for construction work by Department of Labor regulations at 29 CFR 5.5(a)(3) implementing the Davis-Bacon Act.

(2) The Contractor and its subcontractors shall allow authorized representatives of the Contracting Officer or the Department of Labor to inspect, copy, or transcribe records maintained under paragraph (d)(1) of this clause. The Contractor or subcontractor also shall allow authorized representatives of the Contracting Officer or Department of Labor to interview employees in the workplace during working hours.

(e) Subcontracts. The Contractor shall insert the provisions set forth in paragraphs (a) through (d) of this clause in subcontracts exceeding $100,000 and require subcontractors to include these provisions in any lower tier subcontracts. The Contractor shall be responsible for compliance by any subcontractor or lower-tier subcontractor with the provisions set forth in paragraphs (a) through (d) of this clause.

(End of clause)

52.222-6 DAVIS-BACON ACT (FEB 1995)

(a) All laborers and mechanics employed or working upon the site of the work will be paid unconditionally and not less often than once a week, and without subsequent deduction or rebate on any account (except such payroll deductions as are permitted by regulations issued by the Secretary of Labor under the Copeland Act (29 CFR Part 3), the full amount of wages and bona fide fringe benefits (or cash equivalents thereof) due at time of payment computed at rates not less than those contained in the wage determination of the Secretary of Labor which is attached hereto and made a part hereof, regardless of any contractual relationship which may be alleged to exist between the Contractor and such laborers and mechanics. Contributions made or costs reasonably anticipated for bona fide fringe benefits under section 1(b)(2) of the Davis-Bacon Act on behalf of laborers or mechanics are considered wages paid to such laborers or mechanics, subject to the provisions of paragraph (d) of this clause; also, regular contributions made or costs incurred for more than a weekly period (but not less often than quarterly) under plans, funds, or programs which cover the particular weekly period, are deemed to be constructively made or incurred during such period. Such laborers and mechanics shall be paid not less than the appropriate wage rate and fringe benefits in the wage determination for the classification of work actually performed, without regard to skill, except as provided in the clause entitled Apprentices and Trainees. Laborers or mechanics performing work in more than one classification may be compensated at the rate specified for each classification for the time actually worked therein; provided, That the employer's payroll records accurately set forth the time spent in each classification in which work is performed. The wage determination (including any additional classifications and wage rates conformed under paragraph (b) of this clause) and the Davis-Bacon poster (WH-1321) shall be posted at all times by the Contractor and its subcontractors at the site of the work in a prominent and accessible place where it can be easily seen by the workers.

(b)(1) The Contracting Officer shall require that any class of laborers or mechanics which is not listed in the wage determination and which is to be employed under the contract shall be classified in conformance with the wage determination. The Contracting Officer shall approve an additional classification and wage rate and fringe benefits therefor only when all the following criteria have been met:

(i) The work to be performed by the classification requested is not performed by a classification in the wage determination.

(ii) The classification is utilized in the area by the construction industry.

(iii) The proposed wage rate, including any bona fide fringe benefits, bears a reasonable relationship to the wage rates contained in the wage determination.

(2) If the Contractor and the laborers and mechanics to be employed in the classification (if known), or their representatives, and the Contracting Officer agree on the classification and wage rate (including the amount designated for fringe benefits, where appropriate), a report of the action taken shall be sent by the Contracting Officer to the Administrator of the Wage and Hour Division, Employment Standards Administration, U.S. Department of Labor, Washington, DC 20210. The Administrator or an authorized representative will approve, modify, or disapprove every additional classification action within 30 days of receipt and so advise the Contracting Officer or will notify the Contracting Officer within the 30-day period that additional time is necessary.

(3) In the event the Contractor, the laborers or mechanics to be employed in the classification, or their representatives, and the Contracting Officer do not agree on the proposed classification and wage rate (including the amount designated for fringe benefits, where appropriate), the Contracting Officer shall refer the questions, including the views of all interested parties and the recommendation of the Contracting Officer, to the Administrator of the Wage and Hour Division for determination. The Administrator, or an authorized representative, will issue a determination within 30 days of receipt and so advise the Contracting Officer or will notify the Contracting Officer within the 30-day period that additional time is necessary.

(4) The wage rate (including fringe benefits, where appropriate) determined pursuant to subparagraphs (b)(2) and (b)(3) of this clause shall be paid to all workers performing work in the classification under this contract from the first day on which work is performed in the classification.

(c) Whenever the minimum wage rate prescribed in the contract for a class of laborers or mechanics includes a fringe benefit which is not expressed as an hourly rate, the Contractor shall either pay the benefit as stated in the wage determination or shall pay another bona fide fringe benefit or an hourly cash equivalent thereof.

(e) If the Contractor does not make payments to a trustee or other third person, the Contractor may consider as part of the wages of any laborer or mechanic the amount of any costs reasonably anticipated in providing bona fide fringe benefits under a plan or program; provided, That the Secretary of Labor has found, upon the written request of the Contractor, that the applicable standards of the Davis-Bacon Act have been met. The Secretary of Labor may require the Contractor to set aside in a separate account assets for the meeting of obligations under the plan or program.

(End of clause)

52.222-7 WITHHOLDING OF FUNDS (FEB 1988)

The Contracting Officer shall, upon his or her own action or upon written request of an authorized representative of the Department of Labor, withhold or cause to be withheld from the Contractor under this contract or any other Federal contract with the same Prime Contractor, or any other Federally assisted contract subject to Davis-Bacon prevailing wage requirements, which is held by the same Prime Contractor, so much of the accrued payments or advances as may be considered necessary to pay laborers and mechanics, including apprentices, trainees, and helpers, employed by the Contractor or any subcontractor the full amount of wages required by the contract. In the event of failure to pay any laborer or mechanic, including any apprentice, trainee, or helper, employed or working on the site of the work, all or part of the wages required by the contract, the Contracting Officer may, after written notice to the Contractor, take such action as may be necessary to cause the suspension of any further payment, advance, or guarantee of funds until such violations have ceased.

(End of clause)

52.222-8 PAYROLLS AND BASIC RECORDS (FEB 1988)

(a) Payrolls and basic records relating thereto shall be maintained by the Contractor during the course of the work and preserved for a period of 3 years thereafter for all laborers and mechanics working at the site of the work. Such records shall contain the name, address, and social security number of each such worker, his or her correct classification, hourly rates of wages paid (including rates of contributions or costs anticipated for bona fide fringe benefits or cash equivalents thereof of the types described in section 1(b)(2)(B) of the Davis-Bacon Act), daily and weekly number of hours worked, deductions made, and actual wages paid. Whenever the Secretary of Labor has found, under paragraph (d) of the clause entitled Davis-Bacon Act, that the wages of any laborer or mechanic include the amount of any costs reasonably anticipated in providing benefits under a plan or program described in section 1(b)(2)(B) of the Davis-Bacon Act, the Contractor shall maintain records which show that the commitment to provide such benefits is enforceable, that the plan or program is financially responsible, and that the plan or program has been communicated in writing to the laborers or mechanics affected, and records which show the costs anticipated or the actual cost incurred in providing such benefits. Contractors employing apprentices or trainees under approved programs shall maintain written evidence of the registration of apprenticeship programs and certification of trainee programs, the registration of the apprentices and trainees, and the ratios and wage rates prescribed in the applicable programs.

(b)(1) The Contractor shall submit weekly for each week in which any contract work is performed a copy of all payrolls to the Contracting Officer. The payrolls submitted shall set out accurately and completely all of the information required to be maintained under paragraph (a) of this clause. This information may be submitted in any form desired. Optional Form WH-347 (Federal Stock Number 029-005-00014-1) is available for this purpose

and may be purchased from the Superintendent of Documents, U.S. Government Printing Office, Washington, DC 20402. The Prime Contractor is responsible for the submission of copies of payrolls by all subcontractors.

(2) Each payroll submitted shall be accompanied by a "Statement of Compliance," signed by the Contractor or subcontractor or his or her agent who pays or supervises the payment of the persons employed under the contract and shall certify--

(i) That the payroll for the payroll period contains the information required to be maintained under paragraph (a) of this clause and that such information is correct and complete;

(ii) That each laborer or mechanic (including each helper, apprentice, and trainee) employed on the contract during the payroll period has been paid the full weekly wages earned, without rebate, either directly or indirectly, and that no deductions have been made either directly or indirectly from the full wages earned, other than permissible deductions as set forth in the Regulations, 29 CFR Part 3; and

(iii) That each laborer or mechanic has been paid not less than the applicable wage rates and fringe benefits or cash equivalents for the classification of work performed, as specified in the applicable wage determination incorporated into the contract.

(3) The weekly submission of a properly executed certification set forth on the reverse side of Optional Form WH-347 shall satisfy the requirement for submission of the "Statement of Compliance" required by subparagraph (b)(2) of this clause.

(4) The falsification of any of the certifications in this clause may subject the Contractor or subcontractor to civil or criminal prosecution under Section 1001 of Title 18 and Section 3729 of Title 31 of the United States Code.

(c) The Contractor or subcontractor shall make the records required under paragraph (a) of this clause available for inspection, copying, or transcription by the Contracting Officer or authorized representatives of the Contracting Officer or the Department of Labor. The Contractor or subcontractor shall permit the Contracting Officer or representatives of the Contracting Officer or the Department of Labor to interview employees during working hours on the job. If the Contractor or subcontractor fails to submit required records or to make them available, the Contracting Officer may, after written notice to the Contractor, take such action as may be necessary to cause the suspension of any further payment. Furthermore, failure to submit the required records upon request or to make such records available may be grounds for debarment action pursuant to 29 CFR 5.12.

(End of clause)

52.222-9 APPRENTICES AND TRAINEES (FEB 1988)

(a) Apprentices. Apprentices will be permitted to work at less than the predetermined rate for the work they performed when they are employed pursuant to and individually registered in a bona fide apprenticeship program registered with the U.S. Department of Labor, Employment and Training Administration, Bureau of Apprenticeship and Training, or with a State Apprenticeship Agency recognized by the Bureau, or if a person is employed in his or her first 90 days of probationary employment as an apprentice in such an apprenticeship program, who is not individually registered in the program, but who has been certified by the Bureau of Apprenticeship and Training or a State Apprenticeship Agency (where appropriate) to be eligible for probationary employment as an apprentice. The allowable ratio of apprentices to journeymen on the job site in any craft classification shall not be greater than the ratio permitted to the Contractor as to the entire work force under the registered program. Any worker listed on a payroll at an apprentice wage rate, who is not registered or otherwise employed as stated in this paragraph, shall be paid not less than the applicable wage determination for the classification of work actually performed. In addition, any apprentice performing work on the job site in excess of the ratio permitted under the registered program shall be paid not less than the applicable wage rate on the wage determination for the work actually

performed. Where a contractor is performing construction on a project in a locality other than that in which its program is registered, the ratios and wage rates (expressed in percentages of the journeyman's hourly rate) specified in the Contractor's or subcontractor's registered program shall be observed. Every apprentice must be paid at not less than the rate specified in the registered program for the apprentice's level of progress, expressed as a percentage of the journeyman hourly rate specified in the applicable wage determination. Apprentices shall be paid fringe benefits in accordance with the provisions of the apprenticeship program. If the apprenticeship program does not specify fringe benefits, apprentices must be paid the full amount of fringe benefits listed on the wage determination for the applicable classification. If the Administrator determines that a different practice prevails for the applicable apprentice classification, fringes shall be paid in accordance with that determination. In the event the Bureau of Apprenticeship and Training, or a State Apprenticeship Agency recognized by the Bureau, withdraws approval of an apprenticeship program, the Contractor will no longer be permitted to utilize apprentices at less than the applicable predetermined rate for the work performed until an acceptable program is approved.

(b) Trainees. Except as provided in 29 CFR 5.16, trainees will not be permitted to work at less than the predetermined rate for the work performed unless they are employed pursuant to and individually registered in a program which has received prior approval, evidenced by formal certification by the U.S. Department of Labor, Employment and Training Administration. The ratio of trainees to journeymen on the job site shall not be greater than permitted under the plan approved by the Employment and Training Administration. Every trainee must be paid at not less than the rate specified in the approved program for the trainee's level of progress, expressed as a percentage of the journeyman hourly rate specified in the applicable wage determination. Trainees shall be paid fringe benefits in accordance with the provisions of the trainee program. If the trainee program does not mention fringe benefits, trainees shall be paid the full amount of fringe benefits listed in the wage determination unless the Administrator of the Wage and Hour Division determines that there is an apprenticeship program associated with the corresponding journeyman wage rate in the wage determination which provides for less than full fringe benefits for apprentices. Any employee listed on the payroll at a trainee rate who is not registered and participating in a training plan approved by the Employment and Training Administration shall be paid not less than the applicable wage rate in the wage determination for the classification of work actually performed. In addition, any trainee performing work on the job site in excess of the ratio permitted under the registered program shall be paid not less than the applicable wage rate in the wage determination for the work actually performed. In the event the Employment and Training Administration withdraws approval of a training program, the Contractor will no longer be permitted to utilize trainees at less than the applicable predetermined rate for the work performed until an acceptable program is approved.

(c) Equal employment opportunity. The utilization of apprentices, trainees, and journeymen under this clause shall be in conformity with the equal employment opportunity requirements of Executive Order 11246, as amended, and 29 CFR Part 30.

(End of clause)

52.222-10 COMPLIANCE WITH COPELAND ACT REQUIREMENTS (FEB 1988)

The Contractor shall comply with the requirements of 29 CFR Part 3, which are hereby incorporated by reference in this contract.

(End of clause)

52.222-11 SUBCONTRACTS (LABOR STANDARDS (FEB 1988)

(a) The Contractor or subcontractor shall insert in any subcontracts the clauses entitled Davis-Bacon Act, Contract Work Hours and Safety Standards Act-Overtime Compensation, Apprentices and Trainees, Payrolls and Basic Records, Compliance with Copeland Act Requirements, Withholding of Funds, Subcontracts (Labor

Standards), Contract Termination-Debarment, Disputes Concerning Labor Standards, Compliance with Davis-Bacon and Related Act Regulations, and Certification of Eligibility, and such other clauses as the Contracting Officer may, by appropriate instructions, require, and also a clause requiring subcontractors to include these clauses in any lower tier subcontracts. The Prime Contractor shall be responsible for compliance by any subcontractor or lower tier subcontractor with all the contract clauses cited in this paragraph.

(b)(1) Within 14 days after award of the contract, the Contractor shall deliver to the Contracting Officer a completed Statement and Acknowledgment Form (SF 1413) for each subcontract, including the subcontractor's signed and dated acknowledgment that the clauses set forth in paragraph (a) of this clause have been included in the subcontract.

(2) Within 14 days after the award of any subsequently awarded subcontract the Contractor shall deliver to the Contracting Officer an updated completed SF 1413 for such additional subcontract.

(End of clause)

52.222-13 COMPLIANCE WITH DAVIS-BACON AND RELATED ACT REGULATIONS (FEB 1988)

All rulings and interpretations of the Davis-Bacon and Related Acts contained in 29 CFR Parts 1, 3, and 5 are hereby incorporated by reference in this contract.

(End of clause)

52.222-14 DISPUTES CONCERNING LABOR STANDARDS (FEB 1988)

The United States Department of Labor has set forth in 29 CFR Parts 5, 6, and 7 procedures for resolving disputes concerning labor standards requirements. Such disputes shall be resolved in accordance with those procedures and not the Disputes clause of this contract. Disputes within the meaning of this clause include disputes between the Contractor (or any of its subcontractors) and the contracting agency, the U.S. Department of Labor, or the employees or their representatives.

(End of clause)

52.222-15 CERTIFICATION OF ELIGIBILITY (FEB 1988)

(a) By entering into this contract, the Contractor certifies that neither it (nor he or she) nor any person or firm who has an interest in the Contractor's firm is a person or firm ineligible to be awarded Government contracts by virtue of section 3(a) of the Davis-Bacon Act or 29 CFR 5.12(a)(1).

(b) No part of this contract shall be subcontracted to any person or firm ineligible for award of a Government contract by virtue of section 3(a) of the Davis-Bacon Act or 29 CFR 5.12(a)(1).

(c) The penalty for making false statements is prescribed in the U.S. Criminal Code, 18 U.S.C. 1001.

(End of clause)

52.222-21 PROHIBITION OF SEGREGATED FACILITIES (FEB 1999)

(a) Segregated facilities, as used in this clause, means any waiting rooms, work areas, rest rooms and wash rooms, restaurants and other eating areas, time clocks, locker rooms and other storage or dressing areas, parking lots, drinking fountains, recreation or entertainment areas, transportation, and housing facilities provided for employees, that are segregated by explicit directive or are in fact segregated on the basis of race, color, religion, sex, or national origin because of written or oral policies or employee custom. The term does not include separate or single-user rest rooms or necessary dressing or sleeping areas provided to assure privacy between the sexes.

(b) The Contractor agrees that it does not and will not maintain or provide for its employees any segregated facilities at any of its establishments, and that it does not and will not permit its employees to perform their services at any location under its control where segregated facilities are maintained. The Contractor agrees that a breach of this clause is a violation of the Equal Opportunity clause in this contract.

(c) The Contractor shall include this clause in every subcontract and purchase order that is subject to the Equal Opportunity clause of this contract.

(End of clause)

52.222-23 NOTICE OF REQUIREMENT FOR AFFIRMATIVE ACTION TO ENSURE EQUAL EMPLOYMENT OPPORTUNITY FOR CONSTRUCTION (FEB 1999)

(a) The offeror's attention is called to the Equal Opportunity clause and the Affirmative Action Compliance Requirements for Construction clause of this solicitation.

(b) The goals for minority and female participation, expressed in percentage terms for the Contractor's aggregate workforce in each trade on all construction work in the covered area, are as follows:

Goals for minority participation for each trade	Goals for female participation for each trade
27.1%	6.9%

These goals are applicable to all the Contractor's construction work performed in the covered area. If the Contractor performs construction work in a geographical area located outside of the covered area, the Contractor shall apply the goals established for the geographical area where the work is actually performed. Goals are published periodically in the Federal Register in notice form, and these notices may be obtained from any Office of Federal Contract Compliance Programs office.

(c) The Contractor's compliance with Executive Order 11246, as amended, and the regulations in 41 CFR 60-4 shall be based on (1) its implementation of the Equal Opportunity clause, (2) specific affirmative action obligations required by the clause entitled "Affirmative Action Compliance Requirements for Construction," and (3) its efforts to meet the goals. The hours of minority and female employment and training must be substantially uniform throughout the length of the contract, and in each trade. The Contractor shall make a good faith effort to employ minorities and women evenly on each of its projects. The transfer of minority or female employees or trainees from Contractor to Contractor, or from project to project, for the sole purpose of meeting the Contractor's goals shall be a violation of the contract, Executive Order 11246, as amended, and the regulations in 41 CFR 60-4. Compliance with the goals will be measured against the total work hours performed.

(d) The Contractor shall provide written notification to the Deputy Assistant Secretary for Federal Contract Compliance, U.S. Department of Labor, within 10 working days following award of any construction subcontract in

excess of $10,000 at any tier for construction work under the contract resulting from this solicitation. The notification shall list the --

(1) Name, address, and telephone number of the subcontractor;

(2) Employer's identification number of the subcontractor;

(3) Estimated dollar amount of the subcontract;

(4) Estimated starting and completion dates of the subcontract; and

(5) Geographical area in which the subcontract is to be performed.

(e) As used in this Notice, and in any contract resulting from this solicitation, the "covered area" is Langley Air Force Base, VA.

(End of provision)

52.222-26 EQUAL OPPORTUNITY (APR 2002)

(a) Definition. United States, as used in this clause, means the 50 States, the District of Columbia, Puerto Rico, the Northern Mariana Islands, American Samoa, Guam, the U.S. Virgin Islands, and Wake Island.

(b) If, during any 12-month period (including the 12 months preceding the award of this contract), the Contractor has been or is awarded nonexempt Federal contracts and/or subcontracts that have an aggregate value in excess of $10,000, the Contractor shall comply with paragraphs (b)(1) through (b)(11) of this clause, except for work performed outside the United States by employees who were not recruited within the United States. Upon request, the Contractor shall provide information necessary to determine the applicability of this clause.

(1) The Contractor shall not discriminate against any employee or applicant for employment because of race, color, religion, sex, or national origin. However, it shall not be a violation of this clause for the Contractor to extend a publicly announced preference in employment to Indians living on or near an Indian reservation, in connection with employment opportunities on or near an Indian reservation, as permitted by 41 CFR 60-1.5.

(2) The Contractor shall take affirmative action to ensure that applicants are employed, and that employees are treated during employment, without regard to their race, color, religion, sex, or national origin. This shall include, but not be limited to, (i) employment, (ii) upgrading, (iii) demotion, (iv) transfer, (v) recruitment or recruitment advertising, (vi) layoff or termination, (vii) rates of pay or other forms of compensation, and (viii) selection for training, including apprenticeship.

(3) The Contractor shall post in conspicuous places available to employees and applicants for employment the notices to be provided by the Contracting Officer that explain this clause.

(4) The Contractor shall, in all solicitations or advertisements for employees placed by or on behalf of the Contractor, state that all qualified applicants will receive consideration for employment without regard to race, color, religion, sex, or national origin.

(5) The Contractor shall send, to each labor union or representative of workers with which it has a collective bargaining agreement or other contract or understanding, the notice to be provided by the Contracting Officer advising the labor union or workers' representative of the Contractor's commitments under this clause, and post copies of the notice in conspicuous places available to employees and applicants for employment.

(6) The Contractor shall comply with Executive Order 11246, as amended, and the rules, regulations, and orders of the Secretary of Labor.

(7) The Contractor shall furnish to the contracting agency all information required by Executive Order 11246, as amended, and by the rules, regulations, and orders of the Secretary of Labor. The Contractor shall also file Standard Form 100 (EEO-1), or any successor form, as prescribed in 41 CFR part 60-1. Unless the Contractor has filed within the 12 months preceding the date of contract award, the Contractor shall, within 30 days after contract award, apply to either the regional Office of Federal Contract Compliance Programs (OFCCP) or the local office of the Equal Employment Opportunity Commission for the necessary forms.

(8) The Contractor shall permit access to its premises, during normal business hours, by the contracting agency or the OFCCP for the purpose of conducting on-site compliance evaluations and complaint investigations. The Contractor shall permit the Government to inspect and copy any books, accounts, records (including computerized records), and other material that may be relevant to the matter under investigation and pertinent to compliance with Executive Order 11246, as amended, and rules and regulations that implement the Executive Order.

(9) If the OFCCP determines that the Contractor is not in compliance with this clause or any rule, regulation, or order of the Secretary of Labor, this contract may be canceled, terminated, or suspended in whole or in part and the Contractor may be declared ineligible for further Government contracts, under the procedures authorized in Executive Order 11246, as amended. In addition, sanctions may be imposed and remedies invoked against the Contractor as provided in Executive Order 11246, as amended; in the rules, regulations, and orders of the Secretary of Labor; or as otherwise provided by law.

(10) The Contractor shall include the terms and conditions of subparagraphs (b)(1) through (11) of this clause in every subcontract or purchase order that is not exempted by the rules, regulations, or orders of the Secretary of Labor issued under Executive Order 11246, as amended, so that these terms and conditions will be binding upon each subcontractor or vendor.

(11) The Contractor shall take such action with respect to any subcontract or purchase order as the contracting officer may direct as a means of enforcing these terms and conditions, including sanctions for noncompliance; provided, that if the Contractor becomes involved in, or is threatened with, litigation with a subcontractor or vendor as a result of any direction, the Contractor may request the United States to enter into the litigation to protect the interests of the United States.

(c) Notwithstanding any other clause in this contract, disputes relative to this clause will be governed by the procedures in 41 CFR 60-1.1.

(End of clause)

52.222-27 AFFIRMATIVE ACTION COMPLIANCE REQUIREMENTS FOR CONSTRUCTION (FEB 1999)

(a) Definitions. "Covered area," as used in this clause, means the geographical area described in the solicitation for this contract.

"Deputy Assistant Secretary," as used in this clause, means Deputy Assistant Secretary for Federal Contract Compliance, U.S. Department of Labor, or a designee.

"Employer's identification number," as used in this clause, means the Federal Social Security number used on the employer's quarterly federal tax return, U.S. Treasury Department Form 941.

"Minority," as used in this clause, means--

(1) American Indian or Alaskan Native (all persons having origins in any of the original peoples of North America and maintaining identifiable tribal affiliations through membership and participation or community identification).

(2) Asian and Pacific Islander (all persons having origins in any of the original peoples of the Far East, Southeast Asia, the Indian Subcontinent, or the Pacific Islands);

(3) Black (all persons having origins in any of the black African racial groups not of Hispanic origin); and

(4) Hispanic (all persons of Mexican, Puerto Rican, Cuban, Central or South American, or other Spanish culture or origin, regardless of race).

(b) If the Contractor, or a subcontractor at any tier, subcontracts a portion of the work involving any construction trade, each such subcontract in excess of $10,000 shall include this clause and the Notice containing the goals for minority and female participation stated in the solicitation for this contract.

(c) If the Contractor is participating in a Hometown Plan (41 CFR 60-4) approved by the U.S. Department of Labor in a covered area, either individually or through an association, its affirmative action obligations on all work in the plan area (including goals) shall comply with the plan for those trades that have unions participating in the plan. Contractors must be able to demonstrate participation in, and compliance with, the provisions of the plan. Each Contractor or subcontractor participating in an approved plan is also required to comply with its obligations under the Equal Opportunity clause, and to make a good faith effort to achieve each goal under the plan in each trade in which it has employees. The overall good-faith performance by other Contractors or subcontractors toward a goal in an approved plan does not excuse any Contractor's or subcontractor's failure to make good-faith efforts to achieve the plan's goals.

(d) The Contractor shall implement the affirmative action procedures in subparagraphs (g)(1) through (16) of this clause. The goals stated in the solicitation for this contract are expressed as percentages of the total hours of employment and training of minority and female utilization that the Contractor should reasonably be able to achieve in each construction trade in which it has employees in the covered area. If the Contractor performs construction work in a geographical area located outside of the covered area, it shall apply the goals established for the geographical area where that work is actually performed. The Contractor is expected to make substantially uniform progress toward its goals in each craft.

(e) Neither the terms and conditions of any collective bargaining agreement, nor the failure by a union with which the Contractor has a collective bargaining agreement, to refer minorities or women shall excuse the Contractor's obligations under this clause, Executive Order 11246, as amended, or the regulations thereunder.

(f) In order for the nonworking training hours of apprentices and trainees to be counted in meeting the goals, apprentices and trainees must be employed by the Contractor during the training period, and the Contractor must have made a commitment to employ the apprentices and trainees at the completion of their training, subject to the availability of employment opportunities. Trainees must be trained pursuant to training programs approved by the U.S. Department of Labor.

(g) The Contractor shall take affirmative action to ensure equal employment opportunity. The evaluation of the Contractor's compliance with this clause shall be based upon its effort to achieve maximum results from its actions. The Contractor shall document these efforts fully and implement affirmative action steps at least as extensive as the following:

(1) Ensure a working environment free of harassment, intimidation, and coercion at all sites and in all facilities where the Contractor's employees are assigned to work. The Contractor, if possible, will assign two or more women to each construction project. The Contractor shall ensure that foremen, superintendents, and other onsite supervisory personnel are aware of and carry out the Contractor's obligation to maintain such a working

environment, with specific attention to minority or female individuals working at these sites or facilities.

(2) Establish and maintain a current list of sources for minority and female recruitment. Provide written notification to minority and female recruitment sources and community organizations when the Contractor or its unions have employment opportunities available, and maintain a record of the organizations' responses.

(3) Establish and maintain a current file of the names, addresses, and telephone numbers of each minority and female off-the-street applicant, referrals of minorities or females from unions, recruitment sources, or community organizations, and the action taken with respect to each individual. If an individual was sent to the union hiring hall for referral and not referred back to the Contractor by the union or, if referred back, not employed by the
Contractor, this shall be documented in the file, along with whatever additional actions the Contractor may have taken.

(4) Immediately notify the Deputy Assistant Secretary when the union or unions with which the Contractor has a collective bargaining agreement has not referred back to the Contractor a minority or woman sent by the Contractor, or when the Contractor has other information that the union referral process has impeded the Contractor's efforts to meet its obligations.

(5) Develop on-the-job training opportunities and/or participate in training programs for the area that expressly include minorities and women, including upgrading programs and apprenticeship and trainee programs relevant to the Contractor's employment needs, especially those programs funded or approved by the Department of Labor. The Contractor shall provide notice of these programs to the sources compiled under subparagraph (g)(2) of this clause.

(6) Disseminate the Contractor's equal employment policy by--

(i) Providing notice of the policy to unions and to training, recruitment, and outreach programs, and requesting their cooperation in assisting the Contractor in meeting its contract obligations;

(ii) Including the policy in any policy manual and in collective bargaining agreements;

(iii) Publicizing the policy in the company newspaper, annual report, etc.;

(iv) Reviewing the policy with all management personnel and with all minority and female employees at least once a year; and

(v) Posting the policy on bulletin boards accessible to employees at each location where construction work is performed.

(7) Review, at least annually, the Contractor's equal employment policy and affirmative action obligations with all employees having responsibility for hiring, assignment, layoff, termination, or other employment decisions. Conduct review of this policy with all on-site supervisory personnel before initiating construction work at a job site. A written record shall be made and maintained identifying the time and place of these meetings, persons attending, subject matter discussed, and disposition of the subject matter.

(8) Disseminate the Contractor's equal employment policy externally by including it in any advertising in the news media, specifically including minority and female news media. Provide written notification to, and discuss this policy with, other Contractors and subcontractors with which the Contractor does or anticipates doing business.

(9) Direct recruitment efforts, both oral and written, to minority, female, and community organizations, to schools with minority and female students, and to minority and female recruitment and training organizations serving the Contractor's recruitment area and employment needs. Not later than 1 month before the date for acceptance of

applications for apprenticeship or training by any recruitment source, send written notification to organizations such as the above, describing the openings, screening procedures, and tests to be used in the selection process.

(10) Encourage present minority and female employees to recruit minority persons and women. Where reasonable, provide after-school, summer, and vacation employment to minority and female youth both on the site and in other areas of the Contractor's workforce.

(11) Validate all tests and other selection requirements where required under 41 CFR 60-3.

(12) Conduct, at least annually, an inventory and evaluation at least of all minority and female personnel for promotional opportunities. Encourage these employees to seek or to prepare for, through appropriate training, etc., opportunities for promotion.

(13) Ensure that seniority practices, job classifications, work assignments, and other personnel practices do not have a discriminatory effect by continually monitoring all personnel and employment-related activities to ensure that the Contractor's obligations under this contract are being carried out.

(14) Ensure that all facilities and company activities are nonsegregated except that separate or single-user rest rooms and necessary dressing or sleeping areas shall be provided to assure privacy between the sexes.

(15) Maintain a record of solicitations for subcontracts for minority and female construction contractors and suppliers, including circulation of solicitations to minority and female contractor associations and other business associations.

(16) Conduct a review, at least annually, of all supervisors' adherence to and performance under the Contractor's equal employment policy and affirmative action obligations.

(h) The Contractor is encouraged to participate in voluntary associations that may assist in fulfilling one or more of the affirmative action obligations contained in subparagraphs (g)(1) through (16) of this clause. The efforts of a contractor association, joint contractor-union, contractor-community, or similar group of which the contractor is a member and participant may be asserted as fulfilling one or more of its obligations under subparagraphs (g)(1) through (16) of this clause, provided the Contractor--

(1) Actively participates in the group;

(2) Makes every effort to ensure that the group has a positive impact on the employment of minorities and women in the industry;

(3) Ensures that concrete benefits of the program are reflected in the Contractor's minority and female workforce participation;

(4) Makes a good-faith effort to meet its individual goals and timetables; and

(5) Can provide access to documentation that demonstrates the effectiveness of actions taken on behalf of the Contractor. The obligation to comply is the Contractor's, and failure of such a group to fulfill an obligation shall not be a defense for the Contractor's noncompliance.

(i) A single goal for minorities and a separate single goal for women shall be established. The Contractor is required to provide equal employment opportunity and to take affirmative action for all minority groups, both male and female, and all women, both minority and nonminority. Consequently, the Contractor may be in violation of Executive Order 11246, as amended, if a particular group is employed in a substantially disparate manner.

(j) The Contractor shall not use goals or affirmative action standards to discriminate against any person because of

race, color, religion, sex, or national origin.

(k) The Contractor shall not enter into any subcontract with any person or firm debarred from Government contracts under Executive Order 11246, as amended.

(l) The Contractor shall carry out such sanctions and penalties for violation of this clause and of the Equal Opportunity clause, including suspension, termination, and cancellation of existing subcontracts, as may be imposed or ordered under Executive Order 11246, as amended, and its implementing regulations, by the OFCCP. Any failure to carry out these sanctions and penalties as ordered shall be a violation of this clause and Executive Order 11246, as amended.

(m) The Contractor in fulfilling its obligations under this clause shall implement affirmative action procedures at least as extensive as those prescribed in paragraph (g) of this clause, so as to achieve maximum results from its efforts to ensure equal employment opportunity. If the Contractor fails to comply with the requirements of Executive Order 11246, as amended, the implementing regulations, or this clause, the Deputy Assistant Secretary shall take action as prescribed in 41 CFR 60-4.8.

(n) The Contractor shall designate a responsible official to--

(1) Monitor all employment-related activity to ensure that the Contractor's equal employment policy is being carried out;

(2) Submit reports as may be required by the Government; and

(3) Keep records that shall at least include for each employee the name, address, telephone number, construction trade, union affiliation (if any), employee identification number, social security number, race, sex, status (e.g., mechanic, apprentice, trainee, helper, or laborer), dates of changes in status, hours worked per week in the indicated trade, rate of pay, and locations at which the work was performed. Records shall be maintained in an easily understandable and retrievable form; however, to the degree that existing records satisfy this requirement, separate records are not required to be maintained.

Nothing contained herein shall be construed as a limitation upon the application of other laws that establish different standards of compliance or upon the requirements for the hiring of local or other area residents (e.g., those under the Public Works Employment Act of 1977 and the Community Development Block Grant Program).

(End of clause)

52.222-36 AFFIRMATIVE ACTION FOR WORKERS WITH DISABILITIES (JUN 1998)

(a) General. (1) Regarding any position for which the employee or applicant for employment is qualified, the Contractor shall not discriminate against any employee or applicant because of physical or mental disability. The Contractor agrees to take affirmative action to employ, advance in employment, and otherwise treat qualified individuals with disabilities without discrimination based upon their physical or mental disability in all employment practices such as--

(i) Recruitment, advertising, and job application procedures;

(ii) Hiring, upgrading, promotion, award of tenure, demotion, transfer, layoff, termination, right of return from layoff, and rehiring;

(iii) Rates of pay or any other form of compensation and changes in compensation;

(iv) Job assignments, job classifications, organizational structures, position descriptions, lines of progression, and seniority lists;

(v) Leaves of absence, sick leave, or any other leave;

(vi) Fringe benefits available by virtue of employment, whether or not administered by the Contractor;

(vii) Selection and financial support for training, including apprenticeships, professional meetings, conferences, and other related activities, and selection for leaves of absence to pursue training;

(viii) Activities sponsored by the Contractor, including social or recreational programs; and

(ix) Any other term, condition, or privilege of employment.

(2) The Contractor agrees to comply with the rules, regulations, and relevant orders of the Secretary of Labor (Secretary) issued under the Rehabilitation Act of 1973 (29 U.S.C. 793) (the Act), as amended.

(b) Postings. (1) The Contractor agrees to post employment notices stating--

(i) The Contractor's obligation under the law to take affirmative action to employ and advance in employment qualified individuals with disabilities; and

(ii) The rights of applicants and employees.

(2) These notices shall be posted in conspicuous places that are available to employees and applicants for employment. The Contractor shall ensure that applicants and employees with disabilities are informed of the contents of the notice (e.g., the Contractor may have the notice read to a visually disabled individual, or may lower the posted notice so that it might be read by a person in a wheelchair). The notices shall be in a form prescribed by the Deputy Assistant Secretary for Federal Contract Compliance of the U.S. Department of Labor (Deputy Assistant Secretary) and shall be provided by or through the Contracting Officer.

(3) The Contractor shall notify each labor union or representative of workers with which it has a collective bargaining agreement or other contract understanding, that the Contractor is bound by the terms of Section 503 of the Act and is committed to take affirmative action to employ, and advance in employment, qualified individuals with physical or mental disabilities.

(c) Noncompliance. If the Contractor does not comply with the requirements of this clause, appropriate actions may be taken under the rules, regulations, and relevant orders of the Secretary issued pursuant to the Act.

(d) Subcontracts. The Contractor shall include the terms of this clause in every subcontract or purchase order in excess of $10,000 unless exempted by rules, regulations, or orders of the Secretary. The Contractor shall act as specified by the Deputy Assistant Secretary to enforce the terms, including action for noncompliance.

(End of clause)

52.223-3 HAZARDOUS MATERIAL IDENTIFICATION AND MATERIAL SAFETY DATA (JAN 1997)

(a) "Hazardous material", as used in this clause, includes any material defined as hazardous under the latest version of Federal Standard No. 313 (including revisions adopted during the term of the contract).

(b) The offeror must list any hazardous material, as defined in paragraph (a) of this clause, to be delivered under this contract. The hazardous material shall be properly identified and include any applicable identification number,

such as National Stock Number or Special Item Number. This information shall also be included on the Material Safety Data Sheet submitted under this contract.

Material (If none, insert "None")	Identification No.
_____	_____
_____	_____
_____	_____

(c) This list must be updated during performance of the contract whenever the Contractor determines that any other material to be delivered under this contract is hazardous.

(d) The apparently successful offeror agrees to submit, for each item as required prior to award, a Material Safety Data Sheet, meeting the requirements of 29 CFR 1910.1200(g) and the latest version of Federal Standard No. 313, for all hazardous material identified in paragraph (b) of this clause. Data shall be submitted in accordance with Federal Standard No. 313, whether or not the apparently successful offeror is the actual manufacturer of these items. Failure to submit the Material Safety Data Sheet prior to award may result in the apparently successful offeror being considered nonresponsible and ineligible for award.

(e) If, after award, there is a change in the composition of the item(s) or a revision to Federal Standard No. 313, which renders incomplete or inaccurate the data submitted under paragraph (d) of this clause, the Contractor shall promptly notify the Contracting Officer and resubmit the data.

(f) Neither the requirements of this clause nor any act or failure to act by the Government shall relieve the Contractor of any responsibility or liability for the safety of Government, Contractor, or subcontractor personnel or property.

(g) Nothing contained in this clause shall relieve the Contractor from complying with applicable Federal, State, and local laws, codes, ordinances, and regulations (including the obtaining of licenses and permits) in connection with hazardous material.

(h) The Government's rights in data furnished under this contract with respect to hazardous material are as follows:

(1) To use, duplicate and disclose any data to which this clause is applicable. The purposes of this right are to--

(i) Apprise personnel of the hazards to which they may be exposed in using, handling, packaging, transporting, or disposing of hazardous materials;

(ii) Obtain medical treatment for those affected by the material; and

(iii) Have others use, duplicate, and disclose the data for the Government for these purposes.

(2) To use, duplicate, and disclose data furnished under this clause, in accordance with subparagraph (h)(1) of this clause, in precedence over any other clause of this contract providing for rights in data.

(3) The Government is not precluded from using similar or identical data acquired from other sources.

(End of clause)

52.223-6 DRUG-FREE WORKPLACE (MAY 2001)

(a) Definitions. As used in this clause --

"Controlled substance" means a controlled substance in schedules I through V of section 202 of the Controlled Substances Act (21 U.S.C. 812) and as further defined in regulation at 21 CFR 1308.11 - 1308.15.

"Conviction" means a finding of guilt (including a plea of nolo contendere) or imposition of sentence, or both, by any judicial body charged with the responsibility to deter- mine violations of the Federal or State criminal drug statutes.

"Criminal drug statute" means a Federal or non-Federal criminal statute involving the manufacture, distribution, dispensing, possession, or use of any controlled substance.

"Drug-free workplace" means the site(s) for the performance of work done by the Contractor in connection with a specific contract at which employees of the Contractor are prohibited from engaging in the unlawful manufacture, distribution, dispensing, possession, or use of a controlled substance.

"Employee" means an employee of a Contractor directly engaged in the performance of work under a Government contract. "Directly engaged" is defined to include all direct cost employees and any other Contractor employee who has other than a minimal impact or involvement in contract performance.

"Individual" means an offeror/contractor that has no more than one employee including the offeror/contractor.

(b) The Contractor, if other than an individual, shall-- within 30 days after award (unless a longer period is agreed to in writing for contracts of 30 days or more performance duration), or as soon as possible for contracts of less than 30 days performance duration--

(1) Publish a statement notifying its employees that the unlawful manufacture, distribution, dispensing, possession, or use of a controlled substance is prohibited in the Contractor's workplace and specifying the actions that will be taken against employees for violations of such prohibition;

(2) Establish an ongoing drug-free awareness program to inform such employees about--

(i) The dangers of drug abuse in the workplace;

(ii) The Contractor's policy of maintaining a drug-free workplace;

(iii) Any available drug counseling, rehabilitation, and employee assistance programs; and

(iv) The penalties that may be imposed upon employees for drug abuse violations occurring in the workplace;

(3) Provide all employees engaged in performance of the contract with a copy of the statement required by subparagraph (b)(1) of this clause;

(4) Notify such employees in writing in the statement required by subparagraph (b)(1) of this clause that, as a condition of continued employment on this contract, the employee will--

(i) Abide by the terms of the statement; and

(ii) Notify the employer in writing of the employee's conviction under a criminal drug statute for a violation occurring in the workplace no later than 5 days after such conviction.

(5) Notify the Contracting Officer in writing within 10 days after receiving notice under subdivision (b)(4)(ii) of this clause, from an employee or otherwise receiving actual notice of such conviction. The notice shall include the position title of the employee;

(6) Within 30 days after receiving notice under subdivision (b)(4)(ii) of this clause of a conviction, take one of the following actions with respect to any employee who is convicted of a drug abuse violation occurring in the workplace:

(i) Taking appropriate personnel action against such employee, up to and including termination; or

(ii) Require such employee to satisfactorily participate in a drug abuse assistance or rehabilitation program approved for such purposes by a Federal, State, or local health, law enforcement, or other appropriate agency; and

(7) Make a good faith effort to maintain a drug-free workplace through implementation of subparagraphs (b)(1) though (b)(6) of this clause.

(c) The Contractor, if an individual, agrees by award of the contract or acceptance of a purchase order, not to engage in the unlawful manufacture, distribution, dispensing, possession, or use of a controlled substance while performing this contract.

(d) In addition to other remedies available to the Government, the Contractor's failure to comply with the requirements of paragraph (b) or (c) of this clause may, pursuant to FAR 23.506, render the Contractor subject to suspension of contract payments, termination of the contract for default, and suspension or debarment.

(End of clause)

52.223-14 TOXIC CHEMICAL RELEASE REPORTING (OCT 2000)

(a) Unless otherwise exempt, the Contractor, as owner or operator of a facility used in the performance of this contract, shall file by July 1 for the prior calendar year an annual Toxic Chemical Release Inventory Form (Form R) as described in sections 313(a) and (g) of the Emergency Planning and Community Right-to-Know Act of 1986 (EPCRA) (42 U.S.C. 11023(a) and (g)), and section 6607 of the Pollution Prevention Act of 1990 (PPA) (42 U.S.C. 13106). The Contractor shall file, for each facility subject to the Form R filing and reporting requirements, the annual Form R throughout the life of the contract.

(b) A Contractor owned or operated facility used in the performance of this contract is exempt from the requirement to file an annual Form R if--

(1) The facility does not manufacture, process, or otherwise use any toxic chemicals listed under section 313(c) of EPCRA, 42 U.S.C. 11023(c);

(2) The facility does not have 10 or more full-time employees as specified in section 313(b)(1)(A) of EPCRA, 42 U.S.C. 11023(b)(1)(A);

(3) The facility does not meet the reporting thresholds of toxic chemicals established under of EPCRA, 42 U.S.C. 11023(f) (including the alternate thresholds at 40 CFR 372.27, provided an appropriate certification form has been filed with EPA);

(4) The facility does not fall within Standard Industrial Classification Code (SIC) major groups 20 through 39 or their corresponding North American Industry Classification System (NAICS) sectors 31 through 33; or

(5) The facility is not located within any State of the United States, the District of Columbia, the Commonwealth of Puerto Rico, Guam, American Samoa, the United States Virgin Islands, the Northern Mariana Islands, or any other territory or possession over which the United States has jurisdiction.

(c) If the Contractor has certified to an exemption in accordance with one or more of the criteria in paragraph (b) of this clause, and after award of the contract circumstances change so that any of its owned or operated facilities used in the performance of this contract is no longer exempt--

(1) The Contractor shall notify the Contracting Officer; and

(2) The Contractor, as owner or operator of a facility used in the performance of this contract that is no longer exempt, shall (i) submit a Toxic Chemical Release Inventory Form (Form R) on or before July 1 for the prior calendar year during which the facility becomes eligible; and (ii) continue to file the annual Form R for the life of the contract for such facility.

(d) The Contracting Officer may terminate this contract or take other action as appropriate, if the Contractor fails to comply accurately and fully with the EPCRA and PPA toxic chemical release filing and reporting requirements.

(e) Except for acquisitions of commercial items, as defined in FAR Part 2, the Contractor shall--

(1) For competitive subcontracts expected to exceed $100,000 (including all options), include a solicitation provision substantially the same as the provision at FAR 52.223-13, Certification of Toxic Chemical Release Reporting; and

(2) Include in any resultant subcontract exceeding $100,000 (including all options), the substance of this clause, except this paragraph (e).

(End of clause)

52.225-9 BUY AMERICAN ACT—CONSTRUCTION MATERIALS (MAY 2002)

(a) Definitions. As used in this clause--

Component means an article, material, or supply incorporated directly into a construction material.

Construction material means an article, material, or supply brought to the construction site by the Contractor or a subcontractor for incorporation into the building or work. The term also includes an item brought to the site preassembled from articles, materials, or supplies. However, emergency life safety systems, such as emergency lighting, fire alarm, and audio evacuation systems, that are discrete systems incorporated into a public building or work and that are produced as complete systems, are evaluated as a single and distinct construction material regardless of when or how the individual parts or components of those systems are delivered to the construction site. Materials purchased directly by the Government are supplies, not construction material.

Cost of components means--

(1) For components purchased by the Contractor, the acquisition cost, including transportation costs to the place of incorporation into the end product (whether or not such costs are paid to a domestic firm), and any applicable duty (whether or not a duty-free entry certificate is issued); or

(2) For components manufactured by the Contractor, all costs associated with the manufacture of the component, including transportation costs as described in paragraph (1) of this definition, plus allocable overhead costs, but excluding profit. Cost of components does not include any costs associated with the

manufacture of the end product.

Domestic construction material means--

(1) An unmanufactured construction material mined or produced in the United States; or

(2) A construction material manufactured in the United States, if the cost of its components mined, produced, or manufactured in the United States exceeds 50 percent of the cost of all its components. Components of foreign origin of the same class or kind for which nonavailability determinations have been made are treated as domestic.

Foreign construction material means a construction material other than a domestic construction material.

United States means the 50 States and the District of Columbia, U.S. territories and possessions, Puerto Rico, the Northern Mariana Islands, and any other place subject to U.S. jurisdiction, but does not include leased bases.

(b) Domestic preference. (1) This clause implements the Buy American Act (41 U.S.C. 10a-10d) by providing a preference for domestic construction material. The Contractor shall use only domestic construction material in performing this contract, except as provided in paragraphs (b)(2) and (b)(3) of this clause.

(2) This requirement does not apply to the construction material or components listed by the Government as follows: NONE [Contracting Officer to list applicable excepted materials or indicate “none”]

(3) The Contracting Officer may add other foreign construction material to the list in paragraph (b)(2) of this clause if the Government determines that

(i) The cost of domestic construction material would be unreasonable. The cost of a particular domestic construction material subject to the requirements of the Buy American Act is unreasonable when the cost of such material exceeds the cost of foreign material by more than 6 percent;

(ii) The application of the restriction of the Buy American Act to a particular construction material would be impracticable or inconsistent with the public interest; or

(iii) The construction material is not mined, produced, or manufactured in the United States in sufficient and reasonably available commercial quantities of a satisfactory quality.

(c) Request for determination of inapplicability of the Buy American Act. (1)(i) Any Contractor request to use foreign construction material in accordance with paragraph (b)(3) of this clause shall include adequate information for Government evaluation of the request, including--

(A) A description of the foreign and domestic construction materials;

(B) Unit of measure;

(C) Quantity;

(D) Price;

(E) Time of delivery or availability;

(F) Location of the construction project;

(G) Name and address of the proposed supplier; and

(H) A detailed justification of the reason for use of foreign construction materials cited in accordance with paragraph (b)(3) of this clause.

(ii) A request based on unreasonable cost shall include a reasonable survey of the market and a completed price comparison table in the format in paragraph (d) of this clause.

(iii) The price of construction material shall include all delivery costs to the construction site and any applicable duty (whether or not a duty-free certificate may be issued).

(iv) Any Contractor request for a determination submitted after contract award shall explain why the Contractor could not reasonably foresee the need for such determination and could not have requested the determination before contract award. If the Contractor does not submit a satisfactory explanation, the Contracting Officer need not make a determination.

(2) If the Government determines after contract award that an exception to the Buy American Act applies and the Contracting Officer and the Contractor negotiate adequate consideration, the Contracting Officer will modify the contract to allow use of the foreign construction material. However, when the basis for the exception is the unreasonable price of a domestic construction material, adequate consideration is not less than the differential established in paragraph (b)(3)(i) of this clause.

(3) Unless the Government determines that an exception to the Buy American Act applies, use of foreign construction material is noncompliant with the Buy American Act.

(d) Data. To permit evaluation of requests under paragraph (c) of this clause based on unreasonable cost, the Contractor shall include the following information and any applicable supporting data based on the survey of suppliers:

Foreign and Domestic Construction Materials Price Comparison

Construction material description	Unit of measure	Quantity	Price (dollars) \1\
Item 1			
Foreign construction material....	.....	.....	.....
Domestic construction material...	.....	.....	.....
Item 2			
Foreign construction material....	.....	.....	.....
Domestic construction material...	.....	.....	.....

Include all delivery costs to the construction site and any applicable duty (whether or not a duty-free entry certificate is issued).
List name, address, telephone number, and contact for suppliers surveyed. Attach copy of response; if oral, attach summary.
Include other applicable supporting information.

(End of clause)

52.225-13 RESTRICTIONS ON CERTAIN FOREIGN PURCHASES (JUL 2000)

(a) The Contractor shall not acquire, for use in the performance of this contract, any supplies or services originating from sources within, or that were located in or transported from or through, countries whose products are banned from importation into the United States under regulations of the Office of Foreign Assets Control,

Department of the Treasury. Those countries are Cuba, Iran, Iraq, Libya, North Korea, Sudan, the territory of Afghanistan controlled by the Taliban, and Serbia (excluding the territory of Kosovo).

(b) The Contractor shall not acquire for use in the performance of this contract any supplies or services from entities controlled by the government of Iraq.

(c) The Contractor shall insert this clause, including this paragraph (c), in all subcontracts.

(End of clause)

52.226-1 UTILIZATION OF INDIAN ORGANIZATIONS AND INDIAN-OWNED ECONOMIC ENTERPRISES (JUN 2000)

(a) Definitions. As used in this clause:

"Indian" means any person who is a member of any Indian tribe, band, group, pueblo or community that is recognized by the Federal Government as eligible for services from the Bureau of Indian Affairs (BIA) in accordance with 25 U.S.C. 1452(c) and any ``Native" as defined in the Alaska Native Claims Settlement Act (43 U.S.C. 1601).

"Indian organization" means the governing body of any Indian tribe or entity established or recognized by the governing body of an Indian tribe for the purposes of 25 U.S.C., chapter 17.

"Indian-owned economic enterprise" means any Indian-owned (as determined by the Secretary of the Interior) commercial, industrial, or business activity established or organized for the purpose of profit, provided that Indian ownership constitutea not less than 51 percent of the enterprise.

"Indian tribe" means any Indian tribe, band, group, pueblo or community, including native villages and native groups (including corporations organized by Kenai, Juneau, Sitka, and Kodiak) as defined in the Alaska Native Claims Settlement Act, that is recognized by the Federal Government as eligible for services from BIA in accordance with 25 U.S.C. 1542(c).

"Interested party" means a prime contractor or an actual or prospective offeror whose direct economic interest would be affected by the award of a subcontract or by the failure to award a subcontract.

(b) The Contractor shall use its best efforts to give Indian organizations and Indian-owned economic enterprises (25 U.S.C. 1544) the maximum practicable opportunity to participate in the subcontracts it awards to the fullest extent consistent with efficient performance of its contract.

(1) The Contracting Officer and the Contractor, acting in good faith, may rely on the representation of an Indian organization or Indian-owned economic enterprise as to its eligibility, unless an interested party challenges its status or the Contracting Officer has independent reason to question that status. In the event of a challenge to the representation of a subcontractor, the Contracting Officer will refer the matter to the U.S. Department of the Interior, Bureau of Indian Affairs (BIA), Attn: Chief, Division of Contracting and Grants Administration, 1849 C Street, NW., MS 2626-MIB, Washington, DC 20240-4000.

The BIA will determine the eligibility and notify the Contracting Officer. No incentive payment will be made within 50 working days of subcontract award or while a challenge is pending. If a subcontractor is determined to be an ineligible participant, no incentive payment will be made under the Indian Incentive Program.

(2) The Contractor may request an adjustment under the Indian Incentive Program to the following:

(i) The estimated cost of a cost-type contract.

(ii) The target cost of a cost-plus-incentive-fee prime contract.

(iii) The target cost and ceiling price of a fixed-price incentive prime contract.

(iv) The price of a firm-fixed-price prime contract.

(3) The amount of the adjustment to the prime contract is 5 percent of the estimated cost, target cost, or firm-fixed-price included in the subcontract initially awarded to the Indian organization or Indian-owned economic enterprise.

(4) The Contractor has the burden of proving the amount claimed and must assert its request for an adjustment prior to completion of contract performance.

(c) The Contracting Officer, subject to the terms and conditions of the contract and the availability of funds, will authorize an incentive payment of 5 percent of the amount paid to the subcontractor. The Contracting Officer will seek funding in accordance with agency procedures.

(End of clause)

52.227-1 AUTHORIZATION AND CONSENT (JUL 1995)

(a) The Government authorizes and consents to all use and manufacture, in performing this contract or any subcontract at any tier, of any invention described in and covered by a United States patent (1) embodied in the structure or composition of any article the delivery of which is accepted by the Government under this contract or (2) used in machinery, tools, or methods whose use necessarily results from compliance by the Contractor or a subcontractor with (i) specifications or written provisions forming a part of this contract or (ii) specific written instructions given by the Contracting Officer directing the manner of performance. The entire liability to the Government for infringement of a patent of the United States shall be determined solely by the provisions of the indemnity clause, if any, included in this contract or any subcontract hereunder (including any lower-tier subcontract), and the Government assumes liability for all other infringement to the extent of the authorization and consent hereinabove granted.

(b) The Contractor agrees to include, and require inclusion of, this clause, suitably modified to identify the parties, in all subcontracts at any tier for supplies or services (including construction, architect-engineer services, and materials, supplies, models, samples, and design or testing services expected to exceed the simplified acquisition threshold (however, omission of this clause from any subcontract, including those at or below the simplified acquisition threshold, does not affect this authorization and consent.)

(End of clause)

52.227-4 PATENT INDEMNITY--CONSTRUCTION CONTRACTS (APR 1984)

Except as otherwise provided, the Contractor agrees to indemnify the Government and its officers, agents, and employees against liability, including costs and expenses, for infringement upon any United States patent (except a patent issued upon an application that is now or may hereafter be withheld from issue pursuant to a Secrecy Order under 35 U.S.C. 181) arising out of performing this contract or out of the use or disposal by or for the account of

the Government of supplies furnished or work performed under this contract.

(End of clause)

52.228-2 ADDITIONAL BOND SECURITY (OCT 1997)

The Contractor shall promptly furnish additional security required to protect the Government and persons supplying labor or materials under this contract if--

(a) Any surety upon any bond, or issuing financial institution for other security, furnished with this contract becomes unacceptable to the Government.

(b) Any surety fails to furnish reports on its financial condition as required by the Government;

(c) The contract price is increased so that the penal sum of any bond becomes inadequate in the opinion of the Contracting Officer; or

(d) An irrevocable letter of credit (ILC) used as security will expire before the end of the period of required security. If the Contractor does not furnish an acceptable extension or replacement ILC, or other acceptable substitute, at least 30 days before an ILC's scheduled expiration, the Contracting officer has the right to immediately draw on the ILC.

(End of clause)

52.228-5 INSURANCE--WORK ON A GOVERNMENT INSTALLATION (JAN 1997)

(a) The Contractor shall, at its own expense, provide and maintain during the entire performance of this contract, at least the kinds and minimum amounts of insurance required in the Schedule or elsewhere in the contract.

(b) Before commencing work under this contract, the Contractor shall notify the Contracting Officer in writing that the required insurance has been obtained. The policies evidencing required insurance shall contain an endorsement to the effect that any cancellation or any material change adversely affecting the Government's interest shall not be effective (1) for such period as the laws of the State in which this contract is to be performed prescribe, or (2) until 30 days after the insurer or the Contractor gives written notice to the Contracting Officer, whichever period is longer.

(c) The Contractor shall insert the substance of this clause, including this paragraph (c), in subcontracts under this contract that require work on a Government installation and shall require subcontractors to provide and maintain the insurance required in the Schedule or elsewhere in the contract. The Contractor shall maintain a copy of all subcontractors' proofs of required insurance, and shall make copies available to the Contracting Officer upon request.

(End of clause)

52.228-11 PLEDGES OF ASSETS (FEB 1992)

(a) Offerors shall obtain from each person acting as an individual surety on a bid guarantee, a performance bond, or a payment bond--

(1) Pledge of assets; and

(2) Standard Form 28, Affidavit of Individual Surety.

(b) Pledges of assets from each person acting as an individual surety shall be in the form of--

(1) Evidence of an escrow account containing cash, certificates of deposit, commercial or Government securities, or other assets described in FAR 28.203-2 (except see 28.203-2(b)(2) with respect to Government securities held in book entry form) and/or;

(2) A recorded lien on real estate. The offeror will be required to provide--

(i) Evidence of title in the form of a certificate of title prepared by a title insurance company approved by the United States Department of Justice. This title evidence must show fee simple title vested in the surety along with any concurrent owners; whether any real estate taxes are due and payable; and any recorded encumbrances against the property, including the lien filed in favor of the Government as required by FAR 28.203-3(d);

(ii) Evidence of the amount due under any encumbrance shown in the evidence of title;

(iii) A copy of the current real estate tax assessment of the property or a current appraisal dated no earlier than 6 months prior to the date of the bond, prepared by a professional appraiser who certifies that the appraisal has been conducted in accordance with the generally accepted appraisal standards as reflected in the Uniform Standards of Professional Appraisal Practice, as promulgated by the Appraisal Foundation.

(End of clause)

52.228-12 PROSPECTIVE SUBCONTRACTOR REQUESTS FOR BONDS. (OCT 1995)

In accordance with Section 806(a)(3) of Pub. L. 102-190, as amended by Sections 2091 and 8105 of Pub. L. 103-355, upon the request of a prospective subcontractor or supplier offering to furnish labor or material for the performance of this contract for which a payment bond has been furnished to the Government pursuant to the Miller Act, the Contractor shall promptly provide a copy of such payment bond to the requester.

(End of clause)

52.228-13 ALTERNATIVE PAYMENT PROTECTIONS (JULY 2000)

(a) The Contractor shall submit one of the following payment protections:

(i) a payment bond or (ii) an irrevocable letter of credit .

(b) The amount of the payment protection shall be 100 percent of the contract price.

(c) The submission of the payment protection is required within 10 calendar days of contract award.

(d) The payment protection shall provide protection for the full contract performance period plus a one-year period.

(e) Except for escrow agreements and payment bonds, which provide their own protection procedures, the Contracting Officer is authorized to access funds under the payment protection when it has been alleged in writing by a supplier of labor or material that a nonpayment has occurred, and to withhold such funds pending resolution by administrative or judicial proceedings or mutual agreement of the parties.

(f) When a tripartite escrow agreement is used, the Contractor shall utilize only suppliers of labor and material that signed the escrow agreement.

(End of clause)

52.228-14 IRREVOCABLE LETTER OF CREDIT (DEC 1999)

(a) “Irrevocable letter of credit” (ILC), as used in this clause, means a written commitment by a federally insured financial institution to pay all or part of a stated amount of money, until the expiration date of the letter, upon presentation by the Government (the beneficiary) of a written demand therefor. Neither the financial institution nor the offeror/Contractor can revoke or condition the letter of credit.

(b) If the offeror intends to use an ILC in lieu of a bid bond, or to secure other types of bonds such as performance and payment bonds, the letter of credit and letter of confirmation formats in paragraphs (e) and (f) of this clause shall be used.

(c) The letter of credit shall be irrevocable, shall require presentation of no document other than a written demand and the ILC (including confirming letter, if any), shall be issued/confirmed by an acceptable federally insured financial institution as provided in paragraph (d) of this clause, and--

(1) If used as a bid guarantee, the ILC shall expire no earlier than 60 days after the close of the bid acceptance period;

(2) If used as an alternative to corporate or individual sureties as security for a performance or payment bond, the offeror/Contractor may submit an ILC with an initial expiration date estimated to cover the entire period for which financial security is required or may submit an ILC with an initial expiration date that is a minimum period of one year from the date of issuance. The ILC shall provide that, unless the issuer provides the beneficiary written notice of non-renewal at least 60 days in advance of the current expiration date, the ILC is automatically extended without amendment for one year from the expiration date, or any future expiration date, until the period of required coverage is completed and the Contracting Officer provides the financial institution with a written statement waiving the right to payment. The period of required coverage shall be:

(i) For contracts subject to the Miller Act, the later of--

(A) One year following the expected date of final payment;

(B) For performance bonds only, until completion of any warranty period; or

(C) For payment bonds only, until resolution of all claims filed against the payment bond during the one-year period following final payment.

(ii) For contracts not subject to the Miller Act, the later of--

(A) 90 days following final payment; or

(B) For performance bonds only, until completion of any warranty period.

(d) Only federally insured financial institutions rated investment grade or higher shall issue or confirm the ILC. The offeror/Contractor shall provide the Contracting Officer a credit rating that indicates the financial institution has the required rating(s) as of the date of issuance of the ILC. Unless the financial institution issuing the ILC had

letter of credit business of less than $25 million in the past year, ILCs over $5 million must be confirmed by another acceptable financial institution that had letter of credit business of less than $25 million in the past year.

(e) The following format shall be used by the issuing financial institution to create an ILC:

_____

[Issuing Financial Institution's Letterhead or Name and Address]

Issue Date _____

IRREVOCABLE LETTER OF CREDIT NO. _____

Account party's name _____

Account party's address _____

For Solicitation No. _____(for reference only)

TO: [U.S. Government agency]

[U.S. Government agency's address]

1. We hereby establish this irrevocable and transferable Letter of Credit in your favor for one or more drawings up to United States $_____. This Letter of Credit is payable at [issuing financial institution's and, if any, confirming financial institution's] office at [issuing financial institution's address and, if any, confirming financial institution's address] and expires with our close of business on _____, or any automatically extended expiration date.

2. We hereby undertake to honor your or the transferee's sight draft(s) drawn on the issuing or, if any, the confirming financial institution, for all or any part of this credit if presented with this Letter of Credit and confirmation, if any, at the office specified in paragraph 1 of this Letter of Credit on or before the expiration date or any automatically extended expiration date.

3. [This paragraph is omitted if used as a bid guarantee, and subsequent paragraphs are renumbered.] It is a condition of this Letter of Credit that it is deemed to be automatically extended without amendment for one year from the expiration date hereof, or any future expiration date, unless at least 60 days prior to any expiration date, we notify you or the transferee by registered mail, or other receipted means of delivery, that we elect not to consider this Letter of Credit renewed for any such additional period. At the time we notify you, we also agree to notify the account party (and confirming financial institution, if any) by the same means of delivery.

4. This Letter of Credit is transferable. Transfers and assignments of proceeds are to be effected without charge to either the beneficiary or the transferee/assignee of proceeds. Such transfer or assignment shall be only at the written direction of the Government (the beneficiary) in a form satisfactory to the issuing financial institution and the confirming financial institution, if any.

5. This Letter of Credit is subject to the Uniform Customs and Practice (UCP) for Documentary Credits, 1993 Revision, International Chamber of Commerce Publication No. 500, and to the extent not inconsistent therewith, to the laws of _____ [state of confirming financial institution, if any, otherwise state of issuing financial institution].

6. If this credit expires during an interruption of business of this financial institution as described in Article 17 of the UCP, the financial institution specifically agrees to effect payment if this credit is drawn against within 30

days after the resumption of our business.

Sincerely,

_____

[Issuing financial institution]

(f) The following format shall be used by the financial institution to confirm an ILC:

_____
[Confirming Financial Institution's Letterhead or Name and Address]

(Date) _____

Our Letter of Credit Advice Number _____

Beneficiary: _____ [U.S. Government agency]

Issuing Financial Institution: _____

Issuing Financial Institution's LC No.: _____

Gentlemen:

1. We hereby confirm the above indicated Letter of Credit, the original of which is attached, issued by _____ [name of issuing financial institution] for drawings of up to United States dollars _____/U.S. $_____ and expiring with our close of business on _____ [the expiration date], or any automatically extended expiration date.

2. Draft(s) drawn under the Letter of Credit and this Confirmation are payable at our office located at _____.

3. We hereby undertake to honor sight draft(s) drawn under and presented with the Letter of Credit and this Confirmation at our offices as specified herein.

4. [This paragraph is omitted if used as a bid guarantee, and subsequent paragraphs are renumbered.] It is a condition of this confirmation that it be deemed automatically extended without amendment for one year from the expiration date hereof, or any automatically extended expiration date, unless:

(a) At least 60 days prior to any such expiration date, we shall notify the Contracting Officer, or the transferee and the issuing financial institution, by registered mail or other receipted means of delivery, that we elect not to consider this confirmation extended for any such additional period; or

(b) The issuing financial institution shall have exercised its right to notify you or the transferee, the account party, and ourselves, of its election not to extend the expiration date of the Letter of Credit.

5. This confirmation is subject to the Uniform Customs and Practice (UCP) for Documentary Credits, 1993 Revision, International Chamber of Commerce Publication No. 500, and to the extent not inconsistent therewith, to the laws of _____ [state of confirming financial institution].

6. If this confirmation expires during an interruption of business of this financial institution as described in Article 17 of the UCP, we specifically agree to effect payment if this credit is drawn against within 30 days after the

resumption of our business.

Sincerely,

_____

[Confirming financial institution]

(g) The following format shall be used by the Contracting Officer for a sight draft to draw on the Letter of Credit:

SIGHT DRAFT

_____

[City, State]

(Date) _____

[Name and address of financial institution]

Pay to the order of _____ [Beneficiary Agency] _____ the sum of United States $_____. This draft is drawn under Irrevocable Letter of Credit No. _____.

_____

[Beneficiary Agency]

By: _____

(End of clause)

52.228-15 PERFORMANCE AND PAYMENT BONDS--CONSTRUCTION (JUL 2000)-

(a) Definitions. As used in this clause--

Original contract price means the award price of the contract; or, for requirements contracts, the price payable for the estimated total quantity; or, for indefinite-quantity contracts, the price payable for the specified minimum quantity. Original contract price does not include the price of any options, except those options exercised at the time of contract award.

(b) Amount of required bonds. Unless the resulting contract price is $100,000 or less, the successful offeror shall furnish performance and payment bonds to the Contracting Officer as follows:

(1) Performance bonds (Standard Form 25). The penal amount of performance bonds at the time of contract award shall be 100 percent of the original contract price.

(2) Payment Bonds (Standard Form 25-A). The penal amount of payment bonds at the time of contract award shall be 100 percent of the original contract price.

(3) Additional bond protection. (i) The Government may require additional performance and payment bond protection if the contract price is increased. The increase in protection generally will equal 100 percent of the increase in contract price.

(ii) The Government may secure the additional protection by directing the Contractor to increase the penal amount of the existing bond or to obtain an additional bond.

(c) Furnishing executed bonds. The Contractor shall furnish all executed bonds, including any necessary reinsurance agreements, to the Contracting Officer, within the time period specified in the Bid Guarantee provision of the solicitation, or otherwise specified by the Contracting Officer, but in any event, before starting work.

(d) Surety or other security for bonds. The bonds shall be in the form of firm commitment, supported by corporate sureties whose names appear on the list contained in Treasury Department Circular 570, individual sureties, or by other acceptable security such as postal money order, certified check, cashier's check, irrevocable letter of credit, or, in accordance with Treasury Department regulations, certain bonds or notes of the United States. Treasury Circular 570 is published in the Federal Register or may be obtained from the U.S. Department of Treasury, Financial Management Service, Surety Bond Branch, 401 14th Street, NW, 2nd Floor, West Wing, Washington, DC 20227.

(e) Notice of subcontractor waiver of protection (40 U.S.C. 270b(c). Any waiver of the right to sue on the payment bond is void unless it is in writing, signed by the person whose right is waived, and executed after such person has first furnished labor or material for use in the performance of the contract.

(End of clause)

52.229-3 FEDERAL, STATE, AND LOCAL TAXES (JAN 1991)

(a) "Contract date," as used in this clause, means the date set for bid opening or, if this is a negotiated contract or a modification, the effective date of this contract or modification.

"All applicable Federal, State, and local taxes and duties," as used in this clause, means all taxes and duties, in effect on the contract date, that the taxing authority is imposing and collecting on the transactions or property covered by this contract.

"After-imposed Federal tax," as used in this clause, means any new or increased Federal excise tax or duty, or tax that was exempted or excluded on the contract date but whose exemption was later revoked or reduced during the contract period, on the transactions or property covered by this contract that the Contractor is required to pay or bear as the result of legislative, judicial, or administrative action taking effect after the contract date. It does not include social security tax or other employment taxes.
"After-relieved Federal tax," as used in this clause, means any amount of Federal excise tax or duty, except social security or other employment taxes, that would otherwise have been payable on the transactions or property covered by this contract, but which the Contractor is not required to pay or bear, or for which the Contractor obtains a refund or drawback, as the result of legislative, judicial, or administrative action taking effect after the contract date.

(b) The contract price includes all applicable Federal, State, and local taxes and duties.

(c) The contract price shall be increased by the amount of any after-imposed Federal tax, provided the Contractor warrants in writing that no amount for such newly imposed Federal excise tax or duty or rate increase was included in the contract price, as a contingency reserve or otherwise.

(d) The contract price shall be decreased by the amount of any after-relieved Federal tax.

(e) The contract price shall be decreased by the amount of any Federal excise tax or duty, except social security or other employment taxes, that the Contractor is required to pay or bear, or does not obtain a refund of, through the Contractor's fault, negligence, or failure to follow instructions of the Contracting Officer.

(f) No adjustment shall be made in the contract price under this clause unless the amount of the adjustment exceeds $250.

(g) The Contractor shall promptly notify the Contracting Officer of all matters relating to any Federal excise tax or duty that reasonably may be expected to result in either an increase or decrease in the contract price and shall take appropriate action as the Contracting Officer directs.

(h) The Government shall, without liability, furnish evidence appropriate to establish exemption from any Federal, State, or local tax when the Contractor requests such evidence and a reasonable basis exists to sustain the exemption.

(End of clause)

52.232-5 PAYMENTS UNDER FIXED-PRICE CONSTRUCTION CONTRACTS (MAY 1997)

(a) Payment of price. The Government shall pay the Contractor the contract price as provided in this contract.

(b) Progress payments. The Government shall make progress payments monthly as the work proceeds, or at more frequent intervals as determined by the Contracting Officer, on estimates of work accomplished which meets the standards of quality established under the contract, as approved by the Contracting Officer.

(1) The Contractor's request for progress payments shall include the following substantiation:

(i) An itemization of the amounts requested, related to the various elements of work required by the contract covered by the payment requested.

(ii) A listing of the amount included for work performed by each subcontractor under the contract.

(iii) A listing of the total amount of each subcontract under the contract.

(iv) A listing of the amounts previously paid to each such subcontractor under the contract.

(v) Additional supporting data in a form and detail required by the Contracting Officer.

(2) In the preparation of estimates, the Contracting Officer may authorize material delivered on the site and preparatory work done to be taken into consideration. Material delivered to the Contractor at locations other than the site also may be taken into consideration if--

(i) Consideration is specifically authorized by this contract; and

(ii) The Contractor furnishes satisfactory evidence that it has acquired title to such material and that the material will be used to perform this contract.

(c) Contractor certification. Along with each request for progress payments, the Contractor shall furnish the following certification, or payment shall not be made: (However, if the Contractor elects to delete paragraph

(c)(4) from the certification, the certification is still acceptable.)

I hereby certify, to the best of my knowledge and belief, that--

(1) The amounts requested are only for performance in accordance with the specifications, terms, and conditions of the contract;

(2) Payments to subcontractors and suppliers have been made from previous payments received under the contract, and timely payments will be made from the proceeds of the payment covered by this certification, in accordance with subcontract agreements and the requirements of chapter 39 of Title 31, United States Code;

(3) This request for progress payments does not include any amounts which the prime contractor intends to withhold or retain from a subcontractor or supplier in accordance with the terms and conditions of the subcontract; and

(4) This certification is not to be construed as final acceptance of a subcontractor's performance.

_____

(Name)

_____

(Title)

_____

(Date)

(d) Refund of unearned amounts. If the Contractor, after making a certified request for progress payments, discovers that a portion or all of such request constitutes a payment for performance by the Contractor that fails to conform to the specifications, terms, and conditions of this contract (hereinafter referred to as the "unearned amount"), the Contractor shall--

(1) Notify the Contracting Officer of such performance deficiency; and

(2) Be obligated to pay the Government an amount (computed by the Contracting Officer in the manner provided in paragraph (j) of this clause) equal to interest on the unearned amount from the 8th day after the date of receipt of the unearned amount until--

(i) The date the Contractor notifies the Contracting Officer that the performance deficiency has been corrected; or

(ii) The date the Contractor reduces the amount of any subsequent certified request for progress payments by an amount equal to the unearned amount.

(e) Retainage. If the Contracting Officer finds that satisfactory progress was achieved during any period for which a progress payment is to be made, the Contracting Officer shall authorize payment to be made in full. However, if satisfactory progress has not been made, the Contracting Officer may retain a maximum of 10 percent of the amount of the payment until satisfactory progress is achieved. When the work is substantially complete, the Contracting Officer may retain from previously withheld funds and future progress payments that amount the Contracting Officer considers adequate for protection of the Government and shall release to the Contractor all the remaining withheld funds. Also, on completion and acceptance of each separate building, public work, or other division of the contract, for which the price is stated separately in the contract, payment shall be made for the

completed work without retention of a percentage.

(f) Title, liability, and reservation of rights. All material and work covered by progress payments made shall, at the time of payment, become the sole property of the Government, but this shall not be construed as--

(1) Relieving the Contractor from the sole responsibility for all material and work upon which payments have been made or the restoration of any damaged work; or

(2) Waiving the right of the Government to require the fulfillment of all of the terms of the contract.

(g) Reimbursement for bond premiums. In making these progress payments, the Government shall, upon request, reimburse the Contractor for the amount of premiums paid for performance and payment bonds (including coinsurance and reinsurance agreements, when applicable) after the Contractor has furnished evidence of full payment to the surety. The retainage provisions in paragraph (e) of this clause shall not apply to that portion of progress payments attributable to bond premiums.

(h) Final payment. The Government shall pay the amount due the Contractor under this contract after--

(1) Completion and acceptance of all work;

(2) Presentation of a properly executed voucher; and

(3) Presentation of release of all claims against
the Government arising by virtue of this contract, other than claims, in stated amounts, that the Contractor has specifically excepted from the operation of the release. A release may also be required of the assignee if the Contractor's claim to amounts payable under this contract has been assigned under the Assignment of Claims Act of 1940 (31 U.S.C. 3727 and 41 U.S.C. 15).

(i) Limitation because of undefinitized work. Notwithstanding any provision of this contract, progress payments shall not exceed 80 percent on work accomplished on undefinitized contract actions. A "contract action" is any action resulting in a contract, as defined in FAR Subpart 2.1, including contract modifications for additional supplies or services, but not including contract modifications that are within the scope and under the terms of the contract, such as contract modifications issued pursuant to the Changes clause, or funding and other administrative changes.

(j) Interest computation on unearned amounts. In accordance with 31 U.S.C. 3903(c)(1), the amount payable under subparagraph (d)(2) of this clause shall be--

(1) Computed at the rate of average bond equivalent rates of 91-day Treasury bills auctioned at the most recent auction of such bills prior to the date the Contractor receives the unearned amount; and

(2) Deducted from the next available payment to the Contractor.

(End of clause)

52.232-17 INTEREST (JUNE 1996)

(a) Except as otherwise provided in this contract under a Price Reduction for Defective Cost or Pricing Data clause or a Cost Accounting Standards clause, all amounts that become payable by the Contractor to the Government under this contract (net of any applicable tax credit under the Internal Revenue Code (26 U.S.C. 1481)) shall bear simple interest from the date due until paid unless paid within 30 days of becoming due. The interest rate shall be the interest rate established by the Secretary of the Treasury as provided in Section 12 of the

Contract Disputes Act of 1978 (Public Law 95-563), which is applicable to the period in which the amount becomes due, as provided in paragraph (b) of this clause, and then at the rate applicable for each six-month period as fixed by the Secretary until the amount is paid. reproduce, prepare derivative works, distribute copies to the public, and (b) Amounts shall be due at the earliest of the following dates:

(1) The date fixed under this contract.

(2) The date of the first written demand for payment consistent with this contract, including any demand resulting from a default termination.

(3) The date the Government transmits to the Contractor a proposed supplemental agreement to confirm completed negotiations establishing the amount of debt.

(4) If this contract provides for revision of prices, the date of written notice to the Contractor stating the amount of refund payable in connection with a pricing proposal or a negotiated pricing agreement not confirmed by contract modification.

(c) The interest charge made under this clause may be reduced under the procedures prescribed in 32.614-2 of the Federal Acquisition Regulation in effect on the date of this contract.

(End of clause)

52.232-23 ASSIGNMENT OF CLAIMS (JAN 1986)

(a) The Contractor, under the Assignment of Claims Act, as amended, 31 U.S.C. 3727, 41 U.S.C. 15 (hereafter referred to as "the Act"), may assign its rights to be paid amounts due or to become due as a result of the performance of this contract to a bank, trust company, or other financing institution, including any Federal lending agency. The assignee under such an assignment may thereafter further assign or reassign its right under the original assignment to any type of financing institution described in the preceding sentence.

(b) Any assignment or reassignment authorized under the Act and this clause shall cover all unpaid amounts payable under this contract, and shall not be made to more than one party, except that an assignment or reassignment may be made to one party as agent or trustee for two or more parties participating in the financing of this contract.

(c) The Contractor shall not furnish or disclose to any assignee under this contract any classified document (including this contract) or information related to work under this contract until the Contracting Officer authorizes such action in writing.

(End of clause)

52.232-33 PAYMENT BY ELECTRONIC FUNDS TRANSFER—CENTRAL CONTRACTOR REGISTRATION (MAY 1999)

(a) Method of payment. (1) All payments by the Government under this contract shall be made by electronic funds transfer (EFT), except as provided in paragraph (a)(2) of this clause. As used in this clause, the term “EFT” refers to the funds transfer and may also include the payment information transfer.

(2) In the event the Government is unable to release one or more payments by EFT, the Contractor agrees to either--

(i) Accept payment by check or some other mutually agreeable method of payment; or

(ii) Request the Government to extend the payment due date until such time as the Government can make payment by EFT (but see paragraph (d) of this clause).

(b) Contractor's EFT information. The Government shall make payment to the Contractor using the EFT information contained in the Central Contractor Registration (CCR) database. In the event that the EFT information changes, the Contractor shall be responsible for providing the updated information to the CCR database.

(c) Mechanisms for EFT payment. The Government may make payment by EFT through either the Automated Clearing House (ACH) network, subject to the rules of the National Automated Clearing House Association, or the Fedwire Transfer System. The rules governing Federal payments through the ACH are contained in 31 CFR part 210.

(d) Suspension of payment. If the Contractor's EFT information in the CCR database is incorrect, then the Government need not make payment to the Contractor under this contract until correct EFT information is entered into the CCR database; and any invoice or contract financing request shall be deemed not to be a proper invoice for the purpose of prompt payment under this contract. The prompt payment terms of the contract regarding notice of an improper invoice and delays in accrual of interest penalties apply.

(e) Contractor EFT arrangements. If the Contractor has identified multiple payment receiving points (i.e., more than one remittance address and/or EFT information set) in the CCR database, and the Contractor has not notified the Government of the payment receiving point applicable to this contract, the Government shall make payment to the first payment receiving point (EFT information set or remittance address as applicable) listed in the CCR database.

(f) Liability for uncompleted or erroneous transfers. (1) If an uncompleted or erroneous transfer occurs because the Government used the Contractor's EFT information incorrectly, the Government remains responsible for--

(i) Making a correct payment;

(ii) Paying any prompt payment penalty due; and

(iii) Recovering any erroneously directed funds.

(2) If an uncompleted or erroneous transfer occurs because the Contractor's EFT information was incorrect, or was revised within 30 days of Government release of the EFT payment transaction instruction to the Federal Reserve System, and--

(i) If the funds are no longer under the control of the payment office, the Government is deemed to have made payment and the Contractor is responsible for recovery of any erroneously directed funds; or

(ii) If the funds remain under the control of the payment office, the Government shall not make payment, and the provisions of paragraph (d) of this clause shall apply.

(g) EFT and prompt payment. A payment shall be deemed to have been made in a timely manner in accordance with the prompt payment terms of this contract if, in the EFT payment transaction instruction released to the Federal Reserve System, the date specified for settlement of the payment is on or before the prompt payment due date, provided the specified payment date is a valid date under the rules of the Federal Reserve System.

(h) EFT and assignment of claims. If the Contractor assigns the proceeds of this contract as provided for in the assignment of claims terms of this contract, the Contractor shall require as a condition of any such assignment, that the assignee shall register in the CCR database and shall be paid by EFT in accordance with the terms of this clause. In all respects, the requirements of this clause shall apply to the assignee as if it were the Contractor. EFT

information that shows the ultimate recipient of the transfer to be other than the Contractor, in the absence of a proper assignment of claims acceptable to the Government, is incorrect EFT information within the meaning of paragraph (d) of this clause.

(i) Liability for change of EFT information by financial agent. The Government is not liable for errors resulting from changes to EFT information made by the Contractor's financial agent.

(j) Payment information. The payment or disbursing office shall forward to the Contractor available payment information that is suitable for transmission as of the date of release of the EFT instruction to the Federal Reserve System. The Government may request the Contractor to designate a desired format and method(s) for delivery of payment information from a list of formats and methods the payment office is capable of executing. However, the Government does not guarantee that any particular format or method of delivery is available at any particular payment office and retains the latitude to use the format and delivery method most convenient to the Government. If the Government makes payment by check in accordance with paragraph (a) of this clause, the Government shall mail the payment information to the remittance address contained in the CCR database.

(End of Clause)

52.233-1 DISPUTES. (DEC 1998)

(a) This contract is subject to the Contract Disputes Act of 1978, as amended (41 U.S.C. 601-613).

(b) Except as provided in the Act, all disputes arising under or relating to this contract shall be resolved under this clause.

(c) "Claim," as used in this clause, means a written demand or written assertion by one of the contracting parties seeking, as a matter of right, the payment of money in a sum certain, the adjustment or interpretation of contract terms, or other relief arising under or relating to this contract. A claim arising under a contract, unlike a claim relating to that contract, is a claim that can be resolved under a contract clause that provides for the relief sought by the claimant. However, a written demand or written assertion by the Contractor seeking the payment of money exceeding $100,000 is not a claim under the Act until certified as required by subparagraph (d)(2) of this clause. A voucher, invoice, or other routine request for payment that is not in dispute when submitted is not a claim under the Act. The submission may be converted to a claim under the Act, by complying with the submission and certification requirements of this clause, if it is disputed either as to liability or amount or is not acted upon in a reasonable time.

(d)(1) A claim by the Contractor shall be made in writing and, unless otherwise stated in this contract, submitted within 6 years after accrual of the claim to the Contracting Officer for a written decision. A claim by the Government against the Contractor shall be subject to a written decision by the Contracting Officer.

(2)(i) The contractors shall provide the certification specified in subparagraph (d)(2)(iii) of this clause when submitting any claim -

(A) Exceeding $100,000; or

(B) Regardless of the amount claimed, when using -

(1) Arbitration conducted pursuant to 5 U.S.C. 575-580; or

(2) Any other alternative means of dispute resolution (ADR) technique that the agency elects to handle in accordance with the Administrative Dispute Resolution Act (ADRA).

(ii) The certification requirement does not apply to issues in controversy that have not been submitted as all or part of a claim.

(iii) The certification shall state as follows: "I certify that the claim is made in good faith; that the supporting data are accurate and complete to the best of my knowledge and belief; that the amount requested accurately reflects the contract adjustment for which the Contractor believes the Government is liable; and that I am duly authorized to certify the claim on behalf of the Contractor.

(3) The certification may be executed by any person duly authorized to bind the Contractor with respect to the claim.

(e) For Contractor claims of $100,000 or less, the Contracting Officer must, if requested in writing by the Contractor, render a decision within 60 days of the request. For Contractor-certified claims over $100,000, the Contracting Officer must, within 60 days, decide the claim or notify the Contractor of the date by which the decision will be made.

(f) The Contracting Officer's decision shall be final unless the Contractor appeals or files a suit as provided in the Act.

(g) If the claim by the Contractor is submitted to the Contracting Officer or a claim by the Government is presented to the Contractor, the parties, by mutual consent, may agree to use alternative disput resolution (ADR). If the Contractor refuses an offer for ADR, the Contractor shall inform the Contracting Officer, in writing, of the Contractor's specific reasons for rejecting the request.

(h) The Government shall pay interest on the amount found due and unpaid from (1) the date the Contracting Officer receives the claim (certified, if required); or (2) the date that payment otherwise would be due, if that date is later, until the date of payment. With regard to claims having defective certifications, as defined in (FAR) 48 CFR 33.201, interest shall be paid from the date that the Contracting Officer initially receives the claim. Simple interest on claims shall be paid at the rate, fixed by the Secretary of the Treasury as provided in the Act, which is applicable to the period during which the Contracting Officer receives the claim and then at the rate applicable for each 6-month period as fixed by the Treasury Secretary during the pendency of the claim.

(i) The Contractor shall proceed diligently with performance of this contract, pending final resolution of any request for relief, claim, appeal, or action arising under the contract, and comply with any decision of the Contracting Officer.

(End of clause)

52.236-1 PERFORMANCE OF WORK BY THE CONTRACTOR (APR 1984)

The Contractor shall perform on the site, and with its own organization, work equivalent to at least fifteen (15%) percent of the total amount of work to be performed under the contract. This percentage may be reduced by a supplemental agreement to this contract if, during performing the work, the Contractor requests a reduction and the Contracting Officer determines that the reduction would be to the advantage of the Government.

(End of clause)

52.236-2 DIFFERING SITE CONDITIONS (APR 1984)

As prescribed in 36.502, insert the following clause in solicitations and contracts when a fixed-price construction contract or a fixed-price dismantling, demolition, or removal of improvements contract is contemplated and the contract amount is expected to exceed the small purchase limitation. The Contracting Officer may insert the clause in solicitations and contracts when a fixed-price construction or a fixed-price contract for dismantling, demolition, or removal of improvements is contemplated and the contract amount is expected to be within the small purchase limitation.

(a) The Contractor shall promptly, and before the conditions are disturbed, give a written notice to the Contracting Officer of

(1) subsurface or latent physical conditions at the site which differ materially from those indicated in this contract, or

(2) unknown physical conditions at the site, of an unusual nature, which differ materially from those ordinarily encountered and generally recognized as inhering in work of the character provided for in the contract.

(b) The Contracting Officer shall investigate the site conditions promptly after receiving the notice. If the conditions do materially so differ and cause an increase or decrease in the Contractor's cost of, or the time required for, performing any part of the work under this contract, whether or not changed as a result of the conditions, an equitable adjustment shall be made under this clause and the contract modified in writing accordingly.

(c) No request by the Contractor for an equitable adjustment to the contract under this clause shall be allowed, unless the Contractor has given the written notice required; provided, that the time prescribed in (a) above for giving written notice may be extended by the Contracting Officer.

(d) No request by the Contractor for an equitable adjustment to the contract for differing site conditions shall be allowed if made after final payment under this contract.

(End of clause)

52.236-3 SITE INVESTIGATION AND CONDITIONS AFFECTING THE WORK (APR 1984)

(a) The Contractor acknowledges that it has taken steps reasonably necessary to ascertain the nature and location of the work, and that it has investigated and satisfied itself as to the general and local conditions which can affect the work or its cost, including but not limited to

(1) conditions bearing upon transportation, disposal, handling, and storage of materials;

(2) the availability of labor, water, electric power, and roads;

(3) uncertainties of weather, river stages, tides, or similar physical conditions at the site;

(4) the conformation and conditions of the ground; and (5) the character of equipment and facilities needed preliminary to and during work performance. The Contractor also acknowledges that it has satisfied itself as to the character, quality, and quantity of surface and subsurface materials or obstacles to be encountered insofar as this information is reasonably ascertainable from an inspection of the site, including all exploratory work done by the Government, as well as from the drawings and specifications made a part of this contract. Any failure of the Contractor to take the actions described and acknowledged in this paragraph will not relieve the Contractor from responsibility for estimating properly the difficulty and cost of successfully performing the work, or for proceeding to successfully perform the work without additional expense to the Government.

(b) The Government assumes no responsibility for any conclusions or interpretations made by the Contractor based on the information made available by the Government. Nor does the Government assume responsibility for any understanding reached or representation made concerning conditions which can affect the work by any of its officers or agents before the execution of this contract, unless that understanding or representation is expressly stated in this contract.

(End of clause)

52.236-5 MATERIAL AND WORKMANSHIP (APR 1984)

(a) All equipment, material, and articles incorporated into the work covered by this contract shall be new and of the most suitable grade for the purpose intended, unless otherwise specifically provided in this contract. References in the specifications to equipment, material, articles, or patented processes by trade name, make, or catalog number, shall be regarded as establishing a standard of quality and shall not be construed as limiting competition. The Contractor may, at its option, use any equipment, material, article, or process that, in the judgment of the Contracting Officer, is equal to that named in the specifications, unless otherwise specifically provided in this contract.

(b) The Contractor shall obtain the Contracting Officer's approval of the machinery and mechanical and other equipment to be incorporated into the work. When requesting approval, the Contractor shall furnish to the Contracting Officer the name of the manufacturer, the model number, and other information concerning the performance, capacity, nature, and rating of the machinery and mechanical and other equipment. When required by this contract or by the Contracting Officer, the Contractor shall also obtain the Contracting Officer's approval of the material or articles which the Contractor contemplates incorporating into the work. When requesting approval, the Contractor shall provide full information concerning the material or articles. When directed to do so, the Contractor shall submit samples for approval at the Contractor's expense, with all shipping charges prepaid. Machinery, equipment, material, and articles that do not have the required approval shall be installed or used at the risk of subsequent rejection.

(c) All work under this contract shall be performed in a skillful and workmanlike manner. The Contracting Officer may require, in writing, that the Contractor remove from the work any employee the Contracting Officer deems incompetent, careless, or otherwise objectionable.

(End of clause)

52.236-6 SUPERINTENDENCE BY THE CONTRACTOR (APR 1984)

At all times during performance of this contract and until the work is completed and accepted, the Contractor shall directly superintend the work or assign and have on the worksite a competent superintendent who is satisfactory to the Contracting Officer and has authority to act for the Contractor.

(End of clause)

52.236-7 PERMITS AND RESPONSIBILITIES (NOV 1991)

The Contractor shall, without additional expense to the Government, be responsible for obtaining any necessary licenses and permits, and for complying with any Federal, State, and municipal laws, codes, and regulations applicable to the performance of the work. The Contractor shall also be responsible for all damages to persons or property that occur as a result of the Contractor's fault or negligence. The Contractor shall also be responsible for all materials delivered and work performed until completion and acceptance of the entire work, except for any

completed unit of work which may have been accepted under the contract.

(End of clause)

52.236-8 OTHER CONTRACTS (APR 1984)

The Government may undertake or award other contracts for additional work at or near the site of the work under this contract. The Contractor shall fully cooperate with the other contractors and with Government employees and shall carefully adapt scheduling and performing the work under this contract to accommodate the additional work, heeding any direction that may be provided by the Contracting Officer. The Contractor shall not commit or permit any act that will interfere with the performance of work by any other contractor or by Government employees.

(End of clause)

52.236-9 PROTECTION OF EXISTING VEGETATION, STRUCTURES, EQUIPMENT, UTILITIES, AND IMPROVEMENTS (APR 1984)

(a) The Contractor shall preserve and protect all structures, equipment, and vegetation (such as trees, shrubs, and grass) on or adjacent to the work site, which are not to be removed and which do not unreasonably interfere with the work required under this contract. The Contractor shall only remove trees when specifically authorized to do so, and shall avoid damaging vegetation that will remain in place. If any limbs or branches of trees are broken during contract performance, or by the careless operation of equipment, or by workmen, the Contractor shall trim those limbs or branches with a clean cut and paint the cut with a tree-pruning compound as directed by the Contracting Officer.

(b) The Contractor shall protect from damage all existing improvements and utilities

(1) at or near the work site, and

(2) on adjacent property of a third party, the locations of which are made known to or should be known by the Contractor. The Contractor shall repair any damage to those facilities, including those that are the property of a third party, resulting from failure to comply with the requirements of this contract or failure to exercise reasonable care in performing the work. If the Contractor fails or refuses to repair the damage promptly, the Contracting Officer may have the necessary work performed and charge the cost to the Contractor.

(End of clause)

52.236-10 OPERATIONS AND STORAGE AREAS (APR 1984)

(a) The Contractor shall confine all operations (including storage of materials) on Government premises to areas authorized or approved by the Contracting Officer. The Contractor shall hold and save the Government, its officers and agents, free and harmless from liability of any nature occasioned by the Contractor's performance.

(b) Temporary buildings (e.g., storage sheds, shops, offices) and utilities may be erected by the Contractor only with the approval of the Contracting Officer and shall be built with labor and materials furnished by the Contractor without expense to the Government. The temporary buildings and utilities shall remain the property of the Contractor and shall be removed by the Contractor at its expense upon completion of the work. With the written consent of the Contracting Officer, the buildings and utilities may be abandoned and need not be removed.

(c) The Contractor shall, under regulations prescribed by the Contracting Officer, use only established roadways,

or use temporary roadways constructed by the Contractor when and as authorized by the Contracting Officer. When materials are transported in prosecuting the work, vehicles shall not be loaded beyond the loading capacity recommended by the manufacturer of the vehicle or prescribed by any Federal, State, or local law or regulation. When it is necessary to cross curbs or sidewalks, the Contractor shall protect them from damage. The Contractor shall repair or pay for the repair of any damaged curbs, sidewalks, or roads.

(End of clause)

52.236-11 USE AND POSSESSION PRIOR TO COMPLETION (APR 1984)

(a) The Government shall have the right to take possession of or use any completed or partially completed part of the work. Before taking possession of or using any work, the Contracting Officer shall furnish the Contractor a list of items of work remaining to be performed or corrected on those portions of the work that the Government intends to take possession of or use. However, failure of the Contracting Officer to list any item of work shall not relieve the Contractor of responsibility for complying with the terms of the contract. The Government's possession or use shall not be deemed an acceptance of any work under the contract.

(b) While the Government has such possession or use, the Contractor shall be relieved of the responsibility for the loss of or damage to the work resulting from the Government's possession or use, notwithstanding the terms of the clause in this contract entitled "Permits and Responsibilities." If prior possession or use by the Government delays the progress of the work or causes additional expense to the Contractor, an equitable adjustment shall be made in the contract price or the time of completion, and the contract shall be modified in writing accordingly.

(End of clause)

52.236-12 CLEANING UP (APR 1984)

The Contractor shall at all times keep the work area, including storage areas, free from accumulations of waste materials. Before completing the work, the Contractor shall remove from the work and premises any rubbish, tools, scaffolding, equipment, and materials that are not the property of the Government. Upon completing the work, the Contractor shall leave the work area in a clean, neat, and orderly condition satisfactory to the Contracting Officer.

(End of clause)

52.236-14 AVAILABILITY AND USE OF UTILITY SERVICES (APR 1984)

(a) The Government shall make all reasonably required amounts of utilities available to the Contractor from existing outlets and supplies, as specified in the contract. Unless otherwise provided in the contract, the amount of each utility service consumed shall be charged to or paid for by the Contractor at prevailing rates charged to the Government or, where the utility is produced by the Government, at reasonable rates determined by the Contracting Officer. The Contractor shall carefully conserve any utilities furnished without charge.

(b) The Contractor, at its expense and in a workmanlike manner satisfactory to the Contracting Officer, shall install and maintain all necessary temporary connections and distribution lines, and all meters required to measure the amount of each utility used for the purpose of determining charges. Before final acceptance of the work by the Government, the Contractor shall remove all the temporary connections, distribution lines, meters, and associated paraphernalia.

(End of clause)

52.236-17 LAYOUT OF WORK (APR 1984)

The Contractor shall lay out its work from Government established base lines and bench marks indicated on the drawings, and shall be responsible for all measurements in connection with the layout. The Contractor shall furnish, at its own expense, all stakes, templates, platforms, equipment, tools, materials, and labor required to lay out any part of the work. The Contractor shall be responsible for executing the work to the lines and grades that may be established or indicated by the Contracting Officer. The Contractor shall also be responsible for maintaining and preserving all stakes and other marks established by the Contracting Officer until authorized to remove them. If such marks are destroyed by the Contractor or through its negligence before their removal is authorized, the Contracting Officer may replace them and deduct the expense of the replacement from any amounts due or to become due to the Contractor.

(End of clause)

52.236-21 SPECIFICATIONS AND DRAWINGS FOR CONSTRUCTION (FEB 1997)

(a) The Contractor shall keep on the work site a copy of the drawings and specifications and shall at all times give the Contracting Officer access thereto. Anything mentioned in the specifications and not shown on the drawings, or shown on the drawings and not mentioned in the specifications, shall be of like effect as if shown or mentioned in both. In case of difference between drawings and specifications, the specifications shall govern. In case of discrepancy in the figures, in the drawings, or in the specifications, the matter shall be promptly submitted to the Contracting Officer, who shall promptly make a determination in writing. Any adjustment by the Contractor without such a determination shall be at its own risk and expense. The Contracting Officer shall furnish from time to time such detailed drawings and other information as considered necessary, unless otherwise provided.

(b) Wherever in the specifications or upon the drawings the words "directed", "required", "ordered", "designated", "prescribed", or words of like import are used, it shall be understood that the "direction", "requirement", "order", "designation", or "prescription", of the Contracting Officer is intended and similarly the words "approved", "acceptable", "satisfactory", or words of like import shall mean "approved by," or "acceptable to", or "satisfactory to" the Contracting Officer, unless otherwise expressly stated.

(c) Where "as shown," as indicated", "as detailed", or words of similar import are used, it shall be understood that the reference is made to the drawings accompanying this contract unless stated otherwise. The word "provided" as used herein shall be understood to mean "provide complete in place," that is "furnished and installed".

(d) Shop drawings means drawings, submitted to the Government by the Contractor, subcontractor, or any lower tier subcontractor pursuant to a construction contract, showing in detail (1) the proposed fabrication and assembly of structural elements, and (2) the installation (i.e., fit, and attachment details) of materials or equipment. It includes drawings, diagrams, layouts, schematics, descriptive literature, illustrations, schedules, performance and test data, and similar materials furnished by the contractor to explain in detail specific portions of the work required by the contract. The Government may duplicate, use, and disclose in any manner and for any purpose shop drawings delivered under this contract.

(e) If this contract requires shop drawings, the Contractor shall coordinate all such drawings, and review them for accuracy, completeness, and compliance with contract requirements and shall indicate its approval thereon as evidence of such coordination and review. Shop drawings submitted to the Contracting Officer without evidence of the Contractor's approval may be returned for resubmission. The Contracting Officer will indicate an approval or disapproval of the shop drawings and if not approved as submitted shall indicate the Government's reasons therefor. Any work done before such approval shall be at the Contractor's risk. Approval by the Contracting Officer shall not relieve the Contractor from responsibility for any errors or omissions in such drawings, nor from responsibility

for complying with the requirements of this contract, except with respect to variations described and approved in accordance with (f) below.

(f) If shop drawings show variations from the contract requirements, the Contractor shall describe such variations in writing, separate from the drawings, at the time of submission. If the Contracting Officer approves any such variation, the Contracting Officer shall issue an appropriate contract modification, except that, if the variation is minor or does not involve a change in price or in time of performance, a modification need not be issued.

(g) The Contractor shall submit to the Contracting Officer for approval four copies (unless otherwise indicated) of all shop drawings as called for under the various headings of these specifications. Three sets (unless otherwise indicated) of all shop drawings, will be retained by the Contracting Officer and one set will be returned to the Contractor.

(End of clause)

52.236-26 PRECONSTRUCTION CONFERENCE (FEB 1995)

If the Contracting Officer decides to conduct a preconstruction conference, the successful offeror will be notified and will be required to attend. The Contracting Officer's notification will include specific details regarding the date, time, and location of the conference, any need for attendance by subcontractors, and information regarding the items to be discussed.

(End of clause)

52.242-13 BANKRUPTCY (JUL 1995)

In the event the Contractor enters into proceedings relating to bankruptcy, whether voluntary or involuntary, the Contractor agrees to furnish, by certified mail or electronic commerce method authorized by the contract, written notification of the bankruptcy to the Contracting Officer responsible for administering the contract. This notification shall be furnished within five days of the initiation of the proceedings relating to bankruptcy filing. This notification shall include the date on which the bankruptcy petition was filed, the identity of the court in which the bankruptcy petition was filed, and a listing of Government contract numbers and contracting offices for all Government contracts against which final payment has not been made. This obligation remains in effect until final payment under this contract.

(End of clause)

52.242-14 SUSPENSION OF WORK (APR 1984)

(a) The Contracting Officer may order the Contractor, in writing, to suspend, delay, or interrupt all or any part of the work of this contract for the period of time that the Contracting Officer determines appropriate for the convenience of the Government.

(b) If the performance of all or any part of the work is, for an unreasonable period of time, suspended, delayed, or interrupted (1) by an act of the Contracting Officer in the administration of this contract, or (2) by the Contracting Officer's failure to act within the time specified in this contract (or within a reasonable time if not specified), an adjustment shall be made for any increase in the cost of performance of this contract (excluding profit) necessarily caused by the unreasonable suspension, delay, or interruption, and the contract modified in writing

accordingly. However, no adjustment shall be made under this clause for any suspension, delay, or interruption to the extent that performance would have been so suspended, delayed, or interrupted by any other cause, including the fault or negligence of the Contractor, or for which an equitable adjustment is provided for or excluded under any other term or condition of this contract. (c) A claim under this clause shall not be allowed (1) for any costs incurred more than 20 days before the Contractor shall have notified the Contracting Officer in writing of the act or failure to act involved (but this requirement shall not apply as to a claim resulting from a suspension order), and (2) unless the claim, in an amount stated, is asserted in writing as soon as practicable after the termination of the suspension, delay, or interruption, but not later than the date of final payment under the contract.

(End of clause)

52.243-4 CHANGES (AUG 1987)

(a) The Contracting Officer may, at any time, without notice to the sureties, if any, by written order designated or indicated to be a change order, make changes in the work within the general scope of the contract, including changes--

(1) In the specifications (including drawings and designs);

(2) In the method or manner of performance of the work;

(3) In the Government-furnished facilities, equipment, materials, services, or site; or

(4) Directing acceleration in the performance of the work.

(b) Any other written or oral order (which, as used in this paragraph (b), includes direction, instruction, interpretation, or determination) from the Contracting Officer that causes a change shall be treated as a change order under this clause; provided, that the Contractor gives the Contracting Officer written notice stating

(1) the date, circumstances, and source of the order and

(2) that the Contractor regards the order as a change order.

(c) Except as provided in this clause, no order, statement, or conduct of the Contracting Officer shall be treated as a change under this clause or entitle the Contractor to an equitable adjustment.

(d) If any change under this clause causes an increase or decrease in the Contractor's cost of, or the time required for, the performance of any part of the work under this contract, whether or not changed by any such order, the Contracting Officer shall make an equitable adjustment and modify the contract in writing. However, except for an adjustment based on defective specifications, no adjustment for any change under paragraph (b) of this clause shall be made for any costs incurred more than 20 days before the Contractor gives written notice as required. In the case of defective specifications for which the Government is responsible, the equitable adjustment shall include any increased cost reasonably incurred by the Contractor in attempting to comply with the defective specifications.

(e) The Contractor must assert its right to an adjustment under this clause within 30 days after

(1) receipt of a written change order under paragraph (a) of this clause or (2) the furnishing of a written notice under paragraph (b) of this clause, by submitting to the Contracting Officer a written statement describing the general nature and amount of the proposal, unless this period is extended by the Government. The statement of proposal for adjustment may be included in the notice under paragraph (b) above.

(f) No proposal by the Contractor for an equitable adjustment shall be allowed if asserted after final payment under this contract.

(End of clause)

52.245-2 GOVERNMENT PROPERTY (FIXED-PRICE CONTRACTS) (DEC 1989)

(a) Government-furnished property. (1) The Government shall deliver to the Contractor, for use in connection with and under the terms of this contract, the Government-furnished property described in the Schedule or specifications together with any related data and information that the Contractor may request and is reasonably required for the intended use of the property (hereinafter referred to as "Government-furnished property").

(2) The delivery or performance dates for this contract are based upon the expectation that Government-furnished property suitable for use (except for property furnished "as is") will be delivered to the Contractor at the times stated in the Schedule or, if not so stated, in sufficient time to enable the Contractor to meet the contract's delivery or performance dates.

(3) If Government-furnished property is received by the Contractor in a condition not suitable for the intended use, the Contractor shall, upon receipt of it, notify the Contracting Officer, detailing the facts, and, as directed by the Contracting Officer and at Government expense, either repair, modify, return, or otherwise dispose of the property. After completing the directed action and upon written request of the Contractor, the Contracting Officer shall make an equitable adjustment as provided in paragraph (h) of this clause.

(4) If Government-furnished property is not delivered to the Contractor by the required time, the Contracting Officer shall, upon the Contractor's timely written request, make a determination of the delay, if any, caused the Contractor and shall make an equitable adjustment in accordance with paragraph (h) of this clause.

(b) Changes in Government-furnished property. (1) The Contracting Officer may, by written notice, (i) decrease the Government-furnished property provided or to be provided under this contract, or (ii) substitute other Government-furnished property for the property to be provided by the Government, or to be acquired by the Contractor for the Government, under this contract. The Contractor shall promptly take such action as the Contracting Officer may direct regarding the removal, shipment, or disposal of the property covered by such notice.

(2) Upon the Contractor's written request, the Contracting Officer shall make an equitable adjustment to the contract in accordance with paragraph (h) of this clause, if the Government has agreed in the Schedule to make the property available for performing this contract and there is any--

(i) Decrease or substitution in this property pursuant to subparagraph (b)(1) of this clause; or

(ii) Withdrawal of authority to use this property, if provided under any other contract or lease.

(c) Title in Government property. (1) The Government shall retain title to all Government-furnished property.

(2) All Government-furnished property and all property acquired by the Contractor, title to which vests in the Government under this paragraph (collectively referred to as "Government property"), are subject to the provisions of this clause. However, special tooling accountable to this contract is subject to the provisions of the Special Tooling clause and is not subject to the provisions of this clause. Title to Government property shall not be affected by its incorporation into or attachment to any property not owned by the Government, nor shall Government property become a fixture or lose its identity as personal property by being attached to any real property.

(3) Title to each item of facilities and special test equipment acquired by the Contractor for the Government under this contract shall pass to and vest in the Government when its use in performing this contract commences or when the Government has paid for it, whichever is earlier, whether or not title previously vested in the Government.

(4) If this contract contains a provision directing the Contractor to purchase material for which the Government will reimburse the Contractor as a direct item of cost under this contract--

(i) Title to material purchased from a vendor shall pass to and vest in the Government upon the vendor's delivery of such material; and

(ii) Title to all other material shall pass to and vest in the Government upon--

(A) Issuance of the material for use in contract performance;

(B) Commencement of processing of the material or its use in contract performance; or

(C) Reimbursement of the cost of the material by the Government, whichever occurs first.

(d) Use of Government property. The Government property shall be used only for performing this contract, unless otherwise provided in this contract or approved by the Contracting Officer.

(e) Property administration. (1) The Contractor shall be responsible and accountable for all Government property provided under this contract and shall comply with Federal Acquisition Regulation (FAR) Subpart 45.5, as in effect on the date of this contract.

(2) The Contractor shall establish and maintain a program for the use, maintenance, repair, protection, and preservation of Government property in accordance with sound industrial practice and the applicable provisions of Subpart 45.5 of the FAR.

(3) If damage occurs to Government property, the risk of which has been assumed by the Government under this contract, the Government shall replace the items or the Contractor shall make such repairs as the Government directs. However, if the Contractor cannot effect such repairs within the time required, the Contractor shall dispose of the property as directed by the Contracting Officer. When any property for which the Government is responsible is replaced or repaired, the Contracting Officer shall make an equitable adjustment in accordance with paragraph (h) of this clause.

(4) The Contractor represents that the contract price does not include any amount for repairs or replacement for which the Government is responsible. Repair or replacement of property for which the Contractor is responsible shall be accomplished by the Contractor at its own expense.

(f) Access. The Government and all its designees shall have access at all reasonable times to the premises in which any Government property is located for the purpose of inspecting the Government property.

(g) Risk of loss. Unless otherwise provided in this contract, the Contractor assumes the risk of, and shall be responsible for, any loss or destruction of, or damage to, Government property upon its delivery to the Contractor or upon passage of title to the Government under paragraph (c) of this clause. However, the Contractor is not responsible for reasonable wear and tear to Government property or for Government property properly consumed in performing this contract.

(h) Equitable adjustment. When this clause specifies an equitable adjustment, it shall be made to any affected contract provision in accordance with the procedures of the Changes clause. When appropriate, the Contracting Officer may initiate an equitable adjustment in favor of the Government. The right to an equitable adjustment shall be the Contractor's exclusive remedy. The Government shall not be liable to suit for breach of contract for--

(1) Any delay in delivery of Government-furnished property;

(2) Delivery of Government-furnished property in a condition not suitable for its intended use;

(3) A decrease in or substitution of Government-furnished property; or

(4) Failure to repair or replace Government property for which the Government is responsible.

(i) Final accounting and disposition of Government property. Upon completing this contract, or at such earlier dates as may be fixed by the Contracting Officer, the Contractor shall submit, in a form acceptable to the Contracting Officer, inventory schedules covering all items of Government property (including any resulting scrap) not consumed in performing this contract or delivered to the Government. The Contractor shall prepare for shipment, deliver f.o.b. origin, or dispose of the Government property as may be directed or authorized by the Contracting Officer. The net proceeds of any such disposal shall be credited to the contract price or shall be paid to the Government as the Contracting Officer directs.

(j) Abandonment and restoration of Contractor's premises. Unless otherwise provided herein, the Government--

(1) May abandon any Government property in place, at which time all obligations of the Government regarding such abandoned property shall cease; and

(2) Has no obligation to restore or rehabilitate the Contractor's premises under any circumstances (e.g., abandonment, disposition upon completion of need, or upon contract completion). However, if the Government-furnished property (listed in the Schedule or specifications) is withdrawn or is unsuitable for the intended use, or if other Government property is substituted, then the equitable adjustment under paragraph (h) of this clause may properly include restoration or rehabilitation costs.

(k) Communications. All communications under this clause shall be in writing.

(l) Overseas contracts. If this contract is to be performed outside of the United States of America, its territories, or possessions, the words "Government" and "Government-furnished" (wherever they appear in this clause) shall be construed as "United States Government" and "United States Government-furnished," respectively.

(End of clause)

52.246-12 INSPECTION OF CONSTRUCTION (AUG 1996)

(a) Definition. "Work" includes, but is not limited to, materials, workmanship, and manufacture and fabrication of components.

(b) The Contractor shall maintain an adequate inspection system and perform such inspections as will ensure that the work performed under the contract conforms to contract requirements. The Contractor shall maintain complete inspection records and make them available to the Government. All work shall be conducted under the general direction of the Contracting Officer and is subject to Government inspection and test at all places and at all reasonable times before acceptance to ensure strict compliance with the terms of the contract.

(c) Government inspections and tests are for the sole benefit of the Government and do not--

(1) Relieve the Contractor of responsibility for providing adequate quality control measures;

(2) Relieve the Contractor of responsibility for damage to or loss of the material before acceptance;

(3) Constitute or imply acceptance; or

(4) Affect the continuing rights of the Government after acceptance of the completed work under paragraph (i) of this section.

(d) The presence or absence of a Government inspector does not relieve the Contractor from any contract requirement, nor is the inspector authorized to change any term or condition of the specification without the Contracting Officer's written authorization.

(e) The Contractor shall promptly furnish, at no increase in contract price, all facilities, labor, and material reasonably needed for performing such safe and convenient inspections and tests as may be required by the Contracting Officer. The Government may charge to the Contractor any additional cost of inspection or test when work is not ready at the time specified by the Contractor for inspection or test, or when prior rejection makes reinspection or retest necessary. The Government shall perform all inspections and tests in a manner that will not unnecessarily delay the work. Special, full size, and performance tests shall be performed as described in the contract.

(f) The Contractor shall, without charge, replace or correct work found by the Government not to conform to contract requirements, unless in the public interest the Government consents to accept the work with an appropriate adjustment in contract price. The Contractor shall promptly segregate and remove rejected material from the premises.

(g) If the Contractor does not promptly replace or correct rejected work, the Government may (1) by contract or otherwise, replace or correct the work and charge the cost to the Contractor or (2) terminate for default the Contractor's right to proceed.

(h) If, before acceptance of the entire work, the Government decides to examine already completed work by removing it or tearing it out, the Contractor, on request, shall promptly furnish all necessary facilities, labor, and material. If the work is found to be defective or nonconforming in any material respect due to the fault of the Contractor or its subcontractors, the Contractor shall defray the expenses of the examination and of satisfactory reconstruction. However, if the work is found to meet contract requirements, the Contracting Officer shall make an equitable adjustment for the additional services involved in the examination and reconstruction, including, if completion of the work was thereby delayed, an extension of time.

(i) Unless otherwise specified in the contract, the Government shall accept, as promptly as practicable after completion and inspection, all work required by the contract or that portion of the work the Contracting Officer determines can be accepted separately. Acceptance shall be final and conclusive except for latent defects, fraud, gross mistakes amounting to fraud, or the Government's rights under any warranty or guarantee.

(End of clause)

52.246-21 WARRANTY OF CONSTRUCTION (MAR 1994)

(a) In addition to any other warranties in this contract, the Contractor warrants, except as provided in paragraph (i) of this clause, that work performed under this contract conforms to the contract requirements and is free of any defect in equipment, material, or design furnished, or workmanship performed by the Contractor or any subcontractor or supplier at any tier.

(b) This warranty shall continue for a period of 1 year from the date of final acceptance of the work. If the Government takes possession of any part of the work before final acceptance, this warranty shall continue for a period of 1 year from the date the Government takes possession.

(c) The Contractor shall remedy at the Contractor's expense any failure to conform, or any defect. In addition, the Contractor shall remedy at the Contractor's expense any damage to Government-owned or controlled real or personal property, when that damage is the result of--

(1) The Contractor's failure to conform to contract requirements; or

(2) Any defect of equipment, material, workmanship, or design furnished.

(d) The Contractor shall restore any work damaged in fulfilling the terms and conditions of this clause. The Contractor's warranty with respect to work repaired or replaced will run for 1 year from the date of repair or replacement.

(e) The Contracting Officer shall notify the Contractor, in writing, within a reasonable time after the discovery of any failure, defect, or damage.

(f) If the Contractor fails to remedy any failure, defect, or damage within a reasonable time after receipt of notice, the Government shall have the right to replace, repair, or otherwise remedy the failure, defect, or damage at the Contractor's expense.
(g) With respect to all warranties, express or implied, from subcontractors, manufacturers, or suppliers for work performed and materials furnished under this contract, the Contractor shall--

(1) Obtain all warranties that would be given in normal commercial practice;

(2) Require all warranties to be executed, in writing, for the benefit of the Government, if directed by the Contracting Officer; and

(3) Enforce all warranties for the benefit of the Government, if directed by the Contracting Officer.

(h) In the event the Contractor's warranty under paragraph (b) of this clause has expired, the Government may bring suit at its expense to enforce a subcontractor's, manufacturer's, or supplier's warranty.

(i) Unless a defect is caused by the negligence of the Contractor or subcontractor or supplier at any tier, the Contractor shall not be liable for the repair of any defects of material or design furnished by the Government nor for the repair of any damage that results from any defect in Government-furnished material or design.

(j) This warranty shall not limit the Government's rights under the Inspection and Acceptance clause of this contract with respect to latent defects, gross mistakes, or fraud.

(End of clause)

52.248-3 VALUE ENGINEERING--CONSTRUCTION (FEB 2000) - ALTERNATE I (APR 1984)

(a) General. The Contractor is encouraged to develop, prepare, and submit value engineering change proposals (VECP's) voluntarily. The Contractor shall share in any instant contract savings realized from accepted VECP's, in accordance with paragraph (f) below.

(b) Definitions. "Collateral costs," as used in this clause, means agency costs of operation, maintenance, logistic support, or Government-furnished property.

"Collateral savings," as used in this clause, means those measurable net reductions resulting from a VECP in the agency's overall projected collateral costs, exclusive of acquisition savings, whether or not the acquisition cost changes.

"Contractor's development and implementation costs," as used in this clause, means those costs the Contractor incurs on a VECP specifically in developing, testing, preparing, and submitting the VECP, as well as those costs the Contractor incurs to make the contractual changes required by Government acceptance of a VECP.

"Government costs," as used in this clause, means those agency costs that result directly from developing and implementing the VECP, such as any net increases in the cost of testing, operations, maintenance, and logistic support. The term does not include the normal administrative costs of processing the VECP.

"Instant contract savings," as used in this clause, means the estimated reduction in Contractor cost of performance resulting from acceptance of the VECP, minus allowable Contractor's development and implementation costs, including subcontractors' development and implementation costs (see paragraph (h) below).

"Value engineering change proposal (VECP)" means a proposal that--

(1) Requires a change to this, the instant contract, to implement; and

(2) Results in reducing the contract price or estimated cost without impairing essential functions or characteristics; provided, that it does not involve a change--

(i) In deliverable end item quantities only; or

(ii) To the contract type only.

(c) VECP preparation. As a minimum, the Contractor shall include in each VECP the information described in subparagraphs (1) through (7) below. If the proposed change is affected by contractually required configuration management or similar procedures, the instructions in those procedures relating to format, identification, and priority assignment shall govern VECP preparation. The VECP shall include the following:

(1) A description of the difference between the existing contract requirement and that proposed, the comparative advantages and disadvantages of each, a justification when an item's function or characteristics are being altered, and the effect of the change on the end item's performance.

(2) A list and analysis of the contract requirements that must be changed if the VECP is accepted, including any suggested specification revisions.

(3) A separate, detailed cost estimate for (i) the affected portions of the existing contract requirement and (ii) the VECP. The cost reduction associated with the VECP shall take into account the Contractor's allowable development and implementation costs, including any amount attributable to subcontracts under paragraph (h) below.

(4) A description and estimate of costs the Government may incur in implementing the VECP, such as test and evaluation and operating and support costs.

(5) A prediction of any effects the proposed change would have on collateral costs to the agency.

(6) A statement of the time by which a contract modification accepting the VECP must be issued in order to achieve the maximum cost reduction, noting any effect on the contract completion time or delivery schedule.

(7) Identification of any previous submissions of the VECP, including the dates submitted, the agencies and contract numbers involved, and previous Government actions, if known.

(d) Submission. The Contractor shall submit VECP's to the Resident Engineer at the worksite, with a copy to the Contracting Officer.

(e) Government action. (1) The Contracting Officer shall notify the Contractor of the status of the VECP within 45 calendar days after the contracting office receives it. If additional time is required, the Contracting Officer shall notify the Contractor within the 45-day period and provide the reason for the delay and the expected date of the decision. The Government will process VECP's expeditiously; however, it shall not be liable for any delay in acting upon a VECP.

(2) If the VECP is not accepted, the Contracting Officer shall notify the Contractor in writing, explaining the reasons for rejection. The Contractor may withdraw any VECP, in whole or in part, at any time before it is accepted by the Government. The Contracting Officer may require that the Contractor provide written notification before undertaking significant expenditures for VECP effort.

(3) Any VECP may be accepted, in whole or in part, by the Contracting Officer's award of a modification to this contract citing this clause. The Contracting Officer may accept the VECP, even though an agreement on price reduction has not been reached, by issuing the Contractor a notice to proceed with the change. Until a notice to proceed is issued or a contract modification applies a VECP to this contract, the Contractor shall perform in accordance with the existing contract. The decision to accept or reject all or part of any VECP is a unilateral decision made solely at the discretion of the Contracting Officer.

(f) Sharing.

(1) Rates. The Government's share of savings is determined by subtracting Government costs from instant contract savings and multiplying the result by (i) 45 percent for fixed-price contracts or (ii) 75 percent for cost-reimbursement contracts.

(2) Payment. Payment of any share due the Contractor for use of a VECP on this contract shall be authorized by a modification to this contract to--

(i) Accept the VECP;

(ii) Reduce the contract price or estimated cost by the amount of instant contract savings; and

(iii) Provide the Contractor's share of savings by adding the amount calculated to the contract price or fee.

(g) Subcontracts. The Contractor shall include an appropriate value engineering clause in any subcontract of $50,000 or more and may include one in subcontracts of lesser value. In computing any adjustment in this contract's price under paragraph (f) above, the Contractor's allowable development and implementation costs shall include any subcontractor's allowable development and implementation costs clearly resulting from a VECP accepted by the Government under this contract, but shall exclude any value engineering incentive payments to a subcontractor. The Contractor may choose any arrangement for subcontractor value engineering incentive payments; provided, that these payments shall not reduce the Government's share of the savings resulting from the VECP.

(h) Data. The Contractor may restrict the Government's right to use any part of a VECP or the supporting data by marking the following legend on the affected parts:

"These data, furnished under the Value Engineering--Construction clause of contract . . . . . , shall not be disclosed outside the Government or duplicated, used, or disclosed, in whole or in part, for any purpose other than to evaluate a value engineering change proposal submitted under the clause. This restriction does not limit the Government's right to use information contained in these data if it has been obtained or is otherwise available from the Contractor or from another source without limitations."

If a VECP is accepted, the Contractor hereby grants the Government unlimited rights in the VECP and supporting data, except that, with respect to data qualifying and submitted as limited rights technical data, the Government shall have the rights specified in the contract modification implementing the VECP and shall appropriately mark the data. (The terms "unlimited rights" and "limited rights" are defined in Part 27 of the Federal Acquisition Regulation.)

(j) Collateral savings. If a VECP is accepted, the Contracting Officer will increase the instant contract amount by 20 percent of any projected collateral savings determined to be realized in a typical year of use after subtracting any Government costs not previously offset. However, the Contractor's share of collateral savings will not exceed the contract's firm-fixed-price or estimated cost, at the time the VECP is accepted, or $100,000, whichever is greater. The Contracting Officer will be the sole determiner of the amount of collateral savings.

(End of clause)

52.249-2 TERMINATION FOR CONVENIENCE OF THE GOVERNMENT (FIXED-PRICE) (SEP 1996) - ALTERNATE I (SEP 1996)

(a) The Government may terminate performance of work under this contract in whole or, from time to time, in part if the Contracting Officer determines that a termination is in the Government's interest. The Contracting Officer shall terminate by delivering to the Contractor a Notice of Termination specifying the extent of termination and the effective date.

(b) After receipt of a Notice of Termination, and except as directed by the Contracting Officer, the Contractor shall immediately proceed with the following obligations, regardless of any delay in determining or adjusting any amounts due under this clause:

(1) Stop work as specified in the notice.

(2) Place no further subcontracts or orders (referred to as subcontracts in this clause) for materials, services, or facilities, except as necessary to complete the continued portion of the contract.

(3) Terminate all subcontracts to the extent they relate to the work terminated.

(4) Assign to the Government, as directed by the Contracting Officer, all right, title, and interest of the Contractor under the subcontracts terminated, in which case the Government shall have the right to settle or to pay any termination settlement proposal arising out of those terminations.

(5) With approval or ratification to the extent required by the Contracting Officer, settle all outstanding liabilities and termination settlement proposals arising from the termination of subcontracts; the approval or ratification will be final for purposes of this clause.

(6) As directed by the Contracting Officer, transfer title and deliver to the Government (i) the fabricated or unfabricated parts, work in process, completed work, supplies, and other material produced or acquired for the work terminated, and (ii) the completed or partially completed plans, drawings, information, and other property that, if the contract had been completed, would be required to be furnished to the Government.

(7) Complete performance of the work not terminated.

(8) Take any action that may be necessary, or that the Contracting Officer may direct, for the protection and preservation of the property related to this contract that is in the possession of the Contractor and in which the Government has or may acquire an interest.

(9) Use its best efforts to sell, as directed or authorized by the Contracting Officer, any property of the types referred to in subparagraph (b)(6) of this clause; provided, however, that the Contractor (i) is not required to extend credit to any purchaser and (ii) may acquire the property under the conditions prescribed by, and at prices approved by, the Contracting Officer. The proceeds of any transfer or disposition will be applied to reduce any payments to be made by the Government under this contract, credited to the price or cost of the work, or paid in any other manner directed by the Contracting Officer.

(c) The Contractor shall submit complete termination inventory schedules no later than 120 days from the effective date of termination, unless extended in writing by the Contracting Officer upon written request of the Contractor within this 120-day period.

(d) After expiration of the plant clearance period as defined in Subpart 45.6 of the Federal Acquisition Regulation, the Contractor may submit to the Contracting Officer a list, certified as to quantity and quality, of termination inventory not previously disposed of, excluding items authorized for disposition by the Contracting Officer. The Contractor may request the Government to remove those items or enter into an agreement for their storage. Within 15 days, the Government will accept title to those items and remove them or enter into a storage agreement. The Contracting Officer may verify the list upon removal of the items, or if stored, within 45 days from submission of the list, and shall correct the list, as necessary, before final settlement.

(e) After termination, the Contractor shall submit a final termination settlement proposal to the Contracting Officer in the form and with the certification prescribed by the Contracting Officer. The Contractor shall submit the proposal promptly, but no later than 1 year from the effective date of termination, unless extended in writing by the Contracting Officer upon written request of the Contractor within this 1-year period. However, if the Contracting Officer determines that the facts justify it, a termination settlement proposal may be received and acted on after 1 year or any extension. If the Contractor fails to submit the proposal within the time allowed, the Contracting Officer may determine, on the basis of information available, the amount, if any, due the Contractor because of the termination and shall pay the amount determined.

(f) Subject to paragraph (e) of this clause, the Contractor and the Contracting Officer may agree upon the whole or any part of the amount to be paid or remaining to be paid because of the termination. The amount may include a reasonable allowance for profit on work done. However, the agreed amount, whether under this paragraph (g) or paragraph (g) of this clause, exclusive of costs shown in subparagraph (g)(3) of this clause, may not exceed the total contract price as reduced by (1) the amount of payments previously made and (2) the contract price of work not terminated. The contract shall be modified, and the Contractor paid the agreed amount. Paragraph (g) of this clause shall not limit, restrict, or affect the amount that may be agreed upon to be paid under this paragraph.

(g) If the Contractor and Contracting Officer fail to agree on the whole amount to be paid the Contractor because of the termination of work, the Contracting Officer shall pay the Contractor the amounts determined as follows, but without duplication of any amounts agreed upon under paragraph (f) of this clause:

(1) For contract work performed before the effective date of termination, the total (without duplication of any items) of--

(i) The cost of this work;

(ii) The cost of settling and paying termination settlement proposals under terminated subcontracts that are properly chargeable to the terminated portion of the contract if not included in subdivision (g)(1)(i) of this clause; and

(iii) A sum, as profit on subdivision (g)(1)(i) of this clause, determined by the Contracting Officer under 49.202 of the Federal Acquisition Regulation, in effect on the date of this contract, to be fair and reasonable; however, if it appears that the Contractor would have sustained a loss on the entire contract had it been completed, the Contracting Officer shall allow no profit under this subdivision (iii) and shall reduce the settlement to reflect the indicated rate of loss.

(2) The reasonable costs of settlement of the work terminated, including--

(i) Accounting, legal, clerical, and other expenses reasonably necessary for the preparation of termination settlement proposals and supporting data;

(ii) The termination and settlement of subcontracts (excluding the amounts of such settlements); and

(iii) Storage, transportation, and other costs incurred, reasonably necessary for the preservation, protection, or disposition of the termination inventory.

(h) Except for normal spoilage, and except to the extent that the Government expressly assumed the risk of loss, the Contracting Officer shall exclude from the amounts payable to the Contractor under paragraph (g) of this clause, the fair value, as determined by the Contracting Officer, of property that is destroyed, lost, stolen, or damaged so as to become undeliverable to the Government or to a buyer.

(i) The cost principles and procedures of Part 31 of the Federal Acquisition Regulation, in effect on the date of this contract, shall govern all costs claimed, agreed to, or determined under this clause.

(j) The Contractor shall have the right of appeal, under the Disputes clause, from any determination made by the Contracting Officer under paragraph (e), (g), or (l) of this clause, except that if the Contractor failed to submit the termination settlement proposal or request for equitable adjustment within the time provided in paragraph (e) or (l), respectively, and failed to request a time extension, there is no right of appeal.

(k) In arriving at the amount due the Contractor under this clause, there shall be deducted--

(1) All unliquidated advance or other payments to the Contractor under the terminated portion of this contract;

(2) Any claim which the Government has against the Contractor under this contract; and

(3) The agreed price for, or the proceeds of sale of, materials, supplies, or other things acquired by the Contractor or sold under the provisions of this clause and not recovered by or credited to the Government.

(l) If the termination is partial, the Contractor may file a proposal with the Contracting Officer for an equitable adjustment of the price(s) of the continued portion of the contract. The Contracting Officer shall make any equitable adjustment agreed upon. Any proposal by the Contractor for an equitable adjustment under this clause shall be requested within 90 days from the effective date of termination unless extended in writing by the Contracting Officer.

(m)(1) The Government may, under the terms and conditions it prescribes, make partial payments and payments against costs incurred by the Contractor for the terminated portion of the contract, if the Contracting Officer believes the total of these payments will not exceed the amount to which the Contractor will be entitled.

(2) If the total payments exceed the amount finally determined to be due, the Contractor shall repay the excess to the Government upon demand, together with interest computed at the rate established by the Secretary of the Treasury under 50 U.S.C. App. 1215(b)(2). Interest shall be computed for the period from the date the excess payment is received by the Contractor to the date the excess is repaid. Interest shall not be charged on any excess payment due to a reduction in the Contractor's termination settlement proposal because of retention or other disposition of termination inventory until 10 days after the date of the retention or disposition, or a later date determined by the Contracting Officer because of the circumstances.

(n) Unless otherwise provided in this contract or by statute, the Contractor shall maintain all records and documents relating to the terminated portion of this contract for 3 years after final settlement. This includes all books and other evidence bearing on the Contractor's costs and expenses under this contract. The Contractor shall make these records and documents available to the Government, at the Contractor's office, at all reasonable times, without any direct charge. If approved by the Contracting Officer, photographs, microphotographs, or other authentic reproductions may be maintained instead of original records and documents.

(End of clause)

52.249-10 DEFAULT (FIXED-PRICE CONSTRUCTION) (APR 1984)

(a) If the Contractor refuses or fails to prosecute the work or any separable part, with the diligence that will insure its completion within the time specified in this contract including any extension, or fails to complete the work within this time, the Government may, by written notice to the Contractor, terminate the right to proceed with the work (or the separable part of the work) that has been delayed. In this event, the Government may take over the work and complete it by contract or otherwise, and may take possession of and use any materials, appliances, and plant on the work site necessary for completing the work. The Contractor and its sureties shall be liable for any damage to the Government resulting from the Contractor's refusal or failure to complete the work within the specified time, whether or not the Contractor's right to proceed with the work is terminated. This liability includes any increased costs incurred by the Government in completing the work.

(b) The Contractor's right to proceed shall not be terminated nor the Contractor charged with damages under this clause, if--

(1) The delay in completing the work arises from unforeseeable causes beyond the control and without the fault or negligence of the Contractor. Examples of such causes include

(i) acts of God or of the public enemy,

(ii) acts of the Government in either its sovereign or contractual capacity,

(iii) acts of another Contractor in the performance of a contract with the Government,

(iv) fires,

(v) floods,

(vi) epidemics,

(vii) quarantine restrictions,

(viii) strikes,

(ix) freight embargoes,

(x) unusually severe weather, or delays of subcontractors or suppliers at any tier arising from unforeseeable causes beyond the control and without the fault or negligence of both the Contractor and the subcontractors or suppliers; and

(2) The Contractor, within 10 days from the beginning of any delay (unless extended by the Contracting Officer), notifies the Contracting Officer in writing of the causes of delay. The Contracting Officer shall ascertain the facts and the extent of delay. If, in the judgment of the Contracting Officer, the findings of fact warrant such action, the time for completing the work shall be extended. The findings of the Contracting Officer shall be final and conclusive on the parties, but subject to appeal under the Disputes clause.

(c) If, after termination of the Contractor's right to proceed, it is determined that the Contractor was not in default, or that the delay was excusable, the rights and obligations of the parties will be the same as if the termination had been issued for the convenience of the Government.

The rights and remedies of the Government in this clause are in addition to any other rights and remedies provided by law or under this contract.

(End of clause)

52.252-4 ALTERATIONS IN CONTRACT (APR 1984)

Portions of this contract are altered as follows:

(End of clause)

52.253-1 COMPUTER GENERATED FORMS (JAN 1991)

(a) Any data required to be submitted on a Standard or Optional Form prescribed by the Federal Acquisition Regulation (FAR) may be submitted on a computer generated version of the form, provided there is no change to the name, content, or sequence of the data elements on the form, and provided the form carries the Standard or Optional Form number and edition date.

(b) Unless prohibited by agency regulations, any data required to be submitted on an agency unique form prescribed by an agency supplement to the FAR may be submitted on a computer generated version of the form provided there is no change to the name, content, or sequence of the data elements on the form and provided the form carries the agency form number and edition date.

(f) If the Contractor submits a computer generated version of a form that is different than the required form, then the rights and obligations of the parties will be determined based on the content of the required form.

(End of clause)

252.201-7000 CONTRACTING OFFICER'S REPRESENTATIVE (DEC 1991)

(a) "Definition. Contracting officer's representative" means an individual designated in accordance with subsection 201.602-2 of the Defense Federal Acquisition Regulation Supplement and authorized in writing by the contracting officer to perform specific technical or administrative functions.

(b) If the Contracting Officer designates a contracting officer's representative (COR), the Contractor will receive a copy of the written designation. It will specify the extent of the COR's authority to act on behalf of the contracting officer. The COR is not authorized to make any commitments or changes that will affect price, quality, quantity, delivery, or any other term or condition of the contract.

(End of clause)

252.203-7001 PROHIBITION ON PERSONS CONVICTED OF FRAUD OR OTHER DEFENSE-CONTRACT-RELATED FELONIES (MAR 1999)

(a) Definitions. As used in this clause—

(1) “Arising out of a contract with the DoD” means any act in connection with—

(i) Attempting to obtain;

(ii) Obtaining, or

(iii) Performing a contract or first-tier subcontract of any agency, department, or component of the Department of Defense (DoD).

(2) “Conviction of fraud or any other felony” means any conviction for fraud or a felony in violation of state or Federal criminal statutes, whether entered on a verdict or plea, including a plea of *nolo contendere*, for which sentence has been imposed.

(3) “Date of conviction” means the date judgment was entered against the individual.

(b) Any individual who is convicted after September 29, 1988, of fraud or any other felony arising out of a contract with the DoD is prohibited from serving--

(1) In a management or supervisory capacity on any DoD contract or first-tier subcontract;

(2) On the board of directors of any DoD contractor or first-tier subcontractor;

(3) As a consultant, agent, or representative for any DoD contractor or first-tier subcontractor; or

(4) In any other capacity with the authority to influence, advise, or control the decisions of any DoD contractor or subcontractor with regard to any DoD contract or first-tier subcontract.

(c) Unless waived, the prohibition in paragraph (b) of this clause applies for not less than 5 years from the date of conviction.

(d) 10 U.S.C. 2408 provides that a defense contractor or first-tier subcontractor shall be subject to a criminal penalty of not more than $500,000 if convicted of knowingly—

(1) Employing a person under a prohibition specified in paragraph (b) of this clause; or

(2) Allowing such a person to serve on the board of directors of the contractor or first-tier subcontractor.

(e) In addition to the criminal penalties contained in 10 U.S.C. 2408, the Government may consider other available remedies, such as—

(1) Suspension or debarment;

(2) Cancellation of the contract at no cost to the Government; or

(3) Termination of the contract for default.

(f) The Contractor may submit written requests for waiver of the prohibition in paragraph (b) of this clause to the Contracting Officer. Requests shall clearly identify—

(1) The person involved;

(2) The nature of the conviction and resultant sentence or punishment imposed;

(3) The reasons for the requested waiver; and

(4) An explanation of why a waiver is in the interest of national security.

(g) The Contractor agrees to include the substance of this clause, appropriately modified to reflect the identity and relationship of the parties, in all first-tier subcontracts exceeding the simplified acquisition threshold in Part 2 of the Federal Acquisition Regulation, except those for commercial items or components.

(h) Pursuant to 10 U.S.C. 2408(c), defense contractors and subcontractors may obtain information as to whether a particular person has been convicted of fraud or any other felony arising out of a contract with the DoD by contacting The Office of Justice Programs, The Denial of Federal Benefits Office, U.S. Department of Justice, telephone (202) 616-3507.

(End of clause)

252.203-7002 DISPLAY OF DOD HOTLINE POSTER (DEC 1991)

(a) The Contractor shall display prominently in common work areas within business segments performing work under Department of Defense (DoD) contracts, DoD Hotline Posters prepared by the DoD Office of the Inspector General.

(b) DoD Hotline Posters may be obtained from the DoD Inspector General, ATTN: Defense Hotline, 400 Army Navy Drive, Washington, DC 22202-2884.

(g) The Contractor need not comply with paragraph (a) of this clause if it has established a mechanism, such as a hotline, by which employees may report suspected instances of improper conduct, and instructions that encourage employees to make such reports.

(End of clause)

252.205-7000 PROVISION OF INFORMATION TO COOPERATIVE AGREEMENT HOLDERS (DEC 1991)

(a) Definition.

"Cooperative agreement holder" means a State or local government; a private, nonprofit organization; a tribal organization (as defined in section 4(c) of the Indian Self-Determination and Education Assistance Act (Pub. L. 93-268; 25 U.S.C. 450 (c))); or an economic enterprise (as defined in section 3(e) of the Indian Financing Act of 1974 (Pub. L. 93-362; 25 U.S.C. 1452(e))) whether such economic enterprise is organized for profit or nonprofit purposes; which has an agreement with the Defense Logistics Agency to furnish procurement technical assistance to business entities.

(b) The Contractor shall provide cooperative agreement holders, upon their request, with a list of those appropriate employees or offices responsible for entering into subcontracts under defense contracts. The list shall include the business address, telephone number, and area of responsibility of each employee or office.

(c) The Contractor need not provide the listing to a particular cooperative agreement holder more frequently than once a year.

(End of clause)

252.215-7000 PRICING ADJUSTMENTS (DEC 1991)

The term "pricing adjustment," as used in paragraph (a) of the clauses entitled "Price Reduction for Defective Cost or Pricing Data - Modifications," "Subcontractor Cost or Pricing Data," and "Subcontractor Cost or Pricing Data - Modifications," means the aggregate increases and/or decreases in cost plus applicable profits.

(End of clause)

252.219-7003 SMALL, SMALL DISADVANTAGED AND WOMEN-OWNED SMALL BUSINESS SUBCONTRACTING PLAN (DOD CONTRACTS) (APR. 1996)

This clause supplements the Federal Acquisition Regulation 52.219-9, Small, Small Disadvantaged and Women-Owned Small Business Subcontracting Plan, clause of this contract.

(a) *Definitions. Historically black colleges and universities,* as used in this clause, means institutions determined by the Secretary of Education to meet the requirements of 34 CFR 608.2. The term also means any nonprofit research institution that was an integral part of such a college or university before November 14, 1986.

Minority institutions, as used in this clause, means institutions meeting the requirements of section 1046(3) of the Higher Education Act of 1965 (20 U.S.C. 1135d-5(3)). The term also includes Hispanic-serving institutions as defined in section 316(b)(1) of such Act (20 U.S.C. 1059c(b)(1)).

(b) Except for company or division-wide commercial items subcontracting plans, the term *small disadvantaged business,* when used in the FAR 52.219-9 clause, includes historically black colleges and universities and minority institutions, in addition to small disadvantaged business concerns.

(c) Work under the contract or its subcontracts shall be credited toward meeting the small disadvantaged business concern goal required by paragraph (d) of the FAR 52.219-9 clause when:

(1) It is performed on Indian lands or in joint venture with an Indian tribe or a tribally-owned corporation, and

(2) It meets the requirements of 10 U.S.C. 2323a.

(d) Subcontracts awarded to workshops approved by the Committee for Purchase from People Who are Blind or Severely Disabled (41 U.S.C. 46-48), may be counted toward the Contractor's small business subcontracting goal.

(e) A mentor firm, under the Pilot Mentor-Protege Program established under Section 831 of Pub. L. 101-510, as amended, may count toward its small disadvantaged business goal, subcontracts awarded--

(f) The master plan approval referred to in paragraph (f) of the FAR 52.219-9 clause is approval by the Contractor's cognizant contract administration activity.

(g) In those subcontracting plans which specifically identify small, small disadvantaged, and women-owned small businesses, the Contractor shall notify the Administrative Contracting Officer of any substitutions of firms that are not small, small disadvantaged, or women-owned small businesses for the firms listed in the subcontracting plan. Notifications shall be in writing and shall occur within a reasonable period of time after award of the subcontract. Contractor-specified formats shall be acceptable.

(End of clause)

252.223-7001 HAZARD WARNING LABELS (DEC 1991)

(a) "Hazardous material," as used in this clause, is defined in the Hazardous Material Identification and Material Safety Data clause of this contract.

(b) The Contractor shall label the item package (unit container) of any hazardous material to be delivered under this contract in accordance with the Hazard Communication Standard (29 CFR 1910.1200 et seq). The Standard requires that the hazard warning label conform to the requirements of the standard unless the material is otherwise subject to the labeling requirements of one of the following statutes:

(1) Federal Insecticide, Fungicide and Rodenticide Act;

(2) Federal Food, Drug and Cosmetics Act;

(3) Consumer Product Safety Act;

(4) Federal Hazardous Substances Act; or

(5) Federal Alcohol Administration Act.

(c) The Offeror shall list which hazardous material listed in the Hazardous Material Identification and Material Safety Data clause of this contract will be labeled in accordance with one of the Acts in paragraphs (b)(1) through (5) of this clause instead of the Hazard Communication Standard. Any hazardous material not listed will be interpreted to mean that a label is required in accordance with the Hazard Communication Standard.

MATERIAL (If None, Insert "None.")	ACT
_____	_____
_____	_____

(d) The apparently successful Offeror agrees to submit, before award, a copy of the hazard warning label for all hazardous materials not listed in paragraph (c) of this clause. The Offeror shall submit the label with the Material

Safety Data Sheet being furnished under the Hazardous Material Identification and Material Safety Data clause of this contract.

(e) The Contractor shall also comply with MIL-STD-129, Marking for Shipment and Storage (including revisions adopted during the term of this contract).

(End of clause)

252.223-7004 DRUG-FREE WORK FORCE (SEP 1988)

(a) Definitions.

(1) "Employee in a sensitive position," as used in this clause, means an employee who has been granted access to classified information; or employees in other positions that the Contractor determines involve national security; health or safety, or functions other than the foregoing requiring a high degree of trust and confidence.

(2) "Illegal drugs," as used in this clause, means controlled substances included in Schedules I and II, as defined by section 802(6) of title 21 of the United States Code, the possession of which is unlawful under chapter 13 of that Title. The term "illegal drugs" does not mean the use of a controlled substance pursuant to a valid prescription or other uses authorized by law.

(b) The Contractor agrees to institute and maintain a program for achieving the objective of a drug-free work force. While this clause defines criteria for such a program, contractors are encouraged to implement alternative approaches comparable to the criteria in paragraph (c) that are designed to achieve the objectives of this clause.

(c) Contractor programs shall include the following, or appropriate alternatives:

(1) Employee assistance programs emphasizing high level direction, education, counseling, rehabilitation, and coordination with available community resources;

(2) Supervisory training to assist in identifying and addressing illegal drug use by Contractor employees;

(3) Provision for self-referrals as well as supervisory referrals to treatment with maximum respect for individual confidentiality consistent with safety and security issues;

(4) Provision for identifying illegal drug users, including testing on a controlled and carefully monitored basis. Employee drug testing programs shall be established taking account of the following:

(i) The Contractor shall establish a program that provides for testing for the use of illegal drugs by employees in sensitive positions. The extent of and criteria for such testing shall be determined by the Contractor based on considerations that include the nature of the work being performed under the contract, the employee's duties, and efficient use of Contractor resources, and the risks to health, safety, or national security that could result from the failure of an employee adequately to discharge his or her position.

(ii) In addition, the Contractor may establish a program for employee drug testing--

(A) When there is a reasonable suspicion that an employee uses illegal drugs; or

(B) When an employees has been involved in an accident or unsafe practice;

(C) As part of or as a follow-up to counseling or rehabilitation for illegal drug use;

(D) As part of a voluntary employee drug testing program.

(iii) The Contractor may establish a program to test applicants for employment for illegal drug use.

(iv) For the purpose of administering this clause, testing for illegal drugs may be limited to those substances for which testing is prescribed by section 2..1 of subpart B of the "Mandatory Guidelines for Federal Workplace Drug Testing Programs" (53 FR 11980 (April 11, 1988), issued by the Department of Health and Human Services.

(d) Contractors shall adopt appropriate personnel procedures to deal with employees who are found to be using drugs illegally. Contractors shall not allow any employee to remain on duty or perform in a sensitive position who is found to use illegal drugs until such times as the Contractor, in accordance with procedures established by the Contractor, determines that the employee may perform in such a position.

(e) The provisions of this clause pertaining to drug testing program shall not apply to the extent that are inconsistent with state or local law, or with an existing collective bargaining agreement; provided that with respect to the latter, the Contractor agrees those issues that are in conflict will be a subject of negotiation at the next collective bargaining session.

(End of clause)

252.223-7006 PROHIBITION ON STORAGE AND DISPOSAL OF TOXIC AND HAZARDOUS MATERIALS (APR 1993)

(a) "Definitions".

As used in this clause --

(1) "Storage" means a non-transitory, semi-permanent or permanent holding, placement, or leaving of material. It does not include a temporary accumulation of a limited quantity of a material used in or a waste generated or resulting from authorized activities, such as servicing, maintenance, or repair of Department of Defense (DoD) items, equipment, or facilities.

(2) "Toxic or hazardous materials" means:

(i) Materials referred to in section 101(14) of the Comprehensive Environmental Response, Compensation, and Liability Act (CERCLA) of 1980 (42 U.S.C. 9601(14)) and materials designated under section 102 of CERCLA (42 U.S.C. 9602) (40 CFR part 302);

(ii) Materials that are of an explosive, flammable, or pyrotechnic nature; or

(iii) Materials otherwise identified by the Secretary of Defense as specified in DoD regulations.

(b) In accordance with 10 U.S.C. 2692, the Contractor is prohibited from storing or disposing of non-DoD-owned toxic or hazardous materials on a DoD installation, except to the extent authorized by a statutory exception to 10 U.S.C. 2692 or as authorized by the Secretary of Defense or his designee.

(End of clause)

252.227-7033 RIGHTS IN SHOP DRAWINGS (APR 1966)

(a) Shop drawings for construction means drawings, submitted to the Government by the Construction Contractor, subcontractor or any lower-tier subcontractor pursuant to a construction contract, showing in detail (i) the proposed fabrication and assembly of structural elements and (ii) the installation (i.e., form, fit, and attachment details) of materials or equipment. The Government may duplicate, use, and disclose in any manner and for any purpose shop drawings delivered under this contract.

(b) This clause, including this paragraph (b), shall be included in all subcontracts hereunder at any tier.

252.236-7000 MODIFICATION PROPOSALS - PRICE BREAKDOWN. (DEC 1991)

(a) The Contractor shall furnish a price breakdown, itemized as required and within the time specified by the Contracting Officer, with any proposal for a contract modification.

(b) The price breakdown --

(1) Must include sufficient detail to permit an analysis of profit, and of all costs for --

(i) Material;

(ii) Labor;

(iii) Equipment;

(iv) Subcontracts; and

(v) Overhead; and

(2) Must cover all work involved in the modification, whether the work was deleted, added, or changed.

(c) The Contractor shall provide similar price breakdowns to support any amounts claimed for subcontracts.

(d) The Contractor's proposal shall include a justification for any time extension proposed.

252.236-7008 CONTRACT PRICES - BIDDING SCHEDULES. (DEC 1991)

(a) The Government's payment for the items listed in the Bidding Schedule shall constitute full compensation to the Contractor for --

(1) Furnishing all plant, labor, equipment, appliances, and materials; and

(2) Performing all operations required to complete the work in conformity with the drawings and specifications.

(b) The Contractor shall include in the prices for the items listed in the Bidding Schedule all costs for work in the specifications, whether or not specifically listed in the Bidding Schedule.

252.243-7001 PRICING OF CONTRACT MODIFICATIONS (DEC 1991)

When costs are a factor in any price adjustment under this contract, the contract cost principles and procedures in

FAR part 31 and DFARS part 231, in effect on the date of this contract, apply.

252.243-7002 REQUESTS FOR EQUITABLE ADJUSTMENT (MAR 1998)

(a) The amount of any request for equitable adjustment to contract terms shall accurately reflect the contract adjustment for which the Contractor believes the Government is liable. The request shall include only costs for performing the change, and shall not include any costs that already have been reimbursed or that have been separately claimed. All indirect costs included in the request shall be properly allocable to the change in accordance with applicable acquisition regulations.

(b) In accordance with 10 U.S.C. 2410(a), any request for equitable adjustment to contract terms that exceeds the simplified acquisition threshold shall bear, at the time of submission, the following certificate executed by an individual authorized to certify the request on behalf of the Contractor:

I certify that the request is made in good faith, and that the supporting data are accurate and complete to the best of my knowledge and belief.

(Official's Name)

(Title)

(c) The certification in paragraph (b) of this clause requires full disclosure of all relevant facts, including--

(1) Cost or pricing data if required in accordance with subsection 15.403-4 of the Federal Acquisition Regulation (FAR); and

(2) Information other than cost or pricing data, in accordance with subsection 15.403-3 of the FAR, including actual cost data and data to support any estimated costs, even if cost or pricing data are not required.

(d) The certification requirement in paragraph (b) of this clause does not apply to----

(1) Requests for routine contract payments; for example, requests for payment for accepted supplies and services, routine vouchers under a cost-reimbursement type contract, or progress payment invoices; or

(2) Final adjustment under an incentive provision of the contract.

(h) TRANSPORTATION OF SUPPLIES BY SEA (MAY 2002) ALTERNATE III (MAY 2002)

(a) Definitions. As used in this clause --

(1) "Components" means articles, materials, and supplies incorporated directly into end products at any level of manufacture, fabrication, or assembly by the Contractor or any subcontractor.

(2) "Department of Defense" (DoD) means the Army, Navy, Air Force, Marine Corps, and defense agencies.

(3) "Foreign flag vessel" means any vessel that is not a U.S.-flag vessel.

(4) "Ocean transportation" means any transportation aboard a ship, vessel, boat, barge, or ferry through international waters.

(5) "Subcontractor" means a supplier, materialman, distributor, or vendor at any level below the prime contractor whose contractual obligation to perform results from, or is conditioned upon, award of the prime contract and who is performing any part of the work or other requirement of the prime contract.

(6) "Supplies" means all property, except land and interests in land, that is clearly identifiable for eventual use by or owned by the DoD at the time of transportation by sea.

(i) An item is clearly identifiable for eventual use by the DoD if, for example, the contract documentation contains a reference to a DoD contract number or a military destination.

(ii) "Supplies" includes (but is not limited to) public works; buildings and facilities; ships; floating equipment and vessels of every character, type, and description, with parts, subassemblies, accessories, and equipment; machine tools; material; equipment; stores of all kinds; end items; construction materials; and components of the foregoing.

(7) "U.S.-flag vessel" means a vessel of the United States or belonging to the United States, including any vessel registered or having national status under the laws of the United States.

(b)(1) The Contractor shall use U.S.-flag vessels when transporting any supplies by sea under this contract.

(2) A subcontractor transporting supplies by sea under this contract shall use U.S.-flag vessels if--

(i) This contract is a construction contract; or

(ii) The supplies being transported are--

(A) Noncommercial items; or

(B) Commercial items that--

(1) The Contractor is reselling or distributing to the Government without adding value (generally, the Contractor does not add value to items that it contracts for f.o.b. destination shipment);

(2) Are shipped in direct support of U.S. military contingency operations, exercises, or forces deployed in humanitarian or peacekeeping operations; or

(3) Are commissary or exchange cargoes transported outside of the Defense Transportation System in accordance with 10 U.S.C. 2643.

(c) The Contractor and its subcontractors may request that the Contracting Officer authorize shipment in foreign-flag vessels, or designate available U.S.-flag vessels, if the Contractor or a subcontractor believes that --

(1) U.S.-flag vessels are not available for timely shipment;

(2) The freight charges are inordinately excessive or unreasonable; or

(3) Freight charges are higher than charges to private persons for transportation of like goods.

(d) The Contractor must submit any request for use of other than U.S.-flag vessels in writing to the Contracting Officer at least 45 days prior to the sailing date necessary to meet its delivery schedules. The Contracting Officer will process requests submitted after such date(s) as expeditiously as possible, but the Contracting Officer's

failure to grant approvals to meet the shipper's sailing date will not of itself constitute a compensable delay under this or any other clause of this contract. Requests shall contain at a minimum --

(1) Type, weight, and cube of cargo;

(2) Required shipping date;

(3) Special handling and discharge requirements;

(4) Loading and discharge points;

(5) Name of shipper and consignee;

(6) Prime contract number; and

(7) A documented description of efforts made to secure U.S.-flag vessels, including points of contact (with names and telephone numbers) with at least two U.S.-flag carriers contacted. Copies of telephone notes, telegraphic and facsimile message or letters will be sufficient for this purpose.

(e) The Contractor shall, within 30 days after each shipment covered by this clause, provide the Contracting Officer and the Maritime Administration, Office of Cargo Preference, U.S. Department of Transportation, 400 Seventh Street SW., Washington, DC 20590, one copy of the rated on board vessel operating carrier's ocean bill of lading, which shall contain the following information:

(1) Prime contract number;

(2) Name of vessel;

(3) Vessel flag of registry;

(4) Date of loading;

(5) Port of loading;

(6) Port of final discharge;

(7) Description of commodity;

(8) Gross weight in pounds and cubic feet if available;

(9) Total ocean freight in U.S. dollars; and

(10) Name of the steamship company.

(f) The Contractor shall insert the substance of this clause, including this paragraph (f), in subcontracts that are for a type of supplies described in paragraph (b)(2) of this clause.

(End of clause)

CLAUSES INCORPORATED BY FULL TEXT

52.211-10 COMMENCEMENT, PROSECUTION, AND COMPLETION OF WORK (APR 1984)

The Contractor shall be required to (a) commence work under this contract within 30 calendar days after the date the Contractor receives the notice to proceed, (b) prosecute the work diligently, and (c) complete the entire work ready for use not later than .360 calendar days from receipt of Notice to Proceed. The time stated for completion shall include final cleanup of the premises.

(End of clause)

52.211-12 LIQUIDATED DAMAGES--CONSTRUCTION (SEP 2000)

(a) If the Contractor fails to complete the work within the time specified in the contract, the Contractor shall pay liquidated damages to the Government in the amount of $952.00 for each calendar day of delay until the work is completed or accepted.

(b) If the Government terminates the Contractor's right to proceed, liquidated damages will continue to accrue until the work is completed. These liquidated damages are in addition to excess costs of repurchase under the Termination clause.

(End of clause)

E4LC11 DEPARTMENT OF LABOR WAGE DECISION (CONSTRUCTION)

Any contract awarded as a result of this solicitation will be subject to the U.S. Department of Labor Wage Decision(s) provided following

General Decision Number VA020035

General Decision Number VA020035

Superseded General Decision No. VA010035

State: **Virginia**
Construction Type:
BUILDING
County(ies):
HAMPTON*

*INDEPENDENT CITY OF HAMPTON (INCLUDING **LANGLEY** AIR FORCE BASE

AND FORT MONROE)

BUILDING CONSTRUCTION PROJECTS (Does not include single family homes and apartments up to and including 4 stories)

Modification Number	Publication Date
0	03/01/2002
1	06/21/2002

COUNTY(ies):
HAMPTON*

ELEC1340A 12/01/2001

	Rates	Fringes
ELECTRICIANS	19.15	2.40+11.25%

ENGI0147D 05/01/2001

	Rates	Fringes
POWER EQUIPMENT OPERATORS:		
Cranes, Under 90 tons	18.88	5.93

---

* IRON0079A 05/01/2002

	Rates	Fringes
IRONWORKERS, RIGGING	19.43	5.06+11.9%

PLUM0540A 05/01/2000

	Rates	Fringes
PLUMBERS & PIPEFITTERS (Including HVAC Work)	20.25	6.37

SUVA1097A 06/11/1999

	Rates	Fringes
ACOUSTICAL CEILING MECHANICS	13.13	
BRICKLAYERS	16.61	
CARPENTERS:		
Form Work ONLY	12.13	2.15
All Other Work (Excluding Drywall Hanging and Acoustical Ceiling Work)	12.90	2.15
CEMENT FINISHERS	11.38	
DRYWALL FINISHERS	12.42	2.15
DRYWALL HANGERS (Including Metal Stud Framing)	13.07	.76
GLAZIERS	16.22	
IRONWORKERS, STRUCTURAL	16.80	4.40
LABORERS:		
Unskilled	7.72	
Mason Tenders, Brick	7.76	
LATHERS	12.00	

PAINTERS, BRUSH AND ROLLER
(Excluding Drywall Finishing) 10.94
PLASTERERS 13.30
POWER EQUIPMENT OPERATORS:
Backhoes 11.58
Forklifts 8.33
ROOFERS 11.94
SHEET METAL PANEL INSTALLERS 10.76 .59

TRUCK DRIVERS, DUMP 8.46

WELDERS - Receive rate prescribed for craft performing operation to which welding is incidental.
==========

Unlisted classifications needed for work not included within the scope of the classifications listed may be added after award only as provided in the labor standards contract clauses (29 CFR 5.5(a)(1)(v)).

In the listing above, the "SU" designation means that rates listed under that identifier do not reflect collectively bargained wage and fringe benefit rates. Other designations indicate unions whose rates have been determined to be prevailing.

WAGE DETERMINATION APPEALS PROCESS

1.) Has there been an initial decision in the matter? This can be:

* an existing published wage determination
* a survey underlying a wage determination
* a Wage and Hour Division letter setting forth a position on a wage determination matter
* a conformance (additional classification and rate) ruling

On survey related matters, initial contact, including requests for summaries of surveys, should be with the Wage and Hour Regional Office for the area in which the survey was conducted because those Regional Offices have responsibility for the Davis-Bacon survey program. If the response from this initial contact is not satisfactory, then the process described in 2.) and 3.) should be followed.

With regard to any other matter not yet ripe for the formal process described here, initial contact should be with the Branch of Construction Wage Determinations. Write to:

Branch of Construction Wage Determinations
Wage and Hour Division

U. S. Department of Labor
200 Constitution Avenue, N. W.
Washington, D. C. 20210

2.) If the answer to the question in 1.) is yes, then an interested party (those affected by the action) can request review and reconsideration from the Wage and Hour Administrator

(See 29 CFR Part 1.8 and 29 CFR Part 7). Write to:

Wage and Hour Administrator
U.S. Department of Labor
200 Constitution Avenue, N. W.
Washington, D. C. 20210

The request should be accompanied by a full statement of the interested party's position and by any information (wage payment data, project description, area practice material, etc.) that the requestor considers relevant to the issue.

3.) If the decision of the Administrator is not favorable, an interested party may appeal directly to the Administrative Review Board (formerly the Wage Appeals Board). Write to:

Administrative Review Board
U. S. Department of Labor
200 Constitution Avenue, N. W.
Washington, D. C. 20210

4.) All decisions by the Administrative Review Board are final.
END OF GENERAL DECISION

E4LC12 REQUIRED INSURANCE

The contractor shall procure and maintain during the entire period of performance under this contract, the following minimum insurance:

TYPE	AMOUNT
Workers Compensation	As required by State law
Employer's Liability	$100,000 per person
General Liability	$500,000 per occurrence
Motor Vehicle Liability (for each motor vehicle):	
Bodily injury or death	$200,000 per person
	$500,000 per occurrence
Property damage	$20,000 per occurrence

Prior to commencement of work hereunder, the contractor shall furnish to the Contracting Officer a certificate or written statement of the above required insurance. The policies evidencing required insurance shall contain an endorsement to the effect that cancellation or any material change in the policies adversely affecting the interests of the Government in such insurance shall not be effective for such period as may be prescribed by the laws of the State in which this contract is to be performed and in no event less than 30 days after written notice thereof to the Contracting Officer.

E4LC 14 PERFORMANCE EVALUATION OF CONTRACTOR

As a minimum, the Contractor's performance will be evaluated upon final acceptance of the work. However, interim evaluations may be prepared at any time during contract performance when determined to be in the best interest of the Government. The format for the evaluation will be DD Form 2626, and the Contractor will be rated either "Outstanding," "Satisfactory," or "Unsatisfactory" in the areas of Contractor Quality Control, Timely Performance, Effectiveness of Management, Compliance with Labor Standards, and Compliance with Safety Standards. The Contractor will be advised on any unsatisfactory rating, either in an individual element or in the overall rating, prior to completing the evaluation; all contractor comments will be made a part of the official record. In compliance with DOD FAR Supplement 236.201, Performance Evaluation Reports will be available to all DOD Contracting Offices for their future use in determining contractor responsibility.

E4LC15 LOCATION OF SITE ON A GOVERNMENT RESERVATION

The site of the work is on a government reservation and all rules and regulations issued by the Commanding Officer covering general safety, security, and sanitary requirements, etc., shall be observed by the contractor.

E4LC16 ACCIDENT PREVENTION PLAN

In accordance with the clause entitled "Accident Prevention," the contractor will not be allowed to commence work on the job site until an acceptable accident prevention plan has been submitted. The contractor will receive official notification of the acceptance of his accident prevention plan.

E4LC19 YEAR 2000 COMPLIANCE (CONSTRUCTION)

In accordance with FAR 39.106, the contractor shall ensure that with respect to any design, construction, goods, or services under this contract, as well as any subsequent task/delivery orders issued under this contract (if applicable), all information technology contained therein shall be Year 2000 (Y2K) compliant. Specifically, the contractor shall:

a. Perform, maintain, and provide an inventory of all major components to include structures, equipment, items, parts, and furnishings under this contract and each task/delivery order which may be affected by the Y2K acompliance requirement.

b. Indicate whether each component is currently Y2K compliant or requires an upgrade for compliance prior to government acceptance.

(End of clause)

E4LC22 PARTNERING

In order to most effectively accomplish this contract, the Government is willing to form a cohesive partnership with the Contractor and its subcontractors. This partnership would strive to draw on the strengths of each organization in an effort to achieve a quality project done right the first time, within budget, and on schedule. This partnership would be bilateral in make-up and participation will be totally voluntary. Any cost associated with affecting this partnership will be agreed to by both parties and will be shared equally with no change in contract price.

E4LC28 IDENTIFICATION OF CORRESPONDENCE

All correspondence and data submitted by the contractor under this contract shall reference the contract number.

E4LC29 AGENTS

Offers signed by an Agent must be made in the name of the Principal and must be accompanied by evidence of said Agent's authority to act on behalf of its Principal.

E4LC46 UNAUTHORIZED INSTRUCTIONS FROM GOVERNMENT OR OTHER PERSONNEL

The contractor shall not accept instructions issued by any person, employed by the U.S. Government or otherwise, other than the Contracting Officer or the Authorized Representative of the Contracting Officer acting within the limits of his/her authority as defined in the Designation of Authority letter. A copy of the Designation of Authority letter will be furnished to the contractor at time of contract award.

E4LC49 DESIGNATION OF AUTHORIZED REPRESENTATIVE OF THE CONTRACTOR

The Contractor shall assign a number or employee who will act as Project Manager during the course of this contract or during the course of a delivery order. This official shall be responsible for affording liaison between the contract forces and the contracting office(s). This designation shall be in writing with a copy furnished to the Contracting Officer.

E4LC57 OVERSIGHT BY DISTRICT COMMANDER

Although the U.S. Army Corps of Engineers has decided that effective 1 Oct 93 District and operation Major Subordinate Commanders will no longer be contracting officers, the Commanders will be expected to exercise oversight on [approve] critical decisions on this contract, including contract award (see FAR clause 52.204-1, Approval of Contract), settlement actions, and alternate dispute resolution (ADR).

E4LC59 PHYSICAL DATA (APR 1984)

Data and information furnished or referred to below is for the Contractor's information. The Government shall not be responsible for any interpretation of or conclusion drawn from the data or information by the Contractor.

(a) The indications of physical conditions on the drawings and in the specifications are the result of site investigations by the methods identified in Division 1 of the specification.

(b) Weather conditions: See Division 1 of the specification.

(c) Transportation facilities: See Division 1 of the specification.

(d) Other Physical Data: See Division 1 of the specification.

(End of clause)

Foundation Analysis
For
Flight Kitchen
Langley Air Force Base
Hampton, Virginia

Project Description

The proposed project consists of a single one-story building to be constructed to serve as a Flight Line Kitchen. The building is to be approximately 66 feet by 90 feet and constructed of structural steel framing with approximately 25-foot high masonry veneer walls. The structure will be framed with steel wide-flange beams and tubular columns. The structure as shown on the 95% submission drawings is supported on a spread footing foundation system consisting of isolated, interior, square column footings, and square column footings integrated into continuous wall footings around the perimeter of the structure.

Site Description

The proposed building site is located at Langley Air Force Base in Hampton, Virginia, at the south end of the East Aircraft Parking Ramp and Hangar Row. The proposed building lies approximately 40' northwest of Building 760.

The surface of the existing building site is relatively flat at an approximate elevation of +6.5 feet MSL and consists of reinforced concrete pavement of a depth ranging from 12 to 20 inches.

The site is underlain by several utilities including an 18-inch concrete storm sewer pipe, a 12-inch storm sewer pipe, an electrical line, a telecommunications line, and a gas line. Grated drop inlets and manholes are also present on the site.

This geotechnical investigation and report applies only to the building design and location as described. If significant changes develop in the building location or the building design, the recommendations and conclusions contained in this report are no longer applicable.

Site Geology:

Langley AFB is located on the outer Coastal Plain of Southeastern Virginia. It lies on the southern extent of the Hampton flat which ranges from 5 to 15 feet NGVD along the lower York-James Peninsula. Pleistocene estuarine deposits that overlie Miocene Age shallow marine sediments underlie the site.

The Miocene sediments comprise the Yorktown formation, which was deposited in a warm shallow sea that existed in this area during late Miocene. Locally, the top of the formation is clayey and yellow brown in color due to leeching and oxidation of the overlying clays. The Yorktown formation is approximately 200 feet thick under the site and is encountered at an average elevation of +4 feet NGVD.

Late Pleistocene estuarine deposits overlie the Yorktown formation and cap the site. These were deposited during late Pleistocene when the sea level rose to approximately +25 feet NGVD and formed an ancestral Chesapeake Bay. A low energy environment existed in the site area during that time resulting in the deposition of sandy and silty clays.

Subsurface Investigation:

On April 9, 2002, a geotechnical investigation was conducted at the proposed project site. Fishburne Drilling, Inc. Chesapeake, Virginia, under the supervision of Norfolk District personnel, drilled three (3) standard penetration test borings to depths of 20 feet. Soil samples were classified according to the "Unified Soil Classification System" and field visual classifications were subsequently verified by laboratory tests.

One undisturbed soil sample (shelby tube) was collected and delivered to McCallum Testing Laboratories, Inc. Chesapeake, Virginia for laboratory testing. A moisture content test, an Atterberg limits test, a specific gravity test, a particle size analysis of soils test, and a one-dimensional consolidation test were performed on samples obtained from the shelby tube.

Groundwater Conditions:

Drilling mud was used to advance the drill hole between SPT tests; therefore, a true groundwater reading was not obtained. However, boring logs from previous projects located in the general vicinity of this project indicate groundwater elevations at +1.0 feet MSL. Groundwater is expected to fluctuate with tide, time of season, precipitation, etc. For design purposes, assume the groundwater table is at a maximum elevation +2.0 feet and dewatering will be required below this elevation.

Environmental Concerns:

Petroleum odors were detected in the soil samples collected in the subsurface investigation. An environmental investigation is currently underway. At the writing of this report, the contaminations levels and extent are not yet known.

Subsurface Conditions:

The soil borings indicate the following generalized soil strata underlie the project site:

Stratum A	From ground surface to an elevation of +2 feet (depth of 6 feet).	12 inches to 20 inches deep concrete pavement underlain by (SC-CL) dark brown to dark gray silty clayey fine to medium sand with traces of shell fragments. Petroleum odor detected. N-values range from 1 to 9 blows per foot with average = 5 blows per foot.
Stratum B	Below stratum A to an elevation of –2 feet (depth of 10 feet).	Brown to gray medium sand and stiff to hard clay with some shell fragments. N-values range from 15 to 31 blows per foot with average = 21 blows per foot.
Stratum C	From elevation –5 feet to –12 feet (depth from 13 feet to 20 feet).	Dark gray fine to medium sand and stiff clay with trace of shell fragments. N-values range from 5 to 10 blows per foot with average = 7 blows per foot.

Table 1. Generalized Soil Profile

Foundation Analysis/Design:

Structure

Soil borings and laboratory test results detected a soft silty clayey layer at depths ranging from 4 feet to 6 feet below existing ground surface. The one-dimensional consolidation testing indicated the material was slightly preconsolidated with an overconsolidation ratio of 1.65, a preconsolidation pressure of .95 ksf, a coefficient of consolidation (C_v) of 0.84 ft^2/day, and had compression (C_{ε_c}) and recompression ratios (C_{ε_r}) of 0.15 and .016, respectively. For typical single story building construction at LAFB, the slightly over-consolidated nature of the foundation soils combined with relatively small footing sizes results in calculated building settlements of under an inch. However, the 95% Flightline Kitchen drawings indicate relatively large footing sizes, with column footings as large as 9.5 X 9.5 feet square. The drawings also indicate the design bearing elevation for the foundation footings is at elevation +4.25. As indicated by the third column of Table 2, the relatively large footing sizes coupled with the relatively low foundation bearing elevation (+4.25) results in calculated settlements in excess of an inch. Differential settlement is expected to be 75% of the calculated total settlements. Because of the relatively high coefficient of consolidation (C_v), the majority of this settlement is expected to take place during the construction period as load is applied.

If the calculated total and differential settlements for the current design exceed that considered tolerable from a structural perspective, then the following options should be considered to reduce settlements to tolerable limits (1) raise the bearing elevation of the footings to a higher elevation to reduce the stress increase in the soft layer, (2) surcharge the building site to initiate consolidation of the compressible soils and reduce post-construction settlements, (3) over-excavate the soft compressible material from beneath the footings and replace excavated material with crushed rock or gravel, and (4) utilize a deep foundation system.

Option (1) RAISE FOOTINGS: Raising the bearing elevation of the footings from +4.25 to +6.0 would reduce the calculated stress increase in the soft compressible zone by 25 to 30 percent. The third column of Table 2 shows the calculated settlements for footings bearing at elevation +6.0. As shown in the table, the calculated settlements range from 0.59 to 1.2 inches. As stated previously, because of the relatively high coefficient of consolidation (C_v), the majority of the settlement is expected to take place during the construction period, therefore, actual post-construction settlements are expected to be less than one inch with differential settlement of less than 0.75 inches. If shallow foundations are used recommend footings be designed with steel reinforcement, top and bottom, to help bridge irregularities in the supporting foundation soils and minimize the effects of differential settlements.

Footing Size (feet)	**Footing Total Settlement (inches) Bearing Elev +4.25/Bearing Elev +6.0**	**Footing, slab, and fill Total Settlement (inches) Bearing Elev +4.25/Bearing Elev +6**
4.5 x 4.5 Isolated	0.64/0.18	0.96/0.59
6.0 x 6.0 Isolated	0.92/0.49	0.1.18/0.84
8.0 x 8.0 Isolated	1.11/0.79	1.36/1.08
9.5 x 9.5 Isolated	1.19/0.93	1.43/1.20
3.25 Continuous	0.73/0.40	1.03/0.76
4.33 Continuous	0.92/0.62	1.19/0.94

Table 2. Calculated Settlements

Option (2) SURCHARGING: Surcharging the building site will initiate consolidation of the compressible soils prior to construction of the foundation system and thus reduce post-construction settlements. Surcharging involves placing temporary fill material over the building site to create stress increases in the underlying soft compressible clay layer. The stress increase in-turn causes the compressible clay layer to consolidate (i.e., settle). The theoretical post construction settlement is essentially the difference between the calculated settlement, shown in Table 2, and the settlement which occurs during the surcharge period. The magnitude of settlement from the surcharge would depend on the height and aerial extent of the surcharge material. For example, if 10 feet of fill (9.5 feet crest width and 1V:1H side slopes) were placed to elevation +18.0, around the perimeter of the proposed building, the calculated settlement from the surcharge would be approximately 0.97 inches. Similarly, if 5 feet of fill (9.5 feet crest width and 1V:1H side slopes) were placed to elevation +13.0, around the perimeter of the proposed building, the calculated settlement from the surcharge would be approximately 0.25. Upon achieving the desired magnitude of settlement, the surcharge fill is removed and construction of the foundation system can commence.

The time rate of consolidation, shown in Table 3, is based on the coefficient of consolidation (C_v) of 0.84 ft^2/day, obtained from the one-dimensional consolidation test data and an assumed conservative drainage layer thickness of 6 feet. As shown, 80% of primary consolidation is expected to occur within 25 days. Should the designer desire to pursue the surcharge option in more detail, this office remains available to provide technical assistance, as required, to better define the surcharge option to achieve a specific desired outcome.

Percent Consolidation, (U%)	Time in Days, (T)
10%	1
20%	2
30%	3
40%	6
50%	9
60%	13
70%	18
80%	25
90%	37
95%	52

Table 2. Time Rate of Consolidation (i.e., Settlement)

Option 3 OVEREXCAVATION: Over-excavation of the soft compressible material from beneath the footings and replacement of the excavated material with crushed rock or gravel, will reduce the post-construction settlements to negligible limits. This option would involve overexcavating to elevation +0.0 to remove the soft clay material. The over-excavated material would be replaced with crushed rock or gravel to provide a firm base for footing construction and to aid in the dewatering process. The compacted gravel shall extend out horizontally from each side of the footing, a minimum of 6 inches beyond the plane of the footing at a slope of 6 inches horizontal for every foot of depth below the bearing elevation of the footing. The presence of potentially contaminated soil and groundwater in the over-excavation zone makes this a potentially uneconomical option should the environmental investigation indicate the excavated soil and 'dewatering' water require special handling due to contamination levels. See additional information under paragraph "Site Preparation."

Option 4 DEEP FOUNDATION: A deep foundation system could be used to support the Flightline Kitchen structure and would minimize total and differential settlements. Other pile supported infrastructure associated with the F-22 Complex are supported on 12" X 12" prestressed concrete piles, approximately 25 feet in length with allowable load capacities of 25 tons (FS=2). If a deep foundation system is selected for the Flightline Kitchen, similar pile sizes, pile lengths and allowable load capacities are recommended for design of the foundation system. Other pile types, sizes, and allowable loads are available upon request. Given the recent PDA and static pile load testing performed at LAFB for the F-22 related infrastructure and other projects, there is ample correlative information between PDA test results and static pile load test results to preclude the necessity of further expensive static pile load testing, assuming the PDA testing verifies design capacities. Notwithstanding, if a deep foundation system is ultimately chosen, a unit price static pile load test is still recommended for inclusion in the contract documents, as a continingency against questionable PDA test results.

Pavement

For design of concrete pavement and exterior and interior slabs-on-grades, a Modulus of Subgrade Reaction (k, in/lb^3) to 90 pci is recommended. All interior floor slabs on grade shall be underlain by a 6-mil polyethylene vapor barrier, and a minimum 6-inch capillary water barrier consisting of VDOT No. 57 stone. Prior to placement of the capillary water

barrier, the subgrade shall be compacted to 90 to 95 percent of laboratory maximum density (ASTM D-1557) for cohesive and cohesionless materials, respectively.

For design of flexible pavement a CBR = 4 is recommended. Prior to placement of the pavement subbase and/or base course, the subgrade shall be compacted to 90 to 95 percent of laboratory maximum density (ASTM D-1557) for cohesive and cohesionless materials, respectively.

Site Preparation:

To ensure a firm, uniform base for subsequent foundation construction, all fill material shall be placed in 8-inch uncompacted (6-inch compacted) lifts and compacted to 90 to 95 percent of ASTM D-1557 maximum laboratory density for cohesive and cohesionless soils, respectively. The reinforced concrete pavement at the surface of the site to a depth of 12 inches to 20 inches is to be removed.

Soils classified by the "Unified Soil Classification System as" GW, GP, GC, GM, SW, SP, SC, and SM, are satisfactory insitu and fill and backfill beneath the building footprints, provided less than 20% of the material is smaller than the 200 sieve size. Materials and soils classified as CL, CH, ML and MH are satisfactory insitu and as fill and backfill outside the building footprint. Soils classified as OH, OL, and PT are unsatisfactory insitu, fill and backfill.

Prepared by:
Holly K. Bautts Kidd
U.S. Army Corps of Engineers
Civil Engineer, Geotechnical Sec.
757-441-7535

PROJECT TABLE OF CONTENTS

DIVISION 01 - GENERAL REQUIREMENTS

01005 PROJECT WORK REQUIREMENTS AND RESTRICTIONS
01111 SAFETY AND HEALTH REQUIREMENTS
01200 PROJECT MEETINGS
01312 RESIDENT MANAGEMENT SYSTEM (RMS)
01320 PROJECT SCHEDULE
01330 SUBMITTAL PROCEDURES
01341 COLOR/FINISH SAMPLE BOARDS
01355 ENVIRONMENTAL PROTECTION
01356 STORM WATER POLLUTION PREVENTION MEASURES
01420 SOURCES FOR REFERENCE PUBLICATIONS
01451 CONTRACTOR QUALITY CONTROL
01500 TEMPORARY CONSTRUCTION FACILITIES
01572 CONSTRUCTION AND DEMOLITION WASTE MANAGEMENT
01670 RECYCLED / RECOVERED MATERIALS
01780 CLOSEOUT SUBMITTALS
01781 OPERATION AND MAINTENANCE DATA

DIVISION 02 - SITE WORK

02220 DEMOLITION
02230 CLEARING AND GRUBBING
02300 EARTHWORK
02315 EXCAVATION, FILLING AND BACKFILLING FOR BUILDINGS
02316 EXCAVATION, TRENCHING, AND BACKFILLING FOR UTILITIES SYSTEMS
02364 TERMITICIDE TREATMENT MEASURES FOR SUBTERRANEAN TERMITE CONTROL
02510 WATER DISTRIBUTION SYSTEM
02531 SANITARY SEWERS
02532 FORCE MAINS AND INVERTED SIPHONS; SEWER
02630 STORM-DRAINAGE SYSTEM
02722 AGGREGATE BASE COURSE
02741 HOT-MIX ASPHALT (HMA) FOR ROADS
02748 BITUMINOUS TACK AND PRIME COATS
02754 CONCRETE PAVEMENTS FOR SMALL PROJECTS
02760 FIELD MOLDED SEALANTS FOR SEALING JOINTS IN RIGID PAVEMENTS
02763 PAVEMENT MARKINGS
02770 CONCRETE SIDEWALKS AND CURBS AND GUTTERS
02800 ORNAMENTAL ALUMINUM FENCE
02811 IRRIGATION SYSTEM
02821 FENCING
02922 SODDING

DIVISION 03 - CONCRETE

03100 STRUCTURAL CONCRETE FORMWORK
03150 EXPANSION JOINTS, CONTRACTION JOINTS, AND WATERSTOPS
03200 CONCRETE REINFORCEMENT
03300 CAST-IN-PLACE STRUCTURAL CONCRETE

DIVISION 04 - MASONRY

04200 MASONRY
04220 NONBEARING MASONRY VENEER/STEEL STUD WALLS
04720 CAST STONE

DIVISION 05 - METALS

05090 WELDING, STRUCTURAL
05120 STRUCTURAL STEEL
05210 STEEL JOISTS
05300 STEEL DECKING
05400 COLD-FORMED STEEL FRAMING
05500 MISCELLANEOUS METAL

DIVISION 06 - WOODS & PLASTICS

06100 ROUGH CARPENTRY
06410 LAMINATE CLAD ARCHITECTURAL CASEWORK
06700 ANCHORS AND FASTENERS

DIVISION 07 - THERMAL & MOISTURE PROTECTION

07220 ROOF INSULATION
07412 NON-STRUCTURAL METAL ROOFING
07413 METAL SOFFITS AND WALL PANELS
07510 4-PLY BUILT-UP ROOFING
07600 SHEET METALWORK, GENERAL
07840 FIRESTOPPING
07900 JOINT SEALING

DIVISION 08 - DOORS & WINDOWS

08110 STEEL DOORS AND FRAMES
08120 ALUMINUM DOORS, WINDOWS AND FRAMES
08710 DOOR HARDWARE
08810 GLASS AND GLAZING

DIVISION 09 - FINISHES

09250 GYPSUM WALLBOARD
09310 CERAMIC TILE
09510 ACOUSTICAL CEILINGS
09650 RESILIENT BASE
09720 WALLCOVERINGS
09771 FIBERGLASS REINFORCED PLASTIC PANELS (FRP)
09900 PAINTS AND COATINGS

DIVISION 10 - SPECIALTIES

10160 TOILET PARTITIONS
10200 ARCHITECTURAL LOUVERS
10430 EXTERIOR SIGNAGE
10440 INTERIOR SIGNAGE
10505 STEEL CLOTHING LOCKERS
10522 FIRE EXTINGUISHERS CABINETS
10800 TOILET ACCESSORIES

DIVISION 11 - EQUIPMENT

11310 PUMPS; SEWAGE AND SLUDGE
11400 FOOD SERVICE EQUIPMENT

DIVISION 12 - FURNISHINGS

12490 WINDOW TREATMENT

DIVISION 13 - SPECIAL CONSTRUCTION

13080 SEISMIC/FORCE PROTECTION FOR MISCELLANEOUS EQUIPMENT
13110 CATHODIC PROTECTION SYSTEM (SACRIFICIAL ANODE)
13930 WET PIPE SPRINKLER SYSTEM, FIRE PROTECTION

DIVISION 15 - MECHANICAL

15070 SEISMIC/FORCE PROTECTION FOR MECHANICAL EQUIPMENT
15080 THERMAL INSULATION FOR MECHANICAL SYSTEMS
15182 REFRIGERANT PIPING
15190 GAS PIPING SYSTEMS
15400 PLUMBING, GENERAL PURPOSE
15700 UNITARY HEATING AND COOLING EQUIPMENT
15768 ELECTRIC SPACE HEATING EQUIPMENT
15895 AIR SUPPLY, DISTRIBUTION, VENTILATION, AND EXHAUST SYSTEM
15951 DIRECT DIGITAL CONTROL FOR HVAC
15990 TESTING, ADJUSTING, AND BALANCING OF HVAC SYSTEMS
15995 COMMISSIONING OF HVAC SYSTEMS

DIVISION 16 - ELECTRICAL

16050 BASIC ELECTRICAL MATERIALS AND METHODS
16375 ELECTRICAL DISTRIBUTION SYSTEM, UNDERGROUND
16415 ELECTRICAL WORK, INTERIOR
16710 PREMISES DISTRIBUTION SYSTEM
16721 FIRE DETECTION AND ALARM SYSTEM
16770 RADIO AND PUBLIC ADDRESS SYSTEMS

-- End of Project Table of Contents --

SECTION 01005

PROJECT WORK REQUIREMENTS AND RESTRICTIONS
03/00

PART 1 GENERAL

1.1 SUPERVISION BY THE CONTRACTOR

The following requirements, in addition to those contained in the Contract Clause entitled: SUPERINTENDENCE BY CONTRACTOR, shall be met by the Contractor.

1.1.1 Authority of Contractor Representative

The Site representative appointed by the Contractor and approved by the Contracting Officer shall, as a minimum, have the following authority:

a. To negotiate and execute Supplemental Agreements having a value up to $100,000.

1.2 DEFINITIONS

a. Facility: The facility is Langley Air Force Base, Virginia.

b. CO: Contracting Officer or his authorized representative.

1.3 COOPERATION WITH USING AGENCY AND OTHER CONTRACTORS

During the period of this contract, other contracts may be in force for the construction of other features of work on or adjacent to the site of work being accomplished under this contract. It shall be the responsibility of the Contractor on this contract to be fully informed of the extent of the limits of work to be performed by other Contractors. Should there be any conflict between these limits, it shall be brought to the attention of the Contracting Officer and the CO's decision shall be final. Also, prior to completion of work under this contract, members of the Using Agency may be performing work or occupying facilities on or adjacent to the area. The Contractor shall arrange his plant and shall schedule and perform this work so as to effectively cooperate with all other Contractors and Government agencies.

1.4 PERSONNEL RESTRICTIONS

Personnel are limited to the immediate site areas and shall not enter buildings or facilities not involved in the work. All employees of the Contractor will be subject to all rules and regulations of the Facility which pertain to personnel. The Contractor shall erect fences and signs as specified and be responsible for the restrictions of all personnel. The Contractor's plans for restricting personnel access to the project site shall be submitted for approval as a part of the Safety Plan (Accident Prevention Plan).

1.5 TRANSPORTATION FACILITIES

The Facility is served by an all weather surfaced road network. Roads

within the Facility proposed to be used by the Contractor shall be subject to prior approval of the Facility authorities and such roads, if used, shall be maintained throughout construction and shall be restored to as good condition as existed prior to their use. The Contractor shall also construct, subject to approval, such temporary haul roads and bridges as may be necessary for conducting his work. Any such temporary construction shall be removed and the affected area restored to its original condition. All costs for the use of existing transportation facilities, for the construction of temporary facilities, and for maintenance, repair, removal and restoration shall be borne by the Contractor.

1.5.1 Use of Roads

The Contractor shall keep all roads clear of all obstructions and free of mud and other foreign materials resulting from operations. The Contractor's vehicles shall at no time follow a vehicle closer than 50 feet, and all vehicles shall pull off the road and come to a complete stop when meeting emergency vehicles and vehicles with flashing lights. Facility speed limits and traffic controls will be observed.

1.5.2 Road Restrictions

The movement of all vehicles within the Facility shall be confined to the roads designated and shall comply with traffic regulations within the Facility. Other roads may be used only with the approval of the CO.

1.5.2.1 Cleated Vehicles

Cleated vehicles shall not be moved over surfaced roads except at the immediate site of the area where they are to be used.

1.6 COORDINATION IN WORK AREAS

1.6.1 Unoccupied Work Area

The area where the Contractor is scheduled to perform the work will not be occupied during the work, however, the Contractors work activities may affect other areas adjacent to the work site that are occupied. All work shall be in accordance with the Contractor's work plan.

1.6.2 Maintenance of Utilities

Any active utilities, including but not limited to electricity, gas, water, sewer, heating, air conditioning, or any like service, that will require interruption or replacement in any occupied area affected as a result of the Contractors scheduled work activities, shall be temporarily provided by the Contractor at his own expense until the affected service is fully and permanently restored. All temporary methods of service replacement the Contractor proposes for use on this contract shall be approved by the Contracting Officer prior to commencing the work.

1.6.3 Hours of Work

The normal work hours for construction can be from 7:00 a.m. to 9:00 p.m., Monday through Friday of each week. Any request to change these hours shall be made in writing to the Contracting Officer at least two calendar days prior to the desired day on which the change is to go into effect. The changed hours shall not go into effect until written permission has been received from the Contracting Officer.

1.6.4 Digging Permits

Contractor is responsible for obtaining all digging permits, including associated locating and marking services, in accordance with installation and local requirements, at no additional cost to the Government.

1.7 INTERRUPTIONS OF UTILITIES

1.7.1 Approval

Utility services shall not be interrupted by the Contractor to relocate, make connections, or interrupt for any purpose, without written approval of the Contracting Officer.

1.7.2 Request

Request for permission to shut down services shall be submitted in writing to the Contracting Officer not less than 10 calendar days prior to date of proposed interruption. The request shall give the following information:

a. Nature of Utility (Gas, L.P. or H.P., Water, Elec.)

b. Size of line and location of shutoff.

c. Buildings and services affected.

d. Hours and date of shutoff.

e. Estimated length of time service will be interrupted.

1.7.3 Service Interruptions

Services shall not be shut off until receipt of approval of the proposed hours and date from the Contracting Officer.

1.7.4 Timely Disconnections

Shutoffs which will cause interruption of Government work operations as determined by the Contracting Officer shall be accomplished during regular non-work hours or non-work days of the Using Agency without any additional cost to the Government.

1.7.5 Utilities Operation

Operation of valves on water mains will be by Government personnel. Where shutoff of water lines interrupts service to fire hydrants or fire sprinkler systems, the Base Contracting Officer and the Fire Department shall be notified by the Contractor in writing 72 hours prior to the proposed interruption. The Contractor shall arrange his operations and have sufficient material and personnel available to complete the work without undue delay and shall restore service without delay in event of emergency.

1.7.6 Gas

Flow in gas mains which have been shut off shall not be restored until the Government inspector has determined that all items serviced by the gas line have been shut off.

1.8 PHYSICAL DATA

The physical conditions indicated on the drawings and in the specifications are the result of site visits, geophysical surveys, topographic surveys and geotechnical borings and explorations. See the applicable APPENDICES provided with these specifications for additional physical data.

1.9 TIME EXTENSIONS FOR UNUSUALLY SEVERE WEATHER

This provision specifies the procedure for the determination of time extensions for unusually severe weather in accordance with the Contract Clause entitled "Default: (Fixed Price Construction)". In order for the Contracting Officer to award a time extension under this clause, the following conditions must be satisfied:

a. The weather experienced at the project site during the contract period must be found to be unusually severe, that is, more severe than the adverse weather anticipated for the project location during any given month.

b. The unusually severe weather must actually cause a delay to the completion of the project. The delay must be beyond the control and without the fault or negligence of the contractor.

1.9.1 Schedule

The following schedule of monthly anticipated adverse weather delays is based on National Oceanic and Atmospheric Administration (NOAA) or similar data for the project location and will constitute the base line for monthly weather time evaluations. The contractor's progress schedule must reflect these anticipated adverse weather delays in all weather dependent activities.

MONTHLY ANTICIPATED ADVERSE WEATHER DAYS
WORK DAYS BASED ON (5) DAY WORK WEEK

	JAN	FEB	MAR	APR	MAY	JUN	JUL	AUG	SEP	OCT	NOV	DEC
Langley AFB	9	9	9	6	7	6	7	7	5	6	7	9

1.9.2 Records

Upon acknowledgement of the Notice to Proceed and continuing throughout the contract, the contractor will record on the daily CQC report, the occurrence of adverse weather and resultant impact to normally scheduled work. Actual adverse weather delay days must prevent work on critical activities for 50 percent or more of the contractor's scheduled work day.

1.9.3 Impacted Days

The number of actual adverse weather days shall include days impacted by actual adverse weather (even if adverse weather occurred in previous month), be calculated chronologically from the first to the last day in each month, and be recorded as full days. If the number of actual adverse weather delay days exceeds the number of days anticipated in the schedule of monthly anticipated adverse weather delays, above, the contracting

officer will convert any qualifying delays to calendar days, giving full consideration for equivalent fair weather work days, and issue a modification in accordance with the Contract Clauses entitled "Default (Fixed Price Construction)".

1.10 WORK IN QUARANTINED AREA

The work called for by this contract involves activities in counties quarantined by the Department of Agriculture to prevent the spread of certain plant pests which may be present in the soil. The Contractor agrees that all construction equipment and tools to be moved from such counties shall be thoroughly cleaned of all soil residues at the construction site with water under pressure and that hand tools shall be thoroughly cleaned by brushing or other means to remove all soil. In addition, if this contract involves the identification, shipping, storage, testing, or disposal of soils from such a quarantined area, the Contractor agrees to comply with the provisions of ER 1110-1-5 and attachments, a copy of which will be made available by the Contracting Officer upon request. The Contractor agrees to assure compliance with this obligation by all subcontractors.

1.11 HISTORICAL AND ARCHAEOLOGICAL FINDS

Federal legislation provides for the protection, preservation, and collection of scientific, prehistorical, historical, and archaeological data, including relics and specimens which might otherwise be lost due to alteration of the terrain or building features as a result of any Federal construction project. Should the Contractor, or any of the Contractor's employees, or parties operating or associated with the Contractor, in the performance of this contract discover evidence of possible scientific, prehistorical, historical, or archaeological data, the Contractor shall immediately cease work at that location and notify the Contracting Officer, giving the location and nature of the findings. The Contractor shall forward written confirmation to the Contracting Officer as directed. The Contractor shall exercise care so as not to disturb or damage artifacts or fossils uncovered during excavation operations, and shall provide such cooperation and assistance as may be necessary to preserve the findings for removal or other disposition. Any person who, without permission, injures, destroys, excavates, appropriates, or removes any historical or prehistorical artifact, object of antiquity, or archaeological resource on the public lands of the United States is subject to arrest and penalty of law. Where appropriate by reason of discovery, the Contracting Officer may order delays in the time of performance or changes in the work, or both. If such delays or changes are ordered, an equitable adjustment will be made in the contract in accordance with the applicable clauses of the contract.

1.12 EQUIPMENT-IN-PLACE LIST:

The Contractor shall maintain a list of equipment installed under the terms of the contract using the government provided RMS database. Forms to be used for this purpose shall be obtained from the Area Engineer's Office. The list shall include the following:

a. Contract number
b. Description of item
c. Model number
d. Serial number
e. Capacity
f. Name of manufacturer

g. Address of manufacturer
h. Condition of item
i. Replacement cost
j. Name of person who checked item

1.13 EQUIPMENT OWNERSHIP AND OPERATING EXPENSE SCHEDULE

1.13.1 Allowable Costs

Allowable cost for construction and marine plant and equipment in sound workable condition owned or controlled and furnished by a Contractor or subcontractor at any tier shall be based on actual cost data when the Government can determine both ownership and operating costs for each piece of equipment or equipment groups of similar serial and series from the Contractor's accounting records. When both ownership and operating costs cannot be determined from the Contractor's accounting records, equipment costs shall be based upon the applicable provisions of EP 1110-1-8, "Construction Equipment Ownership and Operating Expense Schedule," Region II. Working conditions shall be considered to be average for determining equipment rates using the schedule unless specified otherwise by the Contracting Officer. For equipment not included in the schedule, rates for comparable pieces of equipment may be used or a rate may be developed using the formula provided in the schedule. For forward pricing, the schedule in effect at the time of negotiations shall apply. For retrospective pricing, the schedule in effect at the time the work was performed shall apply.

1.13.2 Rental Costs

Equipment rental costs are allowable, subject to the applicable provisions of the Federal Acquisition Regulations, and shall be substantiated by certified copies of paid invoices. Rates for equipment rented from an organization under common control, lease-purchase or sale-leaseback arrangements will be determined using the schedule except that rental costs leased form an organization under common control that has an established practice of leasing the same or similar equipment to unaffiliated lessees are allowable. Costs for major repairs and overhaul are unallowable.

1.13.3 Equipment Costs

When actual equipment costs are proposed and the total amount of the pricing action is over $25,000, cost or pricing data shall be submitted on the Standard Form 1411, "Contract Pricing Proposal Cover Sheet". By submitting cost or pricing data, the Contractor grants to the Contracting Officer or an authorizing representative the right to examine those books, records, documents and other supporting data that will permit evaluation of the proposed equipment costs. After price agreement the Contractor shall certify that the equipment costs or pricing data submitted are accurate, complete and current.

1.14 SUBCONTRACTS AND WORK COORDINATION

Contract Clauses "SUBCONTRACTS", "PERMITS AND RESPONSIBILITIES", and "MATERIAL AND WORKMANSHIP" are supplemented as follows:

a. Divisions or sections of specifications are not intended to control the Contractor in dividing the work among subcontractors, or to limit work performed by any trade.

b. Contractor shall be responsible for coordination of the work

of the trades, subcontractors, and materials.

c. The Government or its representative will not undertake to settle any difference between the Contractor and Contractor's subcontractors, or between subcontractors.

d. The Government reserves the right to refuse to permit employment on the work or require dismissal from the work of any subcontractor who, by reason of previous unsatisfactory work on Corps of Engineers projects, or for any other reason is considered by the Contracting Officer to be incompetent or otherwise objectionable.

1.15 CONSTRUCTION MANPOWER AND EQUIPMENT REPORT

The Contractor shall enter the Construction Manpower and Equipment Report into the RMS database on a daily basis . The report shall include manpower and equipment for the general and subcontractors.

1.16 PROFIT

1.16.1 Weighted Guidelines

Weighted guidelines method of determining profit shall be used on any equitable adjustment change order or modification issued under this contract. The profit factors shall be as follows:

Factor	Rate	Weight	Value
Degree of Risk	20		
Relative difficulty of work	15		
Size of Job	15		
Period of performance	15		
Contractor's investment	05		
Assistance by Government	05		
Subcontracting	25		
	100		

1.16.2 Value

Based on the circumstances of each procurement action, each of the above factors shall be weighted from .03 to .12 as indicated below. The value shall be obtained by multiplying the rate by the weight. The value column when totalled indicates the fair and reasonable profit percentage under the circumstances of the particular procurement.

1.16.2.1 Degree of Risk

Where the work involves no risk or the degree of risk is very small, the weighting should be .03; as the degree of risk increases, the weighting should be increased up to a maximum of .12. Lump sum items will have, generally, a higher weighted value than the unit price items for which quantities are provided. Other things to consider: the portion of the work to be done by subcontractors, nature of work, where work is to be performed, reasonableness of negotiated costs, amount of labor included in costs, and whether the negotiation is before or after performance of work.

1.16.2.2 Relative Difficulty of Work

It the work is most difficult and complex, the weighting should be .12 and should be proportionately reduced to .03 on the simplest of jobs. This factor is tied in to some extent with the degree of risk. Some things to consider: the nature of the work, by whom it is to be done, where, and what is the time schedule.

1.16.2.3 Size of Job

All work not in excess of $100,000 shall be weighted at .12. Work estimated between $100,000 and $5,000,000 shall be proportionately weighted from .12 to .05.

1.16.2.4 Periods of Performance

Jobs in excess of 24 months are to be weighted at .12. Jobs of lesser duration are to be proportionately weighted to a minimum of .03 for jobs not to exceed 30 days. No weight where additional time not required.

1.16.2.5 Contractor's Investment

To be weighted from .03 to .12 on the basis of below average, average, and above average. Things to consider: amount of subcontracting, mobilization payment item, Government furnished property, equipment and facilities, and expediting assistance.

1.16.2.6 Assistance by Government

To be weighted from .12 to .03 on the basis of average to above average. Things to consider: use of Government owned property, equipment and facilities, and expediting assistance.

1.16.2.7 Subcontracting

To be weighted inversely proportional to the amount of subcontracting. Where 80 percent or more of the work is to be subcontracted, the weighting is to be .03 and such weighting proportionately increased to .12 where all the work is performed by the Contractor's own forces.

PART 2 PRODUCTS (THIS PART NOT USED)

PART 3 EXECUTION (THIS PART NOT USED)

-- End of Section --

SECTION 01111

SAFETY AND HEALTH REQUIREMENTS
03/98

PART 1 GENERAL

1.1 REFERENCES

The publications listed below form a part of this specification to the extent referenced. The publications are referred to in the text by basic designation only.

U.S. ARMY CORPS OF ENGINEERS (USACE)

EM 385-1-1	(1996) Safety and Health Requirements Manual

U.S. NATIONAL ARCHIVES AND RECORDS ADMINISTRATION (NARA)

29 CFR 1910	Occupational Safety and Health Standards, General Industry.
29 CFR 1926	Occupational Safety and Health Standards, Construction Industry.

1.2 SUBMITTALS

The following shall be submitted in accordance with Section 01330 SUBMITTAL PROCEDURES:

SD-01 Preconstruction Submittals

Accident Prevention Plan (APP); G

SD-07 Certificates

Designated first-aid and CPR trained attendants; G

1.3 SAFETY REQUIREMENTS AND ACCIDENT PREVENTION

1.3.1 Standards

The Contractor shall comply with Occupational Safety and Health Act (OSHA) Standards, the Corps of Engineers Manual EM 385-1-1, "Safety and Health Requirements Manual," NFPA 101, and all applicable state, local, and facility safety and occupational health requirements.

1.4 ACCIDENT PREVENTION PLAN

1.4.1 Preparation and Implementation

An Accident Prevention Plan (APP) shall be prepared covering onsite work to be performed by the Contractor and all subcontractors, and shall at a minimum address the requirements for an Accident Prevention Plan (APP), as

contained in Appendix A, EM 385-1-1. The Contractor shall designate in writing a Safety and Health Manager who shall be responsible for the development, implementation and continual oversight of the APP. The APP shall establish, in detail, the protocols necessary for the anticipation, recognition, evaluation, and control of hazards associated with each task to be performed. The APP shall address general safety and health requirements and procedures. The level of detail provided in the APP shall be tailored to the type of work, complexity of operations, and the anticipated hazards to be encountered. Details about some activities may not be available when the initial APP is prepared and submitted. Therefore, the APP shall address, in as much detail as possible, all anticipated tasks, their related hazards and the specific control measures to be instituted.

1.4.2 Acceptance and Modifications

Prior to submittal, the APP shall be signed and dated by the Contractor's designated Safety and Health Manager, Project Manager, and the Site Superintendent. The APP shall be submitted for review at least 10 days prior to the Pre-work Safety Conference. Deficiencies in the APP will be discussed at the Pre-work Safety Conference, and the APP shall be revised to correct the deficiencies and resubmitted for acceptance. Onsite work shall not begin until the plan has been accepted. A copy of the written APP shall be maintained onsite. Once accepted by the Contracting Officer, the Accident Prevention Plan, including Activity Hazard Analyses and all applicable plans, programs and procedures required by the Safety Manual (EM 385-1-1), will be enforced as if an addition to the contract. As work proceeds, the APP shall be adapted to new situations and new conditions. Changes and modifications to the accepted APP shall be made with the knowledge and concurrence of the Safety and Health Manager, the Site Superintendent, and the Contracting Officer. Should any unforeseen hazard become evident during the performance of the work, such hazards shall be brought to the attention of the Safety and Health Manager, the Site Superintendent, and the Contracting Officer, both verbally and in writing, for satisfactory resolution as soon as possible. In the interim, all necessary action shall be taken to re-establish and maintain safe working conditions in order to safeguard onsite personnel, visitors, the public, and the environment. Disregard for the provisions of this specification or the accepted APP shall be cause for stopping of work until the matter has been resolved and rectified to the satisfaction of the Contracting Officer.

1.4.3 Activity Hazard Analysis (AHA)

Activity Hazard Analyses (AHA) for each major phase of work shall be submitted and updated during the project. Each Activity Hazard Analysis shall be prepared and submitted in accordance the requirements and format provided for in EM 385-1-1 (Figure 1-1), and shall be accepted as an Appendix to the project APP. The AHA shall define the activities to be performed for each major phase of work, identify the sequence of work, the specific hazards anticipated, and the control measures to be implemented to eliminate or reduce each hazard to an acceptable level. Work shall not proceed on that phase until the AHA has been accepted and a preparatory meeting has been conducted by the Contractor to discuss its contents with everyone engaged in the activities, including the onsite Government representatives. The Activity Hazard Analyses shall be continuously reviewed and, when appropriate, modified to address changing site conditions or operations.

1.4.4 HAZARD COMMUNICATION PROGRAM

A hazard communication program shall be established and implemented in accordance with 29 CFR 1926, Section .59. Material safety data sheets (MSDSs) shall be provided for all hazardous materials brought onto the worksite. One copy shall be provided to the Contracting Officer and 1 copy shall be included in the Contractor's Hazard Communication Program.

1.4.5 Corps of Engineers Standards

Corps of Engineers Manual EM 385-1-1, referred to in "ACCIDENT PREVENTION" article of Contract Clauses, is hereby supplemented or revised as follows:

1.4.5.1 Conflicts

When a conflict exists between the Corps of Engineers Safety and Health Requirements Manual, other safety requirements, or the contract plans and/or specifications, the most stringent requirement shall prevail, as determined by the Contracting Officer.

1.4.5.2 Front End Loader - Backhoe Machines

a. Non-compliance Safety Check

All front end loader-backhoe machines and other machines, such as tractors that utilize a backhoe attachment, shall be checked for:

(1) Exposed backhoe boom swing foot pedals.

(2) Backhoe boom swing lever which can be reached by a man standing on the ground or on the outrigger support bracket.

b. Correction and Fabrication of Non-compliance Safety Items

Where these conditions exist, guards shall be fabricated to:

(1) Cover over exposed foot pedals to prevent someone from accidentally stepping on them.

(2) Enclose the swing lever so as to preclude operation from the ground or from the outrigger support bracket.

1.4.5.3 Attendance at Safety Meetings

In order to allow for maximum attendance at weekly tool box safety meetings and monthly supervisor safety meetings by Corps of Engineers personnel, the Contractor shall advise the CO's Office, a minimum of 48 hours before the start of each meeting, of the date, time and location of Safety Meetings.

1.4.5.4 Minutes of Safety Meetings

Minutes shall be prepared by the Contractor and forwarded to the Contracting Officer by close of business of the next working day.

1.4.5.5 Protective Footwear

Protective footwear shall be worn by all personnel working on site. Such protective footwear shall be approved by the American National Standards Institute (ANSI), and shall be constructed and tested in accordance with the requirements of ANSI Standard Z41. Footwear providing protection

against impact and compression hazards shall at least be rated as I75 and C75.

1.4.5.6 Head Protection

All construction areas are to be designated as hard hat areas, and shall be identified and appropriately posted as such. All protective headgear (hard hats) shall meet the requirements of ANSI Standard Z89.1. All personnel working in or visiting hard hat areas shall be provided with and required to wear Class A (low voltage electrical protection) or Class B (high voltage electrical protection) protective headgear.

1.4.5.7 Ground Fault Circuit Interrupters (GFCI)

GFCI's are required for work on this contract in accordance with EM 385-1-1. GFCI's are also required when using electric power extension cords.

1.4.5.8 Crawler-, Truck-, and Wheel-Mounted Cranes

Implementation of paragraph 16.D.05 shall include the following:

a. When a crane is performing duty cycle work (such as clamshell, dragline, grapple, or pile driving) it does not require anti-two block equipment. If the crane is required to make a non-duty cycle lift (for example, to lift a piece of equipment, a tool box, or supplies), it will be exempt from the anti-two block equipment requirements if the following procedures are implemented:

(1) an international orange warning device (warning flag, warning tape, or warning ball) is properly secured to the hoist line at a distance of 8 to 10 feet above the hoist rigging;

(2) the signal person (or an individual designated as the signal person) acts as a spotter to alert the crane operator with a "STOP" signal when the warning device approaches the boom tip and the crane operator ceases hoisting functions when alerted of this; and

(3) while the non-duty cycle lift is underway, the signal person shall not stand under the load, shall have no duties other than signal person, and shall comply with the signaling requirements of EM 385-1-1;

b. Anti-two block devices are always required when hoisting personnel by crane or derrick.

1.4.6 Designated First-aid and CPR Trained Attendants

The Contractor shall designate at least 2 persons who are currently trained in first aid and CPR by the American Red Cross or other approved agency for each work shift, and these individuals shall be onsite at all times during site operations. They shall be trained in universal precautions and the use of PPE as described in the Bloodborne Pathogens Standard of 29 CFR 1910, Section .1030 and shall be included in the Contractor's Bloodborne Pathogen Program. These persons may perform other duties but shall be immediately available to render first aid when needed. A copy of each designated person's current valid First Aid and CPR certificate shall be provided.

PART 2 PRODUCTS

PART 3 EXECUTION

-- End of Section --

SECTION 01200

PROJECT MEETINGS
03/00

PART 1 GENERAL

1.1 SUBMITTALS (Not Applicable)

1.2 PRECONSTRUCTION CONFERENCE

1.2.1 Scheduling

After award of the construction contract and prior to the start of any construction work, the Contracting Officer (CO) will schedule and conduct a preconstruction conference. The Contractor's Project Manager, Superintendent and Quality Control System Manager shall attend this meeting. The Contractor is encouraged to have an officer of his company (Project Manager could be this person) and representation from each of his sub-contractors at the conference. This conference will be held at a location and time as specified by the CO.

1.2.2 Purpose

The purpose of this preconstruction conference is to enable the CO to outline the procedures that will be followed by the Government in its administration of this construction contract and to discuss the performance that will be expected from the Contractor. This conference will allow the Contractor an opportunity to ask questions about the Government's supervision and inspection of contract work, about security requirements, regulations, etc. The CO may invite Using Service personnel and any other Government personnel to attend this conference.

1.2.3 Discussion Items

The following is a list of items for discussion during the preconstruction conference. However, the Contracting Officer may include additional items for discussion as conditions and the work require.

a. Authority of the Area/Resident Engineer and organization of the Area/Resident office.

b. Contractor's Progress Schedule.

c. Correspondence Procedures.

d. Contractor Labor Standards Provisions.

e. Contract Modifications and Administrative Procedures.

f. Contractor's Administrative, Laydown and Storage Areas.

g. Procedures for Processing Submittals.

h. Payment Estimate Data and Procedures.

i. Contractor Utilities.

j. Security Requirements and Other Regulations, if applicable.

k. Government Furnished Equipment, if applicable.

l. Disposition of Salvage Property.

m. Contractor Insurance Requirements.

n. Value Engineering Program.

o. Contractor Performance Evaluation.

p. As-Built Drawings.

q. Warranty of Construction and Single Point of Contact.

r. Turnover of Completed Facilities.

1.3 RED-ZONE COMPLETION CONFERENCE

1.3.1 Scheduling

When construction reaches 80% completion, but not less than 60 days prior to the expected completion date, the CO will schedule and conduct a "Red-Zone" completion conference. The contractor's project manager, superintendent and quality control system manager shall attend this meeting. The contractor is encouraged to have an officer of his company (project manager could be this person) at this conference. The conference will be at a location and time as specified by the CO, and will be attended by representatives of this agency.

1.3.2 Purpose and Discussion Items

The purpose of this conference is to plan the completion and closeout of the contract. Topics of discussion will include the following. The CO may include additional items.

a. Completion of remaining construction
b. Remaining administrative items
c. Inspection and transfer procedures
d. Contractor training requirements
e. O&M manuals
f. Systems commissioning
g. Any remaining modifications
h. Warranty procedures
i. Final billing and final payment procedures
j. Any outstanding user issues and/or change requests
k. Any other issues or actions to be resolved prior to closeout

1.4 OTHER MEETINGS

Other meetings may be held after the Preconstruction Conference, and such meetings may include the following:

a. Accident Prevention Safety Plan (Section 01351)

b. Quality Control Plan. (Section 01450)

c. Environmental Protection Plan (Section 01355)

d. Warranty Management Plan (Section 01780)

e. Pre-Warranty Conference (Section 01780)

1.5 FACILITY MEETINGS

The Facility may also schedule meetings with the Contractor through the CO during the progress of construction work.

1.6 MINUTES OF MEETINGS

The Government will prepare minutes of the meeting and will provide the Contractor with a signed original for review and concurrence. The minutes shall include all items discussed at the meeting and the Government will make all corrections provided by the Contractor and resubmit the corrected minutes to the Contractor within seven days.

PART 2 PRODUCTS

PART 3 EXECUTION

-- End of Section --

SECTION 01312

RESIDENT MANAGEMENT SYSTEM (RMS)
05/00

PART 1 GENERAL

1.1 GENERAL

The Government will use the Resident Management System to assist in its monitoring and administration of this contract. The Contractor shall use the Government-furnished Construction Contractor Module, referred to as RMS-QC (QC for Quality Control), to record, maintain, and submit various information throughout the contract period. This joint Government-Contractor use of RMS-W and RMS-QC will facilitate electronic exchange of information and overall management of the contract. RMS-QC provides the means for the Contractor to input, track, and electronically share information with the Government in the following areas:

Administration
Finances
Quality Control
Submittal Monitoring
Scheduling
Import/Export of Data

1.1.1 Correspondence and Electronic Communications

For ease and speed of communications, both Government and Contractor will, to the maximum extent feasible, exchange correspondence and other documents in electronic format. Correspondence, pay requests and other documents comprising the official contract record shall also be provided in paper format, with signatures and dates where necessary. Paper documents will govern, in the event of discrepancy with the electronic version.

1.1.2 Other Factors

Particular attention is directed to Contract Clause, "Schedules for Construction Contracts", Contract Clause, "Payments", Section 01320, "Project Schedule", Section 01330, SUBMITTAL PROCEDURES, and Section 01451, CONTRACTOR QUALITY CONTROL, which have a direct relationship to the reporting to be accomplished through RMS-QC. Also, there is no separate payment for establishing and maintaining the RMS-QC database; all costs associated therewith shall be included in the contract pricing for the work.

1.2 RMS-QC SOFTWARE

RMS-QC is a MSWindows-based program that can be run on a stand-alone personal computer or on a network. The Government will make available the RMS-QC software to the Contractor after award of the construction contract. Prior to the Pre-Construction Conference, the Contractor shall be responsible to download, install and use the latest version of the RMS-QC software from the Government's RMS Internet Website. Upon specific justification and request by the Contractor, the Government can provide RMS-QC on 3-1/2" high-density diskettes or CD-ROM. Any program updates of RMS-QC will be made available to the Contractor via the Government RMS

Website as they become available.

1.3 SYSTEM REQUIREMENTS

The following listed hardware and software is the minimum system configuration that the Contractor shall have to run RMS-QC:

Hardware

IBM-compatible PC with 200 MHz Pentium or higher processor

32+ MB RAM

4 GB hard drive disk space for sole use by the RMS-QC system

3 1/2 inch high-density floppy drive

Compact disk (CD) Reader

Color monitor

Laser printer compatible with HP LaserJet III or better, with minimum 4 MB installed memory.

Connection to the Internet, minimum 28 BPS

Software

Microsoft (MS) Access 97 or newer version database software

MS Windows 95 or newer version operating system (MS Windows NT 4.0 or newer is recommended)

Word Processing software compatible with MS Word 97 or newer

Internet browser

The Contractor's computer system shall be protected by virus protection software that is regularly upgraded with all issued manufacturer's updates throughout the life of the contract.

Electronic mail (E-mail) compatible with MS Outlook

1.4 RELATED INFORMATION

1.4.1 RMS-QC User Guide

After contract award, the Contractor shall download instructions for the installation and use of RMS-QC from the Government RMS Internet Website; the Contractor can obtain the current address from the Government. In case of justifiable difficulties, the Government will provide the Contractor with a CD-ROM containing these instructions.

1.5 CONTRACT DATABASE

Prior to the pre-construction conference, the Government shall provide the Contractor with basic contract award data to use for RMS-QC. The Government will provide data updates to the Contractor as needed, generally by files attached to E-mail. These updates will generally consist of

submittal reviews, correspondence status, QA comments, and other administrative and QA data.

1.6 DATABASE MAINTENANCE

The Contractor shall establish, maintain, and update data for the contract in the RMS-QC database throughout the duration of the contract. The Contractor shall establish and maintain the RMS-QC database at the Contractor's site office. Data updates to the Government shall be submitted by E-mail with file attachments, e.g., daily reports, schedule updates, payment requests. If permitted by the Contracting Officer, a data diskette or CD-ROM may be used instead of E-mail (see Paragraph DATA SUBMISSION VIA COMPUTER DISKETTE OR CD-ROM). The RMS-QC database typically shall include current data on the following items:

1.6.1 Administration

1.6.1.1 Contractor Information

The database shall contain the Contractor's name, address, telephone numbers, management staff, and other required items. Within 14 calendar days of receipt of RMS-QC software from the Government, the Contractor shall deliver Contractor administrative data in electronic format via E-mail.

1.6.1.2 Subcontractor Information

The database shall contain the name, trade, address, phone numbers, and other required information for all subcontractors. A subcontractor must be listed separately for each trade to be performed. Each subcontractor/trade shall be assigned a unique Responsibility Code, provided in RMS-QC. Within 14 calendar days of receipt of RMS-QC software from the Government, the Contractor shall deliver subcontractor administrative data in electronic format via E-mail.

1.6.1.3 Correspondence

All Contractor correspondence to the Government shall be identified with a serial number. Correspondence initiated by the Contractor's site office shall be prefixed with "S". Letters initiated by the Contractor's home (main) office shall be prefixed with "H". Letters shall be numbered starting from 0001. (e.g., H-0001 or S-0001). The Government's letters to the Contractor will be prefixed with "C".

1.6.1.4 Equipment

The Contractor's RMS-QC database shall contain a current list of equipment planned for use or being used on the jobsite, including the most recent and planned equipment inspection dates.

1.6.1.5 Management Reporting

RMS-QC includes a number of reports that Contractor management can use to track the status of the project. The value of these reports is reflective of the quality of the data input, and is maintained in the various sections of RMS-QC. Among these reports are: Progress Payment Request worksheet, QA/QC comments, Submittal Register Status, Three-Phase Inspection checklists.

1.6.2 Finances

1.6.2.1 Pay Activity Data

The RMS-QC database shall include a list of pay activities that the Contractor shall develop in conjunction with the construction schedule. The sum of all pay activities shall be equal to the total contract amount, including modifications. Pay activities shall be grouped by Contract Line Item Number (CLIN), and the sum of the activities shall equal the amount of each CLIN. The total of all CLINs equals the Contract Amount.

1.6.2.2 Payment Requests

All progress payment requests shall be prepared using RMS-QC. The Contractor shall complete the payment request worksheet and include it with the payment request. The work completed under the contract, measured as percent or as specific quantities, shall be updated at least monthly. After the update, the Contractor shall generate a payment request report using RMS-QC. The Contractor shall submit the payment requests with supporting data by E-mail with file attachment(s). If permitted by the Contracting Officer, a data diskette may be used instead of E-mail. A signed paper copy of the approved payment request is also required, which shall govern in the event of discrepancy with the electronic version.

1.6.3 Quality Control (QC)

RMS-QC provides a means to track implementation of the 3-phase QC Control System, prepare daily reports, identify and track deficiencies, document progress of work, and support other contractor QC requirements. The Contractor shall maintain this data on a daily basis. Entered data will automatically output to the RMS-QC generated daily report. The Contractor shall provide the Government a Contractor Quality Control (CQC) Plan within the time required in Section 01451, CONTRACTOR QUALITY CONTROL. Within seven calendar days of Government acceptance, the Contractor shall submit a data diskette or CD-ROM reflecting the information contained in the accepted CQC Plan: schedule, pay activities, features of work, submittal register, QC requirements, and equipment list.

1.6.3.1 Daily Contractor Quality Control (CQC) Reports.

RMS-QC includes the means to produce the Daily CQC Report. The Contractor may use other formats to record basic QC data. However, the Daily CQC Report generated by RMS-QC shall be the Contractor's official report. Data from any supplemental reports by the Contractor shall be summarized and consolidated onto the RMS-QC-generated Daily CQC Report. Daily CQC Reports shall be submitted as required by Section 01451, CONTRACTOR QUALITY CONTROL. Reports shall be submitted electronically to the Government using E-mail or diskette within 24 hours after the date covered by the report. Use of either mode of submittal shall be coordinated with the government representative. The Contractor shall also provide the Government a signed, printed copy of the daily CQC report.

1.6.3.2 Deficiency Tracking.

The Contractor shall use RMS-QC to track deficiencies. Deficiencies identified by the Contractor will be numerically tracked using QC Comments. The contractor shall maintain a current log of its QC comments in the RMS-QC database. The Government will log the deficiencies it has identified using its QA comments. The Government's QA comments will be

included in its export file to the Contractor. The Contractor shall regularly update the correction status of both QC and QA comments.

1.6.3.3 Three-Phase Control Meetings

The Contractor shall maintain scheduled and actual dates and times of preparatory and initial control meetings in RMS-QC.

1.6.3.4 Accident/Safety Tracking.

The Government will issue safety comments, directions, or guidance whenever safety deficiencies are observed. The Government's safety comments will be included in its export file to the Contractor. The Contractor shall regularly update the correction status of the safety comments. In addition, the Contractor shall utilize RMS-QC to advise the Government of any accidents occurring on the jobsite. This brief supplemental entry is not to be considered as a substitute for completion of mandatory reports, e.g., ENG Form 3394 and OSHA Form 200.

1.6.3.5 Features of Work

The Contractor shall include a complete list of the features of work in the RMS-QC database. A feature of work may be associated with multiple pay activities. However, each pay activity (see subparagraph "Pay Activity Data" of paragraph "Finances") will only be linked to a single feature of work.

1.6.3.6 QC Requirements

The Contractor shall develop and maintain a complete list of QC testing, transferred and installed property, and user training requirements in RMS-QC. The Contractor shall update all data on these QC requirements as work progresses, and shall promptly provide this information to the Government via RMS-QC.

1.6.4 Submittal Management

The Government will provide the initial submittal register, ENG Form 4288, SUBMITTAL REGISTER, in electronic format. Thereafter, the Contractor shall maintain a complete list of all submittals, including completion of all data columns as described in Section 01330, SUBMITTAL PROCEDURES. Dates on which submittals are received and returned by the Government will be included in its export file to the Contractor. The Contractor shall use RMS-QC to track and transmit all submittals. ENG Form 4025, submittal transmittal form, and the submittal register update, ENG Form 4288, shall be produced using RMS-QC. RMS will be used to update, store and exchange submittal registers and transmittals, but will not be used for storage of actual submittals.

1.6.5 Schedule

The Contractor shall develop a construction schedule consisting of pay activities, in accordance with Contract Clause "Schedules for Construction Contracts", or Section 01320, PROJECT SCHEDULE, as applicable. This schedule shall be input and maintained in the RMS-QC database either manually or by using the Standard Data Exchange Format (SDEF), see Section 01320 PROJECT SCHEDULE. The updated schedule data shall be included with each pay request submitted by the Contractor.

1.6.6 Import/Export of Data

RMS-QC includes the ability to export Contractor data to the Government and to import submittal register and other Government-provided data, and schedule data using SDEF.

1.7 IMPLEMENTATION

Contractor use of RMS-QC as described in the preceding paragraphs is mandatory. The Contractor shall ensure that sufficient resources are available to maintain its RMS-QC database, and to provide the Government with regular database updates. RMS-QC shall be an integral part of the Contractor's management of quality control.

1.8 DATA SUBMISSION VIA COMPUTER DISKETTE OR CD-ROM

The Government-preferred method for Contractor's submission of updates, payment requests, correspondence and other data is by E-mail with file attachment(s). For locations where this is not feasible, the Contracting Officer may permit use of computer diskettes or CD-ROM for data transfer. Data on the disks or CDs shall be exported using the RMS-QC built-in export function. If used, diskettes and CD-ROMs will be submitted in accordance with the following:

1.8.1 File Medium

The Contractor shall submit required data on 3-1/2" double-sided high-density diskettes formatted to hold 1.44 MB of data. Alternatively, CD-ROMs may be used. They shall conform to industry standards used in the United States. All data shall be provided in English.

1.8.2 Disk or CD-ROM Labels

The Contractor shall affix a permanent exterior label to each diskette and CD-ROM submitted. The label shall indicate in English, the RMS-QC file name, full contract number, project name, project location, data date, name and telephone number of person responsible for the data.

1.8.3 File Names

The Government will provide the file names to be used by the Contractor with the RMS-QC software.

1.9 MONTHLY COORDINATION MEETING

The Contractor shall update the RMS-QC database each workday. At least monthly, the Contractor shall generate and submit an export file to the Government with schedule update and progress payment request. As required in Contract Clause "Payments", at least one week prior to submittal, the contractor shall meet with the Government representative to review the planned progress payment data submission for errors and omissions. The contractor shall make all required corrections prior to Government acceptance of the export file and progress payment request. Payment requests accompanied by incomplete or incorrect data submittals will be returned. The Government will not process progress payments until an acceptable RMS-QC export file is received.

1.10 NOTIFICATION OF NONCOMPLIANCE

The Contracting Officer will notify the Contractor of any detected noncompliance with the requirements of this specification. The Contractor shall take immediate corrective action after receipt of such notice. Such notice, when delivered to the Contractor at the work site, shall be deemed sufficient for the purpose of notification.

PART 2 PRODUCTS

Not used.

PART 3 EXECUTION

Not used.

-- End of Section --

SECTION 01320

PROJECT SCHEDULE
03/2000

PART 1 GENERAL

1.1 REFERENCES

The publications listed below form a part of the specification to the extent referenced. The publications are referenced in the text by basic designation only.

U.S. ARMY CORPS OF ENGINEERS (USACE)

ER 1-1-11	(1995) Progress, Schedules, and Network Analysis Systems

1.2 SUBMITTALS

The following shall be submitted in accordance with Section 01300 SUBMITTAL PROCEDURES:

SD-01 Preconstruction Submittals

Initial Project Schedule; G. Preliminary Project Schedule; G. Periodic Schedule Updates; G.

Two copies of the schedules showing codes, values, categories, numbers, items, etc., as required.

SD-07 Certificates

Qualifications; G

Documentation showing qualifications of personnel preparing schedule reports.

SD-06 Test Reports

Narrative Report; Schedule Reports;

Three copies of the reports showing numbers, descriptions, dates, float, starts, finishes, durations, sequences, etc., as required.

1.3 QUALIFICATIONS

The Contractor shall designate an authorized representative who shall be responsible for the preparation of all required project schedule reports.

PART 2 PRODUCTS (Not Applicable)

PART 3 EXECUTION

3.1 GENERAL REQUIREMENTS

Pursuant to the Contract Clause, SCHEDULE FOR CONSTRUCTION CONTRACTS, a Project Schedule as described below shall be prepared. The scheduling of construction shall be the responsibility of the Contractor. Contractor management personnel shall actively participate in its development. Subcontractors and suppliers working on the project shall also contribute in developing and maintaining an accurate Project Schedule. The approved Project Schedule shall be used to measure the progress of the work, to aid in evaluating time extensions, and to provide the basis of all progress payments.

3.1.1 Standard data exchange format (SDEF)

In collaboration with scheduling software vendors, construction management consultants, professional associations, and other Federal agencies, the U.S. Army Corps of Engineers Construction Engineering Research Laboratories (CERL) has facilitated the development of a Standard Data Exchange Format (SDEF) for scheduling software. This standard uses a 132-character fixed field; an ASCII file to specify the position, length, and definition of all required project planning and control information. Since most scheduling software can already export ASCII data, software vendors can easily revise existing export routines to provide the data in the SDEF. Several software vendors already support SDEF. Project schedule electronic data shall be provided in SDEF as described later in this section. The document "Contractor's Guide to Standard Data Exchange Format" is a general guide to SDEF and is available from the Contracting Officer to the successful bidder.

3.1.2 Resident Management System (RMS)

Scheduling data shall be in SDEF. Scheduling software, capable of producing an SDEF file (standard data exchange format), shall electronically transfer activity data into the Resident Management System (RMS) Contractor Quality Control Module (RMS QC). RMS requirements are further described in Section 01312 "Resident Management System".

3.2 BASIS FOR PAYMENT

The schedule shall be the basis for measuring Contractor progress. Lack of an approved schedule or scheduling personnel will result in an inability of the Contracting Officer to evaluate Contractor's progress for the purposes of payment. Failure of the Contractor to provide all information, as specified below, shall result in the disapproval of the entire Project Schedule submission and the inability of the Contracting Officer to evaluate Contractor progress for payment purposes. In the case where Project Schedule revisions have been directed by the Contracting Officer and those revisions have not been included in the Project Schedule, the Contracting Officer may hold retainage up to the maximum allowed by contract, each payment period, until revisions to the Project Schedule have been made.

3.3 PROJECT SCHEDULE

The computer software system utilized by the Contractor to produce the Project Schedule shall be capable of providing all requirements of this specification. Failure of the Contractor to meet the requirements of this specification shall result in the disapproval of the schedule. Manual methods used to produce any required information shall require approval by

the Contracting Officer.

3.3.1 Use of the Critical Path Method

The Critical Path Method (CPM) of network calculation shall be used to generate the Project Schedule. The Contractor shall provide the Project Schedule in the Precedence Diagram Method (PDM).

3.3.2 Level of Detail Required

The Project Schedule shall include an appropriate level of detail. Failure to develop or update the Project Schedule or provide data to the Contracting Officer at the appropriate level of detail, as specified by the Contracting Officer, shall result in the disapproval of the schedule. The Contracting Officer will use, but is not limited to, the following conditions to determine the appropriate level of detail to be used in the Project Schedule:

3.3.2.1 Activity Durations

Contractor submissions shall follow the direction of the Contracting Officer regarding reasonable activity durations. Reasonable durations are those that allow the progress of activities to be accurately determined between payment periods (usually less than 2 percent of all non-procurement activities' Original Durations are greater than 20 days).

3.3.2.2 Procurement Activities

Tasks related to the procurement of long lead materials or equipment shall be included as separate activities in the project schedule. Long lead materials and equipment are those materials that have a procurement cycle of over 90 days. Examples of procurement process activities include, but are not limited to: submittals, approvals, procurement, fabrication, and delivery.

3.3.2.3 Government Activities

Government and other agency activities that could impact progress shall be shown. These activities include, but are not limited to: approvals, inspections, utility tie-in, Government Furnished Equipment (GFE) and Notice to Proceed (NTP) for phasing requirements.

3.3.2.4 Responsibility

All activities shall be identified in the project schedule by the party responsible to perform the work. Responsibility includes, but is not limited to, the subcontracting firm, contractor work force, or government agency performing a given task. Activities shall not belong to more than one responsible party. The responsible party for each activity shall be identified by the Responsibility Code. The responsibility codes used must be coordinated with those used in RMS.

3.3.2.5 Work Areas

For projects with separate work areas, all activities shall be identified in the project schedule by the work area in which the activity occurs. Activities shall not be allowed to cover more than one work area. The work area of each activity shall be identified by the Work Area Code.

3.3.2.6 Modification or Claim Number

Any activity that is added or changed by contract modification or used to justify claimed time shall be identified by a mod or claim code that changed the activity. Activities shall not belong to more than one modification or claim item. The modification or claim number of each activity shall be identified by the Mod or Claim Number. Whenever possible, changes shall be added to the schedule by adding new activities. Existing activities shall not normally be changed to reflect modifications.

3.3.2.7 Bid Item

All activities shall be identified in the project schedule by the Bid Item to which the activity belongs. An activity shall not contain work in more than one bid item. The bid item for each appropriate activity shall be identified by the Bid Item Code. The Bid Item Numbers used in the schedule must exactly match those in the RMS data disk provided by the Contracting Officer.

3.3.2.8 Phase of Work

For projects with separate phases of construction, all activities shall be identified in the project schedule by the phases of work in which the activity occurs. Activities shall not contain work in more than one phase of work. The project phase of each activity shall be by the unique Phase of Work Code.

3.3.2.9 Category of Work

All Activities shall be identified in the project schedule according to the category of work which best describes the activity. The category of work for each activity shall be identified by the Category of Work Code. The category of work codes must be coordinated with those used by RMS.

3.3.2.10 Feature of Work

All activities shall be identified in the project schedule according to the feature of work to which the activity belongs. Feature of work refers, but is not limited to, a work breakdown structure for the project. The feature of work for each activity shall be identified by the Feature of Work Code. Whenever possible, the feature of work title shall match those in RMS. Other features may be added if those in RMS do not adequately describe the work.

3.3.3 Scheduled Project Completion

The schedule interval shall extend from NTP to the contract completion date.

3.3.3.1 Project Start Date

The schedule shall start no earlier than the date on which the NTP was acknowledged. The Contractor shall include as the first activity in the project schedule an activity called "Start Project". The "Start Project" activity shall have an "ES" constraint date equal to the date that the NTP was acknowledged, and a zero day duration.

3.3.3.2 Constraint of Last Activity

Completion of the last activity in the schedule shall be constrained by the

contract completion date. Calculation on project updates shall be such that if the early finish of the last activity falls after the contract completion date, then the float calculation shall reflect a negative float on the critical path. The Contractor shall include as the last activity in the project schedule an activity called "End Project". The "End Project" activity shall have an "LF" constraint date equal to the completion date for the project, and a zero day duration.

3.3.3.3 Early Project Completion

In the event the project schedule shows completion of the project prior to the contract completion date, the Contractor shall identify those activities that have been accelerated and/or those activities that are scheduled in parallel to support the Contractor's "early" completion. Contractor shall specifically address each of the activities noted in the narrative report at every project schedule update period to assist the Contracting Officer in evaluating the Contractor's ability to actually complete prior to the contract period.

3.3.4 Interim Completion Dates

Contractually specified interim completion dates shall also be constrained to show negative float if the early finish date of the last activity in that phase falls after the interim completion date.

3.3.4.1 Start Phase

The Contractor shall include as the first activity for a project phase an activity called "Start Phase X" where "X" refers to the phase of work. The "Start Phase X" activity shall have an "ES" constraint date equal to the date on which the NTP was acknowledged, and a zero day duration.

3.3.4.2 End Phase

The Contractor shall include as the last activity in a project phase an activity called "End Phase X" where "X" refers to the phase of work. The "End Phase X" activity shall have an "LF" constraint date equal to the completion date for the project, and a zero day duration.

3.3.4.3 Phase X

The Contractor shall include a hammock type activity for each project phase called "Phase X" where "X" refers to the phase of work. The "Phase X" activity shall be logically tied to the earliest and latest activities in the phase.

3.3.5 Default Progress Data Disallowed

Actual Start and Finish dates shall not be automatically updated by default mechanisms that may be included in CPM scheduling software systems. Actual Start and Finish dates on the CPM schedule shall match those dates provided from those dates logged in RMS QC. Failure of the Contractor to document the Actual Start and Finish dates on the in RMS QC for every in-progress or completed activity, and failure to ensure that the data contained on the in RMS QC is the sole basis for schedule updating shall result in the disapproval of the Contractor's schedule and the inability of the Contracting Officer to evaluate Contractor progress for payment purposes. Updating of the percent complete and the remaining duration of any activity shall be independent functions. Program features which calculate one of

these parameters from the other shall be disabled.

3.3.6 Out-of-Sequence Progress

Activities that have posted progress without all preceding logic being satisfied (Out-of-Sequence Progress) will generally not be allowed Any work performed out-of-sequence shall be corrected with appropriate changes to the schedule logic.

3.3.7 Negative Lags

Lag durations contained in the project schedule shall not have a negative value.

3.4 PROJECT SCHEDULE SUBMISSIONS

The Contractor shall provide the submissions as described below. The data disk, reports, and network diagrams required for each submission are contained in paragraph SUBMISSION REQUIREMENTS.

3.4.1 Preliminary Project Schedule Submission

The Preliminary Project Schedule, defining the Contractor's planned operations for the first 90 calendar days shall be submitted for approval within 15 calendar days after the NTP is acknowledged. The approved preliminary schedule shall be used for payment purposes not to exceed 90 calendar days after NTP. The Preliminary Project Schedule shall be prepared in the contractor's NAS scheduling software system and include subcontractor codes, features of work, and pay activities for the contractor's planned operations during the first 90 calendar days.

3.4.2 Initial Project Schedule Submission

The Initial Project Schedule shall be submitted for approval within 45 calendar days after NTP. The schedule shall provide a reasonable sequence of activities which represent work through the entire project and shall be at a reasonable level of detail.

3.4.3 Periodic Schedule Updates

Based on the result of progress meetings, specified in "Periodic Progress Meetings," the Contractor shall submit periodic schedule updates on a monthly basis. In addition, schedule updates shall be made at the midway point between each monthly update indicating actual progress for the previous two (2) weeks and planned work for the next six (6) weeks. These submissions shall enable the Contracting Officer to assess Contractor's progress. If the Contractor fails or refuses to furnish the information and project schedule data, which in the judgement of the Contracting Officer or authorized representative is necessary for verifying the Contractor's progress, the Contractor shall be deemed not to have provided an estimate upon which progress payment may be made.

3.4.4 Standard Activity Coding Dictionary

The Contractor shall use the activity coding structure defined in the Standard Data Exchange Format (SDEF) in ER 1-1-11, Appendix A. This exact structure is mandatory, even if some fields are not used. All codes must be carefully coordinated with those used in RMS.

3.5 SUBMISSION REQUIREMENTS

The following items shall be submitted by the Contractor for the preliminary submission, initial submission, and every periodic project schedule update throughout the life of the project:

3.5.1 Data Disks

One data disk containing the project schedule shall be provided. Data on the disks shall adhere to the SDEF format specified in ER 1-1-11, Appendix A. Data disks required from RMS QC shall be provided in addition to this disk.

3.5.1.1 File Medium

Required data shall be submitted on 3.5 disks, or CDRom, unless otherwise approved by the Contracting Officer.

3.5.1.2 Disk Label

A permanent exterior label shall be affixed to each disk submitted. The label shall indicate the type of schedule (Preliminary, Initial, Update, or Change), full contract number, project name, project location, data date, name and telephone number or person responsible for the schedule, and the MS-DOS version used to format the disk.

3.5.1.3 File Name

Each file submitted shall have a name related to either the schedule data date, project name, or contract number. The Contractor shall develop a naming convention that will ensure that the names of the files submitted are unique. The Contractor shall submit the file naming convention to the Contracting Officer for approval.

3.5.2 Narrative Report

A Narrative Report shall be provided with the preliminary, initial, and each update of the project schedule. This report shall be provided as the basis of the Contractor's progress payment request. The Narrative Report shall include: a description of activities along the 2 most critical paths, a description of current and anticipated problem areas or delaying factors and their impact, and an explanation of corrective actions taken or required to be taken. The narrative report is expected to relay to the Government, the Contractor's thorough analysis of the schedule output and its plans to compensate for any problems, either current or potential, which are revealed through that analysis.

3.5.3 Approved Changes Verification

Only project schedule changes that have been previously approved by the Contracting Officer shall be included in the schedule submission. The Narrative Report shall specifically reference, on an activity by activity basis, all changes made since the previous period and relate each change to documented, approved schedule changes.

3.5.4 Schedule Reports

The format for each activity for the schedule reports listed below shall contain: Activity Numbers, Activity Description, Original Duration,

Remaining Duration, Early Start Date, Early Finish Date, Late Start Date, Late Finish Date, Total Float. Actual Start and Actual Finish Dates shall be printed for those activities in progress or completed.

3.5.4.1 Activity Report

A list of all activities sorted according to activity number.

3.5.4.2 Logic Report

A list of Preceding and Succeeding activities for every activity in ascending order by activity number. Preceeding and succeeding activities shall include all information listed above in paragraph Schedule Reports. A blank line shall be left between each activity grouping.

3.5.4.3 Total Float Report

A list of all incomplete activities sorted in ascending order of total float. Activities which have the same amount of total float shall be listed in ascending order of Early Start Dates. Completed activities shall not be shown on this report.

3.5.4.4 Earnings Report

A compilation of the Contractor's Total Earnings on the project from the NTP until the most recent Monthly Progress Meeting. This report shall reflect the Earnings of specific activities based on the agreements made in the field and approved between the Contractor and Contracting Officer at the most recent Monthly Progress Meeting. Provided that the Contractor has provided a complete schedule update, this report shall serve as the basis of determining Contractor Payment. Activities shall be grouped by bid item and sorted by activity numbers. This report shall: sum all activities in a bid item and provide a bid item percent; and complete and sum all bid items to provide a total project percent complete. The printed report shall contain, for each activity: the Activity Number, Activity Description, Original Budgeted Amount, Total Quantity, Quantity to Date, Percent Complete (based on cost), and Earnings to Date. Reports from RMS QC, containing the information described above, may be provided in lieu of this report.

3.5.5 Network Diagram

The network diagram shall be required on the initial schedule submission and on monthly schedule update submissions. The network diagram shall depict and display the order and interdependence of activities and the sequence in which the work is to be accomplished from the issuance of notice to proceed to final acceptance. This shall include any partially completed work and future work to be accomplished. The Contracting Officer will use, but is not limited to, the following conditions to review compliance with this paragraph:

3.5.5.1 Continuous Flow

Diagrams shall show a continuous flow from left to right with no arrows from right to left. The activity number, description, duration, and estimated earned value shall be shown on the diagram.

3.5.5.2 Project Milestone Dates

Dates shall be shown on the diagram for start of project, any contract required interim completion dates, and contract completion dates.

3.5.5.3 Critical Path

The critical path shall be clearly shown.

3.5.5.4 Banding

Activities shall be grouped to assist in the understanding of the activity sequence. Typically, this flow will group activities by category of work, work area and/or responsibility.

3.5.5.5 S-Curves

Earnings curves showing projected early and late earnings and earnings to date.

3.6 PERIODIC PROGRESS MEETINGS

Progress meetings to discuss the project schedule shall include a monthly onsite meeting or other regular more frequent intervals mutually agreed to at the preconstruction conference. During this meeting the Contractor shall describe, on an activity by activity basis, all proposed revisions and adjustments to the project schedule required to reflect the current status of the project. The Contracting Officer will approve activity progress, proposed revisions, and adjustments as appropriate.

3.6.1 Meeting Attendance

The Contractor's Project Manager and Scheduler shall attend the regular progress meeting.

3.6.2 Update Submission Following Progress Meeting

A complete update of the project schedule containing all approved progress, revisions, and adjustments, based on the regular progress meeting, shall be submitted not later than 4 working days after the monthly progress meeting.

3.6.3 Progress Meeting Contents

Update information, included below, shall be subject to the approval of the Contracting Officer. As a minimum, the Contractor shall address the following items on an activity by activity basis during each progress meeting.

3.6.3.1 Start and Finish Dates

The Actual Start and Actual Finish dates for each activity currently in-progress or completed.

3.6.3.2 Time Completion

The estimated Remaining Duration for each activity in-progress. Time-based progress calculations shall be based on Remaining Duration for each activity.

3.6.3.3 Cost Completion

The earnings for each activity started. Payment will be based on earnings for each in-progress or completed activity. Payment for individual activities will not be made for work that contains quality defects. A portion of the overall project amount may be retained based on delays of activities.

3.6.3.4 Logic Changes

All logic changes pertaining to NTP on change orders, change orders to be incorporated into the schedule, contractor proposed changes in work sequence, corrections to schedule logic for out-of-sequence progress, lag durations, and other changes that have been made pursuant to contract provisions shall be specifically identified and discussed.

3.6.3.5 Other Changes

Other changes required due to delays in completion of any activity or group of activities include: 1) delays beyond the Contractor's control, such as strikes and unusual weather. 2) delays encountered due to submittals, Government Activities, deliveries or work stoppages which make re-planning the work necessary. 3) Changes required to correct a schedule which does not represent the actual or planned prosecution and progress of the work.

3.7 REQUESTS FOR TIME EXTENSIONS

In the event the Contractor requests an extension of the contract completion date, or any interim milestone date, the Contractor shall furnish the following for a determination as to whether or not the Contractor is entitled to an extension of time under the provisions of the contract: justification, project schedule data, and supporting evidence as the Contracting Officer may deem necessary. Submission of proof of delay, based on revised activity logic, duration, and costs (updated to the specific date that the delay occurred) is obligatory to any approvals.

3.7.1 Justification of Delay

The project schedule shall clearly display that the Contractor has used, in full, all the float time available for the work involved with this request. The Contracting Officer's determination as to the number of allowable days of contract extension shall be based upon the project schedule updates in effect for the time period in question, and other factual information. Actual delays that are found to be caused by the Contractor's own actions, which result in the extension of the schedule, will not be a cause for a time extension to the contract completion date.

3.7.2 Submission Requirements

The Contractor shall submit a justification for each request for a change in the contract completion date of under 2 weeks based upon the most recent schedule update at the time of the NTP or constructive direction issued for the change. Such a request shall be in accordance with the requirements of other appropriate Contract Clauses and shall include, as a minimum:

a. A list of affected activities, with their associated project schedule activity number.

b. A brief explanation of the causes of the change.

c. An analysis of the overall impact of the changes proposed.

d. A sub-network of the affected area.

Activities impacted in each justification for change shall be identified by a unique activity code contained in the required data file.

3.7.3 Additional Submission Requirements

For any requested time extension of over 2 weeks, the Contracting Officer may request an interim update with revised activities for a specific change request. The Contractor shall provide this disk within 4 days of the Contracting Officer's request.

3.8 DIRECTED CHANGES

If the NTP is issued for changes prior to settlement of price and/or time, the Contractor shall submit proposed schedule revisions to the Contracting Officer within 2 weeks of the NTP being issued. The proposed revisions to the schedule will be approved by the Contracting Officer prior to inclusion of those changes within the project schedule. If the Contractor fails to submit the proposed revisions, the Contracting Officer may furnish the Contractor with suggested revisions to the project schedule. The Contractor shall include these revisions in the project schedule until revisions are submitted, and final changes and impacts have been negotiated. If the Contractor has any objections to the revisions furnished by the Contracting Officer, the Contractor shall advise the Contracting Officer within 2 weeks of receipt of the revisions. Regardless of the objections, the Contractor shall continue to update the schedule with the Contracting Officer's revisions until a mutual agreement in the revisions is reached. If the Contractor fails to submit alternative revisions within 2 weeks of receipt of the Contracting Officer's proposed revisions, the Contractor will be deemed to have concurred with the Contracting Officer's proposed revisions. The proposed revisions will then be the basis for an equitable adjustment for performance of the work.

3.9 OWNERSHIP OF FLOAT

Float available in the schedule, at any time, shall not be considered for the exclusive use of either the Government or the Contractor.

-- End of Section --

SUBMITTAL REGISTER

CONTRACT NO.

TITLE AND LOCATION
F-22 FLIGHT KITCHEN, LAFB, VA

CONTRACTOR

ACTIVITY NO	TRANSMITTAL NO	SPEC SECT	DESCRIPTION ITEM SUBMITTED	PARAGRAPH #	CLASSIFICATION	GOVT OR A/E REVWR	CONTRACTOR: SCHEDULE DATES			CONTRACTOR ACTION		DATE FWD TO APPR AUTH/ DATE RCD FROM CONTR	APPROVING AUTHORITY				MAILED TO CONTR/ DATE RCD FRM APPR AUTH	REMARKS
							SUBMIT	APPROVAL NEEDED BY	MATERIAL NEEDED BY	ACTION CODE	DATE OF ACTION		DATE FWD TO OTHER REVIEWER	DATE RCD FROM OTH REVIEWER	ACTION CODE	DATE OF ACTION		
(a)	(b)	(c)	(d)	(e)	(f)		(g)	(h)	(i)	(j)	(k)	(l)	(m)	(n)	(o)	(p)	(q)	(r)
		01111	SD-01 Preconstruction Submittals															
			Accident Prevention Plan (APP)	1.4.1	G													
			SD-07 Certificates															
			Designated first-aid and CPR	1.4.6	G													
			trained attendants															
		01320	SD-01 Preconstruction Submittals															
			Initial Project Schedule	3.4.2	G													
			Preliminary Project Schedule	3.4.1	G													
			Periodic Schedule Updates	3.4.3	G													
			SD-07 Certificates															
			Qualifications	1.3	G													
			SD-06 Test Reports															
			Narrative Report	3.5.2														
			Schedule Reports	3.5.4														
		01330	SD-01 Preconstruction Submittals															
			Submittal register	1.5.1	G													
		01355	SD-01 Preconstruction Submittals															
			Environmental Protection Plan	1.7	G													
		01356	SD-07 Certificates															
			Mill Certificate or Affidavit	2.1.3														
		01572	SD-01 Preconstruction Submittals															
			Waste Management Plan	1.4	G													
		01780	SD-11 Closeout Submittals															
			As-Built Drawings	1.2.1	G													
			As-Built Record of Equipment and	1.2.2	G													
			Materials															

SUBMITTAL REGISTER

CONTRACT NO.

TITLE AND LOCATION
F-22 FLIGHT KITCHEN, LAFB, VA

CONTRACTOR

ACTIVITY NO	TRANSMITTAL NO	SPEC SECT	DESCRIPTION ITEM SUBMITTED	PARAG # RAPH	CLASSIFICATION	GOVT OR A/E REVWR	CONTRACTOR: SCHEDULE DATES			CONTRACTOR ACTION			APPROVING AUTHORITY					
							SUBMIT	APPROVAL NEEDED BY	MATERIAL NEEDED BY	ACTION CODE	DATE OF ACTION	DATE FWD TO APPR AUTH/ DATE RCD FROM CONTR	DATE FWD TO OTHER REVIEWER	DATE RCD FROM OTH REVIEWER	ACTION CODE	DATE OF ACTION	MAILED TO CONTR/ DATE RCD FRM APPR AUTH	REMARKS
(a)	(b)	(c)	(d)	(e)	(f)		(g)	(h)	(i)	(j)	(k)	(l)	(m)	(n)	(o)	(p)	(q)	(r)
		01780	Final Approved Shop Drawings	1.2.3	G													
			Construction Contract	1.2.4	G													
			Specifications															
			Real Property Equipment	1.2.5	G													
			Warranty Management Plan	1.3.1	G													
			Warranty Tags	1.3.5														
			Final Clean-Up	1.6	G													
		01781	SD-11 Closeout Submittals															
			Final O&M Manuals	1.3	G													
		02220	SD-03 Product Data															
			Work Plan	1.4	G													
		02230	SD-03 Product Data															
			Materials Other Than Salable	3.4.1														
			Timber															
		02300	SD-03 Product Data															
			Selection of Borrow Material	3.3	G													
			Utilization of Excavated Material	1.6	G													
			SD-06 Test Reports															
			Testing	3.12	G													
			SD-07 Certificates															
			Testing	3.12	G													
		02315	SD-06 Test Reports															
			Testing	3.14	G													
		02316	SD-06 Test Reports															
			Field Density Tests	3.4.3	G													
			Testing of Backfill Materials	3.4.2	G													

SUBMITTAL REGISTER

CONTRACT NO.

TITLE AND LOCATION
F-22 FLIGHT KITCHEN, LAFB, VA

CONTRACTOR

ACTIVITY NO	TRANSMITTAL NO	SPEC SECT	DESCRIPTION ITEM SUBMITTED	PARAGRAPH #	CLASSIFICATION	GOVT OR A/E REVWR	CONTRACTOR: SCHEDULE DATES			CONTRACTOR ACTION			APPROVING AUTHORITY					
							SUBMIT	APPROVAL NEEDED BY	MATERIAL NEEDED BY	ACTION CODE	DATE OF ACTION	DATE FWD TO APPR AUTH/ DATE RCD FROM CONTR	DATE FWD TO OTHER REVIEWER	DATE RCD FROM OTH REVIEWER	ACTION CODE	DATE OF ACTION	MAILED TO CONTR/ DATE RCD FRM APPR AUTH	REMARKS
(a)	(b)	(c)	(d)	(e)	(f)		(g)	(h)	(i)	(j)	(k)	(l)	(m)	(n)	(o)	(p)	(q)	(r)
		02364	SD-03 Product Data															
			Termiticide Treatment	3.4	G													
			Termiticides	2.1	G													
			Foundation Exterior	3.2.3														
			Utilities and Vents	3.2.4														
			Crawl and Plenum Air Spaces	3.2.5														
			Verification of Measurement	3.5														
			Application Equipment	3.4.1														
			SD-04 Samples															
			Termiticides	2.1														
			SD-06 Test Reports															
			Equipment Calibration and Tank	3.4.1														
			Measurement															
			Soil Moisture	3.3.1														
			SD-07 Certificates															
			Qualifications	1.2	G													
		02510	SD-03 Product Data															
			Installation	3.1														
			Waste Water Disposal Method	3.2.5														
			SD-06 Test Reports															
			Bacteriological Disinfection	3.3	G													
			Bacteriological Disinfection	3.3.1	G													
			SD-07 Certificates															
			Installation	3.1														
			Meters	2.8.8														
		02531	SD-07 Certificates															

SUBMITTAL REGISTER

CONTRACT NO.

TITLE AND LOCATION
F-22 FLIGHT KITCHEN, LAFB, VA

CONTRACTOR

ACTIVITY NO	TRANSMITTAL NO	SPEC SECT	DESCRIPTION ITEM SUBMITTED	PARAG # RAPH	CLASSIFICATION	GOVT OR A/E REVWR	CONTRACTOR: SCHEDULE DATES			CONTRACTOR ACTION			APPROVING AUTHORITY					
							SUBMIT	APPROVAL NEEDED BY	MATERIAL NEEDED BY	ACTION CODE	DATE OF ACTION	DATE FWD TO APPR AUTH/ DATE RCD FROM CONTR	DATE FWD TO OTHER REVIEWER	DATE RCD FROM OTH REVIEWER	ACTION CODE	DATE OF ACTION	MAILED TO CONTR/ DATE RCD FRM APPR AUTH	REMARKS
(a)	(b)	(c)	(d)	(e)	(f)		(g)	(h)	(i)	(j)	(k)	(l)	(m)	(n)	(o)	(p)	(q)	(r)
		02531	Portland Cement	2.7.1														
			Joints	2.3														
		02532	SD-06 Test Reports															
			Hydrostatic Tests	3.2														
		02630	SD-03 Product Data															
			Placing Pipe	3.3														
			SD-04 Samples															
			Pipe for Culverts and Storm	2.1														
			Drains															
			SD-07 Certificates															
			Resin Certification	2.1.2														
			Pipeline Testing	3.8														
			Hydrostatic Test on Watertight	2.7														
			Joints															
			Determination of Density	3.7.5														
			Frame and Cover for Gratings	2.3.4	G													
		02722	SD-03 Product Data															
			Plant, Equipment, and Tools	1.6														
			SD-06 Test Reports															
			Sampling and testing	1.4														
			Field Density Tests	1.4.2.4	G													
		02741	SD-03 Product Data															
			Mix Design	2.3	G													
			Contractor Quality Control	3.10	G													
			Material Acceptance	3.11	G													
			SD-04 Samples															

SUBMITTAL REGISTER

CONTRACT NO.

TITLE AND LOCATION
F-22 FLIGHT KITCHEN, LAFB, VA

CONTRACTOR

ACTIVITY NO	TRANSMITTAL NO	SPEC SECT	DESCRIPTION ITEM SUBMITTED	PARAG # RAPH	CLASSIFICATION	GOVT OR A/E REVWR	CONTRACTOR: SCHEDULE DATES			CONTRACTOR ACTION			APPROVING AUTHORITY					
							SUBMIT	APPROVAL NEEDED BY	MATERIAL NEEDED BY	ACTION CODE	DATE OF ACTION	DATE FWD TO APPR AUTH/ DATE RCD FROM CONTR	DATE FWD TO OTHER REVIEWER	DATE RCD FROM OTH REVIEWER	ACTION CODE	DATE OF ACTION	MAILED TO CONTR/ DATE RCD FRM APPR AUTH	REMARKS
(a)	(b)	(c)	(d)	(e)	(f)		(g)	(h)	(i)	(j)	(k)	(l)	(m)	(n)	(o)	(p)	(q)	(r)
		02741	Asphalt Cement Binder	2.2	G													
			Aggregates	2.1	G													
			SD-06 Test Reports															
			Aggregates	2.1	G													
			QC Monitoring	3.10.3.10	G													
			SD-07 Certificates															
			Asphalt Cement Binder	2.2	G													
			Testing Laboratory	3.6	G													
		02748	SD-06 Test Reports															
			Sampling and Testing	3.7														
		02754	SD-03 Product Data															
			Equipment	1.6														
			Paving	3.4	G													
			Mixture Proportions	2.11	G													
		02760	SD-03 Product Data															
			Manufacturer's Recommendations	3.3.3														
			Equipment	1.4														
			SD-04 Samples															
			Products	Part 2	G													
		02763	SD-03 Product Data															
			Equipment	1.4														
			Composition Requirements	2.2.1														
			SD-06 Test Reports															
			Sampling and Testing	2.5														
			SD-07 Certificates															

SUBMITTAL REGISTER

CONTRACT NO.

TITLE AND LOCATION
F-22 FLIGHT KITCHEN, LAFB, VA

CONTRACTOR

ACTIVITY NO	TRANSMITTAL NO	SPEC SECT	DESCRIPTION ITEM SUBMITTED	PARAGRAPH #	CLASSIFICATION	GOVT OR A/E REVWR	CONTRACTOR: SCHEDULE DATES			CONTRACTOR ACTION			APPROVING AUTHORITY					
							SUBMIT	APPROVAL NEEDED BY	MATERIAL NEEDED BY	ACTION CODE	DATE OF ACTION	DATE FWD TO APPR AUTH/ DATE RCD FROM CONTR	DATE FWD TO OTHER REVIEWER	DATE RCD FROM OTH REVIEWER	ACTION CODE	DATE OF ACTION	MAILED TO CONTR/ DATE RCD FRM APPR AUTH	REMARKS
(a)	(b)	(c)	(d)	(e)	(f)		(g)	(h)	(i)	(j)	(k)	(l)	(m)	(n)	(o)	(p)	(q)	(r)
		02763	Volatile Organic Compound	2.2.3														
			(VOC)															
		02770	SD-03 Product Data															
			Concrete	2.1														
			SD-06 Test Reports															
			Field Quality Control	3.8														
		02800	SD-02 Shop Drawings															
			Ornamental fence system and	2.1	G													
			components															
			SD-03 Product Data															
			Ornamental Fence System and	2.1	G													
			Components															
			SD-04 Samples															
			Finish	2.3	G													
		02811	SD-02 Shop Drawings															
			Design Analysis, Calculations,	1.6.1	G													
			and Spare Parts															
			Construction Drawings	1.6.2	G													
			Record and As-built Drawings	1.6.3	G													
			SD-07 Certificates															
			Supplier's Statement	1.8	G													
			SD-10 Operation and Maintenance															
			Data															
			Maintenance Manuals	1.9	G													
		02821	SD-07 Certificates															
			Chain Link Fence	2.1.1														

SUBMITTAL REGISTER

CONTRACT NO.

TITLE AND LOCATION
F-22 FLIGHT KITCHEN, LAFB, VA

CONTRACTOR

ACTIVITY NO	TRANSMITTAL NO	SPEC SECT	DESCRIPTION ITEM SUBMITTED	PARAGRAPH #	CLASSIFICATION	GOVT OR A/E REVWR	CONTRACTOR: SCHEDULE DATES			CONTRACTOR ACTION			APPROVING AUTHORITY					MAILED TO CONTR/ DATE RCD FRM APPR AUTH	REMARKS
							SUBMIT	APPROVAL NEEDED BY	MATERIAL NEEDED BY	ACTION CODE	DATE OF ACTION	DATE FWD TO APPR AUTH/ DATE RCD FROM CONTR	DATE FWD TO OTHER REVIEWER	DATE RCD FROM OTH REVIEWER	ACTION CODE	DATE OF ACTION		
(a)	(b)	(c)	(d)	(e)	(f)		(g)	(h)	(i)	(j)	(k)	(l)	(m)	(n)	(o)	(p)	(q)	(r)
		02922	SD-03 Product Data															
			Equipment	3.1.3														
			Chemical Treatment Material	1.4.3.2														
			Delivery	1.4.1														
			Finished Grade and Topsoil	3.2.1														
			Topsoil	2.2														
			Quantity Check	3.5														
			Sod Establishment Period	3.9														
			Maintenance Record	3.9.3.5														
			Application of Pesticide	3.6	G													
			SD-04 Samples															
			Delivered Topsoil	1.4.1.2														
			Soil Amendments	2.3														
			SD-06 Test Reports															
			Equipment Calibration	3.1.3														
			Soil Test	3.1.4														
			SD-07 Certificates															
			Sod	2.1														
			Topsoil	2.2														
			pH Adjuster	2.3.1														
			Fertilizer	2.3.2														
			Organic Material	2.3.4														
			Soil Conditioner	2.3.5														
			Pesticide	2.5	G													
		03100	SD-02 Shop Drawings															
			Formwork	3.1.1														

SUBMITTAL REGISTER

CONTRACT NO.

TITLE AND LOCATION
F-22 FLIGHT KITCHEN, LAFB, VA

CONTRACTOR

ACTIVITY NO	TRANSMITTAL NO	SPEC SECT	DESCRIPTION ITEM SUBMITTED	PARAGRAPH #	CLASSIFICATION	GOVT OR A/E REVWR	CONTRACTOR: SCHEDULE DATES			CONTRACTOR ACTION			APPROVING AUTHORITY					
							SUBMIT	APPROVAL NEEDED BY	MATERIAL NEEDED BY	ACTION CODE	DATE OF ACTION	DATE FWD TO APPR AUTH/ DATE RCD FROM CONTR	DATE FWD TO OTHER REVIEWER	DATE RCD FROM OTH REVIEWER	ACTION CODE	DATE OF ACTION	MAILED TO CONTR/ DATE RCD FRM APPR AUTH	REMARKS
(a)	(b)	(c)	(d)	(e)	(f)		(g)	(h)	(i)	(j)	(k)	(l)	(m)	(n)	(o)	(p)	(q)	(r)
		03100	SD-03 Product Data															
			Design	1.3														
			Form Materials	2.1														
			Form Releasing Agents	2.1.5														
		03150	SD-02 Shop Drawings															
			Waterstops	2.4														
			SD-03 Product Data															
			Preformed Expansion Joint Filler	2.2														
			Sealant	2.3														
			Waterstops	2.4														
			SD-07 Certificates															
			Preformed Expansion Joint Filler	2.2														
			Sealant	2.3														
			Waterstops	2.4														
		03200	SD-02 Shop Drawings															
			Reinforcement	3.1	G													
			SD-07 Certificates															
			Reinforcing Steel	2.3	G													
		03300	SD-03 Product Data															
			Mixture Proportions	1.7	G													
			SD-06 Test Reports															
			Testing and Inspection for	3.14	G													
			Contractor Quality Control															
			SD-07 Certificates															
			Qualifications	1.5														
		04200	SD-02 Shop Drawings															

SUBMITTAL REGISTER

CONTRACT NO.

TITLE AND LOCATION
F-22 FLIGHT KITCHEN, LAFB, VA

CONTRACTOR

ACTIVITY NO	TRANSMITTAL NO	SPEC SECT	DESCRIPTION ITEM SUBMITTED	PARAG # RAPH	CLASSIFICATION	GOVT OR A/E REVWR	CONTRACTOR: SCHEDULE DATES			CONTRACTOR ACTION			APPROVING AUTHORITY					
							SUBMIT	APPROVAL NEEDED BY	MATERIAL NEEDED BY	ACTION CODE	DATE OF ACTION	DATE FWD TO APPR AUTH/ DATE RCD FROM CONTR	DATE FWD TO OTHER REVIEWER	DATE RCD FROM OTH REVIEWER	ACTION CODE	DATE OF ACTION	MAILED TO CONTR/ DATE RCD FRM APPR AUTH	REMARKS
(a)	(b)	(c)	(d)	(e)	(f)		(g)	(h)	(i)	(j)	(k)	(l)	(m)	(n)	(o)	(p)	(q)	(r)
		04200	Masonry Work	3.1.1	G													
			SD-03 Product Data															
			Cold Weather Installation	3.1.2														
			SD-04 Samples															
			Concrete Masonry Units (CMU)	2.3														
			Anchors, Ties, and Bar	2.7														
			Positioners															
			Expansion-Joint Materials	2.11														
			Joint Reinforcement	2.8	G													
			SD-06 Test Reports															
			Efflorescence Test	3.17.3	G													
			Field Testing of Mortar	3.17.1	G													
			Field Testing of Grout	3.17.2	G													
			Prism tests	3.17.4	G													
			Masonry Cement	2.5	G													
			SD-07 Certificates															
			Concrete Masonry Units (CMU)	2.3														
			Control Joint Keys	2.10														
			Anchors, Ties, and Bar	2.7														
			Positioners															
			Joint Reinforcement	2.8														
			Reinforcing Steel Bars and Rods	2.9														
			Masonry Cement	2.5														
			Precast Concrete Items	3.11.2														
			Mortar Admixtures	2.5.1														
			Grout Admixtures	2.6.1														

SUBMITTAL REGISTER

CONTRACT NO.

TITLE AND LOCATION
F-22 FLIGHT KITCHEN, LAFB, VA

CONTRACTOR

ACTIVITY NO	TRANSMITTAL NO	SPEC SECT	DESCRIPTION ITEM SUBMITTED	PARAG # RAPH	CLASSIFICATION	GOVT OR A/E REVWR	CONTRACTOR: SCHEDULE DATES			CONTRACTOR ACTION			APPROVING AUTHORITY					
							SUBMIT	APPROVAL NEEDED BY	MATERIAL NEEDED BY	ACTION CODE	DATE OF ACTION	DATE FWD TO APPR AUTH/ DATE RCD FROM CONTR	DATE FWD TO OTHER REVIEWER	DATE RCD FROM OTH REVIEWER	ACTION CODE	DATE OF ACTION	MAILED TO CONTR/ DATE RCD FRM APPR AUTH	REMARKS
(a)	(b)	(c)	(d)	(e)	(f)		(g)	(h)	(i)	(j)	(k)	(l)	(m)	(n)	(o)	(p)	(q)	(r)
		04220	SD-02 Shop Drawings															
			Detail Drawings	3.1	G													
			SD-04 Samples															
			Expansion Joint Materials	3.11														
			Clay or Shale Brick (Face Brick)	2.1.1	G													
			Sample Panel	1.3	G													
			Sample Panel	3.1	G													
			SD-06 Test Reports															
			Masonry Veneer/Steel Stud Wall	3.1	G													
			System															
			SD-07 Certificates															
			Clay or Shale Brick (Face Brick)	2.1.1														
			Joint Reinforcement	2.4														
			Expansion Joint Materials	3.11														
			Insulation	2.6														
			Exterior Sheathing	2.8														
			Moisture Barrier	2.9.1														
			Vapor Retarder	2.9.2														
			Veneer Anchors	2.10														
			Welding	2.11.2														
		04720	SD-02 Shop Drawings															
			Shop Drawings	3.2	G													
			SD-04 Samples															
			Samples	3.2	G													
		05090	SD-03 Product Data															
			Welding Procedure Qualifications	1.5	G													

SUBMITTAL REGISTER

CONTRACT NO.

TITLE AND LOCATION
F-22 FLIGHT KITCHEN, LAFB, VA

CONTRACTOR

ACTIVITY NO	TRANSMITTAL NO	SPEC SECT	DESCRIPTION ITEM SUBMITTED	PARAGRAPH #	CLASSIFICATION	GOVT OR A/E REVWR	CONTRACTOR: SCHEDULE DATES			CONTRACTOR ACTION			APPROVING AUTHORITY					
							SUBMIT	APPROVAL NEEDED BY	MATERIAL NEEDED BY	ACTION CODE	DATE OF ACTION	DATE FWD TO APPR AUTH/ DATE RCD FROM CONTR	DATE FWD TO OTHER REVIEWER	DATE RCD FROM OTH REVIEWER	ACTION CODE	DATE OF ACTION	MAILED TO CONTR/ DATE RCD FRM APPR AUTH	REMARKS
(a)	(b)	(c)	(d)	(e)	(f)		(g)	(h)	(i)	(j)	(k)	(l)	(m)	(n)	(o)	(p)	(q)	(r)
		05090	Welder, Welding Operator, and	1.6	G													
			Tacker Qualification															
			Inspector Qualification	1.7	G													
			Previous Qualifications	1.5.1														
			Prequalified Procedures	1.5.2														
			SD-06 Test Reports															
			Quality Control	3.2	G													
		05120	SD-02 Shop Drawings															
			Structural Steel	2.1	G													
			Structural Connections	3.2.1	G													
			SD-03 Product Data															
			Erection	3.2	G													
			Welding	3.3	G													
			SD-07 Certificates															
			Mill Test Reports	1.4														
			Welder Qualifications	1.6	G													
			Welding Inspector	1.7	G													
			Fabrication	3.1	G													
		05210	SD-02 Shop Drawings															
			Steel Joists	1.3	G													
			SD-07 Certificates															
			Steel Joists	1.3	G													
		05300	SD-02 Shop Drawings															
			Deck Units	2.1	G													
			Accessories	2.5	G													
			Attachments	3.2	G													

SUBMITTAL REGISTER

CONTRACT NO.

TITLE AND LOCATION
F-22 FLIGHT KITCHEN, LAFB, VA

CONTRACTOR

ACTIVITY NO	TRANSMITTAL NO	SPEC SECT	DESCRIPTION ITEM SUBMITTED	PARAG # RAPH	CLASSIFICATION	GOVT OR A/E REVWR	CONTRACTOR: SCHEDULE DATES			CONTRACTOR ACTION			APPROVING AUTHORITY					
							SUBMIT	APPROVAL NEEDED BY	MATERIAL NEEDED BY	ACTION CODE	DATE OF ACTION	DATE FWD TO APPR AUTH/ DATE RCD FROM CONTR	DATE FWD TO OTHER REVIEWER	DATE RCD FROM OTH REVIEWER	ACTION CODE	DATE OF ACTION	MAILED TO CONTR/ DATE RCD FRM APPR AUTH	REMARKS
(a)	(b)	(c)	(d)	(e)	(f)		(g)	(h)	(i)	(j)	(k)	(l)	(m)	(n)	(o)	(p)	(q)	(r)
		05300	Holes and Openings	3.3	G													
			SD-03 Product Data															
			Deck Units	2.1	G													
			Attachments	3.2	G													
			SD-07 Certificates															
			Deck Units	2.1	G													
		05400	SD-02 Shop Drawings															
			Framing Components	2.1	G													
			SD-07 Certificates															
			Mill Certificates	2.2	G													
			Welds	3.2.1														
		05500	SD-02 Shop Drawings															
			Miscellaneous Metal Items	1.6	G													
		06100	SD-02 Shop Drawings															
			Blocking, Nailers and Nailing	3.3.1														
			Strips															
			SD-07 Certificates															
			Grading and Marking	2.1.1														
			Insulation	2.3														
		06410	SD-02 Shop Drawings															
			Shop Drawings	1.7	G													
			Installation	3.1	G													
			SD-03 Product Data															
			Wood Materials	2.1	G													
			Wood Finishes	2.6	G													
			Finish Schedule	2.8.8.3	G													

SUBMITTAL REGISTER

CONTRACT NO.

TITLE AND LOCATION
F-22 FLIGHT KITCHEN, LAFB, VA

CONTRACTOR

ACTIVITY NO	TRANSMITTAL NO	SPEC SECT	DESCRIPTION ITEM SUBMITTED	PARAGRAPH #	CLASSIFICATION	GOVT OR A/E REVWR	CONTRACTOR: SCHEDULE DATES			CONTRACTOR ACTION			APPROVING AUTHORITY					
							SUBMIT	APPROVAL NEEDED BY	MATERIAL NEEDED BY	ACTION CODE	DATE OF ACTION	DATE FWD TO APPR AUTH/ DATE RCD FROM CONTR	DATE FWD TO OTHER REVIEWER	DATE RCD FROM OTH REVIEWER	ACTION CODE	DATE OF ACTION	MAILED TO CONTR/ DATE RCD FRM APPR AUTH	REMARKS
(a)	(b)	(c)	(d)	(e)	(f)		(g)	(h)	(i)	(j)	(k)	(l)	(m)	(n)	(o)	(p)	(q)	(r)
		06410	SD-04 Samples															
			Plastic Laminates	2.2	G													
			Cabinet Hardware	2.3	G													
			SD-07 Certificates															
			Quality Assurance	1.4														
			Laminate Clad Casework	2.6														
			Laminate Clad Casework	3.1														
		07220	SD-03 Product Data															
			Application of Insulation	3.5	G													
			SD-07 Certificates															
			Insulation	2.1	G													
		07412	SD-02 Shop Drawings															
			Metal Roofing	1.7.1	G													
			SD-04 Samples															
			Accessories	2.2	G													
			Roof Panels	2.1	G													
			Fasteners and Subpurlins		G													
			Gaskets and Insulating	2.10	G													
			Compounds															
			Sealant	2.9	G													
			SD-07 Certificates															
			Roof Panels	2.1	G													
			Installation	3.1	G													
			Accessories	2.2	G													
			Insulation	2.8	G													
			Installer	1.3.3	G													

SUBMITTAL REGISTER

CONTRACT NO.

TITLE AND LOCATION
F-22 FLIGHT KITCHEN, LAFB, VA

CONTRACTOR

ACTIVITY NO	TRANSMITTAL NO	SPEC SECT	DESCRIPTION ITEM SUBMITTED	PARAGRAPH #	CLASSIFICATION	GOVT OR A/E REVWR	CONTRACTOR: SCHEDULE DATES			CONTRACTOR ACTION			APPROVING AUTHORITY					MAILED TO CONTR/ DATE RCD FRM APPR AUTH	REMARKS
							SUBMIT	APPROVAL NEEDED BY	MATERIAL NEEDED BY	ACTION CODE	DATE OF ACTION	DATE FWD TO APPR AUTH/ DATE RCD FROM CONTR	DATE FWD TO OTHER REVIEWER	DATE RCD FROM OTH REVIEWER	ACTION CODE	DATE OF ACTION		
(a)	(b)	(c)	(d)	(e)	(f)		(g)	(h)	(i)	(j)	(k)	(l)	(m)	(n)	(o)	(p)	(q)	(r)
		07412	Warranties	1.7	G													
		07413	SD-02 Shop Drawings															
			Soffit and wall panels	2.1	G													
			SD-04 Samples															
			Color Samples	2.2	G													
			Accessories	2.3	G													
			Soffit and wall panels	2.1	G													
			Fasteners	2.4	G													
			Wall Panels	2.1.1	G													
			SD-07 Certificates															
			Soffit and wall panels	2.1	G													
			Installation	3.1														
			Accessories	2.3														
		07510	SD-03 Product Data															
			Inspection	3.17	G													
			Warranty	1.5	G													
			Roof Information Card	3.18	G													
			SD-07 Certificates															
			Bitumen	2.1														
			Felt	2.4														
			Cants	2.3														
		07600	SD-02 Shop Drawings															
			Materials	2.1														
		07840	SD-02 Shop Drawings															
			Firestopping Materials	2.1														
			SD-07 Certificates															

SUBMITTAL REGISTER

CONTRACT NO.

TITLE AND LOCATION
F-22 FLIGHT KITCHEN, LAFB, VA

CONTRACTOR

ACTIVITY NO	TRANSMITTAL NO	SPEC SECT	DESCRIPTION ITEM SUBMITTED	PARAG # RAPH	CLASSIFICATION	GOVT OR A/E REVWR	CONTRACTOR: SCHEDULE DATES			CONTRACTOR ACTION		DATE FWD TO APPR AUTH/ DATE RCD FROM CONTR	APPROVING AUTHORITY				MAILED TO CONTR/ DATE RCD FRM APPR AUTH	REMARKS
							SUBMIT	APPROVAL NEEDED BY	MATERIAL NEEDED BY	ACTION CODE	DATE OF ACTION		DATE FWD TO OTHER REVIEWER	DATE RCD FROM OTH REVIEWER	ACTION CODE	DATE OF ACTION		
(a)	(b)	(c)	(d)	(e)	(f)		(g)	(h)	(i)	(j)	(k)	(l)	(m)	(n)	(o)	(p)	(q)	(r)
		07840	Firestopping Materials	2.1														
			Installer Qualifications	1.5														
			Inspection	3.3	G													
		07900	SD-03 Product Data															
			Backing	2.1														
			Bond-Breaker	2.2														
			Sealant	2.4														
			SD-07 Certificates															
			Sealant	2.4														
		08110	SD-02 Shop Drawings															
			Doors	2.1	G	G												
			Doors	2.1	G	G												
			Frames	2.5	G	G												
			Frames	2.5	G	G												
			Accessories	2.3														
			SD-03 Product Data															
			Doors	2.1	G													
			Frames	2.5	G													
			Accessories	2.3														
		08120	SD-02 Shop Drawings															
			Doors, storefronts, windows,	2.1	G	G												
			sidelights and frames															
			SD-08 Manufacturer's Instructions															
			Doors, windows and frames	2.2.3														
		08710	SD-02 Shop Drawings															
			Hardware schedule	1.3	G													

SUBMITTAL REGISTER

CONTRACT NO.

TITLE AND LOCATION
F-22 FLIGHT KITCHEN, LAFB, VA

CONTRACTOR

ACTIVITY NO	TRANSMITTAL NO	SPEC SECT	DESCRIPTION ITEM SUBMITTED	PARAG # RAPH	CLASSIFICATION	GOVT OR A/E REVWR	CONTRACTOR: SCHEDULE DATES			CONTRACTOR ACTION			APPROVING AUTHORITY					
							SUBMIT	APPROVAL NEEDED BY	MATERIAL NEEDED BY	ACTION CODE	DATE OF ACTION	DATE FWD TO APPR AUTH/ DATE RCD FROM CONTR	DATE FWD TO OTHER REVIEWER	DATE RCD FROM OTH REVIEWER	ACTION CODE	DATE OF ACTION	MAILED TO CONTR/ DATE RCD FRM APPR AUTH	REMARKS
(a)	(b)	(c)	(d)	(e)	(f)		(g)	(h)	(i)	(j)	(k)	(l)	(m)	(n)	(o)	(p)	(q)	(r)
		08710	Keying system	2.3.7	G													
			SD-03 Product Data															
			Hardware items	2.3	G													
			SD-08 Manufacturer’s Instructions															
			Installation	3.1														
			SD-10 Operation and Maintenance															
			Data															
			Hardware Schedule	1.3	G													
			SD-11 Closeout Submittals															
			Key bitting	1.4	G													
		08810	SD-02 Shop Drawings															
			Installation	3.2														
			SD-03 Product Data															
			Insulating Glass	2.1														
			Glazing Accessories	2.4														
			SD-04 Samples															
			Glass Mirrors	2.3.1														
			Insulating Glass	2.1														
			Tempered Glass	2.2.1														
			SD-07 Certificates															
			Insulating Glass	2.1														
		09250	SD-02 Shop Drawings															
			Steel Framing	3.1														
			Control Joints	3.2.6														
			Fire-Resistant Assemblies	3.6														
			SD-07 Certificates															

SUBMITTAL REGISTER

CONTRACT NO.

TITLE AND LOCATION
F-22 FLIGHT KITCHEN, LAFB, VA

CONTRACTOR

ACTIVITY NO	TRANSMITTAL NO	SPEC SECT	DESCRIPTION ITEM SUBMITTED	PARAG # RAPH	CLASSIFICATION	GOVT OR A/E REVWR	CONTRACTOR: SCHEDULE DATES			CONTRACTOR ACTION			APPROVING AUTHORITY					
							SUBMIT	APPROVAL NEEDED BY	MATERIAL NEEDED BY	ACTION CODE	DATE OF ACTION	DATE FWD TO APPR AUTH/ DATE RCD FROM CONTR	DATE FWD TO OTHER REVIEWER	DATE RCD FROM OTH REVIEWER	ACTION CODE	DATE OF ACTION	MAILED TO CONTR/ DATE RCD FRM APPR AUTH	REMARKS
(a)	(b)	(c)	(d)	(e)	(f)		(g)	(h)	(i)	(j)	(k)	(l)	(m)	(n)	(o)	(p)	(q)	(r)
		09250	Gypsum Board	2.3														
			Cementitious Backer Units	2.3.4														
			Cementitious Backer Units	3.3.1														
			Water-Resistant Gypsum Board	3.3.1														
			Steel Framing	3.1														
			Fire-Rated Gypsum Board	2.3.3														
		09310	SD-03 Product Data															
			Tile	2.1														
			Setting-Bed	2.2														
			Mortar, Grout, and Adhesive	2.4														
			SD-04 Samples															
			Tile	2.1	G													
			Accessories	3.2	G													
			SD-07 Certificates															
			Tile	2.1														
			Mortar, Grout, and Adhesive	2.4														
		09510	SD-02 Shop Drawings															
			Approved Detail Drawings	1.3	G													
			SD-03 Product Data															
			Acoustical Ceiling Systems	1.7														
			SD-04 Samples															
			Acoustical Units	2.1	G													
			SD-07 Certificates															
			Acoustical Units	2.1														
		09650	SD-03 Product Data															
			Resilient Base	3.4														

SUBMITTAL REGISTER

CONTRACT NO.

TITLE AND LOCATION
F-22 FLIGHT KITCHEN, LAFB, VA

CONTRACTOR

ACTIVITY NO	TRANSMITTAL NO	SPEC SECT	DESCRIPTION ITEM SUBMITTED	PARAGRAPH #	CLASSIFICATION	GOVT OR A/E REVWR	CONTRACTOR: SCHEDULE DATES			CONTRACTOR ACTION			APPROVING AUTHORITY					MAILED TO CONTR/ DATE RCD FRM APPR AUTH	REMARKS
							SUBMIT	APPROVAL NEEDED BY	MATERIAL NEEDED BY	ACTION CODE	DATE OF ACTION	DATE FWD TO APPR AUTH/ DATE RCD FROM CONTR	DATE FWD TO OTHER REVIEWER	DATE RCD FROM OTH REVIEWER	ACTION CODE	DATE OF ACTION		
(a)	(b)	(c)	(d)	(e)	(f)		(g)	(h)	(i)	(j)	(k)	(l)	(m)	(n)	(o)	(p)	(q)	(r)
		09650	SD-04 Samples															
			Resilient Base	3.4	G													
		09720	SD-03 Product Data															
			Wallcoverings	2.1	G													
			Manufacturer's Instructions	3.3.1														
			Installation	3.3														
			Maintenance	1.6														
			Clean-Up	3.4														
			SD-04 Samples															
			Wallcoverings	2.1	G													
			SD-07 Certificates															
			Wallcoverings	2.1														
		09771	SD-02 Shop Drawings															
			Approved Detail Drawings	3.3	G													
			SD-03 Product Data															
			Fiberglass Reinforced Plastic	1.3														
			(FRP) Panels															
			SD-04 Samples															
			Fiberglass Reinforced Plastic	1.3	G													
			(FRP) Panels															
		09900	SD-02 Shop Drawings															
			Piping identification	3.8														
			stencil	3.8														
			SD-03 Product Data															
			Coating	2.1														

SUBMITTAL REGISTER

CONTRACT NO.

TITLE AND LOCATION
F-22 FLIGHT KITCHEN, LAFB, VA

CONTRACTOR

ACTIVITY NO	TRANSMITTAL NO	SPEC SECT	DESCRIPTION ITEM SUBMITTED	PARAG # RAPH	CLASSIFICATION	GOVT OR A/E REVWR	CONTRACTOR: SCHEDULE DATES			CONTRACTOR ACTION			APPROVING AUTHORITY					
							SUBMIT	APPROVAL NEEDED BY	MATERIAL NEEDED BY	ACTION CODE	DATE OF ACTION	DATE FWD TO APPR AUTH/ DATE RCD FROM CONTR	DATE FWD TO OTHER REVIEWER	DATE RCD FROM OTH REVIEWER	ACTION CODE	DATE OF ACTION	MAILED TO CONTR/ DATE RCD FRM APPR AUTH	REMARKS
(a)	(b)	(c)	(d)	(e)	(f)		(g)	(h)	(i)	(j)	(k)	(l)	(m)	(n)	(o)	(p)	(q)	(r)
		09900	Manufacturer's Technical Data	2.1														
			Sheets															
			SD-04 Samples															
			Color	1.9	G													
			SD-07 Certificates															
			Applicator's qualifications	1.3														
			Qualification Testing	1.10.4.1														
			SD-08 Manufacturer’s Instructions															
			Application instructions	3.6.1														
			Mixing	3.6.2														
			Manufacturer's Material Safety	1.7.2														
			Data Sheets															
			SD-10 Operation and Maintenance															
			Data															
			Coatings:	2.1	G													
		10160	SD-02 Shop Drawings															
			Approved Detail Drawings	1.3	G													
			SD-03 Product Data															
			Toilet Partition System	1.3	G													
			SD-04 Samples															
			Toilet Partition System	1.3	G													
		10200	SD-03 Product Data															
			Louvers and Frames	2.1	G													
		10430	SD-02 Shop Drawings															
			Approved Detail Drawings	3.1	G													
			SD-03 Product Data															

SUBMITTAL REGISTER

CONTRACT NO.

TITLE AND LOCATION
F-22 FLIGHT KITCHEN, LAFB, VA

CONTRACTOR

ACTIVITY NO	TRANSMITTAL NO	SPEC SECT	DESCRIPTION ITEM SUBMITTED	PARAGRAPH #	CLASSIFICATION	GOVT OR A/E REVWR	CONTRACTOR: SCHEDULE DATES			CONTRACTOR ACTION			APPROVING AUTHORITY					
							SUBMIT	APPROVAL NEEDED BY	MATERIAL NEEDED BY	ACTION CODE	DATE OF ACTION	DATE FWD TO APPR AUTH/ DATE RCD FROM CONTR	DATE FWD TO OTHER REVIEWER	DATE RCD FROM OTH REVIEWER	ACTION CODE	DATE OF ACTION	MAILED TO CONTR/ DATE RCD FRM APPR AUTH	REMARKS
(a)	(b)	(c)	(d)	(e)	(f)		(g)	(h)	(i)	(j)	(k)	(l)	(m)	(n)	(o)	(p)	(q)	(r)
		10430	Individual Letter/Number Signs	2.1	G													
			Installation	3.1	G													
			SD-04 Samples															
			Individual Letter/Number Signs	2.1														
		10440	SD-02 Shop Drawings															
			Detail Drawings	3.1	G													
			SD-03 Product Data															
			Installation	3.1														
			SD-04 Samples															
			Interior Signage	1.2														
		10505	SD-02 Shop Drawings															
			Types	3.1														
			Location	3.1														
			Installation	3.1														
			Numbering system	2.3.2														
			SD-03 Product Data															
			Material	2.2														
			Finish	2.4.2														
			components	3.1														
			Assembly instructions	3.1														
			SD-04 Samples															
			Color chips	1.5.1	G													
		10522	SD-02 Shop Drawings															
			Cabinets	2.1	G													
		10800	SD-03 Product Data															
			Finishes	2.1.2														

SUBMITTAL REGISTER

CONTRACT NO.

TITLE AND LOCATION
F-22 FLIGHT KITCHEN, LAFB, VA

CONTRACTOR

ACTIVITY NO	TRANSMITTAL NO	SPEC SECT	DESCRIPTION ITEM SUBMITTED	PARAGRAPH #	CLASSIFICATION	GOVT OR A/E REVWR	CONTRACTOR: SCHEDULE DATES			CONTRACTOR ACTION			APPROVING AUTHORITY					MAILED TO CONTR/ DATE RCD FRM APPR AUTH	REMARKS
							SUBMIT	APPROVAL NEEDED BY	MATERIAL NEEDED BY	ACTION CODE	DATE OF ACTION	DATE FWD TO APPR AUTH/ DATE RCD FROM CONTR	DATE FWD TO OTHER REVIEWER	DATE RCD FROM OTH REVIEWER	ACTION CODE	DATE OF ACTION		
(a)	(b)	(c)	(d)	(e)	(f)		(g)	(h)	(i)	(j)	(k)	(l)	(m)	(n)	(o)	(p)	(q)	(r)
		10800	Accessory Items	2.2														
			SD-04 Samples															
			Finishes	2.1.2														
			Accessory Items	2.2														
		11310	SD-02 Shop Drawings															
			Equipment Installation	3.1	G													
			SD-03 Product Data															
			Site Sanitary Lift Station	1.3	G	G												
			Requirements															
			Site Sanitary Lift Station	1.3	G	G												
			Requirements															
			Site Sanitary Lift Station	1.3	G	G												
			Requirements															
			SD-06 Test Reports															
			Field Testing and Adjusting	3.3	G													
			Equipment															
			SD-10 Operation and Maintenance															
			Data															
			Site Sanitary Lift Station	1.3	G													
			Requirements															
		11400	SD-02 Shop Drawings															
			Food Service Equipment	2.1.6	G													
			Installation	3.1	G													
			SD-03 Product Data															
			Food Service Equipment	2.1.6	G													

SUBMITTAL REGISTER

CONTRACT NO.

TITLE AND LOCATION
F-22 FLIGHT KITCHEN, LAFB, VA

CONTRACTOR

ACTIVITY NO	TRANSMITTAL NO	SPEC SECT	DESCRIPTION ITEM SUBMITTED	PARAGRAPH #	CLASSIFICATION	GOVT OR A/E REVWR	CONTRACTOR: SCHEDULE DATES			CONTRACTOR ACTION			APPROVING AUTHORITY					
							SUBMIT	APPROVAL NEEDED BY	MATERIAL NEEDED BY	ACTION CODE	DATE OF ACTION	DATE FWD TO APPR AUTH/ DATE RCD FROM CONTR	DATE FWD TO OTHER REVIEWER	DATE RCD FROM OTH REVIEWER	ACTION CODE	DATE OF ACTION	MAILED TO CONTR/ DATE RCD FRM APPR AUTH	REMARKS
(a)	(b)	(c)	(d)	(e)	(f)		(g)	(h)	(i)	(j)	(k)	(l)	(m)	(n)	(o)	(p)	(q)	(r)
		11400	SD-10 Operation and Maintenance															
			Data															
			Food Service Equipment	2.1.6	G													
		12490	SD-02 Shop Drawings															
			Approved Detail Drawings	3.1	G													
			SD-03 Product Data															
			Window Treatments	3.1	G													
			Hardware	1.3														
			SD-04 Samples															
			Window Treatments	3.1														
		13080	SD-02 Shop Drawings															
			Bracing	3.1	G													
			SD-03 Product Data															
			Bracing	3.1	G													
		13110	SD-02 Shop Drawings															
			Drawings	1.3.9	G													
			Contractor's Modifications	1.3.2	G													
			SD-03 Product Data															
			Equipment	1.3.10	G													
			Spare Parts	3.9	G													
			SD-06 Test Reports															
			Tests and Measurements	3.5	G													
			Contractor's Modifications	1.3.2	G													
			SD-07 Certificates															
			Cathodic Protection System	1.3	G													
			Services of 'Corrosion Expert'	1.3.1	G													

SUBMITTAL REGISTER

CONTRACT NO.

TITLE AND LOCATION
F-22 FLIGHT KITCHEN, LAFB, VA

CONTRACTOR

ACTIVITY NO	TRANSMITTAL NO	SPEC SECT	DESCRIPTION ITEM SUBMITTED	PARAG # RAPH	CLASSIFICATION	GOVT OR A/E REVWR	CONTRACTOR: SCHEDULE DATES			CONTRACTOR ACTION			APPROVING AUTHORITY					MAILED TO CONTR/ DATE RCD FRM APPR AUTH	REMARKS
							SUBMIT	APPROVAL NEEDED BY	MATERIAL NEEDED BY	ACTION CODE	DATE OF ACTION	DATE FWD TO APPR AUTH/ DATE RCD FROM CONTR	DATE FWD TO OTHER REVIEWER	DATE RCD FROM OTH REVIEWER	ACTION CODE	DATE OF ACTION			
(a)	(b)	(c)	(d)	(e)	(f)		(g)	(h)	(i)	(j)	(k)	(l)	(m)	(n)	(o)	(p)	(q)	(r)
		13110	SD-10 Operation and Maintenance																
			Data																
			Cathodic Protection System	1.3	G														
			Training Course	3.6	G														
		13930	SD-02 Shop Drawings																
			Sprinkler System Shop Drawings	2.10	G														
			SD-03 Product Data																
			Load Calculations for Sizing Sway	2.10	G														
			Bracing																
			Components and Equipment Data	2.10	G														
			Hydraulic Calculations	1.7	G														
			Spare Parts	2.10	G														
			Preliminary Tests	3.9	G														
			Final Acceptance Test Procedures	2.10	G														
			Final Acceptance Test	2.10	G														
			Fire Protection Specialist	1.8	G														
			Sprinkler System Installer	1.9	G														
			Qualifications																
			SD-06 Test Reports																
			Final Acceptance Test Report	2.10	G														
			SD-07 Certificates																
			Fire Protection Specialist	3.3	G	G													
			Inspection																
		15070	SD-02 Shop Drawings																
			Bracing	3.1	G														
			Contractor Designed Bracing	1.2.3	G														

SUBMITTAL REGISTER

CONTRACT NO.

TITLE AND LOCATION
F-22 FLIGHT KITCHEN, LAFB, VA

CONTRACTOR

ACTIVITY NO	TRANSMITTAL NO	SPEC SECT	DESCRIPTION ITEM SUBMITTED	PARAG # RAPH	CLASSIFICATION	GOVT OR A/E REVWR	CONTRACTOR: SCHEDULE DATES			CONTRACTOR ACTION			APPROVING AUTHORITY					
							SUBMIT	APPROVAL NEEDED BY	MATERIAL NEEDED BY	ACTION CODE	DATE OF ACTION	DATE FWD TO APPR AUTH/ DATE RCD FROM CONTR	DATE FWD TO OTHER REVIEWER	DATE RCD FROM OTH REVIEWER	ACTION CODE	DATE OF ACTION	MAILED TO CONTR/ DATE RCD FRM APPR AUTH	REMARKS
(a)	(b)	(c)	(d)	(e)	(f)		(g)	(h)	(i)	(j)	(k)	(l)	(m)	(n)	(o)	(p)	(q)	(r)
		15070	SD-03 Product Data															
			Bracing	3.1	G													
			Contractor Designed Bracing	1.2.3	G													
		15080	SD-04 Samples															
			Pipe Insulation Materials	2.2	G													
			Duct Insulation Materials	2.3	G													
			Equipment Insulation Materials	2.4	G													
		15182	SD-02 Shop Drawings															
			Refrigerant Piping System	2.3	G													
			SD-03 Product Data															
			Refrigerant Piping System	2.3	G													
			Spare Parts	2.9	G	A/E												
			Refrigerant Piping Tests	3.3	G													
			SD-06 Test Reports															
			Refrigerant Piping Tests	3.3	G	G												
		15190	SD-02 Shop Drawings															
			Gas Piping System	3.2	G													
			SD-03 Product Data															
			Qualifications	1.2.1	G													
			SD-06 Test Reports															
			Pressure Tests	3.15.1														
		15400	SD-02 Shop Drawings															
			Plumbing System	3.8.1	G													
			SD-03 Product Data															
			Welding	1.5.1	G													
			Plumbing Fixture Schedule	3.9	G													

SUBMITTAL REGISTER

CONTRACT NO.

TITLE AND LOCATION
F-22 FLIGHT KITCHEN, LAFB, VA

CONTRACTOR

ACTIVITY NO	TRANSMITTAL NO	SPEC SECT	DESCRIPTION ITEM SUBMITTED	PARAGRAPH #	CLASSIFICATION	GOVT OR A/E REVWR	CONTRACTOR: SCHEDULE DATES			CONTRACTOR ACTION			APPROVING AUTHORITY					
							SUBMIT	APPROVAL NEEDED BY	MATERIAL NEEDED BY	ACTION CODE	DATE OF ACTION	DATE FWD TO APPR AUTH/ DATE RCD FROM CONTR	DATE FWD TO OTHER REVIEWER	DATE RCD FROM OTH REVIEWER	ACTION CODE	DATE OF ACTION	MAILED TO CONTR/ DATE RCD FRM APPR AUTH	REMARKS
(a)	(b)	(c)	(d)	(e)	(f)		(g)	(h)	(i)	(j)	(k)	(l)	(m)	(n)	(o)	(p)	(q)	(r)
		15400	Vibration-Absorbing Features	3.4	G													
			Plumbing System	3.8.1	G													
			SD-06 Test Reports															
			Tests, Flushing and Disinfection	3.8	G													
			Backflow Prevention Assembly	3.8.1.1	G													
			Tests															
			SD-07 Certificates															
			Materials and Equipment	2.1														
			Bolts	2.1.1														
			SD-10 Operation and Maintenance															
			Data															
			OPERATION AND	3.12														
			MAINTENANCE DATA															
		15700	SD-02 Shop Drawings															
			Drawings	1.5.2	G													
			SD-03 Product Data															
			Unitary Equipment	2.4	G													
			Spare Parts Data	2.12	G													
			Verification of Dimensions	1.5.1														
			System Performance Tests	3.4	G													
			Demonstrations	3.5	G													
			SD-06 Test Reports															
			Refrigerant Tests, Charging, and	3.3	G													
			Start-Up															
			System Performance Tests	3.4	G													
			SD-07 Certificates															

SUBMITTAL REGISTER

CONTRACT NO.

TITLE AND LOCATION
F-22 FLIGHT KITCHEN, LAFB, VA

CONTRACTOR

ACTIVITY NO	TRANSMITTAL NO	SPEC SECT	DESCRIPTION ITEM SUBMITTED	PARAG # RAPH	CLASSIFICATION	GOVT OR A/E REVWR	CONTRACTOR: SCHEDULE DATES SUBMIT	APPROVAL NEEDED BY	MATERIAL NEEDED BY	CONTRACTOR ACTION ACTION CODE	DATE OF ACTION	DATE FWD TO APPR AUTH/ DATE RCD FROM CONTR	APPROVING AUTHORITY DATE FWD TO OTHER REVIEWER	DATE RCD FROM OTH REVIEWER	ACTION CODE	DATE OF ACTION	MAILED TO CONTR/ DATE RCD FRM APPR AUTH	REMARKS
(a)	(b)	(c)	(d)	(e)	(f)		(g)	(h)	(i)	(j)	(k)	(l)	(m)	(n)	(o)	(p)	(q)	(r)
		15700	Unitary Equipment	2.4	G													
		15768	SD-02 Shop Drawings															
			Heater installation drawing	3.1	G													
			SD-03 Product Data															
			Electric unit heaters	2.1	G													
			Thermostat	2.1.5	G	G												
		15895	SD-02 Shop Drawings															
			Drawings	3.1.6	G													
			Installation	3.1	G													
			SD-03 Product Data															
			Components and Equipment	2.1	G													
			Test Procedures	3.5	G													
			Similar Services	3.5	G													
			Testing, Adjusting and Balancing	3.5	G													
			Field Training	3.7	G													
			SD-06 Test Reports															
			Performance Tests	3.6	G													
		15951	SD-02 Shop Drawings															
			HVAC Control System	3.1.1	G													
			SD-03 Product Data															
			Service Organizations	1.6	G													
			Equipment Compliance Booklet	1.6	G													
			Commissioning Procedures	3.4	G													
			Performance Verification Test	1.6	G													
			Procedures															
			Training	3.6	G													

SUBMITTAL REGISTER

CONTRACT NO.

TITLE AND LOCATION
F-22 FLIGHT KITCHEN, LAFB, VA

CONTRACTOR

ACTIVITY NO	TRANSMITTAL NO	SPEC SECT	DESCRIPTION ITEM SUBMITTED	PARAGRAPH #	CLASSIFICATION	GOVT OR A/E REVWR	CONTRACTOR: SCHEDULE DATES			CONTRACTOR ACTION		DATE FWD TO APPR AUTH/ DATE RCD FROM CONTR	APPROVING AUTHORITY				MAILED TO CONTR/ DATE RCD FRM APPR AUTH	REMARKS
							SUBMIT	APPROVAL NEEDED BY	MATERIAL NEEDED BY	ACTION CODE	DATE OF ACTION		DATE FWD TO OTHER REVIEWER	DATE RCD FROM OTH REVIEWER	ACTION CODE	DATE OF ACTION		
(a)	(b)	(c)	(d)	(e)	(f)		(g)	(h)	(i)	(j)	(k)	(l)	(m)	(n)	(o)	(p)	(q)	(r)
		15951	SD-06 Test Reports															
			Commissioning Report	3.6.2	G													
			Performance Verification Test	3.5.3	G													
		15990	SD-02 Shop Drawings															
			TAB Schematic Drawings and	3.3	G													
			Report Forms															
			SD-03 Product Data															
			TAB Related HVAC Submittals	3.2														
			TAB Procedures	3.5.1	G													
			Calibration	1.4	G													
			Systems Readiness Check	3.5.2	G													
			TAB Execution	3.5.1	G													
			TAB Verification	3.5.4	G													
			SD-06 Test Reports															
			Design Review Report	3.1	G													
			Systems Readiness Check	3.5.2	G													
			TAB Report	3.5.3	G													
			TAB Verification Report	3.5.4	G													
			SD-07 Certificates															
			Ductwork Leak Testing	3.4														
			TAB Firm	1.5.1														
			TAB Specialist	1.5.2														
		15995	SD-03 Product Data															
			Commissioning Team	3.1	G													
			Test Procedures	3.2	G													
			Test Schedule	3.2	G													

SUBMITTAL REGISTER

CONTRACT NO.

TITLE AND LOCATION
F-22 FLIGHT KITCHEN, LAFB, VA

CONTRACTOR

ACTIVITY NO	TRANSMITTAL NO	SPEC SECT	DESCRIPTION ITEM SUBMITTED	PARAGRAPH #	CLASSIFICATION	GOVT OR A/E REVWR	CONTRACTOR: SCHEDULE DATES			CONTRACTOR ACTION			APPROVING AUTHORITY					
							SUBMIT	APPROVAL NEEDED BY	MATERIAL NEEDED BY	ACTION CODE	DATE OF ACTION	DATE FWD TO APPR AUTH/ DATE RCD FROM CONTR	DATE FWD TO OTHER REVIEWER	DATE RCD FROM OTH REVIEWER	ACTION CODE	DATE OF ACTION	MAILED TO CONTR/ DATE RCD FRM APPR AUTH	REMARKS
(a)	(b)	(c)	(d)	(e)	(f)		(g)	(h)	(i)	(j)	(k)	(l)	(m)	(n)	(o)	(p)	(q)	(r)
		15995	SD-06 Test Reports															
			Test Reports	3.2	G													
		16375	SD-02 Shop Drawings															
			Electrical Distribution System	3.10.3	G													
			As-Built Drawings	3.12	G													
			SD-03 Product Data															
			Fault Current Analysis	2.18.4	G													
			Protective Device	2.18	G													
			Coordination Study	2.18.5	G													
			Nameplates	2.2	G													
			Material and Equipment	2.1	G													
			General Installation Requirements	3.1	G													
			SD-06 Test Reports															
			Factory Tests	2.16	G													
			Field Testing	3.10	G													
			Operating Tests	3.10.12	G													
			Cable Installation	3.2.1.4	G													
			SD-07 Certificates															
			Material and Equipment	2.1	G													
			Cable Joints	3.3	G													
			Cable Installer Qualifications	3.2.1.5	G													
			SD-10 Operation and Maintenance															
			Data															
			Electrical Distribution System	3.10.3	G													
		16415	SD-02 Shop Drawings															
			Interior Electrical Equipment	1.4	G													

SUBMITTAL REGISTER

CONTRACT NO.

TITLE AND LOCATION
F-22 FLIGHT KITCHEN, LAFB, VA

CONTRACTOR

ACTIVITY NO	TRANSMITTAL NO	SPEC SECT	DESCRIPTION ITEM SUBMITTED	PARAGRAPH #	CLASSIFICATION	GOVT OR A/E REVWR	CONTRACTOR: SCHEDULE DATES			CONTRACTOR ACTION			APPROVING AUTHORITY					
							SUBMIT	APPROVAL NEEDED BY	MATERIAL NEEDED BY	ACTION CODE	DATE OF ACTION	DATE FWD TO APPR AUTH/ DATE RCD FROM CONTR	DATE FWD TO OTHER REVIEWER	DATE RCD FROM OTH REVIEWER	ACTION CODE	DATE OF ACTION	MAILED TO CONTR/ DATE RCD FRM APPR AUTH	REMARKS
(a)	(b)	(c)	(d)	(e)	(f)		(g)	(h)	(i)	(j)	(k)	(l)	(m)	(n)	(o)	(p)	(q)	(r)
		16415	SD-03 Product Data															
			Fault Current Analysis and	2.30	G													
			Protective Device Coordination															
			Study															
			Manufacturer's Catalog	1.4	G													
			Material, Equipment, and Fixture	1.2.4	G													
			Lists															
			Installation Procedures	3.17	G													
			As-Built Drawings	1.2.6	G													
			Onsite Tests	3.23.2	G													
			SD-06 Test Reports															
			Field Test Plan	3.21	G													
			Field Test Reports	3.21	G													
			SD-07 Certificates															
			Materials	1.4														
			Interior Electrical Equipment	1.4	G													
		16710	SD-02 Shop Drawings															
			Premises Distribution System	1.7	G													
			Record Drawings	1.8.1	G													
			SD-03 Product Data															
			Record Keeping and	1.8	G													
			Documentation															
			Spare Parts	3.4														
			Manufacturer's Recommendations	3.1.2														
			Test Plan	3.6	G													
			Qualifications	1.4	G													

SUBMITTAL REGISTER

CONTRACT NO.

TITLE AND LOCATION
F-22 FLIGHT KITCHEN, LAFB, VA

CONTRACTOR

ACTIVITY NO	TRANSMITTAL NO	SPEC SECT	DESCRIPTION ITEM SUBMITTED	PARAG # RAPH	CLASSIFICATION	GOVT OR A/E REVWR	CONTRACTOR: SCHEDULE DATES			CONTRACTOR ACTION			APPROVING AUTHORITY					
							SUBMIT	APPROVAL NEEDED BY	MATERIAL NEEDED BY	ACTION CODE	DATE OF ACTION	DATE FWD TO APPR AUTH/ DATE RCD FROM CONTR	DATE FWD TO OTHER REVIEWER	DATE RCD FROM OTH REVIEWER	ACTION CODE	DATE OF ACTION	MAILED TO CONTR/ DATE RCD FRM APPR AUTH	REMARKS
(a)	(b)	(c)	(d)	(e)	(f)		(g)	(h)	(i)	(j)	(k)	(l)	(m)	(n)	(o)	(p)	(q)	(r)
		16710	SD-06 Test Reports															
			Test Reports	3.6	G													
			SD-07 Certificates															
			Premises Distribution System	1.7	G													
			Materials and Equipment	2.1	G													
			Installers	1.4.1	G													
		16721	SD-03 Product Data															
			Manufacturer's Catalog Data	1.3.2														
			Batteries	2.7.3														
			Voltage Drop	2.9														
			Spare Parts	2.8														
			SD-06 Test Reports															
			Testing	3.2														
			SD-07 Certificates															
			Testing	3.2														
			Equipment	2.3														
			Qualifications	1.4														
		16770	SD-02 Shop Drawings															
			Radio and Public Address System	1.3	G													
			Installation	3.1	G													
			SD-06 Test Reports															
			Approved Test Procedures	3.3	G													
			Acceptance Tests	3.3	G													
			SD-10 Operation and Maintenance															
			Data															
			Radio and Public Address System	1.3	G													

SECTION 01330

SUBMITTAL PROCEDURES
02/02

PART 1 GENERAL

1.1 SUMMARY

1.1.1 Government-Furnished Information

Submittal register database and submittal management program will be delivered to the contractor, by contracting officer with the RMS database. Register database will have the following fields completed, to the extent that will be required by the Government during subsequent usage.

Column (c): Lists specification section in which submittal is required.

Column (d): Lists each submittal description (SD No. and type, e.g. SD-04 Drawings) required in each specification section.

Column (e): Lists one principal paragraph in specification section where a material or product is specified. This listing is only to facilitate locating submitted requirements. Do not consider entries in column (e) as limiting project requirements.

Column (f): Indicate approving authority for each submittal. A "G" indicates approval by contracting officer; a blank indicates approval by QC manager.

The database and submittal management program will be extractable from the disk furnished to contractor, for operation on contractor's IBM compatible personal computer with 640kb RAM, a hard drive,and 3 1/2 inch high density floppy disk drive.

1.2 DEFINITIONS

1.2.1 Submittal

Shop drawings, product data, samples, operation and maintenance data,and administrative submittals presented for review and approval. Contract Clauses "FAR 52.236-5, Material and Workmanship," paragraph (b) and "FAR 52.236-21, Specifications and Drawings for Construction," paragraphs (d), (e), and (f) apply to all "submittals."

1.2.2 Types of Submittals

All submittals are classified as indicated in paragraph "Submittal Descriptions (SD)". Submittals also are grouped as follows:

a. Shop drawings: As used in this section, drawings, schedules, diagrams, and other data prepared specifically for this contract, by contractor or through contractor by way of subcontractor, manufacturer, supplier, distributor, or other lower tier contractor, to illustrate portion of work.

b. Product data: Preprinted material such as illustrations, standard schedules, performance charts, instructions, brochures, diagrams, manufacturer's descriptive literature, catalog data, and other data to illustrate portion of work, but not prepared exclusively for this contract.

c. Samples: Physical examples of products, materials, equipment, assemblies, or workmanship that are physically identical to portion of work, illustrating portion of work or establishing standards for evaluating appearance of finished work or both.

d. Operation and Maintenance (O&M) Data:
Data that is furnished by the manufacturer, or the system provider, to the equipment operating and maintenance personnel. This data is needed by operating and maintenance personnel for the safe and efficient operation, maintenance and repair of the item. The data is required when the item is delivered to the project site.

e. Administrative submittals: Data presented for reviews and approval to ensure that administrative requirements of project are adequately met but not to ensure directly that work is in accordance with design concept and in compliance with contract documents.

1.3 SUBMITTAL IDENTIFICATION (SD)

Submittals required are identified by SD numbers and titles as follows:

SD-01 Preconstruction Submittals

Certificates of insurance.
Surety bonds.
List of proposed subcontractors.
List of proposed products.
Construction Progress Schedule.
Submittal register.
Schedule of values.
Health and safety plan.
Work plan.
Quality control plan.
Environmental protection plan.

SD-02 Shop Drawings

Drawings, diagrams and schedules specifically prepared to illustrate some portion of the work.

Diagrams and instructions from a manufacturer or fabricator for use in producing the product and as aids to the Contractor for integrating the product or system into the project.

Drawings prepared by or for the Contractor to show how multiple systems and interdisciplinary work will be coordinated.

SD-03 Product Data

Catalog cuts, illustrations, schedules, diagrams, performance charts,

instructions and brochures illustrating size, physical appearance and other characteristics of materials or equipment for some portion of the work.

Samples of warranty language when the contract requires extended product warranties.

SD-04 Samples

Physical examples of materials, equipment or workmanship that illustrate functional and aesthetic characteristics of a material or product and establish standards by which the work can be judged.

Color samples from the manufacturer's standard line (or custom color samples if specified) to be used in selecting or approving colors for the project.

Field samples and mock-ups constructed on the project site establish standards by which the ensuring work can be judged. Includes assemblies or portions of assemblies which are to be incorporated into the project and those which will be removed at conclusion of the work.

SD-05 Design Data

Calculations, mix designs, analyses or other data pertaining to a part of work.

SD-06 Test Reports

Report signed by authorized official of testing laboratory that a material, product or system identical to the material, product or system to be provided has been tested in accord with specified requirements. (Testing must have been within three years of date of contract award for the project.)

Report which includes findings of a test required to be performed by the Contractor on an actual portion of the work or prototype prepared for the project before shipment to job site.

Report which includes finding of a test made at the job site or on sample taken from the job site, on portion of work during or after installation.

Investigation reports

Daily checklists

Final acceptance test and operational test procedure

SD-07 Certificates

Statements signed by responsible officials of manufacturer of product, system or material attesting that product, system or material meets specification requirements. Must be dated after award of project contract and clearly name the project.

Document required of Contractor, or of a supplier, installer or subcontractor through Contractor, the purpose of which is to further quality of orderly progression of a portion of the work by documenting

procedures, acceptability of methods or personnel qualifications.

Confined space entry permits.

SD-08 Manufacturer's Instructions

Preprinted material describing installation of a product, system or material, including special notices and Material Safety Data sheets concerning impedances, hazards and safety precautions.

SD-09 Manufacturer's Field Reports

Documentation of the testing and verification actions taken by manufacturer's representative to confirm compliance with manufacturer's standards or instructions.

Factory test reports.

SD-10 Operation and Maintenance Data

Data that is furnished by the manufacturer, or the system provider, to the equipment operating and maintenance personnel. This data is needed by operating and maintenance personnel for the safe and efficient operation, maintenance and repair of the item.

SD-11 Closeout Submittals

Documentation to record compliance with technical or administrative requirements or to establish an administrative mechanism.

1.3.1 Approving Authority

Person authorized to approve submittal.

1.3.2 Work

As used in this section, on- and off-site construction required by contract documents, including labor necessary to produce submittals, construction, materials, products, equipment, and systems incorporated or to be incorporated in such construction.

1.4 SUBMITTALS

Submit the following in accordance with the requirements of this section.

SD-01 Preconstruction Submittals

Submittal register; G

1.5 USE OF SUBMITTAL REGISTER DATABASE

Prepare and maintain submittal register, as the work progresses. Use electronic submittal register program furnished by the Government or any other format. Do not change data which is output in columns (c), (d), (e), and (f) as delivered by government; retain data which is output in columns (a), (g), (h), and (i) as approved.

1.5.1 Submittal Register

Submit submittal register as an electronic database, using submittals management program furnished to contractor. Submit with quality control plan and project schedule required by Section 01451, "Contractor Quality Control" and Section 01320, "Project Schedule." Do not change data in columns (c), (d), (e), and (f) as delivered by the government. Verify that all submittals required for project are listed and add missing submittals. Complete the following on the register database:

Column (a) Activity Number: Activity number from the project schedule.

Column (g) Contractor Submit Date: Scheduled date for approving authority to receive submittals.

Column (h) Contractor Approval Date: Date contractor needs approval of submittal.

Column (i) Contractor Material: Date that contractor needs material delivered to contractor control.

1.5.2 Contractor Use of Submittal Register

Update the following fields in the government-furnished submittal register program or equivalent fields in program utilized by contractor.

Column (b) Transmittal Number: Contractor assigned list of consecutive numbers.

Column (j) Action Code (k): Date of action used to record contractor's review when forwarding submittals to QC.

Column (l) List date of submittal transmission.

Column (q) List date approval received.

1.5.3 Approving Authority Use of Submittal Register

Update the following fields in the government-furnished submittal register program or equivalent fields in program utilized by contractor.

Column (b).

Column (l) List date of submittal receipt.

Column (m) through (p).

Column (q) List date returned to contractor.

1.5.4 Contractor Action Code and Action Code

Entries used will be as follows (others may be prescribed by Transmittal Form):

NR - Not Received

AN - Approved as noted

A - Approved

RR - Disapproved, Revise, and Resubmit

1.5.5 Copies Delivered to the Government

Deliver one copy of submitted register updated by contractor to government with each invoice request. Deliver in electronic format, unless a paper copy is requested by contracting officer.

1.6 PROCEDURES FOR SUBMITTALS

1.6.1 Reviewing, Certifying, Approving Authority

QC organization shall be responsible for reviewing and certifying that submittals are in compliance with contract requirements. Approving authority on submittals is QC manager unless otherwise specified for specific submittal. At each "Submittal" paragraph in individual specification sections, a notation "G," following a submittal item, indicates contracting officer is approving authority for that submittal item.

1.6.2 Constraints

a. Submittals listed or specified in this contract shall conform to provisions of this section, unless explicitly stated otherwise.

b. Submittals shall be complete for each definable feature of work; components of definable feature interrelated as a system shall be submitted at same time.

c. When acceptability of a submittal is dependent on conditions, items, or materials included in separate subsequent submittals, submittal will be returned without review.

d. Approval of a separate material, product, or component does not imply approval of assembly in which item functions.

1.6.3 Scheduling

a. Coordinate scheduling, sequencing, preparing and processing of submittals with performance of work so that work will not be delayed by submittal processing. Allow for potential requirements to resubmit.

b. Except as specified otherwise, allow review period, beginning with receipt by approving authority, that includes at least 15 working days for submittals for QC Manager approval and 30 working days for submittals for contracting officer approval. Period of review for submittals with contracting officer approval begins when Government receives submittal from QC organization. Period of review for each resubmittal is the same as for initial submittal.

c. For submittals requiring review by fire protection engineer, allow review period, beginning when government receives submittal from QC organization, of 30 working days for return of submittal to the contractor. Period of review for each resubmittal is the same as for initial submittal.

1.6.4 Variations

Variations from contract requirements require Government approval pursuant

to contract Clause entitled "FAR 52.236-21, Specifications and Drawings for Construction" and will be considered where advantageous to government.

1.6.4.1 Considering Variations

Discussion with contracting officer prior to submission, will help ensure functional and quality requirements are met and minimize rejections and resubmittals. When contemplating a variation which results in lower cost, consider submission of the variation as a Value Engineering Change Proposal (VECP).

1.6.4.2 Proposing Variations

When proposing variation, deliver written request to the contracting officer, with documentation of the nature and features of the variation and why the variation is desirable and beneficial to government. If lower cost is a benefit, also include an estimate of the cost saving. In addition to documentation required for variation, include the submittals required for the item. Clearly mark the proposed variation in all documentation.

1.6.4.3 Warranting That Variations Are Compatible

When delivering a variation for approval, contractor warrants that this contract has been reviewed to establish that the variation, if incorporated, will be compatible with other elements of work.

1.6.4.4 Review Schedule Is Modified

In addition to normal submittal review period, a period of 10 working days will be allowed for consideration by the Government of submittals with variations.

1.6.5 Contractor's Responsibilities

a. Determine and verify field measurements, materials, field construction criteria; review each submittal; and check and coordinate each submittal with requirements of the work and contract documents.

b. Transmit submittals to QC organization in accordance with schedule on approved Submittal Register, and to prevent delays in the work, delays to government, or delays to separate contractors.

c. Advise contracting officer of variation, as required by paragraph entitled "Variations."

d. Correct and resubmit submittal as directed by approving authority. When resubmitting disapproved transmittals or transmittals noted for resubmittal, the contractor shall provide copy of that previously submitted transmittal including all reviewer comments for use by approving authority. Direct specific attention in writing or on resubmitted submittal, to revisions not requested by approving authority on previous submissions.

e. Furnish additional copies of submittal when requested by contracting officer, to a limit of 20 copies per submittal.

f. Complete work which must be accomplished as basis of a submittal in time to allow submittal to occur as scheduled.

g. Ensure no work has begun until submittals for that work have been returned as "approved," or "approved as noted", except to the extent that a portion of work must be accomplished as basis of submittal.

1.6.6 QC Organization Responsibilities

a. Note date on which submittal was received from contractor on each submittal.

b. Review each submittal; and check and coordinate each submittal with requirements of work and contract documents.

c. Review submittals for conformance with project design concepts and compliance with contract documents.

d. Act on submittals, determining appropriate action based on QC organization's review of submittal.

(1) When QC manager is approving authority, take appropriate action on submittal from the possible actions defined in paragraph entitled, "Actions Possible."

(2) When contracting officer is approving authority or when variation has been proposed, forward submittal to Government with certifying statement or return submittal marked "not reviewed" or "revise and resubmit" as appropriate. The QC organization's review of submittal determines appropriate action.

e. Ensure that material is clearly legible.

f. Stamp each sheet of each submittal with QC certifying statement or approving statement, except that data submitted in bound volume or on one sheet printed on two sides may be stamped on the front of the first sheet only.

(1) When approving authority is contracting officer, QC organization will certify submittals forwarded to contracting officer with the following certifying statement:

"I hereby certify that the (equipment) (material) (article) shown and marked in this submittal is that proposed to be incorporated with contract Number _____, is in compliance with the contract drawings and specification, can be installed in the allocated spaces, and is submitted for Government approval.

Certified by Submittal Reviewer _____, Date _____
(Signature when applicable)

Certified by QC Manager _____, Date _____"
(Signature)

(2) When approving authority is QC Manager, QC Manager will use the following approval statement when returning submittals to contractor as "Approved" or "Approved as Noted."

"I hereby certify that the (material) (equipment) (article) shown and marked in this submittal and proposed to be incorporated with

contract Number _____, is in compliance with the contract drawings and specification, can be installed in the allocated spaces, and is _____ approved for use.

Certified by Submittal Reviewer _____, Date _____
(Signature when applicable)

Approved by QC Manager _____, Date _____"
(Signature)

g. Sign certifying statement or approval statement. The person signing certifying statements shall be QC organization member designated in the approved QC plan. The signatures shall be in original ink. Stamped signatures are not acceptable.

h. Update submittal register database as submittal actions occur and maintain the submittal register at project site until final acceptance of all work by contracting officer.

i. Retain a copy of approved submittals at project site, including contractor's copy of approved samples.

1.6.7 Government's Responsibilities

When approving authority is Contracting Officer, the Government will:

a. Note date on which submittal was received from QC manager, on each submittal for which the contracting officer is approving authority.

b. Review submittals for approval within scheduling period specified and only for conformance with project design concepts and compliance with contract documents.

c. Identify returned submittals with one of the actions defined in paragraph entitled "Actions Possible" and with markings appropriate for action indicated.

1.6.8 Actions Possible

Submittals will be returned with one of the following notations:

a. Submittals marked "not reviewed" will indicate submittal has been previously reviewed and approved, is not required , does not have evidence of being reviewed and approved by contractor, or is not complete. A submittal marked "not reviewed" will be returned with an explanation of the reason it is not reviewed. Resubmit submittals returned for lack of review by contractor or for being incomplete, with appropriate action, coordination, or change.

b. Submittals marked "approved" "approved as submitted" authorize contractor to proceed with work covered.

c. Submittals marked "approved as noted" or "approval except as noted; resubmission not required" authorize contractor to proceed with work as noted provided contractor takes no exception to the notations.

d. Submittals marked "revise and resubmit" or "disapproved" indicate submittal is incomplete or does not comply with design concept or

requirements of the contract documents and shall be resubmitted with appropriate changes. No work shall proceed for this item until resubmittal is approved.

1.7 FORMAT OF SUBMITTALS

1.7.1 Transmittal Form

Transmit each submittal, except sample installations and sample panels, to office of approving authority. Transmit submittals with transmittal form prescribed by Contracting Officer and standard for project. The transmittal form shall identify Contractor, indicate date of submittal, and include information prescribed by transmittal form and required in paragraph entitled "Identifying Submittals." Process transmittal forms to record actions regarding sample panels and sample installations.

1.7.2 Identifying Submittals

Identify submittals, except sample panel and sample installation, with the following information permanently adhered to or noted on each separate component of each submittal and noted on transmittal form. Mark each copy of each submittal identically, with the following:

a. Project title and location.

b. Construction contract number.

c. Section number of the specification section by which submittal is required.

d. Submittal description (SD) number of each component of submittal.

e. When a resubmission, add alphabetic suffix on submittal description, for example, SD-10A, to indicate resubmission.

f. Name, address, and telephone number of subcontractor, supplier, manufacturer and any other second tier contractor associated with submittal.

g. Product identification and location in project.

1.7.3 Format for Shop Drawings

a. Shop drawings shall not be less than 8 1/2 by 11 inches nor more than 30 by 42 inches.

b. Present 8 1/2 by 11 inches sized shop drawings as part of the bound volume for submittals required by section. Present larger drawings in sets.

c. Include on each drawing the drawing title, number, date, and revision numbers and dates, in addition to information required in paragraph entitled "Identifying Submittals."

d. Dimension drawings, except diagrams and schematic drawings; prepare drawings demonstrating interface with other trades to scale. Shop drawing dimensions shall be the same unit of measure as indicated on the contract drawings. Identify materials and products for work shown.

e. Reproduction and submission of contract drawing as shop drawing will be disapproved.

1.7.4 Format of Product Data

a. Present product data submittals for each section as a complete, bound volume. Include table of contents, listing page and catalog item numbers for product data.

b. Indicate, by prominent notation, each product which is being submitted; indicate specification section number and paragraph number to which it pertains.

c. Supplement product data with material prepared for project to satisfy submittal requirements for which product data does not exist. Identify this material as developed specifically for project.

1.7.5 Format of Samples

a. Furnish samples in sizes below, unless otherwise specified or unless the manufacturer has prepackaged samples of approximately same size as specified:

(1) Sample of Equipment or Device: Full size.

(2) Sample of Materials Less Than 2 by 3 inches: Built up to 8 1/2 by 11 inches.

(3) Sample of Materials Exceeding 8 1/2 by 11 inches: Cut down to 8 1/2 by 11 inches and adequate to indicate color, texture, and material variations.

(4) Sample of Linear Devices or Materials: 10 inch length or length to be supplied, if less than 10 inches. Examples of linear devices or materials are conduit and handrails.

(5) Sample of Non-Solid Materials: Pint. Examples of non-solid materials are sand and paint.

(6) Color Selection Samples: 2 by 4 inches.

(7) Sample Panel: 4 by 4 feet.

(8) Sample Installation: 100 square feet.

b. Samples Showing Range of Variation: Where variations are unavoidable due to nature of the materials, submit sets of samples of not less than three units showing extremes and middle of range.

c. Reusable Samples: Incorporate returned samples into work only if so specified or indicated. Incorporated samples shall be in undamaged condition at time of use.

d. Recording of Sample Installation: Note and preserve the notation of area constituting sample installation but remove notation at final clean up of project.

e. When color, texture or pattern is specified by naming a particular manufacturer and style, include one sample of that manufacturer and style, for comparison.

1.7.6 Format of Operation and Maintenance (O&M) Data

a. O&M Data format shall comply with the requirements specified in Section 01781, "Operation and Maintenance Data"

1.7.7 Format of Administrative Submittals

a. When submittal includes a document which is to be used in project or become part of project record, other than as a submittal, do not apply contractor's approval stamp to document, but to a separate sheet accompanying document.

1.8 QUANTITY OF SUBMITTALS

1.8.1 Number of Copies of Shop Drawings

a. Submit six copies of submittals of shop drawings requiring review and approval only by QC organization and seven copies of shop drawings requiring review and approval by Contracting Officer.

1.8.2 Number of Copies of Product Data

Submit product data in compliance with quantity requirements specified for shop drawings.

1.8.3 Number of Samples

a. Submit two samples, or two sets of samples showing range of variation, of each required item. One approved sample or set of samples will be retained by approving authority and one will be returned to contractor.

b. Submit one sample panel. Include components listed in technical section or as directed.

c. Submit one sample installation, where directed.

d. Submit one sample of non-solid materials.

1.8.4 Number of Copies of Operation and Maintenance Data

Submit Five copies of O&M Data to the Contracting Officer for review and approval. See Section 01781, "Operating and Maintenance Data" for further requirements.

1.8.5 Number of Copies of Administrative Submittals

a. Unless otherwise specified, submit administrative submittals compliance with quantity requirements specified for shop drawings.

1.9 FORWARDING SUBMITTALS

1.9.1 Submittals Required from the Contractor

As soon as practicable after notice to proceed, but not later than 63

calendar days after notice to proceed, the Contractor shall forward to the Contracting Officer all copies of all submittals designated for Government Approval (G). Submittals shall be as required in the technical sections of this specification, including shop drawings, product data, design data, certificates, and samples. In addition to submittals designated for G, any anticipated deviations requiring Government Approval shall be submitted within this 63 day period. Submittal types SD-06 (Test Reports), SD-09 (Manufacturer's Field Reports), SD-10 (Operations and Maintenance Data) and SD-11 (Closeout Submittals) need not be submitted within this 63 day limit; these submittal types shall be submitted by the dates/times established in the specification.

1.9.1.1 O&M Data

The Contracting Officer will review and approve O&M Data to verify the submittals comply with the contract requirements.

a. In the event the Contractor fails to deliver O&M Data within the time limits specified, the Contracting Officer may withhold from progress payments 50 percent of the price of the item with which such O&M Data are applicable.

1.10 SUBMITTAL CLASSIFICATION

Submittals are classified as follows:

1.10.1 Government Approved

Government approval is required for extensions of design, critical materials, deviations, equipment whose compatibility with the entire system must be checked, and other items as designated by the Contracting Officer. Within the terms of the Contract Clause entitled "Specifications and Drawings for Construction," they are considered to be "shop drawings."

1.10.2 Information Only

All submittals not requiring Government approval will be for information only. They are not considered to be "shop drawings" within the terms of the Contract Clause referred to above.

1.11 APPROVED SUBMITTALS

The Contracting Officer's approval of submittals shall not be construed as a complete check, but will indicate only that the general method of construction, materials, detailing and other information are satisfactory. Approval will not relieve the Contractor of the responsibility for any error which may exist, as the Contractor under the Contractor Quality Control (CQC) requirements of this contract is responsible for dimensions, the design of adequate connections and details, and the satisfactory construction of all work. After submittals have been approved by the Contracting Officer, no resubmittal for the purpose of substituting materials or equipment will be considered unless accompanied by an explanation of why a substitution is necessary.

1.12 DISAPPROVED SUBMITTALS

The Contractor shall make all corrections required by the Contracting Officer and promptly furnish a corrected submittal in the form and number of copies specified for the initial submittal. If the Contractor considers

any correction indicated on the submittals to constitute a change to the contract, a notice in accordance with the Contract Clause "Changes" shall be given promptly to the Contracting Officer.

1.13 WITHHOLDING OF PAYMENT

Payment for materials incorporated in the work will not be made if required approvals have not been obtained.

1.14 GENERAL

The Contractor shall make submittals as required by the specifications. The Contracting Officer may request submittals in addition to those specified when deemed necessary to adequately describe the work covered in the respective sections. Units of weights and measures used on all submittals shall be the same as those used in the contract drawings. Each submittal shall be complete and in sufficient detail to allow ready determination of compliance with contract requirements. Prior to submittal, all items shall be checked and approved by the Contractor's Quality Control (CQC) System Manager and each item shall be stamped, signed, and dated by the CQC System Manager indicating action taken. Proposed deviations from the contract requirements shall be clearly identified. Submittals shall include items such as: Contractor's, manufacturer's, or fabricator's drawings; descriptive literature including (but not limited to) catalog cuts, diagrams, operating charts or curves; test reports; test cylinders; samples; O&M manuals (including parts list); certifications; warranties; and other such required submittals. Submittals requiring Government approval shall be scheduled and made prior to the acquisition of the material or equipment covered thereby. Samples remaining upon completion of the work shall be picked up and disposed of in accordance with manufacturer's Material Safety Data Sheets (MSDS) and in compliance with existing laws and regulations.

1.15 SUBMITTAL REGISTER

At the end of this section is a submittal register showing items of equipment and materials for which submittals are required by the specifications; this list may not be all inclusive and additional submittals may be required. The Contractor shall maintain a submittal register for the project in accordance with Section 01451, Contractor Quality Control." The Government will provide the initial submittal register in electronic format. Thereafter, the Contractor shall maintain a complete list of all submittals, including completion of all data columns. Dates on which submittals are received and returned by the Government will be included in its export file to the Contractor. The Contractor shall track all submittals.

1.16 SCHEDULING

Submittals covering component items forming a system or items that are interrelated shall be scheduled to be coordinated and submitted concurrently. Certifications to be submitted with the pertinent drawings shall be so scheduled. As required by paragraph 1.9.1, all submittals designated for Government Approval (G) should be submitted within 63 calendar days of notice to proceed. No delay damages or time extensions will be allowed for time lost in late submittals.

1.17 TRANSMITTAL FORM (ENG FORM 4025)

The sample transmittal form (ENG Form 4025) attached to this section shall be used for submitting both Government approved and information only submittals in accordance with the instructions on the reverse side of the form. These forms are included in the RMS database that the Contractor is required to use for this contract. This form shall be properly completed by filling out all the heading blank spaces and identifying each item submitted. Special care shall be exercised to ensure proper listing of the specification paragraph and/or sheet number of the contract drawings pertinent to the data submitted for each item.

1.18 DEVIATIONS

For submittals which include proposed deviations requested by the Contractor, the column "variation" of ENG Form 4025 shall be checked. The Contractor shall set forth in writing the reason for any deviations and annotate such deviations on the submittal. The Government reserves the right to rescind inadvertent approval of submittals containing unnoted deviations.

1.19 CONTROL OF SUBMITTALS

The Contractor shall carefully control his procurement operations to ensure that each individual submittal is made on or before the Contractor scheduled submittal date shown on the approved "Submittal Register."

1.20 GOVERNMENT APPROVED SUBMITTALS

Upon completion of review of submittals requiring Government approval, the submittals will be identified as having received approval by being so stamped and dated. 2 copies of the submittal will be retained by the Contracting Officer and 4 copies of the submittal will be returned to the Contractor.

1.21 INFORMATION ONLY SUBMITTALS

Normally submittals for information only will not be returned. Approval of the Contracting Officer is not required on information only submittals. The Government reserves the right to require the Contractor to resubmit any item found not to comply with the contract. This does not relieve the Contractor from the obligation to furnish material conforming to the plans and specifications; will not prevent the Contracting Officer from requiring removal and replacement of nonconforming material incorporated in the work; and does not relieve the Contractor of the requirement to furnish samples for testing by the Government laboratory or for check testing by the Government in those instances where the technical specifications so prescribe.

1.22 STAMPS

Stamps used by the Contractor on the submittal data to certify that the submittal meets contract requirements shall be similar to the following:

CONTRACTOR

(Firm Name)

_____ Approved

_____ Approved with corrections as noted on submittal data and/or attached sheets(s).

SIGNATURE: _____

TITLE: _____

DATE: _____

PART 2 PRODUCTS

Not used.

PART 3 EXECUTION

Not used.

-- End of Section --

SECTION 01341

COLOR/FINISH SAMPLE BOARDS
7/02

PART 1 GENERAL

1.1 SUBMITTALS

a. Four (4) complete sets of coordinated color/finish sample boards shall be submitted to the Contracting Officer for approval within 63 calendar days after Notice to Proceed (NTP). Upon receipt of the submitted samples, a 14-day review period by the Government can be anticipated.

b. Interior color/finish boards shall have attached samples of all interior appearance related construction items the Contractor proposes to furnish, including, but not limited to such items as interior paints; wood finishes; ceramic tile; floor coverings; wall coverings; ceiling tiles; plastic laminates; solid surface materials; signage, etc. Exterior color/finish boards shall have attached samples of all exterior appearance related construction items the Contractor proposes to furnish, including but not limited to such items as brick; mortar; paints; window and door frames; roof; soffits; gutters and downspouts; pre-cast units, etc. Each sample shall indicate color, texture, and finish and shall be identified as to type of material and area of installation. Samples shall be arranged on the board relative to the spaces they represent (e.g. locker room, gym, offices). Technical submittals on finish materials and color boards shall be submitted simultaneously so that compliance with specification requirements is demonstrated at the time of color approval. Identification of each sample shall include the transmittal number under which certification of the material represented has been submitted in accordance with the requirements of Section, SUBMITTAL PROCEDURES. Submittals shall be complete; partial submittals will not be acceptable. The sample board backing material shall be of sufficient strength to maintain its original configuration after samples have been attached to it. The Contractor shall obtain approval of the total construction color board before start of any finish work involving any item included on the color board.

c. After receipt of final approval from the Government, the Contractor shall prepare and submit to the Contracting Officer one set of approved and corrected color/finish sample boards. Construction color boards must match those approved during design.

1.2 FORMAT

a. Binders: Provide submittals in 8-1/2" by 11" format. Use sturdy three-ring binders of appropriate diameter.

b. Card Stock Sheets: Sheets containing samples shall be heavy, medium gray illustration board (not white or colored) capable of supporting a four inch by eight inch quarry tile, without distorting binder release or causing sheet tear-out due to hole

failure.

c. Mounting: Loose and lost samples are a major concern. All samples must stay mounted for many months of handling. Adhesives must be appropriate for the sample. For instance, white glue is appropriate for paper or cloth and construction adhesive is good for masonry.

d. Content: A typical color board consists of all samples, a finish schedule, floor plan, and interior elevations with each clearly indicating the location of each finish/color. Items other than material sample boards may be folded to 8-1/2" by 11" (i.e., floor plans, finish schedules etc.).

e. Identification: Identify each sample by use, location, and manufacturer's name. Group according to the location where each used.

PART 2 PRODUCTS (Not Applicable)

PART 3 EXECUTION (Not Applicable)

-- End of Section --

SECTION 01355

ENVIRONMENTAL PROTECTION
10/00

PART 1 GENERAL

1.1 REFERENCES

The publications listed below form a part of this specification to the extent referenced. The publications are referred to in the text by basic designation only.

U.S. AIR FORCE (USAF)

AFI 32-1053	Pest Management Program

U.S. NATIONAL ARCHIVES AND RECORDS ADMINISTRATION (NARA)

33 CFR 328	Definitions
40 CFR 68	Chemical Accident Prevention Provisions
40 CFR 152 - 186	Pesticide Programs
40 CFR 260	Hazardous Waste Management System: General
40 CFR 261	Identification and Listing of Hazardous Waste
40 CFR 262	Standards Applicable to Generators of Hazardous Waste
40 CFR 279	Standards for the Management of Used Oil
40 CFR 302	Designation, Reportable Quantities, and Notification
40 CFR 355	Emergency Planning and Notification
49 CFR 171 - 178	Hazardous Materials Regulations

U.S. ARMY CORPS OF ENGINEERS (USACE)

EM 385-1-1	(1996) U.S. Army Corps on Engineers Safety and Health Requirements Manual
WETLAND MANUAL	Corps of Engineers Wetlands Delineation Manual Technical Report Y-87-1

1.2 DEFINITIONS

1.2.1 Environmental Pollution and Damage

Environmental pollution and damage is the presence of chemical, physical, or biological elements or agents which adversely affect human health or welfare; unfavorably alter ecological balances of importance to human life; affect other species of importance to humankind; or degrade the environment aesthetically, culturally and/or historically.

1.2.2 Environmental Protection

Environmental protection is the prevention/control of pollution and habitat disruption that may occur to the environment during construction. The control of environmental pollution and damage requires consideration of land, water, and air; biological and cultural resources; and includes management of visual aesthetics; noise; solid, chemical, gaseous, and liquid waste; radiant energy and radioactive material as well as other pollutants.

1.2.3 Contractor Generated Hazardous Waste

Contractor generated hazardous waste means materials that, if abandoned or disposed of, may meet the definition of a hazardous waste. These waste streams would typically consist of material brought on site by the Contractor to execute work, but are not fully consumed during the course of construction. Examples include, but are not limited to, excess paint thinners (i.e. methyl ethyl ketone, toluene etc.), waste thinners,excess paints, excess solvents, waste solvents, and excess pesticides, and contaminated pesticide equipment rinse water.

1.2.4 Installation Pest Management Coordinator

Installation Pest Management Coordinator (IPMC) is the individual officially designated by the Installation Commander to oversee the Installation Pest Management Program and the Installation Pest Management Plan.

1.2.4 Project Pesticide Coordinator

The Project Pesticide Coordinator (PPC) is an individual that resides at a Civil Works Project office and that is responsible for oversight of pesticide application on Project grounds.

1.2.5 Land Application for Discharge Water

The term "Land Application" for discharge water implies that the Contractor shall discharge water at a rate which allows the water to percolate into the soil. No sheeting action, soil erosion, discharge into storm sewers, discharge into defined drainage areas, or discharge into the "waters of the United States" shall occur. Land Application shall be in compliance with all applicable Federal, State, and local laws and regulations.

1.2.6 Pesticide

Pesticide is defined as any substance or mixture of substances intended for preventing, destroying, repelling, or mitigating any pest, or intended for use as a plant regulator, defoliant or desiccant.

1.2.7 Pests

The term "pests" means arthropods, birds, rodents, nematodes, fungi,

bacteria, viruses, algae, snails, marine borers, snakes, weeds and other organisms (except for human or animal disease-causing organisms) that adversely affect readiness, military operations, or the well-being of personnel and animals; attack or damage real property, supplies, equipment, or vegetation; or are otherwise undesirable.

1.2.8 Surface Discharge

The term "Surface Discharge" implies that the water is discharged with possible sheeting action and subsequent soil erosion may occur. Waters that are surface discharged may terminate in drainage ditches, storm sewers,creeks, and/or "waters of the United States" and would require a permit to discharge water from the governing agency.

1.2.9 Waters of the United States

All waters which are under the jurisdiction of the Clean Water Act, as defined in 33 CFR 328.

1.2.10 Wetlands

Wetlands means those areas that are inundated or saturated by surface or ground water at a frequency and duration sufficient to support, and that under normal circumstances do support, a prevalence of vegetation typically adapted for life in saturated soil conditions. Wetlands generally include swamps, marshes, and bogs. Official determination of whether or not an area is classified as a wetland must be done in accordance with WETLAND MANUAL.

1.3 GENERAL REQUIREMENTS

The Contractor shall minimize environmental pollution and damage that may occur as the result of construction operations. The environmental resources within the project boundaries and those affected outside the limits of permanent work shall be protected during the entire duration of this contract. The Contractor shall comply with all applicable environmental Federal, State, and local laws and regulations. The Contractor shall be responsible for any delays resulting from failure to comply with environmental laws and regulations.

1.4 SUBCONTRACTORS

The Contractor shall ensure compliance with this section by subcontractors.

1.5 PAYMENT

No separate payment will be made for work covered under this section. The Contractor shall be responsible for payment of fees associated with environmental permits, application, and/or notices obtained by the Contractor. All costs associated with this section shall be included in the contract price. The Contractor shall be responsible for payment of all fines/fees for violation or non-compliance with Federal, State, Regional and local laws and regulations.

1.6 SUBMITTALS

Government approval is required for submittals with a "G" designation; submittals not having a "G" designation are for information only. When used, a designation following the "G" designation identifies the office

that will review the submittal for the Government. The following shall be submitted in accordance with Section 01330 SUBMITTAL PROCEDURES:

SD-01 Preconstruction Submittals

Environmental Protection Plan; G

The environmental protection plan.

1.7 ENVIRONMENTAL PROTECTION PLAN

Prior to commencing construction activities or delivery of materials to the site, the Contractor shall submit an Environmental Protection Plan for review and approval by the Contracting Officer. The purpose of the Environmental Protection Plan is to present a comprehensive overview of known or potential environmental issues which the Contractor must address during construction. Issues of concern shall be defined within the Environmental Protection Plan as outlined in this section. The Contractor shall address each topic at a level of detail commensurate with the environmental issue and required construction task(s). Topics or issues which are not identified in this section, but which the Contractor considers necessary, shall be identified and discussed after those items formally identified in this section. Prior to submittal of the Environmental Protection Plan, the Contractor shall meet with the Contracting Officer for the purpose of discussing the implementation of the initial Environmental Protection Plan; possible subsequent additions and revisions to the plan including any reporting requirements; and methods for administration of the Contractor's Environmental Plans. The Environmental Protection Plan shall be current and maintained onsite by the Contractor.

1.7.1 Compliance

No requirement in this Section shall be construed as relieving the Contractor of any applicable Federal, State, and local environmental protection laws and regulations. During Construction, the Contractor shall be responsible for identifying, implementing, and submitting for approval any additional requirements to be included in the Environmental Protection Plan.

1.7.2 Contents

The environmental protection plan shall include, but shall not be limited to, the following:

a. Name(s) of person(s) within the Contractor's organization who is(are) responsible for ensuring adherence to the Environmental Protection Plan.

b. Name(s) and qualifications of person(s) responsible for manifesting hazardous waste to be removed from the site, if applicable.

c. Name(s) and qualifications of person(s) responsible for training the Contractor's environmental protection personnel.

d. Description of the Contractor's environmental protection personnel training program.

e. An erosion and sediment control plan which identifies the type and location of the erosion and sediment controls to be provided. The plan

shall include monitoring and reporting requirements to assure that the control measures are in compliance with the erosion and sediment control plan, Federal, State, and local laws and regulations. A Storm Water Pollution Prevention Plan (SWPPP) may be substituted for this plan.

f. Drawings showing locations of proposed temporary excavations or embankments for haul roads, stream crossings, material storage areas, structures, sanitary facilities, and stockpiles of excess or spoil materials including methods to control runoff and to contain materials on the site.

g. Traffic control plans including measures to reduce erosion of temporary roadbeds by construction traffic, especially during wet weather. Plan shall include measures to minimize the amount of mud transported onto paved public roads by vehicles or runoff.

h. Work area plan showing the proposed activity in each portion of the area and identifying the areas of limited use or nonuse. Plan should include measures for marking the limits of use areas including methods for protection of features to be preserved within authorized work areas.

i. Drawing showing the location of borrow areas.

j. The Spill Control plan shall include the procedures, instructions, and reports to be used in the event of an unforeseen spill of a substance regulated by 40 CFR 68, 40 CFR 302, 40 CFR 355, and/or regulated under State or Local laws and regulations. The Spill Control Plan supplements the requirements of EM 385-1-1. This plan shall include as a minimum:

1. The name of the individual who will report any spills or hazardous substance releases and who will follow up with complete documentation. This individual shall immediately notify the Contracting Officer and Facility Environmental Office in addition to the legally required Federal, State, and local reporting channels (including the National Response Center 1-800-424-8802) if a reportable quantity is released to the environment. The plan shall contain a list of the required reporting channels and telephone numbers.

2. The name and qualifications of the individual who will be responsible for implementing and supervising the containment and cleanup.

3. Training requirements for Contractor's personnel and methods of accomplishing the training.

4. A list of materials and equipment to be immediately available at the job site, tailored to cleanup work of the potential hazard(s) identified.

5. The names and locations of suppliers of containment materials and locations of additional fuel oil recovery, cleanup, restoration, and material-placement equipment available in case of an unforeseen spill emergency.

6. The methods and procedures to be used for expeditious contaminant cleanup.

k. A non-hazardous solid waste disposal plan identifying methods and locations for solid waste disposal including clearing debris. The plan shall include schedules for disposal. The Contractor shall identify any subcontractors responsible for the transportation and disposal of solid waste. Licenses or permits shall be submitted for solid waste disposal sites that are not a commercial operating facility. Evidence of the disposal facility's acceptance of the solid waste shall be attached to this plan during the construction. The Contractor shall attach a copy of each of the Non-hazardous Solid Waste Diversion Reports to the disposal plan. The report shall be submitted on the first working day after the first quarter that non-hazardous solid waste has been disposed and/or diverted and shall be for the previous quarter (e.g. the first working day of January, April, July, and October). The report shall indicate the total amount of waste generated and total amount of waste diverted in cubic yards or tons along with the percent that was diverted.

l. A recycling and solid waste minimization plan with a list of measures to reduce consumption of energy and natural resources. The plan shall detail the Contractor's actions to comply with and to participate in Federal, State, Regional, and local government sponsored recycling programs to reduce the volume of solid waste at the source.

m. An air pollution control plan detailing provisions to assure that dust, debris, materials, trash, etc., do not become air borne and travel off the project site.

n. A contaminant prevention plan that: identifies potentially hazardous substances to be used on the job site; identifies the intended actions to prevent introduction of such materials into the air, water, or ground; and details provisions for compliance with Federal, State, and local laws and regulations for storage and handling of these materials. In accordance with EM 385-1-1, a copy of the Material Safety Data Sheets (MSDS) and the maximum quantity of each hazardous material to be on site at any given time shall be included in the contaminant prevention plan. As new hazardous materials are brought on site or removed from the site, the plan shall be updated.

o. A waste water management plan that identifies the methods and procedures for management and/or discharge of waste waters which are directly derived from construction activities, such as concrete curing water, clean-up water, dewatering of ground water, disinfection water, hydrostatic test water, and water used in flushing of lines. If a settling/retention pond is required, the plan shall include the design of the pond including drawings, removal plan, and testing requirements for possible pollutants. If land application will be the method of disposal for the waste water, the plan shall include a sketch showing the location for land application along with a description of the pretreatment methods to be implemented. If surface discharge will be the method of disposal, a copy of the permit and associated documents shall be included as an attachment prior to discharging the waste water. If disposal is to a sanitary sewer, the plan shall include documentation that the Waste Water Treatment Plant Operator has approved the flow rate, volume, and type of discharge.

p. A historical, archaeological, cultural resources biological resources and wetlands plan that defines procedures for identifying and protecting historical, archaeological, cultural resources, biological

resources and wetlands known to be on the project site: and/or identifies procedures to be followed if historical archaeological, cultural resources, biological resources and wetlands not previously known to be onsite or in the area are discovered during construction. The plan shall include methods to assure the protection of known or discovered resources and shall identify lines of communication between Contractor personnel and the Contracting Officer.

q. A pesticide treatment plan shall be included and updated, as information becomes available. The plan shall include: sequence of treatment, dates, times, locations, pesticide trade name, EPA registration numbers, authorized uses, chemical composition, formulation, original and applied concentration, application rates of active ingredient (i.e. pounds of active ingredient applied), equipment used for application and calibration of equipment. The Contractor is responsible for Federal, State, Regional and Local pest management record keeping and reporting requirements as well as any additional Installation Project Office specific requirements. The Contractor shall follow AFI 32-1053 Sections 3.4.13 and 3.4.14 for data required to be reported to the Installation.

1.7.3 Appendix

Copies of all environmental permits, permit application packages, approvals to construct, notifications, certifications, reports, and termination documents shall be attached, as an appendix, to the Environmental Protection Plan.

1.8 PROTECTION FEATURES

This paragraph supplements the Contract Clause PROTECTION OF EXISTING VEGETATION, STRUCTURES, EQUIPMENT, UTILITIES, AND IMPROVEMENTS. Prior to start of any onsite construction activities, the Contractor and the Contracting Officer shall make a joint condition survey. Immediately following the survey, the Contractor shall prepare a brief report including a plan describing the features requiring protection under the provisions of the Contract Clauses, which are not specifically identified on the drawings as environmental features requiring protection along with the condition of trees, shrubs and grassed areas immediately adjacent to the site of work and adjacent to the Contractor's assigned storage area and access route(s), as applicable. This survey report shall be signed by both the Contractor and the Contracting Officer upon mutual agreement as to its accuracy and completeness. The Contractor shall protect those environmental features included in the survey report and any indicated on the drawings, regardless of interference which their preservation may cause to the Contractor's work under the contract.

1.9 SPECIAL ENVIRONMENTAL REQUIREMENTS

The Contractor shall comply with the special environmental requirements listed here and included at the end of this section.

1.10 ENVIRONMENTAL ASSESSMENT OF CONTRACT DEVIATIONS

Any deviations, requested by the Contractor, from the drawings,plans and specifications which may have an environmental impact will be subject to approval by the Contracting Officer and may require an extended review, processing, and approval time. The Contracting Officer reserves the right to disapprove alternate methods, even if they are more cost effective, if

the Contracting Officer determines that the proposed alternate method will have an adverse environmental impact.

1.11 NOTIFICATION

The Contracting Officer will notify the Contractor in writing of any observed noncompliance with Federal, State or local environmental laws or regulations, permits, and other elements of the Contractor's Environmental Protection plan. The Contractor shall, after receipt of such notice, inform the Contracting Officer of the proposed corrective action and take such action when approved by the Contracting Officer. The Contracting Officer may issue an order stopping all or part of the work until satisfactory corrective action has been taken. No time extensions shall be granted or equitable adjustments allowed to the Contractor for any such suspensions. This is in addition to any other actions the Contracting Officer may take under the contract, or in accordance with the Federal Acquisition Regulation or Federal Law.

PART 2 PRODUCTS (NOT USED)

PART 3 EXECUTION

3.1 ENVIRONMENTAL PERMITS AND COMMITMENTS

This paragraph supplements the Contractor's responsibility under the contract clause "PERMITS AND RESPONSIBILITIES" to the extent that the Government has obtained the permits noted on the attached table. The Contractor shall comply with the terms and conditions of the attached list of permits at the end of this section.

The Contractor shall be responsible for obtaining and complying with all environmental permits and commitments required by Federal, State, Regional, and local environmental laws and regulations except those noted above as being obtained by the government.

3.2 LAND RESOURCES

The Contractor shall confine all activities to areas defined by the drawings and specifications. Prior to the beginning of any construction, the Contractor shall identify any land resources to be preserved within the work area. Except in areas indicated on the drawings or specified to be cleared, the Contractor shall not remove, cut, deface, injure, or destroy land resources including trees, shrubs, vines, grasses, topsoil, and land forms without approval. No ropes, cables, or guys shall be fastened to or attached to any trees for anchorage unless specifically authorized. The Contractor shall provide effective protection for land and vegetation resources at all times as defined in the following subparagraphs. Stone, soil, or other materials displaced into uncleared areas shall be removed by the Contractor.

3.2.1 Work Area Limits

Prior to commencing construction activities, the Contractor shall mark the areas that need not be disturbed under this contract. Isolated areas within the general work area which are not to be disturbed shall be marked or fenced. Monuments and markers shall be protected before construction operations commence. Where construction operations are to be conducted during darkness, any markers shall be visible in the dark. The Contractor's personnel shall be knowledgeable of the purpose for marking

and/or protecting particular objects.

3.2.2 Landscape

Trees, shrubs, vines, grasses, land forms and other landscape features indicated and defined on the drawings to be preserved shall be clearly identified by marking, fencing, or wrapping with boards, or any other approved techniques. The Contractor shall restore landscape features damaged or destroyed during construction operations outside the limits of the approved work area.

3.2.3 Erosion and Sediment Controls

The Contractor shall be responsible for providing erosion and sediment control measures in accordance with Federal, State, and local laws and regulations. The erosion and sediment controls selected and maintained by the Contractor shall be such that water quality standards are not violated as a result of the Contractor's construction activities. The area of bare soil exposed at any one time by construction operations should be kept to a minimum. The Contractor shall construct or install temporary and permanent erosion and sediment control best management practices (BMPs) as indicated on the drawings or as specified in Section 01356 STORM WATER POLLUTION PREVENTION MEASURES. BMPs may include, but not be limited to, vegetation cover, stream bank stabilization, slope stabilization, silt fences, construction of terraces, interceptor channels, sediment traps, inlet and outfall protection, diversion channels, and sedimentation basins. The Contractor's best management practices shall also be in accordance with the National Pollutant Discharge Elimination System (NPDES) Storm Water Pollution Prevention Plan (SWPPP) which may be reviewed at the Environmental Office. Any temporary measures shall be removed after the area has been stabilized.

3.2.4 Contractor Facilities and Work Areas

The Contractor's field offices, staging areas, stockpile storage, and temporary buildings shall be placed in areas designated on the drawings or as directed by the Contracting Officer. Temporary movement or relocation of Contractor facilities shall be made only when approved. Erosion and sediment controls shall be provided for on-site borrow and spoil areas to prevent sediment from entering nearby waters. Temporary excavation and embankments for plant and/or work areas shall be controlled to protect adjacent areas.

3.3 WATER RESOURCES

The Contractor shall monitor construction activities to prevent pollution of surface and ground waters. Toxic or hazardous chemicals shall not be applied to soil or vegetation unless otherwise indicated. All water areas affected by construction activities shall be monitored by the Contractor. For construction activities immediately adjacent to impaired surface waters, the Contractor shall be capable of quantifying sediment or pollutant loading to that surface water when required by State or Federally issued Clean Water Act permits.

3.3.1 Cofferdams, Diversions, and Dewatering Operations

Construction operations for dewatering, shall be controlled at all times to maintain compliance with existing State water quality standards and designated uses of the surface water body. The Contractor shall comply

with the State of Virginia water quality standards and anti-degradation provisions and the Clean Water Act Section 404.

3.3.2 Wetlands

The Contractor shall not enter, disturb, destroy, or allow discharge of contaminants into any wetlands except as authorized herein. The Contractor shall be responsible for the protection of wetlands shown on the drawings in accordance with paragraph ENVIRONMENTAL PERMITS, REVIEWS, AND APPROVALS. Authorization to enter specific wetlands identified shall not relieve the Contractor from any obligation to protect other wetlands within, adjacent to, or in the vicinity of the construction site and associated boundaries.

3.4 AIR RESOURCES

Equipment operation, activities, or processes performed by the Contractor shall be in accordance with all Federal and State air emission and performance laws and standards.

3.4.1 Particulates

Dust particles; aerosols and gaseous by-products from construction activities; and processing and preparation of materials, such as from asphaltic batch plants; shall be controlled at all times, including weekends, holidays and hours when work is not in progress. The Contractor shall maintain excavations, stockpiles, haul roads, permanent and temporary access roads, plant sites, spoil areas, borrow areas, and other work areas within or outside the project boundaries free from particulates which would cause the Federal, State, and local air pollution standards to be exceeded or which would cause a hazard or a nuisance. Sprinkling, chemical treatment of an approved type, or other methods will be permitted to control particulates in the work area. Sprinkling, to be efficient, must be repeated to keep the disturbed area damp at all times. The Contractor must have sufficient, competent equipment available to accomplish these tasks. Particulate control shall be performed as the work proceeds and whenever a particulate nuisance or hazard occurs. The Contractor shall comply with all State and local visibility regulations.

3.4.2 Odors

Odors from construction activities shall be controlled at all times. The odors shall not cause a health hazard and shall be in compliance with State regulations and/or local ordinances.

3.4.3 Sound Intrusions

The Contractor shall keep construction activities under surveillance and control to minimize environment damage by noise. The Contractor shall comply with the provisions of the State of Virginia rules.

3.4.4 Burning

Burning shall be prohibited on the Government premises.

3.5 AIR EMISSION CONTROL

The Contractor shall implement the control(s) to meet or exceed performance levels identified in Langley AFB Air Monitoring as well as all Federal, State, and Local laws and regulations.

3.6 CHEMICAL MATERIALS MANAGEMENT AND WASTE DISPOSAL

Disposal of wastes shall be as directed below, unless otherwise specified in other sections and/or shown on the drawings.

3.6.1 Solid Wastes

Solid wastes (excluding clearing debris) shall be placed in containers which are emptied on a regular schedule. Handling, storage, and disposal shall be conducted to prevent contamination. Segregation measures shall be employed so that no hazardous or toxic waste will become co-mingled with solid waste. The Contractor shall transport solid waste off Government property and dispose of it in compliance with Federal, State, and local requirements for solid waste disposal. A Subtitle D RCRA permitted landfill shall be the minimum acceptable off-site solid waste disposal option. The Contractor shall verify that the selected transporters and disposal facilities have the necessary permits and licenses to operate. The Contractor shall comply with Federal, State, and local laws and regulations pertaining to the use of landfill areas.

3.6.2 Chemicals and Chemical Wastes

Chemicals shall be dispensed ensuring no spillage to the ground or water. Periodic inspections of dispensing areas to identify leakage and initiate corrective action shall be performed and documented. This documentation will be periodically reviewed by the Government. Chemical waste shall be collected in corrosion resistant, compatible containers. Collection drums shall be monitored and removed to a staging or storage area when contents are within 6 inches of the top. Wastes shall be classified, managed, stored, and disposed of in accordance with Federal, State, and local laws and regulations.

3.6.3 Contractor Generated Hazardous Wastes/Excess Hazardous Materials

Hazardous wastes are defined in 40 CFR 261, or are as defined by applicable State and local regulations. Hazardous materials are defined in 49 CFR 171 - 178. The Contractor shall, at a minimum, manage and store hazardous waste in compliance with 40 CFR 262 and shall manage and store hazardous waste in accordance with the hazardous waste management plan. The Contractor shall take sufficient measures to prevent spillage of hazardous and toxic materials during dispensing. The Contractor shall segregate hazardous waste from other materials and wastes, shall protect it from the weather by placing it in a safe covered location, and shall take precautionary measures such as berming or other appropriate measures against accidental spillage. The Contractor shall be responsible for storage, describing, packaging, labeling, marking, and placarding of hazardous waste and hazardous material in accordance with 49 CFR 171 - 178, State, and local laws and regulations. The Contractor shall transport Contractor generated hazardous waste off Government property within 90 days in accordance with the Environmental Protection Agency and the Department of Transportation laws and regulations. The Contractor shall dispose of hazardous waste in compliance with Federal, State and local laws and regulations. Spills of hazardous or toxic materials shall be immediately reported to the Contracting Officer and the Facility Environmental Office. Cleanup and cleanup costs due to spills shall be the Contractor's responsibility. The disposition of Contractor generated hazardous waste and excess hazardous materials are the Contractor's responsibility. The Contractor shall coordinate the disposition of hazardous waste with the

Project Office's Hazardous Waste Manager and the Contracting Officer.

3.6.4 Fuel and Lubricants

Storage, fueling and lubrication of equipment and motor vehicles shall be conducted in a manner that affords the maximum protection against spill and evaporation. Fuel, lubricants and oil shall be managed and stored in accordance with all Federal, State, Regional, and local laws and regulations. Used lubricants and used oil to be discarded shall be stored in marked corrosion-resistant containers and recycled or disposed in accordance with 40 CFR 279, State, and local laws and regulations. Storage of fuel on the project site shall be accordance with all Federal, State, and local laws and regulations.

3.6.5 Waste Water

Disposal of waste water shall be as specified below.

a. Waste water from construction activities, such as onsite material processing, concrete curing, foundation and concrete clean-up, water used in concrete trucks, forms, etc. shall not be allowed to enter water ways or to be discharged prior to being treated to remove pollutants. The Contractor shall dispose of the construction related waste water off-Government property in accordance with all Federal, State, Regional and Local laws and regulations.

b. For discharge of ground water, the Contractor shall obtain a State or Federal permit specific for pumping and discharging ground water prior to surface discharging.

c. Water generated from the flushing of lines after disinfection or disinfection in conjunction with hydrostatic testing discharged into the sanitary sewer with prior approval and/or notification to the Waste Water Treatment Plant's Operator.

3.7 RECYCLING AND WASTE MINIMIZATION

The Contractor shall participate in State and local government sponsored recycling programs. The Contractor is further encouraged to minimize solid waste generation throughout the duration of the project.

3.8 NON-HAZARDOUS SOLID WASTE DIVERSION REPORT

The Contractor shall maintain an inventory of non-hazardous solid waste diversion and disposal of construction and demolition debris. The Contractor shall submit a report to 1 CES/CEVP through the Contracting Officer on the first working day after each fiscal year quarter, starting the first quarter that non-hazardous solid waste has been generated. The following shall be included in the report:

a. Construction and Demolition (C&D) Debris Disposed = in cubic yards or tons, as appropriate.

b. Construction and Demolition (C&D) Debris Recycled = in cubic yards or tons, as appropriate.

c. Total C&D Debris Generated = in cubic yards or tons, as appropriate.

d. Waste Sent to Waste-To-Energy Incineration Plant (This amount should not be included in the recycled amount) = in cubic yards or tons, as appropriate.

3.9 HISTORICAL, ARCHAEOLOGICAL, AND CULTURAL RESOURCES

Existing historical, resources within the Contractor's work area are shown on the drawings. The Contractor shall protect these resources and shall be responsible for their preservation during the life of the Contract. If during excavation or other construction activities any previously unidentified or unanticipated historical, archaeological, and cultural resources are discovered or found, all activities that may damage or alter such resources shall be temporarily suspended. Resources covered by this paragraph include but are not limited to: any human skeletal remains or burials; artifacts; shell, midden, bone, charcoal, or other deposits; rock or coral alignments, pavings, wall, or other constructed features; and any indication of agricultural or other human activities. Upon such discovery or find, the Contractor shall immediately notify the Contracting Officer so that the appropriate authorities may be notified and a determination made as to their significance and what, if any, special disposition of the finds should be made. The Contractor shall cease all activities that may result in impact to or the destruction of these resources. The Contractor shall secure the area and prevent employees or other persons from trespassing on, removing, or otherwise disturbing such resources.

3.10 BIOLOGICAL RESOURCES

The Contractor shall minimize interference with, disturbance to, and damage to fish, wildlife, and plants including their habitat. The Contractor shall be responsible for the protection of threatened and endangered animal and plant species including their habitat in accordance with Federal, State, Regional, and local laws and regulations.

3.11 INTEGRATED PEST MANAGEMENT

In order to minimize impacts to existing fauna and flora, the Contractor, through the Contracting Officer, shall coordinate with the Installation Pest Management Coordinator (IPMC) at the earliest possible time prior to pesticide application. The Contractor shall discuss integrated pest management strategies with the IPMC and receive concurrence from the IPMC through the COR prior to the application of any pesticide associated with these specifications. Installation Project Office Pest Management personnel shall be given the opportunity to be present at all meetings concerning treatment measures for pest or disease control and during application of the pesticide. The use and management of pesticides are regulated under 40 CFR 152 - 186.

3.11.1 Pesticide Delivery and Storage

Pesticides shall be delivered to the site in the original, unopened containers bearing legible labels indicating the EPA registration number and the manufacturer's registered uses. Pesticides shall be stored according to manufacturer's instructions and under lock and key when unattended.

3.11.2 Qualifications

For the application of pesticides, the Contractor shall use the services of

a subcontractor whose principal business is pest control. The subcontractor shall be licensed and certified in the state where the work is to be performed.

3.11.3 Pesticide Handling Requirements

The Contractor shall formulate, treat with, and dispose of pesticides and associated containers in accordance with label directions and shall use the clothing and personal protective equipment specified on the labeling for use during all phases of the application. Material Safety Data Sheets (MSDS)shall be available for all pesticide products.

3.11.4 Application

Pesticides shall be applied by a State Certified Pesticide Applicator in accordance with EPA label restrictions and recommendation. The Certified Applicator shall wear clothing and personal protective equipment as specified on the pesticide label. Water used for formulating shall only come from locations designated by the Contracting Officer. The Contractor shall not allow the equipment to overflow. Prior to application of pesticide, all equipment shall be inspected for leaks, clogging, wear, or damage and shall be repaired prior to being used.

3.12 PREVIOUSLY USED EQUIPMENT

The Contractor shall clean all previously used construction equipment prior to bringing it onto the project site. The Contractor shall ensure that the equipment is free from soil residuals, egg deposits from plant pests, noxious weeds, and plant seeds. The Contractor shall consult with the USDA jurisdictional office for additional cleaning requirements.

3.13 MAINTENANCE OF POLLUTION FACILITIES

The Contractor shall maintain permanent and temporary pollution control facilities and devices for the duration of the contract or for that length of time construction activities create the particular pollutant.

3.14 MILITARY MUNITIONS

In the event the Contractor discovers or uncovers military munitions as defined in 40 CFR 260, the Contractor shall immediately stop work in that area and immediately inform the Contracting Officer.

3.15 TRAINING OF CONTRACTOR PERSONNEL

The Contractor's personnel shall be trained in all phases of environmental protection and pollution control. The Contractor shall conduct environmental protection/pollution control meetings for all Contractor personnel prior to commencing construction activities. Additional meetings shall be conducted for new personnel and when site conditions change. The training and meeting agenda shall include: methods of detecting and avoiding pollution; familiarization with statutory and contractual pollution standards; installation and care of devices, vegetative covers, and instruments required for monitoring purposes to ensure adequate and continuous environmental protection/pollution control; anticipated hazardous or toxic chemicals or wastes, and other regulated contaminants; recognition and protection of archaeological sites, artifacts, wetlands, and endangered species and their habitat that are known to be in the area.

3.16 CONTAMINATED MEDIA MANAGEMENT

Contaminated environmental media consisting of, but not limited to, ground water, soils, and sediments shall be managed in accordance with all federal, state, and local laws and regulations.

3.17 POST CONSTRUCTION CLEANUP

The Contractor shall clean up all areas used for construction in accordance with Contract Clause: "Cleaning Up". The Contractor shall, unless otherwise instructed in writing by the Contracting Officer, obliterate all signs of temporary construction facilities such as haul roads, work area, structures, foundations of temporary structures, stockpiles of excess or waste materials, and other vestiges of construction prior to final acceptance of the work. The disturbed area shall be graded, filled and the entire area seeded unless otherwise indicated.

-- End of Section --

SECTION 01356

STORM WATER POLLUTION PREVENTION MEASURES
08/96

PART 1 GENERAL

1.1 REFERENCES

The publications listed below form a part of this specification to the extent referenced. The publications are referred to in the text by basic designation only.

AMERICAN SOCIETY FOR TESTING AND MATERIALS (ASTM)

ASTM D 4439	(1997) Standard Terminology for Geosynthetics
ASTM D 4491	(1996) Water Permeability of Geotextiles by Permittivity
ASTM D 4533	(1991; R 1996) Trapezoid Tearing Strength of Geotextiles
ASTM D 4632	(1991; R 1996)) Grab Breaking Load and Elongation of Geotextiles
ASTM D 4751	(1995) Determining Apparent Opening Size of a Geotextile
ASTM D 4873	(1995) Identification, Storage, and Handling of Geosynthetic Rolls

1.2 GENERAL

The Contractor shall implement the storm water pollution prevention measures specified in this section in a manner which will meet the requirements of Section 01355 ENVIRONMENTAL PROTECTION, and the requirements of the National Pollution Discharge Elimination System (NPDES) Stormwater Pollution Plan which may be reviewed at the Base Civil Engineers Environmental Office.

1.3 SUBMITTALS

Government approval is required for submittals with a "G" designation; submittals not having a "G" designation are for information only. When used, a designation following the "G" designation identifies the office that will review the submittal for the Government. The following shall be submitted in accordance with Section 01330 SUBMITTAL PROCEDURES:

SD-07 Certificates

Mill Certificate or Affidavit

Certificate attesting that the Contractor has met all specified requirements.

1.4 EROSION AND SEDIMENT CONTROLS

The controls and measures required by the Contractor are described below.

1.4.1 Stabilization Practices

The stabilization practices to be implemented shall include hydroseeding, temporary seeding, mulching, geotextiles, sod stabilization, erosion control matts, protection of trees. On his daily CQC Report, the Contractor shall record the dates when the major grading activities occur, (e.g., clearing and grubbing, excavation, embankment, and grading); when construction activities temporarily or permanently cease on a portion of the site; and when stabilization practices are initiated. Except as provided in paragraphs UNSUITABLE CONDITIONS and NO ACTIVITY FOR LESS THAN 21 DAYS, stabilization practices shall be initiated as soon as practicable, but no more than 14 days, in any portion of the site where construction activities have temporarily or permanently ceased.

1.4.1.1 Unsuitable Conditions

Where the initiation of stabilization measures by the fourteenth day after construction activity temporarily or permanently ceases is precluded by unsuitable conditions caused by the weather, stabilization practices shall be initiated as soon as practicable after conditions become suitable.

1.4.1.2 No Activity for Less Than 21 Days

Where construction activity will resume on a portion of the site within 21 days from when activities ceased (e.g., the total time period that construction activity is temporarily ceased is less than 21 days), then stabilization practices do not have to be initiated on that portion of the site by the fourteenth day after construction activity temporarily ceased.

1.4.2 Structural Practices

Structural practices shall be implemented to divert flows from exposed soils, temporarily store flows, or otherwise limit runoff and the discharge of pollutants from exposed areas of the site. Structural practices shall be implemented in a timely manner during the construction process to minimize erosion and sediment runoff. Structural practices shall include the following devices. Location and details of installation and construction are shown on the drawings.

1.4.2.1 Silt Fences

The Contractor shall provide silt fences as a temporary structural practice to minimize erosion and sediment runoff. Silt fences shall be properly installed to effectively retain sediment immediately after completing each phase of work where erosion would occur in the form of sheet and rill erosion (e.g. clearing and grubbing, excavation, embankment, and grading). Silt fences shall be installed in the locations indicated on the drawings or as follows. Final removal of silt fence barriers shall be upon approval by the Contracting Officer.

a. Along the downhill perimeter edge of all areas disturbed.

b. Along the top of the slope or top bank of drainage ditches, channels, swales, etc. that traverse disturbed areas.

c. Along the toe of all cut slopes and fill slopes of the construction areas.

d. Perpendicular to the flow in the bottom of existing drainage ditches, channels, swales, etc. that traverse disturbed areas or carry runoff from disturbed areas. Rows shall be spaced a maximum of 30 feet apart.

e. Perpendicular to the flow in the bottom of new drainage ditches, channels, and swales. Rows shall be spaced a maximum of 30 feet apart.

f. At the entrance to culverts that receive runoff from disturbed areas.

PART 2 PRODUCTS

2.1 COMPONENTS FOR SILT FENCES

2.1.1 Filter Fabric

The geotextile shall comply with the requirements of ASTM D 4439, and shall consist of polymeric filaments which are formed into a stable network such that filaments retain their relative positions. The filament shall consist of a long-chain synthetic polymer composed of at least 85 percent by weight of ester, propylene, or amide, and shall contain stabilizers and/or inhibitors added to the base plastic to make the filaments resistance to deterioration due to ultraviolet and heat exposure. Synthetic filter fabric shall contain ultraviolet ray inhibitors and stabilizers to provide a minimum of six months of expected usable construction life at a temperature range of 0 to 120 degrees F. The filter fabric shall meet the following requirements:

FILTER FABRIC FOR SILT SCREEN FENCE

PHYSICAL PROPERTY	TEST PROCEDURE	STRENGTH REQUIREMENT
Grab Tensile	ASTM D 4632	100 lbs. min.
Elongation (%)		30 % max.
Trapezoid Tear	ASTM D 4533	55 lbs. min.
Permittivity	ASTM D 4491	0.2 sec-1
AOS (U.S. Std Sieve)	ASTM D 4751	20-100

2.1.2 Silt Fence Stakes and Posts

The Contractor may use either wooden stakes or steel posts for fence construction. Wooden stakes utilized for silt fence construction, shall have a minimum cross section of 2 inches by 2 inches when oak is used and 4 inches by 4 inches when pine is used, and shall have a minimum length of 5 feet. Steel posts (standard "U" or "T" section) utilized for silt fence construction, shall have a minimum weight of 1.33 pounds per linear foot and a minimum length of 5 feet.

2.1.3 Mill Certificate or Affidavit

A mill certificate or affidavit shall be provided attesting that the fabric and factory seams meet chemical, physical, and manufacturing requirements

specified above. The mill certificate or affidavit shall specify the actual Minimum Average Roll Values and shall identify the fabric supplied by roll identification numbers. The Contractor shall submit a mill certificate or affidavit signed by a legally authorized official from the company manufacturing the filter fabric.

2.1.4 Identification Storage and Handling

Filter fabric shall be identified, stored and handled in accordance with ASTM D 4873.

PART 3 EXECUTION

3.1 INSTALLATION OF SILT FENCES

Silt fences shall extend a minimum of 16 inches above the ground surface and shall not exceed 34 inches above the ground surface. Filter fabric shall be from a continuous roll cut to the length of the barrier to avoid the use of joints. When joints are unavoidable, filter fabric shall be spliced together at a support post, with a minimum 6 inch overlap, and securely sealed. A trench shall be excavated approximately 4 inches wide and 4 inches deep on the upslope side of the location of the silt fence. The 4-inch by 4-inch trench shall be backfilled and the soil compacted over the filter fabric. Silt fences shall be removed upon approval by the Contracting Officer.

3.2 MAINTENANCE

The Contractor shall maintain the temporary and permanent vegetation, erosion and sediment control measures, and other protective measures in good and effective operating condition by performing routine inspections to determine condition and effectiveness, by restoration of destroyed vegetative cover, and by repair of erosion and sediment control measures and other protective measures. The following procedures shall be followed to maintain the protective measures.

3.2.1 Silt Fence Maintenance

Silt fences shall be inspected in accordance with paragraph INSPECTIONS. Any required repairs shall be made promptly. Close attention shall be paid to the repair of damaged silt fence resulting from end runs and undercutting. Should the fabric on a silt fence decompose or become ineffective, and the barrier is still necessary, the fabric shall be replaced promptly. Sediment deposits shall be removed when deposits reach one-third of the height of the barrier. When a silt fence is no longer required, it shall be removed. The immediate area occupied by the fence and any sediment deposits shall be shaped to an acceptable grade. The areas disturbed by this shaping shall be sodded in accordance with Section 02922 SODDING.

3.3 INSPECTIONS

3.3.1 General

The Contractor shall inspect disturbed areas of the construction site, areas used for storage of materials that are exposed to precipitation that have not been finally stabilized, stabilization practices, structural practices, other controls, and area where vehicles exit the site at least once every seven (7) calendar days and within 24 hours of the end of any

storm that produces 0.5 inches or more rainfall at the site. Where sites have been finally stabilized, such inspection shall be conducted at least once every month.

3.3.2 Inspections Details

Disturbed areas and areas used for material storage that are exposed to precipitation shall be inspected for evidence of, or the potential for, pollutants entering the drainage system. Erosion and sediment control measures identified in the Storm Water Pollution Prevention Plan shall be observed to ensure that they are operating correctly. Discharge locations or points shall be inspected to ascertain whether erosion control measures are effective in preventing significant impacts to receiving waters. Locations where vehicles exit the site shall be inspected for evidence of offsite sediment tracking.

3.3.3 Inspection Reports

For each inspection conducted, the Contractor shall prepare a report summarizing the scope of the inspection, name(s) and qualifications of personnel making the inspection, the date(s) of the inspection, major observations relating to the implementation of the Storm Water Pollution Prevention Plan, maintenance performed, and actions taken. The report shall be furnished to the Contracting Officer within 24 hours of the inspection as a part of the Contractor's daily CQC REPORT. A copy of the inspection report shall be maintained on the job site.

-- End of Section --

SECTION 01420

SOURCES FOR REFERENCE PUBLICATIONS
02/02

PART 1 GENERAL

1.1 REFERENCES

Various publications are referenced in other sections of the specifications to establish requirements for the work. These references are identified in each section by document number, date and title. The document number used in the citation is the number assigned by the standards producing organization, (e.g. ASTM B 564 Nickel Alloy Forgings). However, when the standards producing organization has not assigned a number to a document, an identifying number has been assigned for reference purposes.

1.2 ORDERING INFORMATION

The addresses of the standards publishing organizations whose documents are referenced in other sections of these specifications are listed below, and if the source of the publications is different from the address of the sponsoring organization, that information is also provided. Documents listed in the specifications with numbers which were not assigned by the standards producing organization should be ordered from the source by title rather than by number. The designations "AOK" and "LOK" are for administrative purposes and should not be used when ordering publications.

ACI INTERNATIONAL (ACI)
P.O. Box 9094
Farmington Hills, MI 48333-9094
Ph: 248-848-3700
Fax: 248-848-3701
Internet: http://www.aci-int.org
AOK 5/01
LOK 2/01

AIR CONDITIONING AND REFRIGERATION INSTITUTE (ARI)
4301 North Fairfax Dr., Suite 425
ATTN: Pubs Dept.
Arlington, VA 22203
Ph: 703-524-8800
Fax: 703-528-3816
E-mail: ari@ari.org
Internet: http://www.ari.org
AOK 5/01
LOK 2/01

AIR CONDITIONING CONTRACTORS OF AMERICA (ACCA)
2800 Shirlington Road, Suite 300
Arlington, VA 22206
Ph: 703-575-4477
FAX: 703-575-4449
Internet: http://www.acca.org
AOK 5/01
LOK 6/00

AIR DIFFUSION COUNCIL (ADC)
104 So. Michigan Ave., No. 1500
Chicago, IL 60603
Ph: 312-201-0101
Fax: 312-201-0214
Internet: http://www.flexibleduct.org
AOK 5/01
LOK 6/00

AIR MOVEMENT AND CONTROL ASSOCIATION (AMCA)
30 W. University Dr.
Arlington Heights, IL 60004-1893
Ph: 847-394-0150
Fax: 847-253-0088
Internet: http://www.amca.org
AOK 5/01
LOK 2/01

ALUMINUM ASSOCIATION (AA)

900 19th Street N.W.
Washington, DC 20006
Ph: 202-862-5100
Fax: 202-862-5164
Internet: http://www.aluminum.org
AOK 5/01
LOK 2/01

AMERICAN ARCHITECTURAL MANUFACTURERS ASSOCIATION (AAMA)
1827 Walden Ofc. Sq.
Suite 104
Schaumburg, IL 60173-4268
Ph: 847-303-5664
Fax: 847-303-5774
Internet: http://www.aamanet.org
AOK 5/01
LOK 2/01

AMERICAN ASSOCIATION OF STATE HIGHWAY AND TRANSPORTATION OFFICIALS (AASHTO)
444 N. Capital St., NW, Suite 249
Washington, DC 20001
Ph: 800-231-3475 202-624-5800
Fax: 800-525-5562 202-624-5806
Internet: http://www.transportation.org
AOK 5/01
LOK 2/01

AMERICAN ASSOCIATION OF TEXTILE CHEMISTS AND COLORISTS (AATCC)
P.O. Box 12215
Research Triangle Park, NC 27709-2215
Ph: 919-549-8141
Fax: 919-549-8933
Internet: http://www.aatcc.org
AOK 5/01
LOK 2/01

AMERICAN BEARING MANUFACTURERS ASSOCIATION (ABMA)
2025 M Street, NW, Suite 800

Washington, DC 20036
Ph: 202-429-5155
Fax: 202-828-6042
Internet: http://www.abma-dc.org
AOK 5/01
LOK 2/01

AMERICAN BOILER MANUFACTURERS ASSOCIATION (ABMA)
4001 North 9th Street, Suite 226
Arlington, VA 22203-1900
Ph: 703-522-7350
Fax: 703-522-2665
Internet: http://www.abma.com
AOK 5/01
LOK 2/01

AMERICAN CONCRETE PIPE ASSOCIATION (ACPA)
222 West Las Colinas Blvd., Suite 641
Irving, TX 75039-5423
Ph: 972-506-7216
Fax: 972-506-7682
Internet: http://www.concrete-pipe.org
e-mail: info@concrete-pipe.org
AOK 5/01
LOK 6/00

AMERICAN CONFERENCE OF GOVERNMENTAL INDUSTRIAL HYGIENISTS (ACGIH)
1330 Kemper Meadow Dr.
Suite 600
Cincinnati, OH 45240
Ph: 513-742-2020
Fax: 513-742-3355
Internet: http://www.acgih.org
E-mail: pubs@acgih.org
AOK 5/01
LOK 2/01

AMERICAN FOREST & PAPER ASSOCIATION (AF&PA)
American Wood Council
ATTN: Publications Dept.
1111 Nineteenth St. NW, Suite 800
Washington, DC 20036
Ph: 800-294-2372 or 202-463-2700
Fax: 202-463-2471
Internet: http://www.forestprod.org/awc/
AOK 5/01
LOK 6/00

AMERICAN GAS ASSOCIATION (AGA)
400 N. Capitol St. N.W.Suite 450
Washington, D.C. 20001
Ph: 202-824-7000
Fax: 202-824-7115
Internet: http://www.aga.org
AOK 5/01
LOK 2/01

AMERICAN GAS ASSOCIATION LABORATORIES (AGAL)
400 N. Capitol St. N.W.Suite 450

Washington, D.C. 20001
Ph: 202-824-7000
Fax: 202-824-7115
Internet: http://www.aga.org
AOK 10/00
LOK 0/00

AMERICAN GEAR MANUFACTURERS ASSOCIATION (AGMA)
1500 King St., Suite 201
Alexandria, VA 22314-2730
Ph: 703-684-0211
Fax: 703-684-0242
Internet: http://www.agma.org
AOK 5/01
LOK 3/01

AMERICAN HARDBOARD ASSOCIATION (AHA)
1210 W. Northeast Highway
Palatine, IL 60067
Ph: 847-934-8800
Fax: 847-934-8803

AMERICAN INSTITUTE OF STEEL CONSTRUCTION (AISC)
One East Wacker Dr., Suite 3100
Chicago, IL 60601-2001
Ph: 312-670-2400
Publications: 800-644-2400
Fax: 312-670-5403
Internet: http://www.aisc.org
AOK 5/01
LOK 3/01

AMERICAN INSTITUTE OF TIMBER CONSTRUCTION (AITC)
7012 So. Revere Parkway, Suite 140
Englewood, CO 80112
Ph: 303-792-9559
Fax: 303-792-0669
Internet: http://www.aitc-glulam.org
AOK 5/01
LOK 3/01

AMERICAN IRON AND STEEL INSTITUTE (AISI)
1101 17th St., NW Suite 1300
Washington, DC 20036
Ph: 202-452-7100
Internet: http://www.steel.org
AOK 5/01
LOK 3/01

AMERICAN NATIONAL STANDARDS INSTITUTE (ANSI)
1819 L Street, NW, 6th Floor
Washington, DC 20036
Ph: 202-293-8020
Fax: 202-293-9287
Internet: http://www.ansi.org/

Note --- Documents beginning with the letter "S" can be ordered from:

Acoustical Society of America
Standards and Publications Fulfillment Center
P. O. Box 1020
Sewickley, PA 15143-9998
Ph: 412-741-1979
Fax: 412-741-0609
Internet: http://asa.aip.org
General e-mail: asa@aip.org
Publications e-mail: asapubs@abdintl.com
AOK 5/01
LOK 6/00

AMERICAN NURSERY AND LANDSCAPE ASSOCIATION (ANLA)
1250 I St., NW, Suite 500
Washington, DC 20005-3922
Ph: 202-789-2900
FAX: 202-789-1893
Internet: http://www.anla.org
AOK 5/01
LOK 3/01

AMERICAN PETROLEUM INSTITUTE (API)
1220 L St., NW
Washington, DC 20005-4070
Ph: 202-682-8000
Fax: 202-682-8223
Internet: http://www.api.org
AOK 5/01
LOK 3/01

AMERICAN PUBLIC HEALTH ASSOCIATION (APHA)
800 I Street, NW
Washington, DC 20001
PH: 202-777-2742
FAX: 202-777-2534
Internet: http://www.apha.org
AOK 6/01
LOK 0/00

AMERICAN RAILWAY ENGINEERING & MAINTENANCE-OF-WAY ASSOCIATION (AREMA)
8201 Corporate Dr., Suite 1125
Landover, MD 20785-2230
Ph: 301-459-3200
Fax: 301-459-8077
Internet: http://www.arema.org
AOK 5/01
LOK 3/01

AMERICAN SOCIETY FOR NONDESTRUCTIVE TESTING (ASNT)
1711 Arlingate Lane
P.O. Box 28518
Columbus, OH 43228-0518
Ph: 800-222-2768
Fax: 614-274-6899
Internet: http://www.asnt.org
AOK 5/01
LOK 6/00

AMERICAN SOCIETY FOR QUALITY (ASQ)
600 North Plankinton Avenue
Milwaukee, WI 53202-3005
Ph: 800-248-1946
Fax: 414-272-1734
Internet: http://www.asq.org
AOK 5/01
LOK 3/01

AMERICAN SOCIETY FOR TESTING AND MATERIALS (ASTM)
100 Barr Harbor Drive
West Conshohocken, PA 19428-2959
Ph: 610-832-9585
Fax: 610-832-9555
Internet: http://www.astm.org
AOK 5/01
LOK 3/01

AMERICAN SOCIETY OF CIVIL ENGINEERS (ASCE)
1801 Alexander Bell Drive
Reston, VA 20191-4400
Ph: 703-295-6300 - 800-548-2723
Fax: 703-295-6222
Internet: http://www.asce.org
e-mail: marketing@asce.org
AOK 5/01
LOK 3/01

AMERICAN SOCIETY OF HEATING, REFRIGERATING AND AIR-CONDITIONING ENGINEERS (ASHRAE)
1791 Tullie Circle, NE
Atlanta, GA 30329
Ph: 800-527-4723 or 404-636-8400
Fax: 404-321-5478
Internet: http://www.ashrae.org
AOK 5/01
LOK 3/01

AMERICAN SOCIETY OF SANITARY ENGINEERING (ASSE)
901 Canterbury, Suite A
Westlake, OH 44145
Ph: 440-835-3040
Fax: 440-835-3488
E-mail: asse@ix.netcom.com
Internet: http://www.asse-plumbing.org
AOK 5/01
LOK 3/01

AMERICAN WATER WORKS ASSOCIATION(AWWA)
6666 West Quincy
Denver, CO 80235
Ph: 800-926-7337 - 303-794-7711
Fax: 303-794-7310
Internet: http://www.awwa.org
AOK 5/01
LOK 3/01

AMERICAN WELDING SOCIETY (AWS)
550 N.W. LeJeune Road

Miami, FL 33126
Ph: 800-443-9353 - 305-443-9353
Fax: 305-443-7559
Internet: http://www.amweld.org
AOK 5/01
LOK 3/01

AMERICAN WOOD-PRESERVERS' ASSOCIATION (AWPA)
P.O. Box 5690
Grandbury, TX 76049-0690
Ph: 817-326-6300
Fax: 817-326-6306
Internet: http://www.awpa.com
AOK 5/01
LOK 3/01

APA - THE ENGINEERED WOOD ASSOCIATION (APA)
P.O.Box 11700
Tacoma, WA 98411-0700
Ph: 253-565-6600
Fax: 253-565-7265
Internet: http://www.apawood.org
AOK 5/01
LOK 6/00

ARCHITECTURAL & TRANSPORTATION BARRIERS COMPLIANCE BOARD (ATBCB)

The Access Board
1331 F Street, NW, Suite 1000
Washington, DC 20004-1111
PH: 202-272-5434
FAX: 202-272-5447
Internet: http://www.access-board.gov
AOK 6/01
LOK 0/00

ARCHITECTURAL WOODWORK INSTITUTE (AWI)
1952 Isaac Newton Square West
Reston, VA 20190
Ph: 703-733-0600
Fax: 703-733-0584
Internet: http://www.awinet.org
AOK 5/01
LOK 6/00

ASBESTOS CEMENT PIPE PRODUCERS ASSOCIATION (ACPPA)
PMB114-1745 Jefferson Davis Highway
Arlington, VA 22202
Ph: 514-861-1153
Fax: 514-861-1152
Internet: None
AOK 11/01
LOK 0/00

ASM INTERNATIONAL (ASM)
9639 Kinsman Road
Materials Park, OH 44073-0002
Ph: 440-338-5151
Fax: 440-338-4634

Internet: http://www.asm-intl.org
Order Publications From:
ASM International
ATTN: MSC/Book Order
P.O. Box 473
Novelty, OH 44072-9901
AOK 5/01
LOK 0/00

ASME INTERNATIONAL (ASME)
Three Park Avenue
New York, NY 10016-5990
Ph: 212-591-7722
Fax: 212-591-7674
Internet: http://www.asme.org
AOK 5/01
LOK 6/00

ASPHALT INSTITUTE (AI)
Research Park Dr.
P.O. Box 14052
Lexington, KY 40512-4052
Ph: 859-288-4960
Fax: 859-288-4999
Internet: http://www.asphaltinstitute.org
AOK 5/01
LOK 6/00

ASSOCIATED AIR BALANCE COUNCIL (AABC)
1518 K St., NW, Suite 503
Washington, DC 20005
Ph: 202-737-0202
Fax: 202-638-4833
Internet: http://www.aabchq.com
E-mail: aabchq@aol.com
AOK 5/01
LOK 6/00

ASSOCIATION FOR THE ADVANCEMENT OF MEDICAL INSTRUMENTATION (AAMI)
1110 N. Glebe Rd., Suite 220
Arlington, VA 22201-5762
Ph: 703-525-4890
Fax: 703-276-0793
Internet: http://www.aami.org
AOK 5/01
LOK 6/00

ASSOCIATION OF EDISON ILLUMINATING COMPANIES (AEIC)
600 No. 18th St.
P.O. Box 2641
Birmingham, AL 35291
Ph: 205-257-2530
Fax: 205-257-2540
Internet: http://www.aeic.org
AOK 5/01
LOK 6/00

ASSOCIATION OF HOME APPLIANCE MANUFACTURERS (AHAM)
1111 19th St. NW., Suite 402

Washington, DC 20036
Ph: 202-872-5955
Fax: 202-872-9354
Internet: http://www.aham.org
AOK 5/01
LOK 6/00

BIFMA INTERNATIONAL (BIFMA)
2680 Horizon Drive SE, Suite A-1
Grand Rapids, MI 49546-7500
Ph: 616-285-3963
Fax: 616-285-3765
Internet: http://www.bifma.com
E-mail: email@bifma.com
AOK 5/01
LOK 6/00

BIOCYCLE, JOURNAL OF COMPOSTING AND RECYCLING (BIOCYCLE)
The JG Press Inc.
419 State Avenue
Emmaus PA. 18049
Ph: 610-967-4135
Internet: http://www.biocycle.net
E-mail: jgpress@jgpress.com
AOK 5/01
LOK 0/00

BRICK INDUSTRY ASSOCIATION (BIA)
11490 Commerce Park Dr., Suite 308
Reston, VA 22091-1525
Ph: 703-620-0010
Fax: 703-620-3928
Internet: http://www.brickinfo.org
AOK 5/01
LOK 6/00

BRITISH STANDARDS INSTITUTE (BSI)
389 Chiswick High Road
London W4 4AL
United Kingdom
Phone: +44 (0)20 8996 9000
Fax: +44 (0)20 8996 7400
Email: Info@bsi-global.com
Website: http://www.bsi-global.com
AOK 8/01
LOK 6/01

BUILDERS HARDWARE MANUFACTURERS ASSOCIATION (BHMA)
355 Lexington Ave.
17th floor
New York, NY 10017-6603
Ph: 212-297-2122
Fax: 212-370-9047
Internet: http://www.buildershardware.com
AOK 5/01
LOK 6/00

CARPET AND RUG INSTITUTE (CRI)
310 Holiday Ave.

Dalton, GA 30720
P.O. Box 2048
Dalton, GA 30722-2048
Ph: 706-278-0232
Fax: 706-278-8835
Internet: http://www.carpet-rug.com
AOK 5/01
LOK 6/00

CAST IRON SOIL PIPE INSTITUTE (CISPI)
5959 Shallowford Rd., Suite 419
Chattanooga, TN 37421
Ph: 423-892-0137
Fax: 423-892-0817
Internet: http://www.cispi.org
AOK 5/01
LOK 6/00

CEILINGS & INTERIOR SYSTEMS CONSTRUCTION ASSOCIATION (CISCA)
1500 Lincoln Highway, Suite 202
St. Charles, IL 60174
Ph: 630-584-1919
Fax: 630-584-2003
Internet: http://www.cisca.org
AOK 5/01
LOK 6/00

CENTERS FOR DISEASE CONTROL AND PREVENTION (CDC)

1600 Clifton Road
Atlanta, GA 30333
PH: 404-639-3534
FAX:
Internet: http://www.cdc.gov
AOK 6/01
LOK 0/00

CHEMICAL FABRICS & FILM ASSOCIATION (CFFA)

1300 Sumner Ave.
Cleveland OH 44115-2851
PH: 216-241-7333
FAX: 216-241-0105
Internet: http://www.chemicalfabricsandfilm.com/welcome.htm
AOK 6/01

CHLORINE INSTITUTE (CI)
2001 L St., NW Suite 506
Washington, DC 20036
Ph: 202-775-2790
Fax: 202-223-7225
Internet: http://www.cl2.com
AOK 5/01
LOK 6/00

COMPRESSED AIR AND GAS INSTITUTE (CAGI)

1300 Sumner Ave.
Cleveland OH 44115-2851

PH: 216-241-7333
FAX: 216-241-0105
Internet: http://www.cagi.org/welcome.htm
AOK 6/01

COMPRESSED GAS ASSOCIATION (CGA)
4221 Walney Road, 5th Floor
Chantilly, VA 20151-2923
Ph: 703-788-2700
Fax: 703-961-1831
Internet: http://www.cganet.com
e-mail: Customer_Service@cganet.com
AOK 9/01
LOK 6/00

CONCRETE REINFORCING STEEL INSTITUTE (CRSI)
933 N. Plum Grove Rd.
Schaumburg, IL 60173-4758
Ph: 847-517-1200
Fax: 847-517-1206
Internet: http://www.crsi.org/
AOK 5/01
LOK 6/00

CONSUMER PRODUCT SAFETY COMMISSION (CPSC)
4330 East-West Highway
Bethesda, Maryland 20814-4408
Ph: 301-504-0990
Fx: 301-504-0124 and 301-504-0025
Internet: http://www.cpsc.gov
AOK 5/01
LOK 6/00

CONVEYOR EQUIPMENT MANUFACTURERS ASSOCIATION (CEMA)
6724 Lone Oak Blvd.
Naples, Florida 34109
Ph: 941-514-3441
Fax: 941-514-3470
Internet: http://www.cemanet.org
AOK 5/01
LOK 6/00

COOLING TECHNOLOGY INSTITUTE (CTI)
530 Wells Fargo Dr., Suite 218, Houston, TX 77090
Ph: 281-583-4087
Fax: 281-537-1721
Internet: http://www.cti.org
AOK 5/01
LOK 6/00

COPPER DEVELOPMENT ASSOCIATION (CDA)
260 Madison Ave.
New York, NY 10016
Ph: 212-251-7200
Fax: 212-251-7234
Internet: http://www.copper.org
E-mail: staff@cda.copper.org
AOK 5/01
LOK 6/00

CRANE MANUFACTURERS ASSOCIATION OF AMERICA (CMAA)
8720 Red Oak Blvd., Ste, 201
Charlotte, NC 28217 USA
Ph: 704-676-1190/800722-6832
Fx: 704-676-1199
Internet: http://www.mhia.org/psc/psc_products_cranes.cfm
AOK 6/01
LOK 0/00

DISTRICT OF COLUMBIA MUNICIPAL REGULATIONS (DCMR)

441 4th Street NW
Wachington DC 20001
PH: 202-727-1000
Internet: http://www.abfa.com/dcdocs/dcmrlist.htm
AOK 6/01

DOOR AND ACCESS SYSTEM MANUFACTURERS ASSOCIATION (DASMA)
1300 Sumner Avenue
Cleveland, OH 44115-2851
Ph: 216-241-7333
Fax: 216-241-0105
Internet: http://www.dasma.com
e-mail: dasma@dasma.com
AOK 5/01
LOK 6/00

DOOR AND HARDWARE INSTITUTE (DHI)
14150 Newbrook Dr.Suite 200
Chantilly, VA 20151-2223
Ph: 703-222-2010
Fax: 703-222-2410
Internet: http://www.dhi.org
e-mail: techdept@dhi.org
AOK 5/01
LOK 6/00

DUCTILE IRON PIPE RESEARCH ASSOCIATION (DIPRA)
245 Riverchase Parkway East, Suite 0
Birmingham, AL 35244
Ph: 205-402-8700
Fax: 205-402-8730
Internet: http://www.dipra.org
E-mail: info@dipra.org
AOK 5/01
LOK 6/00

EIFS INDUSTRY MEMBERS ASSOCIATION (EIMA)
3000 Corporate Center Drive, Suite 270
Morrow, GA 30260
Ph: 800-294-3462
Fax: 770-968-5818
Internet: http://www.eifsfacts.com
AOK 11/01
LOK 6/00

ELECTRICAL GENERATING SYSTEMS ASSOCIATION (EGSA)
1650 South Dixie Highway, Ste. 500

Boca Raton, FL 33432
Ph: 561-750-5575
Fax: 561-395-8557
Internet: http://www.egsa.org
AOK 5/01
LOK 6/00

ELECTRONIC INDUSTRIES ALLIANCE (EIA)
2500 Wilson Blvd.
Arlington, VA 22201-3834
Ph: 703-907-7500
Fax: 703-907-7501
Internet: http://www.eia.org
AOK 5/01
LOK 6/00

ENERGY RESEARCH AND DEVELOPMENT ADMINISTRATION (ERDA)
Address not available
PH:
FAX:
Internet: http://www.hr.doe.gov/seab/ytfch3.html
AOK 6/01
LOK

ENGINE MANUFACTURERS ASSOCIATION (EMA)

Two North LaSalle Street, Suite 2200
Chicago, Il 60602
PH: 312-827-8700
FAX: 312-827-8737
Internet: http://www.engine-manufacturers.org/index.cfm
AOK 6/01

EUROPEAN COMMITTEE FOR ELECTROTECHNICAL STANDARDIZATION (CENELEC)
CENELEC CS Info & Publications Department
Rue de Stassartstraat 35
1050 Brussels
Phone: + 32 2 519 68 71
Fax: + 32 2 519 69 19
Internet: http://www.cenelec.org
AOK 9/01

EXPANSION JOINT MANUFACTURERS ASSOCIATION (EJMA)
25 N Broadway
Tarrytown, NY 10591
Ph: 914-332-0040
Fax: 914-332-1541
Internet: http://www.ejma.org
AOK 5/01
LOK 6/00

FACTORY MUTUAL ENGINEERING AND RESEARCH (FM)
500 River Ridge Drive
Norwood, MA 02062
Ph: 781-255-6681
Ph: (Toll-Free): 877-364-6726
Fax: 781-255-0181
Internet: http://www.fmglobal.com
AOK 5/01

LOK 6/00

FLUID SEALING ASSOCIATION (FSA)
994 Old Eagle School Road #1019
Wayne, PA 19087
610.971.4850 (USA)
Internet: http://www.fluidsealing.com
E-mail: info@fluidsealing.com
AOK 6/01

FORESTRY SUPPLIERS (FSUP)
205 West Rankin St.
P.O. Box 8397
Jackson, MS 39284-8397
Ph: 601-354-3565
Fax: 601-292-0165
Internet: http://www.forestry-suppliers.com
AOK 5/01
LOK 6/00

FOUNDATION FOR CROSS-CONNECTION CONTROL AND HYDRAULIC RESEARCH (FCCCHR)
University of South California
Kaprielian Hall 200
Los Angeles, CA 90089-2531
Ph: 213-740-2032
Fax: 213-740-8399
Internet: http://www.usc.edu/dept/fccchr
AOK 5/01
LOK 6/00

GEOLOGICAL SOCIETY OF AMERICA (GSA)
P.O. Box 9140
Boulder, CO 80301-9140
3300 Penrose Place
Boulder, CO 80301-1806
Ph: 800-447-472-1988
Fax: 303-447-1133
Internet: http://www.geosociety.org
AOK 5/01
LOK 6/00

GEOSYNTHETIC INSTITUTE (GSI)
475 Kedron Ave.
Folsom, PA 19033-1208
Ph: 610-522-8440
Fax: 610-522-8441
Internet: http://geosynthetic-institute.org
AOK 5/01
LOK 6/00

GERMANY INSTITUTE FOR STANDARDIZATION (DIN)
BURGGRAFENSTRAáE 6
POSTFACH 11 07
10787 BERLIN
GERMANY
Internet: http://www.gsf.de
Ph: 49-30-2601-2260
Fax: 49-30-2601-1231

AOK 8/00
LOK 6/00
Order from a United States publications service.

GLASS ASSOCIATION OF NORTH AMERICA (GANA)
2945 SW Wanamaker Drive, Suite A
Topeka, KS 66614-5321
Ph: 785-271-0208
Fax: 785-271-0166
Internet: http://www.glasswebsite.com/GANA
AOK 5/01
LOK 6/00

GYPSUM ASSOCIATION (GA)
810 First St. NE, Suite 510
Washington, DC 20002
Ph: 202-289-5440
Fax: 202-289-3707
Internet: http://www.gypsum.org
AOK 5/01
LOK 6/00

HARDWOOD PLYWOOD & VENEER ASSOCIATION (HPVA)
1825 Michael Faraday Dr.
P.O. Box 2789
Reston, VA 20195-0789
Ph: 703-435-2900
Fax: 703-435-2537
Internet: http://www.hpva.org
AOK 5/01
LOK 6/00

HEAT EXCHANGE INSTITUTE (HEI)
1300 Sumner Ave
Cleveland, OH 44115-2851
Ph: 216-241-7333
Fax: 216-241-0105
Internet: http://www.heatexchange.org
email: hei@heatexchange.org
AOK 5/01
LOK 6/00

HOIST MANUFACTURERS INSTITUTE (HMI)

8720 Red Oak Blvd., Suite 201
Charlotte, NC 28217
PH: 704-676-1190
FAX: 704-676-1199
Internet: http://www.mhia.org/psc/PSC_Products_Hoists.cfm
AOK 6/01
LOK 0/00

HOLLOW METAL MANUFACTURERS ASSOCIATION (HMMA)

NAAMM Headquarters
8 South Michigan Avenue, Suite 1000
Chicago, IL 60603
PH: 312-332-0405
FAX: 312-332-0706

Internet: http://www.naamm.org/hmma.htm
AOK 6/01
LOK 0/00

NOTE --- HMMA has merged with NAAAM.

H.P. WHITE LABORATORY (HPW)
3114 Scarboro Rd.
Street, MD 21154
Ph: 410-838-6550
fax: 410-838-2802
Internet: http://www.hpwhite.com
AOK 5/01
LOK 6/00

HYDRAULIC INSTITUTE (HI)
9 Sylvan Way, Suite 180
Parsippany, NJ 07054-3802
Ph: 888-786-7744 or 973-267-9700
Fax: 973-267-9055
Internet: http://www.pumps.org
AOK 5/01
LOK 6/00

HYDRONICS INSTITUTE DIVISION OF GAMA (HYI)
35 Russo Pl.
P.O. Box 218
Berkeley Heights, NJ 07922-0218
Ph: 908-464-8200
Fax: 908-464-7818
Internet: http://www.gamanet.org/publist/hydroordr.htm
AOK 5/01
LOK 6/00

IBM CORPORATION (IBM)
Publications
P.O. Box 29570
Raleigh, NC 27626-0570
Ph: 800-879-2755, Option 1
Fax: 800-445-9269
Internet: http://www.ibm.com/shop/publications/order
AOK 5/01
LOK 6/00

ILLUMINATING ENGINEERING SOCIETY OF NORTH AMERICA (IESNA)
120 Wall St., 17th Floor
New York, NY 10005-4001
Ph: 212-248-5000
Fax: 212-248-5017
Internet: http://www.iesna.org
AOK 5/01
LOK 6/00

INDUSTRIAL FASTENERS INSTITUTE (IFI)
1717 East 9th St., Suite 1105
Cleveland, OH 44114-2879
Ph: 216-241-1482
Fax: 216-241-5901
Internet: http://www.industrial-fasteners.org

e-mail: indfast@aol.com
AOK 5/01
LOK 6/00

INSECT SCREENING WEAVERS ASSOCIATION (ISWA)
DEFUNCT in 1997
P.O. Box 1018
Ossining, NY 10562 (Can not verify address)
Ph: 914-962-9052 (Not in Service)
Fax: 914-923-3031
Internet: None found
AOK 0/00
LOK 0/00

INSTITUTE OF CLEAN AIR COMPANIES (ICAC)
1660 L St., NW, Suite 1100
Washington, DC 20036-5603
Ph: 202-457-0911
Fax: 202-331-1388
E-mail: sjenkins@icac.com
Internet: http://icac.com
AOK 5/01
LOK 6/00

INSTITUTE OF ELECTRICAL AND ELECTRONICS ENGINEERS (IEEE)
445 Hoes Ln, P. O. Box 1331
Piscataway, NJ 08855-1331
Ph: 732-981-0060 OR 800-701-4333
Fax: 732-981-9667
Internet: http://www.ieee.org
E-mail: customer.services@ieee.org
AOK 5/01
LOK 6/00

INSTITUTE OF ENVIRONMENTAL SCIENCES AND TECHNOLOGY (IEST)
940 East Northwest Highway
Mount Prospect, IL 60056
Ph: 847-255-1561
Fax: 847-255-1699
Internet: http://www.iest.org
AOK 5/01
LOK 12/00

INSULATED CABLE ENGINEERS ASSOCIATION (ICEA)
P.O. Box 440
South Yarmouth, MA 02664
Ph: 508-394-4424
Fax: 508-394-1194
E-mail:
Internet: http://www.icea.net
AOK 5/01
LOK 6/00

INTERNATIONAL APPROVAL SERVICES (IAS)
8501 East Pleasant Valley Rd.
Cleveland, OH 44131
Ph: 216-524-4990
Fax: 216-328-8118
Internet: http://www.iasapprovals.org

AOK 5/01
LOK 6/00

INTERNATIONAL ASSOCIATION OF PLUMBING AND MECHANICAL OFFICIALS (IAPMO)
20001 Walnut Dr., So.
Walnut, CA 91789-2825
Ph: 909-595-8449
Fax: 909-594-3690
Fax for Stds: 909-594-5265
Internet: http://www.iapmo.org
AOK 5/01
LOK 6/00

INTERNATIONAL CODE COUNCIL (ICC)
5203 Leesburg Pike, Suite 600
Falls Church, VA 22041
Ph: 703-931-4533
Fax: 703-379-1546
Internet: http://www.intlcode.org
AOK 5/01
LOK 6/00

INTERNATIONAL CONCRETE REPAIR INSTITUTE (ICRI)

3166 S. River Road, Suite 132
Des Plaines, IL 60018
Phone: 847-827-0830
Fax: 847-827-0832
Internet: http://www.icri.org
AOK 9/01
LOK 0/00

INTERNATIONAL CONFERENCE OF BUILDING OFFICIALS (ICBO)
5360 Workman Mill Rd.
Whittier, CA 90601-2298
Ph: 800-284-4406
Ph: 562-699-0541
Fax: 562-692-3853
Internet: http://www.icbo.org
AOK 5/01
LOK 6/00

INTERNATIONAL ELECTRICAL TESTING ASSOCIATION (NETA)

P.O. Box 687
106 Stone Street
Morrison, Colorado 80465
PH: 303-697-8441
FAX: 303-697-8431
Internet: http://www.netaworld.org
AOK 6/01

INTERNATIONAL ELECTROTECHNICAL COMMISSION (IEC)
3, rue de Varembe, P.O. Box 131
CH-1211 Geneva 20, Switzerland
Ph: 41-22-919-0211
Fax: 41-22-919-0300
Internet: http://www.iec.ch

e-mail: info@iec.ch
AOK 5/01
LOK 6/00

INTERNATIONAL GROUND SOURCE HEAT PUMP ASSOCIATION (IGSHPA)

490 Cordell South
Stillwater OK 74078-8018
PH: 800-626-4747
FAX: 405-744-5283
Internet: http://www.igshpa.okstate.edu/
AOK 6/01
LOK 0/00

INTERNATIONAL INSTITUTE OF AMMONIA REFRIGERATION (IIAR)
1110 N. Glebe Rd., Suite 250
Arlington, VA 22201
Ph: 703-312-4200
Fax: 703-312-0065
Internet: http://www.iiar.org
e-mail: iiar@iiar.org
AOK 5/01
LOK 6/00

INTERNATIONAL MUNICIPAL SIGNAL ASSOCIATION (IMSA)
P.O. Box 539
165 East Union St.
Newark, NY 14513-0539
Ph: 315-331-2182
Ph: 800-723-4672
Fax: 315-331-8205
Internet: http://www.imsasafety.org/imsapubl.htm
AOK 5/01
LOK 6/00

INTERNATIONAL ORGANIZATION FOR STANDARDIZATION (ISO)
1, rue de Varembe'
Case Postale 56
CH-1211 Geneve 20
Ph: 41-22-749-0111
Fax: 41-22-733-3430
Internet: http://www.iso.ch
e-mail: central@iso.ch
AOK 5/01
LOK 6/00

INTERNATIONAL SLURRY SURFACING ASSOCIATION (ISSA)
3 Church Circle, PMB 250
Annapolis, MD 21401
Ph: 410-267-0023
Fax: 410-267-7546
Internet: http://www.slurry.org
e-mail: krissoff@slurry.org
AOK 5/01
LOK 6/00

INTERNATIONAL TELECOMMUNICATION UNION (ITU)
Order from:
U.S. Dept of Commerce

National Technical Information Service
5285 Port Royal Road.
Springfield, VA 22161
Ph: 703-605-6040
FAX: 703-605-6887
Internet: http://www.ntis.gov

For documents not avail from Dept of Commerce:
Sales Service
International Telecommunication Union
Place des Nations
CH-1211 Geneve 20
Switzerland
E-Mail: sales@itu.ch
Ph: 41.22.730.6141
Fax: 41.22.730.5194
Internet: http://www.itu.org
AOK 5/01
LOK 6/00

IPC - ASSOCIATION CONNECTING ELECTRONICS INDUSTRIES (IPC)
2215 Sanders Rd.
Northbrook, IL 60062-6135
Ph: 847-509-9700
Fax: 847-509-9798
Internet: http://www.ipc.org
e-mail: orderipc@ipc.org
AOK 5/01
LOK 6/00

IRON & STEEL SOCIETY (ISS)
186 Thorn Hill Road
Warrendale, PA 15086-7528
Ph: 724-776-1535 Ext 1
Fax: 724-776-0430
E-Mail: dennisf@iss.org
Internet: http://www.issource.org
AOK 5/01
LOK 6/00

ISA - THE INSTRUMENTATION, SYSTEMS AND AUTOMATION SOCIETY (ISA)
67 Alexander Drive
P.O. Box 12277
Research Triangle Park, NC 27709
Ph: 919-549-8411
Fax: 919-549-8288
e-mail: info@isa.org
Internet: http://www.isa.org
AOK 5/01
LOK 6/00

KITCHEN CABINET MANUFACTURERS ASSOCIATION (KCMA)
1899 Preston White Dr.
Reston, VA 20191-5435
Ph: 703-264-1690
Fax: 703-620-6530
Internet: http://www.kcma.org
AOK 5/01
LOK 6/00

L.H. BAILEY HORTORIUM (LHBH)

c/o Cornell University
Information and Referral Center
Day Hall Lobby
Ithaca, NY 14853-2801
PH: 607-254-INFO (4636)
Internet: http://www.plantbio.cornell.edu/Hortorium
AOK 6/01
LOK 0/00

MANUFACTURERS STANDARDIZATION SOCIETY OF THE VALVE AND FITTINGS INDUSTRY (MSS)
127 Park St., NE
Vienna, VA 22180-4602
Ph: 703-281-6613
Fax: 703-281-6671
Internet: htp://www.mss-hq.com
e-mail: info@mss-hq.com
AOK 5/01
LOK 6/00

MAPLE FLOORING MANUFACTURERS ASSOCIATION (MFMA)
60 Revere Dr., Suite 500
Northbrook, IL 60062
Ph: 847-480-9138
Fax: 847-480-9282
Internet: http://www.maplefloor.org
AOK 5/01
LOK 6/00

MARBLE INSTITUTE OF AMERICA (MIA)
30 Eden Alley, Suite 301
Columbus, OH 43215
Ph: 614-228-6194
Fax: 614-461-1497
Internet: http://www.marble-institute.com
e-mail: stoneassociations@hotmail.com
AOK 5/01
LOK 6/00

MASTER PAINTERS INSTITUTE (MPI)
4090 Graveley Street
Burnaby, BC CANADA V5C 3T6
PH: 888-674-8937
Fx: 888-211-8708
Internet: http://www.paintinfo.com/mpi
AOK 9/01
LOK 0/00

MATERIAL HANDLING INDUSTRY OF AMERICA (MHI)
8720 Red Oak Blvd., Suite 201
Charlotte, NC 28217-3992
Ph: 800-345-1815 or 704-676-1190
Fax: 704-676-1199
Internet: htp://www.mhia.org
AOK 5/01
LOK 6/00

METAL BUILDING MANUFACTURERS ASSOCIATION (MBMA)
1300 Sumner Ave.
Cleveland, OH 44115-2851
Ph: 216-241-7333
Fax: 216-241-0105
Internet: http://www.mbma.com
e-mail: mbma@mbma.com
AOK 5/01
LOK 6/00

METAL LATH/STEEL FRAMING ASSOCIATION (ML/SFA)

NAAMM Headquarters
8 South Michigan Avenue, Suite 1000
Chicago, IL 60603
PH: 312-332-0405
FAX: 312-332-0706
Internet: http://www.naamm.org/mlsfa.htm
AOK 6/01
LOK 0/00
NOTE --- ML/SFA has merged with NAAM.

MIDWEST INSULATION CONTRACTORS ASSOCIATION (MICA)
2017 So. 139th Cir.
Omaha, NE 68144
Ph: 402-342-3463
Fax: 402-330-9702
Internet: http://www.micainsulation.org
e-mail: info@micainsulation.org
AOK 5/01
LOK 6/00

MONORAIL MANUFACTURERS ASSOCIATION (MMA)

8720 Red Oak Blvd., Suite 201
Charlotte, NC 28217
PH: 704-676-1190
FAX: 704-676-1199
Internet: http://www.mhia.org/
AOK 6/01
LOK 0/00

NACE INTERNATIONAL (NACE)
1440 South Creek Drive
Houston, TX 77084-4906
Ph: 281-228-6200
Fax: 281-228-6300
Internet: http://www.nace.org
AOK 5/01
LOK 6/00

NATIONAL ASSOCIATION OF ARCHITECTURAL METAL MANUFACTURERS (NAAMM)
8 S. Michigan Ave, Suite 1000
Chicago, IL 60603
Ph: 312-782-4951
Fax: 312-332-0405
Internet: http://www.naamm.org
e-mail: naamm@gss.net

AOK 5/01
LOK 6/00

NATIONAL BOARD OF BOILER AND PRESSURE VESSEL INSPECTORS (NBBPVI)
1055 Crupper Ave.
Columbus, OH 43229-1183
Ph: 614-888-8320
Fax: 614-847-1147
Internet: http://www.nationalboard.org
e-mail: tbecker@nationalboard.org
LOK 5/01
AOK 12/00

NATIONAL CABLE TELEVISION ASSOCIATION (NCTA)
1724 Massachusetts Ave. NW
Washington, DC 20036-1969
Ph: 202-775-3550
Fax: 202-775-1055
Internet: http://www.ncta.com
AOK 5/01
LOK 6/00

NATIONAL CONCRETE MASONRY ASSOCIATION (NCMA)
2302 Horse Pen Road
Herndon, VA 20171-3499
Ph: 703-713-1900
Fax: 703-713-1910
Internet: http://www.ncma.org
AOK 9/01
LOK 0/00

NATIONAL COUNCIL ON RADIATION PROTECTION AND MEASUREMENTS (NCRP)
7910 Woodmont Ave., Suite 800
Bethesda, MD 20814-3095
Ph: 800-229-2652
Ph. 301-657-2652
Fax: 301-907-8768
Internet: http://www.ncrp.com
AOK 5/01
LOK 6/00

NATIONAL DRILLING ASSOCIATION (NDA)

6089 Franz Road, Suite 101
Dublin, OH 43017
Ph: 614-798-8080
FAX: 614-798-2255
Internet: http://www.nda4u.com/
AOK 10/01
LOK 0/0

NATIONAL ELECTRICAL MANUFACTURERS ASSOCIATION (NEMA)
1300 N. 17th St., Suite 1847
Rosslyn, VA 22209
Ph: 703-841-3200
Fax: 703-841-3300
Internet: http://www.nema.org/
AOK 5/01
LOK 6/00

NATIONAL ENVIRONMENTAL BALANCING BUREAU (NEBB)
8575 Grovemont Circle
Gaithersburg, MD 20877-4121
Ph: 301-977-3698
Fax: 301-977-9589
Internet: http://www.nebb.org
AOK 5/01
LOK 6/00

NATIONAL FENESTRATION RATING COUNCIL (NFRC)
1300 Spring Street, Suite 500
Silver Spring, MD 20910
Ph: 301-589-6372
Fax: 303-588-6342
Internet: http://www.nfrc.org
E-Mail: nfrcusa@aol.com or info@nfrc.com
AOK 5/01
LOK 6/00

NATIONAL FIRE PROTECTION ASSOCIATION (NFPA)
1 Batterymarch Park
P.O. Box 9101
Quincy, MA 02269-9101
Ph: 617-770-3000
Fax: 617-770-0700
Internet: http://www.nfpa.org
AOK 5/01
LOK 8/00

NATIONAL FLUID POWER ASSOCIATION (NFLPA)
3333 N. Mayfair Rd.
Milwaukee, WI 53222-3219
Ph: 414-778-3344
Fax: 414-778-3361
Internet: http://www.nfpa.com
E-mail: nfpa@nfpa.com
AOK 5/01
LOK 6/00

NATIONAL HARDWOOD LUMBER ASSOCIATION (NHLA)
P.O. Box 34518
Memphis, TN 38184-0518
Ph: 901-377-1818
Fax: 901-382-6419
e-mail: info@natlhardwood.org
Internet: http://www.natlhardwood.org
AOK 5/01
LOK 6/00

NATIONAL INSTITUTE FOR CERTIFICATION IN ENGINEERING TECHNOLOGIES (NICET)
1420 King Street
Alexandria, VA 22314-2794
Ph: 888-476-4238
Internet: http://www.nicet.org
AOK 5/01
LOK 6/00

NATIONAL INSTITUTE FOR OCCUPATIONAL SAFETY AND HEALTH (NIOSH)
Mail Stop C-13
4676 Columbia Parkway
Cincinnati, OH 45226-1998
Ph: 800-356-4674
Fx: 513-533-8573
Internet: http://www.cdc.gov/niosh/homepage.html
To order pubs for which a fee is charged, order from:
Superintendent of Documents
U.S. Government Printing Office
732 North Capitol Street, NW
Mailstop: SDE
Washington, DC 20401
Ph: 202-512-1530
Fax: 202-512-1262
Internet: http://www.gpo.gov
AOK 5/01
LOK 6/00

NATIONAL INSTITUTE OF JUSTICE (NIJ)
National Law Enforcement and Corrections Technology Center
2277 Research Blvd. - Mailstop 1E
Rockville, MD 20850
Ph: 800-248-2742 or 301-519-5060
Fax: 301-519-5149
Internet: http://www.nlectc.org
e-mail: asknlectc@nlectc.org
AOK 5/01
LOK 6/00

NATIONAL INSTITUTE OF STANDARDS AND TECHNOLOGY (NIST)
100 Bureau Drive
Stop 3460
Gaithersburg, MD 20899-3460
Ph: 301-975-NIST
Internet: http://www.nist.gov
Order Publications From:
Superintendent of Documents
U.S. Government Printing Office
732 North Capitol Street, NW
Mailstop: SDE
Washington, DC 20401
Ph: 202-512-1530
Fax: 202-512-1262
Internet: http://www.gpo.gov
or
National Technical Information Services (NTIS)
5285 Port Royal Rd.
Springfield, VA 22161
Ph: 703-605-6000
Fax: 703-605-6900
Internet: http://www.ntis.gov
AOK 5/01
LOK 6/00

NATIONAL LIME ASSOCIATION (NLA)

200 North Glebe Road, Suite 800
Arlington, VA 22203

PH: 703-243-5463
FAX: 703-243-5489
Internet: http://www.lime.org
AOK 6/01
LOK 0/00

NATIONAL OAK FLOORING MANUFACTURERS ASSOCIATION (NOFMA)
P.O. Box 3009
Memphis, TN 38173-0009
Ph: 901-526-5016
Fax: 901-526-7022
Internet: http://www.nofma.org
AOK 5/01
LOK 6/00

NATIONAL READY-MIXED CONCRETE ASSOCIATION (NRMCA)
900 Spring St.
Silver Spring, MD 20910
Ph: 301-587-1400
Fax: 301-585-4219
Internet: http://www.nrmca.org
AOK 5/01
LOK 6/00

NATIONAL ROOFING CONTRACTORS ASSOCIATION (NRCA)
10255 W. higgins Rd., Suite 600
Rosemont, IL 60018
Ph: 847-299-9070
Fax: 847-299-1183
Internet: http://www.nrca.net
AOK 5/01
LOK 6/00

NATIONAL TERRAZZO & MOSAIC ASSOCIATION (NTMA)
110 East Market St., Suite 200 A
Leesburg, Virginia 20176
Ph: 703-779-1022 or 800-323-9736
Fax: 703-779-1026
Internet: http://www.ntma.com
e-mail: info@ntma.com
AOK 5/01
LOK 6/00

NATURAL RESOURCE, AGRICULTURAL AND ENGINEERING SERVICE (NRAES)

Cooperative Extension
152 Riley-Robb Hall
Ithaca, NY 14853-5701
Ph: 607-255-7654
Fax: 607-254-8770
Internet: http://www.nraes.org
E-mail: nraes@cornell.edu
AOK 5/01
LOK 6/00

NORTH AMERICAN INSULATION MANUFACTURERS ASSOCIATION (NAIMA)
44 Canal Center Plaza, Suite 310
Alexandria, VA 22314
Ph: 703-684-0084

Fax: 703-684-0427
Internet: http://www.naima.org
e-mail: insulation@naima.org
AOK 5/01
LOK 6/00

NORTHEASTERN LUMBER MANUFACTURERS ASSOCIATION (NELMA)
272 Tuttle Road
P.O. Box 87A
Cumberland Center, ME 04021
Ph: 207-829-6901
Fax: 207-829-4293
Internet: http://www.nelma.org
e-mail: nelma@javanet.com
AOK 5/01
LOK 6/00

NSF INTERNATIONAL (NSF)
ATTN: Publications
789 North Dixboro Rd.
P.O. Box 130140
Ann Arbor, MI 48113-0140
Ph: 734-769-8010
Fax: 734-769-0109
Toll Free: 800-NSF-MARK
Internet: http://www.nsf.org
AOK 5/01
LOK 6/00

PIPE FABRICATION INSTITUTE (PFI)
655 32nd Avenue, Suite 201
Lachine, QC, Canada H8T 3G6
Ph: 514-634-3434
Fax: 514-634-9736
Internet: http://www.pfi-institute.org
e-mail: pfi@pfi-institute.org
AOK 5/01
LOK 6/00

PLASTIC PIPE AND FITTINGS ASSOCIATION (PPFA)
800 Roosevelt Rd., Bldg C, Suite 20
Glen Ellyn, IL 60137
Ph: 630-858-6540
Fax: 630-790-3095
Internet: http://www.ppfahome.org
AOK 5/01
LOK 6/00

PLASTICS PIPE INSTITUTE (PPI)
1825 Connecticut Ave. NW
Washington, D. C. 20009
Ph: 202-462-9607
Fax: 202-462-9779
Internet: http://www.plasticpipe.org
AOK 5/01
LOK 6/00

PLUMBING AND DRAINAGE INSTITUTE (PDI)
45 Bristol Dr.

South Easton, MA 02375
Ph: 508-230-3516 or 800-589-8956
Fax: 508-230-3529
Internet: http://www.pdionline.org
E-Mail: info@pdionline.org
AOK 5/01
LOK 6/00

PLUMBING AND PIPING INDUSTRY COUNCIL (PPIC)
9450 SW Commerce Circle, Suite 310
Wilsonville, OR 97070-9626
Ph: 503-682-7919
Fax: 503-682-6241
Internet: http://www.pmcaoregon.com/
AOK 11/01
LOK 0/00

PLUMBING-HEATING-COOLING CONTRACTORS NATIONAL ASSOCIATION (NAPHCC)
180 S. Washington Street
P.O. Box 6808
Falls Church, VA 22040
Ph: 800-533-7694
Fax: 703-237-7442
Internet: http://www.phccweb.org
AOK 5/01
LOK 6/00

PORCELAIN ENAMEL INSTITUTE (PEI)
5696 Peachtree Parkway, PO Box 920220
Norcross, GA 30092
Ph: 770-242-2632
Fax: 770-446-1452
Internet: http://www.porcelainenamel.com
e-mail: penamel@aol.com
AOK 5/01
LOK 6/00

POST-TENSIONING INSTITUTE (PTI)
1717 West Northern Avenue, Suite 114
Phoenix, AZ 85021
Ph: 602-870-7540
Fax: 602-870-7541
Internet: http://www.post-tensioning.org/
AOK 1/02
LOK 1/02

PRECAST/PRESTRESSED CONCRETE INSTITUTE (PCI)
209 West Jackson Blvd.
Chicago, IL 60606-6938
Ph: 312-786-0300
Fax: 312-786-0353
Internet: http://www.pci.org
e-mail: info@pci.org
AOK 5/01
LOK 6/00

REDWOOD INSPECTION SERVICE (RIS)

405 Efrente Drive, Suite 200

Novato, CA 94949
Ph: 415-382-0662
Fax: 415-382-8531
Internet: http://www.calredwood.org
E-Mail: cjjourdain@worldnet.att.net
AOK 8/01
LOK 0/00

RUBBER MANUFACTURERS ASSOCIATION (RMA)

1400 K St., NW, Suite 900
Washington, DC 20005
Ph: 202-682-4800
Fax: 202-682-4854
Internet: http://www.rma.org
Order Publications from:
The Mail Room
P. O. Box 3147
Medina, OH 44258
Ph: 800-325-5095 EXT 242 or 330-723-2978
Fax: 330-725-0576
AOK 5/01
LOK 6/00

SCIENTIFIC CERTIFICATION SYSTEMS (SCS)

1939 Harrison Street, Suite 400
Oakland, CA 94612
Ph: 510-832-1415
FAX: 510-832-0359
Internet: http://www.scs1.org
AOK 11/01
LOK

SCREEN MANUFACTURERS ASSOCIATION (SMA)
2850 South Ocean Boulevard, Suite 311
Palm Beach, FL 33480-5535
Ph: 561-533-0991
Fax: 561-533-7466
e-mail: fitzgeraldfscott@aol.com
Internet: http://www.screenmfgassociation.org
AOK 5/01
LOK 6/00

SEMICONDUCTOR EQUIPMENT AND MATERIALS INTERNATIONAL (SEMI)

3081 Zanker Road
San Jose, CA 95134
Phone: 1.408.943.6900
Fax: 1.408.428.9600
Internet: http://www.semi.org
E-mail: semihq@semi.org
AOK 6/01
LOK 0/00

SHEET METAL & AIR CONDITIONING CONTRACTORS' NATIONAL ASSOCIATION (SMACNA)
4201 Lafayette Center Dr.,
Chantilly, VA 20151-1209

Ph: 703-803-2980
Fax: 703-803-3732
Internet: http://www.smacna.org
e-mail: info@smacna.org
AOK 5/01
LOK 6/00

SINGLE PLY ROOFING INSTITUTE (SPRI)
200 Reservoir St., Suite 309A
Needham, MA 02494
Ph: 781-444-0242
Fax: 781-444-6111
Internet: http://www.spri.org
e-mail: spri@spri.org
AOK 5/01
LOK 6/00

NOTE --- Name is now just SPRI.

SOCIETY OF AUTOMOTIVE ENGINEERS INTERNATIONAL (SAE)
400 Commonwealth Dr.
Warrendale, PA 15096-0001
Ph: 724-776-4841
Fax: 724-776-5760
Internet: http://www.sae.org
e-mail: custsvc@sae.org
AOK 5/01
LOK 6/00

SOCIETY FOR MOTION PICTURE & TELEVISION ENGINEERS (SMPTE)

595 West Hartsdale Avenue
WhitePlains, New York 10607
PH: 914-761-1100
FAX: 914-761-3115
Internet: http://www.smpte.org
AOK 6/01
LOK 0/00

NOTE --- Organization name is now Society of Motion Picture & Television Engineers.

SOCIETY OF THE PLASTICS INDUSTRY (SPI)

1801 K Street, NW, Suite 600K
Washington, DC 20006
PH: 202-974-5200
FX: 202-296-7005
Internet: http://www.socplas.org
AOK 11/01
LOK 0/00

SOLAR RATING AND CERTIFICATION CORPORATION (SRCC)

c/o FSEC, 1679 Clearlake Road
Cocoa, FL 32922-5703
PH: 321-638-1537
FAX: 321-638-1010
Internet: http://www.solar-rating.org
AOK 6/01
LOK 0/00

SOUTHERN CYPRESS MANUFACTURERS ASSOCIATION (SCMA)
400 Penn Center Boulevard, Suite 530
Pittsburgh, PA 15235
Ph: 412-829-0770
Fax: 412-829-0844
Internet: http://www.cypressinfo.org
AOK 5/01
LOK 6/00

SOUTHERN PINE INSPECTION BUREAU (SPIB)
4709 Scenic Highway
Pensacola, FL 32504-9094
Ph: 850-434-2611
Fax: 850-433-5594
e-mail: spib@spib.org
Internet: http://www.spib.org
AOK 5/01
LOK 6/00

STATE OF CALIFORNIA DEPARTMENT OF TRANSPORTATION (CDT)
Publication Distribution Unit
1900 Royal Oaks Dr.
Sacramento, CA 95815
Ph: 916-445-3520 or 916-227-7000 (CA Transportation Lab)
Fax: 916-324-8997
Internet: http://www.dot.ca.gov
AOK 5/01
LOK 0/00

STATE OF MARYLAND CODE OF MARYLAND REGULATIONS (COMAR)
1700 Margaret Avenue
Annapolis, MD 21401
phone: 410-974-2486
fax: 410-974-2546
Internet:
http://www.sos.state.md.us/sos/dsd/comar/html/comar.html
AOK 8/01
LOK 0/00

STATE OF NORTH CAROLINA ADMINISTRATIVE CODE

Internet: http://www.doa.state.nc.us/PandC/admcode.htm
AOK 6/01
LOK 0/00

STATE OF VIRGINIA ADMINISTRATIVE CODE (VAC)
Virginia Code Commission
General Assembly Building, 2nd Floor
910 Capitol Street
Richmond, Virginia 23219
Phone: 804-786-3591
Fax: 804-692-0625
Internet: http://www.legis.state.va.us/codecomm/codehome.htm
AOK 8/01
LOK 0/00

STATE OF [CALIFORNIA] [WASHINGTON] DEPARTMENT OF AGRICULTURE

AOK 0/00
LOK 0/00

STEEL DECK INSTITUTE (SDI)
P.O. Box 25
Fox River Grove, IL 60021-0025
Ph: 847-462-1930
Fax: 847-462-1940
Internet: http://www.sdi.org
e-mail: Steve@sdi.org
AOK 5/01
LOK 6/00

STEEL DOOR INSTITUTE (SDOI)
30200 Detroit Rd.
Cleveland, OH 44145-1967
Ph: 440-899-0010
Fax: 440-892-1404
Internet: http://www.steeldoor.org
AOK 5/01
LOK 6/00

STEEL JOIST INSTITUTE (SJI)
3127 Tenth Ave., North Ext.
Myrtle Beach, SC 29577-6760
Ph: 843-626-1995
Fax: 843-626-5565
Internet: http://www.steeljoist.org
AOK 5/01
LOK 6/00

STEEL TANK INSTITUTE (STI)
570 Oakwood Rd.
Lake Zurich, IL 60047
Ph: 847-438-8265
Fax: 847-438-8766
Internet: http://www.steeltank.com
AOK 5/01
LOK 6/00

STEEL WINDOW INSTITUTE (SWI)
1300 Sumner Ave.
Cleveland, OH 44115-2851
Ph: 216-241-7333
Fax: 216-241-0105
Internet: http://www.steelwindows.com
AOK 5/01
LOK 6/00

TECHNICAL ASSOCIATION OF THE PULP AND PAPER INDUSTRY (TAPPI)

P.O. Box 105113
Atlanta, GA 30348-5113
PH: 800-322-8686
Internet: http://www.tappi.org
AOK 6/01
LOK 0/00

THE ASSOCIATION OF THE WALL AND CEILING INDUSTRIES - INTERNATIONAL

(AWCI)

803 West Broad Street
Falls Church, VA 22046
PH: 703-534-8300
FAX: 703-534-8307
Internet: http://www.awci.org
AOK 6/01
LOK 0/00

NOTE --- Correct organization name does not include "The".

THE INSULATING GLASS MANUFACTURERS ALLIANCE (IGMA)

27 ave Goulburn Avenue
Ottawa, Ontario. CANADA
K1N 8C7
Phone: 613-233-1510
Fax: 613-233-1929
e-mail: info@igmaonline.org
Internet: http://www.igmaonline.org
AOK 9/01
LOK 0/00

NOTE --- Correct organization name does not include "The".

THE SOCIETY FOR PROTECTIVE COATINGS (SSPC)
40 24th Street, 6th Floor
Pittsburgh, PA 15222-4656
Ph: 412-281-2331
Fax: 412-281-9992
Internet: http://www.sspc.org
AOK 5/01
LOK 6/00

TILE COUNCIL OF AMERICA (TCA)
100 Clemson Research Blvd
Anderson, SC 29625
Ph: 864-646-8453
FAX: 864-646-2821
Internet: http://www.tileusa.com
e-mail: literature@tileusa.com
AOK 5/01
LOK 6/00

TRUSS PLATE INSTITUTE (TPI)
583 D'Onofrio Dr., Suite 200
Madison, WI 53719
Ph: 608-833-5900
Fax: 608-833-4360
Internet: None
AOK 5/01
LOK 6/00

TUBULAR EXCHANGER MANUFACTURERS ASSOCIATION (TEMA)
25 N. Broadway
Tarrytown, NY 10591
Ph: 914-332-0040
Fax: 914-332-1541
Internet: http://www.tema.org
AOK 5/01

LOK 6/00

TURFGRASS PRODUCERS INTERNATIONAL (TPI)
1855-A Hicks Road
Rolling Meadows, IL 60008
PH: 800-405-8873
FAX: 847-705-8347
Internet: http://www.turfgrasssod.org
AOK 6/01
LOK 0/00

UNDERWRITERS LABORATORIES (UL)
333 Pfingsten Rd.
Northbrook, IL 60062-2096
Ph: 847-272-8800
Fax: 847-272-8129
Internet: http://www.ul.com/
e-mail: northbrook@us.ul.com
AOK 5/01
LOK 6/00

UNI-BELL PVC PIPE ASSOCIATION (UBPPA)
2655 Villa Creek Dr., Suite 155
Dallas, TX 75234
Ph: 214-243-3902
Fax: 214-243-3907
Internet: http://www.uni-bell.org
e-mail: info@uni-bell.org
AOK 5/01
LOK 6/00

UNIVERSITY OF CALIFORNIA DIVISION OF AGRICULTURE AND NATURAL RESOURCES (UCDANR)
FRANKLIN BUILDING
1111 Franklin St., 6th floor
Oakland, CA 94607-5200
Internet: http://www.danr.ucop.edu
AOK 8/01
LOK 0/00

U.S. AIR FORCE (USAF)
Air Force Publishing Distribution Center
Ph: 410-687-3330
E-mail: afpdc-service@pentagon.af.mil
Internet: http://www.afpubs.hq.af.mil
AOK 11/01
LOK

U.S. ARMY (DA)

U.S. Army Publications Agency
Internet: http://www.usapa.army.mil/
AOK: Publications in electronic media
LOK:

U.S. ARMY CORPS OF ENGINEERS (USACE)

Order CRD-C DOCUMENTS from:
U.S. Army Engineer Waterways Experiment Station

ATTN: Technical Report Distribution Section, Services
Branch, TIC
3909 Halls Ferry Rd.
Vicksburg, MS 39180-6199
Ph: 601-634-2664
Fax: 601-634-2388
Internet: http://www.wes.army.mil/SL/MTC/handbook/handbook.htm

Order Other Documents from:
USACE Publications Depot
Attn: CEIM-SP-D
2803 52nd Avenue
Hyattsville, MD 20781-1102
Ph: 301-394-0081
Fax: 301-394-0084
Internet: http://www.usace.army.mil/publications
or http://www.hnd.usace.army.mil/techinfo/index.htm
AOK 5/01
LOK 6/00

U. S. ARMY EDGEWOOD RESEARCH, DEVELOPMENT, AND ENGINEERING CENTER (EA)

Aberdeen Proving Ground, MD
Internet: Unknown
AOK 11/01
LOK

U.S. ARMY ENVIRONMENTAL CENTER (AEC)

5179 Hoadley Road
Aberdeen Proving Ground, MD 21010-5401
Internet: http://aec.army.mil
AOK 11/01
LOK 0/00

U. S. ARMY ENVIRONMENTAL HYGIENE AGENCY (USAEHA)

Telephone:
FAX:
Internet: None found
AOK 11/01
LOK

U.S. BUREAU OF RECLAMATION (BOR)

Denver Federal Center
P.O. Box 25007
Denver, CO 80225
Ph: 303-445-2080
Internet: http://www.usbr.gov
Order from:
National Technical Information
Services (NTIS)
5285 Port Royal Rd.
Springfield, VA 22161
Ph: 703-605-6000
Fax: 703-605-6900
Internet: http://www.ntis.gov

AOK 5/01
LOK 6/00

U.S. DEFENSE COMMUNICATIONS AGENCY (DCA)

Washington, D.C. 20305-2000
Telephone:
FAX:
Internet: Not found
AOK 11/01
LOK

U.S. DEFENSE INTELLIGENCE AGENCY (DIA)

Defense Intelligence Analysis Center (DIAC)
MacDill Boulevard and Luke Avenue
Bolling AFB, MD
Internet: http://www.dia.mil
AOK 8/01

U.S. DEFENSE LOGISTICS AGENCY (DLA)

Andrew T. McNamara Building
8725 John J. Kingman Road
Fort Belvoir, VA 22060
Internet: http://www.dla.mil
AOK 8/01

U.S. DEPARTMENT OF AGRICULTURE (USDA)

Order AMS Publications from:
AGRICULTURAL MARKETING SERVICE (AMS)
Seed Regulatory and Testing Branch
USDA, AMS, LS Div.
Room 209, Bldg. 306, BARC-East
Beltsville, MD 20705-2325
Ph: 301-504-9430
Fax: 301-504-8098
Internet: http://www.ams.usda.gov/nop/
e-mail: jeri.irwin@usda.gov

Order Other Publications from:
U.S. Department of Agriculture
14th and Independence Ave., SW, Room 4028-S
Washington, DC 20250
Ph: 202-720-2791
Fax: 202-720-2166
Internet: http://www.usda.gov
AOK 5/01
LOK 6/00

U.S. DEPARTMENT OF COMMERCE (DOC)

Order Publications From:
National Technical Information Service
5285 Port Royal Road
Springfield, VA 22161

Ph: 703-605-6000
Fax: 703-605-6900
Internet: http://www.ntis.gov
AOK 5/01
LOK 6/00

U.S. DEPARTMENT OF DEFENSE (DOD)

Order DOD Documents from:
National Technical Information Service
5285 Port Royal Road
Springfield, VA 22161
Ph: 703-605-6000
FAX: 703-605-6900
Internet: http://www.ntis.gov

Order Military Specifications, Standards and Related Publications from:
Department of Defense Single Stock Point for (DODSSP)
Defense Automation and Production Service (DAPS)
Bldg 4D
700 Robbins AV
Philadelphia, PA 19111-5094
Ph: 215-697-2179
Fax: 215-697-1462
Internet: http://www.dodssp.daps.mil
AOK 5/01
LOK 6/00

U.S. DEPARTMENT OF HOUSING AND URBAN DEVELOPMENT (HUD)
Order from:
HUD User
P.O. Box 6091
Rockville, MD 20849
Ph: 800-245-2691
Fax: 301-519-5767
Internet: http://www.huduser.org
e-mail: Huduser@aspensys.com
AOK 5/01
LOK 6/00

U.S. DEPARTMENT OF STATE (SD)

ATTN: DS/PSP/SEP
SA-6, Room 804
Washington, DC 20522-0602
Ph: 703-875-6537
Internet: http://www.state.gov
AOK 5/01
LOK 6/00

U.S. DEPARTMENT OF TRANSPORTATION (DOT)
400 7th Street, SW
Washington, DC 20590
Internet: http://www.dot.gov
AOK 8/01
LOK 0/00

U.S. ENVIRONMENTAL PROTECTION AGENCY (EPA)

Ariel Rios Building
1200 Pennsylvania Avenue, N.W.
Washington, DC 20460
Ph: 202-260-2090
FAX: 202-260-6257
Internet: http://www.epa.gov

NOTE --- Some documents are available only from:
National Technical Information Services (NTIS)
5285 Port Royal Rd.
Springfield, VA 22161
Ph: 703-605-6000
Fax: 703-605-6900
Internet: http://www.ntis.gov
AOK 5/01
LOK 6/00

U.S. FEDERAL AVIATION ADMINISTRATION (FAA)
Order from:
Superintendant of Documents
U. S. Government Printing Office
732 North Capitol Street, NW
Mailstop: SDE
Washington, DC 20401
Ph: 202-512-1530
Fax: 202-512-1262
Internet: http://www.gpo.gov
For free documents, order from:
Federal Aviation Administration
Dept. of Transportation
ATTN: General Services Section M-45
400 Seventh St., SW
Washington, DC 20590-0001
Ph: 202-366-4000
Internet: http://www.dot.gov
AOK 5/01
LOK 6/00

U.S. FEDERAL COMMUNICATIONS COMMISSION (FCC)
445 12th Street SW
Washington, DC 20554
Phone: 888-CALL-FCC
Fax: 202-418-0232
Internet: http://www.fcc.gov
E-mail: fccinfo@fcc.gov
AOK 8/01
LOK 0/00

U.S. FEDERAL EMERGENCY MANAGEMENT AGENCY (FEMA)
500 C Street, SW
Washington, D.C. 20472
Phone: 202-646-4600
Internet: http://www.fema.gov
AOK 8/01
LOK 0/00

U.S. FEDERAL HIGHWAY ADMINISTRATION (FHWA)
Office of Highway Safety (HHS-31)

400 Seventh St., SW
Washington, DC 20590-0001
Ph: 202-366-0411
Fax: 202-366-2249
Internet: http://www.fhwa.dot.gov
Order from:

Superintendant of Documents
U. S. Government Printing Office
732 North Capitol Street, NW
Mailstop: SDE
Washington, DC 20401
Ph: 202-512-1530
Fax: 202-512-1262
Internet: http://www.gpo.gov
AOK 5/01
LOK 6/00

U.S. GENERAL SERVICES ADMINISTRATION (GSA)

Order from:
General Services Administration
Federal Supply Service Bureau
470 E L'Enfant Plaza, S.W., Suite 8100
Washington, DC 20407
Ph: 202-619-8925
Fx: 202-619-8978
Internet: http://www.fss.gsa.gov/pub/fed-specs.cfm
AOK 5/01
LOK 6/00

U.S. NATIONAL AERONAUTICS AND SPACE ADMINISTRATION (NASA)
Internet: http://www.nasa.gov
AOK 11/01
LOK

U.S. NATIONAL ARCHIVES AND RECORDS ADMINISTRATION (NARA)
700 Pennsylvania Avenue, N.W.
Washington, D.C. 20408
Phone: 800-234-8861
Internet: http://www.nara.gov

Order documents from:
Superintendent of Documents
U.S.Government Printing Office
732 North Capitol Street, NW
Washington, DC 20401
Mailstop: SDE
Ph: 202-512-1530
Fax: 202-512-1262
Internet: http://www.gpo.gov
E-mail: gpoaccess@gpo.gov
AOK 5/01

U.S. NAVAL FACILITIES ENGINEERING COMMAND (NAVFAC)
1510 Gilbert St.
Norfolk, VA 23511-2699
Ph: 757-322-4200
Fax: 757-322-4416

Internet: http://www.efdlant.navfac.navy.mil/LANTOPS_15
AOK 5/01
LOK 6/00

U.S. NAVAL FACILITIES ENGINEERING SERVICE CENTER (NFESC)
1100 23rd Avenue
Port Hueneme, CA 93043-4370
Ph: 805-982-4980
Internet: http://www.nfesc.navy.mil
AOK 5/01
LOK 6/00

WATER ENVIRONMENT FEDERATION (WEF)
601 Wythe St.
Alexandria, VA 22314-1994
Ph: 703-684-2452
Fax: 703-684-2492
Internet: http://www.wef.org
AOK 5/01
LOK 6/00

WATER QUALITY ASSOCIATION (WQA)
4151 Naperville Rd.
Lisle, IL 60532
Ph: 630-505-0160
Fax: 630-505-9637
Internet: http://www.wqa.org
e-mail: info@mail.wqa.org
AOK 5/01
LOK 6/00

WEST COAST LUMBER INSPECTION BUREAU (WCLIB)
P.O. Box 23145
Portland, OR 97281
Ph: 503-639-0651
Fax: 503-684-8928
Internet: http://www.wclib.org
e-mail: info@wclib.org
AOK 5/01
LOK 6/00

WESTERN WOOD PRESERVERS INSTITUTE (WWPI)
7017 N.E. Highway 99 # 108
Vancover, WA 98665
Ph: 360-693-9958
Fax: 360-693-9967
Internet: http://www.wwpinstitute.org
e-mail: wwpi@teleport.com
AOK 5/01
LOK 6/00

WESTERN WOOD PRODUCTS ASSOCIATION (WWPA)
Yeon Bldg.
522 SW 5th Ave.
Suite 500
Portland, OR 97204-2122
Ph: 503-224-3930
Fax: 503-224-3934
Internet: http://www.wwpa.org

e-mail: info@wwpa.org
AOK 5/01
LOK 6/00

WINDOW AND DOOR MANUFACTURERS ASSOCIATION (WDMA)
1400 East Touhy Ave., Suite 470
Des Plaines, IL 60018
Ph: 847-299-5200 or 800-223-2301
Fax: 708-299-1286
Internet: http://www.wdma.com
e-mail: admin@wdma.com
AOK 5/01
LOK 6/00

WOOD MOULDING AND MILLWORK PRODUCERS ASSOCIATION (WMMPA)
507 First Street
Woodland, CA 95695
Ph: 916-661-9591
Fax: 916-661-9586
Internet: http://www.wmmpa.com
AOK 5/01
LOK 6/00

-- End of Section --

SECTION 01451

CONTRACTOR QUALITY CONTROL
03/00

PART 1 GENERAL

1.1 REFERENCES

The publications listed below form a part of this specification to the extent referenced. The publications are referred to in the text by basic designation only.

AMERICAN SOCIETY FOR TESTING AND MATERIALS (ASTM)

ASTM D 3740	(1996) Minimum Requirements for Agencies Engaged in the Testing and/or Inspection of Soil and Rock as Used in Engineering Design and Construction
ASTM E 329	(1995b) Agencies Engaged in the Testing and/or Inspection of Materials Used in Construction

1.2 PAYMENT

Separate payment will not be made for providing and maintaining an effective Quality Control program, and all costs associated therewith shall be included in the applicable lump-sum price contained in the Bidding Schedule.

PART 2 PRODUCTS (Not Applicable)

PART 3 EXECUTION

3.1 GENERAL REQUIREMENTS

The Contractor is responsible for quality control and shall establish and maintain an effective quality control system in compliance with the Contract Clause titled "Inspection of Construction." The quality control system shall consist of plans, procedures, and organization necessary to produce an end product that complies with the contract requirements. The system shall cover all construction operations, both onsite and offsite, and shall be keyed to the proposed construction sequence.

3.2 QUALITY CONTROL PLAN

The Contractor shall furnish for review by the Government, not later than 30 days after receipt of notice to proceed, the Contractor Quality Control (CQC) Plan proposed to implement the requirements of the Contract Clause titled "Inspection of Construction." The plan shall identify personnel, procedures, control, instructions, tests, records, and forms to be used. The Government will consider an interim plan for the first 60 days of operation. Construction will be permitted to begin only after acceptance of the CQC Plan or acceptance of an interim plan applicable to the particular features of work to be started. Work outside of the features of

work included in an accepted interim plan will not be permitted to begin until acceptance of a CQC Plan or another interim plan containing the additional features of work to be started.

3.2.1 Content of the CQC Plan

The CQC Plan shall include, as a minimum, the following, in this order, to cover all construction operations, both onsite and offsite, including work by subcontractors, fabricators, suppliers, and purchasing agents:

a. A description of the quality control organization, including a chart showing lines of authority and acknowledgment that the CQC staff shall implement the three phase control system for all aspects of the work specified. The staff shall include a CQC System Manager who shall report to an authorized official of the firm.

b. The name, qualifications (in resume format), duties, responsibilities, and authorities of each person assigned a CQC function.

c. A copy of the letter to the CQC System Manager signed by an authorized official of the firm which describes the responsibilities and delegates sufficient authorities to adequately perform the functions of the CQC System Manager, including authority to stop work which is not in compliance with the contract. The CQC System Manager shall issue letters of direction to all other various quality control representatives outlining duties, authorities, and responsibilities. Copies of these letters shall also be furnished to the Government.

d. Procedures for scheduling, reviewing, certifying, and managing submittals, including those of subcontractors, offsite fabricators, suppliers, and purchasing agents. These procedures shall be in accordance with Section 01330 SUBMITTAL PROCEDURES.

e. Control, verification, and acceptance testing procedures for each specific test to include the test name, specification paragraph requiring test, feature of work to be tested, test frequency, and person responsible for each test. (Laboratory facilities will be approved by the Contracting Officer.)

f. Procedures for tracking preparatory, initial, and follow-up control phases and control, verification, and acceptance tests including documentation.

g. Procedures for tracking construction deficiencies from identification through acceptable corrective action. These procedures shall establish verification that identified deficiencies have been corrected.

h. Reporting procedures, including proposed reporting formats.

i. A list of the definable features of work. A definable feature of work is a task that is separate and distinct from other tasks, has separate control requirements, and may be identified by different trades or disciplines, or it may be work by the same trade in a different environment. Although each section of the specifications may generally be considered as a definable feature

of work, there are frequently more than one definable features under a particular section. This list will be agreed upon during the coordination meeting.

The QC Plan items above shall include RMS QC requirements.

3.2.2 Acceptance of Plan

Acceptance of the Contractor's plan is required prior to the start of construction. Acceptance is conditional and will be predicated on satisfactory performance during the construction. The Government reserves the right to require the Contractor to make changes in his CQC Plan and operations including removal of personnel, as necessary, to obtain the quality specified.

3.2.3 Notification of Changes

After acceptance of the CQC Plan, the Contractor shall notify the Contracting Officer in writing of any proposed change. Proposed changes are subject to acceptance by the Contracting Officer.

3.3 COORDINATION MEETING

After the Preconstruction Conference, before start of construction, and prior to acceptance by the Government of the CQC Plan, the Contractor shall meet with the Contracting Officer or Authorized Representative and discuss the Contractor's quality control system. The CQC Plan shall be submitted for review a minimum of 14 calendar days prior to the Coordination Meeting. During the meeting, a mutual understanding of the system details shall be developed, including the forms for recording the CQC operations, control activities, testing, administration of the system for both onsite and offsite work, and the interrelationship of Contractor's Management and control with the Government's Quality Assurance. Minutes of the meeting shall be prepared by the Government and signed by both the Contractor and the Contracting Officer. The minutes shall become a part of the contract file. There may be occasions when subsequent conferences will be called by either party to reconfirm mutual understandings and/or address deficiencies in the CQC system or procedures which may require corrective action by the Contractor.

3.4 QUALITY CONTROL ORGANIZATION

3.4.1 Personnel Requirements

The Contractor shall have a resident CQC Systems Manager and Project Superintendent at the project site. The Resident CQC Systems Manager will be backed-up by additional CQC personnel as required to assure quality of construction for all crafts for work in place.

This staff shall be at the site at all times during progress of the work and with complete authority to take any action necessary to ensure compliance with the contract. Support CQC staff can be employed directly by the prime contractor or the appropriate subcontractor. All CQC staff members shall be subject to interview and acceptance by the Contracting Officer or his designated representative.

3.4.2 CQC System Manager

The Contractor shall identify as CQC System Manager an individual within

the onsite work organizations who shall be responsible for overall management of CQC and have the authority to act in all CQC matters for the Contractor. The CQC System Manager will be held responsible for the quality of work at the job site and subject to removal by the Contracting Officer for non-compliance with quality requirements specified in the contract. The CQC System Manager shall be:

a. A graduate engineer, graduate architect, or a graduate of construction management, with a minimum of 5 years construction experience on construction similar to this contract

or

b. A person with a minimum of 10 years experience as a superintendent, inspector, QC manager, project manager, or construction manager in related construction work.

The CQC System Manager shall be on site at all times during construction and shall be employed by the prime Contractor. The CQC System Manager shall be assigned no other duties. An alternate for the CQC System Manager shall be identified in the plan to serve in the event of the System Manager's absence. The requirements for the alternate shall be the same as for the designated CQC System Manager.

3.4.3 CQC Personnel

In addition to CQC personnel specified elsewhere in the contract, the Contractor shall provide as part of the CQC organization specialized personnel to assist the CQC System Manager in the areas of electrical, mechanical, and structural engineering. These individuals shall be directly employed by the prime Contractor or the appropriate subcontractor; be responsible to the CQC System Manager; be physically present at the construction site during performance of the specialized item(s) of work; and have the necessary education and/or experience to perform his/her assigned duties. These individuals shall primarily be assigned quality control responsibilities, but may perform other duties at the approval of the Contacting Officer.

3.4.4 Additional Requirement

In addition to the above experience and education requirements, the CQC System Manager shall have completed the course entitled "Construction Quality Management For Contractors" no later than 60 days after the Contractor's receipt of the Notice To Proceed. This course is offered periodically by the Corps of Engineers. Specific times and locations are available from the Contracting Officer.

3.4.5 Organizational Changes

When it is necessary to make changes to the CQC staff, the Contractor shall revise the CQC Plan to reflect the changes and submit the changes to the Contracting Officer for acceptance.

3.5 SUBMITTALS AND DELIVERABLES

Submittals, if needed, shall be made as specified in Section 01330 SUBMITTAL PROCEDURES. The CQC organization shall be responsible for certifying that all submittals and deliverables are in compliance with the contract requirements.

3.6 CONTROL

Contractor Quality Control is the means by which the Contractor ensures that the construction, to include that of subcontractors and suppliers, complies with the requirements of the contract. At least three phases of control shall be conducted by the CQC System Manager for each definable feature of work as follows:

3.6.1 Preparatory Phase

This phase shall be performed prior to beginning work on each definable feature of work, after all required plans/documents/materials are approved/accepted, and after copies are at the work site. This phase shall include:

a. A review of the paragraphs of applicable specifications, reference codes, and standards. A copy of those sections of referenced codes and standards applicable to that portion of the work to be accomplished in the field shall be made available by the Contractor at the preparatory inspection. These copies shall be maintained in the field and available for use by Government personnel until final acceptance of the work.

b. A review of the contract drawings.

c. A check to assure that all materials and/or equipment have been tested, submitted, and approved.

d. Review of provisions that have been made to provide required control inspection and testing.

e. Examination of the work area to assure that all required preliminary work has been completed and is in compliance with the contract.

f. A physical examination of required materials, equipment, and sample work to assure that they are on hand, conform to approved shop drawings or submitted data, and are properly stored.

g. A review of the appropriate activity hazard analysis to assure safety requirements are met.

h. Discussion of procedures for controlling quality of the work including repetitive deficiencies. Document construction tolerances and workmanship standards for that feature of work.

i. A check to ensure that the portion of the plan for the work to be performed has been accepted by the Contracting Officer.

j. Discussion of the initial control phase.

k. The Government shall be notified at least 48 hours, excluding non-workdays, in advance of beginning the preparatory control phase. This phase shall include a meeting conducted by the CQC System Manager and attended by the superintendent, other CQC personnel (as applicable), and the foreman responsible for the definable feature. The results of the preparatory phase actions shall be documented by separate minutes prepared by the CQC System

Manager and attached to the daily CQC report. The time and date of the preparatory phase meeting shall be logged in RMS QC. The Contractor shall instruct applicable workers as to the acceptable level of workmanship required in order to meet contract specifications.

3.6.2 Initial Phase

This phase shall be accomplished at the beginning of each definable feature of work. The following shall be accomplished:

a. A check of work to ensure that it is in full compliance with contract requirements. Review minutes of the preparatory meeting.

b. Verify adequacy of controls to ensure full contract compliance. Verify required control inspection and testing.

c. Establish level of workmanship and verify that it meets minimum acceptable workmanship standards. Compare with required sample panels as appropriate.

d. Resolve all differences.

e. Check safety to include compliance with and upgrading of the safety plan and activity hazard analysis. Review the activity analysis with each worker.

f. The Government shall be notified at least 24 hours, excluding non-workdays, in advance of beginning the initial phase. Separate minutes of this phase shall be prepared by the CQC System Manager and attached to the daily CQC report. Exact location of initial phase shall be indicated for future reference and comparison with follow-up phases.

g. The initial phase should be repeated for each new crew to work onsite, or any time acceptable specified quality standards are not being met.

3.6.3 Follow-up Phase

Daily checks shall be performed to assure control activities, including control testing, are providing continued compliance with contract requirements, until completion of the particular feature of work. The checks shall be made a matter of record in the CQC documentation. Final follow-up checks shall be conducted and all deficiencies corrected prior to the start of additional features of work which may be affected by the deficient work. The Contractor shall not build upon nor conceal non-conforming work.

3.6.4 Additional Preparatory and Initial Phases

Additional preparatory and initial phases shall be conducted on the same definable features of work if: the quality of on-going work is unacceptable; if there are changes in the applicable CQC staff, onsite production supervision or work crew; if work on a definable feature is resumed after a substantial period of inactivity; or if other problems develop.

3.7 TESTS

3.7.1 Testing Procedure

The Contractor shall perform specified or required tests to verify that control measures are adequate to provide a product which conforms to contract requirements. Upon request, the Contractor shall furnish to the Government duplicate samples of test specimens for possible testing by the Government. Testing includes operation and/or acceptance tests when specified. The Contractor shall procure the services of a Corps of Engineers approved testing laboratory or establish an approved testing laboratory at the project site. The Contractor shall perform the following activities and record and provide the following data:

a. Verify that testing procedures comply with contract requirements.

b. Verify that facilities and testing equipment are available and comply with testing standards.

c. Check test instrument calibration data against certified standards.

d. Verify that recording forms and test identification control number system, including all of the test documentation requirements, have been prepared.

e. Results of all tests taken, both passing and failing tests, shall be recorded on the CQC report for the date taken. Specification paragraph reference, location where tests were taken, and the sequential control number identifying the test shall be given or logged into RMS. If approved by the Contracting Officer, actual test reports may be submitted later with a reference to the test number and date taken. An information copy of tests performed by an offsite or commercial test facility shall be provided directly to the Contracting Officer. Failure to submit timely test reports as stated may result in nonpayment for related work performed and disapproval of the test facility for this contract.

3.7.2 Testing Laboratories

3.7.2.1 Capability Check

The Government reserves the right to check laboratory equipment in the proposed laboratory for compliance with the standards set forth in the contract specifications and to check the laboratory technician's testing procedures and techniques. Laboratories utilized for testing soils, concrete, asphalt, and steel shall meet criteria detailed in ASTM D 3740 and ASTM E 329.

3.7.2.2 Capability Recheck

If the selected laboratory fails the capability check, the Contractor will be assessed a charge to reimburse the Government for each succeeding recheck of the laboratory or the checking of a subsequently selected laboratory. Such costs will be deducted from the contract amount due the Contractor.

3.7.3 Onsite Laboratory

The Government reserves the right to utilize the Contractor's control testing laboratory and equipment to make assurance tests, and to check the

Contractor's testing procedures, techniques, and test results at no additional cost to the Government.

3.8 COMPLETION INSPECTION

3.8.1 Punch-Out Inspection

Near the end of the work, or any increment of the work established by a time stated in the Special Clause, "Commencement, Prosecution, and Completion of Work", or by the specifications, the CQC Manager shall conduct an inspection of the work. A punch list of items that do not conform to the approved drawings and specifications shall be prepared and included in the CQC documentation, as required by paragraph DOCUMENTATION. The list of deficiencies shall include the estimated date by which the deficiencies will be corrected. The CQC System Manager or staff shall make a second inspection to ascertain that all deficiencies have been corrected. Once this is accomplished, the Contractor shall notify the Government that the facility is ready for the Government Pre-Final inspection.

3.8.2 Pre-Final Inspection

The Government will perform the pre-final inspection to verify that the facility is complete and ready to be occupied. A Government Pre-Final Punch List may be developed as a result of this inspection. The Contractor's CQC System Manager shall ensure that all items on this list have been corrected before notifying the Government, so that a Final inspection with the customer can be scheduled. Any items noted on the Pre-Final inspection shall be corrected in a timely manner. These inspections and any deficiency corrections required by this paragraph shall be accomplished within the time slated for completion of the entire work or any particular increment of the work if the project is divided into increments by separate completion dates.

3.8.3 Final Acceptance Inspection

The Contractor's Quality Control Inspection personnel, plus the superintendent or other primary management person, and the Contracting Officer's Representative shall be in attendance at the final acceptance inspection. Additional Government personnel including, but not limited to, those from Base/Post Civil Facility Engineer, user groups, and major commands may also be in attendance. The final acceptance inspection will be formally scheduled by the Contracting Officer based upon results of the Pre-Final inspection. Notice shall be given to the Contracting Officer at least 14 days prior to the final acceptance inspection and shall include the Contractor's assurance that all specific items previously identified to the Contractor as being unacceptable, along with all remaining work performed under the contract, will be complete and acceptable by the date scheduled for the final acceptance inspection. Failure of the Contractor to have all contract work acceptably complete for this inspection will be cause for the Contracting Officer to bill the Contractor for the Government's additional inspection cost in accordance with the contract clause titled "Inspection of Construction".

3.9 DOCUMENTATION

The Contractor shall maintain current records providing factual evidence that required quality control activities and/or tests have been performed. These records shall include the work of subcontractors and suppliers and shall be on an acceptable form that includes, as a minimum, the following

information:

a. Contractor/subcontractor and their area of responsibility.

b. Operating plant/equipment with hours worked, idle, or down for repair.

c. Work performed each day, giving location, description, and by whom. When Network Analysis (NAS) is used, identify each phase of work performed each day by NAS activity number.

d. Test and/or control activities performed with results and references to specifications/drawings requirements. The control phase shall be identified (Preparatory, Initial, Follow-up). List of deficiencies noted, along with corrective action.

e. Quantity of materials received at the site with statement as to acceptability, storage, and reference to specifications/drawings requirements.

f. Offsite surveillance activities, including actions taken.

g. Job safety evaluations stating what was checked, results, and instructions or corrective actions.

h. Instructions given/received and conflicts in plans and/or specifications.

i. Contractor's verification statement.

These records shall indicate a description of trades working on the project; the number of personnel working; weather conditions encountered; and any delays encountered. These records shall cover both conforming and deficient features and shall include a statement that equipment and materials incorporated in the work and workmanship comply with the contract. The original and one copy of these records in report form shall be furnished to the Government daily within 24 hours after the date covered by the report. All calendar days shall be accounted for throughout the life of the contract. The first report following a day of no work shall be for that day only. Reports shall be signed and dated by the CQC System Manager. The report from the CQC System Manager shall include copies of test reports and copies of reports prepared by all subordinate quality control personnel.

3.10 SAMPLE FORMS

Sample forms are enclosed as attachments at the end of this section.

3.11 NOTIFICATION OF NONCOMPLIANCE

The Contracting Officer will notify the Contractor of any detected noncompliance with the foregoing requirements. The Contractor shall take immediate corrective action after receipt of such notice. Such notice, when delivered to the Contractor at the work site, shall be deemed sufficient for the purpose of notification. If the Contractor fails or refuses to comply promptly, the Contracting Officer may issue an order stopping all or part of the work until satisfactory corrective action has been taken. No part of the time lost due to such stop orders shall be made the subject of claim for extension of time or for excess costs or damages

by the Contractor.

SECTION 01451 ATTACHMENT NO.1
GUIDE FOR LISTING DEFINABLE FEATURES OF CONSTRUCTION WORK

****** Contractor shall modify this guide to accommodate the project *****

DIVISION 1 - GENERAL REQUIREMENTS

(a) Special Project procedures to include coordination of work, Project meetings, Submittals and Quality Control
(b) Administrative Requirements
(c) Environmental Protection
(d) Historic Preservation
(e) Job Conditions

DIVISION 2 - SITE WORK

(a) Demolition
(b) Removal and Disposal of Asbestos Materials
(c) Excavation, Trenching and Backfilling for Utilities Systems to include sewer gravity drainage and water lines
(d) Clearing and Grubbing, Backfilling for Buildings
(e) Grading
(f) Fence, Chain-Link
(g) Concrete for sidewalks and Curbs
(h) Drilled Pile Foundation
(i) Bituminous Paving
(j) Underground Sprinkler Systems

DIVISION 3 - CONCRETE

(a) Concrete Materials, Concrete Procedures, Concrete Formwork, Forms, Form Ties and Accessories, Concrete Reinforcement, Concrete Accessories to Include Cast-in-Place Concrete, Specially Placed Concrete, Concrete Finishing, Concrete Curing and Grouting
(b) Concrete Restoration and Cleaning
(c) Precast Concrete
(d) Electrical and Mechanical Inserts
(e) Testing
(f) Approval of Samples

DIVISION 4 - MASONRY

(a) Masonry Procedures, Mortar, Mortar Accessories, Unit Masonry, Cavity Wall Construction to Include Bringing Inner and Outer Wythes Up Simultaneously, Reinforcement, Wall Ties, Flashing, Masonry Restoration and Cleaning
(b) Acceptance of Sample Panel for Cavity Wall Construction
(c) Composite Wall Construction
(d) Acceptance of Sample Panel for Composite Wall Construction
(e) CMU Partition Wall Construction to Include Prepared Openings for Ducts, Fire Dampers, Door Frames, Lintels and Bond Beams
(f) Acceptance of CMU Partition Wall Sample Panel
(g) Insulation and Waterproofing
(h) Testing

DIVISION 5 - METALS

(a) Structural Steel Framing To Include Metal Materials and Methods, Metal Fastening, Metal Joints, Welding, Expansion Control and Miscellaneous Metals
(b) Steel Roof Decking
(c) High Strength Bolts

DIVISION 6 - WOODS AND PLASTICS

(a) Rough Carpentry To Include Framing, Prefabricated Structural Wood, Fasteners and Supports, Roof Sheeting, Siding and Sub-Flooring, Insulation and Flashing (b) Finish Carpentry To Include Wood Treatment, Finish Flooring, Cabinets and Closets

DIVISION 7 - THERMAL AND MOISTURE PROTECTION

(a) Damproofing and Waterproofing
(b) Fireproofing
(c) Insulation, Flashing and Sheet Metal, Roof Accessories, Sealants, Shingles, Roof Tiles and Membrane Roofing (Built-Up and EPDM)

DIVISION 8 - DOORS AND WINDOWS

(a) Metal Doors and Frames, Wood and Plastic Doors, Special Doors, Door Opening Assemblies, Metal Windows, Wood and Plastic Windows, Special Windows, Glazing and Miscellaneous Hardware, Caulking

DIVISION 9 - FINISHES

(a) Ceramic Tile
(b) Gypsum Wallboard To Include Special Framing, Shaft Wall Framing System, Ceiling and Wall Opening
(c) Acoustical Treatment to include Metal Suspension System for Acoustical Tile and Lay-In-Panel Ceiling
(d) Wall Covering
(e) Carpeting
(f) Resilient Flooring
(g) Painting
(h) Furring (Metal)
(i) Plastering

DIVISION 10 - SPECIALTIES

(a) Metal Toilet Partitions
(b) Raised Floor System
(c) Movable Partitions
(d) Wardrobe
(e) Fire Extinguisher Cabinets
(f) Toilet Accessories

DIVISION 11 - EQUIPMENT

(a) Fueling System for Motor Vehicles
(b) Adjustable Loading Ramps
(c) Incinerator, Packaged Controlled Air
(d) Incinerator, Medical Waste, General Purpose, Field Erected
(e) Food Service Equipment
(f) Government Furnished Equipment

DIVISION 12 - FURNISHINGS

(a) Theater Chairs
(b) Blinds
(c) Drapes
(d) Lockers
(e) Training Equipment
(f) Furniture and Accessories
(g) Rugs and Mats
(h) Fabrics

DIVISION 13 - SPECIAL CONSTRUCTION

(a) RF Shielding
(b) Sky Lights
(c) Swimming Pool
(d) Energy Monitoring and Control System (EMCS)
(e) Pre-Engineered Structures
(f) Liquid and Gas Storage Tanks
(g) Vaults

DIVISION 14 - CONVEYING SYSTEMS

(a) Shaft Construction To Include Guides and Guide Rails
(b) Car Assembly
(c) Machine Room Layout
(d) Entrances
(e) Operating and Signal Devices
(f) Fire/Emergency Power Operations
(g) Lighting, Power and Wiring
(h) Elevator Power Unit
(i) Acceptance Testing To Include Communications, Safety, Weights, Emergency and Fire Operations, Dispatch System

DIVISION 15 - MECHANICAL

(a) Insulation to Include:
(1) Pipes
(2) Ducts
(3) Equipment
(4) High Density Inserts, Insulation Protective Shields, Clips or U Bolt Supports for Multiple Pipe Hanger Supports
(5) Perimeter Insulation
(b) Plumbing Systems
(1) Waste/Vent Piping To Include: Underground Soil Piping, Above Ground Soil Piping
(2) Interior Piping Rough-In To Include: Galvanized Black Iron and Copper Including Drains, Fittings, Valves and Piping Supports
(3) Plumbing Fixtures To Include Flush Valves, Faucets and Accessories
(4) Cleaning, Balancing and Operational Testing
(c) Heating systems
(1) Equipment and System Accessories
(2) Hot Water/Steam Piping Supports
(3) Fuel Oil/Gas Piping and Supports
(4) System Testing and Balancing
(d) Air Distribution Systems
(1) Equipment and Accessories

(2) Duct Work To Include Galvanized, Aluminum, Flexible and Fiberglass, Supports, Dampers, Louvers, Diffusers, Duct Line Supports and Fire-Dampers

(e) Refrigeration Systems
(1) Equipment and Accessories
(2) Chilled Water/Condenser Water Piping and Supports
(3) Refrigerant Piping and Supports
(4) System Testing

(f) Automatic Temperature Control Systems
(1) Equipment and Materials
(2) Installation of Materials and Equipment
(3) System Testing

(g) Underground Heat Distribution Systems
(1) Manholes
(2) Piping and Supports
(3) Cathodic Protection

(h) Sprinkler Systems
(1) Equipment
(2) Piping and Supports
(3) Accessories

(i) Water Treatment Systems

(j) Welding - Piping Systems

DIVISION 16 - ELECTRICAL

(a) Exterior Electrical Distribution, Aerial
(1) Pole Setting
(2) Placement of Crossarms, Pins, Insulators, Pole Line Hardware and Conductors
(3) Placement of Fuse Cutouts, Surge Arresters, Reclosers, Potheads, Pole Mounted Transformers to Include Grounding Conductors, Testing and Cable Terminations

(b) Exterior Electrical Distribution, Underground
(1) Duct Line Excavation, Placement of Ducts and Misc. Materials
(2) Placement of In Ground Junction or Pull Boxes and Manholes
(3) Placement of Duct Bank Concrete Encasement
(4) Transformer Pad Placement
(5) Mounting of Pad Mounted Transformers
(6) Cable Placement to Include Splicing, Fire-Proofing and Cable Terminations
(7) Grounding Conductors and Testing

(c) Electrical Distribution, Interior
(1) Wiring Methods to Include Conduit Rough-in, Raceway Boxes, Outlet Boxes, Panelboard Cabinets, Placement of Conductors and Conduit Placement Below the Slab for Slab-On-Grade Construction
(2) Wiring Devices, Panelboards, Switch-Boards and Lighting Fixtures
(3) Motors and Transformers
(4) Testing

(d) Fire Detection and Alarm System
(1) Wiring Methods to Include Conduit, Ground Rods, Detectors, Control Panels, Power Supply, Door Holders, Audible Fire Alarm and Annunciator Panel
(2) Testing

---End of Attachment No.1---

SECTION 01451 ATTACHMENT NO.2
PREPARATORY PHASE CHECKLIST

CONTRACTOR'S NAME (Address)

Contract No.:_____ Date Preparatory Held:_____

Title: _____ Spec Section:_____

_____ Drawing No(s):_____

Definable Feature of Work:_____

_____

A. PERSONNEL PRESENT:

Name	Position	Company
1.		
2.		
3.		
4.		
5.		
6.		
7.		
8.		

(List additional personnel on reverse side)

B. DRAWINGS AND SPECS:

I. Has each spec paragraph, contract drawing, and shop drawing been studied? YES _____ NO _____

II. Do all parties have up-to-date drawings and specifications? YES _____ NO_____

C. SHOP DRAWINGS INVOLVED:

Transmittal/Item	Code	Contractor or Gov't Approval
1.		
2.		
3.		
4.		

ATTACHMENT NO.2 (continued)
D. MATERIALS:

I. Are all materials on hand? YES _____ NO _____

II. Have all materials been checked for contract compliance against approved shop drawings? YES _____ NO _____

III. Items not on hand or not in accordance with transmittals (if not on hand, check during initial phase):

1. _____

2. _____

3. _____

4. _____

E. TESTS required in accordance with contract requirements:

Test/Paragraph	Frequency
1. _____	_____
2. _____	_____
3. _____	_____
4. _____	_____
5. _____	_____
6. _____	_____

F. ACCIDENT PREVENTION: Has Hazard Analysis been completed?
YES _____ NO _____
If yes, attach a copy, if no, explain:

_____

_____

_____

_____

_____

ATTACHMENT NO.2 (continued)

G. EQUIPMENT Requiring Operational Check:

1._____

2._____

3._____

4._____

H. WORKMANSHIP: Have procedures for accomplishing work been reviewed with appropriate people? YES _____ NO _____

I. PREVIOUS WORK: Has all preliminary work been accomplished in accordance with contract requirements and is this feature of work ready to start? YES _____ NO _____

Explain any problems: _____

_____

_____

_____

J. HI-LIGHTING SPECIFIC ITEMS: Hi-light specific items noted during the Preparatory Phase inspection. ie, (Med. Voltage cable shall be hi-pot tested).

K. OTHER COMMENTS: _____

_____

_____

_____

_____
Quality Control Representative
Signature

SECTION 01451 ATTACHMENT NO.3
INITIAL PHASE CHECKLIST

CONTRACTOR'S NAME (Address)

Contract No.:_____ Date Initial Held: _____

Title:_____ Spec Section:_____

Drawing No(s).:_____

Definable Feature of Work:_____

_____

_____

A. PERSONNEL PRESENT:

Name Position Company

1._____

2._____

3._____

4._____

5._____

6._____

B. MATERIALS being used are in strict accordance with the contract plans and specifications? YES _____ NO _____

If not, explain:_____

_____

_____

_____

ATTACHMENT NO.3 (continued)

C. WORKMANSHIP:

I. Procedures and/or work methods witnessed are in strict compliance with the requirement of the contract specifications? YES _____ NO _____

If not, explain: _____

_____

_____

II. Workmanship is acceptable? YES _____ NO _____

State area where improvement is needed: _____

_____

_____

D. SAFETY violations and corrective action taken:_____

_____

_____

E. COMMENTS: _____

_____

_____

_____

_____

_____
Quality Control Representative
Signature

_____

SECTION 01451 ATTACHMENT NO.4
DAILY CONSTRUCTION QUALITY CONTROL REPORT (RMS QC)

CONTRACTORS QUALITY CONTROL REPORT (QCR)
DAILY OG OF CONSTRUCTION - MILITARY
REPORT NUMBER
1 PAGE 1 DATE
29 Feb 00 - Tuesday PROJECT

Sample Project ND RMS, Langley AFB, Virginia
CONTRACT NUMBER

DACA65-99-C-XXXX CONTRACTOR

WEATHER

No Weather Reported

QC NARRATIVES(S)

Activities in Progress:
Include comments here.
Did anything develop that may lead to a Change Order/Claim?
No
Safety Inspection / Safety Meeting:
Include meetings here.

Safety: Inspections made, Deficiencies noted):
Include safety inspections and safety deficiencies here.

Safety: Correction Action taken:
Corrective Action

Verbal Instructions given by Government:
Include instructions here.

Were there any Delays in Work Progress today?
None.
PREP/INITIAL DATES (Preparatory and initial dates held and advance notice)

No preparatory or initial inspections were held today.
ACTIVITY START/FINISH

No activities were started or finished today.
QC REQUIREMENTS

No QC requirements were completed today.

CONTRACTORS QUALITY CONTROL REPORT (QCR)
DAILY OG OF CONSTRUCTION - MILITARY
REPORT NUMBER
1 PAGE 2 DATE
29 Feb 00 - Tuesday PROJECT

Sample Project ND RMS, Langley AFB, Virginia
CONTRACT NUMBER

DACA65-99-C-XXXX QA/QC COMMENT**S** (Describe QC comments issued, report QA and QC comments corrected)

No QC comments were issued today.CONTRACTORS ON SITE(Report contractor's first and/or last date on site)

No contractors were reported on site today. LABOR HOURS

No labor hours were reported today. EQUIPMENT HOURS

No equipment hours were reported today.
EQUIPMENT CHECKS

No equipment inspections were conducted today.
SAFETY CORRECTIONS (Report corrective actions for safety violations)

No outstanding safety violations.

CONTRACTOR CERTIFICATION: On behalf of the contractor, I certify that this report is complete and correct and all equipment and material used and work performed during this reporting period are in compliance with the contract plans and specifications, to the best of my knowledge, except as noted above.
QC REPRESENTATIVE'S SIGNATURE DATE

SUPERINTENDENT'S
INITIALS DATE

SECTION 01451 ATTACHMENT NO.5
TEST REPORT

CONTRACTOR'S NAME (Address)

STRUCTURE OR BUILDING_____
CONTRACT NO._____

DESCRIPTION OF ITEM, SYSTEM OR PART OF SYSTEM TESTED:_____
_____
_____
_____
_____

DESCRIPTION OF TEST:_____
_____
_____
_____
_____

NAME AND TITLE OF PERSON IN CHARGE OF PERFORMING TESTS FOR CONTRACTOR:

NAME_____

TITLE_____

SIGNATURE_____

I HEREBY CERTIFY THAT THE ABOVE DESCRIBED ITEM, SYSTEM OR PART OF SYSTEM HAS BEEN TESTED AS INDICATED ABOVE AND FOUND TO BE ENTIRELY SATISFACTORY AS REQUIRED IN THE CONTRACT SPECIFICATIONS.

SIGNATURE OF CONTRACTOR QUALITY CONTROL INSPECTOR

_____

DATE_____

REMARKS:_____

-- End of Section --

SECTION 01500

TEMPORARY CONSTRUCTION FACILITIES
03/00

PART 1 GENERAL

1.1 GENERAL REQUIREMENTS

1.1.1 Site Plan

The Contractor shall prepare a site plan indicating the proposed location and dimensions of any area to be fenced and used by the Contractor, the number of trailers to be used, entrance(s), utilities, and details of the fence installation. Any areas which may have to be graveled to prevent the tracking of mud shall also be identified. The Contractor shall also indicate any supplemental or other staging area.

1.1.2 Identification of Employees

The Contractor shall be responsible for furnishing to each employee and for requiring each employee engaged on the work to display identification as approved and directed by the Contracting Officer. Prescribed identification shall immediately be delivered to the Contracting Officer for cancellation upon release of any employee. When required, the Contractor shall obtain and provide fingerprints of persons employed on the project. Contractor and subcontractor personnel shall wear identifying markings on hard hats clearly identifying the company for whom the employee works.

1.1.3 Employee Parking

Contractor employees shall park privately owned vehicles in an area designated by the Contracting Officer. This area will be within reasonable walking distance of the construction site. Contractor employee parking shall not interfere with existing and established parking requirements of the facility.

1.2 AVAILABILITY AND USE OF UTILITY SERVICES

1.2.1 Payment for Utility Services

The Government will make all reasonably required utilities available to the Contractor from existing outlets and supplies, as specified in the contract.

1.2.2 Temporary Connections

The Contractor, at its expense and in a workmanlike manner satisfactory to the Contracting Officer, shall provide, install, and maintain all necessary temporary connections and distribution lines. The Contractor shall notify the Contracting Officer, in writing, 5 working days before making final electrical connections.

1.2.3 Sanitation

The Contractor shall provide and maintain within the construction area minimum field-type sanitary facilities approved by the Contracting Officer. Government toilet facilities will not be available to Contractor's

personnel.

1.3 BULLETIN BOARD

1.3.1 Bulletin Board

Within fifteen days after receipt of the Notice To Proceed, the Contractor shall provide a weatherproof bulletin board not less than 36 by 48 inches in size for displaying the Equal Employment Opportunity poster, a copy of the wage decision contained in the contract documents, Wage Rate Information poster, and other information required or approved by the Contracting Officer. The bulletin board shall be located at the project site in a conspicuous place, outside of the contractor's temporary office, easily accessible to all employees, as approved by the Contracting Officer. Legible copies of the aforementioned data shall be displayed until work under this contract is completed. Upon completion of work the bulletin board shall be removed by and remain the property of the Contractor.

1.4 PROTECTION AND MAINTENANCE OF TRAFFIC

During construction the Contractor shall provide access and temporary relocated roads as necessary to maintain traffic. The Contractor shall maintain and protect traffic on all affected roads during the construction period except as otherwise specifically directed by the Contracting Officer. Measures for the protection and diversion of traffic, including the provision of watchmen and flag men, erection of barricades, placing of lights around and in front of equipment and the work, and the erection and maintenance of adequate warning, danger, and direction signs, shall be as required by the State and local authorities having jurisdiction. The traveling public shall be protected from damage to person and property. The Contractor's traffic on roads selected for hauling material to and from the site shall interfere as little as possible with public traffic. The Contractor shall investigate the adequacy of existing roads and the allowable load limit on these roads. The Contractor shall be responsible for the repair of any damage to roads caused by construction operations.

1.4.1 Haul Roads

The Contractor shall, at its own expense, construct access and haul roads necessary for proper prosecution of the work under this contract. Haul roads shall be constructed with suitable grades and widths; sharp curves, blind corners, and dangerous cross traffic shall be avoided. The Contractor shall provide necessary lighting, signs, barricades, and distinctive markings for the safe movement of traffic. The method of dust control shall be adequate to ensure safe operation at all times. Location, grade, width, and alignment of construction and hauling roads shall be subject to approval by the Contracting Officer. Lighting shall be adequate to assure full and clear visibility for full width of haul road and work areas during any night work operations. Upon completion of the work, haul roads designated by the Contracting Officer shall be removed.

1.4.2 Barricades

The Contractor shall erect and maintain temporary barricades to limit public access to hazardous areas. Such barricades shall be required whenever safe public access to paved areas such as roads, parking areas or sidewalks is prevented by construction activities or as otherwise necessary to ensure the safety of both pedestrian and vehicular traffic. Barricades shall be securely placed, clearly visible with adequate illumination to

provide sufficient visual warning of the hazard during both day and night. Barricades and other physical protection shall be in accordance with EM 385-1-1.

1.5 CONTRACTOR'S TEMPORARY FACILITIES

1.5.1 Administrative Field Offices and Storage Areas

The Contracting Officer will designate an area within which the Contractor shall be permitted to place administrative or storage trailers for equipment and limited construction materials other than in trailers. The Contractor shall provide and maintain administrative field office facilities within the construction area at the designated site. Government office and warehouse facilities will not be available to the Contractor's personnel.

1.5.1.1 Storage Area(s)

The Contractor shall construct a temporary 6-foot high chain link fence around all trailers and materials. The fence shall include "tennis court" type mesh as indicated on the drawings, such that visibility through the fence is obstructed. Fence posts may be driven in lieu of concrete bases where soil conditions permit. No trailers, materials, or equipment shall be placed or stored outside the fenced area unless such trailers, materials or equipment are assigned a separate and distinct storage area by the CO away from the vicinity of the construction site but within the boundaries of the Post. At no time shall trailers, equipment or materials be open to public view with the exception of those items which are in support of ongoing work on any given day. Materials shall not be stockpiled outside the fence in preparation for the next day's work. At the end of each work day, mobile equipment such as tractors, wheeled lifting equipment, cranes, trucks and like equipment shall be parked within the fenced area.

1.5.1.2 Supplemental Storage Area(s)

Upon request of the Contractor, the CO will designate another or supplemental area for the Contractor's use and storage of trailers, equipment and materials. This area may not be in close proximity to the construction site, but shall be within the boundaries of the Post. Fencing of materials or equipment will not be required at this site; however, the Contractor shall be responsible for cleanliness and orderliness of the storage area used. The Contractor shall be responsible for the security of any materials or equipment stored in this area. No utilities will be provided to this area by the Government.

1.5.1.3 Appearance of Trailers

Trailers utilized by the Contractor, whether for the purpose of administrative use or materials storage, shall present a clean and neat exterior appearance and be in a state of good repair. Trailers which, in the opinion of the CO, are not in good repair shall not be allowed on the Post.

1.5.1.4 Equipment

Any item of construction equipment, with the exception of hand tools, which becomes inoperable shall be repaired within five (5) working days or removed from the construction site.

1.5.1.5 Maintenance of Storage Area(s)

It shall be the responsibility of the Contractor to keep all fencing in a state of good repair and proper alignment. Should the Contractor elect to traverse grassed or other areas without paving that are not established roadways, with construction equipment or other vehicles, such grassed or other areas shall be covered with a layer of gravel as necessary to prevent rutting and to prevent the tracking of mud onto paved or established roadways. Gradation of the gravel shall be at the discretion of the Contractor. The Contractor shall be responsible for the cutting of grass located within the boundaries of the construction site for the duration of the project. Grass and vegetation along fences, buildings, under trailers and in areas not accessible to mowers shall be edged or trimmed neatly.

1.6 Telephone

The Contractor shall be responsible for making all arrangements and paying all cost for telephone facilities he may require.

1.6.1 Security Provisions

Adequate outside security lighting shall be provided at the Contractor's temporary facilities. The Contractor shall be responsible for the security of its own equipment.

1.7 CLEANUP

Construction debris, waste materials, packaging material and the like shall be removed from the work site daily. Any dirt or mud which is tracked onto paved or surfaced roadways shall be immediately cleaned away. Materials resulting from demolition activities which are salvageable shall be stored within the fenced area described above or at the supplemental storage area. Stored material not in trailers, whether new or salvaged, shall be neatly stacked when stored.

1.8 RESTORATION OF STORAGE AREA

Upon completion of the project and after removal of trailers, materials, and equipment from within the fenced area, the fence shall be removed and will become the property of the Contractor. Areas used by the Contractor for the storage of equipment or material, or other use, shall be restored to the original or better condition. Gravel used to traverse grassed areas shall be removed and the area restored to its original condition, including top soil and seeding as necessary.

1.9 BULLETIN BOARD, PROJECT SIGN, AND PROJECT SAFETY SIGN

1.9.1 Bulletin Board

Within fifteen days after receipt of the Notice to Proceed, the Contractor shall provide a weatherproof bulletin board not less than 36 by 48 inches in size for displaying the Equal Employment Opportunity poster, a copy of the wage decision contained in the contract documents, Wage Rate information poster, and other information required or approved by the Contracting Officer. The bulletin board shall be located at the project site in a conspicuous place, outside of the Contractor's temporary office, easily accessible to all employees, as approved by the Contracting Officer. Legible copies of the aforementioned data shall be displayed until work under this contract is completed. Upon completion of work the bulletin

board shall be removed by and remain the property of the Contractor.

1.9.2 Project and Safety Signs

The requirements for the signs, their content, and location shall be provided at a location designated by the Contracting Officer. The signs shall be erected within 15 days after receipt of the Notice to Proceed. The data required by the safety sign shall be corrected daily, with light colored metallic or non-metallic numerals. Upon completion of the project, the signs shall be removed and disposed of by the Contractor

1.9.2.1 Project Sign

The project sign shall conform to the requirements as indicated on Attachment No. 2, U.S. Air Force ACC MCP Project Sign Details attached hereto.

1.9.2.2 Safety Sign

The safety sign shall conform to the requirements as indicated on Attachment Nos. 1A and 1B, attached hereto. The data required by the sign shall be corrected daily, with light colored metallic or non-metallic numerals. Numerals, including mounting hardware, shall be subject to the approval of the CO.

1.9.2.3 Payment

No separate payment will be made for the sign work covered under this section of the specifications and all costs in connection therewith will be considered as a subsidiary obligation of the Contractor, covered by the contract prices in this contract.

PART 2 PRODUCTS (Not Applicable)

PART 3 EXECUTION

-- End of Section --

SIGN ERECTION DETAILS

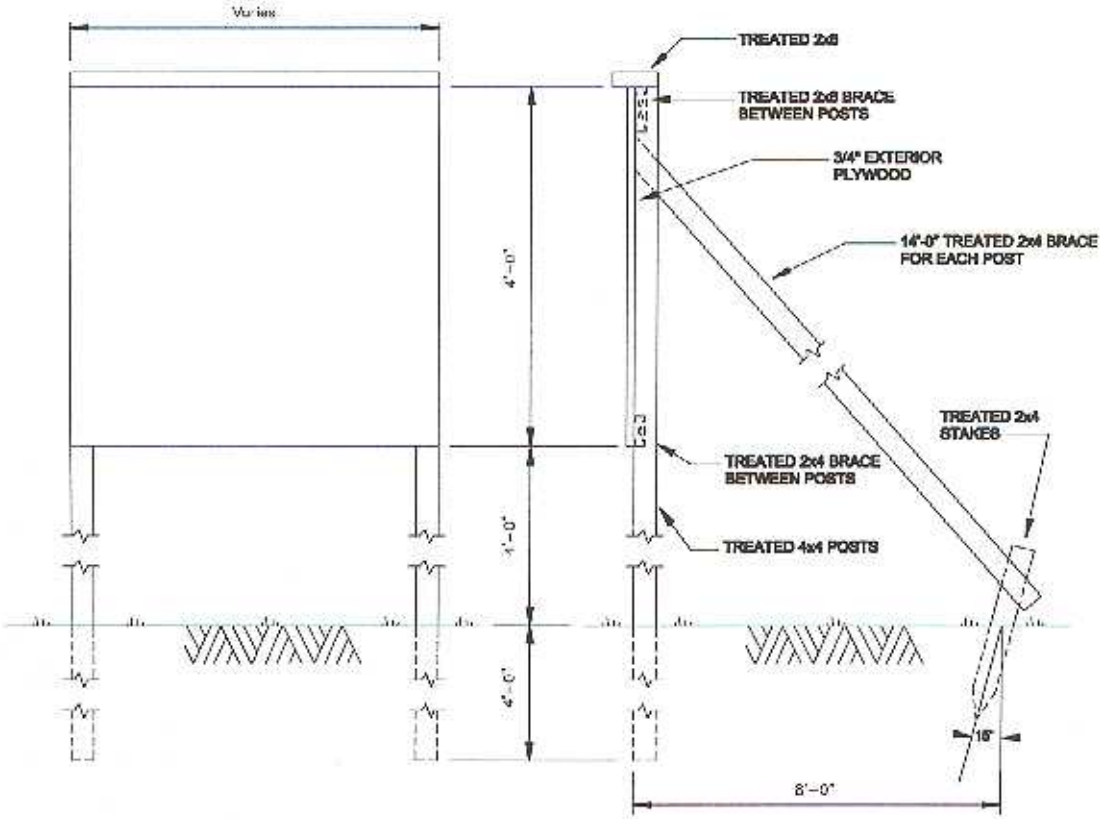

Attachment 1B

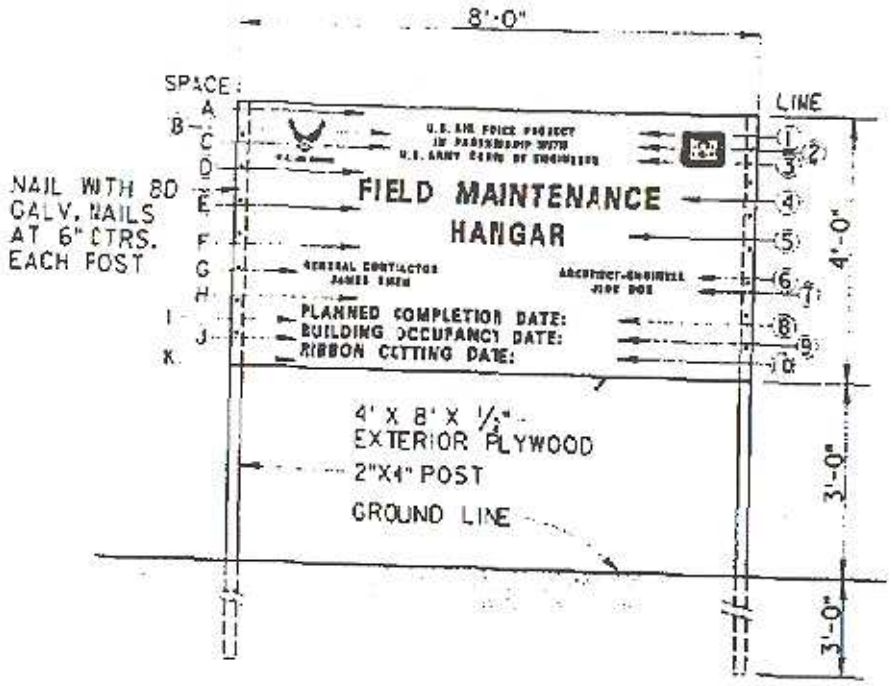

FRONT VIEW

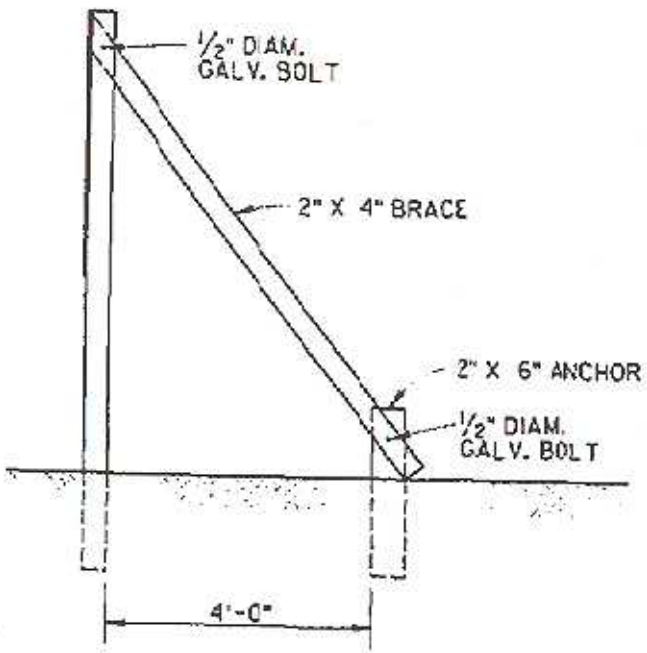

END VIEW

U.S. AIR FORCE ACC MCP PROJECT SIGN DETAILS

NOTES:

1. POSTS SHALL BE S4S.
2. PLYWOOD SHALL BE EXTERIOR TYPE, A-C GRADE.
3. BEFORE PAINTING, SURFACE SHALL BE CLEAN, DRY, FREE OF GREASE AND SANDED.
4. PAINT WITH ONE EXTERIOR OIL PRIME COAT AND EXTERIOR TYPE ALKYD, CONFORMING TO MASTER PAINTERS INSTITUTE MPI-9, MPI GLOSS LEVEL 6. COLOR SHALL MATCH SHERWIN WILLIAMS SW 2175.
5. ALL LETTERING SHALL BE EXTERIOR TYPE ALKYD. COLOR SHALL MATCH SHERVIN WILLIAMS SW 1900.
6. DECALOMANIA FOR CORPS OF ENGINEERS INSIGNIA AND U.S. AIR FORCE EMBLEM WILL BE FURNISHED BY THE CONTRACTING OFFICER FOR INSTALLATION BY THE CONTRACTOR.
7. ALL EXPOSED WOOD (POSTS, SUPPORTS, BACK, ETC.) SHALL BE PAINTED THE SAME BACKGROUND COLOR AS THE SIGN.
8. LETTERING STYLE SHALL BE EITHER HELIOS EXTRA BOLD CONDENSED, HELIOS BOLD II, HELVETICA BLACK ROMAN, OR HELVETICA BOLD ROMAN.

SCHEDULE

SPACE	HEIGHT	LINE	DESCRIPTION	LETTER HEIGHT	STROKE
A	3"	1	U.S. AIR FORCE PROJECT	1.5"	3/16"
B	1"	2	IN PARTNERSHIP WITH	1.5"	3/16"
C	1"	3	U.S. ARMY CORPS OF ENGINEERS	1.5"	3/16"
D	4"	4	PROJECT NAME	4"	1/2"
E	3"	5	PROJECT NAME CONT'D (IF REQ'D)	4"	1/2"
F	4"	6	GENERAL CONTRACTOR/A-E	1.5"	3/16"
G	1"	7	GENERAL CONTRACTOR/A-E	1.5"	3/16"
H	4"	8	PLANNED COMPLETION DATE	2.5"	1/4"
I	1"	9	BUILDING OCCUPANCY DATE	2.5"	1/4"
J	1"	10	RIBBON CUTTING DATE	2.5"	1/4"
K	2"				

Atch 2

SAFETY SIGN

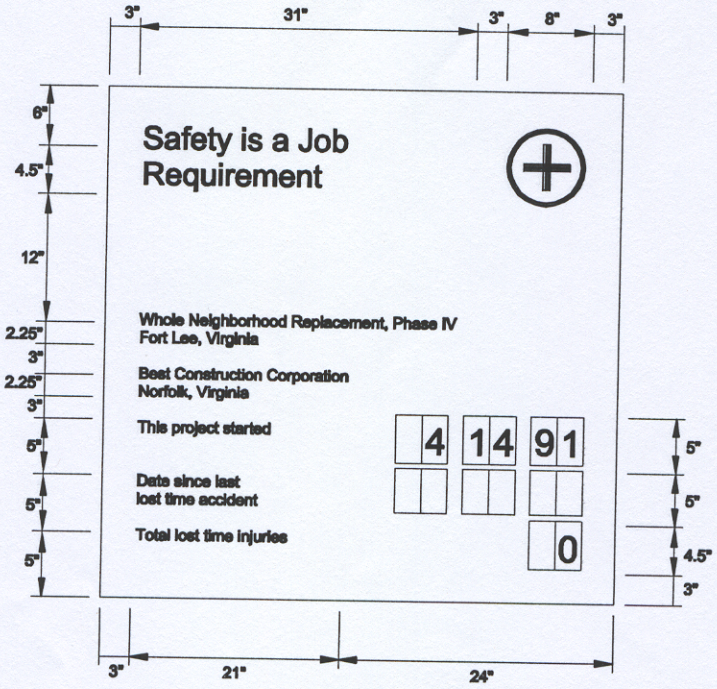

All typography is flush left and rag right, upper and lower case with initial capitals only as shown. Letter and word spacing to follow Corps Standards (EP 310-1-6a and 6b).

Legend Group 1: Standard two-line title "Safety is a Job Requirement" with (8" od.) Safety Green First Aid logo. Typeface: 3" Helvetiva Bold; Color: Black.

Legend Group 2: One to two-line project title legend describes the work being done under this contract and name of host project. Typeface: 1.5" Helvetica Regular; Color: Black; Maximum line length: 42".

Legend Group 3: One to two-line identification: name of prime contractor and city, state address. Typeface: 1.5" Helvetica Regular; Color: Black; Maximum line length: 42".

Legend Group 4: Standard safety record captions as shown. Typeface 1.25" Helvetica Regular; Color: Black.

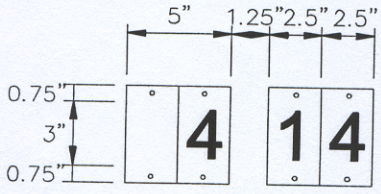

Replaceable numbers are to be mounted on white 0.060 aluminum plates and screw-mounted to backdrop. Typeface: 3" Helvetica Regular; Color: Black; Plate size: 2.5"x 4.5".

Attachment 1A

SECTION 01572

CONSTRUCTION AND DEMOLITION WASTE MANAGEMENT
9/01

PART 1 GENERAL

1.1 GOVERNMENT POLICY

Government policy is to apply sound environmental principles in the design, construction and use of facilities. As part of the implementation of that policy the Contractor shall: (1) practice efficient waste management when sizing, cutting, and installing products and materials and (2) use all reasonable means to divert construction and demolition waste from landfills and incinerators and to facilitate their recycling or reuse.

1.2 SUBMITTALS

SD-01 Preconstruction Submittals

Waste Management Plan; G

Contractor shall submit a waste management plan in writing within 15 days of contract award.

SD-11 Closeout Submittals

Contractor shall submit records of all waste generated to Contracting Officer upon completion of the construction.

1.3 MANAGEMENT

The Contractor shall take a pro-active, responsible role in the management of construction and demolition waste and require all subcontractors, vendors, and suppliers to participate in the effort. Construction and demolition waste includes products of demolition or removal, excess or unusable construction materials, packaging materials for construction products, and other materials generated during the construction process but not incorporated into the work. In the management of waste consideration shall be given to the availability of viable markets, the condition of the material, the ability to provide the material in suitable condition and in a quantity acceptable to available markets, and time constraints imposed by internal project completion mandates. The Contractor shall be responsible for implementation of any special programs involving rebates or similar incentives related to recycling of waste. Revenues or other savings obtained for salvage, or recycling shall accrue to the Contractor. Firms and facilities used for recycling, reuse, and disposal shall be appropriately permitted for the intended use to the extent required by federal, state, and local regulations.

Ensure the weight (in tons) of all demolition debris and construction debris is reported to the Contracting Officer to forward to 1 CES/CEVP.

In compliance with AFI 32-7086 para 2.6.9.2, the contractor will list in the contract all hazardous materials (by product or chemical name) and estimated amounts in pounds or gallons that he plans on using on a project in the contract. The Contracting Officer will in turn get this list of

items to CEVP as soon as he/she gets it. CEVP needs to be completely aware of all hazardous materials used on the installation.

In addition, ensure that at the end of the projects/construction, the contractors take their hazardous materials with them. Contracting Officer is responsible for ensuring the contractor takes his paints, solvents, and other hazardous materials with him when the project is complete and forward to 1 CES/CEVP.

1.4 WASTE MANAGEMENT PLAN

A waste management plan shall be submitted within 15 days after contract award and prior to initiating any site preparation work. The plan shall include the following:

a. Name of individuals on the Contractor's staff responsible for waste prevention and management.

b. Actions that will be taken to reduce solid waste generation.

c. Description of the specific approaches to be used in recycling/reuse of the various materials generated, including the areas and equipment to be used for processing, sorting, and temporary storage of wastes.

d. Characterization, including estimated types and quantities, of the waste to be generated.

e. Name of landfill and/or incinerator to be used and the estimated costs for use, assuming that there would be no salvage or recycling on the project.

f. Identification of local and regional reuse programs, including non-profit organizations such as schools, local housing agencies, and organizations that accept used materials such as materials exchange networks and Habitat for Humanity.

g. List of specific waste materials that will be salvaged for resale, salvaged and reused, or recycled. Recycling facilities that will be used shall be identified.

h. Identification of materials that cannot be recycled/reused with an explanation or justification.

i. Anticipated net cost savings determined by subtracting Contractor program management costs and the cost of disposal from the revenue generated by sale of the materials and the incineration and/or landfill cost avoidance.

1.5 RECORDS

Records shall be maintained to document the quantity of waste generated; the quantity of waste diverted through sale, reuse, or recycling; and the quantity of waste disposed by landfill or incineration. The records shall be made available to the Contracting Officer during construction, and a copy of the records shall be delivered to the Contracting Officer upon completion of the construction.

1.6 COLLECTION

See notes on drawings and in demolition specification for additional requirements.

The necessary containers, bins and storage areas to facilitate effective waste management shall be provided and shall be clearly and appropriately identified. Recyclable materials shall be handled to prevent contamination of materials from incompatible products and materials and separated by one of the following methods:

1.6.1 Source Separated Method.

Waste products and materials that are recyclable shall be separated from trash and sorted into appropriately marked separate containers and then transported to the respective recycling facility for further processing.

1.6.2 Co-Mingled Method.

Waste products and recyclable materials shall be placed into a single container and then transported to a recycling facility where the recyclable materials are sorted and processed.

1.6.3 Other Methods.

Other methods proposed by the Contractor may be used when approved by the Contracting Officer.

1.7 DISPOSAL

Except as otherwise specified in other sections of the specifications, disposal shall be in accordance with the following:

1.7.1 Reuse

First consideration shall be given to salvage for reuse since little or no re-processing is necessary for this method, and less pollution is created when items are reused in their original form. Sale or donation of waste suitable for reuse shall be considered. Salvaged materials, other than those specified in other sections to be salvaged and reinstalled, shall not be used in this project.

1.7.2 Recycle

Waste materials not suitable for reuse, but having value as being recyclable, shall be made available for recycling whenever economically feasible.

1.7.3 Waste

Materials with no practical use or economic benefit shall be disposed at a landfill or incinerator.

-- End of Section --

SECTION 01670

RECYCLED / RECOVERED MATERIALS

9/01

PART 1 GENERAL

1.1 REFERENCES

The publications listed below form a part of this specification to the extent referenced. The publications are referred to in the text by basic designation only.

U.S. NATIONAL ARCHIVES AND RECORDS ADMINISTRATION (NARA)

40 CFR 247	Comprehensive Procurement Guideline for Products Containing Recovered Material

1.2 OBJECTIVES

Government procurement policy is to acquire, in a cost effective manner, items containing the highest percentage of recycled and recovered materials practicable consistent with maintaining a satisfactory level of competition without adversely affecting performance requirements or exposing suppliers' employees to undue hazards from the recovered materials. The Environmental Protection Agency (EPA) has designated certain items which must contain a specified percent range of recovered or recycled materials. EPA designated products specified in this contract comply with the stated policy and with the EPA guidelines. The Contractor shall make all reasonable efforts to use recycled and recovered materials in providing the EPA designated products and in otherwise utilizing recycled and recovered materials in the execution of the work.

1.3 EPA DESIGNATED ITEMS INCORPORATED IN THE WORK

Various sections of the specifications contain requirements for materials that have been designated by EPA as being products which are or can be made with recovered or recycled materials. These items, when incorporated into the work under this contract, shall contain at least the specified percentage of recycled or recovered materials unless adequate justification (non-availability) for non-use is provided. When a designated item is specified as an option to a non-designated item, the designated item requirements apply only if the designated item is used in the work.

1.4 EPA PROPOSED ITEMS INCORPORATED IN THE WORK

Products other than those designated by EPA are still being researched and are being considered for future Comprehensive Procurement Guideline (CPG) designation. It is recommended that these items, when incorporated in the work under this contract, contain the highest practicable percentage of recycled or recovered materials, provided specified requirements are also met.

EPA ITEMS CONSIDERED FOR CPG III DESIGNATION

Carpet Runners
Flooring Materials
Hardboard
Medium Density Fiberboard
Nylon Carpet
Particleboard
Interior Trim and Window Frames
Roofing Materials
Rubberized Asphalt
Building Blocks
Decking Material
Plastic Pipe
Aggregates
Concrete Containing Silica Fume
BUILDING INSULATION
Fiberglass
Cellulose Loose-Fill and Spray-on
Plastic Rigid Foam
Polyurethane:
Rigid Foam
Foam-in-Place
Phenolic Rigid Foam
FIBERBOARD/PAPERBOARD
Structural Fiberboard
Paminated paperboard
HYDRAULIC MULCH
Paper based hydr. mulch
Wood based hydr. mulch
LAWN & GARDEN EDGING
Lawn and garden edging

1.5 EPA LISTED ITEMS USED IN CONDUCT OF THE WORK BUT NOT INCORPORATED IN THE WORK

There are many products listed in 40 CFR 247 which have been designated or proposed by EPA to include recycled or recovered materials that may be used by the Contractor in performing the work but will not be incorporated into the work. These products include office products, temporary traffic control products, and pallets. It is recommended that these non-construction products, when used in the conduct of the work, contain the highest practicable percentage of recycled or recovered materials and that these products be recycled when no longer needed.

-- End of Section --

SECTION 01780

CLOSEOUT SUBMITTALS
05/00

PART 1 GENERAL

1.1 SUBMITTALS

The following shall be submitted in accordance with Section 01330 SUBMITTAL PROCEDURES.

SD-11 Closeout Submittals

As-Built Drawings; G

Drawings showing final as-built conditions of the project. The final CADD as-built drawings shall consist of one set of electronic CADD drawing files in the specified format, one set of mylar drawings, 2 sets of blue-line prints of the mylars, and one set of the approved working as-built drawings.

As-Built Record of Equipment and Materials; G

Two copies of the record listing the as-built materials and equipment incorporated into the construction of the project.

Final Approved Shop Drawings; G

Two copies of the final approved as-built shop drawings as described below.

Construction Contract Specifications; G

Two copies of the as-built specifications as described below.

Real Property Equipment; G

Three copies of the draft and three copies of the final "Equipment in Place List" as described below.

Warranty Management Plan; G.

Three sets of the warranty management plan containing information relevant to the warranty of materials and equipment incorporated into the construction project, including the starting date of warranty of construction. The Contractor shall furnish with each warranty the name, address, and telephone number of each of the guarantor's representatives nearest to the project location.

Warranty Tags;

Two record copies of the warranty tags showing the layout and design.

Final Clean-Up; G

Two copies of the listing of completed final clean-up items.

1.2 PROJECT RECORD DOCUMENTS

1.2.1 As-Built Drawings

This paragraph covers as-built drawings complete, as a requirement of the contract. The terms "drawings," "contract drawings," "drawing files," "working as-built drawings" and "final as-built drawings" refer to contract drawings which are revised to be used for final as-built drawings.

1.2.1.1 Government Furnished Materials

One set of electronic CADD files in the specified software and format revised to reflect all bid amendments will be provided by the Government at the preconstruction conference for projects requiring CADD file as-built drawings.

1.2.1.2 Working As-Built and Final As-Built Drawings

The Contractor shall revise 2 sets of paper drawings by red-line process to show the as-built conditions during the prosecution of the project. These working as-built marked drawings shall be kept current on a weekly basis and at least one set shall be available on the jobsite at all times. Changes from the contract plans which are made in the work or additional information which might be uncovered in the course of construction shall be accurately and neatly recorded as they occur by means of details and notes. Final as-built drawings shall be prepared after the completion of each definable feature of work as listed in the Contractor Quality Control Plan (Foundations, Utilities, Structural Steel, etc., as appropriate for the project). The working as-built marked prints and final as-built drawings will be jointly reviewed for accuracy and completeness by the Contracting Officer and the Contractor prior to submission of each monthly pay estimate. If the Contractor fails to maintain the working and final as-built drawings as specified herein, the Contracting Officer will deduct from the monthly progress payment an amount representing the estimated cost of maintaining the as-built drawings. This monthly deduction will continue until an agreement can be reached between the Contracting Officer and the Contractor regarding the accuracy and completeness of updated drawings. The working and final as-built drawings shall show, but shall not be limited to, the following information:

a. The actual location, kinds and sizes of all sub-surface utility lines. In order that the location of these lines and appurtenances may be determined in the event the surface openings or indicators become covered over or obscured, the as-built drawings shall show, by offset dimensions to two permanently fixed surface features, the end of each run including each change in direction. Valves, splice boxes and similar appurtenances shall be located by dimensioning along the utility run from a reference point. The average depth below the surface of each run shall also be recorded.

b. The location and dimensions of any changes within the building structure.

c. Correct grade, elevations, cross section, or alignment of roads, earthwork, structures or utilities if any changes were made from contract plans.

d. Changes in details of design or additional information obtained from working drawings specified to be prepared and/or furnished by the Contractor; including but not limited to fabrication, erection, installation plans and placing details, pipe sizes, insulation material,

dimensions of equipment foundations, etc.

e. The topography, invert elevations and grades of drainage installed or affected as part of the project construction.

f. Changes or modifications which result from the final inspection.

g. Where contract drawings or specifications present options, only the option selected for construction shall be shown on the final as-built prints.

h. If borrow material for this project is from sources on Government property, or if Government property is used as a spoil area, the Contractor shall furnish a contour map of the final borrow pit/spoil area elevations.

i. Systems designed or enhanced by the Contractor, such as HVAC controls, fire alarm, fire sprinkler, and irrigation systems.

j. Modifications (change order price shall include the Contractor's cost to change working and final as-built drawings to reflect modifications) and compliance with the following procedures.

(1) Directions in the modification for posting descriptive changes shall be as follows.

(2) A Modification Circle shall be placed at the location of each deletion. Modification Circle is a circle with the identification of the modification number in the center.

(3) For new details or sections which are added to a drawing, a Modification Circle shall be placed by the detail or section title.

(4) For minor changes, a Modification Circle shall be placed by each area changed on the drawing (each location).

(5) For major changes to a drawing, a Modification Circle shall be placed by the title of the affected plan, section, or detail at each location.

(6) For changes to schedules or drawings, a Modification Circle shall be placed either by the schedule heading or by the change in the schedule.

(7) The Modification Circle size shall be 1/2 inch diameter unless the area where the circle is to be placed is crowded. Smaller size circle shall be used for crowded areas.

k. Final As-Built Drawings. When the as-built drawings are completed, and prior to submission to the Government, the contractor shall indicate on each drawing, in the lower right hand corner, in bold letters at least 1/4" high, "AS-BUILT DRAWING".

1.2.1.3 Drawing Preparation

The as-built drawings shall be modified as may be necessary to correctly show the features of the project as it has been constructed by bringing the contract set into agreement with approved working as-built prints, and adding such additional drawings as may be necessary. These working as-built marked prints shall be neat, legible and accurate. These drawings

are part of the permanent records of this project and shall be returned to the Contracting Officer after approval by the Government. Any drawings damaged or lost by the Contractor shall be satisfactorily replaced by the Contractor at no expense to the Government.

1.2.1.4 Computer Aided Design and Drafting (CADD) Drawings

Only personnel proficient in the preparation of CADD drawings shall be employed to modify the contract drawings or prepare additional new drawings. Additions and corrections to the contract drawings shall be equal in quality and detail to that of the originals. Line colors, line weights, lettering, layering conventions, and symbols shall be the same as the original line colors, line weights, lettering, layering conventions, and symbols. If additional drawings are required, they shall be prepared using the specified electronic file format applying the same graphic standards specified for original drawings. The title block and drawing border to be used for any new final as-built drawings shall be identical to that used on the contract drawings. Additions and corrections to the contract drawings shall be accomplished using CADD files. The Contractor will be furnished electronic copies of Contract Drawings in AutoCad Release 2000 software format. The electronic files will be supplied on compact disc, read-only memory (CD-ROM). The Contractor shall be responsible for providing all program files and hardware necessary to prepare final as-built drawings. The Contracting Officer will review final as-built drawings for accuracy and the Contractor shall make required corrections, changes, additions, and deletions.

a. CADD colors shall follow the color scheme of the original drawing. Layer code for changes shall be as follows:

(1) Deleted Items - Deleted graphic items (lines) shall be colored red with red lettering in notes and leaders and moved to a layer named "DELETED ITEMS" and that layer shall be "frozen" from plotting.

(2) Added Items - Added items shall be drawn in colors to match the original drawing but shall be placed on a layer called "ITEMS ADDED BY CHANGE ORDER".

(3) Special Items - Items requiring special information, coordination, or special detailing or detailing notes shall follow the drawing color scheme and be placed on a layer called "SPECIAL REQUIREMENTS".

b. The Contract Drawing files shall be renamed in a manner related to the contract number (i.e., 98-C-10.dwg) as instructed in the Pre-Construction conference. Marked-up changes shall be made only to those renamed files. All changes shall be made on the layer/level as the original item. There shall be no deletions of existing lines; existing lines shall be changed to red and moved to the "DELETED ITEMS" layer.

c. When final revisions have been completed, the cover sheet drawing shall show the wording "RECORD DRAWING AS-BUILT" followed by the name of the Contractor in letters at least 1/4 inch high. All other contract drawings shall be marked either "AS-Built" drawing denoting no revisions on the sheet or "Revised As-Built" denoting one or more revisions. Original contract drawings shall be dated in the revision block.

d. Within 20 days after Government approval of all of the working as-built drawings for a phase of work, the Contractor shall prepare the final CADD as-built drawings for that phase of work and submit two sets of blue-lined prints of these drawings for Government review and approval. The Government will promptly return one set of prints annotated with any necessary corrections. Within 10 days the Contractor shall revise the CADD files accordingly at no additional cost and submit one set of final prints for the completed phase of work to the Government. Within 20 days of substantial completion of all phases of work, the Contractor shall submit the final as-built drawing package for the entire project. The submittal shall consist of one set of electronic files on compact disc, read-only memory (CD-ROM), one set of mylars, two sets of blue-line prints and one set of the approved working as-built drawings. They shall be complete in all details and identical in form and function to the contract drawing files supplied by the Government. Any transactions or adjustments necessary to accomplish this is the responsibility of the Contractor. The Government reserves the right to reject any drawing files it deems incompatible with the customer's CADD system. Paper prints, drawing files and storage media submitted will become the property of the Government upon final approval. Failure to submit final as-built drawing files and marked prints as specified shall be cause for withholding any payment due the Contractor under this contract. Approval and acceptance of final as-built drawings shall be accomplished before final payment is made to the Contractor.

1.2.1.5 Payment

Payment will be made under separate line item for as-built drawings required under this contract as indicated in the Bid Schedule. No progress payments will be made on this line item. The full amount of the line item for As-Built Drawings will be paid upon satisfactory completion and acceptance of as-built drawings.

1.2.2 As-Built Record of Equipment and Materials

The Contractor shall furnish 2 copies of preliminary record of equipment and materials used on the project 20 days prior to final inspection. This preliminary submittal will be reviewed and returned 2 days after final inspection with Government comments. Two sets of final record of equipment and materials shall be submitted 10 days after final inspection. The designations shall be keyed to the related area depicted on the contract drawings. The record shall list the following data:

RECORD OF DESIGNATED EQUIPMENT AND MATERIALS DATA

Description	Specification Section	Manufacturer and Catalog, Model, and Serial Number, Company Telephone Number	Composition and Size	Where Used

1.2.3 Final Approved Shop Drawings

The Contractor shall furnish final approved project shop drawings 30 days after transfer of the completed facility.

1.2.4 Construction Contract Specifications

The Contractor shall furnish final as-built construction contract specifications, including modifications thereto, 30 days after transfer of the completed facility.

1.2.5 Real Property Equipment

The Contractor shall furnish a list of installed equipment furnished under this contract. The list shall include all information usually listed on manufacturer's name plate. The "EQUIPMENT-IN-PLACE LIST" shall include, as applicable, the following for each piece of equipment installed: description of item, location (by room number), model number, serial number, capacity, name and address of manufacturer, name and address of equipment supplier, condition, spare parts list, manufacturer's catalog, and warranty. A draft list shall be furnished at time of transfer. The final list shall be furnished 30 days after transfer of the completed facility.

1.2.6 Recording Construction Data

a. During the progress of the work, the Contractor shall keep a careful record at the job site of all changes, corrections, and deviations from the layouts and details shown on the drawings to include all contract modifications. The Contractor shall enter such changes on project drawings promptly, but not later than on a weekly basis.

b. Where underground utilities are installed, note the elevation of the utility installed every 30 feet. Where new utilities cross existing utilities, note the elevation of the new and existing utility and the vertical and/or horizontal separation. Where new utilities run parallel to new and existing utilities, note the elevation at which installed and the horizontal and/or vertical separation between utilities.

(1) GIS Data: The Contractor shall use conventional surveying and other methods, such as a total station or Global Positioning Systems (GPS) for collection of as-built information at an accuracy level in accordance with "Geospatial Positioning Accuracy Standards, Part 3: National Standard for Spatial Data Accuracy," published by the Federal Geographic Data Committee (FGDC), dated July 1998. This document can be found at http://www.fgdc.gov/standards/status/sub1_3.html. All Survey data collected shall be provided to the Government in a digital format with an attached Survey Report identifying survey method, equipment list, calibration documentation, survey layout, description of control points, control diagrams, and field survey data. A Survey Control Database (consisting of a survey marker database and a survey traverse database) will be produced for all survey control points established under this contract, and delivered in a .dbf or ASCII comma-delimited format. If GPS is used, the contractor shall use survey grade GPS, at an accuracy level of +/- 2cm., when appropriate, to collect data to be overlaid onto the installation's orthophotograph and/or base map.

(2) All locational feature data (points, lines, polygons) collected shall be delivered in Arc/Info format along with the original source files. The Geospatial files shall have an external spatial reference file (.prj) attached specifying the

parameters of the coordinate system used (as provided by the government). All topologically correct geospatial data shall overlay on the installations latest orthorectified imagery provided by the government. All accuracy errors shall be reported to the contract project manager.

(3) Feature Attributes: The contractor shall identify the classification, type, size, location, ID number, and any other necessary attributes (specified by the Government) for all surveyed, mapped, designed, or proposed features. All symbol libraries, font libraries, text sizes, text formats, and text placements should be prepared in accordance with the SDS where practical. The contractor shall not develop new libraries without prior written approval from the Government.

(4) All graphic and non-graphic data will be collected in the format defined by the CADD/GIS Technology Center's Spatial Data Standards (SDS) release 2.0 (or the most current version available), except where modified by the Government. This document can be found at http://tsc.wes.army.mil/products/tssds-tsfms/tssds/projects/sds/.

(5) The Contractor shall provide metadata files for all locational data produced under this contract. The metadata file shall conform to the Federal Geographic Data Committee's "Content Standard for Digital Geospatial Metadata, Version 2.0" (or latest version) found at http://www.fgdc.gov/metadata/contstan.html. The output from metadata generator software shall be the standard format for all metadata files created under this contract. In addition, the metadata data shall be provided in ASCII text format. The digital metadata files shall be provided to the Government along with each product deliverable, unless otherwise approved in writing by the Government.

(6) The Government will provide the contractor with data and information concerning all necessary and pertinent functions and principal features of the identified project. These items will include:

(a) The installation's latest georeferenced digital planimetric data and/or base map in ESRI Arc/Info format, or best format available, with associated data files.

(b) The installation's latest orthorectified imagery and specified geospatial parameters (coordinate system, datum, projection, distance units).

(c) Any pertinent and necessary prototype or seed files.

(d) A copy of CADD/GIS Technology Center's Spatial Data Standards (SDS) release 1.95 (or latest version) on CD-ROM.

(e) A copy of "Geospatial Positioning Accuracy Standards, Part 3: National Standard for Spatial Data Accuracy," published by the Federal Geographic Data Committee (FGDC) in Adobe Acrobat Reader (.pdf) format.

(f) Frequency settings for the Real-Time Kinematic (RTK) GPS Base Station and the preferred GPS receiver specifications.

(g) Any other data or schematics deemed necessary for project completion, pending approval from the Government.

c. At the time of beneficial occupancy, the Contractor shall submit as-built data to the Contracting Officer, or his/her designated representative incorporating the aforementioned information into

the project drawings. The Contractor shall also ensure a copy of all as-built data is delivered to the Base GeoBase office. The as-built deliverable (plans, shop drawings, surveys, studies, imagery, designs, manuals, spare parts lists, etc.) shall be in a digital (electronic information) format and shall be delivered on standard compact disks (minimum 650 megabytes) in a format that is directly compatible with the CADD/GIS Technology Center's Spatial Data Standards version 2.0 (or latest version available). No "red-line" or marked-up drawings will be accepted.

1.3 WARRANTY MANAGEMENT

1.3.1 Warranty Management Plan

The Contractor shall develop a warranty management plan which shall contain information relevant to the clause Warranty of Construction in Section 00700. At least 30 days before the planned pre-warranty conference, the Contractor shall submit the warranty management plan for Government approval. The warranty management plan shall include all required actions and documents to assure that the Government receives all warranties to which it is entitled. The plan shall be in narrative form and contain sufficient detail to render it suitable for use by future maintenance and repair personnel, whether tradesmen, or of engineering background, not necessarily familiar with this contract. The term "status" as indicated below shall include due date and whether item has been submitted or was accomplished. Warranty information made available during the construction phase shall be submitted to the Contracting Officer for approval prior to each monthly pay estimate. Approved information shall be assembled in a binder and shall be turned over to the Government upon acceptance of the work. The construction warranty period shall begin on the date of project acceptance and shall continue for the full product warranty period. A joint 4 month and 9 month warranty inspection shall be conducted, measured from time of acceptance, by the Contractor, Contracting Officer and the Customer Representative. Information contained in the warranty management plan shall include, but shall not be limited to, the following:

a. Roles and responsibilities of all personnel associated with the warranty process, including points of contact and telephone numbers within the organizations of the Contractors, subcontractors, manufacturers or suppliers involved.

b. Listing and status of delivery of all Certificates of Warranty for extended warranty items, to include roofs, HVAC balancing, pumps, motors, transformers, and for all commissioned systems such as fire protection and alarm systems, sprinkler systems, lightning protection systems, etc.

c. A list for each warranted equipment, item, feature of construction or system indicating:

1. Name of item.
2. Model and serial numbers.
3. Location where installed.
4. Name and phone numbers of manufacturers or suppliers.
5. Names, addresses and telephone numbers of sources of spare parts.
6. Warranties and terms of warranty. This shall include one-year overall warranty of construction. Items which have extended warranties shall be indicated with separate warranty expiration dates.

7. Cross-reference to warranty certificates as applicable.
8. Starting point and duration of warranty period.
9. Summary of maintenance procedures required to continue the warranty in force.
10. Cross-reference to specific pertinent Operation and Maintenance manuals.
11. Organization, names and phone numbers of persons to call for warranty service.
12. Typical response time and repair time expected for various warranted equipment.

d. The Contractor's plans for attendance at the 4 and 9 month post-construction warranty inspections conducted by the Government.

e. Procedure and status of tagging of all equipment covered by extended warranties.

f. Copies of instructions to be posted near selected pieces of equipment where operation is critical for warranty and/or safety reasons.

1.3.2 Performance Bond

The Contractor's Performance Bond shall remain effective throughout the construction period.

a. In the event the Contractor fails to commence and diligently pursue any construction warranty work required, the Contracting Officer will have the work performed by others, and after completion of the work, will charge the remaining construction warranty funds of expenses incurred by the Government while performing the work, including, but not limited to administrative expenses.

b. In the event sufficient funds are not available to cover the construction warranty work performed by the Government at the Contractor's expense, the Contracting Officer will have the right to recoup expenses from the bonding company.

c. Following oral or written notification of required construction warranty repair work, the Contractor shall respond in a timely manner. Written verification will follow oral instructions. Failure of the Contractor to respond will be cause for the Contracting Officer to proceed against the Contractor.

1.3.3 Pre-Warranty Conference

Prior to contract completion, and at a time designated by the Contracting Officer, the Contractor shall meet with the Contracting Officer to develop a mutual understanding with respect to the requirements of this section. Communication procedures for Contractor notification of construction warranty defects, priorities with respect to the type of defect, reasonable time required for Contractor response, and other details deemed necessary by the Contracting Officer for the execution of the construction warranty shall be established/reviewed at this meeting. In connection with these requirements and at the time of the Contractor's quality control completion inspection, the Contractor shall furnish the name, telephone number and address of a licensed and bonded company which is authorized to initiate and pursue construction warranty work action on behalf of the Contractor. This point of contact will be located within the local service area of the warranted

construction, shall be continuously available, and shall be responsive to Government inquiry on warranty work action and status. This requirement does not relieve the Contractor of any of its responsibilities in connection with other portions of this provision.

1.3.4 Contractor's Response to Construction Warranty Service Requirements

Following oral or written notification by the Contracting Officer, the Contractor shall respond to construction warranty service requirements in accordance with the "Construction Warranty Service Priority List" and the three categories of priorities listed below. The Contractor shall submit a report on any warranty item that has been repaired during the warranty period. The report shall include the cause of the problem, date reported, corrective action taken, and when the repair was completed. If the Contractor does not perform the construction warranty within the timeframes specified, the Government will perform the work and backcharge the construction warranty payment item established.

a. First Priority Code 1. Perform onsite inspection to evaluate situation, and determine course of action within 4 hours, initiate work within 6 hours and work continuously to completion or relief.

b. Second Priority Code 2. Perform onsite inspection to evaluate situation, and determine course of action within 8 hours, initiate work within 24 hours and work continuously to completion or relief.

c. Third Priority Code 3. All other work to be initiated within 3 work days and work continuously to completion or relief.

d. The "Construction Warranty Service Priority List" is as follows:

Code 1-Air Conditioning Systems
(1) Exhaust fans at cooking hoods not working properly.
(2) Air conditioning leak in part of building, if causing damage.
(3) Air conditioning system not cooling properly.
(4) Faulty controls or other equipment

Code 1-Doors
(1) Interior, exterior personnel doors or hardware, not functioning properly, causing a security, fire, or safety problem.

Code 3-Doors
(1) Interior/exterior personnel doors or hardware not functioning properly.

Code 1-Electrical
(1) Power failure (entire area or any building operational after 1600 hours).
(2) Security lights
(3) Smoke detectors

Code 2-Electrical
(1) Power failure (no power to a room or part of building).
(2) Receptacle and lights (in a room or part of building).

Code 3-Electrical
Street lights.

Code 1-Gas

(1) Leaks and breaks.
(2) No gas to family housing unit or cantonment area.

Code 1-Heat
(1) Area power failure affecting heat.
(2) Heating system partial or total failure.

Code 1-Plumbing
(1) Hot water heater failure.
(2) Leaking water supply pipes.

Code 2-Plumbing
(1) Flush valves not operating properly.
(2) Fixture drain, supply line to commode, or any water pipe leaking.
(3) Commode leaking at base.

Code 3-Plumbing
Leaky faucets.

Code 3-Interior
(1) Floors damaged.
(2) Paint chipping or peeling.
(3) Casework.

Code 1-Roof Leaks
Temporary repairs will be made where major damage to property is occurring.

Code 2-Roof Leaks
Where major damage to property is not occurring, check for location of leak during rain and complete repairs on a Code 2 basis.

Code 2-Water (Exterior)
No water to facility.

Code 2-Water (Hot)
No hot water in portion of building listed.

Code 3-All other work not listed above.

1.3.5 Warranty Tags

At the time of installation, each warranted item shall be tagged with a durable, oil and water resistant tag approved by the Contracting Officer. Each tag shall be attached with a copper wire and shall be sprayed with a silicone waterproof coating. The date of acceptance and the QC signature shall remain blank until project is accepted for beneficial occupancy. The tag shall show the following information.

a. Type of product/material_____.

b. Model number_____.

c. Serial number_____.

d. Contract number_____.

e. Warranty period_____from_____to_____.

f. Inspector's signature_____.

g. Construction Contractor_____.

Address_____.

Telephone number_____.

h. Warranty contact_____.

Address_____.

Telephone number_____.

i. Warranty response time priority code_____.

j. WARNING - PROJECT PERSONNEL TO PERFORM ONLY OPERATIONAL MAINTENANCE DURING THE WARRANTY PERIOD.

1.4 MECHANICAL TESTING, ADJUSTING, BALANCING, AND COMMISSIONING

Prior to final inspection and transfer of the completed facility; all reports, statements, certificates, and completed checklists for testing, adjusting, balancing, and commissioning of mechanical systems shall be submitted to and approved by the Contracting Officer as specified in applicable technical specification sections.

1.5 OPERATION AND MAINTENANCE MANUALS

Operation manuals and maintenance manuals shall be submitted as specified. Operation manuals and maintenance manuals provided in a common volume shall be clearly differentiated and shall be separately indexed.

1.6 FINAL CLEAN-UP

The premises shall be left broom clean. Stains, foreign substances, and temporary labels shall be removed from surfaces. Carpet and soft surfaces shall be vacuumed. Equipment and fixtures shall be cleaned to a sanitary condition. Filters of operating equipment shall be replaced. Debris shall be removed from roofs, drainage systems, gutters, and downspouts. Paved areas shall be swept and landscaped areas shall be raked clean. The site shall have waste, surplus materials, and rubbish removed. The project area shall have temporary structures, barricades, project signs, and construction facilities removed. A list of completed clean-up items shall be submitted on the day of final inspection.

PART 2 PRODUCTS (NOT USED)

PART 3 EXECUTION (NOT USED)

-- End of Section --

SECTION 01781

OPERATION AND MAINTENANCE DATA
03/98

PART 1 GENERAL

1.1 SUMMARY

This section includes requirements for developing Operation and Maintenance (O&M) Manuals for the facility being constructed under the contract. The purpose of these manuals is to provide operating and maintenance personnel with organized, factual and concise facility information that describes the operation, maintenance and repair of critical facility systems and that organizes other equipment operations and maintenance data in a manner that is convenient for daily operations and maintenance.

1.2 SUBMITTALS

The following shall be submitted in accordance with Section 01330 SUBMITTAL PROCEDURES unless otherwise specified below

SD-11 Closeout Submittals

Final O&M Manuals; G

Submit five (5) copies of final O&M prior to performing required training.

1.3 O&M MANUALS

Final O&M Manuals will be developed under this contract. Each manual will be subdivided into two parts, Part I - Systems Operations and Maintenance Manuals and Part 2 - Operations and Maintenance Data.

1.3.1 Part I - Systems Operations and Maintenance Manuals

Prepare the information required for Part I using a systems approach. This approach requires that consideration be given to an entire system (i.e., interfaces of equipment, connections and material flow within the system) to provide comprehensive detail on system components operation, preventive maintenance, repair and manufacturer's data for each required system. Provide Part I - Systems Operations and Maintenance Manuals for the facility HVAC systems, condenser and chilled water system, hot water system, fire protection sprinkler system, and fire detection and alarm system.

Organize the Part I - Systems Operations and Maintenance Manuals to include the primary sections listed below.

1.3.1.1 Operation

a. System Description: Provide a detailed discussion of the system composition and operation. Include technical details that are essential for an understanding of the system.

b. Operator Prestart: Include procedures required to set up and prepare each system for use.

c. Start-Up and Shutdown Procedures: Provide step-by-step instructions to bring systems from static to operational configurations and from operating to shutdown status. Include a control sequence for each.

d. Normal Operating Instructions: Provide a discussion of the normal operation and control of the system. Address operating norms (e.g., temperatures, pressures, and flow rates) expected at each zone or phase of the system. Supplement the discussion with control and wiring diagrams and data.

e. Emergency Operating Instructions: Provide emergency operating procedures in the event of equipment malfunctions. Provide shutdown instructions for fires, explosions, spills, or other contingencies.

f. System Flow Diagrams: Provide a flow diagram indicating system liquid, air (do not include ductwork) or gas flow during normal operations. Integrate all system components into the diagram. A compilation of non-integrated, flow diagrams for the individual system components are not acceptable.

g. Diagrammatic Plans: Provide floor plans indicating the location of equipment and configuration of the system installation. Include the configuration of associated piping or wiring. Subordinate structural features to utility features.

h. Environmental Considerations: Provide a listing of the equipment that requires special operation, reporting, testing, analysis or inspection to comply with federal, state or local environmental laws. Examples of possible list items include backflow preventer inspections, underground storage tank testing, hazardous material or waste usage and storage documentation, and air pollution control devices. Each item in the list shall include requirements for environmental operation, reporting, testing, analysis and inspection as well as references to respective implementing regulations, statutes, or policies.

i. Operator Servicing Requirements: Provide instructions for services to be performed by the operator such as lubrication, adjustments, and inspection.

j. Safety Instructions: Provide a list of all personnel hazards and equipment safety precautions including recommended safeguards.

k. Valve List: Provide a list of all valves associated with the system. Show valve type, identification number, function, location and normal operating position.

l. Operating Log: Provide forms, samples, and instructions for keeping necessary operating records.

1.3.1.2 Preventive Maintenance

a. Preventive Maintenance Plan and Schedule: Provide a Preventive Maintenance (PM) plan using manufacturer's recommendations and sound engineering practice. Include all major pieces of equipment. Provide a check sheet that details maintenance tasks and associated frequencies. Also provide an annual schedule

indicating when maintenance tasks should be performed such that work is spread as evenly as possible throughout the year.

b. Preventive Maintenance Procedures: Provide a Task Card for each individual maintenance task identified on the PM Plan and Schedule. Include detailed PM procedures, safety instructions and precautions including Lock Out/Tag Out precautions, required skill level, number of personnel needed, frequency, special tools needed, parts needed, and estimated time required to complete the task.

c. Lubrication Schedule: Provide a lubrication schedule indicating types, grades, and capabilities of lubricants for specific temperature ranges and applications.

d. Preventive Maintenance Log: Provide a tabular form for recording the accomplishment of PM. Log shall record date PM was performed, findings, action taken, parts used, time required to complete the work, and other data necessary to provide a good historical record of PM activities.

1.3.1.3 Repair

a. Troubleshooting Guides and Diagnostic Techniques: Provide step-by-step procedures for isolating the cause of system malfunctions. The procedures shall clearly state indications or symptoms of trouble; the sequential instructions, including checks and tests to be performed and conditions to be sought, to determine the cause; and remedial measures to bring the equipment and system to operating condition. Identify special test equipment required to perform the procedures. Start the troubleshooting guide at the system level and proceed to a level where detailed manufacturer's troubleshooting procedures for equipment and components can be referenced.

b. Repair Procedures: Provide repair instructions required to restore equipment to proper operating standards. References shall be specific as to location within the manuals.

c. Removal and Replacement Instructions: Provide or refer to the manufacturer's data for the instructions on the removal and replacement of equipment components. References shall be specific as to location within the manuals.

1.3.1.4 Manufacturer's Data

a. Operation and Maintenance Data: Include the O&M Data Package information (SD-10 submittals) required for the equipment and systems specified in the technical sections. Incorporate this information into each system discussion under the Operation, Preventive Maintenance and Repair sections of Part I.

b. Manufacturer's Equipment Information: Provide drawings, illustrations and technical data furnished by the manufacturer for the equipment and system components. Organize and index the information for easy reference.

1.3.2 Part II - Operations and Maintenance Data

1.3.2.1 Record of Material and Equipment

Provide a record of materials and equipment used in the facility construction. In general, this will include operations and maintenance data for the facility not otherwise provided in Part I. Include Product Data required in the project specifications. Examples of Product Data include manufacturer's catalog data, instructions, test reports and warranties. Include shop drawings relevant to the operation and maintenance of the facility or system except those used in Part I - System Operation and Maintenance Manuals. Do not include extraneous data (e.g., transmittal sheets, certifications, welder qualifications, contractor qualifications and certificates of compliance). Highlight or note submittals that contain information for several parts or model numbers to identify installed material.

1.3.2.2 Written Warranties

Provide copies of extended equipment warranties.

1.4 FORMAT

Bind the facilities Operations and Maintenance Data in D-ring binders that can be locked. Binders must be capable of holding 8-1/2" x 11" and 11" x 17" sheets and shall have clear pockets located on the front and on the spine to hold printed sheets. Identify each binder on both the cover insert sheet and the spine insert sheet with the following information:

a. O&M System or Data Manual Volume Number.

b. Facility Name.

c. Activity and Location.

d. Construction Contract Number.

Volumes shall be consecutively numbered. Use high quality paper and dividers made of heavy-duty paper with plastic reinforced holes and integrated tabs. Use white tabs to identify Parts I and II and their individual section and subsections. Insert oversized sheets into the binders as single fold-out sheets or place in clear plastic pockets with title exposed.

PART 2 PRODUCTS

Not used.

PART 3 EXECUTION

Not used.

-- End of Section --

SECTION 02220

DEMOLITION
05/01

PART 1 GENERAL

1.1 REFERENCES

The publications listed below form a part of this specification to the extent referenced. The publications are referred to in the text by basic designation only.

AMERICAN NATIONAL STANDARDS INSTITUTE (ANSI)

ANSI A10.6	(1990) Demolition Operations

U.S. NATIONAL ARCHIVES AND RECORDS ADMINISTRATION (NARA)

40 CFR 61 - Subpart M	National Emission Standard for Asbestos

U.S. ARMY CORPS OF ENGINEERS (USACE)

EM 385-1-1	(1996) U.S. Army Corps of Engineers Safety and Health Requirements Manual

1.2 GENERAL REQUIREMENTS

The work includes demolition, salvage of identified items and materials, and removal of resulting rubbish and debris. Rubbish and debris shall be removed from Government property daily, unless otherwise directed, to avoid accumulation at the demolition site. Materials that cannot be removed daily shall be stored in areas specified by the Contracting Officer. In the interest of occupational safety and health, the work shall be performed in accordance with EM 385-1-1, Section 23, Demolition, and other applicable Sections. In the interest of conservation, salvage shall be pursued to the maximum extent possible (in accordance with Section 01572 CONSTRUCTION AND DEMOLITION WASTE MANAGEMENT, if applicable); salvaged items and materials shall be disposed of as specified.

1.3 SUBMITTALS

Government approval is required for submittals with a "G" designation; submittals not having a "G" designation are for information only. When used, a designation following the "G" designation identifies the office that will review the submittal for the Government. The following shall be submitted in accordance with Section 01330 SUBMITTAL PROCEDURES:

SD-03 Product Data

Work Plan; G

The procedures proposed for the accomplishment of the work. The procedures shall provide for safe conduct of the work, including procedures and methods to provide necessary supports, lateral bracing and shoring when required, careful removal and disposition

of materials specified to be salvaged, protection of property which is to remain undisturbed, coordination with other work in progress, and timely disconnection of utility services. The procedures shall include a detailed description of the methods and equipment to be used for each operation, and the sequence of operations in accordance with EM 385-1-1.

1.4 REGULATORY AND SAFETY REQUIREMENTS

The work plan shall comply with federal, state and local hauling and disposal regulations. In addition to the requirements of the "Contract Clauses," safety requirements shall conform with ANSI A10.6.

1.4.1 Notifications

Furnish timely notification of demolition projects to federal, state, regional and local authorities in accordance with 40 CFR 61 - Subpart M. Notify the Contracting Officer Representative in writing 10 days prior to the commencement of work in accordance with 40 CFR 61 - Subpart M.

1.5 DUST CONTROL

The amount of dust resulting from demolition shall be controlled to prevent the spread of dust to occupied portions of the construction site and to avoid creation of a nuisance in the surrounding area. Use of water will not be permitted when it will result in, or create, hazardous or objectionable conditions such as ice, flooding and pollution.

1.6 PROTECTION

1.6.1 Protection of Personnel

During the demolition work the Contractor shall continuously evaluate the condition of the structure being demolished and take immediate action to protect all personnel working in and around the demolition site. No area, section, or component of floors, roofs, walls, columns, pilasters, or other structural element will be allowed to be left standing without sufficient bracing, shoring, or lateral support to prevent collapse or failure while workmen remove debris or perform other work in the immediate area.

1.6.2 Protection of Structures

Floors, roofs, walls, columns, pilasters, and other structural components that are designed and constructed to stand without lateral support or shoring, and are determined to be in stable condition, shall remain standing without additional bracing, shoring, of lateral support until demolished, unless directed otherwise by the Contracting Officer. The Contractor shall ensure that no elements determined to be unstable are left unsupported and shall be responsible for placing and securing bracing, shoring, or lateral supports as may be required as a result of any cutting, removal, or demolition work performed under this contract.

1.6.3 Protection of Existing Property

Before beginning any demolition work, the Contractor shall survey the site and examine the drawings and specifications to determine the extent of the work. The Contractor shall take necessary precautions to avoid damage to existing items to remain in place, to be reused, or to remain the property of the Government; any damaged items shall be repaired or replaced as

approved by the Contracting Officer. The Contractor shall coordinate the work of this section with all other work and shall construct and maintain shoring, bracing, and supports as required. The Contractor shall ensure that structural elements are not overloaded and shall be responsible for increasing structural supports or adding new supports as may be required as a result of any cutting, removal, or demolition work performed under this contract.

1.6.4 Protection From the Weather

The interior of buildings to remain; salvageable materials and equipment shall be protected from the weather at all times.

1.6.5 Protection of Trees

Trees within the project site which might be damaged during demolition, and which are indicated to be left in place, shall be protected by a 6 foot high fence. The fence shall be securely erected a minimum of 5 feet from the trunk of individual trees or follow the outer perimeter of branches or clumps of trees. Any tree designated to remain that is damaged during the work under this contract shall be replaced in kind or as approved by the Contracting Officer.

1.6.6 Environmental Protection

The work shall comply with the requirements of Section 01355 ENVIRONMENTAL PROTECTION.

1.7 BURNING

The use of burning at the project site for the disposal of refuse and debris will not be permitted.

1.8 USE OF EXPLOSIVES

Use of explosives will not be permitted.

1.9 AVAILABILITY OF WORK AREAS

The entire work area will be available for contractors.

1.10 FOREIGN OBJECT DAMAGE (FOD)

Aircraft and aircraft engines are subject to FOD from debris and waste material lying on airfield pavements. Remove all such materials that may appear on operational aircraft pavements due to the Contractor's operations. The Contracting Officer Representative will require the Contractor to install a temporary fence at the Contractor's expense to control the spread of FOD potential debris. The FOD Fence shall be in accordance with Section 02821 and shall be located as shown on the plans or at the direction of the Contracting Officer Representative. Remove fence when no longer required.

1.11 RELOCATIONS

Perform the removal and reinstallation of relocated items as indicated with workmen skilled in the trades involved. Repair items to be relocated which are damaged or replace damaged items with new undamaged items as approved by the Contracting Officer Representative.

PART 2 PRODUCTS (Not Applicable)

PART 3 EXECUTION

3.1 EXISTING STRUCTURES

Existing structures indicated shall be removed completely, or as indicated on the drawings. Basement slabs, sidewalks, curbs, gutters, manholes, drainage inlets, and street light bases shall be removed completely, or as indicated.

3.2 UTILITIES

Disconnection of utility services, with related meters and equipment, are to conform to the nationally recognized code covering the specific utility and approved by the Contracting Officer. Existing utility lines indicated to be abandoned in place shall be disconnected at nearest tee or joint connection and have watertight caps provided. Existing utilities shall be removed as indicated. When utility lines are encountered that are not indicated on the drawings, the Contracting Officer shall be notified prior to further work in that area.

Utility lines indicated to be removed that continue under existing roads or pavements that are not being removed shall be abandoned in place and have water tight caps provided on both ends at a minimum of 5.00' from the curb or nearest manhole.

Existing manholes on abandoned utility lines not noted for removal shall have frame and cover removed and be filled with sand prior to backfilling over structure. Existing manholes noted for removal shall be removed completely including base. Existing manholes noted to be extended to grade shall have risers installed as needed to meet new grade. New frame and cover shall be installed. Structures shall be modified as needed to meet traffic loading requirements for HS-20 traffic. Structures to be modified shall be reviewed and verified for loading by a licensed professional engineer in the State of Virginia.

3.3 FILLING

Holes, open basements and other hazardous openings shall be filled as directed with satisfactory compacted material as described in Section 02315 EXCAVATION, FILLING, AND BACKFILLING FOR BUILDINGS.

3.4 DISPOSITION OF MATERIAL

Title to material and equipment to be demolished, except Government salvage and historical items, is vested in the Contractor upon receipt of notice to proceed. The Government will not be responsible for the condition, loss or damage to such property after notice to proceed.

3.4.1 Salvageable Items and Material

Contractor shall salvage items and material to the maximum extent possible.

3.4.1.1 Material Salvaged for the Contractor

Material salvaged for the Contractor shall be stored as approved by the Contracting Officer and shall be removed from Government property before

completion of the contract. Material salvaged for the Contractor shall not be sold on the site.

3.4.2 Unsalvageable Material

Concrete, masonry, and other noncombustible material, except concrete permitted to remain in place, shall be disposed of in the disposal area located outside the limits of government-controlled lands at the contractor's responsibility. Combustible material shall be disposed of as directed by the Contracting Officer.

3.5 CLEAN UP

Debris and rubbish shall be removed from basement and similar excavations. Debris shall be removed and transported in a manner that prevents spillage on streets or adjacent areas. Clean up spillage from pavements, streets, and adjacent areas to prevent FOD potential. Local regulations regarding hauling and disposal shall apply.

3.6 PAVEMENTS

Existing pavements designated for removal shall be saw cut and removed in accordance with the details shown on the drawings and to the limits. Provide full depth saw cuts at limits of pavement removal as indicated. All pavement removal includes pavement, aggregate base, and aggregate subbase.

-- End of Section --

SECTION 02230

CLEARING AND GRUBBING
06/97

PART 1 GENERAL

1.1 DEFINITIONS

1.1.1 Clearing

Clearing shall consist of the felling, trimming, and cutting of trees into sections and the satisfactory disposal of the trees and other vegetation designated for removal, including down timber, snags, brush, and rubbish occurring in the areas to be cleared.

1.1.2 Grubbing

Grubbing shall consist of the removal and disposal of stumps, roots larger than 3 inches in diameter, and matted roots from the designated grubbing areas.

1.2 SUBMITTALS

Government approval is required for submittals with a "G" designation; submittals not having a "G" designation are for information only. When used, a designation following the "G" designation identifies the office that will review the submittal for the Government. The following shall be submitted in accordance with Section 01330 SUBMITTAL PROCEDURES:

SD-03 Product Data

Materials Other Than Salable Timber

Written permission to dispose of such products on private property shall be filed with the Contracting Officer.

PART 2 PRODUCTS (Not Applicable)

PART 3 EXECUTION

3.1 CLEARING

Trees, stumps, roots, brush, and other vegetation in areas to be cleared shall be cut off flush with or below the original ground surface, except such trees and vegetation as may be indicated or directed to be left standing. Trees designated to be left standing within the cleared areas shall be trimmed of dead branches 1-1/2 inches or more in diameter and shall be trimmed of all branches the heights indicated or directed. Limbs and branches to be trimmed shall be neatly cut close to the bole of the tree or main branches. Cuts more than 1-1/2 inches in diameter shall be painted with an approved tree-wound paint. Trees and vegetation to be left standing shall be protected from damage incident to clearing, grubbing, and construction operations by the erection of barriers or by such other means as the circumstances require. Clearing shall also include the removal and disposal of structures that obtrude, encroach upon, or otherwise obstruct

the work.

3.2 GRUBBING

Material to be grubbed, together with logs and other organic or metallic debris not suitable for foundation purposes, shall be removed to a depth of not less than 18 inches below the original surface level of the ground in areas indicated to be grubbed and in areas indicated as construction areas under this contract, such as areas for buildings, and areas to be paved. Depressions made by grubbing shall be filled with suitable material and compacted to make the surface conform with the original adjacent surface of the ground.

3.3 TREE REMOVAL

Where indicated or directed, trees and stumps that are designated as trees shall be removed from areas outside those areas designated for clearing and grubbing. This work shall include the felling of such trees and the removal of their stumps and roots as specified in paragraph GRUBBING. Trees shall be disposed of as specified in paragraph DISPOSAL OF MATERIALS.

3.4 DISPOSAL OF MATERIALS

3.4.1 Materials Other Than Salable Timber

Logs, stumps, roots, brush, rotten wood, and other refuse from the clearing and grubbing operations, except for salable timber, shall be disposed of outside the limits of Government-controlled land at the Contractor's responsibility, except when otherwise directed in writing. Such directive will state the conditions covering the disposal of such products and will also state the areas in which they may be placed.

-- End of Section --

SECTION 02300

EARTHWORK
12/97

PART 1 GENERAL

1.1 REFERENCES

The publications listed below form a part of this specification to the extent referenced. The publications are referred to in the text by basic designation only.

AMERICAN SOCIETY FOR TESTING AND MATERIALS (ASTM)

ASTM C 136	(1996a) Sieve Analysis of Fine and Coarse Aggregates
ASTM D 422	(1963; R 1998) Particle-Size Analysis of Soils
ASTM D 1140	(1997) Amount of Material in Soils Finer than the No. 200 (75-micrometer) Sieve
ASTM D 1556	(1990; R 1996el) Density and Unit Weight of Soil in Place by the Sand-Cone Method
ASTM D 1557	(1991; R 1998) Laboratory Compaction Characteristics of Soil Using Modified Effort (56,000 ft-lbf/cu. ft. (2,700 kN-m/cu. m.))
ASTM D 2487	(1998) Classification of Soils for Engineering Purposes (Unified Soil Classification System)
ASTM D 2922	(1996el) Density of Soil and Soil-Aggregate in Place by Nuclear Methods (Shallow Depth)
ASTM D 2937	(1994) Density of Soil in Place by the Drive-Cylinder Method
ASTM D 3017	(1988; R 1996el) Water Content of Soil and Rock in Place by Nuclear Methods (Shallow Depth)
ASTM D 4318	(1998) Liquid Limit, Plastic Limit, and Plasticity Index of Soils

1.2 DEFINITIONS

1.2.1 Satisfactory Materials

Satisfactory materials shall comprise any materials classified by ASTM D 2487 as GW, GP, GM, GP-GM, GW-GM, GC, GP-GC, GM-GC, SW, SP, SM, SW-SM, SC,

SW-SC, SP-SM, SP-SC, CL. Satisfactory materials for grading shall be comprised of stones less than 8 inches, except for fill material for pavements and railroads which shall be comprised of stones less than 3 inches in any dimension.

1.2.2 Unsatisfactory Materials

Materials which do not comply with the requirements for satisfactory materials are unsatisfactory. Unsatisfactory materials also include man-made fills; trash; refuse; backfills from previous construction; and material classified as satisfactory which contains root and other organic matter or frozen material. The Contracting Officer shall be notified of any contaminated materials.

1.2.3 Cohesionless and Cohesive Materials

Cohesionless materials include materials classified in ASTM D 2487 as GW, GP, SW, and SP. Cohesive materials include materials classified as GC, SC, ML, CL, MH, and CH. Materials classified as GM and SM will be identified as cohesionless only when the fines are nonplastic. Testing required for classifying materials shall be in accordance with ASTM D 4318, ASTM C 136, ASTM D 422, and ASTM D 1140.

1.2.4 Degree of Compaction

Degree of compaction required is expressed as a percentage of the maximum density obtained by the test procedure presented in ASTM D 1557 abbreviated as a percent of laboratory maximum density.

1.2.5 Topsoil

Material suitable for topsoils shall be obtained from offsite areas or excavations, minimum of 6" thick over the areas to be seeded, sodded, or landscaped.

1.3 SUBMITTALS

Government approval is required for submittals with a "G" designation; submittals not having a "G" designation are for information only. When used, a designation following the "G" designation identifies the office that will review the submittal for the Government. The following shall be submitted in accordance with Section 01330 SUBMITTAL PROCEDURES:

SD-03 Product Data

Selection of Borrow Material; G.

Utilization of Excavated Material; G.

Procedure and location for disposal of unused satisfactory material. Proposed source of borrow material.

Advance notice on the opening of excavation or borrow areas.

SD-06 Test Reports

Testing; G.

Within 24 hours of conclusion of physical tests, 6 copies of test results,

including calibration curves and results of calibration tests.

SD-07 Certificates

Testing; G.

Qualifications of the commercial testing laboratory or Contractor's testing facilities.

1.4 SUBSURFACE DATA

Subsurface soil boring logs for adjacent projects is appended to the special contract requirements. These data represent the best subsurface information available; however, variations may exist in the subsurface between boring locations.

1.5 BLASTING

Blasting will not be permitted.

1.6 UTILIZATION OF EXCAVATED MATERIAL

Unsatisfactory materials removed from excavations shall be disposed of in designated waste disposal or spoil areas off government controlled property. Satisfactory material removed from excavations shall be used, insofar as practicable, in the construction of fills, embankments, subgrades, shoulders, bedding (as backfill), and for similar purposes. No satisfactory excavated material shall be wasted without specific written authorization. Satisfactory material authorized to be wasted shall be disposed of in designated areas approved for surplus material storage or designated waste areas as directed. Coarse rock from excavations shall be stockpiled and used for constructing slopes or embankments adjacent to streams, or sides and bottoms of channels and for protecting against erosion. No excavated material shall be disposed of to obstruct the flow of any stream, endanger a partly finished structure, impair the efficiency or appearance of any structure, or be detrimental to the completed work in any way.

PART 2 PRODUCTS (Not Applicable)

PART 3 EXECUTION

3.1 STRIPPING OF TOPSOIL

Where indicated or directed, topsoil shall be stripped to a depth of 6 inches. Topsoil shall be spread on areas already graded and prepared for topsoil, or transported and deposited in stockpiles convenient to areas that are to receive application of the topsoil later, or at locations indicated or specified. Topsoil shall be kept separate from other excavated materials, brush, litter, objectionable weeds, roots, stones larger than 2 inches in diameter, and other materials that would interfere with planting and maintenance operations. Any surplus of topsoil from excavations and grading shall be stockpiled in locations indicated by the contracting officer.

3.2 GENERAL EXCAVATION

The Contractor shall perform excavation of every type of material encountered within the limits of the project to the lines, grades, and

elevations indicated and as specified. Grading shall be in conformity with the typical sections shown and the tolerances specified in paragraph FINISHING. Satisfactory excavated materials shall be transported to and placed in fill or embankment within the limits of the work. Unsatisfactory materials encountered within the limits of the work shall be excavated below grade and replaced with satisfactory materials as directed. Such excavated material and the satisfactory material ordered as replacement shall be included in excavation. Surplus satisfactory excavated material not required for fill or embankment shall be disposed of in areas approved for surplus material storage or designated waste areas. Unsatisfactory excavated material shall be disposed of in designated waste or spoil areas. During construction, excavation and fill shall be performed in a manner and sequence that will provide proper drainage at all times. Material required for fill or embankment in excess of that produced by excavation within the grading limits shall be excavated from the borrow areas indicated or from other approved areas selected by the Contractor as specified.

3.2.1 Ditches, Gutters, and Channel Changes

Excavation of ditches, gutters, and channel changes shall be accomplished by cutting accurately to the cross sections, grades, and elevations shown. Ditches and gutters shall not be excavated below grades shown. Excessive open ditch or gutter excavation shall be backfilled with satisfactory, thoroughly compacted, material or with suitable stone or cobble to grades shown. Material excavated shall be disposed of as shown or as directed, except that in no case shall material be deposited less than 4 feet from the edge of a ditch. The Contractor shall maintain excavations free from detrimental quantities of leaves, brush, sticks, trash, and other debris until final acceptance of the work.

3.2.2 Drainage Structures

Excavations shall be made to the lines, grades, and elevations shown, or as directed. Trenches and foundation pits shall be of sufficient size to permit the placement and removal of forms for the full length and width of structure footings and foundations as shown. Rock or other hard foundation material shall be cleaned of loose debris and cut to a firm, level, stepped, or serrated surface. Loose disintegrated rock and thin strata shall be removed. When concrete or masonry is to be placed in an excavated area, the bottom of the excavation shall not be disturbed. Excavation to the final grade level shall not be made until just before the concrete or masonry is to be placed.

3.3 SELECTION OF BORROW MATERIAL

Borrow material shall be selected to meet the requirements and conditions of the particular fill or embankment for which it is to be used. Borrow material shall be obtained from the borrow areas from approved private sources. Unless otherwise provided in the contract, the Contractor shall obtain from the owners the right to procure material, pay royalties and other charges involved, and bear the expense of developing the sources, including rights-of-way for hauling. Unless specifically provided, no borrow shall be obtained within the limits of the project site without prior written approval. Necessary clearing, grubbing, and satisfactory drainage of borrow pits and the disposal of debris thereon shall be considered related operations to the borrow excavation.

3.4 OPENING AND DRAINAGE OF EXCAVATION AND BORROW PITS

Except as otherwise permitted, borrow pits and other excavation areas shall be excavated providing adequate drainage. Overburden and other spoil material shall be transported to designated spoil areas or otherwise disposed of as directed. Borrow pits shall be neatly trimmed and drained after the excavation is completed. The Contractor shall ensure that excavation of any area, operation of borrow pits, or dumping of spoil material results in minimum detrimental effects on natural environmental conditions.

3.5 GRADING AREAS

Where indicated, work will be divided into grading areas within which satisfactory excavated material shall be placed in embankments, fills, and required backfills. The Contractor shall not haul satisfactory material excavated in one grading area to another grading area except when so directed in writing.

3.6 BACKFILL

Backfill adjacent to any and all types of structures shall be placed and compacted to at least 95 percent laboratory maximum density except in the final 12 inches beneath pavements and floor slabs where this requirement will be increased to 98 percent laboratory maximum dry density. Fill material shall be placed in lifts not to exceed 8 inches loose thickness. It shall be compacted within 2 percent of optimum moisture content. Ground surface on which backfill is to be placed shall be prepared as specified in paragraph PREPARATION OF GROUND SURFACE FOR EMBANKMENTS. Compaction requirements for backfill materials shall also conform to the applicable portions of paragraphs PREPARATION OF GROUND SURFACE FOR EMBANKMENTS, EMBANKMENTS, and SUBGRADE PREPARATION, and Section 02630 STORM-DRAINAGE SYSTEM; and Section 02316 EXCAVATION, TRENCHING, AND BACKFILLING FOR UTILITIES SYSTEMS. Compaction shall be accomplished by sheepsfoot rollers, pneumatic-tired rollers, steel-wheeled rollers, vibratory compactors, or other approved equipment.

3.7 PREPARATION OF GROUND SURFACE FOR EMBANKMENTS

3.7.1 General Requirements

Ground surface on which fill is to be placed shall be stripped of live, dead, or decayed vegetation, rubbish, debris, and other unsatisfactory material; plowed, disked, or otherwise broken up to a depth of 6 inches; pulverized; moistened or aerated as necessary; thoroughly mixed; and compacted to at least 95 percent laboratory maximum except in the final 12 inches beneath pavements and floor slabs where this requirement will be increased to 98 percent laboratory maximum dry density. Fill material shall be placed in lifts not to exceed 8 inches loose thickness. It shall be compacted within 2 percent of optimum moisture content. Compaction shall be accomplished by sheepsfoot rollers, pneumatic-tired rollers, steel-wheeled rollers, vibratory compactors, or other approved equipment. The prepared ground surface shall be scarified and moistened or aerated as required just prior to placement of embankment materials to assure adequate bond between embankment material and the prepared ground surface.

3.7.2 Frozen Material

Embankment shall not be placed on a foundation which contains frozen material, or which has been subjected to freeze-thaw action. This

prohibition encompasses all foundation types, including the natural ground, all prepared subgrades (whether in an excavation or on an embankment) and all layers of previously placed and compacted earth fill which become the foundations for successive layers of earth fill. All material that freezes or has been subjected to freeze-thaw action during the construction work, or during periods of temporary shutdowns, such as, but not limited to, nights, holidays, weekends, winter shutdowns, or earthwork operations, shall be removed to a depth that is acceptable to the Contracting Officer and replaced with new material. Alternatively, the material will be thawed, dried, reworked, and recompacted to the specified criteria before additional material is placed. The Contracting Officer will determine when placement of fill shall cease due to cold weather. The Contracting Officer may elect to use average daily air temperatures, and/or physical observation of the soils for his determination. Embankment material shall not contain frozen clumps of soil, snow, or ice.

3.8 EMBANKMENTS

3.8.1 Earth Embankments

Earth embankments shall be constructed from satisfactory materials free of organic or frozen material and rocks with any dimension greater than 3 inches. The material shall be placed in successive horizontal layers of loose material not more than 8 inches in depth. Each layer shall be spread uniformly on a soil surface that has been moistened or aerated as necessary, and scarified or otherwise broken up so that the fill will bond with the surface on which it is placed. After spreading, each layer shall be plowed, disked, or otherwise broken up; moistened or aerated as necessary; thoroughly mixed; and compacted to at least 95 percent laboratory maximum density except in the final 12 inches beneath pavements and floor slabs where this requirement will be increased to 98 percent laboratory maximum dry density. Fill material shall be placed in lifts not to exceed 8 inches loose thickness. It shall be compacted within 2 percent of optimum moisture content. Compaction requirements for the upper portion of earth embankments forming subgrade for pavements shall be identical with those requirements specified in paragraph SUBGRADE PREPARATION. Compaction shall be accomplished by sheepsfoot rollers, pneumatic-tired rollers, steel-wheeled rollers, vibratory compactors, or other approved equipment.

3.9 SUBGRADE PREPARATION

3.9.1 Construction

Subgrade shall be shaped to line, grade, and cross section, and compacted as specified. This operation shall include plowing, disking, and any moistening or aerating required to obtain specified compaction. Soft or otherwise unsatisfactory material shall be removed and replaced with satisfactory excavated material or other approved material as directed. Rock encountered in the cut section shall be excavated to a depth of 6 inches below finished grade for the subgrade. Low areas resulting from removal of unsatisfactory material or excavation of rock shall be brought up to required grade with satisfactory materials, and the entire subgrade shall be shaped to line, grade, and cross section and compacted as specified. After rolling, the surface of the subgrade for roadways shall not show deviations greater than 1/2 inch when tested with a 10 foot straightedge applied both parallel and at right angles to the centerline of the area. The elevation of the finish subgrade shall not vary more than 0.05 foot from the established grade and cross section.

3.9.2 Compaction

Compaction shall be accomplished by sheepsfoot rollers, pneumatic-tired rollers, steel-wheeled rollers, vibratory compactors, or other approved equipment. Except for paved areas, each layer of the embankment shall be compacted to at least 95 percent of laboratory maximum density except in the final 12 inches beneath pavements and floor slabs where this requirement will be increased to 98 percent laboratory maximum dry density. Fill material shall be placed in lifts not to exceed 8 inches loose thickness. It shall be compacted within 2 percent of optimum moisture content.

3.9.2.1 Subgrade for Pavements

Subgrade for pavements shall be compacted to at least 95 percentage laboratory maximum density except for the final 12 inches which will be increased to 98 percent laboratory maximum dry density. When more than one soil classification is present in the subgrade, the top 12 inches of subgrade shall be scarified, windrowed, thoroughly blended, reshaped, and compacted.

3.10 FINISHING

The surface of excavations, embankments, and subgrades shall be finished to a smooth and compact surface in accordance with the lines, grades, and cross sections or elevations shown. The degree of finish for graded areas shall be within 0.1 foot of the grades and elevations indicated except that the degree of finish for subgrades shall be specified in paragraph SUBGRADE PREPARATION. Gutters and ditches shall be finished in a manner that will result in effective drainage. The surface of areas to be turfed shall be finished to a smoothness suitable for the application of turfing materials.

3.11 PLACING TOPSOIL

On areas to receive topsoil, the compacted subgrade soil shall be scarified to a 2 inch depth for bonding of topsoil with subsoil. Topsoil then shall be spread evenly to a thickness of 6 inches and graded to the elevations and slopes shown. Topsoil shall not be spread when frozen or excessively wet or dry. Material required for topsoil in excess of that produced by excavation within the grading limits shall be obtained from offsite areas.

3.12 TESTING

Testing shall be performed by an approved commercial testing laboratory or by the Contractor subject to approval. If the Contractor elects to establish testing facilities, no work requiring testing will be permitted until the Contractor's facilities have been inspected and approved by the Contracting Officer. Field in-place density shall be determined in accordance with ASTM D 1556, ASTM D 2937 or ASTM D 2922. When ASTM D 2922 is used, the calibration curves shall be checked and adjusted using only the sand cone method as described in ASTM D 1556. ASTM D 2922 results in a wet unit weight of soil and when using this method ASTM D 3017 shall be used to determine the moisture content of the soil. The calibration curves furnished with the moisture gauges shall also be checked along with density calibration checks as described in ASTM D 3017; the calibration checks of both the density and moisture gauges shall be made at the beginning of a job on each different type of material encountered and at intervals as directed by the Contracting Officer. ASTM D 2937, Drive Cylinder Method

shall be used only for soft, fine-grained, cohesive soils. When test results indicate, as determined by the Contracting Officer, that compaction is not as specified, the material shall be removed, replaced and recompacted to meet specification requirements. Tests on recompacted areas shall be performed to determine conformance with specification requirements. Inspections and test results shall be certified by a registered professional civil engineer. These certifications shall state that the tests and observations were performed by or under the direct supervision of the engineer and that the results are representative of the materials or conditions being certified by the tests. The following number of tests, if performed at the appropriate time, will be the minimum acceptable for each type operation.

3.12.1 Fill and Backfill Material Gradation

One test per 100 cubic yards stockpiled or in-place source material. Gradation of fill and backfill material shall be determined in accordance with ASTM C 136.

3.12.2 In-Place Densities

a. One test per 100 square yards, or fraction thereof, of each lift of fill or backfill areas compacted by other than hand-operated machines.

b. One test per 100 square yards, or fraction thereof, of each lift of embankment or backfill for roads.

3.12.3 Check Tests on In-Place Densities

If ASTM D 2922 is used, in-place densities shall be checked by ASTM D 1556 as follows:

a. One check test per lift for each 500 square yards, or fraction thereof, of each lift of fill or backfill compacted by other than hand-operated machines.

b. One check test per lift for each 500 square feet, of fill or backfill areas compacted by hand-operated machines.

c. One check test per lift for each 500 square yards, or fraction thereof, of embankment or backfill for roads.

3.12.4 Moisture Contents

In the stockpile, excavation, or borrow areas, a minimum of two tests per day per type of material or source of material being placed during stable weather conditions shall be performed. During unstable weather, tests shall be made as dictated by local conditions and approved by the Contracting Officer.

3.12.5 Optimum Moisture and Laboratory Maximum Density

Tests shall be made for each type material or source of material including borrow material to determine the optimum moisture and laboratory maximum density values. One representative test per 1000 cubic yards of fill and backfill, or when any change in material occurs which may affect the optimum moisture content or laboratory maximum density.

3.12.6 Tolerance Tests for Subgrades

Continuous checks on the degree of finish specified in paragraph SUBGRADE PREPARATION shall be made during construction of the subgrades.

3.13 SUBGRADE AND EMBANKMENT PROTECTION

During construction, embankments and excavations shall be kept shaped and drained. Ditches and drains along subgrade shall be maintained to drain effectively at all times. The finished subgrade shall not be disturbed by traffic or other operation and shall be protected and maintained by the Contractor in a satisfactory condition until ballast, subbase, base, or pavement is placed. The storage or stockpiling of materials on the finished subgrade will not be permitted. No subbase, base course, ballast, or pavement shall be laid until the subgrade has been checked and approved, and in no case shall subbase, base, surfacing, pavement, or ballast be placed on a muddy, spongy, or frozen subgrade.

-- End of Section --

SECTION 02315

EXCAVATION, FILLING AND BACKFILLING FOR BUILDINGS
08/98

PART 1 GENERAL

1.1 REFERENCES

The publications listed below form a part of this specification to the extent referenced. The publications are referred to in the text by basic designation only.

AMERICAN SOCIETY FOR TESTING AND MATERIALS (ASTM)

ASTM D 1556	(1990; R 1996el) Density and Unit Weight of Soil in Place by the Sand-Cone Method
ASTM D 1557	(1991; R 1998) Laboratory Compaction Characteristics of Soil Using Modified Effort (56,000 ft-lbf/cu. ft. (2,700 kN-m/cu.m.))
ASTM D 2167	(1994) Density and Unit Weight of Soil in Place by the Rubber Balloon Method
ASTM D 2216	(1998) Laboratory Determination of Water (Moisture) Content of Soil and Rock
ASTM D 2487	(1998) Classification of Soils for Engineering Purposes (Unified Soil Classification System)
ASTM D 2922	(1996el) Density of Soil and Soil-Aggregate in Place by Nuclear Methods (Shallow Depth)
ASTM D 2937	(1994) Density of Soil in Place by the Drive-Cylinder Method
ASTM D 3017	(1988; R 1996el) Water Content of Soil and Rock in Place by Nuclear Methods (Shallow Depth)
ASTM D 4318	(1998) Liquid Limit, Plastic Limit, and Plasticity Index of Soils

1.2 DEGREE OF COMPACTION

Degree of compaction is expressed as a percentage of the maximum density obtained by the test procedure presented in ASTM D 1557, abbreviated as percent laboratory maximum density.

1.3 SUBMITTALS

Government approval is required for submittals with a "G" designation;

submittals not having a "G" designation are for information only. When used, a designation following the "G" designation identifies the office that will review the submittal for the Government. The following shall be submitted in accordance with Section 01330 SUBMITTAL PROCEDURES:

SD-06 Test Reports

Testing; G

Copies of all laboratory and field test reports within 24 hours of the completion of the test.

PART 2 PRODUCTS

2.1 MATERIALS

2.1.1 Satisfactory Materials

Satisfactory materials shall comprise any materials classified by ASTM D 2487 as GW, GP, GM, GP-GM, GW-GM, GC, GP-GC, GM-GC, SW, SP, SM, SW-SM, SC, SW-SC, SP-SM, SP-SC, CL.

2.1.2 Unsatisfactory Materials

Materials which do not comply with the requirements for satisfactory materials are unsatisfactory. Unsatisfactory materials also include man-made fills, trash, refuse, or backfills from previous construction. Unsatisfactory material also includes material classified as satisfactory which contains root and other organic matter, frozen material, and stones larger than 3 inches in any dimension. The Contracting Officer shall be notified of any contaminated materials.

2.1.3 Cohesionless and Cohesive Materials

Cohesionless materials include materials classified in ASTM D 2487 as GW, GP, SW, and SP. Cohesive materials include materials classified as GC, SC, ML, CL, MH, and CH. Materials classified as GM, GP-GM, GW-GM, SW-SM, SP-SM, and SM shall be identified as cohesionless only when the fines are nonplastic.

2.1.4 Expansive Soils

Expansive soils are defined as soils that have a plasticity index equal to or greater than 25 when tested in accordance with ASTM D 4318.

2.1.5 Nonfrost Susceptible (NFS) Material

Nonfrost susceptible material shall be a uniformly graded washed sand with a maximum particle size of 1/4 inch and less than 5 percent passing the No. 200 size sieve, and with not more than 3 percent by weight finer than 0.02 mm grain size.

2.2 CAPILLARY WATER BARRIER

Capillary Water Barrier shall consist of clean, crushed, nonporous rock, crushed gravel, or uncrushed gravel. The maximum particle size shall be 1-1/2 inches and no more than 2 percent by weight shall pass the No. 4 size sieve.

PART 3 EXECUTION

3.1 CLEARING AND GRUBBING

Clearing and grubbing is specified in Section 02230 CLEARING AND GRUBBING.

3.2 TOPSOIL

Topsoil shall be stripped to a depth of 6 inches below existing grade within the designated excavations and grading lines and deposited in storage piles for later use. Excess topsoil shall be disposed as specified for excess excavated material.

3.3 EXCAVATION

Excavation shall conform to the dimensions and elevations indicated for each building, structure, and footing except as specified, and shall include trenching for utility and foundation drainage systems to a point 5 feet beyond the building line of each building and structure, excavation for outside grease interceptors and all work incidental thereof. Excavation shall extend a sufficient distance from walls and footings to allow for placing and removal of forms. Excavations below indicated depths will not be permitted except to remove unsatisfactory material. Unsatisfactory material encountered below the grades shown shall be removed as directed and replaced with satisfactory material; and payment will be made in conformance with the CHANGES clause of the CONTRACT CLAUSES. Satisfactory material removed below the depths indicated, without specific direction of the Contracting Officer, shall be replaced, at no additional cost to the Government, with satisfactory materials to the indicated excavation grade; except that concrete footings shall be increased in thickness to the bottom of the overdepth excavations and over-break in rock excavation. Satisfactory material shall be placed and compacted as specified in paragraph FILLING AND BACKFILLING. Determination of elevations and measurements of approved overdepth excavation of unsatisfactory material below grades indicated shall be done under the direction of the Contracting Officer.

3.4 DRAINAGE AND DEWATERING

3.4.1 Drainage

Surface water shall be directed away from excavation and construction sites to prevent erosion and undermining of foundations. Diversion ditches, dikes and grading shall be provided and maintained as necessary during construction. Excavated slopes and backfill surfaces shall be protected to prevent erosion and sloughing. Excavation shall be performed so that the site, the area immediately surrounding the site, and the area affecting operations at the site shall be continually and effectively drained.

3.4.2 Dewatering

Groundwater flowing toward or into excavations shall be controlled to prevent sloughing of excavation slopes and walls, boils, uplift and heave in the excavation and to eliminate interference with orderly progress of construction. French drains, sumps, ditches or trenches will not be permitted within 3 feet of the foundation of any structure, except with specific written approval, and after specific contractual provisions for restoration of the foundation area have been made. Control measures shall be taken by the time the excavation reaches the water level in order to

maintain the integrity of the in situ material. While the excavation is open, the water level shall be maintained continuously, at least 2 feet below the working level. Depending on climatological effects and the time of year LAFB has a high ground water table and dewatering of utility trenches and other excavations may be required. Geotechnical data is included in the appendix to the specifications. Contractor shall anticipate significant dewatering at the site.

3.5 SHORING

Shoring, including sheet piling, shall be furnished and installed as necessary to protect workmen, banks, adjacent paving, structures, and utilities. Shoring, bracing, and sheeting shall be removed as excavations are backfilled, in a manner to prevent caving.

3.6 CLASSIFICATION OF EXCAVATION

Excavation will be unclassified regardless of the nature of material encountered.

3.7 BLASTING

Blasting will not be permitted.

3.8 UTILITY AND DRAIN TRENCHES

Trenches for underground utilities systems and drain lines shall be excavated to the required alignments and depths. The bottoms of trenches shall be graded to secure the required slope and shall be tamped if necessary to provide a firm pipe bed. Recesses shall be excavated to accommodate bells and joints so that pipe will be uniformly supported for the entire length.

3.9 BORROW

Where satisfactory materials are not available in sufficient quantity from required excavations, approved materials shall be obtained as specified in Section 02300 EARTHWORK.

3.10 EXCAVATED MATERIALS

Satisfactory excavated material required for fill or backfill shall be placed in the proper section of the permanent work required under this section or shall be separately stockpiled if it cannot be readily placed. Satisfactory material in excess of that required for the permanent work and all unsatisfactory material shall be disposed of as specified in Section 02300 EARTHWORK.

3.11 FINAL GRADE OF SURFACES TO SUPPORT CONCRETE

Excavation to final grade shall not be made until just before concrete is to be placed. For pile foundations, the excavation shall be stopped at an elevation of from 6 to 12 inches above the bottom of the footing before driving piles. After pile driving has been completed, the remainder of the excavation shall be completed to the elevations shown. Only excavation methods that will leave the foundation rock in a solid and unshattered condition shall be used. Approximately level surfaces shall be roughened, and sloped surfaces shall be cut as indicated into rough steps or benches to provide a satisfactory bond. Shales shall be protected from slaking and

all surfaces shall be protected from erosion resulting from ponding or flow of water.

3.12 SUBGRADE PREPARATION

Unsatisfactory material in surfaces to receive fill or in excavated areas shall be removed and replaced with satisfactory materials as directed by the Contracting Officer. The surface shall be scarified to a depth of 6 inches before the fill is started. Sloped surfaces steeper than 1 vertical to 4 horizontal shall be plowed, stepped, benched, or broken up so that the fill material will bond with the existing material. When subgrades are less than the specified density, the ground surface shall be broken up to a minimum depth of 6 inches, pulverized, and compacted to the specified density. When the subgrade is part fill and part excavation or natural ground, the excavated or natural ground portion shall be scarified to a depth of 12 inches and compacted as specified for the adjacent fill. Material shall not be placed on surfaces that are muddy, frozen, or contain frost. Compaction shall be accomplished by sheepsfoot rollers, pneumatic-tired rollers, steel-wheeled rollers, or other approved equipment well suited to the soil being compacted. Material shall be moistened or aerated as necessary to provide the moisture content that will readily facilitate obtaining the specified compaction with the equipment used. Minimum subgrade density shall be as specified in paragraph FILLING AND BACKFILLING.

3.13 FILLING AND BACKFILLING

Satisfactory materials shall be used in bringing fills and backfills to the lines and grades indicated and for replacing unsatisfactory materials. Satisfactory materials shall be placed in horizontal layers not exceeding 8 inches in loose thickness, or 6 inches when hand-operated compactors are used. After placing, each layer shall be plowed, disked, or otherwise broken up, moistened or aerated as necessary, thoroughly mixed and compacted as specified. Backfilling shall not begin until construction below finish grade has been approved, underground utilities systems have been inspected, tested and approved, forms removed, and the excavation cleaned of trash and debris. Backfill shall be brought to indicated finish grade and shall include backfill for outside grease interceptors and underground fuel tanks. Backfill shall not be placed in wet or frozen areas. Where pipe is coated or wrapped for protection against corrosion, the backfill material up to an elevation 2 feet above sewer lines and 1 foot above other utility lines shall be free from stones larger than 1 inch in any dimension. Heavy equipment for spreading and compacting backfill shall not be operated closer to foundation or retaining walls than a distance equal to the height of backfill above the top of footing; the area remaining shall be compacted in layers not more than 4 inches in compacted thickness with power-driven hand tampers suitable for the material being compacted. Backfill shall be placed carefully around pipes or tanks to avoid damage to coatings, wrappings, or tanks. Backfill shall not be placed against foundation walls prior to 7 days after completion of the walls. As far as practicable, backfill shall be brought up evenly on each side of the wall and sloped to drain away from the wall. Each layer of fill and backfill shall be compacted to not less than the percentage of maximum density specified below:

	Percent Laboratory maximum density	
	Cohesive material	Cohesionless material
Fill, embankment, and backfill		
Under structures, building slabs, steps, paved areas, around footings, and in trenches	90	95
Under sidewalks and grassed areas	85	90
Nonfrost susceptible materials		95
Subgrade		
Under building slabs, steps, and paved areas, top 12 inches	95	98
Under sidewalks, top 6 inches	90	95

Approved compacted subgrades that are disturbed by the Contractor's operations or adverse weather shall be scarified and compacted as specified herein before to the required density prior to further construction thereon. Recompaction over underground utilities and heating lines shall be by hand tamping.

3.14 TESTING

Testing shall be the responsibility of the Contractor and shall be performed at no additional cost to the Government. Testing shall be performed by an approved commercial testing laboratory or may be performed by the Contractor subject to approval. Field in-place density shall be determined in accordance with ASTM D 1556, ASTM D 2167, or ASTM D 2922. When ASTM D 2922 is used, the calibration curves shall be checked and adjusted if necessary by the procedure described in ASTM D 2922, paragraph ADJUSTING CALIBRATION CURVE. ASTM D 2922 results in a wet unit weight of soil and when using this method ASTM D 3017 shall be used to determine the moisture content of the soil. The calibration curves furnished with the moisture gauges shall also be checked along with density calibration checks as described in ASTM D 3017. The calibration checks of both the density and moisture gauges shall be made at the beginning of a job on each different type of material encountered and at intervals as directed by the Contracting Officer. ASTM D 2937 shall be used only for soft, fine-grained, cohesive soils. The following number of tests, if performed at the appropriate time, shall be the minimum acceptable for each type operation.

3.14.1 In-Place Densities

In-place density and moisture content test results shall be included with the Contractor's daily construction quality control reports.

3.14.1.1 In-Place Density of Subgrades

One test per 100 square yards or fraction thereof.

3.14.1.2 In-Place Density of Fills and Backfills

One test per 100 square yards or fraction thereof of each lift for fill or backfill areas compacted by other than hand or hand-operated machines. The density for each lift of fill or backfill materials for trenches, pits, building perimeters or other structures or areas less than 40 feet in width, which are compacted with hand or hand-operated machines shall be tested as follows: One test per each area less than 100 square yards, or one test for each 65 linear foot of long narrow fills 200 feet or more in length. If ASTM D 2922 is used, in-place densities shall be checked by ASTM D 1556 as follows: One check per lift for each 100 linear feet of long narrow fills, and a minimum of 10 checks per lift for other fill and backfill areas.

3.14.2 Moisture Content

In the stockpile, excavation or borrow areas, a minimum of two tests per day per type of material or source of materials being placed is required during stable weather conditions. During unstable weather, tests shall be made as dictated by local conditions and approved moisture content shall be tested in accordance with ASTM D 2216.

3.14.3 Optimum Moisture and Laboratory Maximum Density

Tests shall be made for each type material or source of material, including borrow material to determine the optimum moisture and laboratory maximum density values. One representative test per 1500 cubic yards of fill and backfill, or when any change in material occurs which may affect the optimum moisture content or laboratory maximum density will be made.

3.15 CAPILLARY WATER BARRIER

Capillary water barrier under concrete floor and area-way slabs on grade shall be placed directly on the subgrade and shall be compacted with a minimum of two passes of a hand-operated plate-type vibratory compactor.

3.16 GRADING

Areas within 5 feet outside of each building and structure line shall be constructed true-to-grade, shaped to drain, and shall be maintained free of trash and debris until final inspection has been completed and the work has been accepted.

3.17 SPREADING TOPSOIL

Areas outside the building lines from which topsoil has been removed shall be topsoiled. The surface shall be free of materials that would hinder planting or maintenance operations. The subgrade shall be pulverized to a depth of 2 inches by disking or plowing for the bonding of topsoil with the subsoil. Topsoil shall then be uniformly spread, graded, and compacted to the thickness, elevations, slopes shown, and left free of surface irregularities. Topsoil shall be compacted by one pass of a cultipacker, roller, or other approved equipment weighing 100 to 160 pounds per linear foot of roller. Topsoil shall not be placed when the subgrade is frozen,

excessively wet, extremely dry, or in a condition otherwise detrimental to seeding, planting, or proper grading.

3.18 PROTECTION

Settlement or washing that occurs in graded, topsoiled, or backfilled areas prior to acceptance of the work, shall be repaired and grades reestablished to the required elevations and slopes.

-- End of Section --

SECTION 02316

EXCAVATION, TRENCHING, AND BACKFILLING FOR UTILITIES SYSTEMS
11/97

PART 1 GENERAL

1.1 REFERENCES

The publications listed below form a part of this specification to the extent referenced. The publications are referred to in the text by basic designation only.

AMERICAN SOCIETY FOR TESTING AND MATERIALS (ASTM)

ASTM D 1556	(1990; R 1996) Density and Unit Weight of Soil in Place by the Sand-Cone Method
ASTM D 1557	(1998) Laboratory Compaction Characteristics of Soil Using Modified Effort (56,000 ft-lbf/cu. ft. (2,700 kN-m/cu. m.))
ASTM D 2487	(1998) Classification of Soils for Engineering Purposes (Unified Soil Classification System)
ASTM D 2922	(1996) Density of Soil and Soil-Aggregate in Place by Nuclear Methods (Shallow Depth)
ASTM D 2937	(2000) Standard Test Method for Density of Soil in Place by the Drive-Cylinder Method
ASTM D 3017	(1988; R1996el) Water Content of Soil and Rock in Place by Nuclear Methods (Shallow Depth)

U.S ARMY CORPS OF ENGINEERS (USACE)

EM 385-1-1	(1996) Safety and Health Requirements

1.2 DEGREE OF COMPACTION

Degree of compaction shall be expressed as a percentage of the maximum density obtained by the test procedure presented in ASTM D 1557.

1.3 SUBMITTALS

Government approval is required for submittals with a "G" designation; submittals not having a "G" designation are for information only. When used, a designation following the "G" designation identifies the office that will review the submittal for the Government. The following shall be submitted in accordance with Section 01330 SUBMITTAL PROCEDURES:

SD-06 Test Reports

Field Density Tests; G
Testing of Backfill Materials; G

Copies of all laboratory and field test reports within 24 hours of the completion of the test.

PART 2 PRODUCTS

2.1 MATERIALS

2.1.1 Satisfactory Materials

Satisfactory materials shall comprise any materials classified by ASTM D 2487 as GW, GP, GM, GP-GM, GW-GM, GC, GP-GC, GM-GC, SW, SP, SM, SW-SM, SC, SW-SC, SP-SM, SP-SC, CL.

2.1.2 Unsatisfactory Materials

Materials which do not comply with the requirements for satisfactory materials are unsatisfactory. Unsatisfactory materials also include man-made fills, trash, refuse, or backfills from previous construction. Unsatisfactory material also includes material classified as satisfactory which contains root and other organic matter, frozen material, and stones larger than 3 inches in any dimension. The Contracting Officer shall be notified of any contaminated materials.

2.1.3 Cohesionless and Cohesive Materials

Cohesionless materials shall include materials classified in ASTM D 2487 as GW, GP, SW, and SP. Cohesive materials shall include materials classified as GC, SC, ML, CL, MH, and CH. Materials classified as GM and SM shall be identified as cohesionless only when the fines are nonplastic.

2.1.4 Rock

Rock shall consist of boulders measuring 1/2 cubic yard or more and materials that cannot be removed without systematic drilling and blasting such as rock material in ledges, bedded deposits, unstratified masses and conglomerate deposits, and below ground concrete or masonry structures, exceeding 1/2 cubic yard in volume, except that pavements shall not be considered as rock.

2.1.5 Unyielding Material

Unyielding material shall consist of rock and gravelly soils with stones greater than 3 inches in any dimension or as defined by the pipe manufacturer, whichever is smaller.

2.1.6 Unstable Material

Unstable material shall consist of materials too wet to properly support the utility pipe, conduit, or appurtenant structure.

2.1.7 Select Granular Material

Select granular material shall consist of well-graded sand, gravel, crushed gravel, crushed stone or crushed slag composed of hard, tough and durable particles, and shall contain not more than 10 percent by weight of material

passing a No. 200 mesh sieve and no less than 95 percent by weight passing the l inch sieve. The maximum allowable aggregate size shall be 3 inches, or the maximum size recommended by the pipe manufacturer, whichever is smaller.

2.1.8 Initial Backfill Material

Initial backfill shall consist of select granular material.

2.2 PLASTIC MARKING TAPE

Plastic marking tape shall be acid and alkali-resistant polyethylene film, 6 inches wide with minimum thickness of 0.004 inch. Tape shall have a minimum strength of 1750 psi lengthwise and 1500 psi crosswise. The tape shall be manufactured with integral wires, foil backing or other means to enable detection by a metal detector when the tape is buried up to 3 feet deep. The tape shall be of a type specifically manufactured for marking and locating underground utilities. The metallic core of the tape shall be encased in a protective jacket or provided with other means to protect it from corrosion. Tape color shall be as specified in TABLE 1 and shall bear a continuous printed inscription describing the specific utility.

TABLE 1. Tape Color

Red:	Electric
Yellow:	Gas, Oil, Dangerous Materials
Orange:	Telephone, Telegraph, Television, Police, and Fire Communications
Blue:	Water Systems
Green:	Sewer Systems

PART 3 EXECUTION

3.1 EXCAVATION

Utility installation across Juniper Avenue or Hickory Road may be open cut, jacked or bored. If open cut, the road may not be closed for more than 5 working days consecutively. Coordinate road closure with Contracting Officer and Base Civil Engineering Office. Contractor is required to submit a traffic safety and signage plan at least seven days prior to a planned closure. Plan must include procedures for fire/emergency vehicle access.

Excavation shall be performed to the lines and grades indicated. Earth excavation shall include removal and disposal of all material. During excavation, material satisfactory for backfilling shall be stockpiled in an orderly manner at a distance from the banks of the trench equal to 1/2 the depth of the excavation, but in no instance closer than 2 feet. Excavated material not required or not satisfactory for backfill shall be removed from the site. Grading shall be done as may be necessary to prevent surface water from flowing into the excavation, and any water accumulating shall be removed to maintain the stability of the bottom and sides of the excavation. Unauthorized overexcavation shall be backfilled in accordance with paragraph BACKFILLING AND COMPACTION at no additional cost to the Government.

3.1.1 Dewatering

Groundwater flowing toward or into excavations shall be controlled to

prevent sloughing of excavation slopes and walls, boils, uplift and heave in the excavation and to eliminate interference with orderly progress of construction. French drains, sumps, ditches or trenches will not be permitted within 36 inches of the foundation of any structure, except with specific written approval, and after specific contractual provisions for restoration of the foundation area have been made. Control measures shall be taken by the time the excavation reaches the water level in order to maintain the integrity of the in situ material. While the excavation is open, the water level shall be maintained continuously, at least 2 feet below the working level. Contractor to refer to Appendix of the specifications for soil boring logs. Contractor shall anticipate significant dewatering at the site. Due to climatological effects and the time of year LAFB has a high groundwater table and dewatering of utility trenches and other excavations may be required.

3.1.2 Trench Excavation Requirements

The trench shall be excavated in accordance with the safety criteria of EM 385-1-1 and as recommended by the manufacturer of the pipe to be installed. Trench walls below the top of the pipe shall be sloped, or made vertical, and of such width as recommended in the manufacturer's installation manual. No more than 500 feet of trench shall be open at any given time. Where no manufacturer's installation manual is available, trench walls shall be made vertical. Trench walls more than 3 feet high shall be shored, cut back to a stable slope, or provided with equivalent means of protection for employees who may be exposed to moving ground or cave in. Vertical trench walls more than 3 feet high shall be shored. Trench walls which are cut back shall be excavated to at least the angle of repose of the soil. Special attention shall be given to slopes which may be adversely affected by weather or moisture content. The trench width below the top of pipe shall not exceed 24 inches plus pipe outside diameter (O.D.) for pipes of less than 24 inches inside diameter and shall not exceed 36 inches plus pipe outside diameter for sizes larger than 24 inches inside diameter. Where recommended trench widths are exceeded, redesign, stronger pipe, or special installation procedures shall be utilized by the Contractor. The cost of redesign, stronger pipe, or special installation procedures shall be borne by the Contractor without any additional cost to the Government.

3.1.2.1 Bottom Preparation

The bottoms of trenches shall be accurately graded to provide uniform bearing and support for the bottom quadrant of each section of the pipe. Bell holes shall be excavated to the necessary size at each joint or coupling to eliminate point bearing. Stones of 3 inches or greater in any dimension, or as recommended by the pipe manufacturer, whichever is smaller, shall be removed to avoid point bearing.

3.1.2.2 Removal of Unyielding Material

Where unyielding material is encountered in the bottom of the trench, such material shall be removed 4 inches below the required grade and replaced with suitable materials as provided in paragraph BACKFILLING AND COMPACTION.

3.1.2.3 Removal of Unstable Material

Where unstable material is encountered in the bottom of the trench, such material shall be removed to the depth directed and replaced to the proper grade with select granular material as provided in paragraph BACKFILLING AND COMPACTION. When removal of unstable material is required due to the

Contractor's fault or neglect in performing the work, the resulting material shall be excavated and replaced by the Contractor without additional cost to the Government.

3.1.2.4 Excavation for Appurtenances

Excavation for manholes, catch-basins, inlets, or similar structures shall be of sufficient size to permit the placement and removal of forms for the full length and width of structure footings and foundations as shown. Rock shall be cleaned of loose debris and cut to a firm surface either level, stepped, or serrated, as shown or as directed. Loose disintegrated rock and thin strata shall be removed. Removal of unstable material shall be as specified above. When concrete or masonry is to be placed in an excavated area, special care shall be taken not to disturb the bottom of the excavation. Excavation to the final grade level shall not be made until just before the concrete or masonry is to be placed.

3.1.2.5 Jacking, Boring, and Tunneling

Unless otherwise indicated, excavation shall be by open cut except that sections of a trench may be jacked, bored, or tunneled if, in the opinion of the Contracting Officer, the pipe, cable, or duct can be safely and properly installed and backfill can be properly compacted in such sections.

Coordinate road closure with Contracting Officer and Base Civil Engineering Office. Contractor is required to submit a traffic safety and signage plan at least seven days prior to a planned closure. Plan must include procedures for fire/emergency vehicle access.

3.1.3 Stockpiles

Stockpiles of satisfactory and unsatisfactory material shall be placed and graded as specified. Stockpiles shall be kept in a neat and well drained condition, giving due consideration to drainage at all times. The ground surface at stockpile locations shall be cleared, grubbed, and sealed by rubber-tired equipment, excavated satisfactory and unsatisfactory materials shall be separately stockpiled. Stockpiles of satisfactory materials shall be protected from contamination which may destroy the quality and fitness of the stockpiled material. If the Contractor fails to protect the stockpiles, and any material becomes unsatisfactory, such material shall be removed and replaced with satisfactory material from approved sources at no additional cost to the Government. Locations of stockpiles of satisfactory materials shall be subject to prior approval of the Contracting Officer.

3.2 BACKFILLING AND COMPACTION

Backfill material shall consist of satisfactory material, select granular material, or initial backfill material as required. Backfill shall be placed in layers not exceeding 6 inches loose thickness for compaction by hand operated machine compactors, and 8 inches loose thickness for other than hand operated machines, unless otherwise specified. Each layer shall be compacted to at least 95 percent maximum density for cohesionless soils and 90 percent maximum density for cohesive soils, except in the final 12 inches beneath pavements and floor slabs where this requirement will be increased to 98 percent laboratory maximum dry density for all soils. It shall be compacted within 2 percent of the optimum moisture content.

3.2.1 Trench Backfill

Trenches shall be backfilled to the grade shown. The trench shall not be backfilled until all specified tests are performed.

3.2.1.1 Replacement of Unyielding Material

Unyielding material removed from the bottom of the trench shall be replaced with select granular material or initial backfill material.

3.2.1.2 Replacement of Unstable Material

Unstable material removed from the bottom of the trench or excavation shall be replaced with select granular material placed in layers not exceeding 6 inches loose thickness.

3.2.1.3 Bedding and Initial Backfill

Initial backfill material shall be placed and compacted with approved tampers to a height of at least one foot above the utility pipe or conduit. The backfill shall be brought up evenly on both sides of the pipe for the full length of the pipe. Care shall be taken to ensure thorough compaction of the fill under the haunches of the pipe.

3.2.1.4 Cut-Off Walls

To control the flow of potentially contaminated groundwater within the utility trenches the Contractor shall construct cut-off walls as indicated on the drawings and details. Cut-off walls shall be constructed of clay compacted to 95% of maximum dry density at optimum moisture content as determined by ASTM D 1557.

3.2.1.5 Final Backfill

The remainder of the trench, except for special materials for roadways, shall be filled with satisfactory material. Backfill material shall be placed and compacted as follows:

a. Roadways: Backfill shall be placed up to the elevation at which the requirements in Section 02300 EARTHWORK control. Water flooding or jetting methods of compaction will not be permitted.

b. Sidewalks, Turfed or Seeded Areas and Miscellaneous Areas: Backfill shall be deposited in layers of a maximum of 12 inch loose thickness, and compacted to 85 percent maximum density for cohesive soils and 90 percent maximum density for cohesionless soils. Compaction by water flooding or jetting will not be permitted. This requirement shall also apply to all other areas not specifically designated above.

3.2.2 Backfill for Appurtenances

After the manhole, catch basin, inlet, or similar structure has been constructed, backfill shall be placed in such a manner that the structure will not be damaged by the shock of falling earth. The backfill material shall be deposited and compacted as specified for final backfill, and shall be brought up evenly on all sides of the structure to prevent eccentric loading and excessive stress.

3.3 SPECIAL REQUIREMENTS

Special requirements for both excavation and backfill relating to the specific utilities are as follows:

3.3.1 Gas Distribution

All gas line installation, removal, etc., up to and including the building meter shall be completed by Virginia Natural Gas. Contractor to pay all fees and connection charges in regard to new gas service, including meter, connection, and other associated fees for gas service. Coordinate with Virginia Natural Gas and Contracting Officer.

3.3.2 Water Lines

Trenches shall be of a depth to provide a minimum cover of 3.0 feet from the existing ground surface, or from the indicated finished grade, whichever is lower, to the top of the pipe. For fire protection yard mains or piping, an additional 6 inches of cover is required. Water lines shall be separated by a minimum of 18 inches vertically and 10 feet horizontally from sewer mains.

3.3.3 Heat Distribution System

Initial backfill material shall be free of stones larger than 1/4 inch in any dimension.

3.3.4 Electrical Distribution System

Direct burial cable and conduit or duct line shall have a minimum cover of 24 inches from the finished grade, unless otherwise indicated. Special trenching requirements for direct-burial electrical cables and conduits are specified in Section 16375 ELECTRICAL DISTRIBUTION SYSTEM, UNDERGROUND.

3.3.5 Plastic Marking Tape

Warning tapes shall be installed directly above the pipe, at a depth of 18 inches below finished grade unless otherwise shown.

3.4 TESTING

Testing shall be the responsibility of the Contractor and shall be performed at no additional cost to the Government.

3.4.1 Testing Facilities

Tests shall be performed by an approved commercial testing laboratory or may be tested by facilities furnished by the Contractor. No work requiring testing will be permitted until the facilities have been inspected and approved by the Contracting Officer.

3.4.2 Testing of Backfill Materials

Classification of backfill materials shall be determined in accordance with ASTM D 2487 and the moisture-density relations of soils shall be determined in accordance with ASTM D 1557. A minimum of one soil classification and one moisture-density relation test shall be performed on each different type of material used for bedding and backfill.

3.4.3 Field Density Tests

Tests shall be performed in sufficient numbers to ensure that the specified density is being obtained. A minimum of one field density test per lift of backfill for every 100 feet of installation shall be performed. One moisture density relationship shall be determined for every 1500 cubic yards of material used. Field in-place density shall be determined in accordance with ASTM D 1556, ASTM D 2937, or ASTM D 2922. When ASTM D 2922 is used, the calibration curves shall be checked and adjusted using the sand cone method as described in paragraph Calibration of the ASTM publication. ASTM D 2922 results in a wet unit weight of soil and when using this method, ASTM D 3017 shall be used to determine the moisture content of the soil. The calibration curves furnished with the moisture gauges shall be checked along with density calibration checks as described in ASTM D 3017. The calibration checks of both the density and moisture gauges shall be made at the beginning of a job, on each different type of material encountered, at intervals as directed by the Contracting Officer. Copies of calibration curves, results of calibration tests, and field and laboratory density tests shall be furnished to the Contracting Officer. Trenches improperly compacted shall be reopened to the depth directed, then refilled and compacted to the density specified at no additional cost to the Government.

3.4.4 Displacement of Sewers

After other required tests have been performed and the trench backfill compacted to the finished grade surface, the pipe shall be inspected to determine whether significant displacement has occurred. This inspection shall be conducted in the presence of the Contracting Officer. Pipe sizes larger than 36 inches shall be entered and examined, while smaller diameter pipe shall be inspected by shining a light or laser between manholes or manhole locations, or by the use of television cameras passed through the pipe. If, in the judgement of the Contracting Officer, the interior of the pipe shows poor alignment or any other defects that would cause improper functioning of the system, the defects shall be remedied as directed at no additional cost to the Government.

-- End of Section --

SECTION 02364

TERMITICIDE TREATMENT MEASURES FOR SUBTERRANEAN TERMITE CONTROL
06/98

PART 1 GENERAL

1.1 SUBMITTALS

Government approval is required for submittals with a "G" designation; submittals not having a "G" designation are for information only. When used, a designation following the "G" designation identifies the office that will review the submittal for the Government. The following shall be submitted in accordance with Section 01330 SUBMITTAL PROCEDURES:

SD-03 Product Data

Termiticide Treatment; G

A Termiticide application plan with proposed sequence of treatment work with dates and times. The termiticide trade name, EPA registration number, chemical composition, formulation, concentration of original and diluted material, application rate of active ingredients, method of application, area/volume treated, amount applied; and the name and state license number of the state certified applicator shall be included.

Termiticides; G

Manufacturer's label and Material Safety Data Sheet (MSDS) for termiticides proposed for use.

Foundation Exterior

Written verification that other site work will not disturb the treatment.

Utilities and Vents

Written verification that utilities, vents have been located.

Crawl and Plenum Air Spaces

Written verification that crawl spaces and plenum air spaces have been located.

Verification of Measurement

Written verification that the volume of termiticide used meets the application rate.

Application Equipment

A listing of equipment to be used.

SD-04 Samples

Termiticides

Termiticide samples obtained during application, upon request.

SD-06 Test Reports

Equipment Calibration and Tank Measurement

Certification of calibration tests conducted on the equipment used in the termiticide application.

Soil Moisture

Soil moisture test result.

SD-07 Certificates

Qualifications; G

Qualifications and state license number of the termiticide applicator.

1.2 QUALIFICATIONS

The Contractor's principal business shall be pest control. The Contractor shall be licensed and the termiticide applicators certified in the state where the work is to be performed. Termiticide applicators shall also be certified in the U.S. Environmental Protection Agency (EPA) pesticide applicator category which includes structural pest control.

1.3 SAFETY REQUIREMENTS

The Contractor shall formulate, treat, and dispose of termiticides and their containers in accordance with label directions. Use the clothing and personal protective equipment specified on the labeling for use during all phases of the application.

1.4 DELIVERY, STORAGE, AND HANDLING

1.4.1 Delivery

Termiticide material shall be delivered to the site in the original unopened containers bearing legible labels indicating the EPA registration number and manufacturer's registered uses. All other materials to be used on site for the purpose of termite control shall be delivered in new or otherwise good condition as supplied by the manufacturer or formulator.

1.4.2 Storage

Materials shall be stored in designated areas and in accordance with manufacturer's labels. Termiticides and related materials shall be kept under lock and key when unattended.

1.4.3 Handling

Termiticides shall be handled in accordance with manufacturer's labels. Manufacturer's warnings and precautions shall be observed. Materials shall be handled preventing contamination by dirt, water, and organic material.

Protect termiticides from sunlight as recommended by the manufacturer.

1.5 INSPECTION

Termiticides shall be inspected upon arrival at the job site for conformity to type and quality in accordance with paragraph TERMITICIDE. Each label shall bear evidence of registration under the Federal Insecticide, Fungicide, and Rodenticide Act (FIFRA), as amended. Other materials shall be inspected for conformance with specified requirements. Unacceptable materials shall be removed from the job site.

1.6 WARRANTY

The Contractor shall provide a year written warranty against infestations or reinfestations by subterranean termites of the buildings or building additions constructed under this contract. Warranty shall include annual inspections of the buildings or building additions.

PART 2 PRODUCTS

2.1 TERMITICIDES

Termiticides shall be currently registered by the EPA. Termiticide shall be selected for maximum effectiveness and duration after application. The selected termiticide shall be suitable for the soil and climatic conditions at the project site.

PART 3 EXECUTION

3.1 TECHNICAL REPRESENTATIVE

The certified installation pest management coordinator shall be the technical representative, and shall be present at all meetings concerning treatment measures for subterranean termites. They may be present during treatment application.

3.2 SITE PREPARATION

Site preparation shall be in accordance with Sections 02230 CLEARING AND GRUBBING, 02300 EARTHWORK, 02315 EXCAVATION, FILLING AND BACKFILLING FOR BUILDINGS, 02922 SODDING. Work related to final grades, landscape plantings, foundations, or any other alterations to finished construction which might alter the condition of treated soils, shall be coordinated with this specification.

3.2.1 Ground Preparation

Food sources shall be eliminated by removing debris from clearing and grubbing and post construction wood scraps such as ground stakes, form boards, and scrap lumber from the site, before termiticide application begins.

3.2.2 Verification

Before work starts, the Contractor shall verify that final grades are as indicated and smooth grading has been completed in accordance with Section 02300 EARTHWORK. Soil particles shall be finely graded with particles no larger than 1 inch and compacted to eliminate soil movement to the greatest degree.

3.2.3 Foundation Exterior

The Contractor shall provide written verification that final grading and landscape planting operations will not disturb treatment of the soil on the exterior sides of foundation walls, grade beams, and similar structures.

3.2.4 Utilities and Vents

The Contractor shall provide written verification that the location and identity of HVAC ducts and vents, water and sewer lines, and plumbing have been accomplished prior to the termiticide application.

3.2.5 Crawl and Plenum Air Spaces

The Contractor shall provide written verification that the location and identity of crawl and plenum air spaces have been accomplished prior to the termiticide application.

3.3 SITE CONDITIONS

The following conditions shall determine the time of application.

3.3.1 Soil Moisture

Soils to be treated shall be tested immediately before application. Soil moisture content shall be tested to a minimum depth of 3 inches. The soil moisture shall be as recommended by the termiticide manufacturer. The termiticide will not be applied when soil moisture exceeds manufacturer's recommendations because termiticides do not adhere to the soil particles in saturated soils.

3.3.2 Runoff and Wind Drift

Termiticide shall not be applied during or immediately following heavy rains. Applications shall not be performed when conditions may cause runoff or create an environmental hazard. Applications shall not be performed when average wind speed exceeds 10 miles per hour. The termiticide shall not be allowed to enter water systems, aquifers, or endanger humans or animals.

3.3.2.1 Vapor Barriers and Waterproof Membranes

Termiticide shall be applied prior to placement of a vapor barrier or waterproof membrane.

3.3.2.2 Utilities and Vents

Prior to application, HVAC ducts and vents located in treatment area shall be turned off and blocked to protect people and animals from termiticide.

3.3.3 Placement of Concrete

Concrete covering treated soils shall be placed as soon as the termiticide has reached maximum penetration into the soil. Time for maximum penetration shall be as recommended by the manufacturer.

3.4 TERMITICIDE TREATMENT

3.4.1 Equipment Calibration and Tank Measurement

Immediately prior to commencement of termiticide application, calibration tests shall be conducted on the application equipment to be used and the application tank shall be measured to determine the volume and contents. These tests shall confirm that the application equipment is operating within the manufacturer's specifications and will meet the specified requirements. The Contractor shall provide written certification of the equipment calibration test results within 1 week of testing.

3.4.2 Mixing and Application

Formulating, mixing, and application shall be performed in the presence of the Contracting Officer or the technical representative. A closed system is recommended as it prevents the termiticide from coming into contact with the applicator or other persons. Water for formulating shall only come from designated locations. Filling hoses shall be fitted with a backflow preventer meeting local plumbing codes or standards. Overflow shall be prevented during the filling operation. Prior to each day of use, the equipment used for applying termiticides shall be inspected for leaks, clogging, wear, or damage. Any repairs are to be performed immediately.

3.4.3 Treatment Method

For areas to be treated, the Contractor shall establish complete and unbroken vertical and/or horizontal soil poison barriers between the soil and all portions of the intended structure which may allow termite access to wood and wood related products. Application shall not be made to areas which serve as crawl spaces or for use as a plenum air space.

3.4.3.1 Surface Application

Surface application shall be used for establishing horizontal barriers. Surface applicants shall be applied as a coarse spray and provide uniform distribution over the soil surface. Termiticide shall penetrate a minimum of 1 inch into the soil, or as recommended by the manufacturer.

3.4.3.2 Rodding and Trenching

Rodding and trenching shall be used for establishing vertical soil barriers. Trenching shall be to the depth of the foundation footing. Width of trench shall be as recommended by the manufacturer, or as indicated. Rodding or other approved method may be implemented for saturating the base of the trench with termiticide. Immediately after termiticide has reached maximum penetration as recommended by the manufacturer, backfilling of the trench shall commence. Backfilling shall be in 6 inch rises or layers. Each rise shall be treated with termiticide.

3.4.4 Sampling

The Contracting Officer may draw from stocks at the job site, at any time and without prior notice, samples of the termiticides used to determine if the amount of active ingredient specified on the label is being applied.

3.5 VERIFICATION OF MEASUREMENT

Once termiticide application has been completed, tank contents shall be measured to determine the remaining volume. The total volume measurement of used contents for the application shall equal the established

application rate for the project site conditions. The Contractor shall provide written verification of the measurements.

3.6 CLEAN UP, DISPOSAL, AND PROTECTION

Once application has been completed, the Contractor shall proceed with clean up and protection of the site without delay.

3.6.1 Clean Up

The site shall be cleaned of all material associated with the treatment measures, according to label instructions, and as indicated. Excess and waste material shall be removed and disposed off site.

3.6.2 Disposal of Termiticide

The Contractor shall dispose of residual termiticides and containers off Government property, and in accordance with label instructions and EPA criteria.

3.6.3 Protection of Treated Area

Immediately after the application, the area shall be protected from other use by erecting barricades and providing signage as required or directed. Signage shall be in accordance with Section 10430 EXTERIOR SIGNAGE. Signage shall be placed inside the entrances to crawl spaces and shall identify the space as treated with termiticide and not safe for children and animals.

3.7 CONDITIONS FOR SATISFACTORY TREATMENT

3.7.1 Equipment Calibrations and Measurements

Where results from the equipment calibration and tank measurements tests are unsatisfactory, re-treatment will be required.

3.7.2 Testing

Should an analysis, performed by a third party, indicate that the samples of the applied termiticide contain less than the amount of active ingredient specified on the label, and/or if soils are treated to a depth less than specified or approved, re-treatment will be required.

3.7.3 Disturbance of Treated Soils

Soil and fill material disturbed after treatment shall be re-treated before placement of slabs or other covering structures.

3.7.4 Termites Found Within the Warranty Period

If live subterranean termite infestation or termite damage is discovered during the warranty period, the Contractor shall re-treat the site.

3.8 RE-TREATMENT

Where re-treatment is required, the Contractor shall:

a. Re-treat the soil and/or perform other treatment as necessary for prevention or elimination of subterranean termite infestation.

b. Repair damage caused by termite infestation.

-- End of Section --

SECTION 02510

WATER DISTRIBUTION SYSTEM
04/98

PART 1 GENERAL

1.1 REFERENCES

The publications listed below form a part of this specification to the extent referenced. The publications are referred to in the text by basic designation only.

AMERICAN SOCIETY FOR TESTING AND MATERIALS (ASTM)

ASTM B 88	(1996) Seamless Copper Water Tube
ASTM D 1784	(1999a) Rigid Poly(Vinyl Chloride) (PVC) Compounds and Chlorinated Poly(Vinyl Chloride) (CPVC) Compounds
ASTM D 1785	(1999) Poly(Vinyl Chloride) (PVC) Plastic Pipe, Schedules 40, 80, and 120
ASTM D 2241	(1996b) Poly(Vinyl Chloride) (PVC) Pressure-Rated Pipe (SDR Series)
ASTM D 2464	(1999) Threaded Poly(Vinyl Chloride) (PVC) Plastic Pipe Fittings, Schedule 80
ASTM D 2466	(1999) Poly(Vinyl Chloride) (PVC) Plastic Pipe Fittings, Schedule 40
ASTM D 2467	(1999) Poly(Vinyl Chloride) (PVC) Plastic Pipe Fittings, Schedule 80
ASTM D 2564	(1996a) Solvent Cements for Poly(Vinyl Chloride) (PVC) Plastic Piping Systems
ASTM D 2855	(1996) Making Solvent-Cemented Joints with Poly(Vinyl Chloride) (PVC) Pipe and Fittings
ASTM F 477	(1999) Elastomeric Seals (Gaskets) for Joining Plastic Pipe

ASME INTERNATIONAL (ASME)

ASME B1.20.1	(1983; R 1992) Pipe Threads, General Purpose (Inch)
ASME B16.1	(1998) Cast Iron Pipe Flanges and Flanged Fittings
ASME B16.26	(1988) Cast Copper Alloy Fittings for Flared Copper Tubes

AMERICAN WATER WORKS ASSOCIATION (AWWA)

AWWA B300	(1992) Hypochlorites
AWWA B301	(1992) Liquid Chlorine
AWWA C104	(1995) Cement-Mortar Lining for Ductile-Iron Pipe and Fittings for Water
AWWA C105	(1993) Polyethylene Encasement for Ductile-Iron Pipe Systems
AWWA C110	(1993) Ductile-Iron and Gray-Iron Fittings, 3 In. Through 48 In. (75 mm through 1200 mm), for Water and Other Liquids
AWWA C111	(1995) Rubber-Gasket Joints for Ductile-Iron Pressure Pipe and Fittings
AWWA C115	(1996) Flanged Ductile-Iron Pipe With Ductile-Iron or Gray-Iron Threaded Flanges
AWWA C151	(1996) Ductile-Iron Pipe, Centrifugally Cast, for Water or Other Liquids
AWWA C153	(1994; Errata Nov 1996) Ductile-Iron Compact Fittings, 3 In. Through 24 In. (76 mm through 610 mm) and 54 In. through 64 In. (1,400 mm through 1,600 mm) for Water Service
AWWA C500	(1993; C500a) Metal-Sealed Gate Valves for Water Supply Service
AWWA C502	(1994; C502a) Dry-Barrel Fire Hydrants
AWWA C509	(1994; Addendum 1995) Resilient-Seated Gate Valves for Water Supply Service
AWWA C600	(1993) Installation of Ductile-Iron Water Mains and Their Appurtenances
AWWA C606	(1997) Grooved and Shouldered Joints
AWWA C651	(1992) Disinfecting Water Mains
AWWA C700	(1995) Cold-Water Meters - Displacement Type, Bronze Main Case
AWWA C701	(1988) Cold-Water Meters - Turbine Type, for Customer Service
AWWA C702	(1992) Cold-Water Meters - Compound Type
AWWA C706	(1996) Direct-Reading, Remote-Registration Systems for Cold-Water Meters

AWWA C707	(1982; R 1992) Encoder-Type Remote-Registration Systems for Cold-Water Meters
AWWA C800	(1989) Underground Service Line Valves and Fittings
AWWA C900	(1997; C900a) Polyvinyl Chloride (PVC) Pressure Pipe, 4 In. Through 12 In., for Water Distribution
AWWA M23	(1980) Manual: PVC Pipe - Design and Installation

ASBESTOS CEMENT PIPE PRODUCERS ASSOCIATION (ACPPA)

ACPPA Work Practices	(1988) Recommended Work Practices for A/C Pipe

DUCTILE IRON PIPE RESEARCH ASSOCIATION (DIPRA)

DIPRA-Restraint Design	(1997) Thrust Restraint Design for Ductile Iron Pipe

MANUFACTURERS STANDARDIZATION SOCIETY OF THE VALVE AND FITTINGS INDUSTRY (MSS)

MSS SP-80	(1997) Bronze Gate, Globe, Angle and Check Valves

NATIONAL FIRE PROTECTION ASSOCIATION (NFPA)

NFPA 24	(1995) Installation of Private Fire Service Mains and Their Appurtenances
NFPA 49	(1994) Hazardous Chemicals Data
NFPA 325-1	(1994) Fire Hazard Properties of Flammable Liquids, Gases, and Volatile Solids
NFPA 704	(1996) Identification of the Fire Hazards of Materials for Emergency Response

NSF INTERNATIONAL (NSF)

NSF 14	(1998) Plastics Piping Components and Related Materials
NSF 61	(1999) Drinking Water System Components - Health Effects (Sections 1-9)

THE SOCIETY FOR PROTECTIVE COATINGS (SSPC)

SSPC Paint 21	(1991) White or Colored Silicone Alkyd Paint
SSPC Paint 25	(1991) Red Iron Oxide, Zinc Oxide, Raw Linseed Oil and Alkyd Primer (Without Lead and Chromate Pigments)

1.2 PIPING

This section covers water distribution lines, service lines, and connections to building service at a point approximately 5 feet outside buildings and structures to which service is required. The Contractor shall have a copy of the manufacturer's recommendations for each material or procedure to be utilized available at the construction site at all times.

1.2.1 Service Lines

Piping for water service lines less than 2-1/2 inches in diameter shall be polyvinyl chloride (PVC) plastic, or copper tubing, unless otherwise shown or specified. Piping for water service lines 3 inches and larger shall be ductile iron or polyvinyl chloride (PVC) plastic, unless otherwise shown or specified.

1.2.2 Distribution Lines 3 Inches or Larger

Piping for water distribution lines 3 inches or larger shall be ductile iron or polyvinyl chloride (PVC) through 12 inch nominal diameter plastic.

1.2.3 Supply Lines 3 Inches or Larger

Piping for water supply lines 3 inches or larger shall be ductile iron or polyvinyl chloride (PVC) plastic, through 12 inch nominal diameter, unless otherwise shown or specified.

1.2.4 Potable Water Lines

Piping and components of potable water systems which come in contact with the potable water shall conform to NSF 61.

1.2.5 Plastic Piping System

Plastic piping system components (PVC) intended for transportation of potable water shall comply with NSF 14 and be legibly marked with their symbol.

1.2.6 Sprinkler Supply Lines

Piping for water lines supplying sprinkler systems for building fire protection shall conform to NFPA 24 from the point of connection with the water distribution system to the building 5 foot line.

1.2.7 Excavation, Trenching, and Backfilling

Excavation, trenching, and backfilling shall be in accordance with the applicable provisions of Section 02316 EXCAVATION, TRENCHING, AND BACKFILLING FOR UTILITIES SYSTEMS, except as modified herein.

1.3 SUBMITTALS

Government approval is required for submittals with a "G" designation; submittals not having a "G" designation are for information only. When used, a designation following the "G" designation identifies the office that will review the submittal for the Government. The following shall be submitted in accordance with Section 01330 SUBMITTAL PROCEDURES:

SD-03 Product Data

Installation

The manufacturer's recommendations for each material or procedure to be utilized.

A statement signed by the principal officer of the contracting firm stating that the installation is satisfactory and in accordance with the contract drawings and specifications, and the manufacturer's prescribed procedures and techniques, upon completion of the project and before final acceptance.

Waste Water Disposal Method

The method proposed for disposal of waste water from hydrostatic tests and disinfection, prior to performing hydrostatic tests.

SD-06 Test Reports

Bacteriological Disinfection; G.

Test results from commercial laboratory verifying disinfection.

SD-07 Certificates

Installation

A statement signed by the manufacturer's field representative certifying that the Contractor's personnel are capable of properly installing the pipe on the project.

Meters

Manufacturer's certificate stating that each meter furnished has been tested for accuracy of registration and compliance with the accuracy and capacity requirements of the appropriate AWWA standard.

1.4 HANDLING

Pipe and accessories shall be handled to ensure delivery to the trench in sound, undamaged condition, including no injury to the pipe coating or lining. If the coating or lining of any pipe or fitting is damaged, the repair shall be made by the Contractor in a satisfactory manner, at no additional cost to the Government. No other pipe or material shall be placed inside a pipe or fitting after the coating has been applied. Pipe shall be carried into position and not dragged. Use of pinch bars and tongs for aligning or turning pipe will be permitted only on the bare ends of the pipe. The interior of pipe and accessories shall be thoroughly cleaned of foreign matter before being lowered into the trench and shall be kept clean during laying operations by plugging or other approved method. Before installation, the pipe shall be inspected for defects. Material found to be defective before or after laying shall be replaced with sound material without additional expense to the Government. Rubber gaskets that are not to be installed immediately shall be stored in a cool and dark place.

1.4.1 Miscellaneous Plastic Pipe and Fittings

Polyvinyl Chloride (PVC), pipe and fittings shall be handled and stored in accordance with the manufacturer's recommendations. Storage facilities shall be classified and marked in accordance with NFPA 704, with classification as indicated in NFPA 49 and NFPA 325-1.

PART 2 PRODUCTS

2.1 PIPE

Pipe shall conform to the respective specifications and other requirements specified below.

2.1.1 Plastic Pipe

2.1.1.1 PVC Plastic Pipe

Pipe, couplings and fittings shall be manufactured of material conforming to ASTM D 1784, Class 12454B.

a. Pipe Less Than 4 inch Diameter:

(1) Screw-Joint: Pipe shall conform to dimensional requirements of ASTM D 1785 Schedule 80, with joints meeting requirements of 150 psi working pressure, 200 psi hydrostatic test pressure, unless otherwise shown or specified. Pipe couplings when used, shall be tested as required by ASTM D 2464. Fire water lines shall meet 175 psi working pressure and 230 psi hydrostatic test pressure.

(2) Elastomeric-Gasket Joint: Pipe shall conform to dimensional requirements of ASTM D 1785 Schedule 40, with joints meeting the requirements of 150 psi working pressure, 200 psi hydrostatic test pressure, unless otherwise shown or specified, or it may be pipe conforming to requirements of ASTM D 2241, elastomeric joint, with the following applications:

SDR	Maximum Working Pressure psi	Minimum Hydrostatic Pressure psi
26	100	133
21	120	160
17	150	200
13.5	200	266

(3) Solvent Cement Joint: Pipe shall conform to dimensional requirements of ASTM D 1785 or ASTM D 2241 with joints meeting the requirements of 150 psi working pressure and 200 psi hydrostatic test pressure.

b. Pipe 4 through 12 inch Diameter: Pipe, couplings and fittings shall conform to AWWA C900, Class 150, CIOD pipe dimensions, elastomeric-gasket joint, unless otherwise shown or specified.

2.1.2 Ductile-Iron Pipe

Ductile-iron pipe shall conform to AWWA C151, working pressure not less

than 150 psi, unless otherwise shown or specified. Pipe shall be cement-mortar lined in accordance with AWWA C104. Fire water lines shall meet 175 psi working pressure and 230 psi hydrostatic test pressure. Linings shall be standard. When installed underground, pipe shall be encased with 6 mil thick polyethylene in accordance with AWWA C105. Flanged ductile iron pipe with threaded flanges shall be in accordance with AWWA C115.

2.1.3 Copper Tubing

Copper tubing shall conform to ASTM B 88, Type K, annealed.

2.2 FITTINGS AND SPECIALS

2.2.1 PVC Pipe System

a. For pipe less than 4 inch diameter, fittings for threaded pipe shall conform to requirements of ASTM D 2464, threaded to conform to the requirements of ASME B1.20.1 for use with Schedule 80 pipe and fittings; fittings for solvent cement jointing shall conform to ASTM D 2466 or ASTM D 2467; and fittings for elastomeric-gasket joint pipe shall be iron conforming to AWWA C110 or AWWA C111. Iron fittings and specials shall be cement-mortar lined (standard thickness) in accordance with AWWA C104.

b. For pipe 4 inch diameter and larger, fittings and specials shall be iron, bell end in accordance with AWWA C110, 150 psi pressure rating unless otherwise shown or specified, except that profile of bell may have special dimensions as required by the pipe manufacturer; or fittings and specials may be of the same material as the pipe with elastomeric gaskets, all in conformance with AWWA C900. Iron fittings and specials shall be cement-mortar lined (standard thickness) in accordance with AWWA C104. Fittings shall be bell and spigot or plain end pipe, or as applicable. Ductile iron compact fittings shall be in accordance with AWWA C153.

2.2.2 Ductile-Iron Pipe System

Fittings and specials shall be suitable for 150 psi pressure rating, unless otherwise specified. Fittings and specials for mechanical joint pipe shall conform to AWWA C110. Fittings and specials for use with push-on joint pipe shall conform to AWWA C110 and AWWA C111. Fittings and specials for grooved and shouldered end pipe shall conform to AWWA C606. Fittings and specials shall be cement-mortar lined (standard thickness) in accordance with AWWA C104. Ductile iron compact fittings shall conform to AWWA C153.

2.2.3 Copper Tubing System

Fittings and specials shall be flared and conform to ASME B16.26.

2.3 JOINTS

2.3.1 Plastic Pipe Jointing

2.3.1.1 PVC Pipe

Joints, fittings, and couplings shall be as specified for PVC pipe. Joints connecting pipe of differing materials shall be made in accordance with the manufacturer's recommendations, and as approved by the Contracting Officer.

2.3.2 Ductile-Iron Pipe Jointing

a. Mechanical joints shall be of the stuffing box type and shall conform to AWWA C111.

b. Push-on joints shall conform to AWWA C111.

c. Rubber gaskets and lubricants shall conform to the applicable requirements of AWWA C111.

2.3.3 Isolation Joints

Isolation joints shall be installed between nonthreaded ferrous and nonferrous metallic pipe, fittings and valves. Isolation joints shall consist of a sandwich-type flange isolation gasket of the dielectric type, isolation washers, and isolation sleeves for flange bolts. Isolation gaskets shall be full faced with outside diameter equal to the flange outside diameter. Bolt isolation sleeves shall be full length. Units shall be of a shape to prevent metal-to-metal contact of dissimilar metallic piping elements.

a. Sleeve-type couplings shall be used for joining plain end pipe sections. The two couplings shall consist of one steel middle ring, two steel followers, two gaskets, and the necessary steel bolts and nuts to compress the gaskets.

b. Split-sleeve type couplings may be used in aboveground installations when approved in special situations and shall consist of gaskets and a housing in two or more sections with the necessary bolts and nuts.

2.3.4 Copper Tubing Jointing

Joints shall be compression-pattern flared and shall be made with the specified fittings.

2.4 VALVES

2.4.1 Check Valves

Check valves shall be designed for a minimum working pressure of 150 psi or as indicated. Valves shall have a clear waterway equal to the full nominal diameter of the valve. Valves shall open to permit flow when inlet pressure is greater than the discharge pressure, and shall close tightly to prevent return flow when discharge pressure exceeds inlet pressure. The size of the valve, working pressure, manufacturer's name, initials, or trademark shall be cast on the body of each valve. Valves 2 inches and larger shall be outside lever and spring type.

a. Valves 2 inches and smaller shall be all bronze designed for screwed fittings, and shall conform to MSS SP-80, Class 150, Types 3 and 4 as suitable for the application.

b. Valves larger than 2 inches shall be iron body, bronze mounted, shall have flanged ends, and shall be the non-slam type. Flanges shall be the Class 125 type conforming to ASME B16.1.

2.4.2 Gate Valves

Gate valves shall be designed for a working pressure of not less than 150 psi for domestic water and 175 psi for fire water. Valve connections shall be as required for the piping in which they are installed. Valves shall have a clear waterway equal to the full nominal diameter of the valve, and shall be opened by turning counterclockwise. The operating nut or wheel shall have an arrow, cast in the metal, indicating the direction of opening.

a. Valves smaller than 3 inches shall be all bronze and shall conform to MSS SP-80, Type 1, Class 150.

b. Valves 3 inches and larger shall be iron body, bronze mounted, and shall conform to AWWA C500. Flanges shall not be buried. An approved pit shall be provided for all flanged connections.

c. Resilient-Seated Gate Valves: For valves 3 to 12 inches in size, resilient-seated gate valves shall conform to AWWA C509.

2.4.3 Indicator Post for Valves

Each valve shown on the drawings with the designation "P.I.V." shall be equipped with indicator post conforming to the requirements of NFPA 24. Operation shall be by a wrench which shall be attached to each post.

2.4.4 Vacuum and Air Relief Valves

Vacuum and air relief valves shall be of the size shown and shall be of a type that will release air and prevent the formation of a vacuum. The valves shall automatically release air when the lines are being filled with water and shall admit air into the line when water is being withdrawn in excess of the inflow. Valves shall be iron body with bronze trim and stainless steel float.

2.5 VALVE BOXES

Valve boxes shall be cast iron or concrete, except that concrete boxes may be installed only in locations not subjected to vehicular traffic. Cast-iron boxes shall be extension type with slide-type adjustment and with flared base. The minimum thickness of metal shall be 3/16 inch. Concrete boxes shall be the standard product of a manufacturer of precast concrete equipment. The word "WATER" shall be cast in the cover. The box length shall adapt, without full extension, to the depth of cover required over the pipe at the valve location.

2.6 VALVE PITS

Valve pits shall be constructed at locations indicated or as required above and in accordance with the details shown. Concrete shall have compressive strength of 3000 psi in accordance with Section 03300 CAST-IN-PLACE STRUCTURAL CONCRETE.

2.7 FIRE HYDRANTS

Hydrants shall be dry-barrel type conforming to AWWA C502 with valve opening at least 5 inches in diameter and designed so that the flange at the main valve seat can be removed with the main valve seat apparatus remaining intact, closed and reasonably tight against leakage and with a breakable valve rod coupling and breakable flange connections located no more than 8 inches above the ground grade. Hydrants shall have a 6 inch

bell connection, two 2-1/2 inch hose connections and one 4-1/2 inch pumper connection. Outlets shall have American National Standard fire-hose coupling threads. Working parts shall be bronze. Design, material, and workmanship shall be equal to the latest stock pattern ordinarily produced by the manufacturer. Hydrants shall be painted with 1 coat of red iron oxide, zinc oxide primer conforming to SSPC Paint 25 and 2 finish coats of silicone alkyd paint conforming to SSPC Paint 21, of the installation's standard colors or as directed by the Contracting Officer. Suitable bronze adapter for each outlet, with caps, shall be furnished.

cc2.8 MISCELLANEOUS ITEMS

2.8.1 Service Clamps

Service clamps shall have a pressure rating not less than that of the pipe to be connected and shall be either the single or double flattened strap type. Clamps shall have a galvanized malleable-iron body with cadmium plated straps and nuts. Clamps shall have a rubber gasket cemented to the body.

2.8.2 Corporation Stops

Corporation stops shall have standard corporation stop thread conforming to AWWA C800 on the inlet end, with flanged joints, compression pattern flared tube couplings, or wiped joints for connections to goosenecks.

2.8.3 Goosenecks

Copper tubing for gooseneck connections shall conform to the applicable requirements of ASTM B 88, Type K, annealed. Length of cable requirement connections shall be in accordance with standard practice.

2.8.4 Service Stops

Service stops shall be water-works inverted-ground-key type, oval or round flow way, tee handle, without drain. Pipe connections shall be suitable for the type of service pipe used. All parts shall be of bronze with female iron-pipe-size connections or compression-pattern flared tube couplings, and shall be designed for a hydrostatic test pressure not less than 200 psi.

2.8.5 Tapping Sleeves

Tapping sleeves of the sizes indicated for connection to existing main shall be the cast gray, ductile, or malleable iron, split-sleeve type with flanged or grooved outlet, and with bolts, follower rings and gaskets on each end of the sleeve. Construction shall be suitable for a maximum working pressure of 230 psi. Bolts shall have square heads and hexagonal nuts. Longitudinal gaskets and mechanical joints with gaskets shall be as recommended by the manufacturer of the sleeve. When using grooved mechanical tee, it shall consist of an upper housing with full locating collar for rigid positioning which engages a machine-cut hole in pipe, encasing an elastomeric gasket which conforms to the pipe outside diameter around the hole and a lower housing with positioning lugs, secured together during assembly by nuts and bolts as specified, pretorqued to 50 foot-pound.

2.8.6 Service Boxes

Service boxes shall be cast iron or concrete and shall be extension service

boxes of the length required for the depth of the line, with either screw or slide-type adjustment. The boxes shall have housings of sufficient size to completely cover the service stop or valve and shall be complete with identifying covers.

2.8.7 Disinfection

Chlorinating materials shall conform to the following:

Chlorine, Liquid: AWWA B301.

Hypochlorite, Calcium and Sodium: AWWA B300.

2.8.8 Meters

Meters shall be the type and size shown on the drawings or specified. Meters of each of the various types furnished and installed shall be supplied by one manufacturer.

2.8.8.1 Displacement Type

Displacement type meters shall conform to AWWA C700. Registers shall be straight-reading and shall read in U.S. gallons. Meters in sizes 1/2 through 1 inch shall be frost-protection design. Connections shall be suitable to the type of pipe and conditions encountered. Register type shall be a direct reading remote register designed in accordance with AWWA C706 or an encoder type remote register designed in accordance with AWWA C707. Meters shall comply with the accuracy and capacity requirements of AWWA C700.

2.8.8.2 Turbine Type

Turbine type meters shall conform to AWWA C701 Class I. The main casing shall be bronze with stainless steel external fasteners. Registers shall be straight-reading type, shall be permanently sealed and shall read in U.S. gallons. Connections shall be suitable to the type of pipe and conditions encountered. Register type shall be a direct reading remote register designed in accordance with AWWA C706. Meters shall comply with the accuracy and capacity requirements of AWWA C701.

2.8.8.3 Compound Type

Compound type meters shall conform to AWWA C702 and shall be furnished with strainers. The main casing shall be bronze protected by corrosion resistant coating with stainless steel external fasteners. The main casing shall be tapped for field testing purposes. Registers shall be straight-reading type, shall be permanently sealed and shall read in U.S. gallons. The meter shall not be equipped with a coordinating register. Connections shall be suitable to the type of pipe and conditions encountered. Register type shall be a direct reading remote register designed in accordance with AWWA C706 or an encoder type remote register designed in accordance with AWWA C707. Meters shall comply with the accuracy and capacity requirements of AWWA C702.

2.8.9 Meter Boxes

Meter boxes shall be of cast iron, concrete, or plastic. The boxes shall be of sufficient size to completely enclose the meter and shutoff valve or service stop. Meter boxes set in paved areas subject to vehicular traffic

shall be cast iron, or concrete with cast iron lid and cast iron meter reader lid. Boxes set in sidewalks, not subject to vehicular traffic, shall be concrete with cast iron lid and cast iron meter reader lid. Plastic boxes and lids shall not be used in unpaved areas or grass areas not subject to vehicular traffic. Box height shall extend from invert of the meter to final grade at the meter location. The lid shall have the word "WATER" cast in it.

PART 3 EXECUTION

3.1 INSTALLATION

3.1.1 Cutting of Pipe

Cutting of pipe shall be done in a neat and workmanlike manner without damage to the pipe. Unless otherwise recommended by the manufacturer and authorized by the Contracting Officer, cutting shall be done with an approved type mechanical cutter. Wheel cutter shall be used when practicable. Copper tubing shall be cut square and all burrs shall be removed. Squeeze type mechanical cutters shall not be used for ductile iron.

3.1.2 Adjacent Facilities

3.1.2.1 Sewer Lines

Where the location of the water pipe is not clearly defined in dimensions on the drawings, the water pipe shall not be laid closer horizontally than 10 feet from a sewer except where the bottom of the water pipe will be at least 12 inches above the top of the sewer pipe, in which case the water pipe shall not be laid closer horizontally than 6 feet from the sewer. Where water lines cross under gravity-flow sewer lines, the sewer pipe, for a distance of at least 10 feet each side of the crossing, shall be fully encased in concrete or shall be made of pressure pipe with no joint located within 3 feet horizontally of the crossing. Water lines shall in all cases cross above sewage force mains or inverted siphons and shall be not less than 2 feet above the sewer main. Joints in the sewer main, closer horizontally than 3 feet to the crossing, shall be encased in concrete.

3.1.2.2 Water Lines

Water lines shall not be laid in the same trench with sewer lines, gas lines, fuel lines, or electric wiring.

3.1.2.3 Copper Tubing Lines

Copper tubing shall not be installed in the same trench with ferrous piping materials.

3.1.2.4 Structures

Where water pipe is required to be installed within 3 feet of existing structures, the water pipe shall be sleeved as required in Paragraph "Casing Pipe". The Contractor shall install the water pipe and sleeve ensuring that there will be no damage to the structures and no settlement or movement of foundations or footings.

3.1.3 Joint Deflection

3.1.3.1 Offset for Flexible Plastic Pipe

Maximum offset in alignment between adjacent pipe joints shall be as recommended by the manufacturer and approved by the Contracting Officer, but shall not exceed 5 degrees.

3.1.3.2 Allowable for Ductile-Iron Pipe

The maximum allowable deflection shall be as given in AWWA C600. If the alignment requires deflection in excess of the above limitations, special bends or a sufficient number of shorter lengths of pipe shall be furnished to provide angular deflections within the limit set forth.

3.1.4 Placing and Laying

Pipe and accessories shall be carefully lowered into the trench by means of derrick, ropes, belt slings, or other authorized equipment. Water-line materials shall not be dropped or dumped into the trench. Abrasion of the pipe coating shall be avoided. Except where necessary in making connections with other lines or as authorized by the Contracting Officer, pipe shall be laid with the bells facing in the direction of laying. The full length of each section of pipe shall rest solidly upon the pipe bed, with recesses excavated to accommodate bells, couplings, and joints. Pipe that has the grade or joint disturbed after laying shall be taken up and relaid. Pipe shall not be laid in water or when trench conditions are unsuitable for the work. Water shall be kept out of the trench until joints are complete. When work is not in progress, open ends of pipe, fittings, and valves shall be securely closed so that no trench water, earth, or other substance will enter the pipes or fittings. Where any part of the coating or lining is damaged, the repair shall be made by and at the Contractor's expense in a satisfactory manner. Pipe ends left for future connections shall be valved, plugged, or capped, and anchored, as shown.

3.1.4.1 Plastic Pipe Installation

PVC pipe shall be installed in accordance with AWWA M23.

3.1.4.2 Piping Connections

Where connections are made between new work and existing mains, the connections shall be made by using specials and fittings to suit the actual conditions. When made under pressure, these connections shall be installed using standard methods as approved by the Contracting Officer. Connections to existing asbestos-cement pipe shall be made in accordance with ACPPA Work Practices.

3.1.4.3 Penetrations

Pipe passing through walls of valve pits and structures shall be provided with ductile-iron or Schedule 40 steel wall sleeves. Annular space between walls and sleeves shall be filled with rich cement mortar. Annular space between pipe and sleeves shall be filled with mastic.

3.1.4.4 Flanged Pipe

Flanged pipe shall only be installed above ground or with the flanges in valve pits.

3.1.5 Jointing

3.1.5.1 PVC Plastic Pipe Requirements

a. Pipe less than 4 inch diameter: Threaded joints shall be made by wrapping the male threads with approved thread tape or applying an approved lubricant, then threading the joining members together. The joint shall be tightened using strap wrenches to prevent damage to the pipe and/or fitting. To avoid excessive torque, joints shall be tightened no more than one thread past hand-tight. Preformed rubber-ring gaskets for elastomeric-gasket joints shall be made in accordance with ASTM F 477 and as specified. Pipe ends for push-on joints shall be beveled to facilitate assembly and marked to indicate when the pipe is fully seated. The gasket shall be prelubricated to prevent displacement. The gasket and ring groove in the bell or coupling shall match. The manufacturer of the pipe or fitting shall supply the elastomeric gasket. Couplings shall be provided with stops or centering rings to assure that the coupling is centered on the joint. Solvent cement joints shall use sockets conforming to ASTM D 2467. The solvent cement used shall meet the requirements of ASTM D 2564; the joint assembly shall be made in accordance with ASTM D 2855 and the manufacturer's specific recommendations.

b. Pipe 4 through 12 inch diameter: Joints shall be elastomeric gasket as specified in AWWA C900. Jointing procedure shall be as specified for pipe less than 4 inch diameter with configuration using elastomeric ring gasket.

c. Pipe 14 through 36 inch diameter: Joints shall be elastomeric gasket push-on joints made in accordance with AWWA M23.

3.1.5.2 Ductile-Iron Pipe Requirements

Mechanical and push-on type joints shall be installed in accordance with AWWA C600 for buried lines or AWWA C606 for grooved and shouldered pipe above ground or in pits.

3.1.5.3 Copper Tubing Requirements

Joints shall be made with flared fittings. The flared end tube shall be pulled tightly against the tapered part of the fitting by a nut which is part of the fitting, so there is metal-to-metal contact.

3.1.5.4 Bonded Joints Requirements

Bonded joints shall be installed in accordance with details specified for joints in paragraph JOINTS.

3.1.5.5 Isolation Joints and Dielectric Fittings

Isolation joints and dielectric fittings shall be installed in accordance with details specified in paragraph JOINTS. Dielectric unions shall be encapsulated in a field-poured coal-tar covering, with at least 1/8 inch thickness of coal tar over all fitting surfaces.

3.1.5.6 Transition Fittings

Connections between different types of pipe and accessories shall be made with transition fittings approved by the Contracting Officer.

3.1.6 Installation of Service Lines

Service lines shall include the pipeline connecting building piping to water distribution lines to the connections with the building service at a point approximately 5 feet outside the building where such building service exists. Where building services are not installed, the Contractor shall terminate the service lines approximately 5 feet from the site of the proposed building at a point designated by the Contracting Officer. Such service lines shall be closed with plugs or caps. All service stops and valves shall be provided with service boxes. Service lines shall be constructed in accordance with the following requirements:

3.1.6.1 Service Lines 2 Inches and Smaller

Service lines 2 inches and smaller shall be connected to the main by a directly-tapped corporation stop or by a service clamp. A corporation stop and a copper gooseneck shall be provided with either type of connection. Maximum sizes for directly-tapped corporation stops and for outlets with service clamps shall be as in TABLE I. Where 2 or more gooseneck connections to the main are required for an individual service, such connections shall be made with standard branch connections. The total clear area of the branches shall be at least equal to the clear area of the service which they are to supply.

TABLE I. SIZE OF CORPORATION STOPS AND OUTLET

Pipe Size Inches	Corporation Stops, Inches For Ductile-Iron Pipe	Outlets w/Service Clamps, Inches Single & Double Strap
3	--	1
4	1	1
6	1-1/4	1-1/2
8	1-1/2	2
10	1-1/2	2
12 & larger	2	2

NOTE:

a. Service lines 1-1/2 inches and smaller shall have a service stop.

b. Service lines 2 inches in size shall have a gate valve.

3.1.6.2 Service Lines Larger than 2 Inches

Service lines larger than 2 inches shall be connected to the main by a tapped saddle, tapping sleeve and valve, service clamp or reducing tee, depending on the main diameter and the service line diameter, and shall have a gate valve. Lines 3 inches and larger may use rubber-seated butterfly valves as specified above, or gate valves.

3.1.7 Setting of Fire Hydrants, Meters, Valves and Valve Boxes

3.1.7.1 Location of Fire Hydrants

Fire hydrants shall be located and installed as shown. Each hydrant shall be connected to the main with a 6 inch branch line having at least as much cover as the distribution main. Hydrants shall be set plumb with pumper nozzle facing the roadway, with the center of the lowest outlet not less than 18 inches above the finished surrounding grade, and the operating nut not more than 48 inches above the finished surrounding grade. Fire hydrants designated on the drawings as low profile shall have the lowest outlet not less than 18 inches above the finished surrounding grade, the top of the hydrant not more than 24 inches above the finished surrounding grade. Except where approved otherwise, the backfill around hydrants shall be thoroughly compacted to the finished grade immediately after installation to obtain beneficial use of the hydrant as soon as practicable. The hydrant shall be set upon a slab of concrete not less than 4 inches thick and 15 inchessquare. Not less than 7 cubic feet of free-draining broken stone or gravel shall be placed around and beneath the waste opening of dry barrel hydrants to ensure drainage.

3.1.7.2 Location of Meters

Meters and meter boxes shall be installed at the locations shown on the drawings. The meters shall be centered in the boxes to allow for reading and ease of removal or maintenance.

3.1.7.3 Location of Valves

After delivery, valves, including those in hydrants, shall be drained to prevent freezing and shall have the interiors cleaned of all foreign matter before installation. Stuffing boxes shall be tightened and hydrants and valves shall be fully opened and fully closed to ensure that all parts are in working condition. Check, pressure reducing, vacuum, and air relief valves shall be installed in valve pits. Valves and valve boxes shall be installed where shown or specified, and shall be set plumb. Valve boxes shall be centered on the valves. Boxes shall be installed over each outside gate valve unless otherwise shown. Where feasible, valves shall be located outside the area of roads and streets. Earth fill shall be tamped around each valve box or pit to a distance of 4 feet on all sides of the box, or the undisturbed trench face if less than 4 feet.

3.1.7.4 Location of Service Boxes

Where water lines are located below paved streets having curbs, the boxes shall be installed directly back of the curbs. Where no curbing exists, service boxes shall be installed in accessible locations, beyond the limits of street surfacing, walks and driveways.

3.1.8 Tapped Tees and Crosses

Tapped tees and crosses for future connections shall be installed where shown.

3.1.9 Thrust Restraint

Plugs, caps, tees and bends deflecting 11.25 degrees or more, either vertically or horizontally, on waterlines 4 inches in diameter or larger, and fire hydrants shall be provided with thrust restraints. Valves shall be securely anchored or shall be provided with thrust restraints to prevent

movement. Thrust restraints shall be either thrust blocks or, for ductile-iron pipes, restrained joints.

3.1.9.1 Thrust Blocks

Thrust blocking shall be concrete of a mix not leaner than: 1 cement, 2-1/2 sand, 5 gravel; and having a compressive strength of not less than 2,000 psi after 28 days. Blocking shall be placed between solid ground and the hydrant or fitting to be anchored. Unless otherwise indicated or directed, the base and thrust bearing sides of thrust blocks shall be poured directly against undisturbed earth. The sides of thrust blocks not subject to thrust may be poured against forms. The area of bearing shall be as shown or as directed. Blocking shall be placed so that the fitting joints will be accessible for repair. Steel rods and clamps, protected by galvanizing or by coating with bituminous paint, shall be used to anchor vertical down bends into gravity thrust blocks.

3.1.9.2 Restrained Joints

For ductile-iron pipe, restrained joints shall be designed by the Contractor or the pipe manufacturer in accordance with DIPRA-Restraint Design.

3.2 HYDROSTATIC TESTS

Where any section of a water line is provided with concrete thrust blocking for fittings or hydrants, the hydrostatic tests shall not be made until at least 5 days after installation of the concrete thrust blocking, unless otherwise approved.

3.2.1 Pressure Test

After the pipe is laid, the joints completed, fire hydrants permanently installed, and the trench partially backfilled leaving the joints exposed for examination, the newly laid piping or any valved section of piping shall, unless otherwise specified, be subjected for 1 hour to a hydrostatic pressure test of 200 psi. Water supply lines designated on the drawings shall be subjected for 1 hour to a hydrostatic pressure test of 200 psi. Each valve shall be opened and closed several times during the test. Exposed pipe, joints, fittings, hydrants, and valves shall be carefully examined during the partially open trench test. Joints showing visible leakage shall be replaced or remade as necessary. Cracked or defective pipe, joints, fittings, hydrants and valves discovered in consequence of this pressure test shall be removed and replaced with sound material, and the test shall be repeated until the test results are satisfactory. The requirement for the joints to remain exposed for the hydrostatic tests may be waived by the Contracting Officer when one or more of the following conditions is encountered:

a. Wet or unstable soil conditions in the trench.

b. Compliance would require maintaining barricades and walkways around and across an open trench in a heavily used area that would require continuous surveillance to assure safe conditions.

c. Maintaining the trench in an open condition would delay completion of the project.

The Contractor may request a waiver, setting forth in writing the reasons

for the request and stating the alternative procedure proposed to comply with the required hydrostatic tests. Backfill placed prior to the tests shall be placed in accordance with the requirements of Section 02316 EXCAVATION, TRENCHING, AND BACKFILLING FOR UTILITIES SYSTEMS.

3.2.2 Leakage Test

Leakage test shall be conducted after the pressure tests have been satisfactorily completed. The duration of each leakage test shall be at least 2 hours, and during the test the water line shall be subjected to not less than 200 psi pressure. Fire water supply lines designated on the drawings shall be subjected to a pressure equal to 230 psi. Leakage is defined as the quantity of water to be supplied into the newly laid pipe, or any valved or approved section, necessary to maintain pressure within 5 psi of the specified leakage test pressure after the pipe has been filled with water and the air expelled. Piping installation will not be accepted if leakage exceeds the allowable leakage which is determined by the following formula:

L = 0.0001351ND(P raised to 0.5 power)

L = Allowable leakage in gallons per hour
N = Number of joints in the length of pipeline tested
D = Nominal diameter of the pipe in inches
P = Average test pressure during the leakage test, in psi gauge

Should any test of pipe disclose leakage greater than that calculated by the above formula, the defective joints shall be located and repaired until the leakage is within the specified allowance, without additional cost to the Government.

3.2.3 Time for Making Test

Except for joint material setting or where concrete thrust blocks necessitate a 5-day delay, pipelines jointed with rubber gaskets, mechanical or push-on joints, or couplings may be subjected to hydrostatic pressure, inspected, and tested for leakage at any time after partial completion of backfill. Cement-mortar lined pipe may be filled with water as recommended by the manufacturer before being subjected to the pressure test and subsequent leakage test.

3.2.4 Concurrent Hydrostatic Tests

The Contractor may elect to conduct the hydrostatic tests using either or both of the following procedures. Regardless of the sequence of tests employed, the results of pressure tests, leakage tests, and disinfection shall be as specified. Replacement, repair or retesting required shall be accomplished by the Contractor at no additional cost to the Government.

a. Pressure test and leakage test may be conducted concurrently.

b. Hydrostatic tests and disinfection may be conducted concurrently, using the water treated for disinfection to accomplish the hydrostatic tests. If water is lost when treated for disinfection and air is admitted to the unit being tested, or if any repair procedure results in contamination of the unit, disinfection shall be reaccomplished.

3.2.5 Waste Water Disposal Method

All wastewater from performing tests shall be disposed of in accordance with all Federal, State, and Local laws.

3.3 BACTERIOLOGICAL DISINFECTION

3.3.1 Bacteriological Disinfection

Before acceptance of potable water operation, each unit of completed waterline shall be disinfected as prescribed by AWWA C651. From several points in the unit, personnel from the Contractor's commercial laboratory shall take at least 3 water samples from different points, approved by the Contracting Officer, in proper sterilized containers and perform a bacterial examination in accordance with state approved methods. The commercial laboratory shall be certified by the state's approving authority for examination of potable water. The disinfection shall be repeated until tests indicate the absence of pollution for at least 2 full days. The unit will not be accepted until satisfactory bacteriological results have been obtained.

3.4 CLEANUP

Upon completion of the installation of water lines, and appurtenances, all debris and surplus materials resulting from the work shall be removed.

-- End of Section --

SECTION 02531

SANITARY SEWERS
04/01

PART 1 GENERAL

1.1 REFERENCES

The publications listed below form a part of this specification to the extent referenced. The publications are referred to in the text by basic designation only.

AMERICAN SOCIETY FOR TESTING AND MATERIALS (ASTM)

ASTM A 123/A 123M	(2000) Zinc (Hot-Dip Galvanized) Coatings on Iron and Steel Products
ASTM C 33	(1999ael) Concrete Aggregates
ASTM C 94/C 94M	(2000) Ready-Mixed Concrete
ASTM C 150	(1999a) Portland Cement
ASTM C 270	(2000) Mortar for Unit Masonry
ASTM C 443	(1998) Joints for Circular Concrete Sewer and Culvert Pipe, Using Rubber Gaskets
ASTM C 478	(1997) Precast Reinforced Concrete Manhole Sections
ASTM C 478M	(1997) Precast Reinforced Concrete Manhole Sections (Metric)
ASTM C 828	(1998) Low-Pressure Air Test of Vitrified Clay Pipe Lines
ASTM C 924	(1998) Concrete Pipe Sewer Lines by Low-Pressure Air Test Method
ASTM C 972	(2000) Compression-Recovery of Tape Sealant
ASTM D 412	(1998a) Vulcanized Rubber and Thermoplastic Rubbers and Thermoplastic Elastomers - Tension
ASTM D 624	(2000) Tear Strength of Conventional Vulcanized Rubber and Thermoplastic Elastomers
ASTM D 1784	(1999a) Rigid Poly(Vinyl Chloride) (PVC) Compounds and Chlorinated Poly(Vinyl Chloride) (CPVC) Compounds
ASTM D 2680	(1995a)Acrylonitrile-Butadiene-Styrene

	(ABS) and Poly(Vinyl Chloride) (PVC) Composite Sewer Piping
ASTM D 3034	(1998) Type PSM Poly(Vinyl Chloride) (PVC) Sewer Pipe and Fittings
ASTM D 3212	(1996a) Joints for Drain and Sewer Plastic Pipes Using Flexible Elastomeric Seals
ASTM D 3350	(1999) Polyethylene Plastics Pipe and Fittings Materials
ASTM F 402	(1993; R 1999) Safe Handling of Solvent Cements, Primers, and Cleaners Used for Joining Thermoplastic Pipe and Fittings
ASTM F 714	(2000) Polyethylene (PE) Plastic pipe (SDR-PR) Based on Outside Diameter
ASTM F 894	(1998a) Polyethylene (PE) Large Diameter Profile Wall Sewer and Drain Pipe

AMERICAN WATER WORKS ASSOCIATION (AWWA)

AWWA C110	(1998) Ductile-Iron and Gray-Iron Fittings, 3 In. Through 48 In. (75 mm through 1200 mm), for Water and Other Liquids
AWWA C111	(2000) Rubber-Gasket Joints for Ductile-Iron Pressure Pipe and Fittings
AWWA C115	(1999) Flanged Ductile-Iron Pipe with Ductile-Iron or Gray-Iron Threaded Flanges
AWWA C151	(1996) Ductile-Iron Pipe, Centrifugally Cast, for Water or Other Liquids

NATIONAL FIRE PROTECTION ASSOCIATION (NFPA)

NFPA 49	(1994) Hazardous Chemicals Data
NFPA 325-1	(1994) Fire Hazard Properties of Flammable Liquids, Gases, and Volatile Solids
NFPA 704	(1996) Identification of the Fire Hazards of Materials for Emergency Response

UNI-BELL PVC PIPE ASSOCIATION (UBPPA)

UBPPA UNI-B-6	(1990) Recommended Practice for the Low-Pressure Air Testing of Installed Sewer Pipe

1.2 GENERAL REQUIREMENTS

The construction required herein shall include appurtenant structures and building sewers to points of connection with the building drains 5 feet outside the building to which the sewer system is to be connected. The

Contractor shall replace damaged material and redo unacceptable work at no additional cost to the Government. Excavation and backfilling is specified in Section 02316 EXCAVATION, TRENCHING, AND BACKFILLING FOR UTILITIES SYSTEMS. Backfilling shall be accomplished after inspection by the Contracting Officer. Force mains and inverted siphons are specified in Section 02532 FORCE MAINS AND INVERTED SIPHONS; SEWER. Before, during, and after installation, plastic pipe and fittings shall be protected from any environment that would result in damage or deterioration to the material. The Contractor shall have a copy of the manufacturer's instructions available at the construction site at all times and shall follow these instructions unless directed otherwise by the Contracting Officer. Solvents, solvent compounds, lubricants, elastomeric gaskets, and any similar materials required to install the plastic pipe shall be stored in accordance with the manufacturer's recommendation and shall be discarded if the storage period exceeds the recommended shelf life. Solvents in use shall be discarded when the recommended pot life is exceeded.

1.3 SUBMITTALS

Government approval is required for submittals with a "G" designation; submittals not having a "G" designation are for information only. When used, a designation following the "G" designation identifies the office that will review the submittal for the Government. The following shall be submitted in accordance with Section 01330 SUBMITTAL PROCEDURES:

SD-07 Certificates

Portland Cement

Certificates of compliance stating the type of cement used in manufacture of concrete pipe, fittings and precast manholes.

Joints

Certificates of compliance stating that the fittings or gaskets used for waste drains or lines designated on the plans as IW are oil resistant.

PART 2 PRODUCTS

2.1 PIPE

Pipe shall conform to the respective specifications and other requirements specified below.

2.1.1 Plastic Pipe

Polyvinyl chloride (PVC) composite sewer piping shall conform to ASTM D 2680. Size 6 inch through 15 inch diameter.

2.1.1.1 PVC Pipe

ASTM D 3034, Type PSM with a maximum SDR of 35, Size 15 inches or less in diameter. PVC shall be certified by the compounder as meeting the requirements of ASTM D 1784, cell Class 12454B. The pipe stiffness shall be greater than or equal to 735/D for cohesionless material pipe trench backfills.

2.1.1.2 High Density Polyethylene Pipe

ASTM F 894, Class 63, size 18 inch through 120 inch. ASTM F 714, size 4 inch through 48 inch. The polyethylene shall be certified by the resin producer as meeting the requirements of ASTM D 3350, cell Class 334433C. The pipe stiffness shall be greater than or equal to 1170/D for cohesionless material pipe trench backfills.

2.1.2 Ductile Iron Pipe

Pipe shall conform to AWWA C151 unless otherwise shown or specified.

2.2 REQUIREMENTS FOR FITTINGS

Fittings shall be compatible with the pipe supplied and shall have a strength not less than that of the pipe. Fittings shall conform to the respective specifications and other requirements specified below.

2.2.1 Fittings for Plastic Pipe

2.2.1.1 Fittings for PVC Pipe

ASTM D 3034 for type PSM pipe.

2.2.1.2 Fittings for High Density Polyethylene Pipe

ASTM F 894.

2.2.2 Fittings for Ductile Iron Pipe

Mechanical fittings shall conform to AWWA C110, rated for 150 psi. Push-on fittings shall conform to AWWA C110 and AWWA C111, rated for 150 psi.

2.3 JOINTS

Joints installation shall comply with the manufacturer's instructions. Fittings and gaskets utilized for waste drains or industrial waste lines shall be certified by the manufacturer as oil resistant.

2.3.1 Plastic Pipe Jointing

Flexible plastic pipe (PVC or high density polyethylene pipe) gasketed joints shall conform to ASTM D 3212.

2.3.1.1 High Density Polyethylene Pipe Jointing

Rubber gasket joints shall conform to ASTM C 443.

2.3.2 Ductile Iron Pipe Jointing

Push-on joints shall conform to AWWA C111. Mechanical joints shall conform to AWWA C111 as modified by AWWA C151. Flanged joints shall conform to AWWA C115.

2.4 BRANCH CONNECTIONS

Branch connections shall be made by use of regular fittings or solvent cemented saddles as approved. Saddles for PVC composite pipe shall conform to Figure 2 of ASTM D 2680 and saddles for PVC pipe shall conform to Table

4 of ASTM D 3034.

2.5 FRAMES AND COVERS

Frames and covers shall be cast iron, ductile iron or reinforced concrete. Cast iron frames and covers shall be as indicated or shall be of type suitable for the application, circular, without vent holes. The frames and covers shall have a combined weight of not less than 400 pounds. Reinforced concrete frames and covers shall be as indicated or shall conform to ASTM C 478 or ASTM C 478M. The word "Sewer" shall be stamped or cast into covers so that it is plainly visible.

2.6 STEEL LADDER

A steel ladder shall be provided where the depth of a manhole exceeds 8 feet. The ladder shall not be less than 16 inches in width, with 3/4 inch diameter rungs spaced 12 inches apart. The two stringers shall be a minimum 3/8 inch thick and 2 inches wide. Ladders and inserts shall be galvanized after fabrication in conformance with ASTM A 123/A 123M.

2.7 CEMENT MORTAR

Cement mortar shall conform to ASTM C 270, Type M with Type II cement.

2.7.1 Portland Cement

Portland cement shall conform to ASTM C 150, Type II for concrete used in concrete pipe, concrete pipe fittings, and manholes and type optional with the Contractor for cement used in concrete cradle, concrete encasement, and thrust blocking. Where aggregates are alkali reactive, as determined by Appendix XI of ASTM C 33, a cement containing less than 0.60 percent alkalies shall be used.

2.7.2 Portland Cement Concrete

Portland cement concrete shall conform to ASTM C 94/C 94M, compressive strength of 4000 psi at 28 days, except for concrete cradle and encasement or concrete blocks for manholes. Concrete used for cradle and encasement shall have a compressive strength of 2500 psi minimum at 28 days. Concrete in place shall be protected from freezing and moisture loss for 7 days.

2.8 STRUCTURES

2.8.1 Precast Reinforced Concrete Manhole Sections

Precast reinforced concrete manhole sections shall conform to ASTM C 478, except that portland cement shall be as specified herein. Joints shall be cement mortar, an approved mastic, rubber gaskets, a combination of these types; or the use of external preformed rubber joint seals and extruded rolls of rubber with mastic adhesive on one side.

PART 3 EXECUTION

3.1 INSTALLATION

3.1.1 Adjacent Facilities

3.1.1.1 Water Lines

Where the location of the sewer is not clearly defined by dimensions on the drawings, the sewer shall not be closer horizontally than 10 feet to a water-supply main or service line, except that where the bottom of the water pipe will be at least 18 inches above the top of the sewer pipe, the horizontal spacing may be a minimum of 10 feet. Where gravity-flow sewers cross above water lines, the sewer pipe for a distance of 10 feet on each side of the crossing shall be fully encased in concrete or shall be acceptable pressure pipe with no joint closer horizontally than 3 feet to the crossing. The thickness of the concrete encasement including that at the pipe joints shall be not less than 4 inches.

3.1.1.2 Structural Foundations

Where sewer pipe is to be installed within 3 feet of an existing or proposed building or structural foundation such as a retaining wall, control tower footing, water tank footing, or any similar structure, the sewer pipe shall be sleeved as specified above. Contractor shall ensure there is no damage to these structures, and no settlement or movement of foundations or footing.

3.1.2 Pipe Laying

a. Pipe shall be protected during handling against impact shocks and free fall; the pipe interior shall be free of extraneous material.

b. Pipe laying shall proceed upgrade with the spigot ends of bell-and-spigot pipe and tongue ends of tongue-and-groove pipe pointing in the direction of the flow. Each pipe shall be laid accurately to the line and grade shown on the drawings. Pipe shall be laid and centered so that the sewer has a uniform invert. As the work progresses, the interior of the sewer shall be cleared of all superfluous materials.

c. Before making pipe joints, all surfaces of the portions of the pipe to be joined shall be clean and dry. Lubricants, primers, and adhesives shall be used as recommended by the pipe manufacturer. The joints shall then be placed, fitted, joined, and adjusted to obtain the degree of water tightness required.

d. Installations of solvent weld joint pipe, using ABS or PVC pipe and fittings shall be in accordance with ASTM F 402. The Contractor shall ensure adequate trench ventilation and protection for workers installing the pipe.

3.1.2.1 Caulked Joints

The packing material shall be well packed into the annular space to prevent the entrance of lead into the pipe. The remainder of the space shall be filled with molten lead that is hot enough to show a rapid change in color when stirred. Scum shall be removed before pouring. The lead shall be caulked to form a tight joint without overstraining the bell and shall have a minimum depth of 1 inch after caulking.

3.1.2.2 Trenches

Trenches shall be kept free of water and as dry as possible during bedding, laying, and jointing and for as long a period as required. When work is not in progress, open ends of pipe and fittings shall be satisfactorily

closed so that no trench water or other material will enter the pipe or fittings.

3.1.2.3 Backfill

As soon as possible after the joint is made, sufficient backfill material shall be placed along the pipe to prevent pipe movement off line or grade. Plastic pipe shall be completely covered to prevent damage from ultraviolet light.

3.1.2.4 Width of Trench

If the maximum width of the trench at the top of the pipe, as specified in Section 02316 EXCAVATION, TRENCHING, AND BACKFILLING FOR UTILITIES SYSTEMS, is exceeded for any reason other than by direction, the Contractor shall install, at no additional cost to the Government, concrete cradling, pipe encasement, or other bedding required to support the added load of the backfill.

3.1.2.5 Jointing

Joints between different pipe materials shall be made as specified, using approved jointing materials.

3.1.2.6 Handling and Storage

Pipe, fittings and joint material shall be handled and stored in accordance with the manufacturer's recommendations. Storage facilities for plastic pipe, fittings, joint materials and solvents shall be classified and marked in accordance with NFPA 704, with classification as indicated in NFPA 49 and NFPA 325-1.

3.1.3 Leakage Tests

Lines shall be tested for leakage by low pressure air testing, infiltration tests or exfiltration tests, as appropriate. Low pressure air testing for vitrified clay pipes shall be as prescribed in ASTM C 828. Low pressure air testing for concrete pipes shall be as prescribed in ASTM C 828. Low pressure air testing for PVC pipe shall be as prescribed in UBPPA UNI-B-6. Low pressure air testing procedures for other pipe materials shall use the pressures and testing times prescribed in ASTM C 828 and ASTM C 924, after consultation with the pipe manufacturer. Prior to infiltration or exfiltration tests, the trench shall be backfilled up to at least the lower half of the pipe. If required, sufficient additional backfill shall be placed to prevent pipe movement during testing, leaving the joints uncovered to permit inspection. Visible leaks encountered shall be corrected regardless of leakage test results. When the water table is 2 feet or more above the top of the pipe at the upper end of the pipeline section to be tested, infiltration shall be measured using a suitable weir or other device acceptable to the Contracting Officer. When the Contracting Officer determines that infiltration cannot be properly tested, an exfiltration test shall be made by filling the line to be tested with water so that a head of at least 2 feet is provided above both the water table and the top of the pipe at the upper end of the pipeline to be tested. The filled line shall be allowed to stand until the pipe has reached its maximum absorption, but not less than 4 hours. After absorption, the head shall be re-established. The amount of water required to maintain this water level during a 2-hour test period shall be measured. Leakage as measured by either the infiltration test or exfiltration test

shall not exceed 25 gal per inch diameter per mile of pipeline per day. When leakage exceeds the maximum amount specified, satisfactory correction shall be made and retesting accomplished. Testing, correction, and retesting shall be made at no additional cost to the Government.

3.1.4 Test for Deflection

When flexible pipe is used, a deflection test shall be made on the entire length of the installed pipeline not less than 30 days after the completion of all work including the leakage test, backfill, and placement of any fill, grading, paving, concrete, or superimposed loads. Deflection shall be determined by use of a deflection device or by use of a spherical, spheroidal, or elliptical ball, a cylinder, or circular sections fused to a common shaft. The ball, cylinder, or circular sections shall have a diameter, or minor diameter as applicable, of 92.5 percent of the inside diameter of the pipe, but 95 percent for RPMP and RTRP. A tolerance of plus 0.5 percent will be permitted. The ball, cylinder, or circular sections shall be of a homogeneous material throughout, shall have a density greater than 1.0 as related to water at 39.2 degrees F, and shall have a surface brinell hardness of not less than 150. The device shall be center bored and through bolted with a 1/4 inch minimum diameter steel shaft having a yield strength of 70,000 psi or more, with eyes at each end for attaching pulling cables. The eye shall be suitably backed with flange or heavy washer; a pull exerted on the opposite end of the shaft shall produce compression throughout the remote end of the ball, cylinder or circular section. Circular sections shall be spaced so that the distance from the external faces of the front and back sections shall equal or exceed the diameter of the circular section. Failure of the ball, cylinder, or circular section to pass freely through a pipe run, either by being pulled through or by being flushed through with water, shall be cause for rejection of that run. When a deflection device is used for the test in lieu of the ball, cylinder, or circular sections described, such device shall be approved prior to use. The device shall be sensitive to 1.0 percent of the diameter of the pipe being measured and shall be accurate to 1.0 percent of the indicated dimension. Installed pipe showing deflections greater than 7.5 percent of the normal diameter of the pipe, or 5 percent for RTRP and RPMP, shall be retested by a run from the opposite direction. If the retest also fails, the suspect pipe shall be replaced at no cost to the Government.

3.2 CONCRETE CRADLE AND ENCASEMENT

The pipe shall be supported on a concrete cradle, or encased in concrete where indicated or directed.

3.3 INSTALLATION OF WYE BRANCHES

Wye branches shall be installed where sewer connections are indicated or where directed. Cutting into piping for connections shall not be done except in special approved cases. When the connecting pipe cannot be adequately supported on undisturbed earth or tamped backfill, the pipe shall be encased in concrete backfill or supported on a concrete cradle as directed. Concrete required because of conditions resulting from faulty construction methods or negligence by the Contractor shall be installed at no additional cost to the Government. The installation of wye branches in an existing sewer shall be made by a method which does not damage the integrity of the existing sewer. One acceptable method consists of removing one pipe section, breaking off the upper half of the bell of the next lower section and half of the running bell of wye section. After

placing the new section, it shall be rotated so that the broken half of the bell will be at the bottom. The two joints shall then be made with joint packing and cement mortar.

3.4 MANHOLE DETAILS

3.4.1 General Requirements

Manholes shall be constructed of cast-in-place concrete or precast concrete manhole sections. The invert channels shall be smooth and semicircular in shape conforming to the inside of the adjacent sewer section. Changes in direction of flow shall be made with a smooth curve of as large a radius as the size of the manhole will permit. Changes in size and grade of the channels shall be made gradually and evenly. The invert channels shall be formed directly in the concrete of the manhole base, or shall be built up with brick and mortar, or shall be half tile laid in concrete, or shall be constructed by laying full section sewer pipe through the manhole and breaking out the top half after the surrounding concrete has hardened. Pipe connections shall be made to manhole using water stops, standard O-ring joints, special manhole coupling, or shall be made in accordance with the manufacturer's recommendation. The Contractor's proposed method of connection, list of materials selected, and specials required, shall be approved prior to installation. The floor of the manhole outside the channels shall be smooth and shall slope toward the channels not less than 1 inch per foot nor more than 2 inches per foot. Free drop inside the manholes shall not exceed 18 inches, measured from the invert of the inlet pipe to the top of the floor of the manhole outside the channels; drop manholes shall be constructed whenever the free drop would otherwise be greater than 1 foot 6 inches.

3.4.2 Steel Ladder Anchorage

Ladder shall be adequately anchored to the wall by means of steel inserts spaced not more than 6 feet apart vertically, and shall be installed to provide at least 6 inches of space between the wall and the rungs. The wall along the line of the ladder shall be vertical for its entire length.

3.4.3 Jointing, Plastering and Sealing

Mortar joints shall be completely filled and shall be smooth and free from surplus mortar on the inside of the manhole. Mortar and mastic joints between precast rings shall be full-bedded in jointing compound and shall be smoothed to a uniform surface on both the interior and exterior of the manhole. Installation of rubber gasket joints between precast rings shall be in accordance with the recommendations of the manufacturer. Precast rings may also be sealed by the use of extruded rolls of rubber with mastic adhesive on one side.

3.4.4 Setting of Frames and Covers

Unless otherwise indicated, tops of frames and covers shall be set flush with finished grade in paved areas or 2 inches higher than finished grade in unpaved areas. Frame and cover assemblies shall be sealed to manhole sections using external preformed rubber joint seals that meet the requirements of ASTM D 412 and ASTM D 624, or other methods specified in paragraph Jointing, Plastering and Sealing, unless otherwise specified.

3.4.5 External Preformed Rubber Joint Seals

External preformed rubber joint seals and extruded rolls of rubber with mastic adhesive shall meet the requirements of ASTM D 412 and ASTM C 972 to ensure conformance with paragraph Leakage Tests. The seal shall be multi-section with neoprene rubber top section and all lower sections made of Ethylene Propylene Di Monomer (EPDM) rubber with a minimum thickness of 60 mils. Each unit shall consist of a top and a bottom section and shall have mastic on the bottom of the bottom section and mastic on the top and bottom of the top section. The mastic shall be non-hardening butyl rubber sealant and shall seal to the cone/top slab of the manhole/catch basin and over the lip of the casting. One unit shall seal a casting and up to six, 2 inch adjusting rings. The bottom section shall be 12 inches in height. A 6 inch high top section will cover up to two, 2 inch adjusting rings. A 12 inch high bottom section will cover up to six, 2 inch adjusting rings. Extension sections shall cover up to two more adjusting rings. Each extension shall overlap the bottom section by 2 inches and shall be overlapped by the top section by 2 inches.

3.5 CONNECTING TO EXISTING MANHOLES

Pipe connections to existing manholes shall be made so that finish work will conform as nearly as practicable to the applicable requirements specified for new manholes, including all necessary concrete work, cutting, and shaping. The connection shall be centered on the manhole. Holes for the new pipe shall be of sufficient diameter to allow packing cement mortar around the entire periphery of the pipe but no larger than 1.5 times the diameter of the pipe. Cutting the manhole shall be done in a manner that will cause the least damage to the walls.

3.6 BUILDING CONNECTIONS

Building connections shall include the lines to and connection with the building waste drainage piping at a point approximately 5 feet outside the building, unless otherwise indicated. Where building drain piping is not installed, the Contractor shall terminate the building connections approximately 5 feet from the site of the building at a point and in a manner designated.

3.7 CLEANOUTS AND OTHER APPURTENANCES

Cleanouts and other appurtenances shall be installed where shown on the drawings or as directed by the Contracting Officer, and shall conform to the detail of the drawings.

-- End of Section --

SECTION 02532

FORCE MAINS AND INVERTED SIPHONS; SEWER
07/98

PART 1 GENERAL

1.1 REFERENCES

The publications listed below form a part of this specification to the extent referenced. The publications are referred to in the text by basic designation only.

AMERICAN SOCIETY FOR TESTING AND MATERIALS (ASTM)

ASTM C 478	(1997) Precast Reinforced Concrete Manhole Sections
ASTM D 1785	(1999) Poly(Vinyl Chloride) (PVC) Plastic Pipe, Schedules 40, 80, and 120
ASTM D 2241	(1996b) Poly(Vinyl Chloride) (PVC) Pressure-Rated Pipe (SDR Series)
ASTM D 2464	(1999) Threaded Poly(Vinyl Chloride) (PVC) Plastic Pipe Fittings, Schedule 80
ASTM D 2564	(1996a) Solvent Cements for Poly(Vinyl Chloride) (PVC) Plastic Piping Systems
ASTM D 2657	(1997) Heat Fusion Joining Polyolefin Pipe and Fittings
ASTM D 2774	(1994) Underground Installation of Thermoplastic Pressure Piping
ASTM D 3035	(1995) Polyethylene (PE) Plastic Pipe (DR-PR) Based on Controlled Outside Diameter
ASTM D 3139	(1998) Joints for Plastic Pressure Pipes Using Flexible Elastomeric Seals
ASTM D 3308	(1997) PTFE Resin Skived Tape
ASTM D 3350	(1998a) Polyethylene Plastics Pipe and Fittings Materials
ASTM F 477	(1999) Elastomeric Seals (Gaskets) for Joining Plastic Pipe

ASME INTERNATIONAL (ASME)

ASME B16.1	(1998) Cast Iron Pipe Flanges and Flanged Fittings

AMERICAN WATER WORKS ASSOCIATION (AWWA)

AWWA C105	(1993) Polyethylene Encasement for Ductile-Iron Pipe Systems
AWWA C111	(1995) Rubber-Gasket Joints for Ductile-Iron Pressure Pipe and Fittings
AWWA C203	(1997) Coal-Tar Protective Coatings and Linings for Steel Water Pipelines - Enamel and Tape - Hot-Applied
AWWA C207	(1994) Steel Pipe Flanges for Waterworks Service - Sizes 4 In. Through 144 In. (100 mm through 3,600 mm)
AWWA C210	(1997) Liquid-Epoxy Coating Systems for the Interior and Exterior of Steel Water Pipelines
AWWA C500	(1993; C500a) Metal-Seated Gate Valves for Water Supply Service
AWWA C508	(1993; C508a) Swing-Check Valves for Waterworks Service, 2 In. (50 mm) Through 24 In. (600 mm) NPS
AWWA C600	(1993) Installation of Ductile-Iron Water Mains and Their Appurtenances

DUCTILE IRON PIPE RESEARCH ASSOCIATION (DIPRA)

DIPRA-Restraint Design	(1997) Thrust Restraint Design for Ductile Iron Pipe

1.2 SUBMITTALS

Government approval is required for submittals with a "G" designation; submittals not having a "G" designation are for information only. When used, a designation following the "G" designation identifies the office that will review the submittal for the Government. The following shall be submitted in accordance with Section 01330 SUBMITTAL PROCEDURES:

SD-06 Test Reports

Hydrostatic Tests

Copies of test results.

1.3 DELIVERY AND STORAGE

Pipe, fittings and accessories, and pipe coatings shall not be damaged during delivery, handling, and storage.

PART 2 PRODUCTS

2.1 PIPE AND FITTINGS

Piping for force mains less than 4 inches in diameter shall be polyvinyl

chloride (PVC) plastic or polyethylene (PE) plastic. Piping less than 4 inches in diameter inside pump stations shall be galvanized steel. Pipe shall conform to the respective specifications and other requirements specified below.

2.1.1 Plastic Pipe

2.1.1.1 PE Pipe

ASTM D 3350 and ASTM D 3035, minimum pressure rating of 100 psi at 73.4 degrees F.

2.1.1.2 PVC Pipe

a. PVC Pipe and Fittings Less Than 4 inches Diameter: ASTM D 1785, Schedule 80, or ASTM D 2241, SDR 21, with screw joints, push-on joints, or solvent weld joints.

2.2 JOINTS

2.2.1 PE Piping

a. Heat Fusion Joints: ASTM D 2657.

b. Flanged Joints: ASME B16.1 or AWWA C207.

c. Mechanical Joints: ASME B16.1.

2.2.2 PVC Piping

a. Screw Joint Fittings: ASTM D 2464, Schedule 80.

b. Push-On Joint Fittings: ASTM D 3139, with ASTM F 477 gaskets.

c. Solvent Cement: ASTM D 2564.

d. Couplings for use with plain end pipe shall have centering rings or stops to ensure the coupling is centered on the joint.

2.3 VALVES

2.3.1 Gate Valves

Gate valves 3 inches and larger shall comply with AWWA C500. Valves for buried service shall be non-rising stem (NRS), 2 inch square nut operated with joints applicable to the pipe or installation. Buried valves shall be furnished with extension stems comprising socket, extension stem and operating nut, and shall be of an appropriate length to bring operating nut to within 6 inches of grade. One 4 foot "T" handle valve wrench shall be furnished for each quantity of 6 buried valves. Gate valves that are exposed or installed inside shall be outside screw and yoke (OS&Y), handwheel operated with flange ends unless otherwise indicated. Gate valve operating nuts and handwheels shall have an arrow and the word "OPEN" cast in raised letters to indicate the direction of opening. Gate valves 14 inches and larger shall be equipped with gearing to reduce operating effort. Gate valves 14 inches and larger installed in horizontal lines in horizontal position with stems horizontal shall be equipped with bronze track, roller and scrapers to support the weight of the gate for its full length of travel. Gate valves 14 inches and larger installed in vertical

pipe lines with stems horizontal shall be fitted with slides to assist the travel of the gate assembly.

2.3.2 Check Valves

Check valves shall permit free flow of sewage forward and provide a positive check against backflow. Check valves shall be designed for a minimum working pressure of 150 psi or as indicated. The body shall be iron. The manufacturer's name, initials, or trademark and also the size of the valve, working pressure, and direction of flow shall be directly cast on the body.

a. Ball Check Valves shall be iron body, shall have flanged ends, and shall be the non-slam type. Flanges shall be the 125 pound type complying with ASME B16.1. Ball shall be stainless steel unless otherwise specified.

b. Swing Check Valves shall comply with AWWA C508 and shall be iron body, bronze mounted, and shall have flanged ends. Flanges shall be the 125 pound type complying with ASME B16.1.

2.3.3 Air Release Valves

Air release valves shall be designed to permit release of air from an empty pipe during filling and shall be capable of discharging accumulated air in the line while the line is in operation and under pressure. Valves shall be attached by means of threaded pipe connections. Valves shall be vented to the atmosphere.

a. Manual Air Release Valves: Manual air release valves shall consist of a 3 inch gate valve and 3 inch ductile iron pipe and fittings. The valve shall be installed with its line of flow in the horizontal position.

b. Automatic Air Release Valve: Automatic air release valves shall be of the compound lever type capable of withstanding operating pressures of 150 psi. The valves shall have a 1/2 inch outlet. The body and cover of the valve shall be of iron with a stainless steel float. All internal parts shall be stainless steel or bronze. The valve shall be specifically adapted for use with sewage. Each valve shall be complete with hose and blow-off valves to permit backflushing without dismantling the valve.

2.4 VALVE BOXES

Valve boxes shall be cast iron or concrete, except that concrete boxes may be installed only in locations not subject to vehicular traffic. Cast iron boxes shall be the extension type with slide type adjustment and with flared base. The minimum thickness of metal shall be 3/16 inch. The box length shall be adaptable, without full extension, to the depth of cover over the pipe at the valve locations. Concrete boxes shall be the standard product of a manufacturer of precast concrete equipment. The word "SEWER" shall be cast in the cover.

2.5 VALVE VAULTS

Valve vaults shall be precast concrete units conforming to ASTM C 478.

2.6 MISCELLANEOUS MATERIALS

Miscellaneous materials shall comply with the following requirements:

2.6.1 Pipe Coatings and Linings

a. Steel, interior: AWWA C203 or AWWA C210.

b. Steel, exterior, buried: AWWA C203.

c. Steel, exterior, exposed: AWWA C210.

2.6.2 Joint Lubricants

Joint lubricants shall be as recommended by the pipe manufacturer.

2.6.3 Bolts, Nuts and Glands

AWWA C111.

2.6.4 Joint Compound

A stiff mixture of graphite and oil or inert filler and oil.

2.6.5 Joint Tape

ASTM D 3308.

2.6.6 Bond Wire

Bond wire type RHW or USE, Size 1/0 AWG, neoprene jacketed copper conductor shaped to stand clear of the joint.

PART 3 EXECUTION

3.1 INSTALLATION

Pipe, pipe fittings, and appurtenances shall be installed at the locations indicated. Excavation, trenching, and backfilling shall be as specified in Section 02316 EXCAVATION, TRENCHING AND BACKFILLING FOR UTILITIES SYSTEMS.

3.1.1 Adjacent Facilities

Installation of force mains and inverted siphons near adjacent facilities shall be as specified in Section 02531 SANITARY SEWERS.

3.1.2 Cutting

Pipe shall be cut in a neat manner with mechanical cutters. Wheel cutters shall be used where practicable. Sharp and rough edges shall be ground smooth and loose material removed from the pipe before laying.

3.1.3 Laying

Except where otherwise authorized, pipe shall be laid with bells facing the direction of laying. Before lowering and while suspended, the pipe shall be inspected for defects. Defective material shall be rejected. Pipe shall be laid in compliance with the following:

a. Polyvinyl Chloride: Manufacturer's instructions.

b. Polyethylene: ASTM D 2774.

3.1.4 Jointing

3.1.4.1 Joints for PE Pipe

Heat fusion joints shall comply with the manufacturer's instructions concerning equipment, temperature, melt time, heat coat, and joining time. Flanged and mechanical joints shall be made in compliance with the manufacturer's instructions.

3.1.4.2 Joints for PVC Pipe

a. Threaded joints shall be made by wrapping the male threads with joint tape or by applying an approved thread lubricant, then threading the joining members together. The joint shall be tightened with strap wrenches which will not damage the pipe and fittings. The joint shall be tightened no more than 2 threads past hand-tight.

b. Push-on joints: The ends of pipe for push-on joints shall be beveled to facilitate assembly. Pipe shall be marked to indicate when the pipe is fully seated. The gasket shall be lubricated to prevent displacement. The gasket shall remain in proper position in the bell or coupling while the joint is made.

c. Solvent-weld joints shall comply with the manufacturer's instructions.

3.1.4.3 Joints for Ductile Iron Pipe

Installation of mechanical and push-on type joints shall comply with AWWA C600 and the manufacturer's instructions. Installation of flanged joints shall comply with manufacturer's instructions.

3.1.5 PE Pipe Encasement

Encasement shall be provided for all ductile iron pipe, fittings, and valves in accordance with AWWA C105.

3.1.6 Installation of Valves

Prior to installation, valves shall be cleaned of all foreign matter and inspected for damage. Valves shall be fully opened and closed to ensure that all parts are properly operating. Valves shall be installed with the stem in the vertical position. Valves shall be installed in valve vaults as indicated.

3.1.7 Installation of Valve Boxes

Valve boxes shall be installed over each outside gate valve, unless otherwise indicated. Valve boxes shall be centered over the valve. Fill shall be carefully tamped around each valve box to a distance of 4 feet on all sides or to undisturbed trench face, if less than 4 feet.

3.1.8 Installation of Valve Vaults

Valve vaults shall be installed as indicated.

3.1.9 Drain Lines

Drain lines shall be installed where indicated. The drain line shall consist of a tee in the main line with a 4 inch diameter branch, a 4 inch diameter elbow, and a 4 inch gate valve.

3.1.10 Thrust Restraint

Thrust Restraint shall be as specified in Section 02510 WATER DISTRIBUTION SYSTEM. Plugs, caps, tees and bends deflecting 11-1/4 degrees or more, either vertically or horizontally, shall be provided with thrust restraint. Valves shall be securely anchored or shall be provided with thrust restraints to prevent movement. Thrust restraints shall be either thrust blocks or, for ductile-iron pipes, restrained joints.

3.1.10.1 Thrust Blocks

Thrust blocking shall be concrete of a mix not leaner than: 1 cement, 2-1/2 sand, 5 gravel; and having a compressive strength of not less than 2000 psi after 28 days. Blocking shall be placed between solid ground and the fitting to be anchored. Unless otherwise indicated or directed, the base and thrust bearing sides of thrust blocks shall be poured directly against undisturbed earth. The sides of thrust blocks not subject to thrust may be poured against forms. The area of bearing shall be as shown or as directed. Blocking shall be placed so that the fitting joints will be accessible for repair. Steel rods and clamps, protected by galvanizing or by coating with bituminous paint, shall be used to anchor vertical down bends into gravity thrust blocks.

3.1.10.2 Restrained Joints

For ductile iron pipe, restrained joints shall be designed by the Contractor or the pipe manufacturer in accordance with DIPRA-Restraint Design.

3.1.11 Grout

Grout for exterior joint protection on concrete pipes shall be a mix of 1 part portland cement, 2 parts sand, and of sufficient liquid consistency to flow into the joint recess beneath the diaper. Grout for interior joint protection shall be a mix of 1 part portland cement and 1 part sand. A polyurethane foam loop, impregnated with portland cement, may be substituted for grout for exterior joints.

3.1.12 Bonded Joints

Where indicated, a metallic bond shall be provided at each joint, including joints made with flexible couplings or rubber gaskets, of ferrous-metallic piping to effect continuous conductivity. The bond shall be of the thermal-weld type.

3.2 HYDROSTATIC TESTS

The pipeline shall be subjected to both a pressure test and a leakage test. The method proposed for disposal of waste water from hydrostatic tests shall be approved by the Contracting Officer. Testing shall be the responsibility of the Contractor. Testing shall be performed by an approved independent testing laboratory or by the Contractor subject to

approval. The test may be witnessed by the Contracting Officer. The Contracting Officer shall be notified at least 7 days in advance of equipment tests. The final test report shall be delivered to the Contracting Officer within 30 days of the test.

3.2.1 Pressure Test

After the pipe has been installed, joints completed, thrust blocks have been in place for at least five days, and the trench has been partially backfilled, leaving the joints exposed for examination, the pipe shall be filled with water to expel all air. The pipeline shall be subjected to a test pressure of 100 psi or 150 percent of the working pressure, whichever is greater, for a period of at least one hour. Each valve shall be opened and closed several times during the test. The exposed pipe, joints, fitting, and valves shall be examined for leaks. Visible leaks shall be stopped or the defective pipe, fitting, joints, or valve shall be replaced.

3.2.2 Leakage Test

The leakage test may be conducted subsequent to or concurrently with the pressure test. The amount of water permitted as leakage for the line shall be placed in a sealed container attached to the supply side of the test pump. No other source of supply will be permitted to be applied to the pump or line under test. The water shall be pumped into the line by the test pump as required to maintain the specified test pressure as described for pressure test for a 2 hour period. Exhaustion of the supply or the inability to maintain the required pressure will be considered test failure. PE pipe can experience diametric expansion and pressure elongation during initial testing. The manufacturer shall be consulted prior to testing for special testing considerations. Allowable leakage shall be determined by the following I-P formula:

$L = NDP/K$ Where:

L = Allowable leakage in gallons per hour.

N = Number of joints in length of pipeline tested.

D = Nominal diameter of the pipe in inches.

P = Square root of the test pressure in psig.

K = 7400 for pipe materials.

At the conclusion of the test, the amount of water remaining in the container shall be measured and the results recorded in the test report.

3.2.3 Retesting

If any deficiencies are revealed during any test, such deficiencies shall be corrected and the tests shall be reconducted until the results of the tests are within specified allowances, without additional cost to the Government.

-- End of Section --

SECTION 02630

STORM-DRAINAGE SYSTEM
03/00

PART 1 GENERAL

1.1 REFERENCES

The publications listed below form a part of this specification to the extent referenced. The publications are referred to in the text by basic designation only.

AMERICAN ASSOCIATION OF STATE HIGHWAY AND TRANSPORTATION OFFICIALS (AASHTO)

AASHTO M 198	(1998) Joints for Circular Concrete Sewer and Culvert Pipe Using Flexible Watertight Gaskets

AMERICAN RAILWAY ENGINEERING & MAINTENANCE-OF-WAY ASSOCIATION (AREMA)

AREMA Manual	(1999) Manual for Railway Engineering (4 Vol.)

AMERICAN SOCIETY FOR TESTING AND MATERIALS (ASTM)

ASTM A 48	(1994a) Gray Iron Castings
ASTM A 123/A 123M	(1997ael) Zinc (Hot-Dip Galvanized) Coatings on Iron and Steel Products
ASTM A 536	(1999el) Ductile Iron Castings
ASTM A 929/A 929M	(1997) Steel Sheet, Metallic-Coated by the Hot-Dip Process for Corrugated Steel Pipe
ASTM B 26/B 26M	(1998) Aluminum-Alloy Sand Castings
ASTM C 76	(1999) Reinforced Concrete Culvert, Storm Drain, and Sewer Pipe
ASTM C 231	(1997el) Air Content of Freshly Mixed Concrete by the Pressure Method
ASTM C 270	(1997) Mortar for Unit Masonry
ASTM C 425	(1998b) Compression Joints for Vitrified Clay Pipe and Fittings
ASTM C 443	(1998) Joints for Circular Concrete Sewer and Culvert Pipe, Using Rubber Gaskets
ASTM C 478	(1997) Precast Reinforced Concrete Manhole Sections

ASTM C 789	(1998) Precast Reinforced Concrete Box Sections for Culverts, Storm Drains, and Sewers
ASTM C 850	(1998) Precast Reinforced Concrete Box Sections for Culverts, Storm Drains, and Sewers with Less Than 2 Ft. of Cover Subjected to Highway Loadings
ASTM C 877	(1994) External Sealing Bands for Noncircular Concrete Sewer, Storm Drain, and Culvert Pipe
ASTM C 923	(1998) Resilient Connectors Between Reinforced Concrete Manhole Structures, Pipes and Materials
ASTM C 924	(1998) Concrete Pipe Sewer Lines by Low-Pressure Air Test Method
ASTM C 1103	(1994) Joint Acceptance Testing of Installed Precast Concrete Pipe Sewer Lines
ASTM D 1056	(1998) Flexible Cellular Materials - Sponge or Expanded Rubber
ASTM D 1171	(1994) Rubber Deterioration - Surface Ozone Cracking Outdoors or Chamber (Triangular Specimens)
ASTM D 1557	(1998) Laboratory Compaction Characteristics of Soil Using Modified Effort (56,000 ft-lbf/cu. ft. (2,700 kN-m/cu.m.))
ASTM D 1751	(1999) Preformed Expansion Joint Filler for Concrete Paving and Structural Construction (Nonextruding and Resilient Bituminous Types)
ASTM D 1752	(1984; R 1996el) Preformed Sponge Rubber and Cork Expansion Joint Fillers for Concrete Paving and Structural Construction
ASTM D 2167	(1994) Density and Unit Weight of Soil in Place by the Rubber Balloon Method
ASTM D 2321	(1989; R 1995) Underground Installation of Thermoplastic Pipe for Sewers and Other Gravity-Flow Applications
ASTM D 2922	(1996el) Density of Soil and Soil-Aggregate in Place by Nuclear Methods (Shallow Depth)
ASTM D 3017	(1988; R 1996el) Water Content of Soil and Rock in Place by Nuclear Methods (Shallow Depth)

ASTM D 3212	(1996a) Joints for Drain and Sewer Plastic Pipes Using Flexible Elastomeric Seals
ASTM D 3350	(1998a) Polyethylene Plastics Pipe and Fittings Materials
ASTM F 894	(1998a) Polyethylene (PE) Large Diameter Profile Wall Sewer and Drain Pipe
ASTM F 1417	(1992; R 1998) Installation Acceptance of Plastic Gravity Sewer Lines Using Low-Pressure Air

1.2 SUBMITTALS

Government approval is required for submittals with a "G" designation; submittals not having a "G" designation are for information only. When used, a designation following the "G" designation identifies the office that will review the submittal for the Government. The following shall be submitted in accordance with Section 01330 SUBMITTAL PROCEDURES:

SD-03 Product Data

Placing Pipe

Printed copies of the manufacturer's recommendations for installation procedures of the material being placed, prior to installation.

SD-04 Samples

Pipe for Culverts and Storm Drains

Printed copies of the manufacturer's recommendations for installation procedures of the material being placed, prior to installation.

SD-07 Certificates

Resin Certification
Pipeline Testing
Hydrostatic Test on Watertight Joints
Determination of Density
Frame and Cover for Gratings; G

Certified copies of test reports demonstrating conformance to applicable pipe specifications, before pipe is installed. Certification on the ability of frame and cover or gratings to carry the imposed live load.

1.3 DELIVERY, STORAGE, AND HANDLING

1.3.1 Delivery and Storage

Materials delivered to site shall be inspected for damage, unloaded, and stored with a minimum of handling. Materials shall not be stored directly on the ground. The inside of pipes and fittings shall be kept free of dirt and debris. Before, during, and after installation, plastic pipe and

fittings shall be protected from any environment that would result in damage or deterioration to the material. The Contractor shall have a copy of the manufacturer's instructions available at the construction site at all times and shall follow these instructions unless directed otherwise by the Contracting Officer. Solvents, solvent compounds, lubricants, elastomeric gaskets, and any similar materials required to install plastic pipe shall be stored in accordance with the manufacturer's recommendations and shall be discarded if the storage period exceeds the recommended shelf life. Solvents in use shall be discarded when the recommended pot life is exceeded.

1.3.2 Handling

Materials shall be handled in a manner that ensures delivery to the trench in sound, undamaged condition. Pipe shall be carried to the trench, not dragged.

PART 2 PRODUCTS

2.1 PIPE FOR CULVERTS AND STORM DRAINS

Pipe for culverts and storm drains shall be of the sizes indicated and shall conform to the requirements specified.

2.1.1 Concrete Pipe

ASTM C 76, Class III, or unless rated otherwise on the drawings as Class V.

2.1.2 PE Pipe

The pipe manufacturer's resin certification indicating the cell classification of PE used to manufacture the pipe shall be submitted prior to installation of the pipe. The minimum cell classification for polyethylene plastic shall apply to each of the seven primary properties of the cell classification limits in accordance with ASTM D 3350.

2.1.2.1 High Density PE Pipe (HDPE)

ASTM F 894, Class 63, produced from PE certified by the resin producer as meeting the requirements of ASTM D 3350, minimum cell class 334433C. Pipe walls shall have the following properties:

		Minimum Moment Of Inertia of Wall Section (in to the 4th/in)	
Nominal Size (in.)	Minimum Wall Area (square in/ft)	Cell Class 334433C	Cell Class 335434C
18	2.96	0.052	0.038
21	4.15	0.070	0.051
24	4.66	0.081	0.059
27	5.91	0.125	0.091
30	5.91	0.125	0.091
33	6.99	0.161	0.132

Nominal Size (in.)	Minimum Wall Area (square in/ft)	Minimum Moment Of Inertia of Wall Section (in to the 4th/in) Cell Class 334433C	Cell Class 335434C
36	8.08	0.202	0.165
42	7.81	0.277	0.227
48	8.82	0.338	0.277

2.2 DRAINAGE STRUCTURES

2.2.1 Flared End Sections

Sections shall be of a standard design fabricated from zinc coated steel sheets meeting requirements of ASTM A 929/A 929M.

2.2.2 Precast Reinforced Concrete Box

For highway loadings with 2 feet of cover or more or subjected to dead load only, ASTM C 789; for less than 2 feet of cover subjected to highway loading, ASTM C 850.

2.3 MISCELLANEOUS MATERIALS

2.3.1 Concrete

Unless otherwise specified, concrete and reinforced concrete shall conform to the requirements for concrete under Section 03300 CAST-IN-PLACE STRUCTURAL CONCRETE. The concrete mixture shall have air content by volume of concrete, based on measurements made immediately after discharge from the mixer, of 5 to 7 percent when maximum size of coarse aggregate exceeds 1-1/2 inches. Air content shall be determined in accordance with ASTM C 231. The concrete covering over steel reinforcing shall not be less than 1 inch thick for covers and not less than 1-1/2 inches thick for walls and flooring. Concrete covering deposited directly against the ground shall have a thickness of at least 3 inches between steel and ground. Expansion-joint filler material shall conform to ASTM D 1751, or ASTM D 1752, or shall be resin-impregnated fiberboard conforming to the physical requirements of ASTM D 1752.

2.3.2 Mortar

Mortar for pipe joints, connections to other drainage structures, and brick or block construction shall conform to ASTM C 270, Type M, except that the maximum placement time shall be 1 hour. The quantity of water in the mixture shall be sufficient to produce a stiff workable mortar. Water shall be clean and free of harmful acids, alkalies, and organic impurities. The mortar shall be used within 30 minutes after the ingredients are mixed with water. The inside of the joint shall be wiped clean and finished smooth. The mortar head on the outside shall be protected from air and sun with a proper covering until satisfactorily cured.

2.3.3 Precast Reinforced Concrete Manholes

Precast reinforced concrete manholes shall conform to ASTM C 478. Joints between precast concrete risers and tops shall be full-bedded in cement mortar and shall be smoothed to a uniform surface on both interior and exterior of the structure or made with flexible, watertight, rubber type gaskets meeting the requirements of paragraph JOINTS.

2.3.4 Frame and Cover for Gratings

Frame and cover for gratings shall be cast gray iron, ASTM A 48, Class 35B; cast ductile iron, ASTM A 536, Grade 65-45-12; or cast aluminum, ASTM B 26/B 26M, Alloy 356.OT6. Weight, shape, size, and waterway openings for grates and curb inlets shall be as indicated on the plans.

2.3.5 Joints

2.3.5.1 Flexible Watertight Joints

a. Materials: Flexible watertight joints shall be made with plastic or rubber-type gaskets for concrete pipe and with factory-fabricated resilient materials for clay pipe. The design of joints and the physical requirements for plastic gaskets shall conform to AASHTO M 198, and rubber-type gaskets shall conform to ASTM C 443. Factory-fabricated resilient joint materials shall conform to ASTM C 425. Gaskets shall have not more than one factory-fabricated splice, except that two factory-fabricated splices of the rubber-type gasket are permitted if the nominal diameter of the pipe being gasketed exceeds 54 inches.

b. Test Requirements: Watertight joints shall be tested and shall meet test requirements of paragraph HYDROSTATIC TEST ON WATERTIGHT JOINTS. Rubber gaskets shall comply with the oil resistant gasket requirements of ASTM C 443. Certified copies of test results shall be delivered to the Contracting Officer before gaskets or jointing materials are installed. Alternate types of watertight joint may be furnished, if specifically approved.

2.3.5.2 External Sealing Bands

Requirements for external sealing bands shall conform to ASTM C 877.

2.3.5.3 Flexible Watertight, Gasketed Joints

a. Gaskets: When infiltration or exfiltration is a concern for pipe lines, the couplings may be required to have gaskets. The closed-cell expanded rubber gaskets shall be a continuous band approximately 7 inches wide and approximately 3/8 inch thick, meeting the requirements of ASTM D 1056, Type 2 A1, and shall have a quality retention rating of not less than 70 percent when tested for weather resistance by ozone chamber exposure, Method B of ASTM D 1171. Rubber O-ring gaskets shall be 13/16 inch in diameter for pipe diameters of 36 inches or smaller and 7/8 inch in diameter for larger pipe having 1/2 inch deep end corrugation. Rubber O-ring gaskets shall be 1-3/8 inches in diameter for pipe having 1 inch deep end corrugations. O-rings shall meet the requirements of AASHTO M 198 or ASTM C 443. Flexible plastic gaskets shall conform to requirements of AASHTO M 198, Type B.

b. Connecting Bands: Connecting bands shall be of the type, size and

sheet thickness of band, and the size of angles, bolts, rods and lugs as indicated or where not indicated as specified in the applicable standards or specifications for the pipe. Exterior rivet heads in the longitudinal seam under the connecting band shall be countersunk or the rivets shall be omitted and the seam welded. Watertight joints shall be tested and shall meet the test requirements of paragraph HYDROSTATIC TEST ON WATERTIGHT JOINTS.

2.3.5.4 High Density PE Plastic Pipe

Joints shall be gasketed or thermal weld type with integral bell in accordance with ASTM F 894.

2.4 STEEL LADDER

Steel ladder shall be provided where the depth of the manhole exceeds 8 feet. These ladders shall be not less than 16 inches in width, with 3/4 inch diameter rungs spaced 12 inches apart. The two stringers shall be a minimum 3/8 inch thick and 2-1/2 inches wide. Ladders and inserts shall be galvanized after fabrication in conformance with ASTM A 123/A 123M.

2.5 DOWNSPOUT BOOTS

Boots used to connect exterior downspouts to the storm-drainage system shall be of gray cast iron conforming to ASTM A 48, Class 30B or 35B. Shape and size shall be as indicated.

2.6 RESILIENT CONNECTORS

Flexible, watertight connectors used for connecting pipe to manholes and inlets shall conform to ASTM C 923.

2.7 HYDROSTATIC TEST ON WATERTIGHT JOINTS

2.7.1 Concrete and Plastic Pipe

A hydrostatic test shall be made on the watertight joint types as proposed. Only one sample joint of each type needs testing; however, if the sample joint fails because of faulty design or workmanship, an additional sample joint may be tested. During the test period, gaskets or other jointing material shall be protected from extreme temperatures which might adversely affect the performance of such materials. Performance requirements for joints in reinforced and nonreinforced concrete pipe shall conform to AASHTO M 198 or ASTM C 443. Test requirements for joints in clay pipe shall conform to ASTM C 425. Test requirements for joints in PVC and PE plastic pipe shall conform to ASTM D 3212.

PART 3 EXECUTION

3.1 EXCAVATION FOR PIPE CULVERTS, STORM DRAINS, AND DRAINAGE STRUCTURES

Excavation of trenches, and for appurtenances and backfilling for culverts and storm drains, shall be in accordance with the applicable portions of Section 02316 "Excavation, Trenching, and Backfilling for Utilities Systems", Section 02300 "Earthwork" and the requirements specified below.

3.1.1 Trenching

The width of trenches at any point below the top of the pipe shall be not

greater than the outside diameter of the pipe plus 24 inches to permit satisfactory jointing and thorough tamping of the bedding material under and around the pipe. Sheeting and bracing, where required, shall be placed within the trench width as specified. Contractor shall not overexcavate. Where trench widths are exceeded, redesign with a resultant increase in cost of stronger pipe or special installation procedures will be necessary. Cost of this redesign and increased cost of pipe or installation shall be borne by the Contractor without additional cost to the Government.

3.1.2 Removal of Unstable Material

Where wet or otherwise unstable soil incapable of properly supporting the pipe, as determined by the Contracting Officer, is unexpectedly encountered in the bottom of a trench, such material shall be removed to the depth required and replaced to the proper grade with select granular material, compacted as provided in paragraph BACKFILLING. When removal of unstable material is due to the fault or neglect of the Contractor in his performance of shoring and sheeting, water removal, or other specified requirements, such removal and replacement shall be performed at no additional cost to the government.

3.2 BEDDING

The bedding surface for the pipe shall provide a firm foundation of uniform density throughout the entire length of the pipe, bedding Class B unless noted otherwise.

3.2.1 Concrete Pipe Requirements

When no bedding class is specified or detailed on the drawings, concrete pipe shall be bedded in a soil foundation accurately shaped and rounded to conform to the lowest one-fourth of the outside portion of circular pipe or to the lower curved portion of pipe arch for the entire length of the pipe or pipe arch. When necessary, the bedding shall be tamped. Bell holes and depressions for joints shall be not more than the length, depth, and width required for properly making the particular type of joint.

3.2.2 Plastic Pipe

Bedding for PVC and PE pipe shall meet the requirements of ASTM D 2321. Bedding, haunching, and initial backfill shall be either Class IB or II material.

3.3 PLACING PIPE

Each pipe shall be thoroughly examined before being laid; defective or damaged pipe shall not be used. Plastic pipe shall be protected from exposure to direct sunlight prior to laying, if necessary to maintain adequate pipe stiffness and meet installation deflection requirements. Pipelines shall be laid to the grades and alignment indicated. Proper facilities shall be provided for lowering sections of pipe into trenches. Lifting lugs in vertically elongated metal pipe shall be placed in the same vertical plane as the major axis of the pipe. Pipe shall not be laid in water, and pipe shall not be laid when trench conditions or weather are unsuitable for such work. Diversion of drainage or dewatering of trenches during construction shall be provided as necessary. Deflection of installed flexible pipe shall not exceed the following limits:

TYPE OF PIPE	MAXIMUM ALLOWABLE DEFLECTION (%)
Plastic	7.5

Not less than 30 days after the completion of backfilling, the Government may perform a deflection test on the entire length of installed flexible pipe using a mandrel or other suitable device. Installed flexible pipe showing deflections greater than those indicated above shall be retested by a run from the opposite direction. If the retest also fails, the suspect pipe shall be replaced at no cost to the Government.

3.3.1 Concrete and Plastic Pipe

Laying shall proceed upgrade with spigot ends of bell-and-spigot pipe and tongue ends of tongue-and-groove pipe pointing in the direction of the flow.

3.3.2 Multiple Culverts

Where multiple lines of pipe are installed, adjacent sides of pipe shall be at least half the nominal pipe diameter or 3 feet apart, whichever is less.

3.3.3 Jacking Pipe Through Fills

Methods of operation and installation for jacking pipe through fills shall conform to requirements specified in Volume 1, Chapter 1, Part 4 of AREMA Manual.

3.4 JOINTING

3.4.1 Concrete Pipe

3.4.1.1 Cement-Mortar Tongue-and-Groove Joint

The first pipe shall be bedded carefully to the established gradeline with the groove upstream. A shallow excavation shall be made underneath the pipe at the joint and filled with mortar to provide a bed for the pipe. The grooved end of the first pipe shall be thoroughly cleaned with a wet brush, and a layer of soft mortar applied to the lower half of the groove. The tongue of the second pipe shall be cleaned with a wet brush; while in horizontal position, a layer of soft mortar shall be applied to the upper half of the tongue. The tongue end of the second pipe shall be inserted in the grooved end of the first pipe until mortar is squeezed out on interior and exterior surfaces. Sufficient mortar shall be used to fill the joint completely and to form a bead on the outside.

3.4.1.2 Flexible Watertight Joints

Gaskets and jointing materials shall be as recommended by the particular manufacturer in regard to use of lubricants, cements, adhesives, and other special installation requirements. Surfaces to receive lubricants, cements, or adhesives shall be clean and dry. Gaskets and jointing materials shall be affixed to the pipe not more than 24 hours prior to the installation of the pipe, and shall be protected from the sun, blowing dust, and other deleterious agents at all times. Gaskets and jointing materials shall be inspected before installing the pipe; any loose or improperly affixed gaskets and jointing materials shall be removed and replaced. The pipe shall be aligned with the previously installed pipe,

and the joint pushed home. If, while the joint is being made the gasket becomes visibly dislocated the pipe shall be removed and the joint remade.

3.4.1.3 External Sealing Band Joint for Noncircular Pipe

Surfaces to receive sealing bands shall be dry and clean. Bands shall be installed in accordance with manufacturer's recommendations.

3.5 DRAINAGE STRUCTURES

3.5.1 Manholes and Inlets

Construction shall be of reinforced concrete, plain concrete, brick, precast reinforced concrete, precast concrete segmental blocks, prefabricated corrugated metal, or bituminous coated corrugated metal; complete with frames and covers or gratings; and with fixed galvanized steel ladders where indicated. Pipe studs and junction chambers of prefabricated corrugated metal manholes shall be fully bituminous-coated and paved when the connecting branch lines are so treated. Pipe connections to concrete manholes and inlets shall be made with flexible, watertight connectors where elevations allow for installations. Drainage inlets shall have weep holes covered with geotextile fabric and aggregate to drain paved areas until base course and pavement are installed.

3.5.2 Walls and Headwalls

Construction shall be as indicated.

3.6 STEEL LADDER INSTALLATION

Ladder shall be adequately anchored to the wall by means of steel inserts spaced not more than 6 feet vertically, and shall be installed to provide at least 6 inches of space between the wall and the rungs. The wall along the line of the ladder shall be vertical for its entire length.

3.7 BACKFILLING

3.7.1 Backfilling Pipe in Trenches

After the pipe has been properly bedded, selected material from excavation or borrow, at a moisture content that will facilitate compaction, shall be placed along both sides of pipe in layers not exceeding 6 inches in compacted depth. The backfill shall be brought up evenly on both sides of pipe for the full length of pipe. The fill shall be thoroughly compacted under the haunches of the pipe. Each layer shall be thoroughly compacted with mechanical tampers or rammers. This method of filling and compacting shall continue until the fill has reached an elevation of at least 12 inches above the top of the pipe. The remainder of the trench shall be backfilled and compacted by spreading and rolling or compacted by mechanical rammers or tampers in layers not exceeding 8 inches. Tests for density shall be made as necessary to ensure conformance to the compaction requirements specified below. Where it is necessary, in the opinion of the Contracting Officer, that sheeting or portions of bracing used be left in place, the contract will be adjusted accordingly. Untreated sheeting shall not be left in place beneath structures or pavements.

3.7.2 Backfilling Pipe in Fill Sections

For pipe placed in fill sections, backfill material and the placement and

compaction procedures shall be as specified below. The fill material shall be uniformly spread in layers longitudinally on both sides of the pipe, not exceeding 6 inches in compacted depth, and shall be compacted by rolling parallel with pipe or by mechanical tamping or ramming. Prior to commencing normal filling operations, the crown width of the fill at a height of 12 inches above the top of the pipe shall extend a distance of not less than twice the outside pipe diameter on each side of the pipe or 12 feet, whichever is less. After the backfill has reached at least 12 inches above the top of the pipe, the remainder of the fill shall be placed and thoroughly compacted in layers not exceeding 8 inches.

3.7.3 Movement of Construction Machinery

When compacting by rolling or operating heavy equipment parallel with the pipe, displacement of or injury to the pipe shall be avoided. Movement of construction machinery over a culvert or storm drain at any stage of construction shall be at the Contractor's risk. Any damaged pipe shall be repaired or replaced.

3.7.4 Compaction

3.7.4.1 General Requirements

Cohesionless materials include gravels, gravel-sand mixtures, sands, and gravelly sands. Cohesive materials include clayey and silty gravels, gravel-silt mixtures, clayey and silty sands, sand-clay mixtures, clays, silts, and very fine sands. When results of compaction tests for moisture-density relations are recorded on graphs, cohesionless soils will show straight lines or reverse-shaped moisture-density curves, and cohesive soils will show normal moisture-density curves.

3.7.4.2 Minimum Density

Backfill over and around the pipe and backfill around and adjacent to drainage structures shall be compacted at the approved moisture content to the following applicable minimum density, which will be determined as specified below.

a. Under airfield and heliport pavements, paved roads, streets, parking areas, and similar-use pavements including adjacent shoulder areas, the density shall be not less than 90 percent of maximum density for cohesive material and 95 percent of maximum density for cohesionless material, up to the elevation where requirements for pavement subgrade materials and compaction shall control.

b. Under unpaved or turfed traffic areas, density shall not be less than 85 percent of maximum density for cohesive material and 90 percent of maximum density for cohesionless material.

c. Under nontraffic areas, density shall be not less than that of the surrounding material.

3.7.5 Determination of Density

Testing shall be the responsibility of the Contractor and performed at no additional cost to the Government. Testing shall be performed by an approved commercial testing laboratory or by the Contractor subject to approval. Tests shall be performed in sufficient number to ensure that

specified density is being obtained. Laboratory tests for moisture-density relations shall be made in accordance with ASTM D 1557 except that mechanical tampers may be used provided the results are correlated with those obtained with the specified hand tamper. Field density tests shall be determined in accordance with ASTM D 2167 or ASTM D 2922. When ASTM D 2922 is used, the calibration curves shall be checked and adjusted, if necessary, using the sand cone method as described in paragraph Calibration of the referenced publications. ASTM D 2922 results in a wet unit weight of soil and when using this method ASTM D 3017 shall be used to determine the moisture content of the soil. The calibration curves furnished with the moisture gauges shall be checked along with density calibration checks as described in ASTM D 3017 or ASTM D 2922. Test results shall be furnished the Contracting Officer. The calibration checks of both the density and moisture gauges shall be made at the beginning of a job on each different type of material encountered and at intervals as directed.

3.8 PIPELINE TESTING

Lines shall be tested for leakage by low pressure air or water testing or exfiltration tests, as appropriate. Low pressure air testing for concrete pipes shall conform to ASTM C 924. Low pressure air testing for plastic pipe shall conform to ASTM F 1417. Testing of individual joints for leakage by low pressure air or water shall conform to ASTM C 1103. Prior to exfiltration tests, the trench shall be backfilled up to at least the lower half of the pipe. If required, sufficient additional backfill shall be placed to prevent pipe movement during testing, leaving the joints uncovered to permit inspection. Visible leaks encountered shall be corrected regardless of leakage test results. When the water table is 2 feet or more above the top of the pipe at the upper end of the pipeline section to be tested, infiltration shall be measured using a suitable weir or other device acceptable to the Contracting Officer. An exfiltration test shall be made by filling the line to be tested with water so that a head of at least 2 feet is provided above both the water table and the top of the pipe at the upper end of the pipeline to be tested. The filled line shall be allowed to stand until the pipe has reached its maximum absorption, but not less than 4 hours. After absorption, the head shall be reestablished. The amount of water required to maintain this water level during a 2-hour test period shall be measured. Leakage as measured by the exfiltration test shall not exceed 250 gallons per inch in diameter per mile of pipeline per day. When leakage exceeds the maximum amount specified, satisfactory correction shall be made and retesting accomplished. Testing, correcting, and retesting shall be made at no additional cost to the Government.

-- End of Section --

SECTION 02722

AGGREGATE BASE COURSE
05/01

PART 1 GENERAL

1.1 REFERENCES

The publications listed below form a part of this specification to the extent referenced. The publications are referred to in the text by basic designation only.

AMERICAN ASSOCIATION OF STATE HIGHWAY AND TRANSPORTATION OFFICIALS (AASHTO)

AASHTO T 180	(1997) Moisture-Density Relations of Soils Using a 4.54-kg (10-lb) Rammer and an 457 mm (18-in) Drop
AASHTO T 224	(1996) Correction for Coarse Particles in the Soil Compaction Test

AMERICAN SOCIETY FOR TESTING AND MATERIALS (ASTM)

ASTM C 29/C 29M	(1997) Bulk Density ("Unit Weight") and Voids in Aggregates
ASTM C 117	(1995) Materials Finer Than 75 micrometer (No. 200) Sieve in Mineral Aggregates by Washing
ASTM C 127	(1988; R 1993el) Specific Gravity and Absorption of Course Aggregate
ASTM C 128	(1997) Specific Gravity and Absorption of Fine Aggregate
ASTM C 131	(1996) Resistance to Degradation of Small-Size Coarse Aggregate by Abrasion and Impact in the Los Angeles Machine
ASTM D 75	(1987; R 1997) Sampling Aggregates
ASTM D 422	(1963; R 1998) Particle-Size Analysis of Soils
ASTM D 1556	(2000) Density and Unit Weight of Soil in Place by the Sand-Cone Method
ASTM D 1557	(1991; R 1998) Laboratory Compaction Characteristics of Soil Using Modified Effort (56,000 ft-lbf/cu. ft. (2,700 kN-m/cu.m.))
ASTM D 2487	(2000) Classification of Soils for

	Engineering Purposes (Unified Soil Classification System)
ASTM D 2922	(1996el) Density of Soil and Soil-Aggregate in Place by Nuclear Methods (Shallow Depth)
ASTM D 3017	(1988; R 1996el) Water Content of Soil and Rock in Place by Nuclear Methods (Shallow Depth)
ASTM D 4318	(2000) Liquid Limit, Plastic Limit, and Plasticity Index of Soils
ASTM E 11	(1995) Wire-Cloth Sieves for Testing Purposes

1.2 DEFINITIONS

For the purposes of this specification, the following definitions apply.

1.2.1 Aggregate Base Course

Aggregate base course (ABC) is well graded, durable aggregate uniformly moistened and mechanically stabilized by compaction.

1.2.2 Degree of Compaction

Degree of compaction shall be expressed as a percentage of the maximum density obtained by the test procedure presented in ASTM D 1557.

1.3 SUBMITTALS

Government approval is required for submittals with a "G" designation; submittals not having a "G" designation are for information only. When used, a designation following the "G" designation identifies the office that will review the submittal for the Government. The following shall be submitted in accordance with Section 01330 SUBMITTAL PROCEDURES:

SD-03 Product Data

Plant, Equipment, and Tools

List of proposed equipment to be used in performance of construction work, including descriptive data.

SD-06 Test Reports

Sampling and testing
Field Density Tests; G

Calibration curves and related test results prior to using the device or equipment being calibrated. Copies of field test results within 24 hours after the tests are performed. Certified copies of test results for approval not less than 30 days before material is required for the work.

1.4 SAMPLING AND TESTING

Sampling and testing shall be the responsibility of the Contractor. Sampling and testing shall be performed by a testing laboratory approved in accordance with Section 01451 CONTRACTOR QUALITY CONTROL. Work requiring testing will not be permitted until the testing laboratory has been inspected and approved. The materials shall be tested to establish compliance with the specified requirements; testing shall be performed at the specified frequency. The Contracting Officer may specify the time and location of the tests. Copies of test results shall be furnished to the Contracting Officer within 24 hours of completion of the tests.

1.4.1 Sampling

Samples for laboratory testing shall be taken in conformance with ASTM D 75. When deemed necessary, the sampling will be observed by the Contracting Officer.

1.4.2 Tests

The following tests shall be performed in conformance with the applicable standards listed.

1.4.2.1 Sieve Analysis

Sieve analysis shall be made in conformance with ASTM C 117 and ASTM D 422. Sieves shall conform to ASTM E 11.

1.4.2.2 Liquid Limit and Plasticity Index

Liquid limit and plasticity index shall be determined in accordance with ASTM D 4318.

1.4.2.3 Moisture-Density Determinations

The maximum density and optimum moisture content shall be determined in accordance with ASTM D 1557 or AASHTO T 180, Method D and corrected with AASHTO T 224. To maintain the same percentage of coarse material, the "remove and replace" procedure as described in the NOTE 8 in Paragraph 7.2 of AASHTO T 180 shall be used.

1.4.2.4 Field Density Tests

Density shall be field measured in accordance with ASTM D 1556 or ASTM D 2922. For the method presented in ASTM D 1556 the base plate as shown in the drawing shall be used. For the method presented in ASTM D 2922 the calibration curves shall be checked and adjusted if necessary using only the sand cone method as described in paragraph Calibration, of the ASTM publication. Tests performed in accordance with ASTM D 2922 result in a wet unit weight of soil and when using this method, ASTM D 3017 shall be used to determine the moisture content of the soil. The calibration curves furnished with the moisture gauges shall also be checked along with density calibration checks as described in ASTM D 3017. The calibration checks of both the density and moisture gauges shall be made by the prepared containers of material method, as described in paragraph Calibration of ASTM D 2922, on each different type of material being tested at the beginning of a job and at intervals as directed.

1.4.2.5 Wear Test

Wear tests shall be made on ABC course material in conformance with ASTM C

131.

1.4.3 Testing Frequency

1.4.3.1 Initial Tests

One of each of the following tests shall be performed on the proposed material prior to commencing construction to demonstrate that the proposed material meets all specified requirements when furnished. If materials from more than one source are going to be utilized, this testing shall be completed for each source.

a. Sieve Analysis including No. 635 size material.

b. Liquid limit and plasticity index.

c. Moisture-density relationship.

d. Wear.

e. Soundness.

1.4.3.2 In Place Tests

Each of the following tests shall be performed on samples taken from the placed and compacted ABC. Samples shall be taken and tested at the rates indicated.

a. Density tests shall be performed on every lift of material placed and at a frequency of one set of tests for every 100 square yards, or portion thereof, of completed area.

b. Sieve Analysis including No. 635 size material shall be performed for every 100 tons, or portion thereof, of material placed.

c. Liquid limit and plasticity index tests shall be performed at the same frequency as the sieve analysis.

1.4.4 Approval of Material

The source of the material shall be selected 30 days prior to the time the material will be required in the work. Tentative approval of material will be based on initial test results. Final approval of the materials will be based on sieve analysis, liquid limit, and plasticity index tests performed on samples taken from the completed and fully compacted ABC.

1.5 WEATHER LIMITATIONS

Construction shall be done when the atmospheric temperature is above 35 degrees F. When the temperature falls below 35 degrees F, the Contractor shall protect all completed areas by approved methods against detrimental effects of freezing. Completed areas damaged by freezing, rainfall, or other weather conditions shall be corrected to meet specified requirements.

1.6 PLANT, EQUIPMENT, AND TOOLS

All plant, equipment, and tools used in the performance of the work will be subject to approval before the work is started and shall be maintained in satisfactory working condition at all times. The equipment shall be

adequate and shall have the capability of producing the required compaction, meeting grade controls, thickness control, and smoothness requirements as set forth herein.

PART 2 PRODUCTS

2.1 AGGREGATES

The ABC shall consist of clean, sound, durable particles of crushed stone, crushed slag, crushed gravel, crushed recycled concrete, angular sand, or other approved material. ABC shall be free of lumps of clay, organic matter, and other objectionable materials or coatings. The portion retained on the No. 4 sieve shall be known as coarse aggregate; that portion passing the No. 4 sieve shall be known as fine aggregate.

2.1.1 Coarse Aggregate

Coarse aggregates shall be angular particles of uniform density. When the coarse aggregate is supplied from more than one source, aggregate from each source shall meet the specified requirements and shall be stockpiled separately.

a. Crushed Gravel: Crushed gravel shall be manufactured by crushing gravels, and shall meet all the requirements specified below.

b. Crushed Stone: Crushed stone shall consist of freshly mined quarry rock, and shall meet all the requirements specified below.

c. Crushed Recycled Concrete: Crushed recycled concrete shall consist of previously hardened portland cement concrete or other concrete containing pozzolanic binder material. The recycled material shall be free of all reinforcing steel, bituminous concrete surfacing, and any other foreign material and shall be crushed and processed to meet the required gradations for coarse aggregate. Crushed recycled concrete shall meet all other applicable requirements specified below. Only recycled concrete brought from off site will be allowed for use as coarse aggregate. Recycled concrete may have aggregates that are prone to alkali aggregate reaction. Source, location, and test reports of recycled concrete shall be submitted to Contracting Officer 30 days before material is required for the work. Contracting Officer must approve in writing of using recycled concrete as coarse aggregate.

d. Crushed Slag: Crushed slag shall be an air-cooled blast-furnace product having an air dry unit weight of not less than 65 pcf as determined by ASTM C 29/C 29M, and shall meet all the requirements specified below.

2.1.1.1 Aggregate Base Course

ABC coarse aggregate shall not show more than 50 percent loss when subjected to the Los Angeles abrasion test in accordance with ASTM C 131. The amount of flat and elongated particles shall not exceed 30 percent. A flat particle is one having a ratio of width to thickness greater than 3; an elongated particle is one having a ratio of length to width greater than 3. In the portion retained on each sieve specified, the crushed aggregates shall contain at least 50 percent by weight of crushed pieces having two or more freshly fractured faces with the area of each face being at least equal to 75 percent of the smallest midsectional area of the piece. When two fractures are contiguous, the angle between planes of the fractures must be at least 30 degrees in order to count as two fractured faces.

Crushed gravel shall be manufactured from gravel particles 50 percent of which, by weight, are retained on the maximum size sieve listed in TABLE 1.

2.1.2 Fine Aggregate

Fine aggregates shall be angular particles of uniform density. When the fine aggregate is supplied from more than one source, aggregate from each source shall meet the specified requirements.

2.1.2.1 Aggregate Base Course

ABC fine aggregate shall consist of screenings, angular sand, crushed recycled concrete fines, or other finely divided mineral matter processed or naturally combined with the coarse aggregate.

2.1.3 Gradation Requirements

The specified gradation requirements shall apply to the completed base course. The aggregates shall have a maximum size of 1-1/2 inches and shall be continuously well graded within the limits specified in TABLE 1. Sieves shall conform to ASTM E 11.

TABLE I. GRADATION OF AGGREGATES

Percentage by Weight Passing Square-Mesh Sieve

Sieve Designation	No. 2
2 inch	----
1-1/2 inch	100
1 inch	60-100
1/2 inch	30-65
No. 4	20-50
No. 10	15-40
No. 40	5-25
No. 200	0-8

NOTE 1: Particles having diameters less than 0.0008 inch shall not be in excess of 3 percent by weight of the total sample tested.

NOTE 2: The values are based on aggregates of uniform specific gravity. If materials from different sources are used for the coarse and fine aggregates, they shall be tested in accordance with ASTM C 127 and ASTM C 128 to determine their specific gravities. If the specific gravities vary by more than 10 percent, the percentages passing the various sieves shall be corrected as directed by the Contracting Officer.

2.1.4 Liquid Limit and Plasticity Index

Liquid limit and plasticity index requirements shall apply to the completed course and shall also apply to any component that is blended to meet the required gradation. The portion of any component or of the completed course passing the No. 40 sieve shall be either nonplastic or have a liquid limit not greater than 25 and a plasticity index not greater than 5.

PART 3 EXECUTION

3.1 GENERAL REQUIREMENTS

When the ABC is constructed in more than one layer, the previously constructed layer shall be cleaned of loose and foreign matter by sweeping with power sweepers or power brooms, except that hand brooms may be used in areas where power cleaning is not practicable. Adequate drainage shall be provided during the entire period of construction to prevent water from collecting or standing on the working area. Line and grade stakes shall be provided as necessary for control. Grade stakes shall be in lines parallel to the centerline of the area under construction and suitably spaced for string lining.

3.2 OPERATION OF AGGREGATE SOURCES

Aggregates shall be obtained from offsite sources.

3.3 STOCKPILING MATERIAL

Prior to stockpiling of material, storage sites shall be cleared and leveled by the Contractor. All materials, including approved material available from excavation and grading, shall be stockpiled in the manner and at the locations designated. Aggregates shall be stockpiled on the cleared and leveled areas designated by the Contracting Officer to prevent segregation. Materials obtained from different sources shall be stockpiled separately.

3.4 PREPARATION OF UNDERLYING COURSE

Prior to constructing the ABC, the underlying course or subgrade shall be cleaned of all foreign substances. At the time of construction of the ABC the underlying course shall contain no frozen material. The surface of the underlying course or subgrade shall meet specified compaction and surface tolerances. The underlying course shall conform to Section 02300 EARTHWORK. Ruts or soft yielding spots in the underlying courses, areas having inadequate compaction, and deviations of the surface from the requirements set forth herein shall be corrected by loosening and removing soft or unsatisfactory material and by adding approved material, reshaping to line and grade, and recompacting to specified density requirements. For cohesionless underlying courses containing sands or gravels, as defined in ASTM D 2487, the surface shall be stabilized prior to placement of the ABC. Stabilization shall be accomplished by mixing ABC into the underlying course and compacting by approved methods. The stabilized material shall be considered as part of the underlying course and shall meet all requirements of the underlying course. The finished underlying course shall not be disturbed by traffic or other operations and shall be maintained by the Contractor in a satisfactory condition until the ABC is placed.

3.5 INSTALLATION

3.5.1 Mixing the Materials

The coarse and fine aggregates shall be mixed in a stationary plant, or in a traveling plant or bucket loader on an approved paved working area. The Contractor shall make adjustments in mixing procedures or in equipment as directed to obtain true grades, to minimize segregation or degradation, to obtain the required water content, and to insure a satisfactory ABC meeting

all requirements of this specification.

3.5.2 Placing

The mixed material shall be placed on the prepared subgrade or subbase in layers of uniform thickness with an approved spreader. When a compacted layer 6 inches or less in thickness is required, the material shall be placed in a single layer. When a compacted layer in excess of 6 inches is required, the material shall be placed in layers of equal thickness. No layer shall exceed 6 inches or less than 3 inches when compacted. The layers shall be so placed that when compacted they will be true to the grades or levels required with the least possible surface disturbance. Where the ABC is placed in more than one layer, the previously constructed layers shall be cleaned of loose and foreign matter by sweeping with power sweepers, power brooms, or hand brooms, as directed. Such adjustments in placing procedures or equipment shall be made as may be directed to obtain true grades, to minimize segregation and degradation, to adjust the water content, and to insure an acceptable ABC.

3.5.3 Grade Control

The finished and completed ABC shall conform to the lines, grades, and cross sections shown. Underlying material(s) shall be excavated and prepared at sufficient depth for the required ABC thickness so that the finished ABC with the subsequent surface course will meet the designated grades.

3.5.4 Edges of Base Course

The ABC shall be placed so that the completed section will be a minimum of 5 feet wider, on all sides, than the next layer that will be placed above it. Additionally, approved fill material shall be placed along the outer edges of ABC in sufficient quantities to compact to the thickness of the course being constructed, or to the thickness of each layer in a multiple layer course, allowing in each operation at least a 2 foot width of this material to be rolled and compacted simultaneously with rolling and compacting of each layer of ABC. If this base course material is to be placed adjacent to another pavement section, then the layers for both of these sections shall be placed and compacted along this edge at the same time.

3.5.5 Compaction

Each layer of the ABC shall be compacted as specified with approved compaction equipment. Water content shall be maintained during the compaction procedure to within plus or minus 2 percent of the optimum water content determined from laboratory tests as specified in paragraph SAMPLING AND TESTING. Rolling shall begin at the outside edge of the surface and proceed to the center, overlapping on successive trips at least one-half the width of the roller. Alternate trips of the roller shall be slightly different lengths. Speed of the roller shall be such that displacement of the aggregate does not occur. In all places not accessible to the rollers, the mixture shall be compacted with hand-operated power tampers. Compaction shall continue until each layer has a degree of compaction that is at least 100 percent of laboratory maximum density through the full depth of the layer. The Contractor shall make such adjustments in compacting or finishing procedures as may be directed to obtain true grades, to minimize segregation and degradation, to reduce or increase water content, and to ensure a satisfactory ABC. Any materials that are

found to be unsatisfactory shall be removed and replaced with satisfactory material or reworked, as directed, to meet the requirements of this specification.

3.5.6 Thickness

Compacted thickness of the aggregate course shall be as indicated. No individual layer shall exceed 6 inches nor be less than 3 inches in compacted thickness. The total compacted thickness of the ABC course shall be within 1/2 inch of the thickness indicated. Where the measured thickness is more than 1/2 inch deficient, such areas shall be corrected by scarifying, adding new material of proper gradation, reblading, and recompacting as directed. Where the measured thickness is more than 1/2 inch thicker than indicated, the course shall be considered as conforming to the specified thickness requirements. Average job thickness shall be the average of all thickness measurements taken for the job, but shall be within 1/4 inch of the thickness indicated. The total thickness of the ABC course shall be measured at intervals in such a manner as to ensure one measurement for each 100 square yards of base course. Measurements shall be made in 3 inch diameter test holes penetrating the base course.

3.5.7 Smoothness

The surface of the top layer shall show no deviations in excess of 3/8 inch when tested with a 12 foot straightedge. Measurements shall be taken in successive positions parallel to the centerline of the area to be paved. Measurements shall also be taken perpendicular to the centerline at 50 foot intervals. Deviations exceeding this amount shall be corrected by removing material and replacing with new material, or by reworking existing material and compacting it to meet these specifications.

3.6 TRAFFIC

Traffic shall not be allowed on the completed ABC course.

3.7 MAINTENANCE

The ABC shall be maintained in a satisfactory condition until the full pavement section is completed and accepted. Maintenance shall include immediate repairs to any defects and shall be repeated as often as necessary to keep the area intact. Any ABC that is not paved over prior to the onset of winter, shall be retested to verify that it still complies with the requirements of this specification. Any area of ABC that is damaged shall be reworked or replaced as necessary to comply with this specification.

3.8 DISPOSAL OF UNSATISFACTORY MATERIALS

Any unsuitable materials that must be removed shall be disposed of as directed. No additional payments will be made for materials that must be replaced.

-- End of Section --

SECTION 02741

HOT-MIX ASPHALT (HMA) FOR ROADS
09/99

PART 1 GENERAL

1.1 REFERENCES

The publications listed below form a part of this specification to the extent referenced. The publications are referred to in the text by basic designation only.

AMERICAN ASSOCIATION OF STATE HIGHWAY AND TRANSPORTATION OFFICIALS (AASHTO)

AASHTO MP 2	(1998; Interim 1999) Superpave Volumetric Mix Design
AASHTO TP53	(1998; Interim 1999) Determining Asphalt Content of Hot Mix Asphalt by the Ignition Method

AMERICAN SOCIETY FOR TESTING AND MATERIALS (ASTM)

ASTM C 29/C 29M	(1997) Bulk Density ("Unit Weight") and Voids in Aggregates
ASTM C 88	(1999a) Soundness of Aggregates by Use of Sodium Sulfate or Magnesium Sulfate
ASTM C 117	(1995) Materials Finer than 75 micrometer (No. 200) Sieve in Mineral Aggregates by Washing
ASTM C 131	(1996) Resistance to Degradation of Small-Size Coarse Aggregate by Abrasion and Impact in the Los Angeles Machine
ASTM C 136	(1996a) Sieve Analysis of Fine and Coarse Aggregates
ASTM C 566	(1997) Evaporable Total Moisture Content of Aggregate by Drying
ASTM C 1252	(1998) Uncompacted Void Content of Fine Aggregate (as Influenced by Particle Shape, Surface Texture, and Grading)
ASTM D 140	(1998) Sampling Bituminous Materials
ASTM D 242	(1995) Mineral Filler for Bituminous Paving Mixtures
ASTM D 946	(1999) Penetration-Graded Asphalt Cement

	for Use in Pavement Construction
ASTM D 995	(1995b) Mixing Plants for Hot-Mixed, Hot-Laid Bituminous Paving Mixtures
ASTM D 1461	(1985)) Moisture or Volatile Distillates in Bituminous Paving Mixtures
ASTM D 1559	(1989) Resistance to Plastic Flow of Bituminous Mixtures Using Marshall Apparatus
ASTM D 2041	(1995) Theoretical Maximum Specific Gravity and Density of Bituminous Paving Mixtures
ASTM D 2172	(1995) Quantitative Extraction of Bitumen from Bituminous Paving Mixtures
ASTM D 2419	(1995) Sand Equivalent Value of Soils and Fine Aggregate
ASTM D 2489	(1984; R 1994el) Degree of Particle Coating of Bituminous-Aggregate Mixtures
ASTM D 2726	(1996el) Bulk Specific Gravity and Density of Non-Absorptive Compacted Bituminous Mixture
ASTM D 2950	(1997) Density of Bituminous Concrete in Place by Nuclear Method
ASTM D 3665	(1999) Random Sampling of Construction Materials
ASTM D 3666	(1998) Minimum Requirements for Agencies Testing and Inspecting Bituminous Paving Materials
ASTM D 4125	(1994el)Asphalt Content of Bituminous Mixtures by the Nuclear Method
ASTM D 4791	(1999) Flat Particles, Elongated Particles, or Flat and Elongated Particles in Coarse Aggregate
ASTM D 4867/D 4867M	(1996) Effect of Moisture on Asphalt Concrete Paving Mixtures
ASTM D 5444	(1998) Mechanical Size Analysis of Extracted Aggregate
ASTM D 6307	(1998) Asphalt Content of Hot Mix Asphalt by Ignition Method

ASPHALT INSTITUTE (AI)

AI MS-2	(1997) Mix Design Methods for Asphalt Concrete and Other Hot-Mix Types

AI MS-22 (1998; 2nd Edition) Construction of Hot-Mix Asphalt Pavements

U.S. ARMY CORPS OF ENGINEERS (USACE)

COE CRD-C 171 (1995) Test Method for Determining Percentage of Crushed Particles in Aggregate

1.2 DESCRIPTION OF WORK

The work shall consist of pavement courses composed of mineral aggregate and asphalt material heated and mixed in a central mixing plant and placed on a prepared course. HMA designed and constructed in accordance with this section shall conform to the lines, grades, thicknesses, and typical cross sections shown on the drawings. Each course shall be constructed to the depth, section, or elevation required by the drawings and shall be rolled, finished, and approved before the placement of the next course.

At the option of the Contractor, a currently used Virginia D.O.T. superpave hot mix may be used in lieu of developing a new hot mix design study as described herein. The superpave volumetric mix shall be designed in accordance with AASHTO MP 2. The material shall conform to VDOT Road and Bridge specifications Section 210 and 211. The pavement installatin and testing shall be in accordance with VDOT Road and Bridge specifications Section 315. Acceptance will be on a per lot basis as stated in Paragraph 3.11 of this section.

1.3 SUBMITTALS

Government approval is required for submittals with a "G" designation; submittals not having a "G" designation are for information only. When used, a designation following the "G" designation identifies the office that will review the submittal for the Government. The following shall be submitted in accordance with Section 01330 SUBMITTAL PROCEDURES:

SD-03 Product Data

Mix Design; G.

Proposed JMF.

Contractor Quality Control; G.

Quality control plan.

Material Acceptance; G.

Acceptance test results.

SD-04 Samples

Asphalt Cement Binder; G.

5 gallon sample for mix design verification.

Aggregates; G.

Sufficient materials to produce 200 lb of blended mixture for mix design verification.

SD-06 Test Reports

Aggregates; G.
QC Monitoring; G.

Aggregate and QC test results.

SD-07 Certificates

Asphalt Cement Binder; G.

Copies of certified test data.

Testing Laboratory; G.

Certification of compliance.

Plant Scale Calibration Certification

1.4 ASPHALT MIXING PLANT

Plants used for the preparation of hot-mix asphalt shall conform to the requirements of ASTM D 995 with the following changes:

a. Truck Scales. The asphalt mixture shall be weighed on approved certified scales at the Contractor's expense. Scales shall be inspected and sealed at least annually by an approved calibration laboratory.

b. Testing Facilities. The Contractor shall provide laboratory facilities at the plant for the use of the Government's acceptance testing and the Contractor's quality control testing.

c. Inspection of Plant. The Contracting Officer shall have access at all times, to all areas of the plant for checking adequacy of equipment; inspecting operation of the plant; verifying weights, proportions, and material properties; checking the temperatures maintained in the preparation of the mixtures and for taking samples. The Contractor shall provide assistance as requested, for the Government to procure any desired samples.

d. Storage Bins. Use of storage bins for temporary storage of hot-mix asphalt will be permitted as follows:

(1) The asphalt mixture may be stored in non-insulated storage bins for a period of time not exceeding 3 hours.

(2) The asphalt mixture may be stored in insulated storage bins for a period of time not exceeding 8 hours. The mix drawn from bins shall meet the same requirements as mix loaded directly into trucks.

1.5 HAULING EQUIPMENT

Trucks used for hauling hot-mix asphalt shall have tight, clean, and smooth metal beds. To prevent the mixture from adhering to them, the truck beds shall be lightly coated with a minimum amount of paraffin oil, lime solution, or other approved material. Petroleum based products shall not

be used as a release agent. Each truck shall have a suitable cover to protect the mixture from adverse weather. When necessary to ensure that the mixture will be delivered to the site at the specified temperature, truck beds shall be insulated or heated and covers (tarps) shall be securely fastened.

1.6 ASPHALT PAVERS

Asphalt pavers shall be self-propelled, with an activated screed, heated as necessary, and shall be capable of spreading and finishing courses of hot-mix asphalt which will meet the specified thickness, smoothness, and grade. The paver shall have sufficient power to propel itself and the hauling equipment without adversely affecting the finished surface.

1.6.1 Receiving Hopper

The paver shall have a receiving hopper of sufficient capacity to permit a uniform spreading operation. The hopper shall be equipped with a distribution system to place the mixture uniformly in front of the screed without segregation. The screed shall effectively produce a finished surface of the required evenness and texture without tearing, shoving, or gouging the mixture.

1.6.2 Automatic Grade Controls

If an automatic grade control device is used, the paver shall be equipped with a control system capable of automatically maintaining the specified screed elevation. The control system shall be automatically actuated from either a reference line and/or through a system of mechanical sensors or sensor-directed mechanisms or devices which will maintain the paver screed at a predetermined transverse slope and at the proper elevation to obtain the required surface. The transverse slope controller shall be capable of maintaining the screed at the desired slope within plus or minus 0.1 percent. A transverse slope controller shall not be used to control grade. The controls shall be capable of working in conjunction with any of the following attachments:

a. Ski-type device of not less than 30 feet in length.

b. Taut stringline set to grade.

c. Short ski or shoe for joint matching.

d. Laser control.

1.7 ROLLERS

Rollers shall be in good condition and shall be operated at slow speeds to avoid displacement of the asphalt mixture. The number, type, and weight of rollers shall be sufficient to compact the mixture to the required density while it is still in a workable condition. Equipment which causes excessive crushing of the aggregate shall not be used.

1.8 WEATHER LIMITATIONS

The hot-mix asphalt shall not be placed upon a wet surface or when the surface temperature of the underlying course is less than specified in Table 1. The temperature requirements may be waived by the Contracting Officer, if requested; however, all other requirements, including

compaction, shall be met.

Table 1. Surface Temperature Limitations of Underlying Course

Mat Thickness, inches	Degrees F
3 or greater	40
Less than 3	45

PART 2 PRODUCTS

2.1 AGGREGATES

Aggregates shall consist of crushed stone, crushed gravel, crushed slag, screenings, natural sand and mineral filler, as required. The portion of material retained on the No. 4 sieve is coarse aggregate. The portion of material passing the No. 4 sieve and retained on the No. 200 sieve is fine aggregate. The portion passing the No. 200 sieve is defined as mineral filler. All aggregate test results and samples shall be submitted to the Contracting Officer at least 14 days prior to start of construction.

2.1.1 Coarse Aggregate

Coarse aggregate shall consist of sound, tough, durable particles, free from films of material that would prevent thorough coating and bonding with the asphalt material and free from organic matter and other deleterious substances. All individual coarse aggregate sources shall meet the following requirements:

a. The percentage of loss shall not be greater than 40 percent after 500 revolutions when tested in accordance with ASTM C 131.

b. The percentage of loss shall not be greater than 18 percent after five cycles when tested in accordance with ASTM C 88 using magnesium sulfate or 12 percent when using sodium sulfate.

c. At least 75 percent by weight of coarse aggregate shall have at least two or more fractured faces when tested in accordance with COE CRD-C 171. Fractured faces shall be produced by crushing.

d. The particle shape shall be essentially cubical and the aggregate shall not contain more than 20% percent, by weight, of flat and elongated particles (3:1 ratio of maximum to minimum) when tested in accordance with ASTM D 4791.

e. Slag shall be air-cooled, blast furnace slag, and shall have a compacted weight of not less than 75 lb/cu ft when tested in accordance with ASTM C 29/C 29M.

2.1.2 Fine Aggregate

Fine aggregate shall consist of clean, sound, tough, durable particles. The aggregate particles shall be free from coatings of clay, silt, or any objectionable material and shall contain no clay balls. All individual fine aggregate sources shall have a sand equivalent value not less than 45 when tested in accordance with ASTM D 2419.

The fine aggregate portion of the blended aggregate shall have an uncompacted void content not less than 43.0 percent when tested in accordance with ASTM C 1252 Method A.

2.1.3 Mineral Filler

Mineral filler shall be nonplastic material meeting the requirements of ASTM D 242.

2.1.4 Aggregate Gradation

The combined aggregate gradation shall conform to gradations specified in Table 2, when tested in accordance with ASTM C 136 and ASTM C 117, and shall not vary from the low limit on one sieve to the high limit on the adjacent sieve or vice versa, but grade uniformly from coarse to fine.

Table 2. Aggregate Gradations

Sieve Size, inch	Intermediate Course (IM-1A) Percent Passing by Mass	Surface Course (SM-2A) Percent Passing by Mass
3/4	97-100	100
1/2	72-86	97-100
3/8	---	82-94
No. 4	40-58	48-62
No. 30	14-24	18-24
No. 200	3-6	4-7

2.2 ASPHALT CEMENT BINDER

Asphalt cement binder shall conform to ASTM D 946 penetration grade 60-70. Test data indicating grade certification shall be provided by the supplier at the time of delivery of each load to the mix plant. Copies of these certifications shall be submitted to the Contracting Officer. The supplier is defined as the last source of any modification to the binder. The Contracting Officer may sample and test the binder at the mix plant at any time before or during mix production. Samples for this verification testing shall be obtained by the Contractor in accordance with ASTM D 140 and in the presence of the Contracting Officer. These samples shall be furnished to the Contracting Officer for the verification testing, which shall be at no cost to the Contractor. Samples of the asphalt cement specified shall be submitted for approval not less than 14 days before start of the test section.

2.3 MIX DESIGN

The Contractor shall develop the mix design or substitute a currently used VDOT superpave hot mix in accordance with VDOT Road and Bridge specifications for material, mix design and placement. The asphalt mix shall be composed of a mixture of well-graded aggregate, mineral filler if required, and asphalt material. The aggregate fractions shall be sized, handled in separate size groups, and combined in such proportions that the resulting mixture meets the grading requirements of the job mix formula (JMF). No hot-mix asphalt for payment shall be produced until a JMF has been approved. The hot-mix asphalt shall be designed using procedures contained in AI MS-2 and the criteria shown in Table 3. If the Tensile Strength Ratio (TSR) of the composite mixture, as determined by ASTM D

4867/D 4867M is less than 75, the aggregates shall be rejected or the asphalt mixture treated with an approved anti-stripping agent. The amount of anti-stripping agent added shall be sufficient to produce a TSR of not less than 75. If an antistrip agent is required, it shall be provided by the Contractor at no additional cost. Sufficient materials to produce 200 pounds of blended mixture shall be provided to the Contracting Officer for verification of mix design at least 14 days prior to construction of test section.

2.3.1 JMF Requirements

The job mix formula shall be submitted in writing by the Contractor for approval at least 14 days prior to the start of the test section and shall include as a minimum:

a. Percent passing each sieve size.

b. Percent of asphalt cement.

c. Percent of each aggregate and mineral filler to be used.

d. Asphalt viscosity grade, penetration grade, or performance grade.

e. Number of blows of hammer per side of molded specimen.

f. Laboratory mixing temperature.

g. Lab compaction temperature.

h. Temperature-viscosity relationship of the asphalt cement.

i. Plot of the combined gradation on the 0.45 power gradation chart, stating the nominal maximum size.

j. Graphical plots of stability, flow, air voids, voids in the mineral aggregate, and unit weight versus asphalt content as shown in AI MS-2.

k. Specific gravity and absorption of each aggregate.

l. Percent natural sand.

m. Percent particles with 2 or more fractured faces (in coarse aggregate).

n. Fine aggregate angularity.

o. Percent flat or elongated particles (in coarse aggregate).

p. Tensile Strength Ratio(TSR).

q. Antistrip agent (if required) and amount.

r. List of all modifiers and amount.

s. Percentage and properties (asphalt content, binder properties, and aggregate properties) of reclaimed asphalt pavement (RAP) in accordance with paragraph RECYCLED HOT-MIX ASPHALT, if RAP is used.

Table 3. Marshall Design Criteria

Test Property	50 Blow Mix
Stability, pounds minimum	*1200
Flow, 0.01 inch	8-16
Air voids, percent	3-6
Percent Voids Filled with Asphalt	65-80
Percent Voids in mineral aggregate VMA, (min)	15
TSR, minimum percent	75

* This is a minimum requirement. The average during construction shall be significantly higher than this number to ensure compliance with the specifications.
** Calculate VMA in accordance with AI MS-2, based on ASTM D 2726 bulk specific gravity for the aggregate.

2.3.2 Adjustments to Field JMF

The Laboratory JMF for each mixture shall be in effect until a new formula is approved in writing by the Contracting Officer. Should a change in sources of any materials be made, a new laboratory JMF design shall be performed and a new JMF approved before the new material is used. The Contractor will be allowed to adjust the Laboratory JMF within the limits specified below to optimize mix volumetric properties with the approval of the Contracting Officer. Adjustments to the Laboratory JMF shall be applied to the field (plant) established JMF and limited to those values as shown. Adjustments shall be targeted to produce or nearly produce 4 percent voids total mix (VTM).

TABLE 4. Field (Plant) Established JMF Tolerances

Sieves	Adjustments (plus or minus), percent
No. 4	3
No. 8	3
No. 200	1
Binder Content	0.30

If adjustments are needed that exceed these limits, a new mix design shall be developed. Tolerances given above may permit the aggregate grading to be outside the limits shown in Table 2; while not desirable, this is acceptable.

2.4 RECYCLED HOT MIX ASPHALT

Recycled HMA shall consist of reclaimed asphalt pavement (RAP), coarse aggregate, fine aggregate, mineral filler, and asphalt cement. The RAP shall be of a consistent gradation and asphalt content and properties. When RAP is fed into the plant, the maximum RAP chunk size shall not exceed 2 inches. The recycled HMA mix shall be designed using procedures

contained in AI MS-2 and AI MS-22. The job mix shall meet the requirements of paragraph MIX DESIGN. The amount of RAP shall not exceed 30 percent.

2.4.1 RAP Aggregates and Asphalt Cement

The blend of aggregates used in the recycled mix shall meet the requirements of paragraph AGGREGATES. The percentage of asphalt in the RAP shall be established for the mixture design according to ASTM D 2172 using the appropriate dust correction procedure.

2.4.2 RAP Mix

The blend of new asphalt cement and the RAP asphalt binder shall meet the penetration requirements in paragraph ASPHALT CEMENT BINDER. The virgin asphalt cement shall not be more than two standard asphalt material grades different than that specified in paragraph ASPHALT CEMENT BINDER.

PART 3 EXECUTION

3.1 PREPARATION OF ASPHALT BINDER MATERIAL

The asphalt cement material shall be heated avoiding local overheating and providing a continuous supply of the asphalt material to the mixer at a uniform temperature. The temperature of unmodified asphalts shall be no more than 325 degrees F when added to the aggregates. Modified asphalts shall be no more than 350 degrees F when added to the aggregates.

3.2 PREPARATION OF MINERAL AGGREGATE

The aggregate for the mixture shall be heated and dried prior to mixing. No damage shall occur to the aggregates due to the maximum temperature and rate of heating used. The temperature of the aggregate and mineral filler shall not exceed 350 degrees F when the asphalt cement is added. The temperature shall not be lower than is required to obtain complete coating and uniform distribution on the aggregate particles and to provide a mixture of satisfactory workability.

3.3 PREPARATION OF HOT-MIX ASPHALT MIXTURE

The aggregates and the asphalt cement shall be weighed or metered and introduced into the mixer in the amount specified by the JMF. The combined materials shall be mixed until the aggregate obtains a uniform coating of asphalt binder and is thoroughly distributed throughout the mixture. Wet mixing time shall be the shortest time that will produce a satisfactory mixture, but no less than 25 seconds for batch plants. The wet mixing time for all plants shall be established by the Contractor, based on the procedure for determining the percentage of coated particles described in ASTM D 2489, for each individual plant and for each type of aggregate used. The wet mixing time will be set to at least achieve 95 percent of coated particles. The moisture content of all hot-mix asphalt upon discharge from the plant shall not exceed 0.5 percent by total weight of mixture as measured by ASTM D 1461.

3.4 PREPARATION OF THE UNDERLYING SURFACE

Immediately before placing the hot mix asphalt, the underlying course shall be cleaned of dust and debris. A prime coat and/or tack coat shall be applied in accordance with the contract specifications.

3.5 TEST SECTION

Prior to full production, the Contractor shall place a test section for each JMF used or produce testing documentation and location of previously constructed section of this JMF by the same paving contractor for review and approval. The contractor shall construct a test section 100 feet long and two paver passes wide placed for two lanes, with a longitudinal cold joint. The test section shall be of the same depth as the course which it represents. The underlying grade or pavement structure upon which the test section is to be constructed shall be the same as the remainder of the course represented by the test section. The equipment and personnel used in construction of the test section shall be the same equipment to be used on the remainder of the course represented by the test section. The test section shall be placed as part of the project pavement as approved by the Contracting Officer.

3.5.1 Sampling and Testing for Test Section

One random sample shall be taken at the plant, triplicate specimens compacted, and tested for stability, flow, and laboratory air voids. A portion of the same sample shall be tested for aggregate gradation and asphalt content. Four randomly selected cores shall be taken from the finished pavement mat, and four from the longitudinal joint, and tested for density. Random sampling shall be in accordance with procedures contained in ASTM D 3665. The test results shall be within the tolerances shown in Table 5 for work to continue. If all test results meet the specified requirements, the test section shall remain as part of the project pavement. If test results exceed the tolerances shown, the test section shall be removed and replaced at no cost to the Government and another test section shall be constructed. The test section shall be paid for with the first lot of paving

Table 5. Test Section Requirements for Material and Mixture Properties

Property	Specification Limit
Aggregate Gradation-Percent Passing (Individual Test Result)	
No. 4 and larger	JMF plus or minus 8
No. 8, No. 16, No. 30, and No. 50	JMF plus or minus 6
No. 100 and No. 200	JMF plus or minus 2.0
Asphalt Content, Percent (Individual Test Result)	JMF plus or minus 0.6
Laboratory Air Voids, Percent (Average of 3 specimens)	JMF plus or minus 1.0
VMA, Percent (Average of 3 specimens)	13 for intermediate 15 for surface course; minimum
Stability, pounds (Average of 3 specimens)	1200 minimum
Flow, 0.01 inches (Average of 3 specimens)	8 - 16
Mat Density, Percent of Marshall	

Table 5. Test Section Requirements for Material and Mixture Properties

Property	Specification Limit
(Average of 4 Random Cores)	97.4 - 100.3
Joint Density, Percent of Marshall (Average of 4 Random Cores)	95.9 - 100.3

3.5.2 Additional Test Sections

If the initial test section should prove to be unacceptable, the necessary adjustments to the JMF, plant operation, placing procedures, and/or rolling procedures shall be made. A second test section shall then be placed. Additional test sections, as required, shall be constructed and evaluated for conformance to the specifications. Full production shall not begin until an acceptable section has been constructed and accepted.

3.6 TESTING LABORATORY

The laboratory used to develop the JMF shall meet the requirements of ASTM D 3666. A certification signed by the manager of the laboratory stating that it meets these requirements or clearly listing all deficiencies shall be submitted to the Contracting Officer prior to the start of construction. The certification shall contain as a minimum:

a. Qualifications of personnel; laboratory manager, supervising technician, and testing technicians.

b. A listing of equipment to be used in developing the job mix.

c. A copy of the laboratory's quality control system.

d. Evidence of participation in the AASHTO Materials Reference Laboratory (AMRL) program.

3.7 TRANSPORTING AND PLACING

3.7.1 Transporting

The hot-mix asphalt shall be transported from the mixing plant to the site in clean, tight vehicles. Deliveries shall be scheduled so that placing and compacting of mixture is uniform with minimum stopping and starting of the paver. Adequate artificial lighting shall be provided for night placements. Hauling over freshly placed material will not be permitted until the material has been compacted as specified, and allowed to cool to 140 degrees F. To deliver mix to the paver, the Contractor shall use a material transfer vehicle which shall be operated to produce continuous forward motion of the paver.

3.7.2 Placing

The mix shall be placed and compacted at a temperature suitable for obtaining density, surface smoothness, and other specified requirements. Upon arrival, the mixture shall be placed to the full width by an asphalt paver; it shall be struck off in a uniform layer of such depth that, when the work is completed, it shall have the required thickness and conform to the grade and contour indicated. The speed of the paver shall be regulated to eliminate pulling and tearing of the asphalt mat. Unless otherwise

permitted, placement of the mixture shall begin along the centerline of a crowned section or on the high side of areas with a one-way slope. The mixture shall be placed in consecutive adjacent strips having a minimum width of 10 feet. The longitudinal joint in one course shall offset the longitudinal joint in the course immediately below by at least 1 foot; however, the joint in the surface course shall be at the centerline of the pavement. Transverse joints in one course shall be offset by at least 10 feet from transverse joints in the previous course. Transverse joints in adjacent lanes shall be offset a minimum of 10 feet. On isolated areas where irregularities or unavoidable obstacles make the use of mechanical spreading and finishing equipment impractical, the mixture may be spread and luted by hand tools.

3.8 COMPACTION OF MIXTURE

After placing, the mixture shall be thoroughly and uniformly compacted by rolling. The surface shall be compacted as soon as possible without causing displacement, cracking or shoving. The sequence of rolling operations and the type of rollers used shall be at the discretion of the Contractor. The speed of the roller shall, at all times, be sufficiently slow to avoid displacement of the hot mixture and be effective in compaction. Any displacement occurring as a result of reversing the direction of the roller, or from any other cause, shall be corrected at once. Sufficient rollers shall be furnished to handle the output of the plant. Rolling shall continue until the surface is of uniform texture, true to grade and cross section, and the required field density is obtained. To prevent adhesion of the mixture to the roller, the wheels shall be kept properly moistened but excessive water will not be permitted. In areas not accessible to the roller, the mixture shall be thoroughly compacted with hand tampers. Any mixture that becomes loose and broken, mixed with dirt, contains check-cracking, or is in any way defective shall be removed full depth, replaced with fresh hot mixture and immediately compacted to conform to the surrounding area. This work shall be done at the Contractor's expense. Skin patching will not be allowed.

3.9 JOINTS

The formation of joints shall be made ensuring a continuous bond between the courses and to obtain the required density. All joints shall have the same texture as other sections of the course and meet the requirements for smoothness and grade.

3.9.1 Transverse Joints

The roller shall not pass over the unprotected end of the freshly laid mixture, except when necessary to form a transverse joint. When necessary to form a transverse joint, it shall be made by means of placing a bulkhead or by tapering the course. The tapered edge shall be cut back to its full depth and width on a straight line to expose a vertical face prior to placing material at the joint. The cutback material shall be removed from the project. In both methods, all contact surfaces shall be given a light tack coat of asphalt material before placing any fresh mixture against the joint.

3.9.2 Longitudinal Joints

Longitudinal joints which are irregular, damaged, uncompacted, cold (less than 175 degrees F at the time of placing adjacent lanes), or otherwise defective, shall be cut back a minimum of 2 inches from the edge with a

cutting wheel to expose a clean, sound vertical surface for the full depth of the course. All cutback material shall be removed from the project. All contact surfaces shall be given a light tack coat of asphalt material prior to placing any fresh mixture against the joint. The Contractor will be allowed to use an alternate method if it can be demonstrated that density, smoothness, and texture can be met.

3.10 CONTRACTOR QUALITY CONTROL

3.10.1 General Quality Control Requirements

The Contractor shall develop an approved Quality Control Plan. Hot-mix asphalt for payment shall not be produced until the quality control plan has been approved. The plan shall address all elements which affect the quality of the pavement including, but not limited to:

a. Mix Design

b. Aggregate Grading

c. Quality of Materials

d. Stockpile Management

e. Proportioning

f. Mixing and Transportation

g. Mixture Volumetrics

h. Moisture Content of Mixtures

i. Placing and Finishing

j. Joints

k. Compaction

l. Surface Smoothness

3.10.2 Testing Laboratory

The Contractor shall provide a fully equipped asphalt laboratory located at the plant or job site. The laboratory shall meet the requirements as required in ASTM D 3666. The effective working area of the laboratory shall be a minimum of 150 square feet with a ceiling height of not less than 7.5 feet. Lighting shall be adequate to illuminate all working areas. It shall be equipped with heating and air conditioning units to maintain a temperature of 75 degrees F plus or minus 5 degrees F. Laboratory facilities shall be kept clean and all equipment shall be maintained in proper working condition. The Contracting Officer shall be permitted unrestricted access to inspect the Contractor's laboratory facility, to witness quality control activities, and to perform any check testing desired. The Contracting Officer will advise the Contractor in writing of any noted deficiencies concerning the laboratory facility, equipment, supplies, or testing personnel and procedures. When the deficiencies are serious enough to adversely affect test results, the incorporation of the materials into the work shall be suspended immediately and will not be permitted to resume until the deficiencies are corrected.

3.10.3 Quality Control Testing

The Contractor shall perform all quality control tests applicable to these specifications and as set forth in the Quality Control Program. The testing program shall include, but shall not be limited to, tests for the control of asphalt content, aggregate gradation, temperatures, aggregate moisture, moisture in the asphalt mixture, laboratory air voids, stability, flow, in-place density, grade and smoothness. A Quality Control Testing Plan shall be developed as part of the Quality Control Program.

3.10.3.1 Asphalt Content

A minimum of two tests to determine asphalt content will be performed per lot (a lot is defined in paragraph MATERIAL ACCEPTANCE) by one of the following methods: the extraction method in accordance with ASTM D 2172, Method A or B, the ignition method in accordance with the AASHTO TP53 or ASTM D 6307, or the nuclear method in accordance with ASTM D 4125, provided the nuclear gauge is calibrated for the specific mix being used. For the extraction method, the weight of ash, as described in ASTM D 2172, shall be determined as part of the first extraction test performed at the beginning of plant production; and as part of every tenth extraction test performed thereafter, for the duration of plant production. The last weight of ash value obtained shall be used in the calculation of the asphalt content for the mixture.

3.10.3.2 Gradation

Aggregate gradations shall be determined a minimum of twice per lot from mechanical analysis of recovered aggregate in accordance with ASTM D 5444. When asphalt content is determined by the nuclear method, aggregate gradation shall be determined from hot bin samples on batch plants, or from the cold feed on drum mix plants. For batch plants, aggregates shall be tested in accordance with ASTM C 136 using actual batch weights to determine the combined aggregate gradation of the mixture.

3.10.3.3 Temperatures

Temperatures shall be checked at least four times per lot, at necessary locations, to determine the temperature at the dryer, the asphalt cement in the storage tank, the asphalt mixture at the plant, and the asphalt mixture at the job site.

3.10.3.4 Aggregate Moisture

The moisture content of aggregate used for production shall be determined a minimum of once per lot in accordance with ASTM C 566.

3.10.3.5 Moisture Content of Mixture

The moisture content of the mixture shall be determined at least once per lot in accordance with ASTM D 1461 or an approved alternate procedure.

3.10.3.6 Laboratory Air Voids, Marshall Stability and Flow

Mixture samples shall be taken at least two times per lot and compacted into specimens, using 50 blows per side with the Marshall hammer as described in ASTM D 1559. After compaction, the laboratory air voids of each specimen shall be determined, as well as the Marshall stability and

flow.

3.10.3.7 In-Place Density

The Contractor shall conduct any necessary testing to ensure the specified density is achieved. A nuclear gauge may be used to monitor pavement density in accordance with ASTM D 2950.

3.10.3.8 Grade and Smoothness

The Contractor shall conduct the necessary checks to ensure the grade and smoothness requirements are met in accordance with paragraph MATERIAL ACCEPTANCE.

3.10.3.9 Additional Testing

Any additional testing, which the Contractor deems necessary to control the process, may be performed at the Contractor's option.

3.10.3.10 QC Monitoring

The Contractor shall submit all QC test results to the Contracting Officer on a daily basis as the tests are performed. The Contracting Officer reserves the right to monitor any of the Contractor's quality control testing and to perform duplicate testing as a check to the Contractor's quality control testing.

3.10.4 Sampling

When directed by the Contracting Officer, the Contractor shall sample and test any material which appears inconsistent with similar material being produced, unless such material is voluntarily removed and replaced or deficiencies corrected by the Contractor. All sampling shall be in accordance with standard procedures specified.

3.10.5 Control Charts

For process control, the Contractor shall establish and maintain linear control charts on both individual samples and the running average of last four samples for the parameters listed in Table 6, as a minimum. These control charts shall be posted as directed by the Contracting Officer and shall be kept current at all times. The control charts shall identify the project number, the test parameter being plotted, the individual sample numbers, the Action and Suspension Limits listed in Table 6 applicable to the test parameter being plotted, and the Contractor's test results. Target values from the JMF shall also be shown on the control charts as indicators of central tendency for the cumulative percent passing, asphalt content, and laboratory air voids parameters. When the test results exceed either applicable Action Limit, the Contractor shall take immediate steps to bring the process back in control. When the test results exceed either applicable Suspension Limit, the Contractor shall halt production until the problem is solved. The Contractor shall use the control charts as part of the process control system for identifying trends so that potential problems can be corrected before they occur. Decisions concerning mix modifications shall be made based on analysis of the results provided in the control charts. The Quality Control Plan shall indicate the appropriate action which shall be taken to bring the process into control when certain parameters exceed their Action Limits.

Table 6. Action and Suspension Limits for the Parameters to be Plotted on Individual and Running Average Control Charts

	Running Average of Individual Samples		Last Four Samples	
Parameter to be Plotted	Action Limit	Suspension Limit	Action Limit	Suspension Limit
No. 4 sieve, Cumulative % Passing, deviation from JMF target; plus or minus values	6	8	4	5
No. 30 sieve, Cumulative % Passing, deviation from JMF target; plus or minus values	4	6	3	4
No. 200 sieve, Cumulative % Passing, deviation from JMF target; plus or minus values	1.4	2.0	1.1	1.5
Stability, pounds (minimum) 75 Blow JMF	1200	1100	1300	1200
Flow, 0.01 inches 75 Blow	8 min. 16 max.	7 min. 17 max.	9 min. 15 max.	8 min. 16 max.
Asphalt content, % deviation from JMF target; plus or minus value	0.4	0.5	0.2	0.3
Laboratory Air Voids, % deviation from JMF target value	Above 6.0 Below 3.0			
In-place Mat Density, % of Marshall density	Above 100.5 Below 97.0			
In-place Joint Density, % of Marshall density	Above 100.5 Below 95.5			

3.11 MATERIAL ACCEPTANCE

Testing for acceptability of work will be performed by an independent laboratory hired by the Contractor. Test results shall be forwarded daily to the Contracting Officer. Acceptance of the plant produced mix and in-place requirements will be on a lot to lot basis. A standard lot for all requirements will be equal to 1000 tons or one day's production. Grade and surface smoothness determinations will be made on the lot as a whole. Exceptions or adjustments to this will be made in situations where the mix within one lot is placed as part of both the intermediate and surface courses, thus grade and smoothness measurements for the entire lot cannot be made. In order to evaluate laboratory air voids and in-place (field) density, each lot will be divided into two equal sublots.

3.11.1 Acceptance

When a lot of material fails to meet the specification as outlined in the following paragraphs, that lot shall be removed and replaced.

3.11.2 Sublot Sampling

One random mixture sample for determining laboratory air voids, theoretical maximum density, and for any additional testing the Contracting Officer desires, will be taken from a loaded truck delivering mixture to each sublot, or other appropriate location for each sublot. All samples will be selected randomly, using commonly recognized methods of assuring randomness conforming to ASTM D 3665 and employing tables of random numbers or computer programs. Laboratory air voids will be determined from three laboratory compacted specimens of each sublot sample in accordance with ASTM D 1559. The specimens will be compacted within 2 hours of the time the mixture was loaded into trucks at the asphalt plant. Samples will not be reheated prior to compaction and insulated containers will be used as necessary to maintain the temperature.

3.11.3 Additional Sampling and Testing

The Contracting Officer reserves the right to direct additional samples and tests for any area which appears to deviate from the specification requirements. The cost of any additional testing will be paid for by the Government. Testing in these areas will be in addition to the lot testing, and the requirements for these areas will be the same as those for a lot.

3.11.4 Laboratory Air Voids

Laboratory air voids will be calculated by determining the Marshall density of each lab compacted specimen using ASTM D 2726 and determining the theoretical maximum density of every other sublot sample using ASTM D 2041. Laboratory air void calculations for each sublot will use the latest theoretical maximum density values obtained, either for that sublot or the previous sublot. The mean absolute deviation of the four laboratory air void contents (one from each sublot) from the JMF air void content will be evaluated and a pay factor determined from Table 7. All laboratory air void tests will be completed and reported within 24 hours after completion of construction of each lot.

3.11.5 Mean Absolute Deviation

An example of the computation of mean absolute deviation for laboratory air voids is as follows: Assume that the laboratory air voids are determined from 4 random samples of a lot (where 3 specimens were compacted from each sample). The average laboratory air voids for each sublot sample are determined to be 3.5, 3.0, 4.0, and 3.7. Assume that the target air voids from the JMF is 4.0. The mean absolute deviation is then:

Mean Absolute Deviation = (|3.5 - 4.0| + |3.0 - 4.0| + |4.0 - 4.0| + |3.7 - 4.0|/4

= (0.5 + 1.0 + 0.0 + 0.3)/4 = (1.8)/4 = 0.45

The mean absolute deviation for laboratory air voids is determined to be 0.45. It can be seen from Table 7 that the lot's acceptance based on laboratory air voids.

Table 7. Acceptance Based on Laboratory Air Voids

Mean Absolute Deviation of Lab Air Voids from JMF	
0.70 or less	Accept
Above 0.71	Rejected

3.11.6 In-place Density

3.11.6.1 General Density Requirements

For determining in-place density, one random core will be taken by the Government from the mat (interior of the lane) of each sublot, and one random core will be taken from the joint (immediately over joint) of each sublot. Each random core will be full thickness of the layer being placed. When the random core is less than 1 inch thick, it will not be included in the analysis. In this case, another random core will be taken. After air drying to a constant weight, cores obtained from the mat and from the joints will be used for in-place density determination.

3.11.6.2 Mat and Joint Densities

The average in-place mat and joint densities are expressed as a percentage of the average Marshall density for the lot. The Marshall density for each lot will be determined as the average Marshall density of the two random samples (3 specimens compacted per sample). The average in-place mat density and joint density for a lot are determined and compared with Table 8 to calculate acceptance per lot based on in-place density, as described below. Acceptance for both mat density and joint density are determined from Table 8. The area associated with the joint is then determined and will be considered to be 10 feet wide times the length of completed longitudinal construction joint in the lot. This area will not exceed the total lot size. The length of joint to be considered will be that length where a new lane has been placed against an adjacent lane of hot-mix asphalt pavement, either an adjacent freshly paved lane or one paved at any time previously. The area associated with the joint is expressed as a percentage of the total lot area. Acceptance for the joint is determined based on this percentage (see example below). The acceptance for mat density and for joint density is compared and the lowest selected. When the Marshall density on both sides of a longitudinal joint is different, the average of these two densities will be used as the Marshall density needed to calculate the percent joint density. All density results for a lot will be completed and reported within 24 hours after the construction of that lot.

Table 8. Acceptance Based on In-place Density

Average Mat Density (2 Cores)		Average Joint Density (2 Cores)
above 97.4 or below 100.3	Accept	96.0 or above
below 97.4 or above 100.3	Reject	below 95.9

3.11.6.3 Acceptance Based on In-place Density

An example of the computation of acceptance (in I-P units only) based on in-place density, is as follows: Assume the following test results for field density made on the lot: (1) Average mat density = 97.6 percent (of

lab density). (2) Average joint density = 95.9 percent (of lab density). (3) Total area of lot = 30,000 square feet. (4) Length of completed longitudinal construction joint = 2000 feet.

a. Step 1: Determine acceptance based on mat density and on joint density, using Table 8:

Mat density of 97.6 percent = Accepted.

Joint density of 95.9 percent = Accepted.

3.11.7 Grade

The surface course of pavement shall conform to the elevations and cross sections shown and shall vary not more than 0.05 foot from the plan grade established and approved at site of work. Finished surfaces at juncture with other pavements shall coincide with finished surfaces of abutting pavements. Deviation from the plan elevation will not be permitted in areas of pavements where closer conformance with planned elevation is required for the proper functioning of drainage and other appurtenant structures involved. The surface course of the pavement will be tested for conformance with specified plan grade requirements. The grade will be determined by running lines of levels at intervals of 25 feet, or less, longitudinally and transversely, to determine the elevation of the completed pavement surface. Within 5 working days, after the completion of a particular lot incorporating the surface course, the Contracting Officer will inform the Contractor in writing, of the results of the grade-conformance tests. In areas where the grade exceeds the tolerance by more than 50 percent, the Contractor shall remove the surface lift full depth; the Contractor shall then replace the lift with hot-mix asphalt to meet specification requirements, at no additional cost to the Government. Diamond grinding may be used to remove high spots to meet grade requirements. Skin patching for correcting low areas or planing or milling for correcting high areas will not be permitted.

3.11.8 Surface Smoothness

The Contractor shall use the following methods to test and evaluate surface smoothness of the pavement. All testing shall be performed in the presence of the Contracting Officer. Detailed notes of the results of the testing shall be kept and a copy furnished to the Government immediately after each day's testing. Where drawings show required deviations from a plane surface (crowns, drainage inlets, etc.), the surface shall be finished to meet the approval of the Contracting Officer.

3.11.8.1 Smoothness Requirements

a. Straightedge Testing: The finished surfaces of the pavements shall have no abrupt change of 1/4 inch or more, and all pavements shall be within the tolerances specified in Table 9 when checked with an approved 12 foot straightedge.

Table 9. Straightedge Surface Smoothness--Pavements

Pavement Category	Direction of Testing	Tolerance, inches
All paved areas	Longitudinal	1/4
	Transverse	1/4

3.11.8.2 Testing Method

After the final rolling, but not later than 24 hours after placement, the surface of the pavement in each entire lot shall be tested by the Contractor in such a manner as to reveal all surface irregularities exceeding the tolerances specified above. Separate testing of individual sublots is not required. If any pavement areas are ground, these areas shall be retested immediately after grinding. The entire area of the pavement shall be tested in both a longitudinal and a transverse direction on parallel lines. The transverse lines shall be 25 feet or less apart, as directed. The longitudinal lines shall be at the centerline of each paving lane for lines less than 20 feet and at the third points for lanes 20 feet or greater. Other areas having obvious deviations shall also be tested. Longitudinal testing lines shall be continuous across all joints.

a. Straightedge Testing. The straightedge shall be held in contact with the surface and moved ahead one-half the length of the straightedge for each successive measurement. The amount of surface irregularity shall be determined by placing the freestanding (unleveled) straightedge on the pavement surface and allowing it to rest upon the two highest spots covered by its length, and measuring the maximum gap between the straightedge and the pavement surface in the area between these two high points.

3.11.8.3 Acceptance for Smoothness

a. Straightedge Testing. Location and deviation from straightedge for all measurements shall be recorded. When between 5.0 and 10.0 percent of all measurements made within a lot exceed the tolerance specified in paragraph Smoothness Requirements above, after any reduction of high spots or removal and replacement, the lot will be accepted for surface smoothness. When more than 10.0 percent of all measurements exceed the tolerance, lot shall be removed and replaced at no additional cost to the Government. Regardless of the above, any small individual area with surface deviation which exceeds the tolerance given above by more than 50 percent, shall be corrected by diamond grinding to meet the specification requirements above or shall be removed and replaced at no additional cost to the Government.

-- End of Section --

SECTION 02748

BITUMINOUS TACK AND PRIME COATS
01/98

PART 1 GENERAL

1.1 REFERENCES

The publications listed below form a part of this specification to the extent referenced. The publications are referred to in the text by basic designation only.

AMERICAN ASSOCIATION OF STATE HIGHWAY AND TRANSPORTATION OFFICIALS (AASHTO)

AASHTO T 40	(1978; R 1996) Sampling Bituminous Materials

AMERICAN SOCIETY FOR TESTING AND MATERIALS (ASTM)

ASTM D 140	(200) Sampling Bituminous Materials
ASTM D 2397	(1998) Cationic Emulsified Asphalt
ASTM D 2995	(1999) Determining Application Rate of Bituminous Distributors

1.2 SUBMITTALS

Government approval is required for submittals with a "G" designation; submittals not having a "G" designation are for information only. When used, a designation following the "G" designation identifies the office that will review the submittal for the Government. The following shall be submitted in accordance with Section 01330 SUBMITTAL PROCEDURES:

SD-06 Test Reports

Sampling and Testing

Copies of all test results for bituminous materials, within 24 hours of completion of tests. Certified copies of the manufacturer's test reports indicating compliance with applicable specified requirements, not less than 30 days before the material is required in the work.

1.3 PLANT, EQUIPMENT, MACHINES AND TOOLS

1.3.1 General Requirements

Plant, equipment, machines and tools used in the work shall be subject to approval and shall be maintained in a satisfactory working condition at all times.

1.3.2 Bituminous Distributor

The distributor shall have pneumatic tires of such size and number to prevent rutting, shoving or otherwise damaging the base surface or other layers in the pavement structure. The distributor shall be designed and equipped to spray the bituminous material in a uniform coverage at the specified temperature, at readily determined and controlled rates with an allowable variation from the specified rate of not more than plus or minus 5 percent, and at variable widths. Distributor equipment shall include a separate power unit for the bitumen pump, full-circulation spray bars, tachometer, pressure gauges, volume-measuring devices, adequate heaters for heating of materials to the proper application temperature, a thermometer for reading the temperature of tank contents, and a hand hose attachment suitable for applying bituminous material manually to areas inaccessible to the distributor. The distributor shall be equipped to circulate and agitate the bituminous material during the heating process.

1.3.3 Power Brooms and Power Blowers

Power brooms and power blowers shall be suitable for cleaning the surfaces to which the bituminous coat is to be applied.

1.4 WEATHER LIMITATIONS

Bituminous coat shall be applied only when the surface to receive the bituminous coat is dry. Bituminous coat shall be applied only when the atmospheric temperature in the shade is 50 degrees F or above and when the temperature has not been below 35 degrees F for the 12 hours prior to application.

PART 2 PRODUCTS

2.1 TACK COAT

Emulsified asphalt shall conform to ASTM D 2397.

2.2 PRIME COAT

Emulsified asphalt shall conform to ASTM D 2397.

PART 3 EXECUTION

3.1 PREPARATION OF SURFACE

Immediately before applying the bituminous coat, all loose material, dirt, clay, or other objectionable material shall be removed from the surface to be treated. The surface shall be dry and clean at the time of treatment.

3.2 APPLICATION RATE

The exact quantities within the range specified, which may be varied to suit field conditions, will be determined by the Contracting Officer.

3.2.1 Tack Coat

Bituminous material for the tack coat shall be applied in quantities of not less than 0.05 gallon nor more than 0.15 gallon per square yard of pavement surface.

3.2.2 Prime Coat

Bituminous material for the prime coat shall be applied in quantities of not less than 0.15 gallon nor more than 0.40 gallon per square yard of pavement surface.

3.3 APPLICATION TEMPERATURE

3.3.1 Viscosity Relationship

Asphalt application temperature shall provide an application viscosity between 10 and 60 seconds, Saybolt Furol, or between 20 and 120 centistokes, kinematic. The temperature viscosity relation shall be furnished to the Contracting Officer.

3.3.2 Temperature Ranges

The viscosity requirements shall determine the application temperature to be used. The following is a normal range of application temperatures:

Emulsions	
CRS-1	125-185 degrees F
CSS-1	70-160 degrees F
CSS-1h	70-160 degrees F

*These temperature ranges exceed the flash point of the material and care should be taken in their heating.

3.4 APPLICATION

3.4.1 General

Following preparation and subsequent inspection of the surface, the bituminous coat shall be applied at the specified rate with uniform distribution over the surface to be treated. All areas and spots missed by the distributor shall be properly treated with the hand spray. Until the succeeding layer of pavement is placed, the surface shall be maintained by protecting the surface against damage and by repairing deficient areas at no additional cost to the Government. If required, clean dry sand shall be spread to effectively blot up any excess bituminous material. No smoking, fires, or flames other than those from the heaters that are a part of the equipment shall be permitted within 25 feet of heating, distributing, and transferring operations of bituminous material other than bituminous emulsions. All traffic, except for paving equipment used in constructing the surfacing, shall be prevented from using the underlying material, whether primed or not, until the surfacing is completed. The bituminous coat shall conform to all requirements as described herein.

3.4.2 Prime Coat

The prime coat will be required if it will be at least seven days before a the surfacing (Asphalt cement hot mix concrete)layer is constructed on the underlying (base course, etc)compacted material. The type of liquid asphalt and application rate will be as specified herein. The Contractor shall protect the underlying from any damage (water, traffic, etc.) until the surfacing is placed. If the Contractor places the surfacing within seven days, the choice of protection measures or actions to be taken is at the Contractor's option. Damage to the underlying material caused by lack of, or inadequate, protection shall be repaired (recompacted or replaced) by approved methods at no additional cost to the Government. If the

Contractor options to use the prime coat, it shall be applied as soon as possible after consolidation of the underlying material. To obtain uniform application of the prime coat on the surface treated at the junction of previous and subsequent applications, building paper shall be spread on the surface for a sufficient distance back from the ends of each application to start and stop the prime coat on the paper. Immediately after application, the building paper shall be removed and destroyed.

3.4.3 Tack Coat

Tack coat shall be applied at the locations shown on the drawings.

3.5 CURING PERIOD

Following application of the bituminous material and prior to application of the succeeding layer of pavement, the bituminous coat shall be allowed to cure and to obtain evaporation of any volatiles or moisture. Prime coat shall be allowed to cure without being disturbed for a period of at least 48 hours or longer, as may be necessary to attain penetration into the treated course.

3.6 FIELD QUALITY CONTROL

Samples of the bituminous material used shall be obtained by the Contractor as directed, under the supervision of the Contracting Officer. The sample may be retained and tested by the Government at no cost to the Contractor.

3.7 SAMPLING AND TESTING

Sampling and testing shall be performed by an approved commercial testing laboratory or by facilities furnished by the Contractor. No work requiring testing will be permitted until the facilities have been inspected and approved.

3.7.1 Sampling

The samples of bituminous material, unless otherwise specified, shall be in accordance with ASTM D 140 or AASHTO T 40. Sources from which bituminous materials are to be obtained shall be selected and notification furnished the Contracting Officer within 15 days after the award of the contract.

3.7.2 Calibration Test

The Contractor shall furnish all equipment, materials, and labor necessary to calibrate the bituminous distributor. Calibration shall be made with the approved job material and prior to applying the bituminous coat material to the prepared surface. Calibration of the bituminous distributor shall be in accordance with ASTM D 2995.

3.7.3 Trial Applications

Before providing the complete bituminous coat, three lengths of at least 100 feet for the full width of the distributor bar shall be applied to evaluate the amount of bituminous material that can be satisfactorily applied.

3.7.3.1 Tack Coat Trial Application Rate

Unless otherwise authorized, the trial application rate of bituminous tack

coat materials shall be applied in the amount of 0.05 gallons per square yard. Other trial applications shall be made using various amounts of material as may be deemed necessary.

3.7.3.2 Prime Coat Trial Application Rate

Unless otherwise authorized, the trial application rate of bituminous materials shall be applied in the amount of 0.25 gallon per square yard. Other trial applications shall be made using various amounts of material as may be deemed necessary.

3.7.4 Sampling and Testing During Construction

Quality control sampling and testing shall be performed as required in paragraph FIELD QUALITY CONTROL.

-- End of Section --&

SECTION 02754

CONCRETE PAVEMENTS FOR SMALL PROJECTS
07/01

PART 1 GENERAL

1.1 REFERENCES

The publications listed below form a part of this specification to the extent referenced. The publications are referred to in the text by basic designation only.

ACI INTERNATIONAL (ACI)

ACI 211.1	(1991) Standard Practice for Selecting Proportions for Normal, Heavyweight, and Mass Concrete
ACI 301	(1999) Standard Specifications for Structural Concrete
ACI 305R	(1999) Hot Weather Concreting

AMERICAN SOCIETY FOR TESTING AND MATERIALS (ASTM)

ASTM A 184/A 184M	(1996) Fabricated Deformed Steel Bar Mats for Concrete Reinforcement
ASTM A 615/A 615M	(2000) Deformed and Plain Billet-Steel Bars for Concrete Reinforcement
ASTM C 31/C 31M	(2000) Making and Curing Concrete Test Specimens in the Field
ASTM C 33	(1999ael) Concrete Aggregates
ASTM C 39/C 39M	(1999) Compressive Strength of Cylindrical Concrete Specimens
ASTM C 94/C 94M	(2000) Ready-Mixed Concrete
ASTM C 123	(1998) Lightweight Particles in Aggregate
ASTM C 143/C 143M	(2000) Slump of Hydraulic Cement Concrete
ASTM C 150	(1999a) Portland Cement
ASTM C 192/C 192M	(2000) Making and Curing Concrete Test Specimens in the Laboratory
ASTM C 231	(1997el) Air Content of Freshly Mixed Concrete by the Pressure Method
ASTM C 260	(2000) Air-Entraining Admixtures for Concrete

ASTM C 309	(1997) Liquid Membrane - Forming Compounds for Curing Concrete
ASTM C 494/C 494M	(1999a) Chemical Admixtures for Concrete
ASTM C 618	(2000) Coal Fly Ash and Raw or Calcined Natural Pozzolan for Use as a Mineral Admixture in Concrete
ASTM C 666	(1997) Resistance of Concrete to Rapid Freezing and Thawing
ASTM C 881	(1999) Epoxy-Resin-Base Bonding Systems for Concrete
ASTM C 1077	(1998) Laboratories Testing Concrete and Concrete Aggregates for Use in Construction and Criteria for Laboratory Evaluation
ASTM C 1240	(2001) Standard Specification for Use of Silica Fume for Use as a Mineral Admixture in Hydraulic-Cement Concrete, Mortar and Grout
ASTM D 1751	(1999) Preformed Expansion Joint Filler for Concrete Paving and Structural Construction (Nonextruding and Resilient Bituminous Types)
ASTM D 1752	(1984; R 1996el) Preformed Sponge Rubber and Cork Expansion Joint Fillers for Concrete Paving and Structural Construction

U.S. ARMY CORPS OF ENGINEERS (USACE)

COE CRD-C 130	(1989) Scratch Hardness of Coarse Aggregate Particles
COE CRD-C 540	(1971; R 1981) Standard Specification for Nonbituminous Inserts for Contraction Joints in Portland Cement Concrete Airfield Pavements, Sawable Type
COE CRD-C 572	(1974) Corps of Engineers Specifications for Polyvinylchloride Waterstop

NATIONAL READY-MIXED CONCRETE ASSOCIATION (NRMCA)

NRMCA CPMB 100	(1996) Concrete Plant Standards

1.2 SYSTEM DESCRIPTION

This section is intended to stand alone for construction of concrete (rigid) pavement for roads, parking, and exterior vehicle pavements. However, where the construction covered herein interfaces with other

sections, the construction at each interface shall conform to the requirements of both this section and the other section, including tolerances for both.

1.3 ACCEPTABILITY OF WORK

The pavement will be accepted on the basis of tests made by the Government and by the Contractor or its suppliers, as specified herein. The Government may, at its discretion, make check tests to validate the results of the Contractor's testing. Concrete samples shall be taken by the Contractor at the placement to determine the slump, air content, and strength of the concrete. Test cylinders shall be made for determining conformance with the strength requirements of these specifications and, when required, for determining the time at which pavements may be placed into service. All air content measurements shall be determined in accordance with ASTM C 231. All slump tests shall be made in accordance with ASTM C 143/C 143M. All test cylinders shall be 6 by 12 inch cylinders and shall be fabricated in accordance with ASTM C 192/C 192M, using only steel molds, cured in accordance with ASTM C 31/C 31M, and tested in accordance with ASTM C 39/C 39M. A strength test shall be the average of the strengths of two cylinders made from the same sample of concrete and tested at 28 days. The Contractor shall furnish all materials, labor, and facilities required for molding, curing, testing, and protecting test specimens at the site and in the laboratory.

1.3.1 Evaluation Sampling

Sampling, testing, and mixture proportioning shall be performed by a commercial Testing Laboratory, conforming with ASTM C 1077. The individuals who sample and test concrete and concrete constituents shall be certified as American Concrete Institute (ACI) Concrete Field Testing Technicians, Grade I. The individuals who perform the inspection of concrete shall be certified as ACI Concrete Construction Inspector, Level II. All mix design, weekly quality control reports, smoothness reports, and project certification reports shall be signed by a Registered Engineer.

1.3.2 Surface Testing

Surface testing for surface smoothness and plan grade shall be performed as indicated below by the Testing Laboratory. The measurements shall be properly referenced in accordance with paving lane identification and stationing, and a report given to the Government within 24 hours after measurement is made. A final report of surface testing, signed by a Registered Engineer, containing all surface measurements and a description of all actions taken to correct deficiencies, shall be provided to the Government upon conclusion of surface testing.

1.3.2.1 Surface Smoothness Requirements

The finished surfaces of the pavements shall have no abrupt change of 1/8 inch or more, and all pavements shall be within the tolerances specified in Table 1 when checked with the straightedge.

TABLE 1
STRAIGHTEDGE SURFACE SMOOTHNESS--PAVEMENTS

Pavement Category	Direction of Testing	Tolerances inches
Parking Areas,	Longitudinal	1/4
Dumpster Pad Areas	Transverse	1/4

1.3.2.2 Surface Smoothness Testing Method

The surface of the pavement shall be tested with the straightedge to identify all surface irregularities exceeding the tolerances specified above. The entire area of the pavement shall be tested in both a longitudinal and a transverse direction on parallel lines approximately 15 feet apart. The straightedge shall be held in contact with the surface and moved ahead one-half the length of the straightedge for each successive measurement. The amount of surface irregularity shall be determined by placing the straightedge on the pavement surface and allowing it to rest upon the two highest spots covered by its length and measuring the maximum gap between the straightedge and the pavement surface, in the area between these two high points.

1.3.3 Plan Grade Testing and Conformance

The finished surface of the pavements shall conform, within the tolerances shown in Table 1, to the lines, grades, and cross sections shown. The finished surface of new abutting pavements shall coincide at their juncture. The surfaces of other pavements shall vary not more than 0.06 foot above or below the plan grade line or elevation indicated. Each pavement category shall be checked by the Contractor for conformance with plan grade requirements by running lines of levels at intervals to determine the elevation at each joint intersection.

1.4 PRECONSTRUCTION TESTING OF MATERIALS

The Contractor shall not be entitled to any additional payment or extension of time because of delays caused by sampling and testing additional sources, or samples, necessitated by failure of any samples. Aggregates shall be sampled and tested by the Test Laboratory and shall be representative of the materials to be used for the project. Test results, signed by a Registered Engineer, shall be submitted 60 days before commencing paving. No aggregate shall be used unless test results show that it meets all requirements of these specifications, including compliance with ASTM C 33 and deleterious materials limitations.

1.5 SUBMITTALS

Government approval is required for submittals with a "G" designation; submittals not having a "G" designation are for information only. When used, a designation following the "G" designation identifies the office that will review the submittal for the Government. The following shall be submitted in accordance with Section 01330 SUBMITTAL PROCEDURES:

SD-03 Product Data

Equipment

Manufacturer's literature on the concrete plant; mixing equipment; hauling equipment; placing and finishing, and curing equipment; at least 7 days prior to start of paving.

Paving; G

Paving Schedules at least 7 days prior to start of paving.

Mixture Proportions; G

The report of the Contractor's mixture proportioning studies showing the proportions of all ingredients and supporting information on aggregate and other materials that will be used in the manufacture of concrete, at least 14 days prior to commencing concrete placing operations.

1.6 EQUIPMENT

1.6.1 Batching and Mixing

The batching plant shall conform to NRMCA CPMB 100, the equipment requirements in ASTM C 94/C 94M, and as specified. Water shall not be weighed or measured cumulatively with another ingredient. All concrete materials batching shall meet ASTM C 94/C 94M requirements. Mixers shall be stationary mixers or truck mixers. Batching, mixers, mixing time, permitted reduction of mixing time, and concrete uniformity shall meet the requirements of ASTM C 94/C 94M, and shall be documented in the initial weekly QC Report.

1.6.2 Transporting Equipment

Transporting equipment shall be in conformance with ASTM C 94/C 94M and as specified herein. Concrete shall be transported to the paving site in rear-dump trucks, in truck mixers designed with extra large blading and rear opening specifically for low slump concrete, or in agitators. Bottom-dump trucks shall not be used for delivery of concrete.

1.6.3 Delivery Equipment

When concrete transport equipment cannot operate on the paving lane, side-delivery transport equipment consisting of self-propelled moving conveyors shall be used to deliver concrete from the transport equipment and discharge it in front of the paver. Front-end loaders, dozers, or similar equipment shall not be used to distribute the concrete.

1.6.4 Nonrotating Pipe Float

A pipe float, if used, shall be a nonrotating pipe 6 to 10 inches in diameter and sufficiently long to span the full paving width when oriented at an angle of approximately 60 degrees with the centerline. The pipe float shall be mounted on a self-propelled frame that spans the paving lane. No means of applying water to the surface shall be incorporated in the pipe float.

1.6.5 Other Types of Finishing Equipment

Bridge deck finishers shall be used for pavements 10 inches or less in thickness, where longitudinal and transverse surface smoothness tolerances

are 1/4 inch or greater. Clary screeds or other rotating tube floats may be allowed on the project for small slabs and odd shaped slabs around structures.

1.6.6 Curing Equipment

Equipment for curing is specified in paragraph CURING.

1.6.7 Texturing Equipment

Texturing equipment shall be as specified below.

1.6.7.1 Fabric Drag

A fabric drag shall consist of a piece of fabric material as wide as the lane width securely attached to a separate wheel mounted frame spanning the paving lane or to one of the other similar pieces of equipment. The material shall be wide enough to provide 12 to 18 inches dragging flat on the pavement surface. The fabric material shall be clean, reasonably new burlap, kept clean and saturated during use.

1.6.7.2 Deep Texturing Equipment

Texturing equipment shall consist of a stiff bristled broom or a comb with spring wire tines forming a drag at least 4 feet long. This drag shall be mounted in a wheeled frame spanning the paving lane and constructed to mechanically pull the drag in a straight line across the paving lane perpendicular to the centerline.

1.6.8 Sawing Equipment

Equipment for sawing joints and for other similar sawing of concrete shall be standard diamond-tip-bladed concrete saws mounted on a wheeled chassis.

1.6.9 Straightedge

The Contractor shall furnish and maintain at the job site one 12 foot straightedge for testing concrete surface smoothness. The straightedge shall be constructed of aluminum or magnesium alloy and shall have blades of box or box-girder cross section with flat bottom, adequately reinforced to insure rigidity and accuracy. Straightedges shall have handles for operation on the pavement.

PART 2 PRODUCTS

2.1 CEMENTITIOUS MATERIALS

Cementitious materials shall be portland cement in combination with pozzolan and shall conform to appropriate specifications listed below.

2.1.1 Portland Cement

Portland cement shall conform to ASTM C 150 Type I or II, low-alkali.

2.1.2 Pozzolan (Fly Ash and Silica Fume)

Fly ash shall conform to ASTM C 618 Class F, including all the supplementary optional physical requirements. Fly ash shall conform to EPA requirements in accordance with Section 01670 RECYCLED / RECOVERED

MATERIALS.

2.1.2.1 Silica Fume

Silica fume shall conform to ASTM C 1240; available alkalies shall conform to the optimal limit given in Table 2. Silica fume may be furnished as a dry, densified material or as a slurry. The Contractor shall provide at his expense the services of a manufacturer's technical representative, experienced in mixing, proportioning, placement procedures, and curing of concrete containing silica fume. This representative shall be present on the project prior to and during at least the first 4 days of concreting using silica fume.

2.2 AGGREGATES

Aggregates shall consist of clean, hard, uncoated particles meeting the requirements of ASTM C 33, including deleterious materials, abrasion loss and soundness requirements of ASTM C 33, and other requirements specified herein. Aggregate not having a satisfactory demonstrable service record shall have a durability factor of 50 or more when subjected to freezing and thawing in concrete in accordance with ASTM C 666.

In addition to the grading requirements specified for coarse aggregate and for fine aggregate, the combined aggregate grading shall meet the following requirements.

a. If necessary, a blending aggregate shall be used to meet the required combined grading. This blending aggregate shall be batched separately. The combined grading of all aggregates used, in the proportions selected, shall be computed on the basis of cumulative percent retained on each sieve specified for fine and coarse aggregate.

b. The materials selected and the proportions used shall be such that when the Coarseness Factor (CF) and the Workability Factor (W) are plotted on a diagram as described in d. below, the point thus determined shall fall within the parallelogram described therein.

c. The Coarseness Factor (CF) shall be determined from the the following equation:

CF = (cumulative percent retained on the 3/8 in. sieve)(100)/(cumulative percent retained on the No. 8 sieve)

The Workability Factor (W) is defined as the cumulative percent passing the No. 8 sieve. However, W shall be adjusted, upwards only, by 2.5 percentage points for each 94 pounds of cementitious material per cubic yard greater than 564 pounds per cubic yard.

d. A diagram shall be plotted using a rectangular scale with W on the Y-axis with units from 20 (bottom) to 45 (top), and with CF on the X-axis with units from 80 (left side) to 30 (right side). On this diagram a parallelogram shall be plotted with corners at the following coordinates (CF-75, W-28), (CF-75, W-40), (CF-45, W-32.5), and (CF-45, W-41). If the point determined by the intersection of the computed CF and W does not fall within the above parallelogram, the grading of each size of aggregate used and the proportions selected shall be changed as necessary.

e. In addition, the individual percent retained on each sieve shall be plotted for the combined aggregate grading, on either rectangular or semi-log graph paper. The graph shall show a relative smooth transition between coarse and fine aggregate and shall have no major valleys or peaks in the area smaller than the No. 8 sieve. If this plot does not meet the above criteria, the grading of each size aggregate used and the proportions selected shall be changed as necessary.

2.2.1 Coarse Aggregate

Coarse aggregate shall consist of crushed gravel, crushed stone, or a combination thereof. The nominal maximum size of the coarse aggregate shall be 3/4 inches. When the nominal maximum size is greater than 1 inch, the aggregates shall be furnished in two ASTM C 33 size groups, No. 67 and No. 4. The amount of deleterious material in each size of coarse aggregate shall not exceed the limits shown in ASTM C 33 Class 1N, 4M or 4S, depending on the weathering region, and the following limits:

a. Lightweight particles 1.0 max. percent by mass (ASTM C 123).

b. Other soft particles 2.0 max. percent by mass (COE CRD-C 130).

c. Total of all deleterious 5.0 max. percent by mass (substances listed in ASTM C 33 and above, exclusive of material finer than No. 200 sieve).

d. The separation medium for lightweight particles shall have a density of Sp. Gr. of 2.0.

2.2.2 Fine Aggregate

Fine aggregate shall consist of natural sand, manufactured sand, or a combination of the two, and shall be composed of clean, hard, durable particles. All fine aggregate shall be composed of clean, hard, durable particles meeting the requirements of ASTM C 33 and the requirements herein. The amount of deleterious material in the fine aggregate shall not exceed the limits in ASTM C 33 and shall not exceed the following limits:

a. Lightweight particles (ASTM C 123) 1.0 percent max. by mass using a medium with a density of Sp. Gr. of 2.0.

b. The total of all deleterious material types, listed in ASTM C 33 and above, shall not exceed 3.0 percent of the mass of the fine aggregate.

2.3 CHEMICAL ADMIXTURES

Air-entraining admixture shall conform to ASTM C 260. An accelerator shall be used only when specified in paragraph SPECIFIED CONCRETE STRENGTH AND OTHER PROPERTIES and shall not be used to reduce the amount of cementitious material used. Accelerator shall conform to ASTM C 494/C 494M Type C. Calcium chloride and admixtures containing calcium chloride shall not be used. A water-reducing or retarding admixture shall meet the requirements of ASTM C 494/C 494M. Type G or H admixtures are not allowed.

2.4 CURING MATERIALS

Membrane forming curing compound shall be a white pigmented compound

conforming to ASTM C 309 Type 2. Burlap shall be new or shall be clean material never used for anything other than curing concrete.

2.5 WATER

Water for mixing and curing shall be clean, potable, and free of injurious amounts of oil, acid, salt, or alkali.

2.6 JOINT MATERIALS

2.6.1 Expansion Joint Material

Expansion joint filler shall be a preformed material conforming to ASTM D 1751. Expansion joint filler shall be 3/4 inch thick.

2.6.2 Slip Joint Material

Slip joint material shall be 1/4 inch thick expansion joint filler conforming to ASTM D 1751 or ASTM D 1752.

2.6.3 Contraction Joint Inserts

Sawable contraction joint inserts shall conform to COE CRD-C 540. Nonsawable contraction joint inserts shall have sufficient stiffness to permit placement in plastic concrete without deviation from a straight line and shall conform to the physical requirements of COE CRD-C 540, with the exception of resistance to sawing. Material for polyvinyl chloride inserts shall conform to COE CRD-C 572. No metal inserts of any kind shall be used.

2.7 REINFORCING

2.7.1 General

Reinforcing bars shall conform to ASTM A 615/A 615M billet steel Grade 60. Bar mats shall conform to ASTM A 184/A 184M. Reinforcement shall be free from loose, flaky rust, loose scale, oil, grease, mud, or other coatings that might reduce the bond with concrete.

2.7.2 Steel Fiber Reinforcing

Minimum ultimate tensile strength of the fibers shall be 50000 psi. The maximum aspect ratio (length divided by diameter) shall not exceed 100. Fibers longer than 2-1/2 inches shall not be used. The fibers shall be deformed and shall be furnished in small bundles adhered with water soluble glue.

2.8 DOWELS AND TIE BARS

2.8.1 Dowels

Dowels shall be single piece, plain (non-deformed) steel bars conforming to ASTM A 615/A 615M Grade 60 or higher. Dowels shall be free of loose, flaky rust and loose scale and shall be clean and straight.

2.8.2 Tie Bars

Tie bars shall be deformed steel bars conforming to ASTM A 615/A 615M Grade 60. Grade 60 or higher shall not be used for bars that are bent and straightened during construction.

2.9 EPOXY RESIN

All epoxy-resin materials shall be two-component materials conforming to ASTM C 881, Class as appropriate for each application temperature to be encountered; except, that in addition, the materials shall meet the following requirements:

a. Material for use for embedding dowels and anchor bolts shall be Type IV, Grade 3.

b. Material for use as patching for complete filling of spalls, wide cracks, and other voids and for use in preparing epoxy resin mortar shall be Type III, Grade as approved.

c. Material for injecting cracks shall be Type IV, Grade 1.

d. Material for bonding freshly mixed portland cement concrete, mortar, or freshly mixed epoxy resin concrete to hardened concrete shall be Type V, Grade as approved.

2.10 SPECIFIED CONCRETE STRENGTH AND OTHER PROPERTIES

Specified compressive strength, f'c, for concrete is 4000 psi at 28 days. Maximum allowable water-cementitious material ratio is 0.45. The water-cementitious material ratio is based on absolute volume equivalency, where the ratio is determined using the weight of cement for a cement only mix, or using the total volume of cement plus pozzolan converted to an equivalent weight of cement by the absolute volume equivalency method described in ACI 211.1. The concrete shall be air-entrained with a total air content of 5 plus or minus 1 percent. The maximum allowable slump of the concrete shall be 3 inches for pavement constructed with fixed forms. The strength of the concrete will be considered satisfactory so long as the average of all sets of three consecutive test results equals or exceeds the specified compressive strength f'c and no individual test result falls below the specified strength f'c by more than 500 psi. Additional analysis or testing, including taking cores and/or load tests may be required at the Contractor's expense when the strength of the concrete in the structure is considered potentially deficient.

2.11 MIXTURE PROPORTIONS

2.11.1 Composition Concrete

Composition concrete shall be composed of cementitious material, water, fine and coarse aggregates, and admixtures. Pozzolan, if used, shall consist of not less than 15 percent by mass of the total cementitious material. The total cementitious material content shall be at least 517 lb/cu yd. Admixtures shall consist of air entraining admixture and may also include accelerator, retarder, water-reducing admixture. High range water-reducing admixtures and admixtures to produce flowable concrete shall not be used. No substitutions shall be made in the materials used in the mixture proportions without additional tests to show that the quality of the concrete is satisfactory.

2.11.2 Concrete Mixture Proportioning Studies

Trial design batches, mixture proportioning studies, and testing shall be the responsibility of the Contractor, and shall be performed by the Test

Laboratory and signed by a Registered Engineer. No concrete pavement shall be placed until the Contracting Officer has approved the Contractor's mixture proportions. All materials used in mixture proportioning studies shall be representative of those proposed for use on the project. If there is a change in materials, additional mixture design studies shall be made using the new materials. Trial mixtures having proportions, slumps, and air content suitable for the work shall be based on methodology described in ACI 211.1. At least three different water-cementitious ratios, which will produce a range of strength encompassing that required on the project, shall be used. Laboratory trial mixtures shall be proportioned for maximum permitted slump and air content. Maximum sand content shall be 40 percent of the total aggregate SSD weight. Aggregate quantities shall be based on the mass in a saturated surface dry condition.

2.11.3 Mixture Proportioning Procedure

The Contractor shall perform the following:

a. Fabricate, cure and test 6 test cylinders per age for each mixture at 7 and 28 days.

b. Using the average strength for each w/(c+p), plot the results from each of the three mixtures on separate graphs for w/(c+p) versus 28-day strength.

c. From the graphs select a w/(c+p) which will produce a mixture giving a 28-day strength equal to the required strength determined in accordance with the following paragraph.

2.11.4 Average Strength Required for Mixtures

In order to ensure meeting, during production, the strength requirements specified, the mixture proportions selected shall produce a required average strength, f'cr, exceeding the specified strength, f'c, in accordance with procedures in Chapter 3 of ACI 301, "Proportioning."

PART 3 EXECUTION

3.1 CONDITIONING OF UNDERLYING MATERIAL

Underlying material, base course, upon which concrete is to be placed shall be clean, damp, and free from debris, waste concrete or cement, frost, ice, and standing or running water. After the underlying material has been prepared for concrete placement, no equipment shall be permitted thereon.

3.2 WEATHER LIMITATIONS

3.2.1 Hot Weather Paving

The temperature of concrete shall not exceed 90 degrees F. Steel forms, dowels and reinforcing shall be cooled prior to concrete placement when steel temperatures are greater than 120 degrees F.

3.2.2 Cold Weather Paving

The ambient temperature of the air at the placing site and the temperature of surfaces to receive concrete shall be not less 40 degrees F. The temperature of the concrete when placed shall be not less than 50 degrees F. Materials entering the mixer shall be free from ice, snow, or frozen

lumps. Salt, chemicals or other materials shall not be incorporated in the concrete to prevent freezing. Calcium chloride shall not be used at any time. Covering and other means shall be provided for maintaining the concrete at a temperature of at least 50 degrees F for not less than 72 hours after placing, and at a temperature above freezing for the remainder of the curing period. Pavement damaged by freezing shall be completely removed and replaced at the Contractor's expense as specified in paragraph, REPAIR, REMOVAL, AND REPLACEMENT OF SLABS.

3.3 CONCRETE PRODUCTION

3.3.1 General Requirements

Concrete shall be deposited in front of the paver within 45 minutes from the time cement has been charged into the mixing drum, except that if the ambient temperature is above 90 degrees F, the time shall be reduced to 30 minutes. Every load of concrete delivered to the paving site shall be accompanied by a batch ticket from the operator of the batching plant. Tickets shall show at least the mass, or volume, of all ingredients in each batch delivered, the water meter and revolution meter reading on truck mixers and the time of day. Tickets shall be delivered to the placing foreman who shall keep them on file and deliver them to the Government daily.

3.3.2 Transporting and Transfer-Spreading Operations

Non-agitating equipment shall be used only on smooth roads and for haul time less than 15 minutes. No equipment shall be allowed to operate on the prepared and compacted underlying material in front of the paver-finisher. Equipment shall be allowed to operate on the underlying material only if no damage is done to the underlying material and its degree of compaction. Any disturbance to the underlying material that does occur shall be corrected before the paver-finisher reaches the location of the disturbance and the equipment shall be replaced or procedures changed to prevent any future damage. Additional water may be added to truck mixers to bring the slump within the specified range provided the mixture water-cement ratio is not exceeded.

3.4 PAVING

Pavement shall be constructed with paving and finishing equipment utilizing fixed forms.

3.4.1 Consolidation

The paver vibrators shall be inserted into the concrete not closer to the underlying material than 2 inches. The vibrators or any tamping units in front of the paver shall be automatically controlled so that they shall be stopped immediately as forward motion ceases. Excessive vibration shall not be permitted. Concrete in small, odd-shaped slabs or in locations inaccessible to the paver mounted vibration equipment shall be vibrated with a hand-operated immersion vibrator. Vibrators shall not be used to transport or spread the concrete.

3.4.2 Operation

When the paver is operated between or adjacent to previously constructed pavement (fill-in lanes), provisions shall be made to prevent damage to the previously constructed pavement, including keeping the existing pavement

surface free of any debris, and placing rubber mats beneath the paver tracks. Transversely oscillating screeds and extrusion plates shall overlap the existing pavement the minimum possible, but in no case more than 8 inches.

3.4.3 Required Results

The paver-finisher shall be operated to produce a thoroughly consolidated slab throughout, true to line and grade within specified tolerances. The paver-finishing operation shall produce a surface finish free of irregularities, tears, voids of any kind, and any other discontinuities. It shall produce only a very minimum of paste at the surface. Multiple passes of the paver-finisher shall not be permitted. The equipment and its operation shall produce a finished surface requiring no hand finishing, other than the use of cutting straightedges, except in very infrequent instances. No water, other than true fog sprays (mist), shall be applied to the concrete surface during paving and finishing.

3.4.4 Fixed Form Paving

Forms shall be steel, except that wood forms may be used for curves having a radius of 150 feet or less, and for fillets. Forms may be built up with metal or wood, added only to the base, to provide an increase in depth of not more than 25 percent. The base width of the form shall be not less than eight-tenths of the vertical height of the form, except that forms 8 inches or less in vertical height shall have a base width not less than the vertical height of the form. Wood forms for curves and fillets shall be adequate in strength and rigidly braced. Forms shall be set on firm material cut true to grade so that each form section when placed will be firmly in contact with the underlying layer for its entire base. Forms shall not be set on blocks or on built-up spots of underlying material. Forms shall remain in place at least 12 hours after the concrete has been placed. Forms shall be removed without injuring the concrete.

3.4.5 Placing Reinforcing Steel

Reinforcement shall be positioned on suitable chairs securely fastened to the subgrade prior to concrete placement, or may be placed on an initial layer of consolidated concrete, with the subsequent layer placed within 30 minutes of the first layer placement.

3.4.6 Placing Dowels and Tie Bars

Dowels shall be installed with alignment not greater than 1/8 inch per ft. Except as otherwise specified below, location of dowels shall be within a horizontal tolerance of plus or minus 5/8 inch and a vertical tolerance of plus or minus 3/16 inch. The portion of each dowel intended to move within the concrete or expansion cap shall be painted with one coat of rust inhibiting primer paint, and then oiled just prior to placement. Dowels and tie bars in joints shall be omitted when the center of the dowel or tie bar is located within a horizontal distance from an intersecting joint equal to or less than one-fourth of the slab thickness.

3.4.6.1 Contraction Joints

Dowels and tie bars in longitudinal and transverse contraction joints within the paving lane shall be held securely in place by means of rigid metal basket assemblies. The dowels and tie bars shall be welded to the assembly or held firmly by mechanical locking arrangements that will

prevent them from becoming distorted during paving operations. The basket assemblies shall be held securely in the proper location by means of suitable anchors.

3.4.6.2 Construction Joints-Fixed Form Paving

Installation of dowels and tie bars shall be by the bonded-in-place method, supported by means of devices fastened to the forms. Installation by removing and replacing in preformed holes will not be permitted.

3.4.6.3 Dowels Installed in Hardened Concrete

Installation shall be by bonding the dowels into holes drilled into the hardened concrete. Holes approximately 1/8 inch greater in diameter than the dowels shall be drilled into the hardened concrete. Dowels shall be bonded in the drilled holes using epoxy resin injected at the back of the hole before installing the dowel and extruded to the collar during insertion of the dowel so as to completely fill the void around the dowel. Application by buttering the dowel shall not be permitted. The dowels shall be held in alignment at the collar of the hole, after insertion and before the grout hardens, by means of a suitable metal or plastic collar fitted around the dowel. The vertical alignment of the dowels shall be checked by placing the straightedge on the surface of the pavement over the top of the dowel and measuring the vertical distance between the straightedge and the beginning and ending point of the exposed part of the dowel. Where tie bars are required in longitudinal construction joints of slipform pavement, bent tie bars shall be installed at the paver, in front of the transverse screed or extrusion plate. If tie bars are required, a standard keyway shall be constructed, and the bent tie bars shall be inserted into the plastic concrete through a 26 gauge thick metal keyway liner. Tie bars shall not be installed in preformed holes. The keyway liner shall be protected and shall remain in place and become part of the joint. Before placement of the adjoining paving lane, the tie bars shall be straightened, without spalling the concrete around the bar.

3.4.6.4 Expansion Joints

Dowels in expansion joints shall be installed by the bonded-in-place method or by bonding into holes drilled in hardened concrete, using procedures specified above.

3.5 FINISHING

Clary screeds or "bridge deck" finishers equipment may be permitted. The sequence of machine operations shall be transverse finishing, longitudinal machine floating if used, straightedge finishing, texturing, and then edging of joints. Hand finishing shall be used only infrequently and only on isolated areas of odd slab shapes and in the event of a breakdown of the mechanical finishing equipment. Supplemental hand finishing for machine finished pavement shall be kept to an absolute minimum. Equipment to be used for supplemental hand finishing shall primarily be 10 to 12 feet cutting straightedges; only very sparing use of bull floats shall be allowed. At no time shall water be added to the surface of the slab in any way, except for fog (mist) sprays to prevent plastic shrinkage cracking.

3.5.1 Machine Finishing With Fixed Forms

The machine shall be designed to ride the forms. Machines that cause displacement of the forms shall be replaced. The machine shall make only

one pass over each area of pavement. If the equipment and procedures do not produce a surface of uniform texture, true to grade, in one pass, the operation shall be immediately stopped and the equipment, mixture, and procedures adjusted as necessary.

3.5.2 Surface Correction

While the concrete is still plastic, irregularities and marks in the pavement surface shall be eliminated by means of cutting straightedges, 10 to 12 feet in length. Depressions shall be filled with freshly mixed concrete, struck off, consolidated, and refinished. Projections above the required elevation shall also be struck off and refinished. Long-handled, flat "bull floats" shall be used sparingly and only as necessary to correct minor, scattered surface defects. Finishing with hand floats and trowels shall be held to the absolute minimum necessary. Joints and edges shall not be overfinished.

3.5.3 Hand Finishing

Hand finishing operations shall be used only for those unusual slabs as specified previously. Grate tampers (jitterbugs) shall not be used. As soon as placed and vibrated, the concrete shall be struck off and screeded. The surface shall be tamped with a strike-off and tamping screed, or vibratory screed. Immediately following the final tamping of the surface, the pavement shall be floated longitudinally. Long-handled, flat bull floats shall be used sparingly and only as necessary to correct surface defects. Finishing with hand floats and trowels shall be held to the absolute minimum necessary. Joints and edges shall not be overfinished. No water shall be added to the pavement during finishing operations.

3.5.4 Texturing

Before the surface sheen has disappeared and before the concrete hardens, the surface of the pavement shall be given a texture as described herein. Following initial texturing on the first day of placement, the Placing Foreman, Contracting Officer representative, and a representative of the Using Agency shall inspect the texturing for compliance with design requirements. After curing is complete, all textured surfaces shall be thoroughly power broomed to remove all debris. Any type of transverse texturing shall produce grooves in straight lines across each lane within a tolerance of plus or minus 1/2 inch of a true line.

3.5.4.1 Fabric-Drag Surface Finish

Surface texture shall be applied by dragging the surface of the pavement, in the direction of the concrete placement, with a moist fabric drag. The dragging shall produce a uniform finished surface having a fine sandy texture without disfiguring marks.

3.5.4.2 Broom Texturing

Surface texture shall be applied using a mechanical stiff bristle broom drag of a type that will uniformly score the surface transverse to the pavement center line. The broom shall be capable of traversing the full width of the pavement in a single pass at a uniform speed and with a uniform pressure. Successive passes of the broom shall be overlapped the minimum necessary to obtain a uniformly textured surface. The scores should be uniform in appearance and approximately 1/16 inch in depth but not more than 1/8 inch in depth. Hand brooming will be permitted only on

isolated odd shaped slabs or slabs where hand finishing is permitted.

3.5.5 Edging

After texturing has been completed, the edge of the slabs along the forms shall be carefully finished with an edging tool to form a smooth rounded surface of 1/8 inch radius. No water shall be added to the surface during edging.

3.6 CURING

Concrete shall be continuously protected against loss of moisture and rapid temperature changes for at least 7 days from the completion of finishing operations. Unhardened concrete shall be protected from rain and flowing water. During hot weather with low humidity and/or wind, the Contractor shall institute measures to prevent plastic shrinkage cracks from developing. ACI 305R contains means of predicting plastic shrinkage cracking and preventative measures. Plastic shrinkage cracks that occur shall be filled by injection of epoxy resin after the concrete hardens. Plastic shrinkage cracks shall never be troweled over or filled with slurry. Curing shall be accomplished by one of the following methods.

3.6.1 Membrane Curing

A uniform coating of white-pigmented membrane-forming curing compound shall be applied to the entire exposed surface of the concrete including pavement edges as soon as the free water has disappeared from the surface after finishing. If evaporation is high and no moisture is present on the surface even though bleeding has not stopped, fog sprays shall be used to keep the surface moist until setting of the cement occurs. Curing compound shall then be immediately applied. Curing compound shall be applied to the finished surfaces by means of a self-propelled automatic spraying machine, equipped with multiple spraying nozzles with wind shields, spaning the newly paved lane. The curing compound shall be applied at a maximum application rate of 200 square feet per gallon. The application of curing compound by hand-operated, mechanical powered pressure sprayers will be permitted only on odd widths or shapes of slabs where indicated and on concrete surfaces exposed by the removal of forms. The compound shall form a uniform, continuous, cohesive film that will not check, crack, or peel and that will be free from pinholes and other discontinuities. Areas where the curing compound develops the above defects or is damaged by heavy rainfall, sawing or other construction operations within the curing period, shall be immediately resprayed.

3.6.2 Moist Curing

Concrete to be moist-cured shall be maintained continuously wet for the entire curing period, commencing immediately after finishing. Surfaces shall be cured by ponding, by continuous sprinkling, by continuously saturated burlap or cotton mats, or by continuously saturated plastic coated burlap. Impervious sheet curing shall not be used.

3.7 JOINTS

No deviation from the jointing pattern shown on the drawings shall be made without written approval of the District C.O.E. Pavement Engineer, Geotechnical Engineer, or Contracting Officer. All joints shall be straight, perpendicular to the finished grade of the pavement, and continuous from edge to edge or end to end of the pavement with no abrupt

offset and no gradual deviation greater than 1/2 inch.

3.7.1 Longitudinal Construction Joints

Dowels shall be installed in the longitudinal construction joints, or the edges shall be thickened as indicated.

3.7.2 Transverse Construction Joints

Transverse construction joints shall be installed at a planned transverse joint, at the end of each day's placing operations and when concrete placement is interrupted. Transverse construction joints shall be constructed either by utilizing headers and hand placement and finishing techniques, or by placing concrete beyond the transverse construction joint location and then saw cutting full depth and removing concrete back to the transverse construction joint location. For the latter case, dowels shall be installed using methods for dowels installed in hardened concrete described above. All transverse construction joints shall be dowelled.

3.7.3 Expansion Joints

Expansion joints shall be formed where indicated, and about any structures and features that project through or into the pavement, using preformed joint filler of the type, thickness, and width indicated, and shall extend the full slab depth. Edges of the concrete at the joint face shall be edged. The joint filler strips shall be installed to form a recess at the pavement surface to be filled with joint sealant. Expansion joints shall be constructed with thickened edges for load transfer.

3.7.4 Slip Joints

Slip joints shall be installed the full depth of the slab using expansion joint preformed joint filler material attached to the face of the original concrete placement. A reservoir for joint sealant shall be constructed at the top of the joint. Edges of the joint face shall be edged.

3.7.5 Contraction Joints

Transverse and longitudinal contraction joints shall be of the weakened-plane or dummy type. Longitudinal contraction joints shall be constructed by sawing a groove in the hardened concrete with a power-driven saw. Transverse contraction joints shall be constructed in conformance with requirements for sawed joints.

3.7.5.1 Sawed Joints

Sawed contraction joints shall be constructed by sawing a groove in the concrete with a 1/8 inch blade to the indicated depth. The time of initial sawing shall vary depending on existing and anticipated weather conditions and shall be such as to prevent uncontrolled cracking of the pavement. Sawing of the joints shall commence as soon as the concrete has hardened sufficiently to permit cutting the concrete without chipping, spalling, or tearing. The joints shall be sawed at the required spacing consecutively in the sequence of the concrete placement. Sawing at a given joint location shall be discontinued when a crack develops ahead of the saw cut. Immediately after the joint is sawed, the saw cut and adjacent concrete surface shall be thoroughly flushed with water until all waste from sawing is removed from the joint. The surface shall be resprayed with curing compound as soon as free water disappears. The top of the joint opening

and the joint groove at exposed edges shall be tightly sealed with cord or backer rod before the concrete in the region of the joint is resprayed with curing compound.

3.7.6 Thickened Edge Joints

Underlying material in the transition area shall meet the requirements for smoothness and compaction specified for all other areas of the underlying material.

3.8 REPAIR, REMOVAL, AND REPLACEMENT OF SLABS

New pavement slabs that contain full-depth cracks shall be removed and replaced, as specified herein at no cost to the Government. Removal and replacement shall be full depth, shall be full width of the paving lane, and the limit of removal shall be from each original transverse joint . The Contracting Officer will determine whether cracks extend full depth of the pavement and may require minimum 6 inch diameter cores to be drilled on the crack to determine depth of cracking. Cores shall be drilled and the hole later filled by the Contractor with a well consolidated concrete mixture bonded to the walls of the hole with epoxy resin. Drilling of cores and refilling holes shall be at no expense to the Government. Cracks that do not extend full depth of slab shall be cleaned and then pressure injected with epoxy resin, Type IV, Grade 1. The Contractor shall ensure that the crack is not widened during epoxy resin injection. Where a full depth crack intersects the original transverse joint, the slab(s) containing the crack shall be removed and replaced, with dowels installed, as required below. Spalls along joints shall be repaired as specified.

3.8.1 Removal and Replacement of Full Slabs

Unless there are keys or dowels present, all edges of the slab shall be sawcut full depth. If keys, dowels, or tie bars are present along any edges, these edges shall be sawed full depth 6 inches from the edge if only keys are present, or just beyond the end of dowels or tie bars if they are present. These joints shall then be carefully sawed on the joint line to within 1 inch of the depth of the dowel or key. The main slab shall be further divided by sawing full depth, at appropriate locations, and each piece lifted out and removed. The narrow strips along keyed or doweled edges shall be carefully broken up and removed. Care shall be taken to prevent damage to the dowels, tie bars, or keys or to concrete to remain in place. Protruding portions of dowels shall be painted and lightly oiled. The joint face below keys or dowels shall be suitably trimmed so that there is no abrupt offset. If underbreak occurs at any point along any edge, the area shall be hand-filled with concrete, producing an even joint face from top to bottom, before replacing the removed slab. If underbreak over 4 inches deep occurs, the entire slab containing the underbreak shall be removed and replaced. Where there are no dowels, tie bars, or keys on an edge, or where they have been damaged, dowels of the size and spacing as specified for other joints in similar pavement shall be installed by epoxy grouting them into holes drilled into the existing concrete. Original damaged dowels or tie bars shall be cut off flush with the joint face. All four edges of the new slab shall thus contain dowels or original keys or original tie bars. Prior to placement of new concrete, the underlying material shall be graded and recompacted, and the surfaces of all four joint faces shall be cleaned of all loose material and contaminants, and coated with a double application of membrane forming curing compound as bond breaker. Placement of concrete shall be as specified for original construction. The resulting joints around the new slab shall be prepared

and sealed as specified.

3.8.2 Repairing Spalls Along Joints

Spalls along joints and cracks shall be repaired by first making a vertical saw cut at least 1 inch outside the spalled area and to a depth of at least 2 inches. Saw cuts shall be straight lines forming rectangular areas. The concrete between the saw cut and the joint, or crack, shall be chipped out to remove all unsound concrete. The cavity shall be thoroughly cleaned with high pressure water jets supplemented with compressed air to remove all loose material. Immediately before filling the cavity, a prime coat shall be applied to the dry cleaned surface of all sides and bottom of the cavity, except any joint face. The prime coat shall be applied in a thin coating and scrubbed into the surface with a stiff-bristle brush. Prime coat for portland cement repairs shall be a neat cement grout and for epoxy resin repairs shall be epoxy resin, Type III, Grade 1. The cavity shall be filled with low slump portland cement concrete or mortar, or with epoxy resin concrete or mortar. Portland cement concrete shall be used for larger spalls, those more than 1/3 cu. ft. in size after removal operations; portland cement mortar shall be used for spalls between 0.03 and 1/3 cu. ft; and epoxy resin mortar or Type III, Grade 3 epoxy resin for those spalls less than 0.03 cu. ft. in size after removal operations. Portland cement concretes and mortars shall be very low slump mixtures, proportioned, mixed, placed, tamped, and cured. Epoxy resin mortars shall be made with Type III, Grade 1, epoxy resin, using proportions, mixing, placing, tamping and curing procedures as recommended by the manufacturer. Any repair material on the surrounding surfaces of the existing concrete shall be removed before it hardens. Where the spalled area abuts a joint, an insert or other bond-breaking medium shall be used to prevent bond at the joint face. A reservoir for the joint sealant shall be sawed to the dimensions required for other joints.

3.8.3 Areas Defective in Plan Grade or Smoothness

In areas not meeting the specified limits for surface smoothness and plan grade, high areas shall be reduced to attain the required smoothness and grade, except as depth is limited below. High areas shall be reduced by grinding the hardened concrete with a surface grinding machine after the concrete is 14 days or more old. The depth of grinding shall not exceed 1/4 inch. All pavement areas requiring plan grade or surface smoothness corrections in excess of the specified limits, shall be removed and replaced. In pavement areas given a wire comb or tined texture, areas exceeding 25 square feet that have been corrected by rubbing or grinding shall be retextured by grooving machine sawn grooves meeting the requirements for the wire comb or tined texture. All areas in which grinding has been performed will be subject to the thickness tolerances specified in paragraph Thickness. Any grinding performed on individual slabs with excessive deficiencies shall be performed at the Contractor's own decision without entitlement to additional compensation if eventual removal of the slab is required.

3.9 EXISTING CONCRETE PAVEMENT REMOVAL AND REPAIR

Existing concrete pavement shall be removed as indicated and as specified in Section 02220 DEMOLITION modified, and expanded as specified herein. Removal, repair and replacement shall be made as indicated and as specified in paragraph REPAIR, REMOVAL, AND REPLACEMENT OR SLABS.

3.10 PAVEMENT PROTECTION

The Contractor shall protect the pavement against all damage prior to final acceptance of the work. Traffic shall be excluded from the new pavement. As a construction expedient in paving intermediate lanes between newly paved pilot lanes, operation of the hauling equipment will be permitted on the new pavement after the pavement has been cured for 7 days and the joints have been sealed or otherwise protected. All new and existing pavement carrying construction traffic or equipment shall be continuously kept completely clean. Special cleaning and care shall be used where Contractor's traffic uses or crosses active airfield pavement.

3.11 TESTING AND INSPECTION FOR CONTRACTOR QUALITY CONTROL (CQC)

Paragraph ACCEPTABILITY OF WORK contains additional CQC requirements. The Contractor shall perform the inspection and tests described below and, based upon the results of these inspections and tests, shall take the action required and submit reports as specified. When, in the opinion of the Contracting Officer, the paving operation is out of control, concrete placement shall cease.

3.11.1 Batch Plant Control

A daily report shall be prepared indicating checks made for scale accuracy with test weights, checks of batching accuracy, and corrective action taken prior to and during placement for weighing or batching, type and source of cement used, type and source of pozzolan or slag used, amount and source of admixtures used, aggregate source, the required aggregate and water masses per cubic yd, amount of water as free moisture in each size of aggregate, and the batch aggregate and water masses per cubic yd. for each class of concrete batched during each day's plant operation.

3.11.2 Concrete Mixture

a. Air Content Testing. Air content tests shall be made when test specimens are fabricated. In addition, at least two other tests for air content shall be made on randomly selected batches of each separate concrete mixture produced during each 8-hour period of paving. Whenever air content reaches specified limits, an immediate confirmatory test shall be made. If the second test also shows air content at or exceeding specified limits, an adjustment shall immediately be made in the amount of air-entraining admixture batched to bring air content within specified limits. If the next adjusted batch of concrete is not within specified limits, concrete placement shall be halted until concrete air content is within specified limits.

b. Slump Testing. Slump tests shall be made when test specimens are fabricated. Additional tests shall be made when excessive variation in workability is reported by the placing foreman or Government inspector. Whenever slump approaches the maximum limit, an adjustment shall immediately be made in the batch masses of water and fine aggregate, without exceeding the maximum w/(c+p). When a slump result exceeds the specification limit, no further concrete shall be delivered to the paving site until adjustments have been made and slump is again within the limit.

c. Temperature. The temperature of the concrete shall be measured when strength specimens are fabricated.

d. Concrete Strength Testing. Four (4) cylinders from the same batch shall be fabricated, cured and tested for compressive strength, testing two cylinders at 7-day and two cylinders at 28-day age. A minimum of one set of four (4) cylinders shall be fabricated, cured and tested for each shift of concrete placement. Control charts for strength, showing the 7-day and 28-day CQC compressive strengths, and the 28-day required compressive strength, shall be maintained and submitted with weekly CQC Reports.

3.11.3 Inspection Before Placing

Underlying materials, joint locations and types, construction joint faces, forms, reinforcing, dowels, and embedded items shall be inspected by a Registered Engineer in sufficient time prior to each paving operation in order to certify to the Contracting Officer that they are ready to receive concrete. The results of each inspection shall be reported in writing, and the certification signed by the Registered Engineer, prior to each days' paving.

3.11.4 Paving Operations

The placing foreman shall supervise all placing and paving operations, shall determine that the correct quality of concrete is placed in each location as shown, shall insure that the concrete is consolidated full depth and that finishing is performed as specified. The placing foreman shall be responsible for measuring and recording concrete temperatures and ambient temperature hourly during placing operations, weather conditions, time of placement, volume of concrete placed, and method of paving and any problems encountered.

3.11.5 Curing Inspection

a. Moist Curing Inspections. Each day on both work and non-work days, an inspection shall be made of all areas subject to moist curing. The surface moisture condition shall be noted and recorded. When any inspection finds an area of inadequate curing, immediate corrective action shall be taken, and the required curing period for the area shall be extended by 1 day.

b. Membrane Curing Inspection. At the end of each day's placement, the CQC Representative shall determine the quantity of compound used by measurement of the container; shall determine the area of concrete surface covered; shall then compute the rate of coverage in square feet per gallon and shall also note whether or not coverage is uniform. When the coverage rate of the curing compound is less than that specified or when the coverage is not uniform, the entire surface shall be sprayed again.

3.11.6 Cold-Weather Protection

At least once per day, an inspection shall be made of all areas subject to cold-weather protection. Any deficiencies shall be noted, corrected, and reported.

3.11.7 Reports

All results of tests or inspections conducted shall be reported informally as they are completed and in writing daily. A weekly report, signed by a registered engineer, shall be prepared for the updating of control charts

and test data, and all CQC inspections and actions covering the entire period from the start of the construction through the current week. Reports of failures and the action taken shall be confirmed in writing in the routine reports. The Contracting Officer has the right to examine all CQC records. A copy of weekly reports shall be faxed to the Norfolk District C.O.E. Pavement Engineer, Geotechnical Engineer, or Contract Officer. At the completion of concrete placement, a certification report shall be prepared containing mix designs, all updated control charts and concrete test data, quality control reports, smoothness reports, and other pertinent data on the concrete, with a certification by a registered engineer that the concrete placed meets all specification requirements. A copy of the certification report shall be mailed to the Design District pavement or Geotechnical Engineer.

-- End of Section --

SECTION 02760

FIELD MOLDED SEALANTS FOR SEALING JOINTS IN RIGID PAVEMENTS
03/97

PART 1 GENERAL

1.1 REFERENCES

The publications listed below form a part of this specification to the extent referenced. The publications are referred to in this text by the basic designation only.

AMERICAN SOCIETY FOR TESTING AND MATERIALS (ASTM)

ASTM C 509	(1994) Elastomeric Cellular Preformed Gasket and Sealing Material
ASTM D 789	(1998) Determination of Relative Viscosity and Moisture Content of Polyamide (PA)
ASTM D 5893	(1996) Cold Applied, Single Component Chemically Curing Silicon Joint Sealant for Portland Cement Concrete Pavement

1.2 SUBMITTALS

Government approval is required for submittals with a "G" designation; submittals not having a "G" designation are for information only. When used, a designation following the "G" designation identifies the office that will review the submittal for the Government. The following shall be submitted in accordance with Section 01330 SUBMITTAL PROCEDURES:

SD-03 Product Data

Manufacturer's Recommendations

Where installation procedures, or any part thereof, are required to be in accordance with the manufacturer's recommendations, printed copies of these recommendations, 30 days prior to use on the project. Installation of the material will not be allowed until the recommendations are received. Failure to furnish these recommendations can be cause for rejection of the material.

Equipment

List of proposed equipment to be used in performance of construction work including descriptive data, 30 days prior to use on the project.

SD-04 Samples

Products; G

Samples of the materials (sealant, primer if required, and backup material), in sufficient quantity for testing and approval

60 days prior to the beginning of work. No material will be allowed to be used until it has been approved.

1.3 TEST REQUIREMENTS

The joint sealant and backup or separating material shall be tested for conformance with the referenced applicable material specification. Testing of the materials shall be performed in an approved independent laboratory and certified copies of the test reports shall be submitted and approved 30 days prior to the use of the materials at the job site. Samples will be retained by the Government for possible future testing should the materials appear defective during or after application. Conformance with the requirements of the laboratory tests specified will not constitute final acceptance of the materials. Final acceptance will be based on the performance of the in-place materials.

1.4 EQUIPMENT

Machines, tools, and equipment used in the performance of the work required by this section shall be approved before the work is started and shall be maintained in satisfactory condition at all times.

1.4.1 Joint Cleaning Equipment

1.4.1.1 Tractor-Mounted Routing Tool

The routing tool used for removing old sealant from the joints shall be of such shape and dimensions and so mounted on the tractor that it will not damage the sides of the joints. The tool shall be designed so that it can be adjusted to remove the old material to varying depths as required. The use of V-shaped tools or rotary impact routing devices will not be permitted. Hand-operated spindle routing devices may be used to clean and enlarge random cracks.

1.4.1.2 Concrete Saw

A self-propelled power saw with water-cooled diamond or abrasive saw blades will be provided for cutting joints to the depths and widths specified or for refacing joints or cleaning sawed joints where sandblasting does not provide a clean joint.

1.4.1.3 Sandblasting Equipment

Sandblasting equipment shall include an air compressor, hose, and long-wearing venturi-type nozzle of proper size, shape and opening. The maximum nozzle opening should not exceed 1/4 inch. The air compressor shall be portable and shall be capable of furnishing not less than 150 cubic feet per minute and maintaining a line pressure of not less than 90 psi at the nozzle while in use. Compressor capability under job conditions must be demonstrated before approval. The compressor shall be equipped with traps that will maintain the compressed air free of oil and water. The nozzle shall have an adjustable guide that will hold the nozzle aligned with the joint approximately 1 inch above the pavement surface. The height, angle of inclination and the size of the nozzle shall be adjusted as necessary to secure satisfactory results.

1.4.1.4 Waterblasting Equipment

Waterblasting equipment shall include a trailer-mounted water tank, pumps,

high-pressure hose, wand with safety release cutoff control, nozzle, and auxiliary water resupply equipment. The water tank and auxiliary resupply equipment shall be of sufficient capacity to permit continuous operations. The nozzle shall have an adjustable guide that will hold the nozzle aligned with the joint approximately 1 inch above the pavement surface. The height, angle of inclination and the size of the nozzle shall be adjustable as necessary to obtain satisfactory results. A pressure gauge mounted at the pump shall show at all times the pressure in pounds per square inch at which the equipment is operating.

1.4.1.5 Hand Tools

Hand tools may be used, when approved, for removing defective sealant from a crack and repairing or cleaning the crack faces.

1.4.2 Sealing Equipment

1.4.2.1 Cold-Applied, Single-Component Sealing Equipment

The equipment for installing ASTM D 5893 single component joint sealants shall consist of an extrusion pump, air compressor, following plate, hoses, and nozzle for transferring the sealant from the storage container into the joint opening. The dimension of the nozzle shall be such that the tip of the nozzle will extend into the joint to allow sealing from the bottom of the joint to the top. The initially approved equipment shall be maintained in good working condition, serviced in accordance with the supplier's instructions, and shall not be altered in any way without obtaining prior approval. Small hand-held air-powered equipment (i.e., caulking guns) may be used for small applications.

1.5 TRIAL JOINT SEALANT INSTALLATION

Prior to the cleaning and sealing of the joints for the entire project, a test section of at least 200 feet long shall be prepared using the specified materials and approved equipment, so as to demonstrate the proposed joint preparation and sealing of all types of joints in the project. Following the completion of the test section and before any other joint is sealed, the test section shall be inspected to determine that the materials and installation meet the requirements specified. If it is determined that the materials or installation do not meet the requirements, the materials shall be removed, and the joints shall be recleaned and resealed at no cost to the Government. When the test section meets the requirements, it may be incorporated into the permanent work and paid for at the contract unit price per linear foot for sealing items scheduled. All other joints shall be prepared and sealed in the manner approved for sealing the test section.

1.6 DELIVERY AND STORAGE

Materials delivered to the job site shall be inspected for defects, unloaded, and stored with a minimum of handling to avoid damage. Storage facilities shall be provided by the Contractor at the job site for maintaining materials at the temperatures and conditions recommended by the manufacturer.

1.7 ENVIRONMENTAL CONDITIONS

The ambient air temperature and the pavement temperature within the joint wall shall be a minimum of 50 degrees F and rising at the time of

application of the materials. Sealant shall not be applied if moisture is observed in the joint.

PART 2 PRODUCTS

2.1 SEALANTS

Materials for sealing cracks in the various paved areas indicated on the drawings shall be as follows:

Area	Sealing Material
Project site (Trash Dumpster Pad)	ASTM D 5893

2.2 PRIMERS

Primers, when their use is recommended by the manufacturer of the sealant, shall be as recommended by the manufacturer of the sealant.

2.3 BACKUP MATERIALS

The backup material shall be a compressible, nonshrinking, nonstaining, nonabsorbing material and shall be nonreactive with the joint sealant. The material shall have a melting point at least 5 degrees F greater than the pouring temperature of the sealant being used when tested in accordance with ASTM D 789. The material shall have a water absorption of not more than 5 percent of the sample weight when tested in accordance with ASTM C 509. The backup material shall be 25 plus or minus 5 percent larger in diameter than the nominal width of the crack.

2.4 BOND BREAKING TAPES

The bond breaking tape or separating material shall be a flexible, nonshrinkable, nonabsorbing, nonstaining, and nonreacting adhesive-backed tape. The material shall have a melting point at least 5 degrees F greater than the pouring temperature of the sealant being used when tested in accordance with ASTM D 789. The bond breaker tape shall be approximately 1/8 inch wider than the nominal width of the joint and shall not bond to the joint sealant.

PART 3 EXECUTION

3.1 PREPARATION OF JOINTS

Immediately before the installation of the sealant, the joints shall be thoroughly cleaned to remove all laitance, curing compound, filler, protrusions of hardened concrete, and old sealant from the sides and upper edges of the joint space to be sealed.

3.1.1 Existing Sealant Removal

The in-place sealant shall be cut loose from both joint faces and to the depth shown on the drawings, using the tractor-mounted routing equipment, concrete saw, waterblaster as specified in paragraph EQUIPMENT. Depth shall be sufficient to accommodate any separating or backup material that is required to maintain the depth of new sealant to be installed. Prior to further cleaning operations, all loose old sealant remaining in the joint opening shall be removed by blowing with compressed air. Hand tools may be

required to remove sealant from random cracks. Chipping, spalling, or otherwise damaging the concrete will not be allowed.

3.1.2 Sawing

3.1.2.1 Refacing of Joints

Refacing or facing of joints shall be accomplished using a concrete saw as specified in paragraph EQUIPMENT to remove all residual old sealant and a minimum of concrete from the joint face to provide exposure of newly cleaned concrete, and, if required, to enlarge the joint opening to the width and depth shown on the drawings. The blade shall be stiffened with a sufficient number of suitable dummy (used) blades or washers. Immediately following the sawing operation, the joint opening shall be thoroughly cleaned using a water jet to remove all saw cuttings and debris.

3.1.3 Sandblasting

The newly exposed concrete joint faces and the pavement surfaces extending a minimum of 1/2 inch from the joint edges shall be sandblasted clean. A multiple-pass technique shall be used until the surfaces are free of dust, dirt, curing compound, filler, old sealant residue, or any foreign debris that might prevent the bonding of the sealant to the concrete. After final cleaning and immediately prior to sealing, the joints shall be blown out with compressed air and left completely free of debris and water.

3.1.4 Back-Up Material

When the joint opening is of a greater depth than indicated for the sealant depth, the lower portion of the joint opening shall be plugged or sealed off using a back-up material to prevent the entrance of the sealant below the specified depth. Care shall be taken to ensure that the backup material is placed at the specified depth and is not stretched or twisted during installation.

3.1.5 Bond Breaking Tape

Where inserts or filler materials contain bitumen, or the depth of the joint opening does not allow for the use of a backup material, a bond breaker separating tape will be inserted to prevent incompatibility with the filler materials and three-sided adhesion of the sealant. The tape shall be securely bonded to the bottom of the joint opening so it will not float up into the new sealant.

3.1.6 Rate of Progress of Joint Preparation

The stages of joint preparation which include sandblasting, air pressure cleaning and placing of the back-up material shall be limited to only that lineal footage that can be sealed during the same day.

3.2 PREPARATION OF SEALANT

3.2.1 Single-Component, Cold-Applied Sealants

The ASTM D 5893 sealant and containers shall be inspected prior to use. Any materials that contain water, hard caking of any separated constituents, nonreversible jell, or materials that are otherwise unsatisfactory shall be rejected. Settlement of constituents in a soft mass that can be readily and uniformly remixed in the field with simple

tools will not be cause for rejection.

3.3 INSTALLATION OF SEALANT

3.3.1 Time of Application

Joints shall be sealed immediately following final cleaning of the joint walls and following the placement of the separating or backup material. Open joints that cannot be sealed under the conditions specified, or when rain interrupts sealing operations shall be recleaned and allowed to dry prior to installing the sealant.

3.3.2 Sealing Joints

Immediately preceding, but not more than 50 feet ahead of the joint sealing operations, a final cleaning with compressed air shall be performed. The joints shall be filled from the bottom up to 1/8 inch plus or minus 1/16 inch below the pavement surface. Excess or spilled sealant shall be removed from the pavement by approved methods and shall be discarded. The sealant shall be installed in such a manner as to prevent the formation of voids and entrapped air. In no case shall gravity methods or pouring pots be used to install the sealant material. Traffic shall not be permitted over newly sealed pavement until authorized by the Contracting Officer. When a primer is recommended by the manufacturer, it shall be applied evenly to the joint faces in accordance with the manufacturer's instructions. Joints shall be checked frequently to ensure that the newly installed sealant is cured to a tack-free condition within the time specified.

3.3.3 Manufacturer's Recommendations

Contractor shall provide printed copies of manufacturers recommendations where installation procedures are required to be in accordance with the manufacturers recommendations.

3.4 INSPECTION

3.4.1 Joint Cleaning

Joints shall be inspected during the cleaning process to correct improper equipment and cleaning techniques that damage the concrete pavement in any manner. Cleaned joints shall be approved prior to installation of the separating or back-up material and joint sealant.

3.4.2 Joint Sealant Application Equipment

The application equipment shall be inspected to ensure conformance to temperature requirements, proper proportioning and mixing (if two-component sealant) and proper installation. Evidences of bubbling, improper installation, failure to cure or set shall be cause to suspend operations until causes of the deficiencies are determined and corrected.

3.4.3 Joint Sealant

The joint sealant shall be inspected for proper rate of cure and set, bonding to the joint walls, cohesive separation within the sealant, reversion to liquid, entrapped air and voids. Sealants exhibiting any of these deficiencies at any time prior to the final acceptance of the project shall be removed from the joint, wasted, and replaced as specified herein

at no additional cost to the Government.

3.5 CLEAN-UP

Upon completion of the project, all unused materials shall be removed from the site and the pavement shall be left in a clean condition.

-- End of Section --

SECTION 02763

PAVEMENT MARKINGS
04/01

PART 1 GENERAL

1.1 REFERENCES

The publications listed below form a part of this specification to the extent referenced. The publications are referred to in the text by basic designation only.

AMERICAN ASSOCIATION OF STATE HIGHWAY AND TRANSPORTATION OFFICIALS (AASHTO)

AASHTO M 247	(1981; R 1996) Glass Beads Used in Traffic Paint

AMERICAN SOCIETY FOR TESTING AND MATERIALS (ASTM)

ASTM D 792	(1998) Density and Specific Gravity (Relative Density) of Plastics by Displacement
ASTM D 4505	(1996) Preformed Plastic Pavement Marking Tape for Extended Service Life
ASTM E 28	(1999) Softening Point of Resins by Ring and Ball Apparatus

U.S. GENERAL SERVICES ADMINISTRATION (GSA)

FS TT-B-1325	(Rev C; Notice 1; Canc. Notice 2) Beads (Glass Spheres) Retro-Reflective (Metric)
FS TT-P-1952	(Rev D; Canc. Notice 1) Paint, Traffic and Airfield Marking, Waterborne (Metric)

1.2 SUBMITTALS

Government approval is required for submittals with a "G" designation; submittals not having a "G" designation are for information only. When used, a designation following the "G" designation identifies the office that will review the submittal for the Government. The following shall be submitted in accordance with Section 01330 SUBMITTAL PROCEDURES:

SD-03 Product Data

Equipment

Lists of proposed equipment, including descriptive data, and notifications of proposed Contractor actions as specified in this section. List of removal equipment shall include descriptive data indicating area of coverage per pass, pressure adjustment range, tank and flow capacities, and safety precautions required for the

equipment operation.

Composition Requirements

Manufacturer's current printed product description and Material Safety Data Sheets (MSDS) for each type paint/color proposed for use.

SD-06 Test Reports

Sampling and Testing

Certified copies of the test reports, prior to the use of the materials at the jobsite. Testing shall be performed in an approved independent laboratory.

SD-07 Certificates

Volatile Organic Compound (VOC)

Certificate stating that the proposed pavement marking paint meets the VOC regulations of the local Air Pollution Control District having jurisdiction over the geographical area in which the project is located.

1.3 DELIVERY AND STORAGE

All materials shall be delivered and stored in sealed containers that plainly show the designated name, formula or specification number, batch number, color, date of manufacture, manufacturer's name, and directions, all of which shall be plainly legible at time of use.

1.4 EQUIPMENT

All machines, tools and equipment used in the performance of the work shall be approved and maintained in satisfactory operating condition. Equipment operating on roads shall display low speed traffic markings and traffic warning lights.

1.4.1 Paint Application Equipment

The equipment to apply paint to pavements shall be a self-propelled or mobile-drawn pneumatic spraying machine with suitable arrangements of atomizing nozzles and controls to obtain the specified results. The machine shall have a speed during application not less than 5 mph, and shall be capable of applying the stripe widths indicated, at the paint coverage rate specified in paragraph APPLICATION, and of even uniform thickness with clear-cut edges. Equipment used for marking streets shall be capable of placing the prescribed number of lines at a single pass as solid lines, intermittent lines or a combination of solid and intermittent lines using a maximum of two different colors of paint as specified. The paint applicator shall have paint reservoirs or tanks of sufficient capacity and suitable gauges to apply paint in accordance with requirements specified. Tanks shall be equipped with suitable air-driven mechanical agitators. The spray mechanism shall be equipped with quick-action valves conveniently located, and shall include necessary pressure regulators and gauges in full view and reach of the operator. Paint strainers shall be installed in paint supply lines to ensure freedom from residue and foreign matter that may cause malfunction of the spray guns. The paint applicator

shall be readily adaptable for attachment of an air-actuated dispenser for the reflective media approved for use. Pneumatic spray guns shall be provided for hand application of paint in areas where the mobile paint applicator cannot be used.

1.4.2 Thermoplastic Application Equipment

1.4.2.1 Thermoplastic Material

Thermoplastic material shall be applied to the primed pavement surface by spray techniques or by the extrusion method, wherein one side of the shaping die is the pavement and the other three sides are contained by, or are part of, suitable equipment for heating and controlling the flow of material. By either method, the markings shall be applied with equipment that is capable of providing continuous uniformity in the dimensions of the stripe.

1.4.2.2 Application Equipment

a. Application equipment shall provide continuous mixing and agitation of the material. Conveying parts of the equipment between the main material reservoir and the extrusion shoe or spray gun shall prevent accumulation and clogging. All parts of the equipment which come into contact with the material shall be easily accessible and exposable for cleaning and maintenance. All mixing and conveying parts up to and including the extrusion shoes and spray guns shall maintain the material at the required temperature with heat-transfer oil or electrical-element-controlled heat.

b. The application equipment shall be constructed to ensure continuous uniformity in the dimensions of the stripe. The applicator shall provide a means for cleanly cutting off stripe ends squarely and shall provide a method of applying "skiplines". The equipment shall be capable of applying varying widths of traffic markings.

c. The applicator shall be equipped with a drop-on type bead dispenser capable of uniformly dispensing reflective glass spheres at controlled rates of flow. The bead dispenser shall be automatically operated and shall begin flow prior to the flow of composition to assure that the strip is fully reflectorized.

1.4.2.3 Mobile and Maneuverable

Application equipment shall be mobile and maneuverable to the extent that straight lines can be followed and normal curves can be made in a true arc. The equipment used for the placement of thermoplastic pavement markings shall be of two general types: mobile applicator and portable applicator.

a. Mobile Application Equipment: The mobile applicator shall be defined as a truck-mounted, self-contained pavement marking machine that is capable of hot applying thermoplastic by either the extrusion or spray method. The unit shall be equipped to apply the thermoplastic marking material at temperatures exceeding 375 degrees F, at widths varying from 3 to 12 inches and in thicknesses varying from 0.020 to 0.190 inch and shall have an automatic drop-on bead system. The mobile unit shall be capable of operating continuously and of installing a minimum of 20,000 lineal feet of longitudinal markings in an 8-hour day.

(1) The mobile unit shall be equipped with a melting kettle which

holds a minimum of 6000 pounds of molten thermoplastic material. The kettle shall be capable of heating the thermoplastic composition to temperatures of 375 to 425 degrees F. A thermostatically controlled heat transfer liquid shall be used. Heating of the composition by direct flame will not be allowed. Oil and material temperature gauges shall be visible at both ends of the kettle. The mobile unit shall be equipped with a spray gun system. The spray system shall consist of a minimum of four spray guns, located two on each side of the truck, and shall be capable of marking simultaneous edgeline and centerline stripes. The spray system shall be surrounded (jacketed) with heating oil to maintain the molten thermoplastic at a temperature of 375 to 425 degrees F; and shall be capable of spraying a stripe of 3 to 12 inches in width, and in thicknesses varying from 0.055 inch to 0.095 inch, and of generally uniform cross section.

(2) The mobile unit shall be equipped with an electronic programmable line pattern control system. The control system shall be capable of applying skip or solid lines in any sequence, through any and all of the extrusion shoes, or the spray guns, and in programmable cycle lengths. In addition, the mobile unit shall be equipped with an automatic counting mechanism capable of recording the number of lineal feet of thermoplastic markings applied to the pavement surface with an accuracy of 0.5 percent.

b. Portable Application Equipment: The portable applicator shall be defined as hand-operated equipment, specifically designed for placing special markings such as crosswalks, stopbars, legends, arrows, and short lengths of lane, edge and centerlines. The portable applicator shall be capable of applying thermoplastic pavement markings by the extrusion method. The portable applicator shall be loaded with hot thermoplastic composition from the melting kettles on the mobile applicator. The portable applicator shall be equipped with all the necessary components, including a materials storage reservoir, bead dispenser, extrusion shoe, and heating accessories, so as to be capable of holding the molten thermoplastic at a temperature of 375 to 425 degrees F, of extruding a line of 3 to 12 inches in width, and in thicknesses of not less than 0.125 inch nor more than 0.190 inch and of generally uniform cross section.

1.4.3 Reflective Media Dispenser

The dispenser for applying the reflective media shall be attached to the paint dispenser and shall operate automatically and simultaneously with the applicator through the same control mechanism. The dispenser shall be capable of adjustment and designed to provide uniform flow of reflective media over the full length and width of the stripe at the rate of coverage specified in paragraph APPLICATION, at all operating speeds of the applicator to which it is attached.

1.4.4 Preformed Tape Application Equipment

Mechanical application equipment shall be used for the placement of preformed marking tape. Mechanical application equipment shall be defined as a mobile pavement marking machine specifically designed for use in applying precoated, pressure-sensitive pavement marking tape of varying widths, up to 12 inches. The applicator shall be equipped with rollers, or other suitable compactive device, to provide initial adhesion of the preformed, pressure-sensitive marking tape with the pavement surface. Additional hand-operated rollers shall be used as required to properly seat the thermoplastic tape.

1.4.5 Surface Preparation Equipment

1.4.5.1 Sandblasting Equipment

Sandblasting equipment shall include an air compressor, hoses, and nozzles of proper size and capacity as required for cleaning surfaces to be painted. The compressor shall be capable of furnishing not less than 150 cfm of air at a pressure of not less than 90 psi at each nozzle used, and shall be equipped with traps that will maintain the compressed air free of oil and water.

1.4.5.2 Waterblast Equipment

The water pressure shall be specified at 2600 psi at 140 degrees F in order to adequately clean the surfaces to be marked.

1.4.6 Marking Removal Equipment

Equipment shall be mounted on rubber tires and shall be capable of removing markings from the pavement without damaging the pavement surface or joint sealant. Waterblasting equipment shall be capable of producing an adjustable, pressurized stream of water. Sandblasting equipment shall include an air compressor, hoses, and nozzles. The compressor shall be equipped with traps to maintain the air free of oil and water.

1.4.6.1 Chemical Equipment

Chemical equipment shall be capable of application and removal of chemicals from the pavement surface, and shall leave only non-toxic biodegradeable residue.

1.4.7 Traffic Controls

Suitable warning signs shall be placed near the beginning of the worksite and well ahead of the worksite for alerting approaching traffic from both directions. Small markers shall be placed along newly painted lines or freshly placed raised markers to control traffic and prevent damage to newly painted surfaces or displacement of raised pavement markers. Painting equipment shall be marked with large warning signs indicating slow-moving painting equipment in operation.

1.5 HAND-OPERATED, PUSH-TYPE MACHINES

All machines, tools, and equipment used in performance of the work shall be approved and maintained in satisfactory operating condition. Hand-operated push-type machines of a type commonly used for application of paint to pavement surfaces will be acceptable for marking small streets and parking areas. Applicator machine shall be equipped with the necessary paint tanks and spraying nozzles, and shall be capable of applying paint uniformly at coverage specified. Sandblasting equipment shall be provided as required for cleaning surfaces to be painted. Hand-operated spray guns shall be provided for use in areas where push-type machines cannot be used.

1.6 MAINTENANCE OF TRAFFIC

1.6.1 Roads, Streets, and Parking Areas

When traffic must be rerouted or controlled to accomplish the work, the

necessary warning signs, flagpersons, and related equipment for the safe passage of vehicles shall be provided.

1.7 WEATHER LIMITATIONS FOR REMOVAL

Pavement surface shall be free of snow, ice, or slush. Surface temperature shall be at least 40 degrees F and rising at the beginning of operations, except those involving shot or sand blasting. Operation shall cease during thunderstorms. Operation shall cease during rainfall, except for waterblasting and removal of previously applied chemicals. Waterblasting shall cease where surface water accumulation alters the effectiveness of material removal.

PART 2 PRODUCTS

2.1 PAINT

The paint shall be homogeneous, easily stirred to smooth consistency, and shall show no hard settlement or other objectionable characteristics during a storage period of 6 months. Paints for airfields, roads, and streets shall conform to FS TT-P-1952, color as indicated. Pavement marking paints shall comply with applicable state and local laws enacted to ensure compliance with Federal Clean Air Standards. Paint materials shall conform to the restrictions of the local Air Pollution Control District.

2.2 THERMOPLASTIC COMPOUNDS

The thermoplastic reflectorized pavement marking compound shall be extruded or sprayed in a molten state onto a primed pavement surface. Following a surface application of glass beads and upon cooling to normal pavement temperatures, the marking shall be an adherent reflectorized strip of the specified thickness and width that is capable of resisting deformation by traffic.

2.2.1 Composition Requirements

The binder component shall be formulated as a hydrocarbon resin. The pigment, beads and filler shall be uniformly dispersed in the binder resin. The thermoplastic composition shall be free from all skins, dirt, and foreign objects and shall comply with the following requirements:

	Percent by Weight	
Component	White	Yellow
Binder	17 min.	17 min.
Titanium dioxide	10 min.	-
Glass beads,	20 min.	20 min.
Calcium carbonate & inert fillers	49 max.	*
Yellow pigments	-	*

*Amount and type of yellow pigment, calcium carbonate and inert fillers

shall be at the option of the manufacturer, providing the other composition requirements of this specification are met.

2.2.2 Physical Properties

2.2.2.1 Color

The color shall be as indicated.

2.2.2.2 Drying Time

When installed at 70 degrees F and in thicknesses between 1/8 and 3/16 inch, the composition shall be completely solid and shall show no damaging effect from traffic after curing 15 minutes.

2.2.2.3 Softening Point

The composition shall have a softening point of not less than 194 degrees F when tested in accordance with ASTM E 28.

2.2.2.4 Specific Gravity

The specific gravity of the composition shall be between 1.9 and 2.2 as determined in accordance with ASTM D 792.

2.2.3 Asphalt Concrete Primer

The primer for asphalt concrete pavements shall be a thermosetting adhesive with a solids content of pigment reinforced synthetic rubber and synthetic plastic resin dissolved and/or dispersed in a volatile organic compound (VOC). Solids content shall not be less than 10 percent by weight at 70 degrees F and 60 percent relative humidity. A wet film thickness of 0.005 inch plus or minus 0.001 inch, shall dry to a tack-free condition in less than 5 minutes.

2.2.4 Portland Cement Concrete Primer

The primer for Portland cement concrete pavements shall be an epoxy resin primer. The primer shall be of the type recommended by the manufacturer of the thermoplastic composition. Epoxy primers recommended by the manufacturer shall be approved by the Contracting Officer prior to use. Requests for approval shall be accompanied with technical data, instructions for use, and a 1 quart sample of the primer material.

2.3 PREFORMED TAPE

The preformed tape shall be an adherent reflectorized strip in accordance with ASTM D 4505 Type I or IV, Class optional.

2.4 REFLECTIVE MEDIA

Reflective media for airfields shall conform to FS TT-B-1325, Type I, Gradation A. Reflective media for roads and streets shall conform to FS TT-B-1325, Type I, Gradation A or AASHTO M 247, Type I.

2.5 SAMPLING AND TESTING

Materials proposed for use shall be stored on the project site in sealed and labeled containers, or segregated at source of supply, sufficiently in

advance of needs to allow 60 days for testing. Upon notification by the Contractor that the material is at the site or source of supply, a sample shall be taken by random selection from sealed containers by the Contractor in the presence of a representative of the Contracting Officer. Samples shall be clearly identified by designated name, specification number, batch number, manufacturer's formulation number, project contract number, intended use, and quantity involved. Testing shall be performed in an approved independent laboratory. If materials are approved based on reports furnished by the Contractor, samples will be retained by the Government for possible future testing should the material appear defective during or after application.

PART 3 EXECUTION

3.1 SURFACE PREPARATION

Surfaces to be marked shall be thoroughly cleaned before application of the pavement marking material. Dust, dirt, and other granular surface deposits shall be removed by sweeping, blowing with compressed air, rinsing with water or a combination of these methods as required. Rubber deposits, surface laitance, existing paint markings, and other coatings adhering to the pavement shall be completely removed with scrapers, wire brushes, sandblasting, approved chemicals, or mechanical abrasion as directed. Areas of old pavement affected with oil or grease shall be scrubbed with several applications of trisodium phosphate solution or other approved detergent or degreaser, and rinsed thoroughly after each application. After cleaning, oil-soaked areas shall be sealed with cut shellac to prevent bleeding through the new paint. Pavement surfaces shall be allowed to dry, when water is used for cleaning, prior to striping or marking. Surfaces shall be recleaned, when work has been stopped due to rain.

3.1.1 Pretreatment for Early Painting

Where early painting is required on rigid pavements, a pretreatment with an aqueous solution containing 3 percent phosphoric acid and 2 percent zinc chloride shall be applied to prepared pavement areas prior to painting.

3.1.2 Cleaning Existing Pavement Markings

In general, markings shall not be placed over existing pavement marking patterns. Existing pavement markings, which are in good condition but interfere or conflict with the newly applied marking patterns, shall be removed. Deteriorated or obscured markings that are not misleading or confusing or interfere with the adhesion of the new marking material do not require removal. New preformed and thermoplastic pavement markings shall not be applied over existing preformed or thermoplastic markings. Whenever grinding, scraping, sandblasting or other operations are performed the work must be conducted in such a manner that the finished pavement surface is not damaged or left in a pattern that is misleading or confusing. When these operations are completed the pavement surface shall be blown off with compressed air to remove residue and debris resulting from the cleaning work.

3.1.3 Cleaning Concrete Curing Compounds

On new Portland cement concrete pavements, cleaning operations shall not begin until a minimum of 30 days after the placement of concrete. All new concrete pavements shall be cleaned by either sandblasting or water blasting. When water blasting is performed, thermoplastic and preformed

markings shall be applied no sooner than 24 hours after the blasting has been completed. The extent of the blasting work shall be to clean and prepare the concrete surface as follows:

a. There is no visible evidence of curing compound on the peaks of the textured concrete surface.

b. There are no heavy puddled deposits of curing compound in the valleys of the textured concrete surface.

c. All remaining curing compound is intact; all loose and flaking material is removed.

d. The peaks of the textured pavement surface are rounded in profile and free of sharp edges and irregularities.

e. The surface to be marked is dry.

3.2 APPLICATION

All pavement markings and patterns shall be placed as shown on the plans.

3.2.1 Paint

Paint shall be applied to clean, dry surfaces, and only when air and pavement temperatures are above 40 degrees F and less than 95 degrees F. Paint temperature shall be maintained within these same limits. New asphalt pavement surfaces and new Portland concrete cement shall be allowed to cure for a period of not less than 30 days before applications of paint. Paint shall be applied pneumatically with approved equipment at rate of coverage specified . The Contractor shall provide guide lines and templates as necessary to control paint application. Special precautions shall be taken in marking numbers, letters, and symbols. Edges of markings shall be sharply outlined.

3.2.1.1 Rate of Application

a. Reflective Markings: Pigmented binder shall be applied evenly to the pavement area to be coated at a rate of 105 plus or minus 5 square feet per gallon. Glass spheres shall be applied uniformly to the wet paint on road and street pavement at a rate of 6 plus or minus 0.5 pounds of glass spheres per gallon of paint.

b. Nonreflective Markings: Paint shall be applied evenly to the pavement surface to be coated at a rate of 105 plus or minus 5 square feet per gallon.

3.2.1.2 Drying

The maximum drying time requirements of the paint specifications will be strictly enforced to prevent undue softening of bitumen, and pickup, displacement, or discoloration by tires of traffic. If there is a delay in drying of the markings, painting operations shall be discontinued until cause of the slow drying is determined and corrected.

3.2.2 Thermoplastic Compounds

Thermoplastic pavement markings shall be placed upon dry pavement; surface dry only will not be considered an acceptable condition. At the time of

installation, the pavement surface temperature shall be a minimum of 40 degrees F and rising. Thermoplastics, as placed, shall be free from dirt or tint.

3.2.2.1 Longitudinal Markings

All centerline, skipline, edgeline, and other longitudinal type markings shall be applied with a mobile applicator. All special markings, crosswalks, stop bars, legends, arrows, and similar patterns shall be placed with a portable applicator, using the extrusion method.

3.2.2.2 Primer

After surface preparation has been completed the asphalt and/or concrete pavement surface shall be primed. The primer shall be applied with spray equipment. Primer materials shall be allowed to "set-up" prior to applying the thermoplastic composition. The asphalt concrete primer shall be allowed to dry to a tack-free condition, usually occurring in less than 10 minutes. The Portland cement concrete primer shall be allowed to dry in accordance with the thermoplastic manufacturer's recommendations. To shorten the curing time of the epoxy resins an infrared heating device may be used on the concrete primer.

a. Asphalt Concrete Primer: Primer shall be applied to all asphalt concrete pavements at a wet film thickness of 0.005 inch, plus or minus 0.001 inch (265-400 square feet per gallon).

b. Portland Cement Concrete Primer: Primer shall be applied to all concrete pavements (including concrete bridge decks) at a wet film thickness of between 0.04 to 0.05 inch (320-400 square feet per gallon).

3.2.2.3 Markings

After the primer has "set-up", the thermoplastic shall be applied at temperatures no lower than 375 degrees F nor higher than 425 degrees F at the point of deposition. Immediately after installation of the marking, drop-on glass spheres shall be mechanically applied so that the spheres are held by and imbedded in the surface of the molten material.

a. Extruded Markings: All extruded thermoplastic markings shall be applied at the specified width and at a thickness of not less than 0.125 inch nor more than 0.190 inch.

b. Sprayed Markings: All sprayed thermoplastic markings shall be applied at the specified width and the thicknesses designated in the contract plans. If the plans do not specify a thickness, centerline markings shall be applied at a wet thickness of 0.090 inch, plus or minus 0.005 inch, and edgeline markings at a wet thickness of 0.060 inch, plus or minus 0.005 inch.

c. Reflective Glass Spheres: Immediately following application, reflective glass spheres shall be dropped onto the molten thermoplastic marking at the rate of 1 pound per 20 square feet of compound.

3.2.3 Preformed Tape

The pavement surface temperature shall be a minimum of 60 degrees F and the ambient temperature shall be a minimum of 60 degrees F and rising. The preformed markings shall be placed in accordance with the manufacturer's

written instructions.

3.2.4 Reflective Media

Application of reflective media shall immediately follow application of pigmented binder. Drop-on application of glass spheres shall be accomplished to insure that reflective media is evenly distributed at the specified rate of coverage. Should there be malfunction of either paint applicator or reflective media dispenser, operations shall be discontinued immediately until deficiency is corrected.

3.3 MARKING REMOVAL

Pavement marking, including plastic tape, shall be removed in the areas shown on the drawings. Removal of marking shall be as complete as possible without damage to the surface. Aggregate shall not be exposed by the removal process. After the markings are removed, the cleaned pavement surfaces shall exhibit adequate texture for remarking as specified in paragraph SURFACE PREPARATION. Contractor shall demonstrate removal of pavement marking in an area designated by the Contracting Officer. The demonstration area will become the standard for the remainder of the work.

3.3.1 Equipment Operation

Equipment shall be controlled and operated to remove markings from the pavement surface, prevent dilution or removal of binder from underlying pavement, and prevent emission of blue smoke from asphalt or tar surfaces.

3.3.2 Cleanup and Waste Disposal

The worksite shall be kept clean of debris and waste from the removal operations. Cleanup shall immediately follow removal operations in areas subject to air traffic. Debris shall be disposed of at approved sites.

-- End of Section --

SECTION 02770

CONCRETE SIDEWALKS AND CURBS AND GUTTERS
03/98

PART 1 GENERAL

1.1 REFERENCES

The publications listed below form a part of this specification to the extent referenced. The publications are referred to in the text by basic designation only.

AMERICAN ASSOCIATION OF STATE HIGHWAY AND TRANSPORTATION OFFICIALS (AASHTO)

AASHTO M 182	(1991) Burlap Cloth Made from Jute or Kenaf

AMERICAN SOCIETY FOR TESTING AND MATERIALS (ASTM)

ASTM A 185	(1997) Steel Welded Wire Fabric, Plain, for Concrete Reinforcement
ASTM A 615/A 615M	(1996a) Deformed and Plain Billet-Steel Bars for Concrete Reinforcement
ASTM A 616/A 616M	(1996a) Rail-Steel Deformed and Plain Bars for Concrete Reinforcement
ASTM A 617/A 617M	(1996a) Axle-Steel Deformed and Plain Bars for Concrete Reinforcement
ASTM C 31/C 31M	(1996) Making and Curing Concrete Test Specimens in the Field
ASTM C 143	(1990a) Slump of Hydraulic Cement Concrete
ASTM C 171	(1997) Sheet Materials for Curing Concrete
ASTM C 172	(1997) Sampling Freshly Mixed Concrete
ASTM C 173	(1996) Air Content of Freshly Mixed Concrete by the Volumetric Method
ASTM C 231	(1997) Air Content of Freshly Mixed Concrete by the Pressure Method
ASTM C 309	(1997) Liquid Membrane-Forming Compounds for Curing Concrete
ASTM C 920	(1995) Elastomeric Joint Sealants
ASTM D 1751	(1983; R 1991) Preformed Expansion Joint Filler for Concrete Paving and Structural Construction (Nonextruding and Resilient Bituminous Types)

ASTM D 1752	(1984; R 1996) Preformed Sponge Rubber and Cork Expansion Joint Fillers for Concrete Paving and Structural Construction
ASTM D 3405	(1996) Joint Sealants, Hot-Applied, for Concrete and Asphalt Pavements

1.2 SUBMITTALS

Government approval is required for submittals with a "G" designation; submittals not having a "G" designation are for information only. When used, a designation following the "G" designation identifies the office that will review the submittal for the Government. The following shall be submitted in accordance with Section 01330 SUBMITTAL PROCEDURES:

SD-03 Product Data

Concrete

Copies of certified delivery tickets for all concrete used in the construction.

SD-06 Test Reports

Field Quality Control

Copies of all test reports within 24 hours of completion of the test.

1.3 WEATHER LIMITATIONS

1.3.1 Placing During Cold Weather

Concrete placement shall not take place when the air temperature reaches 40 degrees F and is falling, or is already below that point. Placement may begin when the air temperature reaches 35 degrees F and is rising, or is already above 40 degrees F. Provisions shall be made to protect the concrete from freezing during the specified curing period. If necessary to place concrete when the temperature of the air, aggregates, or water is below 35 degrees F, placement and protection shall be approved in writing. Approval will be contingent upon full conformance with the following provisions. The underlying material shall be prepared and protected so that it is entirely free of frost when the concrete is deposited. Mixing water and aggregates shall be heated as necessary to result in the temperature of the in-place concrete being between 50 and 85 degrees F. Methods and equipment for heating shall be approved. The aggregates shall be free of ice, snow, and frozen lumps before entering the mixer. Covering and other means shall be provided for maintaining the concrete at a temperature of at least 50 degrees F for not less than 72 hours after placing, and at a temperature above freezing for the remainder of the curing period.

1.3.2 Placing During Warm Weather

The temperature of the concrete as placed shall not exceed 85 degrees F except where an approved retarder is used. The mixing water and/or aggregates shall be cooled, if necessary, to maintain a satisfactory placing temperature. The placing temperature shall not exceed 95 degrees F at any time.

1.4 PLANT, EQUIPMENT, MACHINES, AND TOOLS

1.4.1 General Requirements

Plant, equipment, machines, and tools used in the work shall be subject to approval and shall be maintained in a satisfactory working condition at all times. The equipment shall have the capability of producing the required product, meeting grade controls, thickness control and smoothness requirements as specified. Use of the equipment shall be discontinued if it produces unsatisfactory results. The Contracting Officer shall have access at all times to the plant and equipment to ensure proper operation and compliance with specifications.

1.4.2 Slip Form Equipment

Slip form paver or curb forming machine, will be approved based on trial use on the job and shall be self-propelled, automatically controlled, crawler mounted, and capable of spreading, consolidating, and shaping the plastic concrete to the desired cross section in 1 pass.

PART 2 PRODUCTS

2.1 CONCRETE

Concrete shall conform to the applicable requirements of Section 02754 CONCRETE PAVEMENTS FOR SMALL PROJECT except as otherwise specified. Concrete shall have a minimum compressive strength of 4000 psi at 28 days. Maximum size of aggregate shall be 1-1/2 inches.

2.1.1 Air Content

Mixtures shall have air content by volume of concrete of 4 to 6 percent, based on measurements made immediately after discharge from the mixer.

2.1.2 Slump

The concrete slump shall be 3 inches plus or minus 1 inch where determined in accordance with ASTM C 143.

2.1.3 Reinforcement Steel

Reinforcement bars shall conform to ASTM A 615/A 615M, ASTM A 616/A 616M, or ASTM A 617/A 617M. Wire mesh reinforcement shall conform to ASTM A 185.

2.2 CONCRETE CURING MATERIALS

2.2.1 Impervious Sheet Materials

Impervious sheet materials shall conform to ASTM C 171, type optional, except that polyethylene film, if used, shall be white opaque.

2.2.2 Burlap

Burlap shall conform to AASHTO M 182.

2.2.3 White Pigmented Membrane-Forming Curing Compound

White pigmented membrane-forming curing compound shall conform to ASTM C 309,

Type 2.

2.3 CONCRETE PROTECTION MATERIALS

Concrete protection materials shall be a linseed oil mixture of equal parts, by volume, of linseed oil and either mineral spirits, naphtha, or turpentine. At the option of the contractor, commercially prepared linseed oil mixtures, formulated specifically for application to concrete to provide protection against the action of deicing chemicals may be used, except that emulsified mixtures are not acceptable.

2.4 JOINT FILLER STRIPS

2.4.1 Contraction Joint Filler for Curb and Gutter

Contraction joint filler for curb and gutter shall consist of hard-pressed fiberboard.

2.4.2 Expansion Joint Filler, Premolded

Expansion joint filler, premolded, shall conform to ASTM D 1751 or ASTM D 1752, 3/8 inch thick, unless otherwise indicated.

2.5 JOINT SEALANTS

2.5.1 Joint Sealant, Cold-Applied

Joint sealant, cold-applied shall conform to ASTM C 920.

2.5.2 Joint Sealant, Hot-Poured

Joint sealant, hot-poured shall conform to ASTM D 3405.

2.6 FORM WORK

Form work shall be designed and constructed to ensure that the finished concrete will conform accurately to the indicated dimensions, lines, and elevations, and within the tolerances specified. Forms shall be of wood or steel, straight, of sufficient strength to resist springing during depositing and consolidating concrete. Wood forms shall be surfaced plank, 2 inches nominal thickness, straight and free from warp, twist, loose knots, splits or other defects. Wood forms shall have a nominal length of 10 feet. Radius bends may be formed with 3/4 inch boards, laminated to the required thickness. Steel forms shall be channel-formed sections with a flat top surface and with welded braces at each end and at not less than two intermediate points. Ends of steel forms shall be interlocking and self-aligning. Steel forms shall include flexible forms for radius forming, corner forms, form spreaders, and fillers. Steel forms shall have a nominal length of 10 feet with a minimum of 3 welded stake pockets per form. Stake pins shall be solid steel rods with chamfered heads and pointed tips designed for use with steel forms.

2.6.1 Sidewalk Forms

Sidewalk forms shall be of a height equal to the full depth of the finished sidewalk.

2.6.2 Curb and Gutter Forms

Curb and gutter outside forms shall have a height equal to the full depth of the curb or gutter. The inside form of curb shall have batter as indicated and shall be securely fastened to and supported by the outside form. Rigid forms shall be provided for curb returns, except that benders or thin plank forms may be used for curb or curb returns with a radius of 10 feet or more, where grade changes occur in the return, or where the central angle is such that a rigid form with a central angle of 90 degrees cannot be used. Back forms for curb returns may be made of 1-1/2 inch benders, for the full height of the curb, cleated together. In lieu of inside forms for curbs, a curb "mule" may be used for forming and finishing this surface, provided the results are approved.

PART 3 EXECUTION

3.1 SUBGRADE PREPARATION

The subgrade shall be constructed to the specified grade and cross section prior to concrete placement. Subgrade shall be placed and compacted in conformance with Section 02316 and 02300.

3.1.1 Sidewalk Subgrade

The subgrade shall be tested for grade and cross section with a template extending the full width of the sidewalk and supported between side forms.

3.1.2 Curb and Gutter Subgrade

The subgrade shall be tested for grade and cross section by means of a template extending the full width of the curb and gutter. The subgrade shall be of materials equal in bearing quality to the subgrade under the adjacent pavement.

3.1.3 Maintenance of Subgrade

The subgrade shall be maintained in a smooth, compacted condition in conformity with the required section and established grade until the concrete is placed. The subgrade shall be in a moist condition when concrete is placed. The subgrade shall be prepared and protected to produce a subgrade free from frost when the concrete is deposited.

3.2 FORM SETTING

Forms shall be set to the indicated alignment, grade and dimensions. Forms shall be held rigidly in place by a minimum of 3 stakes per form placed at intervals not to exceed 4 feet. Corners, deep sections, and radius bends shall have additional stakes and braces, as required. Clamps, spreaders, and braces shall be used where required to ensure rigidity in the forms. Forms shall be removed without injuring the concrete. Bars or heavy tools shall not be used against the concrete in removing the forms. Any concrete found defective after form removal shall be promptly and satisfactorily repaired. Forms shall be cleaned and coated with form oil each time before concrete is placed. Wood forms may, instead, be thoroughly wetted with water before concrete is placed, except that with probable freezing temperatures, oiling is mandatory.

3.2.1 Sidewalks

Forms for sidewalks shall be set with the upper edge true to line and grade with an allowable tolerance of 1/8 inch in any 10 foot long section.

After forms are set, grade and alignment shall be checked with a 10 foot straightedge. Forms shall have a transverse slope as indicated with the low side adjacent to the roadway. Side forms shall not be removed for 12 hours after finishing has been completed.

3.2.2 Curbs and Gutters

The forms of the front of the curb shall be removed not less than 2 hours nor more than 6 hours after the concrete has been placed. Forms back of curb shall remain in place until the face and top of the curb have been finished, as specified for concrete finishing. Gutter forms shall not be removed while the concrete is sufficiently plastic to slump in any direction.

3.3 SIDEWALK CONCRETE PLACEMENT AND FINISHING

3.3.1 Formed Sidewalks

Concrete shall be placed in the forms in one layer. When consolidated and finished, the sidewalks shall be of the thickness indicated. After concrete has been placed in the forms, a strike-off guided by side forms shall be used to bring the surface to proper section to be compacted. The concrete shall be consolidated with an approved vibrator, and the surface shall be finished to grade with a strike off.

3.3.2 Concrete Finishing

After straightedging, when most of the water sheen has disappeared, and just before the concrete hardens, the surface shall be finished with a wood float or darby to a smooth and uniformly fine granular or sandy texture free of waves, irregularities, or tool marks. A scored surface shall be produced by brooming with a fiber-bristle brush in a direction transverse to that of the traffic, followed by edging.

3.3.3 Edge and Joint Finishing

All slab edges, including those at formed joints, shall be finished with an edger having a radius of 1/8 inch. Transverse joint shall be edged before brooming, and the brooming shall eliminate the flat surface left by the surface face of the edger. Corners and edges which have crumbled and areas which lack sufficient mortar for proper finishing shall be cleaned and filled solidly with a properly proportioned mortar mixture and then finished.

3.3.4 Surface and Thickness Tolerances

Finished surfaces shall not vary more than 5/16 inch from the testing edge of a 10-foot straightedge. Permissible deficiency in section thickness will be up to 1/4 inch.

3.4 CURB AND GUTTER CONCRETE PLACEMENT AND FINISHING

3.4.1 Formed Curb and Gutter

Concrete shall be placed to the section required in a single lift. Consolidation shall be achieved by using approved mechanical vibrators. Curve shaped gutters shall be finished with a standard curb "mule".

3.4.2 Curb and Gutter Finishing

Approved slipformed curb and gutter machines may be used in lieu of hand placement.

3.4.3 Concrete Finishing

Exposed surfaces shall be floated and finished with a smooth wood float until true to grade and section and uniform in texture. Floated surfaces shall then be brushed with a fine-hair brush with longitudinal strokes. The edges of the gutter and top of the curb shall be rounded with an edging tool to a radius of 1/2 inch. Immediately after removing the front curb form, the face of the curb shall be rubbed with a wood or concrete rubbing block and water until blemishes, form marks, and tool marks have been removed. The front curb surface, while still wet, shall be brushed in the same manner as the gutter and curb top. The top surface of gutter and entrance shall be finished to grade with a wood float.

A sample panel, minimum 5' x 5', of concrete sidewalk shall be placed for the Contractor to demonstrate all finishing of the concrete surface. This panel shall set the acceptance criteria for all field applied broom finishing, joint finishing, tooling, and edging.

3.4.4 Joint Finishing

Curb edges at formed joints shall be finished as indicated.

3.4.5 Surface and Thickness Tolerances

Finished surfaces shall not vary more than 1/4 inch from the testing edge of a 10-foot straightedge. Permissible deficiency in section thickness will be up to 1/4 inch.

3.5 SIDEWALK JOINTS

Sidewalk joints shall be constructed to divide the surface into rectangular areas. Transverse contraction joints shall be spaced at a distance equal to the sidewalk width or 5 feet on centers, whichever is less, and shall be continuous across the slab. Longitudinal contraction joints shall be constructed along the centerline of all sidewalks 10 feet or more in width. Transverse expansion joints shall be installed at sidewalk returns and opposite expansion joints in adjoining curbs. Where the sidewalk is not in contact with the curb, transverse expansion joints shall be installed as indicated. Expansion joints shall be formed about structures and features which project through or into the sidewalk pavement, using joint filler of the type, thickness, and width indicated.

3.5.1 Sidewalk Contraction Joints

The contraction joints shall be formed in the fresh concrete by cutting a groove in the top portion of the slab to a depth of at least one-fourth of the sidewalk slab thickness, using a jointer to cut the groove, or by sawing a groove in the hardened concrete with a power-driven saw, unless otherwise approved. Sawed joints shall be constructed by sawing a groove in the concrete with a 1/8 inch blade to the depth indicated. An ample supply of saw blades shall be available on the job before concrete placement is started, and at least one standby sawing unit in good working order shall be available at the jobsite at all times during the sawing operations.

3.5.2 Sidewalk Expansion Joints

Expansion joints shall be formed with 1/2 inch joint filler strips. Joint filler shall be placed with top edge 1/4 inch below the surface and shall be held in place with steel pins or other devices to prevent warping of the filler during floating and finishing. Immediately after finishing operations are completed, joint edges shall be rounded with an edging tool having a radius of 1/8 inch, and concrete over the joint filler shall be removed. At the end of the curing period, expansion joints shall be cleaned and filled with joint sealant. Joints shall be sealed as specified in Section 02760 FIELD MOLDED SEALANTS FOR SEALING JOINTS IN RIGID PAVEMENTS. The joint opening shall be thoroughly cleaned before the sealing material is placed. Sealing material shall not be spilled on exposed surfaces of the concrete. Concrete at the joint shall be surface dry and atmospheric and concrete temperatures shall be above 50 degrees F at the time of application of joint sealing material. Excess material on exposed surfaces of the concrete shall be removed immediately and concrete surfaces cleaned.

3.5.3 Reinforcement Steel Placement

Reinforcement steel shall be accurately and securely fastened in place with suitable supports and ties before the concrete is placed.

3.6 CURB AND GUTTER JOINTS

Curb and gutter joints shall be constructed at right angles to the line of curb and gutter.

3.6.1 Contraction Joints

Contraction joints shall be constructed directly opposite contraction joints in abutting portland cement concrete pavements and spaced so that monolithic sections between curb returns will not be less than 5 feet nor greater than 15 feet in length. Contraction joints shall be constructed by means of 1/8 inch thick separators and of a section conforming to the cross section of the curb and gutter. Separators shall be removed as soon as practicable after concrete has set sufficiently to preserve the width and shape of the joint and prior to finishing.

3.6.2 Expansion Joints

Expansion joints shall be formed by means of preformed expansion joint filler material cut and shaped to the cross section of curb and gutter. Expansion joints shall be provided in curb and gutter directly opposite expansion joints of abutting portland cement concrete pavement, and shall be of the same type and thickness as joints in the pavement. Where curb and gutter do not abut portland cement concrete pavement, expansion joints at least 1/2 inch in width shall be provided at intervals not exceeding 100 feet. Expansion joints shall be provided in nonreinforced concrete gutter at locations indicated. Expansion joints shall be sealed immediately following curing of the concrete or as soon thereafter as weather conditions permit. Joints shall be sealed as specified in Section 02760 FIELD MOLDED SEALANTS FOR SEALING JOINTS IN RIGID PAVEMENTS. Expansion joints and the top 1 inch depth of curb and gutter contraction-joints shall be sealed with joint sealant. The joint opening shall be thoroughly cleaned before the sealing material is placed. Sealing material shall not be spilled on exposed surfaces of the concrete. Concrete at the joint

shall be surface dry and atmospheric and concrete temperatures shall be above 50 degrees F at the time of application of joint sealing material. Excess material on exposed surfaces of the concrete shall be removed immediately and concrete surfaces cleaned.

3.7 CURING AND PROTECTION

3.7.1 General Requirements

Concrete shall be protected against loss of moisture and rapid temperature changes for at least 7 days from the beginning of the curing operation. Unhardened concrete shall be protected from rain and flowing water. All equipment needed for adequate curing and protection of the concrete shall be on hand and ready for use before actual concrete placement begins. Protection shall be provided as necessary to prevent cracking of the pavement due to temperature changes during the curing period.

3.7.1.1 Mat Method

The entire exposed surface shall be covered with 2 or more layers of burlap. Mats shall overlap each other at least 6 inches.The mat shall be thoroughly wetted with water prior to placing on concrete surface and shall be kept continuously in a saturated condition and in intimate contact with concrete for not less than 7 days.

3.7.1.2 Impervious Sheeting Method

The entire exposed surface shall be wetted with a fine spray of water and then covered with impervious sheeting material. Sheets shall be laid directly on the concrete surface with the light-colored side up and overlapped 12 inches when a continuous sheet is not used. The curing medium shall not be less than 18-inches wider than the concrete surface to be cured, and shall be securely weighted down by heavy wood planks, or a bank of moist earth placed along edges and laps in the sheets. Sheets shall be satisfactorily repaired or replaced if torn or otherwise damaged during curing. The curing medium shall remain on the concrete surface to be cured for not less than 7 days.

3.7.1.3 Membrane Curing Method

A uniform coating of white-pigmented membrane-curing compound shall be applied to the entire exposed surface of the concrete as soon after finishing as the free water has disappeared from the finished surface. Formed surfaces shall be coated immediately after the forms are removed and in no case longer than 1 hour after the removal of forms. Concrete shall not be allowed to dry before the application of the membrane. If any drying has occurred, the surface of the concrete shall be moistened with a fine spray of water and the curing compound applied as soon as the free water disappears. Curing compound shall be applied in two coats by hand-operated pressure sprayers at a coverage of approximately 200 square feet per gallon for the total of both coats. The second coat shall be applied in a direction approximately at right angles to the direction of application of the first coat. The compound shall form a uniform, continuous, coherent film that will not check, crack, or peel and shall be free from pinholes or other imperfections. If pinholes, abrasion, or other discontinuities exist, an additional coat shall be applied to the affected areas within 30 minutes. Concrete surfaces that are subjected to heavy rainfall within 3 hours after the curing compound has been applied shall be resprayed by the method and at the coverage specified above. Areas where

the curing compound is damaged by subsequent construction operations within the curing period shall be resprayed. Necessary precautions shall be taken to insure that the concrete is properly cured at sawed joints, and that no curing compound enters the joints. The top of the joint opening and the joint groove at exposed edges shall be tightly sealed before the concrete in the region of the joint is resprayed with curing compound. The method used for sealing the joint groove shall prevent loss of moisture from the joint during the entire specified curing period. Approved standby facilities for curing concrete pavement shall be provided at a location accessible to the jobsite for use in the event of mechanical failure of the spraying equipment or other conditions that might prevent correct application of the membrane-curing compound at the proper time. Concrete surfaces to which membrane-curing compounds have been applied shall be adequately protected during the entire curing period from pedestrian and vehicular traffic, except as required for joint-sawing operations and surface tests, and from any other possible damage to the continuity of the membrane.

3.7.2 Backfilling

After curing, debris shall be removed and the area adjoining the concrete shall be backfilled, graded, and compacted to conform to the surrounding area in accordance with lines and grades indicated.

3.7.3 Protection

Completed concrete shall be protected from damage until accepted. The Contractor shall repair damaged concrete and clean concrete discolored during construction. Concrete that is damaged shall be removed and reconstructed for the entire length between regularly scheduled joints. Refinishing the damaged portion will not be acceptable. Removed damaged portions shall be disposed of as directed.

3.7.4 Protective Coating

Protective coating of linseed oil mixture shall be applied to the exposed-to-view concrete surface.

3.7.4.1 Application

Curing and backfilling operation shall be completed prior to applying two coats of protective coating. Concrete shall be surface dry and clean before each application. Coverage shall be by spray application at not more than 50 square yards per gallon for first application and not more than 70 square yards per gallon for second application, except that the number of applications and coverage for each application for commercially prepared mixture shall be in accordance with the manufacturer's instructions. Coated surfaces shall be protected from vehicular and pedestrian traffic until dry.

3.7.4.2 Precautions

Protective coating shall not be heated by direct application of flame or electrical heaters and shall be protected from exposure to open flame, sparks, and fire adjacent to open containers or applicators. Material shall not be applied at ambient or material temperatures lower than 50 degrees F.

3.8 FIELD QUALITY CONTROL

3.8.1 General Requirements

The Contractor shall perform the inspection and tests described and meet the specified requirements for inspection details and frequency of testing. Based upon the results of these inspections and tests, the Contractor shall take the action and submit reports as required below, and any additional tests to insure that the requirements of these specifications are met.

3.8.2 Concrete Testing

3.8.2.1 Strength Testing

The Contractor shall provide molded concrete specimens for strength tests. Samples of concrete placed each day shall be taken not less than once a day nor less than once for every 250 cubic yards of concrete. The samples for strength tests shall be taken in accordance with ASTM C 172. Cylinders for acceptance shall be molded in conformance with ASTM C 31/C 31M by an approved testing laboratory. Each strength test result shall be the average of 2 test cylinders from the same concrete sample tested at 28 days, unless otherwise specified or approved. Concrete specified on the basis of compressive strength will be considered satisfactory if the averages of all sets of three consecutive strength test results equal or exceed the specified strength, and no individual strength test result falls below the specified strength by more than 500 psi.

3.8.2.2 Air Content

Air content shall be determined in accordance with ASTM C 173 or ASTM C 231. ASTM C 231 shall be used with concretes and mortars made with relatively dense natural aggregates. Two tests for air content shall be made on randomly selected batches of each class of concrete placed during each shift. Additional tests shall be made when excessive variation in concrete workability is reported by the placing foreman or the Government inspector. If results are out of tolerance, the placing foreman shall be notified and he shall take appropriate action to have the air content corrected at the plant. Additional tests for air content will be performed on each truckload of material until such time as the air content is within the tolerance specified.

3.8.2.3 Slump Test

Two slump tests shall be made on randomly selected batches of each class of concrete for every 100 cubic yards, or fraction thereof, of concrete placed during each shift. Additional tests shall be performed when excessive variation in the workability of the concrete is noted or when excessive crumbling or slumping is noted along the edges of slip-formed concrete.

3.8.3 Thickness Evaluation

The anticipated thickness of the concrete shall be determined prior to placement by passing a template through the formed section or by measuring the depth of opening of the extrusion template of the curb forming machine. If a slip form paver is used for sidewalk placement, the subgrade shall be true to grade prior to concrete placement and the thickness will be determined by measuring each edge of the completed slab.

3.8.4 Surface Evaluation

The finished surface of each category of the completed work shall be uniform in color and free of blemishes and form or tool marks.

3.9 SURFACE DEFICIENCIES AND CORRECTIONS

3.9.1 Thickness Deficiency

When measurements indicate that the completed concrete section is deficient in thickness by more than 1/4 inch the deficient section will be removed, between regularly scheduled joints, and replaced.

3.9.2 High Areas

In areas not meeting surface smoothness and plan grade requirements, high areas shall be reduced either by rubbing the freshly finished concrete with carborundum brick and water when the concrete is less than 36 hours old or by grinding the hardened concrete with an approved surface grinding machine after the concrete is 36 hours old or more. The area corrected by grinding the surface of the hardened concrete shall not exceed 5 percent of the area of any integral slab, and the depth of grinding shall not exceed 1/4 inch. Pavement areas requiring grade or surface smoothness corrections in excess of the limits specified above shall be removed and replaced.

3.9.3 Appearance

Exposed surfaces of the finished work will be inspected by the Government and any deficiencies in appearance will be identified. Areas which exhibit excessive cracking, discoloration, form marks, or tool marks or which are otherwise inconsistent with the overall appearances of the work shall be removed and replaced.

-- End of Section --

SECTION 02800

ORNAMENTAL ALUMINUM FENCE
08/00

PART 1 GENERAL

1.1 REFERENCES

The publications listed below form a part of this specification to the extent referenced. The publications are referred to in the text by basic designation only.

AMERICAN ARCHITECTURAL MANUFACTURERS ASSOCIATION (AAMA)

AAMA 603.8	Performance requirements & testing procedures for pigmented organic coatings

AMERICAN SOCIETY FOR TESTING AND MATERIALS (ASTM)

ASTM B 221	Specifications for aluminum alloy extruded bars, shapes and tubes

1.2 SYSTEM DESCRIPTION

The manufacturer shall apply a total ornamental aluminum fencing system of the style, strength, and color defined herein. The system shall be a total package including all components; pickets, posts, and stringers, as required. The contractor shall provide labor, materials and all necessary accessory items for the installation of the ornamental aluminum fence system specified herein at Langley AFB Flight Kitchen.

1.3 SUBMITTALS

Government approval is required for submittals with a "GA" designation; submittals having an "FIO" designation are for information only. The following shall be submitted in accordance with Section 01330 SUBMITTAL PROCEDURES:

SD-02 Shop Drawings

Ornamental fence system and components; G

Drawings showing elevations and plan location of each fence section including details and method of anchorage, thickness of materials and details of joints and/or connections.

SD-03 Product Data

Ornamental Fence System and Components; G

Manufacturer's description data and catalog cuts

SD-04 Samples

Finish; G

Samples of Color Specified

1.4 DELIVERY AND STORAGE

Materials delivered to the jobsite shall be inspected for damage, and shall be loaded with a minimum of handling. Storage shall be in a dry location with adequate ventilation, free from dust, water, and other contaminants, and which permits easy access for inspecting and handling.

PART 2 PRODUCTS

2.1 ORNAMENTAL FENCE SYSTEM AND COMPONENTS

The following manufacturer of the ornamental fence is specified as approved equal to provide the intent, design, and quality of materials. Other manufacturers that comply with this specification for design and quality may be approved equal.

Monumental Iron Works by Master Halco
6506 Eastern Ave
Baltimore, MD 21224
1-800-229-5615
Fax: 1-800-239-2963

a. The fence style is shown on the drawings. It is similar to Estate style C (Pressed Point) as follows:

Color: Bronze

Pickets: 1" x 1" x 16 ga, Tubular

Rails: 1-1/2" x 1-3/8" x 8'-11 ga

Posts: 2.5" x 2.5" x 16 ga, Tubular

Picket spacing: 4

Post caps: Standard

Height: 72"

Alloy: 6105-%5-35,000 PSI

2.2 MATERIALS

2.2.1 Aluminum Extrusions

All components shall be made of 6063-t5 in accordance with ASTM B 221.

2.2.2 Fasteners

All screws shall be 302 stainless self-drilling head. All screws shall be painted to match the finish of fence.

2.2.3 Accessories

Aluminum castings shall be used for all post caps, wall brackets, scrolls, finials and other miscellaneous hardware. Hinges and latches shall be fabricated from aluminum extrusions with stainless steel spring - capped.

2.3 FINISH

The Fence shall be coated with POLYCOL-OR(r), an environmentally approved, premium high-solids acrylic coating which exceeds AAMA 603.8. Application of POLYCOLOR shall be electrostatic spray. Curing shall be at a temperature of 375 degrees F to 400 degrees F.

2.4 FABRICATION

2.4.1 Rails

Rails shall be punched to allow pickets to pass through the top of the rail. The number of stringers shall vary with the style, heights, and strength as determined by manufacturer.

2.4.2 Pickets

Shall be fastened to stringers mechanically with stainless steel TEK screws on one side of the stringer only. All pickets shall be capped.

2.4.3 Posts

Shall be prepunched to allow the stringers to slide in and be attached with stainless steel TEK screws. Cast aluminum post caps shall be affixed to all posts.

PART 3 EXECUTION

3.1 PREPARATION

Prepare the masonry and concrete wall cap openings where fence is to be installed. Remove surface irregularities, if any, which may cause interference with the installation of the fence.

3.2 INSTALLATION

Verify open size. Set posts 8'-0" on center maximum. Insert stringer ends into prepunched post and fasten with TEK screws. Center and align posts to verify posts are vertical, time and plumb. Install posts and fence.

3.3 CLEANING

Contractor shall clean jobsite of excess materials; post hole excavations shall be scattered uniformly away from posts. Clean aluminum fence with mild household detergent and clean water, rinse well. Mortar should be removed from exposed posts using a 10 percent solution of muriatic acid followed immediately by severe rinses with clean water.

-- End of Section --

SECTION 02811

IRRIGATION SYSTEM
07/02

PART 1 GENERAL

1.1 REFERENCES

The following publications of the issues listed below, but referred to thereafter by basic designation only, form a part of this specification to the extent indicated by the references.

AMERICAN SOCIETY FOR TESTING AND MATERIALS (ASTM)

ASTM D 1557	(1998) Laboratory Compaction Characteristics of Soil Using Modified Effort (56,000 ft-lbf/cu.ft.)
ASTM D 1784	(1999a) Rigid Poly(Vinyl Chloride) (PVC) Compounds and Chlorinated Poly(Vinyl Chloride) (CPVC) Compounds
ASTM D 2241	(2000)Poly(Vinyl Chloride) (PVC) Pressure Rated (SDR-Series)
ASTM D 2466	(1999) Poly(Vinyl Chloride) (PVC) Plastic Pipe Fittings, Schedule 40
ASTM D 2564	(1996a) Solvent Cements for Poly(Vinyl Chloride) (PVC) Plastic Piping Systems
ASTM D 2774	(1994) Underground Installation of Thermoplastic Pressure Piping
ASTM D 2855	(1996) Making Solvent-Cemented Joints with Poly(Vinyl Chloride) (PVC) Pipe and Fittings

AMERICAN SOCIETY OF SANITARY ENGINEERING (ASSE)

ASSE 1012	(1995) Backflow Preventers with Intermediate Atmospheric Vent
ASSE 1013	(1999) Reduced Pressure Principle Backflow Preventers
ASSE 1020	(1998) Pressure Vacuum Breaker Assembly (Recommended for Outdoor Usage)

U.S. GENERAL SERVICES ADMINISTRATION (GSA)

FS WW-V-54	Valve, Gate Bronze (125, 150, and 200 and Int. AM-1 Pound, Threaded Ends, Flanged Ends, Solder End and Brazed Ends, for Land Use)

AMERICAN WATER WORKS ASSOCIATION (AWWA)

AWWA C509	(1994; Addendum 1995) Resilient-Seated Gate Valves for Water Supply Service

NATIONAL ELECTRICAL MANUFACTURERS ASSOCIATION (NEMA)

NEMA ICS 2	(1993) Industrial Controls and Systems Controllers, Contactors, and Overload Relays Rated Not More Than 2,000 Volts AC or 750 Volts DC
NEMA ICS 6	(1993) Industrial Control and Systems, Enclosures

1.2 WORK SPECIFIED HEREIN

a. This section describes the labor, materials and installation requirements necessary to design and install an automatic irrigation system adequate to irrigate all plant materials, if any, in this project

b. Excavation, trenching and backfilling for irrigation systems is covered in Section 02316.

c. Electrical work shall conform to the National Electric Code, latest edition.

1.3 PERFORMANCE REQUIREMENTS

System shall operate with a minimum water pressure of 58-60 pounds per square inch (psi) at connection to backflow prevention device and 25 psi at the last head in each zone.

1.4 GUARANTEE/WARRANTY AND REPLACEMENT

The purpose of this guarantee/warranty is to insure that the AF receives irrigation materials of prime quality installed and maintained in a through and careful manner.

a. For a period of one year from the date of final completion and commencement of the formal maintenance period, guarantee/warranty irrigation materials, equipment, and workmanship against defects. Fill and repair depressions. Restore landscape or structural features damaged by the settlement of irrigation trenches or excavations. Repair damage to the premises caused by a defective item. Make repairs immediately upon notification from the AF Representative. AF Winterization & Spring startup to be included in the 1 year warranty period.

b. Contract documents govern replacements the same as new work. Make replacements at no cost in contract price.

c. Guarantee/warranty applies to originally installed materials and equipment and replacements made during the guarantee/warranty period.

1.5 SUBMITTALS

The following shall be submitted:

SD-02 Shop Drawings

Design Analysis, Calculations, and Spare Parts; G

Construction Drawings; G

Record and As-built Drawings; G

SD-07 Certificates

Supplier's Statement; G

Statements signed by responsible officials of manufacturer of product, system or material attesting that product, system or material meets specification requirements. Must be dated after award of project contract and clearly name the project.

SD-10 Operation and Maintenance Data

Maintenance Manuals; G

Six copies of operation and six copies of maintenance manuals for the equipment furnished. One complete set prior to performance testing and the remainder upon acceptance. Operation manuals shall detail the step-by-step procedures required for system startup, operation, and shutdown. Operation manuals shall include the manufacturer's name, model number, parts list, and brief description of all equipment and their basic operating features. Maintenance manuals shall list routine maintenance procedures, possible breakdowns and repairs, and troubleshooting guides. Maintenance manuals shall include piping and equipment layout and simplified wiring and control diagrams of the system as installed. Manuals shall be approved prior to the field training course.

1.6 IRRIGATION SYSTEM DESIGN AND LAYOUT

1.6.1 Design Analysis, Calculations, and Spare Parts

Design analyses and pressure calculations verifying that system will provide the irrigation requirements. Spare parts data for each different item of material and equipment specified, after approval of the related submittals and not later than the start of the field-tests. The data shall include a complete list of parts and supplies, with current until prices and source of supply, with current unit prices and source of supply.

1.6.2 Construction Drawings

The irrigation systems on LAFB must be industrial/ commercial systems. Toro, Rainbird or approved equal must be accepted by the 1st CES Water Shop and Contracting officer. Detail drawings for valves, sprinkler heads, backflow preventers, automatic controllers, emitter heads, and water hammer arresters. Drawing shall include of a complete list of equipment and materials, and manufacturer's descriptive and technical literature, performance charts and curves, catalog cuts, and installation instructions. Drawings shall also contain complete wiring and schematic diagrams and any other details required to demonstrate that the system has been coordinated

and will function as a unit. Drawings shall show proposed system layout, type and number of heads and emitters, zone valves, drain pockets, backflow devices, controllers, and mounting details of controllers. As-built Drawings which provide current factual information showing locations of mains, heads valves, and controllers including deviations from amendments to the drawings and changes in the work shall be included.

1.6.3 Record and As-Built Drawings

The Contractor shall provide and keep up to date a complete "as-built" record set of prints which shall be corrected daily and show every change from the original drawings and specifications and the exact "as-built" locations, sizes, and kinds of equipment. Prints for this purpose may be obtained from the Contracting Officer at no cost. This set of drawings shall be kept on the site and shall be used only as a record set.

These drawings shall also serve as work progress sheets. The Contractor shall make neat and legible annotations thereon daily as the work proceeds, showing the work as actually installed. These drawings shall be available at all times for inspection and shall be kept in a location designated by the Contracting Officer.

Before the date of final inspection, the Contractor shall transfer all information from the "as-built" prints to the final "as-built" in the host project air force base preferred computerized drawings format. The drawing shall be provided to the Contracting Officer an acceptable electronic media.

The Contractor shall dimension from two permanent points of reference, building corners, sidewalk, road intersections, road station points, etc., the location of the following items (if applicable):

a. Connection to existing water lines.

b. Connection to existing electrical power.

c. All valves and backflow devices.

d. Routing of all irrigation (dimension max. 200 feet along routing).

e. Irrigation controllers.

f. Routing of control wiring.

g. Quick coupling valves.

h. Drip system riser assemblies.

i. Other related equipment as directed by the Contracting Officer.

j. All lettering on drawings shall be minimum 1/8 inch in size.

On or before the date of final inspection, the Contractor shall deliver the corrected and approved drawings to the Contracting Officer. Delivery of the drawings will not relieve the Contractor of the responsibility of furnishing required information that may be omitted.

1.7 SAFETY

Detailed procedures defining the Contractor's provisions for accident prevention, health protection, and safety precautions for the work to be done.

a. Work and materials shall be in accordance with the latest edition of the National Electric Code, the Uniform Plumbing Code as published by the Western Plumbing Officials Association, and applicable laws and regulations of the governing authorities.

b. When the contract documents call for materials or construction of a better quality or large size than require by the above-mentioned rules and regulations, provide the quality and size required by the contract documents.

c. All irrigation work will be coordinated through the Langley 1 CES Watershop @ 764-2213.

d. Verify all underground utilities.

1.8 SUPPLIER'S STATEMENT

The material supplier's or equipment manufacturer's statement that the supplied material or equipment meets specified requirements. Each certificate shall be signed by an official authorized to certify in behalf of material supplier or product manufacture and shall identify quantity and date or dates of shipment or delivery to which the certificates apply.

1.9 MAINTENANCE MANUALS

Six copies of operation and six copies of maintenance manuals for the equipment furnished. One complete set prior to field-testing and the remainder upon acceptance. Manuals shall be approved prior to the field-training course. Operating manuals shall detail the step-by-step procedures required for system startup, operation and shutdown. Operating manuals shall include the manufacturer's name, model number, parts list, and brief description of all equipment and their basic operating features. Maintenance manuals shall list routine maintenance procedures, possible breakdowns and repairs, and troubleshooting guides. Maintenance manuals shall include piping and equipment layout, simplified wiring and control diagrams of the system as installed, and system programming schedule.

1.10 SUBSTITUTIONS

a. Substitutions are not encouraged and as a general rule will not be allowed.

b. Submit requests for substitutions within 15 days after date of Contract Award. Subsequent requests for substitutions will be considered only when a product becomes unavailable.

c. Submit complete data showing compliance with the Contract Documents.

d. In making a request for substitution, the Contractor represents that he:

(1) Has investigated the proposed substitution and found that it is of the same or better quality, level, capacity, function, or

appearance than the specified product.

(2) Will coordinate installation and make modification to the work, which may be required for complete installation.

(3) Will bear all costs resulting from necessary changes caused by the substitution.

e. The AF Representative will determine acceptability of proposed substitution and will notify Contractor of acceptance or rejection.

f. Pipe sizes referenced in the construction documents are minimum sizes, and may be increased at the option of the Contractor.

1.11 DELIVERY AND STORAGE

All equipment delivered and placed in storage shall be protected from the weather; excessive humidity and temperature variation; direct sunlight (in case of plastic or rubber materials); and dirt, dust, or other contaminants.

1.12 FIELD MEASUREMENTS

The Contractor shall verify all dimensions in the field and shall advise the Contracting Officer, or his/her designated representative of any discrepancy before performing the work.

1.13 REVIEWS

a. Pre-maintenance review will occur at substantial completion of irrigation system record (as-built) drawings, and controller charts. Construction maintenance period will begin at time of substantial completion.

b. Final inspection will be performed at the end of the construction maintenance period

PART 2 PRODUCTS

2.1 GENERAL MATERIALS AND EQUIPMENT REQUIREMENTS

2.1.1 Standard Products

Materials and equipment shall be the standard products of a manufacturer who has produced similar systems which have performed well for a minimum period of 2 years prior to bid opening. Equipment shall be supported by a service organization that is, in the opinion of the Contracting Officer, or his/her designated representative reasonably convenient to the site.

Each item of equipment shall have the manufacturer's name, address, type or style, model or serial number, and catalog number on a plate secured to the item of equipment.

2.1.1.1 Extra Stock

The following extra stock shall be provided: Two sprinkler heads of each size and type, two valve keys for operating manual valves, two wrenches for removing and installing each type of head, two quick coupler keys and hose swivels, and four irrigation controller housing keys.

2.2 PIPING MATERIALS

2.2.1 Quality

Materials used in the system shall be new and without flaws or defects of any type, and shall be the best of their class and kind.

2.2.1.1 Mainline Pipe and Fittings

a. Use rigid, unplasticized polyvinyl chloride (PVC) 1120, 1220 National Sanitation Foundation (NSF) approved pipe, extruded from material meeting the requirements of Cell Classification 12454-A or 12454-B, ASTM D 1784, with an integral belled end.

b. Use Class 200, SDR-21, rated at 200 psi, conforming to the dimensions and tolerances established by ASTM D 2241.

c. Use Schedule 40. Type 1, PVC solvent weld fittings conforming to ASTM D 2466 and ASTM D 1784. Use primer approved by the pipe manufacturer. Solvent cement to conform to ASTM D 2564.

c. Provide metallic tracer tape or wire (capable of being detected with a metal detector) adjacent to all PVC pipe at time of installation (as specified on drawings).

2.2.1.2 Lateral Pipe and Fittings

a. Use rigid, unplasticized polyvinyl chloride (PVC) 1120, 1220 extruded from material meeting the requirements of Cell Classification 12454-A or 12454-B, ASTM D 1784, with and integral belled end suitable for solvent welding.

b. Use Class 200 SDR-26, rated at 200 psi, conforming to the dimensions and tolerances established by ASTM Standards. Fittings for PVC pipe shall be scheduled 40, Type I, PVC 41 Solvent weld fittings- ASTM D 2466 and ASTM D 1784.

c. Use primer approved by the pipe manufacturer. Solvent cement to conform to ASTM D 2564, of a type approved by the pipe manufacturer.

d. Provide metallic tracer tape or wire (capable of being detected with a metal detector) adjacent to all PVC pipe at time of installation (as shown on drawings).

2.2.2 Sleeving

a. Install separate sleeve beneath paved areas to route each run of irrigation pipe or wiring bundle.

b. Sleeving material beneath pedestrian pavements shall be be PVC Class 200 pipe with solvent welded joints.

c. Sleeving beneath drives and streets shall be scheduled 40 PVC pipe with solvent welded joints.

d. Sleeving diameter; equal to twice that of the pipe or wiring bundle.

2.2.3 Solvent Cement

Solvent cement shall conform to the requirements of ASTM D 2564.

2.3 SPRINKLER AND EMITTER HEADS

2.3.1 Pop-up Spray Heads

Pop-up spray heads lay flush with housing, then pop up when water pressure 20 psi is activated in system. The rising member supporting the nozzle shall be identical on full, half, third or quarter pattern sprinklers so that nozzles will be interchangeable. The sprinkler head shall be designed to be adjustable for coverage and flow. The nozzle shall be removable so head does not have to be removed for flushing or cleaning. The body shall be constructed with a 1/2-inch female thread for installation in a fixed underground pipe system.

Pop-up spray heads shall conform to the requirements of FS W W-H0012200, Type II, Adjustable Class. Nozzle rises a minimum of 4 inches above body.

2.3.2 Shrubbery Sprinkler Heads

Sprinkler heads shall be conical spray with adjustable coverage and designed as pop-ups at a height compatible with plant materials.

2.4 GATE VALVES

a. Gate valves shall be brass and shall be designed for a working pressure of not less than 150 psi. Valve connections shall be as required for the piping in which they are installed. Valves shall have a clear waterway equal to the full nominal diameter of the valve, and shall be opened by turning counterclockwise. The operating nut or wheel shall have an arrow, cast in the metal, indicating the direction of opening.

b. Valves smaller than 3 inches shall be all bronze and shall conform to Federal Specification FS WW-V-54, Type 1.

c. Valves 3 inches or larger shall be iron body, bronze mounted, and shall conform to AWWA C509.

2.5 QUICK COUPLING VALVES

Quick coupling valves shall have brass parts and shall be two-piece unit consisting of a coupler water seal valve assembly and a removable upper body to allow spring and key track to be serviced without shutdown of main. Lids shall be lockable vinyl with spring for positive closure on key removal.

2.6 CONTROL VALVES, ELECTRICAL

Remote control valves shall be solenoid actuated globe valves of 3/4 - to (19.1 mm to 76.2 mm)-inch size, suitable for 24 VAC volts, 60 cycle, and designed to provide for shut-off in event of power failure. Valve shall be cast bronze or brass or plastic housing suitable for service at 150 psi operating pressure with external flow control adjustment for shut-off capability, external plug at diaphragm chamber to enable manual operation, filter in control chamber to prevent valve body clogging with debris, durable diaphragm, and accessibility to internal parts without removing.

Automatic valves shall be plastic, spring loaded ball drip type, 150 pounds and threaded ends, designed to close at 6-foot pressure head with positive seal at 3 psi pressure or greater and be open to drain at less than 3 psi pressure.

Manual control valves shall be angle-pattern, globe type with integral union on the discharge (horizontal) end, with a cross on the valve stem for key operation.

2.7 BACKFLOW PREVENTERS

Reduced pressure principle assemblies, and pressure type vacuum breakers shall be tested, approved, and listed in accordance with ASSE 1020. Backflow preventers with intermediate atmospheric vent shall be in accordance with ASSE 1012. Reduced pressure principle backflow preventers shall be in accordance with ASSE 1013.

2.8 REDUCED PRESSURE TYPE BACKFLOW PREVENTERS

Backflow preventers hall be 150-pound flanged, brass mounted gate valve and strainer, 304 stainless steel or bronze, integral parts. Total pressure drop through complete assembly shall be a maximum of 10 psi at rated flow. Piping shall be red brass pipe and fittings. Strainers shall be bronze or brass construction with gasket caps. Units shall have 200-mesh stainless steel screen elements.

2.9 ACCESSORIES AND APPURTENANCES

a. Valve Keys for Manually Operated Valves: Valve keys shall be 1/2 (12.7 mm)- inch diameter by 3 (914 mm) feet long, tee handles and keyed to fit valves.

b. Valve Boxes and Covers.

c. Valve Boxes: Valve boxes shall be cast iron, plastic lockable, or precast concrete for each gate valve, manual control valve and remote control valve. Box sizes shall be adjustable for valve used. Shaft diameter of box shall be minimum 5 1/4 (133.4 mm) inches. Cast iron box shall have bituminous coating.

2.10 AUTOMATIC CONTROLLERS, ELECTRICAL

a. Control timing and quantity of water to sprinkler heads. Use 3 to 60 minutes for sprinkler heads and 0 to 3 hours for emitter heads.

b. Controller shall conform to the requirements of NEMA ICS 2 with 120 volt single phase service, operating with indicated stations, and grounded chassis. Enclosure shall conform to NEMA ICS 6 Type 3R, with locking hinged cover, wall mounted. Controller shall be programmed for various schedule by setting switches and dials equipped with the following features: A dial, allowing each station to be scheduled individually as to days of watering; a minute switch for each station with positive increment minute to minute 0.99 minutes, set time within one percent; a switch allowing selected schedules to be repeated after each completion of initial watering schedule and allowing each operation to be scheduled throughout a 24-hour day; a circuit breaker for surge protection; and circuit for a 9-volt rechargeable NiCad battery.

c. Controllers the product of a manufacturer regularly engaged in the production of turf sprinkler systems and shall be specifically designed for use on irrigation projects and shall be compatible with existing systems on the installation. Controller shall be suitable for operation on the available electrical supply and shall be capable of complete automatic and manual operation of stations, as specified on drawings. Control circuit voltage shall be less than 120 volts and be capable of operating up to two 24-volt AC electric remote control valves per station. Each controller shall have a master switch to disconnect controller from electric supply lines.

d. Housing: Each controller shall be enclosed in a tamperoof lockable metal housing. Exterior wall-mounted and pedestal-mounted controllers shall be weatherproof. Where more than one controller is installed in an irrigation system, a single-key shall open all cabinets. Two keys for each system shall be furnished.

e. Programming: Timing for each station shall be viable up to 99 minutes. The programming cycle shall be not less than 14 calendar days. Each station shall be independently times, scheduled, or omitted. Programming shall be changeable without special tools and without dissembling controller.

f. Charts: A chart showing clearly the areas serviced by each remote control valve shall be provided at each controller.

2.10.1 Control Wire

a. Electric wire from the controller unit to each remote control valve shall be American Wire Gauge (AWG) No. 14 solid copper, Type UF cable, UL approved for dire underground burial.

b. Color: Wire color shall be continuous over its entire length. Use white for common ground wire. Use easily distinguished colors for other control wires. Spare control wires shall be of a color different from that of the active control wire.

c. Splices: Use wire connector with waterproof sealant. Wire connector to be of plastic construction consisting of two (2) pieces, one piece which snap locks into the other. A copper crimp sleeve to be provided with connector.

2.11 ELECTRICAL WORK

Wiring and rigid conduit for electrical power shall be in accordance with NFPA 70.

2.12 MISCELLANEOUS ITEMS

a. Service clamps, if any, shall have a pressure rating not less than that of the pipe to be connected and shall be either the single or double flattened strap type. Clamps shall have a galvanized malleable iron body with cadmium plated straps and nuts. Clamps shall have rubber gasket cemented to the body.

b. Tapping sleeve(s), if any, of the size(s) indicated for connection

to existing main shall be the cast-iron, split-sleeve type with flange on the outlet, and with bolts, follower rings and gaskets on each end of the sleeve. Construction shall be suitable for a maximum working pressure of 150 psi. Bolts shall have square heads and hexagonal nuts. Longitudinal gaskets, and mechanical joints with gaskets shall be as recommended by the manufacturer of the sleeve.

2.13 PRESSURE REDUCTION RISER

a. The pressure reduction riser shall consist of the pressure reducing valve, ball valve, wye strainer, check valve, valve box, and all appurtenances, or as specified on drawings.

b. The pressure reducing valve shall be a self-contained, single-seat, direct-acting, spring-loaded, diaphragm-actuated type. Valve shall be of all plastic construction, stainless steel body seat, composition seat discs, BUNA "N" diaphragm with nylon insert and stainless steel springs. The valve shall have a maximum working pressure rating of 150 psi and shall be capable of regulating outlet pressure from 5 to 20 psi and have and adjustment screw for setting the pressure. The downstream pressure variance shall not exceed a rate of 0.44 psi for every 10 psi variance (increase or decrease) in upstream or source pressure. The valve shall have an integral "Sharader" pressure test valve.

c. The valve shall have 1/2-inch MPT inlet and 3/4-inch MHT female outlet.

d. The threaded in-line spring check valve, if any, shall have a body constructed of type 1 PVC. The valve stem shall be 18-8 stainless steel with BUNA-N poppet seal. The 1/2-pound spring shall be 18-8 stainless steel. The valve shall have male x female threads, 3/4-inch NPT.

e. The ball valve, if any, shall be construction of Type I PVC (body and handle). The stem seal shall be BUNA "N" with teflon ball seal. The valve shall be rated for a maximum working pressure of 150 micron mesh. The filter shall have an effective filter area of 10 square inches with a gross filter area of 20 square inches. The cartridge housing shall have an integral 3/4-inch ball valve for flushing of the filter without removal of the cartridge.

f. The wye strainer shall have a filter housing constructed of glass reinforced polypropylene plastic and the removable filter cylinder shall be manufactured of stainless steel and shall be 150 micron mesh. The filter shall have an effective filter area of 10 square inches with a gross filter area of 20 square inches. The cartridge housing shall have an integral 3/4-inch ball valve for flushing of the filter without removal of the cartridge.

2.14 FILTERS

The filter housing shall be constructed of glass reinforced polypropylene and the removable filter cylinder shall be manufactured of 150 mesh stainless steel effective filter area of 24 square inches. The cartridge housing shall have an integral 3/4-inch ball valve for flushing, not the filter without removal of the cartridge. Threads shall be 1 inch MPT.

PART 3 EXECUTION

3.1 INSTALLATION

Sprinkler system shall be installed after site grading has been completed. Excavation, trenching, and backfilling for sprinkler system shall be in accordance with the applicable provisions of Site Work for the project. All disturbed areas will be repaired and display positive drainage

3.2 TRENCHING

Trench width shall be 4 inches minimum or 1-1/2 time diameter of pipe, whichever is wider. Backfill shall be hand tamped over excavation. When rock in encountered, trench shall be excavated 4 inches deeper and backfilled with silty sand (SM) or well-graded sand (SW) to pipe grade. Trenches shall not be bored at a depth conforming to bottom of adjacent trenches. Pipe sleeves for bored pipe shall be two pipe diameter larger than sprinkler pipe.

PVC lateral pipes may be pulled into the soil utilizing a vibratory plow device specifically manufactured for pipe pulling. Minimum burial depths equals minimum cover listed above.

Backfill only after lines have been reviewed and tested.

Excavated material is generally satisfactory for backfill. Backfill shall be free from rubbish, vegetable matter, frozen materials, and stones larger than two inches maximum dimension. Remove material not suitable for backfill. Backfill placed next to pipe shall be free of sharp objects which may damage the pipe.

Backfill unsleeved pipe in either of the following manners:

a. Backfill and puddle the lower half of the trench. Allow to dry 24 hours. Backfill the remainder of the trench in 6-inch layers. Compact to density of surrounding soil.

b. Backfill the trench by depositing the backfill material equally on both sides of the pipe in 6-inch layers and compacting to the density of surrounding soil.

Enclose pipe and wiring beneath roadways, walks, curbs, etc, in sleeves. Minimum compaction of backfill for sleeves shall be 95% according to ASTM D 1557. Use of water for compaction around sleeves, "puddling," will not be permitted.

Dress backfilled areas to original grade. Incorporate excess backfill into existing site grades for positive drainage.

Where utilities interfere with irrigation trenching and pipe work, contact the AF Representative for trench depth adjustments.

3.3 PIPING SYSTEM

3.3.1 Cover

Underground piping shall be installed as to meet the minimum depth of backfill cover specified below:

Minimum cover (distance from top of pipe or control wire to finish grade):

a. 14-inch over mainline pipe and over electrical conduit.

b. 16-inch over control wire.

c. 10-inch over lateral pipe to sprinklers and bubblers.

3.3.2 Clearances

Minimum horizontal clearances between lines shall be 4 (101.6 mm) inches for pipe 2 (50.8mm) inches and less; 12 (304.8 mm) inches for 2-1/2 (63.5 mm) inches and larger. Minimum vertical clearances between lines shall be 1 (25.4 mm) inch.

3.3.2.1 Minimum Slope

Minimum slope shall be 6 (152.4 mm) inches per 100 (30.480 M) feet in direction of drain valves.

3.4 SLEEVING AND BORING

Install sleeving at a depth which permits the encased pipe or wiring to remain at the specified burial depth.

Extend sleeve ends six inches beyond the edge of the paved surface. Cover pipe ends and mark with stakes. Mark concrete with a chiseled "X" at sleeve end locations.

Bore for sleeves under obstructions which cannot be removed. Employ equipment and methods designed for horizontal boring.

3.5 PIPING INSTALLATION

3.5.1 Polyvinyl Chloride (PVC) Pipe

a. Solvent-cemented joints shall conform to the requirements of ASTM D 2855.

b. Threaded joints shall be full cut with a maximum of three threads remaining exposed on pipe and nipples. Threaded joints shall be made tight without recourse to wicks or fillers, other than polyetrafluoroethylene thread tape.

c. Piping shall be joined to conform with requirements of ASTM D 2774 or ASTM D 2855, and pipe manufacturer's instructions. Pipe shall be installed in a serpentine (snaked) manner to allow for expansion and contraction in trench before backfilling. Pipes shall be installed at temperatures over 40 degrees F.

3.6 ASSEMBLING PIPE AND FITTINGS

3.6.1 General

a. Keep pipe free from dirt and pipe scale. Cut pipe ends square and debur. Clean pipe ends.

b. Keep ends of assembled pipe capped. Remove caps only when

necessary to continue assembly.

3.6.2 Mainline Pipe and Fittings

a. Use only strap-type friction wrenches for threaded plastic pipe.

b. PVC Solvent Weld Pipe:

(1) Use primer and solvent cement. Join pipe in a manner recommended by the manufacturer and in accordance with accepted industry practices.

(2) Cure for 30 minutes before handling and 24 hours before allowing water in pipe.

(3) Snake pipe from side to side within the trench.

3.6.3 Lateral Pipe and Fittings

a. Use only strap-type friction wrenches for threaded plastic pipe.

b. PVC Solvent Weld Pipe:

(1) Use primer and solvent cement. Join pipe in the manner recommended by manufacturer and in accordance with accepted industry practices.

(2) Cure for 30 minutes before handling and 24 hours before allowing water in pipe.

(3) Snake pipe from side to side within the trench.

3.6.4 Sprinkler Assembly

a. Flush lateral pipe before installing sprinkler assembly.

b. Install per the installation details at locations shown on the drawings.

c. Locate rotary sprinklers 12 inches from center of sprinkler to adjacent walls, fences, or edges of paved areas.

d. Locate spray sprinklers 3 inches from center of sprinkler to adjacent walls, fences, or edges of paved areas.

e. Set sprinklers perpendicular to the finish grade.

f. Supply appropriate nozzle or adjust are of coverage of each sprinkler for best performance.

g. Adjust the radius of throw of each sprinkler for best performance.

3.7 VALVES

3.7.1 Manual Valves

Valves shall be installed in a valve box extending from grade to below valve body, with a minimum of 4 (101.6 mm) inches cover measured from finish grade to top of valve stem.

3.7.2 Automatic Valves

Valve shall be set plumb in a valve box extending from grade to below valve body, with a minimum of 4 (101.6 mm) inch cover measured form grade to top of valve. Install automatic valves beside sprinkler heads with a valve box.

a. Flush mainline before installation of valve assembly.

b. Install where indicated on the drawings. Wire connectors and waterproof sealant shall be used to connect control wires to remote control valve wires. Install connectors and sealant per the manufacturer's recommendations.

c. Install only one RCV to a valve box. Locate valve box at least 6 inches from and align with nearby walls or edges of paved areas. Group RCV assemblies together where practical. Arrange grouped valve boxes in rectangular patterns.

d. Adjust RCV to regulate the downstream operating pressure.

3.7.3 Drain Valves

Entire system shall be manually or automatically drainable. Low points of system shall be equipped with drain valve draining into an excavation containing 1 cubic foot gravel. Gravel shall be covered with building paper then backfilled with excavated material and 6 (152,4 mm) inches of topsoil.

3.8 BACKFLOW PREVENTERS

a. Backflow preventer shall be installed in new connection to existing water distribution system, between connection and control valves.

b. Backflow Prevention Assembly: Install where indicated on the drawings. Install assembly so that its elevation, orientation, access, and drainage conform to the manufacturer's recommendations and applicable health codes.

(1) Reduced Pressure Type

Reduced pressure type shall be installed as follows: Flush pipe lines prior to installing device and protect device by a strainer located upstream. Device shall not be installed in pits or where any part of device could become submerged in standing water.

3.9 CONTROL WIRES

a. Bundle control wires where two or more are in the same trench. Bundle with pipe wrapping tape spaced at 10-foot intervals.

b. Control wiring may be pulled into the soil utilizing a vibratory plow device specifically manufactured for pipe pulling. Minimum burial depth equals minimum cover previously listed.

c. Provide a 24-inch excess length of wire in an 8-inch diameter loop at each 90 change of direction, at both ends of sleeves, and at 100-foot intervals along continuous runs of wiring. Do not tie

wiring loop. Coil 24-inch length of wire within each remote control valve box.

d. Install common ground wire and one control wire for each remote control valve. Multiple valves on a single control wire are not permitted. Install two spare control wires along the entire length of the mainline. Provide a 24-inch length of wire from each end of the spare control wires coiled in the enclosure, and provide a 24-inch length of coiled wire for each spare control wire in a 6-inch round valve box at each distal end of the mainline pipe.

e. If a control wire must be spliced, make splice with wire connectors and waterproof sealant, installed per the manufacturer's instructions. Locate splice in a valve box which contains an irrigation valve assembly, or in a separate 6-inch round valve box.

Use same procedure for connection to valves as for in-line splices.

f. Unless noted on plans, install wire parallel with and under PVC mainline pipe.

g. Protect wire not installed with PVC mainline pipe with a continuous run of warning tape placed in the backfill six inches above the wiring.

3.10 IRRIGATION CONTROLLER UNIT

a. The location of the controller unit as depicted on the drawings is approximate; the AF Representative will determine the exact site location during sprinkler layout review.

b. Lightning protection: Drive an 8-foot copper-clad grounding rod into the soil. If rock prevents driving, bury at least four feet deep. Use one rod for each controller. Connect controller to grounding rod with AWG No. 10 solid conductor copper wire. Secure wire to grounding rod with brass or bronze clamp. Locate the connection in a separate valve box.

c. Attach wire markers to the ends of control wires inside the controller unit housing. Label wires with the identification number (see drawings) of the remote control valve to which the control wire is connected.

d. Connect control wires to the corresponding controller terminal.

3.11 BACKFILL

3.11.1 Minimum Cover

Depth of cover shall be 12 (304.8 mm) inches for 1-1/4 (31.8 mm) inch pipe or smaller; and 12 (304.8 mm) inches for low-voltage wires. Remainder of trench or pipe cover shall be filled to within 3 (76.2 mm) inches of top-with excavated soil, and compact soil with plate hand-held compactors to same density as undisturbed adjacent soil.

3.12 IRRIGATION SYSTEM TO BE INSTALLED PRIOR TO PLANTING MATERIALS (UNLESS OTHERWISE DIRECTED)

3.12.1 Adjustment

After grading, seeding and rolling of planted areas, sprinkler heads shall be adjusted flush with finished grade. Adjustments shall be made by providing new nipples of proper length or by use of heads having an approved device, integral with head, which will permit adjustment in height of head without changing piping.

3.12.2 Cleaning of Piping

Prior to the hydrostatic and operation tests, the interior of the pipe shall be flushed with clean water until pipe is free of all foreign materials. Flushing and cleaning out of system pipe, valves, and components shall not be considered completed until witnessed and accepted by Contracting Officer.

3.12.3 Field Tests

All instruments, equipment, facilities, and labor required to conduct the tests shall be provided by Contractor.

3.12.3.1 Hydrostatic Pressure Test

a. Notify the AF Representative three days in advance of testing.

b. Pipelines jointed with rubber gaskets or threaded connections may be subjected to a pressure test at any time after partial completion of backfill. Pipelines jointed with solvent-welded PVC joints shall be allowed to cure at least 24 hours before testing.

c. Subsections of mainline pipe may be tested independently, subject to the review of the AF Representative.

d. Furnish clean, clear water, pumps, labor, fittings, and equipment necessary to conduct tests or retest.

e. Subject mainline pipe to a hydrostatic pressure equal to 60 psi for two hours. Leakage will be detected by visual inspection. Replace defective pipe, fitting, joint, valve, or appurtenance. Repeat the test until the pipe passes test.

3.12.3.2 Coverage Test

a. Activate each remote control valve in sequence. The AF Representative will visually observe water application patterns.

b. Adjust or move system components to correct coverage deficiencies. Repeat the test until the system passes test.

c. Cement or caulking to seal leaks is prohibited.

3.12.3.3 Operation Test

At conclusion of pressure test, sprinkler heads or emitter heads, quick coupling assemblies, and hose valves shall be installed and entire system tested for operation under normal operating pressure. Operation test consists of the system operating through at least one complete programmed cycle for all areas to be sprinkled.

3.13 POSTING FRAMED INSTRUCTIONS

Framed instructions containing wiring and control diagrams under glass or in laminated plastic shall be posted where directed. Condensed operating instructions, prepared in typed form, shall be framed as specified above and posted beside the diagrams. The framed instructions shall be posted before acceptance testing of the system. After as-built drawings are approved by CE engineer, controller charts and programming schedule shall be prepared. One chart for each controller shall be supplied. Chart shall be reduced drawing of actual as-built system that will fit the maximum dimensions inside controller housing. Black line print for chart and a different pastel or transparent color shall indicate each station area of coverage. After chart is completed and approved for final acceptance, chart shall be sealed between two 20-mil pieces of clear plastic.

3.14 FIELD TRAINING

A field training course shall be provided for designed operating and maintenance staff members. Training shall be provided for a total period of 1 hour to normal working time and shall start after the system is functionally complete prior to final acceptance tests. Field training shall cover all of the items contained in the operating and maintenance manuals.

3.15 CLEANUP

Due to the high visibility of the project site, daily cleanup of all debris and surplus materials resulting form the work shall be removed off-site.

-- End of Section --

SECTION 02821

FENCING
07/01

PART 1 GENERAL

1.1 REFERENCES

The publications listed below form a part of this specification to the extent referenced. The publications are referred to in the text by basic designation only.

AMERICAN SOCIETY FOR TESTING AND MATERIALS (ASTM)

ASTM A 153/A 153M	(2000) Zinc-Coating (Hot Dip) on Iron and Steel Hardware
ASTM A 392	(1996) Zinc-Coated Steel Chain-Link Fence Fabric
ASTM A 491	(1996) Aluminum-Coated Steel Chain-Link Fence Fabric
ASTM A 780	(2000) Repair of Damaged and Uncoated Areas of Hot-Dipped Galvanized Coatings
ASTM A 824	(1995) Metallic-Coated Steel Marcelled Tension Wire for Use With Chain Link Fence
ASTM C 94/C 94M	(2000) Ready-Mixed Concrete
ASTM F 626	(1996a) Fence Fittings
ASTM F 883	(1997) Padlocks
ASTM F 900	(1994) Industrial and Commercial Swing Gates
ASTM F 1043	(2000) Strength and Protective Coatings on Metal Industrial Chain-Link Fence Framework
ASTM F 1083	(1997) Specification for Pipe, Steel, Hot-Dipped Zinc-Coated (Galvanized) Welded, for Fence Structures
ASTM F 1184	(1994) Industrial and Commercial Horizontal Slide Gates

1.2 SUBMITTALS

Government approval is required for submittals with a "G" designation; submittals not having a "G" designation are for information only. When used, a designation following the "G" designation identifies the office that will review the submittal for the Government. The following shall be submitted in accordance with Section 01330 SUBMITTAL PROCEDURES:

SD-07 Certificates

Chain Link Fence

Statement, signed by an official authorized to certify on behalf of the manufacturer, attesting that the chain link fence and component materials meet the specified requirements.

1.3 APPROVAL OF POLYVINYL CHLORIDE-COATED FENCE MATERIALS

Polyvinyl chloride-coated fence materials shall be thoroughly inspected for cracking, peeling, and conformance with the specifications by the Contracting Officer's Representative prior to installation. Any fence materials rejected by the Contracting Officer's Representative shall be replaced by the contractor with approved materials at no additional cost to the Government.

PART 2 PRODUCTS

2.1 FENCE FABRIC

Fence fabric shall conform to the following:

2.1.1 Chain Link Fence Fabric

ASTM A 392, Class 2, zinc-coated steel wire with minimum coating weight of 2.0 ounces of zinc per square foot of coated surface, or ASTM A 491, Type I, aluminum-coated steel wire. Fabric shall be fabricated of 9 gauge wire woven in 2 inch mesh. Fabric height shall be 6 feet. Fabric shall be twisted and barbed on the top selvage and knuckled on the bottom selvage.

2.1.2 Force Protection Horizontal Cover

Provide and install woven wire fencing horizontal to the ground plane with required accessible connections, posts and structural elements to support the woven wire fence. The cover shall be self-supporting and located within 1-3/4 inch from all the vertical plane of the mechanical and electrical equipment. Do not attach cover to the mechanical or electrical equipment. Screen wall gates shall be self-supporting and attach to the horizontal cover structure and posts where a 1-3/4 inch sphere cannot pass through any openings. Height of the cover above the slab shall be a minimum 7 feet 0 inches. Contractor can attach to masonry screen walls.

All fencing, posts and structural elements shall be removable for outdoor mechanical and electrical equipment replacement.

Before installation, coordinate with Contract Officer for location of support posts to avoid interference of servicing of equipment. Height of the cover shall be 8 inches below screen wall.

2.2 GATES

ASTM F 900 and/or ASTM F 1184. Gate shall be the type and swing shown. Gate frames shall conform to strength and coating requirements of ASTM F 1083 for Group IA, steel pipe, with external coating Type A, nominal pipe size (NPS) 1-1/2. Gate frames shall conform to strength and coating requirements of ASTM F 1043, for Group IC, steel pipe with external coating Type A or Type B, nominal pipe size (NPS) 1-1/2. Gate fabric shall be as

specified for chain link fabric. Gate leaves more than 8 feet wide shall have either intermediate members and diagonal truss rods or shall have tubular members as necessary to provide rigid construction, free from sag or twist. Gate leaves less than 8 feet wide shall have truss rods or intermediate braces. Intermediate braces shall be provided on all gate frames with an electro-mechanical lock. Gate fabric shall be attached to the gate frame by method standard with the manufacturer except that welding will not be permitted. Latches, hinges, stops, keepers, rollers, and other hardware items shall be furnished as required for the operation of the gate. Latches shall be arranged for padlocking so that the padlock will be accessible from both sides of the gate. Stops shall be provided for holding the gates in the open position. For high security applications, each end member of gate frames shall be extended sufficiently above the top member to carry three strands of barbed wire in horizontal alignment with barbed wire strands on the fence.

2.3 POSTS

2.3.1 Metal Posts for Chain Link Fence

ASTM F 1083, zinc-coated. Group IA, with external coating Type A steel pipe. Group IC steel pipe, zinc-coated with external coating Type A or Type B and Group II , roll-formed steel sections, shall meet the strength and coating requirements of ASTM F 1043. Group III, ASTM F 1043 steel H-section may be used for line posts in lieu of line post shapes specified for the other classes. Sizes shall be as shown on the drawings. Line posts and terminal (corner, gate, and pull) posts selected shall be of the same designation throughout the fence. Gate post shall be for the gate type specified subject to the limitation specified in ASTM F 900 and/or ASTM F 1184.

2.4 BRACES AND RAILS

ASTM F 1083, zinc-coated, Group IA, steel pipe, size NPS 1-1/4. Group IC steel pipe, zinc-coated, shall meet the strength and coating requirements of ASTM F 1043. Group II, formed steel sections, size 1-21/32 inch, conforming to ASTM F 1043, may be used as braces and rails if Group II line posts are furnished.

2.5 WIRE

2.5.1 Tension Wire

Tension wire shall be Type I or Type II, Class 2 coating, in accordance with ASTM A 824.

2.6 ACCESSORIES

ASTM F 626. Ferrous accessories shall be zinc or aluminum coated. Truss rods shall be furnished for each terminal post. Truss rods shall be provided with turnbuckles or other equivalent provisions for adjustment. Tie wire for attaching fabric to rails, braces, and posts shall be 9 gauge steel wire and match the coating of the fence fabric. Miscellaneous hardware coatings shall conform to ASTM A 153/A 153M unless modified.

2.7 CONCRETE

ASTM C 94/C 94M, using 3/4 inch maximum size aggregate, and having minimum compressive strength of 3000 psi at 28 days. Grout shall consist of one

part portland cement to three parts clean, well-graded sand and the minimum amount of water to produce a workable mix.

2.8 PADLOCKS

Padlocks shall conform to ASTM F 883, Type PO1, Options B and G, Grade 6, Size 1-3/4 inch. All padlocks shall be keyed alike and all padlocks shall be keyed into master key system as specified in Section 08710 DOOR HARDWARE.

2.9 FOD FENCE

Enclose the project work area and contractor lay-down area with a 6 feet high chain link fence and gates with brown, UV light resistant, plastic fabric mesh netting, (similar to tennis court or other screening). Remove the fence upon completion and acceptance of the work. Intent is to contain FOD on the construction site. Fence and fabric shall be secured to withstand jet blast from on going activities on the apron. FOD fence and fabric shall meet the following criteria:

a. Chain-link: Zinc-coated steel, 9-gage, 2 inch mesh. Height of fabric shall be same as fence.

b. FOD fabric woven high tension polyester fabric having 15% open area, with grommets spaced 18 inches apart along the top and bottom edges. Fabric shall be brown in color.

c. Posts and braces: Line posts: Class 1, steel pipe, grade B. End, corner, and pull posts: Class 1, steel pipe, grade B. Braces: Class 1, steel pipe, grade B, 2 inch minimum size.

d. Fencing accessories: Provide mounting clips and wire ties constructed of the same material as the fencing fabric.

e. Concrete: Per Section 03300 CAST IN PLACE CONCRETE, using 3/4 inch maximum-size aggregate, and having minimum compressive strength of 3000 psi at 28 days.

f. Grout: Provide grout of proportions one part portland cement to three parts clean, well-graded sand and a minimum amount of water to produce a workable mix.

g. Site preparation: Clearing and grading, clear fence line of trees, brush, and other obstacles to install fencing. Establish a graded, compacted fence line prior to fencing installation. Compact fill used to establish fence line. Dispose of waste material on station, as directed.

h. Fence installation: Install fence on prepared surfaces to line and grade and as indicated on drawings. Secure fastening and hinge hardware in place to fence framework by peening or welding. Allow for proper operation of components. Coast peened or welded areas with a repair coating matching original coating. Install fence in accordance with fence manufacturer's written installation instructions except as modified herein.

1. Post spacing provide line posts spaced equidistantly apart, not exceeding 10 feet on center (OC). Provide gate posts spaced as necessary for size of gate openings. Do not exceed 500 feet on straight runs between braced posts. Provide corner or pull posts,

with bracing in both directions, for changes in direction of 15 feet or more, or for abrupt changes in grade. Provide drawings showing location of corner, end, and pull posts.

2. Post settings: Set posts plumb. Posts shall be anchored as indicated on drawings. brace corner, end, and pull posts to nearest post with a horizontal brace used as a compression member, placed at least 12 inches below top of fence, and a diagonal truss rod and truss tightener used as a tension member.

3. Top and bottom tension wires: Install top and bottom tension wires before installing chain-link fabric, and pull wires taut. Place top and bottom tension wires within 8 inches of respective fabric line.

4. Fabric: Pull fabric taut and secure fabric to top wire and bottom wire, close to both sides of each post and at maximum intervals of 24 inches OC. Secure fabric to posts using stretcher bars, ties or clips spaced 15 inches OC, or by integrally weaving to integral fastening loops of end, corner, and pull posts for full length of each post. Install fabric on opposite side of posts from area being secured. Install fabric so that bottom of fabric is 2 inches above ground level. Install fence fabric to provide approximately 2 inches deflection at center of fabric span between two posts. When a force of approximately 30 pounds is applied perpendicular to fabric, fabric should return to its original position when force is removed.

5. Post caps: Install post caps as recommended by the manufacturer.

6. Removal: Remove fence at completion of project.

PART 3 EXECUTION

3.1 INSTALLATION

Fence shall be installed to the lines and grades indicated. The area on either side of the fence line shall be cleared to the extent indicated. Line posts shall be spaced equidistant at intervals not exceeding 10 feet. Terminal (corner, gate, and pull) posts shall be set at abrupt changes in vertical and horizontal alignment. Fabric shall be continuous between terminal posts; however, runs between terminal posts shall not exceed 500 feet. Any damage to galvanized surfaces, including welding, shall be repaired with paint containing zinc dust in accordance with ASTM A 780.

3.2 EXCAVATION

Post holes shall be cleared of loose material. Waste material shall be spread where directed. The ground surface irregularities along the fence line shall be eliminated to the extent necessary to maintain a 2 inch clearance between the bottom of the fabric and finish grade.

3.3 POST INSTALLATION

3.3.1 Posts for Chain Link Fence

Posts shall be set plumb and in alignment. Except where solid rock is encountered, posts shall be set in concrete to the depth indicated on the

drawings. Where solid rock is encountered with no overburden, posts shall be set to a minimum depth of 18 inches in rock. Where solid rock is covered with an overburden of soil or loose rock, posts shall be set to the minimum depth indicated on the drawing unless a penetration of 18 inches in solid rock is achieved before reaching the indicated depth, in which case depth of penetration shall terminate. All portions of posts set in rock shall be grouted. Portions of posts not set in rock shall be set in concrete from the rock to ground level. Posts set in concrete shall be set in holes not less than the diameter shown on the drawings. Diameters of holes in solid rock shall be at least 1 inch greater than the largest cross section of the post. Concrete and grout shall be thoroughly consolidated around each post, shall be free of voids and finished to form a dome. Concrete and grout shall be allowed to cure for 72 hours prior to attachment of any item to the posts. Group II line posts may be mechanically driven, for temporary fence construction only, if rock is not encountered. Driven posts shall be set to a minimum depth of 3 feet and shall be protected with drive caps when being set. For high security fences, fence post rigidity shall be tested by applying a 50 pound force on the post, perpendicular to the fabric, at 5 feet above ground; post movement measured at the point where the force is applied shall be less than or equal to 3/4 inch from the relaxed position; every tenth post shall be tested for rigidity; when a post fails this test, further tests on the next four posts on either side of the failed post shall be made; all failed posts shall be removed, replaced, and retested at the Contractor's expense.

3.4 RAILS

3.4.1 Top Rail

Top rail shall be supported at each post to form a continuous brace between terminal posts. Where required, sections of top rail shall be joined using sleeves or couplings that will allow expansion or contraction of the rail. Top rail, if required for high security fence, shall be installed as indicated on the drawings.

3.4.2 Bottom Rail

The bottom rail shall be bolted to double rail ends and double rail ends shall be securely fastened to the posts. Bolts shall be peened to prevent easy removal. Bottom rail shall be installed before chain link fabric.

3.5 BRACES AND TRUSS RODS

Braces and truss rods shall be installed as indicated and in conformance with the standard practice for the fence furnished. Horizontal (compression) braces and diagonal truss (tension) rods shall be installed on fences over 6 feet in height. A center brace or 2 diagonal truss rods shall be installed on 12 foot fences. Braces and truss rods shall extend from terminal posts to line posts. Diagonal braces shall form an angle of approximately 40 to 50 degrees with the horizontal. No bracing is required on fences 6 feet high or less if a top rail is installed.

3.6 TENSION WIRES

Tension wires shall be installed along the top and bottom of the fence line and attached to the terminal posts of each stretch of the fence. Top tension wires shall be installed within the top 4 inches of the installed fabric. Bottom tension wire shall be installed within the bottom 6 inches of the installed fabric. Tension wire shall be pulled taut and shall be

free of sag.

3.7 CHAIN LINK FABRIC

Chain link fabric shall be installed on the side of the post indicated. Fabric shall be attached to terminal posts with stretcher bars and tension bands. Bands shall be spaced at approximately 15 inch intervals. The fabric shall be installed and pulled taut to provide a smooth and uniform appearance free from sag, without permanently distorting the fabric diamond or reducing the fabric height. Fabric shall be fastened to line posts at approximately 15 inch intervals and fastened to all rails and tension wires at approximately 12 inch intervals. Fabric shall be cut by untwisting and removing pickets. Splicing shall be accomplished by weaving a single picket into the ends of the rolls to be joined. The bottom of the installed fabric shall be 2 plus or minus 1/2 inch above the ground. For high security fence, after the fabric installation is complete, the fabric shall be exercised by applying a 50 pound push-pull force at the center of the fabric between posts; the use of a 30 pound pull at the center of the panel shall cause fabric deflection of not more than 2-1/2 inches when pulling fabric from the post side of the fence; every second fence panel shall meet this requirement; all failed panels shall be resecured and retested at the Contractor's expense.

3.8 GATE INSTALLATION

Gates shall be installed at the locations shown. Hinged gates shall be mounted to swing as indicated. Latches, stops, and keepers shall be installed as required. Padlocks shall be attached to gates or gate posts with chains. Hinge pins, and hardware shall be welded or otherwise secured to prevent removal.

3.9 GROUNDING

Fences crossed by overhead powerlines in excess of 600 volts shall be grounded as required by Federal, State, and Local Regulations.

-- End of Section --

SECTION 02922

SODDING
05/01

PART 1 GENERAL

1.1 REFERENCES

AMERICAN SOCIETY FOR TESTING AND MATERIALS (ASTM)

ASTM C 602	(1995a) Agricultural Liming Materials
ASTM D 4972	(1995a) pH of Soils
ASTM D 5268	(1992; R 1996) Topsoil Used for Landscaping Purposes
ASTM D 5883	(1996el) Use of Rotary Kiln Produced Expanded Shale, Clay or Slate (ESCS) as a Mineral Amendment in Topsoil Used for Landscaping and Related Purposes

1.2 SUBMITTALS

Government approval is required for submittals with a "G" designation; submittals not having a "G" designation are for information only. When used, a designation following the "G" designation identifies the office that will review the submittal for the Government. The following shall be submitted in accordance with Section 01330 SUBMITTAL PROCEDURES:

SD-03 Product Data

Equipment
Chemical Treatment Material

A listing of equipment to be used for the sodding operation. Manufacturer's literature including physical characteristics, application and installation instructions for equipment and chemical treatment material.

Delivery

Delivery schedule.

Finished Grade and Topsoil

Finished grade status.

Topsoil

Availability of topsoil from the stripping and stock piling operation.

Quantity Check

Bag count or bulk weight measurements of material used compared with area covered to determine the application rate and quantity installed. The quantity of sod used shall be compared against the total area installed.

Sod Establishment Period

Calendar time period for the sod establishment period. When there is more than one sod establishment period, the boundaries of the sodded area covered for each period shall be described.

Maintenance Record

Maintenance work performed, area repaired or reinstalled, diagnosis for unsatisfactory stand of grass plants.

Application of Pesticide; G

Pesticide treatment plan with sequence of treatment work with dates and times. The pesticide trade name, EPA registration number, chemical composition, formulation, concentration of original and diluted material, application rate of active ingredients, method of application, area treated, amount applied; and the name and state license number of the state certified applicator shall be included.

SD-04 Samples

Delivered Topsoil

Samples taken from several locations at the source.

Soil Amendments

A 10 pound sample.

SD-06 Test Reports

Equipment Calibration

Certification of calibration tests conducted on the equipment used in the sodding operation.

Soil Test

Certified reports of inspections and laboratory tests, prepared by an independent testing agency, including analysis and interpretation of test results. Each report shall be properly identified. Test methods used and compliance with recognized test standards shall be described.

SD-07 Certificates

Sod
Topsoil
pH Adjuster
Fertilizer
Organic Material
Soil Conditioner

Pesticide; G

Prior to the delivery of materials, certificates of compliance attesting that materials meet the specified requirements. Certified copies of the material certificates shall include the following:

a. Sod. Classification, botanical name, common name, mixture percentage of species, percent purity, quality grade, field location and state certification.

b. Topsoil. Particle size, pH, organic matter content, textural class, soluble salts, chemical and mechanical analyses.

c. pH Adjuster. Calcium carbonate equivalent and sieve analysis.

d. Fertilizer. Chemical analysis and composition percent.

e. Organic Material: Composition and source.

f. Soil Conditioner: Composition and source.

g. Pesticide. EPA registration number and registered uses.

1.3 SOURCE INSPECTION

The sources of sod material and delivered topsoil shall be subject to inspection.

1.4 DELIVERY, INSPECTION, STORAGE, AND HANDLING

1.4.1 Delivery

A delivery schedule shall be provided at least 10 calendar days prior to the first day of delivery.

1.4.1.1 Sod

Sod shall be protected during delivery to prevent desiccation, internal heat buildup, or contamination.

1.4.1.2 Delivered Topsoil

Prior to the delivery of any topsoil, its availability shall be verified in paragraph TOPSOIL. A soil test shall be provided for topsoil delivered to the site.

1.4.1.3 Soil Amendments

Soil amendments shall be delivered to the site in the original, unopened containers bearing the manufacturer's chemical analysis. In lieu of containers, soil amendments may be furnished in bulk. A chemical analysis shall be provided for bulk deliveries.

1.4.1.4 Pesticides

Pesticide material shall be delivered to the site in the original, unopened containers bearing legible labels indicating the EPA registration number

and the manufacturer's registered uses.

1.4.2 Inspection

Sod shall be inspected upon arrival at the job site for conformity to species. Sod shall be checked for visible broadleaf weeds, and a visible consistency with no obvious patches of foreign grasses that exceed 2 percent of the canopy. Sod that is heating up, dry, moldy, yellow, irregularly shaped, torn, or of uneven thickness shall be rejected. Other materials shall be inspected for compliance with specified requirements. Open soil amendment containers or wet soil amendments; topsoil that contains slag, cinders, stones, lumps of soil, sticks, roots, trash or other material over a minimum 1-1/2 inch diameter; and topsoil that contains viable plants and plant parts, shall be rejected. Unacceptable materials shall be removed from the job site.

1.4.3 Storage

1.4.3.1 Sod

Sod shall be stored in designated areas and kept in a moist condition by watering with a fine mist, and covered with moist burlap, straw, or other covering. Covering shall allow air to circulate, preventing internal heat from building up. Sod shall be protected from exposure to wind and direct sunlight until installed.

1.4.3.2 Other Material Storage

Materials shall be stored in designated areas. Lime and fertilizer shall be stored in cool, dry locations, away from contaminants. Chemical treatment material shall be stored according to manufacturer's instructions and not with sod operation materials.

1.4.4 Handling

Sod shall not be damaged during handling. Except for bulk deliveries, materials shall not be dropped or dumped from vehicles.

1.4.5 Time Limitation

Time limitation between harvesting and installing sod shall be a maximum 36 hours.

PART 2 PRODUCTS

2.1 SOD

2.1.1 Sod Classification

State-approved sod shall be provided as classified by applicable state laws. Sod section shall be sized to permit rolling and lifting without breaking.

2.1.2 Grass Species

Grass species shall be proportioned as follows:

Botanical Name	Common Name
Cynodon Dactylon	Tifton 419 Bermuda "Tifton 419" Hybrid

2.1.3 Quality

Sod shall be relatively free of thatch, diseases, nematodes, soil-borne insects, weeds or undesirable plants, stones larger than 1 inch in diameter, woody plant roots, and other materials detrimental to a healthy stand of grass plants. Broadleaf weeds and patches of foreign grasses shall be a maximum 2 percent of the sod section.

2.1.4 Thickness

Sod shall be machine cut to a minimum 1-3/8 inch thickness. Measurement for thickness shall exclude top growth and thatch.

2.1.5 Anchors

Sod anchors shall be as recommended by the sod supplier.

2.1.6 Substitutions

Substitutions will not be allowed without written request and approval from the Contracting Officer.

2.2 TOPSOIL

Topsoil shall be as defined in ASTM D 5268. When available, the topsoil shall be the existing surface soil stripped and stockpiled onsite in accordance with Section 02300 EARTHWORK. When additional topsoil is required beyond the available topsoil from stripping operation, topsoil shall be delivered and amended as recommended by the soil test for the sod species specified. Topsoil shall be free from slag, cinders, stones, lumps of soil, sticks, roots, trash, or other material over a maximum 1-1/2 inch diameter. Topsoil shall be free from viable plants and plant parts.

2.3 SOIL AMENDMENTS

Soil amendments shall consist of pH adjuster, fertilizer, organic material, and soil conditioners meeting the following requirements. Vermiculite shall not be used.

2.3.1 pH Adjuster

The pH adjuster shall be an agricultural liming material in accordance with ASTM C 602. These materials may be burnt lime, hydrated lime, ground limestone, or shells. The pH adjuster shall be used to create a favorable soil pH for the plant material specified.

2.3.1.1 Limestone

Limestone material shall contain a minimum calcium carbonate equivalent of 80 percent. Gradation: A minimum 95 percent shall pass through a No. 8 sieve and a minimum 55 percent shall pass through a No. 60 sieve. To raise soil pH, ground limestone shall be used.

2.3.1.2 Hydrated Lime

Hydrated lime shall contain a minimum calcium carbonate equivalent of 110 percent. Gradation: A minimum 100 percent shall pass through a No. 8 sieve and a minimum 97 percent shall pass through a No. 60 sieve.

2.3.1.3 Burnt Lime

Burnt lime shall contain a minimum calcium carbonate equivalent of 140 percent. Gradation: A minimum 95 percent shall pass through a No. 8 sieve and a minimum 35 percent shall pass through a No. 60 sieve.

2.3.2 Fertilizer

It shall be as recommended by the soil test. Fertilizer shall be controlled release commercial grade, free flowing, uniform in composition, and consist of a nitrogen-phosphorus-potassium ratio. The fertilizer shall be derived from sulphur coated urea, urea formaldehyde, plastic or polymer coated pills, or isobutylenediurea (IBDU). Fertilizer shall be balanced with the inclusion of trace minerals and micro-nutrients.

2.3.3 Nitrogen Carrier Fertilizer

It shall be as recommended by the soil test. Nitrogen carrier fertilizer shall be commercial grade, free flowing, and uniform in composition. The fertilizer may be a liquid nitrogen solution.

2.3.4 Organic Material

Organic material shall consist of either bonemeal, rotted manure, decomposed wood derivatives, recycled compost, or worm castings.

2.3.4.1 Bonemeal

Bonemeal shall be finely ground, steamed bone product containing from 2 to 4 percent nitrogen and 16 to 40 percent phosphoric acid.

2.3.4.2 Rotted Manure

Rotted manure shall be unleached horse, chicken or cattle manure containing a maximum 25 percent by volume straw, sawdust, or other bedding materials. Manure shall contain no chemicals or ingredients harmful to plants. The manure shall be heat treated to kill weed seeds and be free of stones, sticks, and soil.

2.3.4.3 Decomposed Wood Derivatives

Decomposed wood derivatives shall be ground bark, sawdust, yard trimmings, or other wood waste material free of stones, sticks, soil, and toxic substances harmful to plants, fully composted or stabilized with nitrogen.

2.3.4.4 Recycled Compost

Compost shall be a well decomposed, stable, weed free organic matter source. Compost shall be derived from food; agricultural or industrial residuals; biosolids (treated sewage sludge); yard trimmings; or source-separated or mixed solid waste. The compost shall possess no objectionable odors and shall not resemble the raw material from which it

was derived. The material shall not contain substances toxic to plants. Gradation: The compost material shall pass through a 3/8 inch screen, possess a pH of 5.5 to 8.0, and have a moisture content between 35-55 percent by weight. The material shall not contain more than 1 percent or less by weight of man-made foreign matter. Compost shall be cleaned of plastic materials larger than 2 inches in length. Compost shall conform to EPA requirements in accordance with Section 01670 RECYCLED / RECOVERED MATERIALS.

2.3.4.5 Worm Castings

Worm castings shall be screened from worms and food source, and shall be commercially packaged.

2.3.5 Soil Conditioner

Soil conditioner shall be sand, super absorbent polymers, calcined clay, or gypsum for use singly or in combination to meet the requirements for topsoil.

2.3.5.1 Sand

Sand shall be clean and free of toxic materials. Gradation: A minimum 95 percent by weight shall pass a No. 10 sieve and a minimum 10 percent by weight shall pass a No. 16 sieve. Greensand shall be balanced with the inclusion of trace minerals and nutrients.

2.3.5.2 Super Absorbent Polymers

To improve water retention in soils, super absorbent polymers shall be sized and applied according to the manufacturer's recommendations. Polymers shall be added as a soil amendment and be cross-linked polyacrylamide with an absorption capacity of 250-400 times its weight.

2.3.5.3 Calcined Clay

Calcined clay shall be granular particles produced from montmorillonite clay calcined to minimum temperature of 1200 degrees F. Gradation: A minimum 90 percent passing No. 8 sieve; a minimum 99 percent shall be retained on a No. 60 sieve; and a maximum 2 percent shall pass a No. 100 sieve. Bulk density: A maximum 40 pounds per cubic foot.

2.3.5.4 Gypsum

Gypsum shall be commercially packaged, free flowing, and a minimum 95 percent calcium sulfate by volume.

2.3.5.5 Expanded Shale, Clay, or Slate (ESCS)

Rotary kiln produced ESCS material shall be in conformance with ASTM D 5883.

2.4 WATER

Water shall be the responsibility of the Contractor unless otherwise noted. Water shall not contain elements toxic to plant life.

2.5 PESTICIDE

Pesticide shall be insecticide, herbicide, fungicide, nematocide,

rodenticide or miticide. For the purpose of this specification, a soil fumigant shall have the same requirements as a pesticide. The pesticide material shall be EPA registered and approved.

PART 3 EXECUTION

3.1 INSTALLING SOD TIME AND CONDITIONS

3.1.1 Sodding Time

Sod shall be installed from April to June for spring establishment; from July to August for summer establishment; and from September to November for fall establishment.

3.1.2 Sodding Conditions

Sodding operations shall be performed only during periods when beneficial results can be obtained. When drought, excessive moisture or other unsatisfactory conditions prevail, the work shall be stopped when directed. When special conditions warrant a variance to the sodding operations, proposed alternate times shall be submitted for approval.

3.1.3 Equipment Calibration

Immediately prior to the commencement of sodding operations, calibration tests shall be conducted on the equipment to be used. These tests shall confirm that the equipment is operating within the manufacturer's specifications and will meet the specified criteria. The equipment shall be calibrated a minimum of once every day during the operation. Provide calibration test results within one week of testing.

3.1.4 Soil Test

Delivered topsoil, existing soil in smooth graded areas, and stockpiled topsoil shall be tested in accordance with ASTM D 5268 and ASTM D 4972 for determining the particle size, pH, organic matter content, textural class, chemical analysis, soluble salts analysis, and mechanical analysis. Sample collection on site shall be random over the entire site. Sample collection for stockpiled topsoil shall be at different levels in the stockpile. The soil shall be free from debris, noxious weeds, toxic substances, or other materials harmful to plant growth. The test shall determine the quantities and type of soil amendments required to meet local growing conditions for the sod species specified.

3.2 SITE PREPARATION

3.2.1 Finished Grade and Topsoil

Prior to the commencement of the sodding operation, the Contractor shall verify that finished grades are as indicated on drawings; the placing of topsoil, smooth grading, and compaction requirements have been completed in accordance with Section 02300 EARTHWORK.

3.2.2 Application of Soil Amendments

3.2.2.1 Applying pH Adjuster

The pH adjuster shall be applied at the rate recommended by the soil test. The pH adjuster shall be incorporated into the soil to a maximum 4 inch

depth or may be incorporated as part of the tillage operation.

3.2.2.2 Applying Fertilizer

The fertilizer shall be applied at the rate recommended by the soil test. Fertilizer shall be incorporated into the soil to a maximum 4 inch depth or may be incorporated as part of the tillage or hydroseeding operation.

3.2.2.3 Applying Soil Conditioner

The soil conditioner shall be as recommended by the soil test. The soil conditioner shall be spread uniformly over the soil a minimum 1 inch depth and thoroughly incorporated by tillage into the soil to a maximum 4 inches depth.

3.2.2.4 Applying Super Absorbent Polymers

Polymers shall be spread uniformly over the soil as recommended by the manufacturer and thoroughly incorporated by tillage into the soil to a maximum 2 inches deep prior to placement of sod.

3.2.3 Tillage

Soil on slopes up to a maximum 3-horizontal-to-1-vertical shall be tilled to a minimum 4 inches deep. On slopes between 3-horizontal-to-1-vertical and 1-horizontal-to-1 vertical, the soil shall be tilled to a minimum 2 inches deep by scarifying with heavy rakes, or other method. Rototillers shall be used where soil conditions and length of slope permit. On slopes 1-horizontal-to-1 vertical and steeper, no tillage is required. Drainage patterns shall be maintained as indicated on drawings. Areas compacted by construction operations shall be completely pulverized by tillage. Soil used for repair of surface erosion or grade deficiencies shall conform to topsoil requirements. The pH adjuster, fertilizer, and soil conditioner may be applied during this procedure.

3.2.4 Prepared Surface

3.2.4.1 Preparation

The prepared surface shall be a maximum 1 inch below the adjoining grade of any surfaced area. New surfaces shall be blended to existing areas. The prepared surface shall be rolled and completed with a light raking to remove from the surface debris and stones over a minimum 5/8 inch in any dimension.

3.2.4.2 Protection

Areas within the prepared surface shall be protected from compaction or damage by vehicular or pedestrian traffic and surface erosion.

3.3 INSTALLATION

Prior to installing sod, any previously prepared surface compacted or damaged shall be reworked to meet the requirements of paragraph SITE PREPARATION. Areas shall be sodded as indicated. Adequate soil moisture shall be ensured prior to sodding by spraying water on the area to be sodded and wetting the soil to a maximum 1 inch depth.

3.3.1 Installing Sod

Rows of sod sections shall be placed parallel to and tightly against each other. Joints shall be staggered laterally. The sod sections shall not be stretched or overlapped. All joints shall be butted tight. Voids and air drying of roots shall be prevented. Sod sections shall be laid across the slope on long slopes. Sod sections shall be laid at right angles to the flow of water in ditches. Sod sections shall be anchored on slopes steeper than 3-horizontal-to-1-vertical. Anchoring may be required when surface weight or pressure upon placed sod sections is anticipated to cause lateral movement. Sod anchors shall be placed a minimum 2 feet on center with a minimum 2 anchors per sod section.

3.3.2 Finishing

Displacement of the sod shall be prevented by tamping or rolling the sod in place and knitting the sod to the soil. Air pockets shall be eliminated and a true and even surface shall be provided. Frayed edges shall be trimmed, and holes or missing corners shall be patched with sod.

3.3.3 Rolling

The entire area shall be firmed with a roller not exceeding 90 pounds per foot roller width. Slopes over a maximum 3-horizontal-to-1 vertical shall not be rolled.

3.3.4 Watering Sod

Watering shall be started immediately after completing each day of installing sod. Water shall be applied at least 3 times per week to supplement rainfall, at a rate sufficient to ensure moist soil conditions to a minimum depth of 1 inch. Run-off, puddling, and wilting shall be prevented. Unless otherwise directed, watering trucks shall not be driven over turf areas. Watering of other adjacent areas or plant material shall be prevented.

3.4 TEMPORARY SODDING

When directed during contract delays affecting the sodding operation or when a quick cover is required to prevent surface erosion, the areas designated shall be sodded in accordance with this section.

3.4.1 Soil Amendments, Tillage and Watering

When soil amendments have not been applied to the area, the quantity of 1/2 of the required soil amendments shall be applied and the area tilled in accordance with paragraph SITE PREPARATION. The area shall be watered in accordance with paragraph Watering Sod as required.

3.4.2 Remaining Soil Amendments

The remaining soil amendments shall be applied in accordance with the paragraph Tillage when the surface is prepared for installing sod.

3.5 QUANTITY CHECK

For materials provided in bags, the empty bags shall be retained for recording the amount used. For materials provided in bulk, the weight certificates shall be retained as a record of the amount used. The amount of the material used shall be compared with the total area covered to

determine the rate of application. The quantity of sod used shall be compared against the total area established with sod. Differences between the quantity applied and the quantity specified shall be adjusted as directed.

3.6 APPLICATION OF PESTICIDE

When application of a pesticide becomes necessary to remove a pest or disease, a pesticide treatment plan shall be submitted and coordinated with the installation pest management program.

3.6.1 Technical Representative

The certified installation pest management coordinator shall be the technical representative, and shall be present at all meetings concerning treatment measures for pest or disease control. They may be present during treatment application.

3.6.2 Application

A state certified applicator shall apply required pesticides in accordance with EPA label restrictions and recommendations. Clothing and personal protective equipment shall be used as specified on the pesticide label. A closed system is recommended as it prevents the pesticide from coming into contact with the applicator or other persons. Water for formulating shall only come from designated locations. Filling hoses shall be fitted with a backflow preventer meeting local plumbing codes or standards. Overflow shall be prevented during the filling operation. Prior to each day of use, the equipment used for applying pesticide shall be inspected for leaks, clogging, wear, or damage. Any repairs are to be performed immediately.

3.7 RESTORATION AND CLEAN UP

3.7.1 Restoration

Existing turf areas, pavements, and facilities that have been damaged from the sodding operation shall be restored to original condition at Contractor's expense.

3.7.2 Clean Up

Excess and waste material shall be removed from the sodded areas and shall be disposed offsite. Adjacent paved areas shall be cleaned.

3.8 PROTECTION OF INSTALLED AREAS

Immediately upon completion of the sodding operation in an area, the area shall be protected against traffic or other use by erecting barricades and providing signage as required, or as directed.

3.9 SOD ESTABLISHMENT PERIOD

3.9.1 Commencement

The sod establishment period to obtain a healthy stand of grass plants shall begin on the first day of work under this contract and shall end 3 months after the last day of sodding operation. Written calendar time period shall be furnished for the sod establishment period. When there is more than 1 sod establishment period, the boundaries of the sodded area

covered for each period shall be described. The sod establishment period shall be modified for inclement weather, shut down periods, or for separate completion dates of areas.

3.9.2 Satisfactory Stand of Grass Plants

Grass plants shall be evaluated for species and health. A satisfactory stand of grass plants from the sodding operation shall be living sod uniform in color and leaf texture. Bare spots shall be a maximum 2 inch square. Joints between sod pieces shall be tight and free from weeds and other undesirable growth.

3.9.3 Maintenance During Establishment Period

Maintenance of the sodded areas shall include eradicating weeds, insects and diseases; protecting embankments and ditches from surface erosion; maintaining erosion control materials and mulch; protecting installed areas from traffic; mowing; watering; and post-fertilization.

3.9.3.1 Mowing

Sodded areas shall be mowed to a minimum 3 inch height when the turf is a maximum 4 inch height. Clippings shall be removed when the amount cut prevents sunlight from reaching the ground surface.

3.9.3.2 Post-Fertilization

The fertilizer shall be applied as recommended by the soil test. A maximum 1/2 pound per 1000 square feet of actual available nitrogen shall be provided to the grass plants. The application shall be timed prior to the advent of winter dormancy and shall be made without burning the installed grass plants.

3.9.3.3 Pesticide Treatment

Treatment for disease or pest shall be in accordance with paragraph APPLICATION OF PESTICIDE.

3.9.3.4 Repair

Unsatisfactory stand of grass plants shall be repaired or reinstalled, and eroded areas shall be repaired in accordance with paragraph SITE PREPARATION.

3.9.3.5 Maintenance Record

A record of each site visit shall be furnished which describes the maintenance work performed; areas repaired or reinstalled; and diagnosis for unsatisfactory stand of grass plants.

-- End of Section --

SECTION 03100

STRUCTURAL CONCRETE FORMWORK
05/98

PART 1 GENERAL

1.1 REFERENCES

The publications listed below form a part of this specification to the extent referenced. The publications are referred to in the text by basic designation only.

ACI INTERNATIONAL (ACI)

ACI 347R	(1994) Guide to Formwork for Concrete

AMERICAN HARDBOARD ASSOCIATION (AHA)

AHA A135.4	(1995) Basic Hardboard

U.S. DEPARTMENT OF COMMERCE (DOC)

DOC PS 1	(1996) Voluntary Product Standard - Construction and Industrial Plywood

1.2 SUBMITTALS

Government approval is required for submittals with a "G" designation; submittals not having a "G" designation are for information only. When used, a designation following the "G" designation identifies the office that will review the submittal for the Government. The following shall be submitted in accordance with Section 01330 SUBMITTAL PROCEDURES:

SD-02 Shop Drawings

Formwork

Drawings showing details of formwork, including dimensions of fiber voids, joints, supports, studding and shoring, and sequence of form and shoring removal.

SD-03 Product Data

Design

Design analysis and calculations for form design and methodology used in the design.

Form Materials

Manufacturer's data including literature describing form materials, accessories, and form releasing agents.

Form Releasing Agents;

Manufacturer's recommendation on method and rate of application of form releasing agents.

1.3 DESIGN

Formwork shall be designed in accordance with methodology of ACI 347R for anticipated loads, lateral pressures, and stresses. Forms shall be capable of producing a surface which meets the requirements of the class of finish specified in Section 03300 CAST-IN-PLACE STRUCTURAL CONCRETE. Forms shall be capable of withstanding the pressures resulting from placement and vibration of concrete.

Contractor shall be responsible for structural adequacy, design, engineering and construction of formwork.

PART 2 PRODUCTS

2.1 FORM MATERIALS

2.1.1 Forms For Class A and Class B Finish

Forms for Class A and Class B finished surfaces shall be plywood panels conforming to DOC PS 1, Grade B-B concrete form panels, Class I or II. Other form materials or liners may be used provided the smoothness and appearance of concrete produced will be equivalent to that produced by the plywood concrete form panels. Forms for round columns shall be the prefabricated steel type.

2.1.2 Forms For Class C Finish

Forms for Class C finished surfaces shall be shiplap lumber; plywood conforming to DOC PS 1, Grade B-B concrete form panels, Class I or II; tempered concrete form hardboard conforming to AHA A135.4; other approved concrete form material; or steel, except that steel lining on wood sheathing shall not be used.

2.1.3 Forms For Class D Finish

Forms for Class D finished surfaces, except where concrete is placed against earth, shall be wood or steel or other approved concrete form material.

2.1.4 Form Ties

Form ties shall be factory-fabricated metal ties, shall be of the removable or internal disconnecting or snap-off type, and shall be of a design that will not permit form deflection and will not spall concrete upon removal. Solid backing shall be provided for each tie. Except where removable tie rods are used, ties shall not leave holes in the concrete surface less than 1/4 inch nor more than 1 inch deep and not more than 1 inchin diameter. Removable tie rods shall be not more than 1-1/2 inches in diameter.

2.1.5 Form Releasing Agents

Form releasing agents shall be commercial formulations that will not bond with, stain or adversely affect concrete surfaces. Agents shall not impair subsequent treatment of concrete surfaces depending upon bond or adhesion

nor impede the wetting of surfaces to be cured with water or curing compounds.

PART 3 EXECUTION

3.1 INSTALLATION

3.1.1 Formwork

Forms shall be mortar tight, properly aligned and adequately supported to produce concrete surfaces meeting the surface requirements specified in Section 03300 CAST-IN-PLACE STRUCTURAL CONCRETE and conforming to construction tolerance given in TABLE 1. Where concrete surfaces are to have a Class A or Class B finish, joints in form panels shall be arranged as approved. Where forms for continuous surfaces are placed in successive units, the forms shall fit over the completed surface to obtain accurate alignment of the surface and to prevent leakage of mortar. Forms shall not be reused if there is any evidence of surface wear and tear or defects which would impair the quality of the surface. Surfaces of forms to be reused shall be cleaned of mortar from previous concreting and of all other foreign material before reuse. Form ties that are to be completely withdrawn shall be coated with a nonstaining bond breaker.

3.2 CHAMFERING

Except as otherwise shown, external corners that will be exposed shall be chamfered, beveled, or rounded by moldings placed in the forms.

3.3 COATING

Forms for Class A and Class B finished surfaces shall be coated with a form releasing agent before the form or reinforcement is placed in final position. The coating shall be used as recommended in the manufacturer's printed or written instructions. Forms for Class C and D finished surfaces may be wet with water in lieu of coating immediately before placing concrete, except that in cold weather with probable freezing temperatures, coating shall be mandatory. Surplus coating on form surfaces and coating on reinforcing steel and construction joints shall be removed before placing concrete.

3.4 REMOVAL OF FORMS

Forms shall be removed preventing injury to the concrete and ensuring the complete safety of the structure. Formwork for columns, walls, side of beams and other parts not supporting the weight of concrete may be removed when the concrete has attained sufficient strength to resist damage from the removal operation but not before at least 24 hours has elapsed since concrete placement. Supporting forms and shores shall not be removed from beams, floors and walls until the structural units are strong enough to carry their own weight and any other construction or natural loads. Supporting forms or shores shall not be removed before the concrete strength has reached 70 percent of design strength, as determined by field cured cylinders or other approved methods. This strength shall be demonstrated by job-cured test specimens, and by a structural analysis considering the proposed loads in relation to these test strengths and the strength of forming and shoring system. The job-cured test specimens for form removal purposes shall be provided in numbers as directed and shall be in addition to those required for concrete quality control. The specimens shall be removed from molds at the age of 24 hours and shall receive,

insofar as possible, the same curing and protection as the structures they represent.

TABLE 1

TOLERANCES FOR FORMED SURFACES

1.	Variations from the plumb:	In any 10 feet of length ---------- 1/4 inch
	a. In the lines and surfaces of columns, piers, walls and in arises	Maximum for entire length ---------- 1 inch
	b. For exposed corner columns,control-joint grooves, and other conspicuous lines	In any 20 feet of length ---------- ---- 1/4 inch Maximum for entire length---------- 1/2 inch
2.	Variation from the level or from the grades indicated on the drawings:	In any 10 feet of length ----------1/4 inch In any bay or in any 20 feet of length---------- 3/8 inch
	a. In slab soffits, ceilings, beam soffits, and in arises, measured before removal of supporting shores	Maximum for entire length ---------- 3/4 inch
	b. In exposed lintels, sills, parapets, horizontal grooves, and other conspicuous lines	In any bay or in any 20 feet of length ---------- ----- 1/4 inch Maximum for entire length---------- 1/2 inch
3.	Variation of the linear building lines from established position in plan	In any 20 feet --------- 1/2 inch Maximum ----------1 inch
4.	Variation of distance between walls, columns, partitions	1/4 inch per 10 feet of distance, but not more than 1/2 inch in any one bay,and not more than 1 inch total variation
5.	Variation in the sizes and locations of sleeves, floor openings, and wall opening	Minus ---------- 1/4 inch Plus ---------- 1/2 inch
6.	Variation in cross-sectional dimensions of columns and beams and in the thickness of slabs and walls	Minus ---------- 1/4 inch Plus ---------- 1/2 inch

TABLE 1

TOLERANCES FOR FORMED SURFACES

7. Footings:		
a.	Variation of dimensions in plan	Minus ---------- 1/2 inch Plus ---------- 2 inches when formed or plus 3 inches when placed against unformed excavation
b.	Misplacement of eccentricity	2 percent of the footing width in the direction of misplacement but not more than 2 inches
c.	Reduction in thickness of specified thickness	Minus ---------- 5 percent
8.	Variation in steps:	Riser ---------- 1/8 inch
a.	In a flight of stairs	Tread ---------- 1/4 inch
b.	In consecutive steps	Riser ---------- 1/16 inch Tread ---------- 1/8 inch

-- End of Section --

SECTION 03150

EXPANSION JOINTS, CONTRACTION JOINTS, AND WATERSTOPS
05/98

PART 1 GENERAL

1.1 REFERENCES

The publications listed below form a part of this specification to the extent referenced. The publications are referred to in the text by basic designation only.

AMERICAN SOCIETY FOR TESTING AND MATERIALS (ASTM)

ASTM C 919	(1984; R 1998) Use of Sealants in Acoustical Applications
ASTM D 412	(1998a) Vulcanized Rubber and Thermoplastic Rubbers and Thermoplastic Elastomers - Tension
ASTM D 1190	(1997) Concrete Joint Sealer, Hot-Applied Elastic Type
ASTM D 1191	(1984; R 1994el) Concrete Joint Sealers
ASTM D 1751	(1999) Preformed Expansion Joint Filler for Concrete Paving and Structural Construction (Nonextruding and Resilient Bituminous Types)
ASTM D 5249	(1995) Backer Material for Use With Cold and Hot-Applied Joint Sealants in Portland-Cement Concrete and Asphalt Joints

U.S. ARMY CORPS OF ENGINEERS (USACE)

USACE CRD-C 572	(1974) Corps of Engineers Specifications for Polyvinylchloride Waterstop

1.2 SUBMITTALS

Government approval is required for submittals with a "G" designation; submittals not having a "G" designation are for information only. When used, a designation following the "G" designation identifies the office that will review the submittal for the Government. The following shall be submitted in accordance with Section 01330 SUBMITTAL PROCEDURES:

SD-02 Shop Drawings

Waterstops

Shop drawings and fabrication drawings provided by the manufacturer or prepared by the Contractor.

SD-03 Product Data

Preformed Expansion Joint Filler
Sealant
Waterstops

Manufacturer's literature, including safety data sheets, for preformed fillers and the lubricants used in their installation; field-molded sealants and primers (when required by sealant manufacturer); preformed compression seals; and waterstops.

Manufacturer's recommended instructions for installing preformed fillers, field-molded sealants; preformed compression seals; and waterstops; and for splicing non-metallic waterstops.

SD-07 Certificates

Preformed Expansion Joint Filler
Sealant
Waterstops

Certificates of compliance stating that the joint filler and sealant materials and waterstops conform to the requirements specified.

1.3 DELIVERY AND STORAGE

Material delivered and placed in storage shall be stored off the ground and protected from moisture, dirt, and other contaminants. Sealants shall be delivered in the manufacturer's original unopened containers. Sealants whose shelf life has expired shall be removed from the site.

PART 2 PRODUCTS

2.1 CONTRACTION JOINT STRIPS

Contraction joints shall be sawed.

2.2 PREFORMED EXPANSION JOINT FILLER

Expansion joint filler shall be preformed material conforming to ASTM D 1751. Unless otherwise indicated, filler material shall be 3/8 inch thick and of a width applicable for the joint formed. Backer material, when required, shall conform to ASTM D 5249.

2.3 SEALANT

Joint sealant shall conform to the following:

2.3.1 Hot-Poured Type

ASTM D 1190 tested in accordance with ASTM D 1191.

2.4 WATERSTOPS

Intersection and change of direction waterstops shall be shop fabricated.

2.4.1 Non-Metallic Materials`

Non-metallic waterstops shall be manufactured from a prime virgin resin; reclaimed material is not acceptable. The compound shall contain plasticizers, stabilizers, and other additives to meet specified requirements. Polyvinylchloride waterstops shall conform to USACE CRD-C 572.

2.4.2 Non-Metallic Hydrophilic

Swellable strip type compound of polymer modified chloroprene rubber that swells upon contact with water shall conform to ASTM D 412 as follows: Tensile strength 420 psi minimum; ultimate elongation 600 percent minimum. Hardness shall be 50 minimum on the type A durometer and the volumetric expansion ratio in distilled water at 70 degrees F shall be 3 to 1 minimum.

PART 3 EXECUTION

3.1 JOINTS

Joints shall be installed at locations indicated and as authorized.

3.1.1 Contraction Joints

Contraction joints shall be constructed by cutting the concrete with a saw after concrete has set. Joints shall be approximately 1/8 inch wide and shall extend into the slab one-fourth the slab thickness, minimum, but not less than 1 inch.

3.1.1.1 Sawed Joints

Joint sawing shall be early enough to prevent uncontrolled cracking in the slab, but late enough that this can be accomplished without appreciable spalling. Concrete sawing machines shall be adequate in number and power, and with sufficient replacement blades to complete the sawing at the required rate. Joints shall be cut to true alignment and shall be cut in sequence of concrete placement. Sludge and cutting debris shall be removed.

3.1.2 Expansion Joints

Preformed expansion joint filler shall be used in expansion and isolation joints in slabs around columns and between slabs on grade and vertical surfaces where indicated. The filler shall extend the full slab depth, unless otherwise indicated. The edges of the joint shall be neatly finished with an edging tool of 1/8 inch radius, except where a resilient floor surface will be applied. Where the joint is to receive a sealant, the filler strips shall be installed at the proper level below the finished floor with a slightly tapered, dressed and oiled wood strip temporarily secured to the top to form a recess to the size shown on the drawings. The wood strip shall be removed after the concrete has set. Contractor may opt to use a removable expansion filler cap designed and fabricated for this purpose in lieu of the wood strip. The groove shall be thoroughly cleaned of laitance, curing compound, foreign materials, protrusions of hardened concrete, and any dust which shall be blown out of the groove with oil-free compressed air.

3.1.3 Joint Sealant

Sawed contraction joints and expansion joints in slabs shall be filled with joint sealant, unless otherwise shown. Joint surfaces shall be clean, dry, and free of oil or other foreign material which would adversely affect the

bond between sealant and concrete. Joint sealant shall be applied as recommended by the manufacturer of the sealant.

3.1.3.1 Joints With Field-Molded Sealant

Joints shall not be sealed when the sealant material, ambient air, or concrete temperature is less than 40 degrees F. When the sealants are meant to reduce the sound transmission characteristics of interior walls, ceilings, and floors the guidance provided in ASTM C 919 shall be followed. Joints requiring a bond breaker shall be coated with curing compound or with bituminous paint. Bond breaker and back-up material shall be installed where required. Joints shall be primed and filled flush with joint sealant in accordance with the manufacturer's recommendations.

3.2 WATERSTOPS, INSTALLATION AND SPLICES

Waterstops shall be installed at the locations shown to form a continuous water-tight diaphragm. Adequate provision shall be made to support and completely protect the waterstops during the progress of the work. Any waterstop punctured or damaged shall be repaired or replaced. Exposed waterstops shall be protected during application of form release agents to avoid being coated. Suitable guards shall be provided to protect exposed projecting edges and ends of partially embedded waterstops from damage when concrete placement has been discontinued. Splices shall be made by certified trained personnel using approved equipment and procedures.

3.2.1 Non-Metallic

Fittings shall be shop made using a machine specifically designed to mechanically weld the waterstop. A miter guide, proper fixturing (profile dependant), and portable power saw shall be used to miter cut the ends to be joined to ensure good alignment and contact between joined surfaces. The splicing of straight lengths shall be done by squaring the ends to be joined. Continuity of the characteristic features of the cross section of the waterstop (ribs, tabular center axis, protrusions, etc.) shall be maintained across the splice.

3.2.1.1 Polyvinyl Chloride Waterstop

Splices shall be made by heat sealing the adjacent waterstop edges together using a thermoplastic splicing iron utilizing a non-stick surface specifically designed for waterstop welding. The correct temperature shall be used to sufficiently melt without charring the plastic. The spliced area, when cooled, shall show no signs of separation, holes, or other imperfections when bent by hand in as sharp an angle as possible.

3.2.1.2 Quality Assurance

Edge welding will not be permitted. Centerbulbs shall be compressed or closed when welding to non-centerbulb type. Waterstop splicing defects which are unacceptable include, but are not limited to the following: 1) Tensile strength less than 80 percent of parent section. 2) Free lap joints. 3) Misalignment of centerbulb, ribs, and end bulbs greater than 1/16 inch. 4) Misalignment which reduces waterstop cross section more than 15 percent. 5) Bond failure at joint deeper than 1/16 inch or 15 percent of material thickness. 6) Misalignment of waterstop splice resulting in misalignment of waterstop in excess of 1/2 inch in 10 feet. 7) Visible porosity in the weld area, including pin holes. 8) Charred or burnt material. 9) Bubbles or inadequate bonding. 10) Visible signs of splice

separation when cooled splice is bent by hand at a sharp angle.

3.3 CONSTRUCTION JOINTS

Construction joints are specified in Section 03300 CAST-IN-PLACE STRUCTURAL CONCRETE except that construction joints coinciding with expansion and contraction joints shall be treated as expansion or contraction joints as applicable.

-- End of Section --

SECTION 03200

CONCRETE REINFORCEMENT
09/97

PART 1 GENERAL

1.1 REFERENCES

The publications listed below form a part of this specification to the extent referenced. The publications are referred to in the text by basic designation only.

ACI INTERNATIONAL (ACI)

ACI 318/318R	(1995) Building Code Requirements for Structural Concrete and Commentary

AMERICAN SOCIETY FOR TESTING AND MATERIALS (ASTM)

ASTM A 82	(1997a) Steel Wire, Plain, for Concrete Reinforcement
ASTM A 184/A 184M	(1996) Fabricated Deformed Steel Bar Mats for Concrete Reinforcement
ASTM A 185	(1997) Steel Welded Wire Fabric, Plain, for Concrete Reinforcement
ASTM A 496	(1997) Steel Wire, Deformed, for Concrete Reinforcement
ASTM A 497	(1997) Steel Welded Wire Fabric, Deformed, for Concrete Reinforcement
ASTM A 615/A 615M	(1996a) Deformed and Plain Billet-Steel Bars for Concrete Reinforcement

CONCRETE REINFORCING STEEL INSTITUTE (CRSI)

CRSI MSP-1	(1996) Manual of Standard Practice

1.2 SUBMITTALS

Government approval is required for submittals with a "G" designation; submittals not having a "G" designation are for information only. When used, a designation following the "G" designation identifies the office that will review the submittal for the Government. The following shall be submitted in accordance with Section 01330 SUBMITTAL PROCEDURES:

SD-02 Shop Drawings

Reinforcement; G

Detail drawings showing reinforcing steel placement, schedules, sizes, grades, and splicing and bending details. Drawings shall

show support details including types, sizes and spacing.

SD-07 Certificates

Reinforcing Steel; G

Certified copies of mill reports attesting that the reinforcing steel furnished contains no less than 25 percent recycled scrap steel and meets the requirements specified herein, prior to the installation of reinforcing steel.

1.3 DELIVERY AND STORAGE

Reinforcement and accessories shall be stored off the ground on platforms, skids, or other supports.

PART 2 PRODUCTS

2.1 DOWELS

Dowels shall conform to ASTM A 615/A 615M, Grade 60. Bars shall be cut, not sheared. Bars shall be free of burrs or other deformations restricting slippage in concrete.

2.2 FABRICATED BAR MATS

Fabricated bar mats shall conform to ASTM A 184/A 184M.

2.3 REINFORCING STEEL

Reinforcing steel shall be deformed bars conforming to ASTM A 615/A 615M, grades and sizes as indicated. Cold drawn wire used for spiral reinforcement shall conform to ASTM A 82.

2.4 WELDED WIRE FABRIC

Welded wire fabric shall conform to ASTM A 185, ASTM A 496, ASTM A 497, and shall be furnished in flat sheets only.

2.5 WIRE TIES

Wire ties shall be 16 gauge or heavier black annealed steel wire.

2.6 SUPPORTS

Bar supports for formed surfaces shall be designed and fabricated in accordance with CRSI MSP-1 and shall be steel or precast concrete blocks. Precast concrete blocks shall have wire ties and shall be not less than 4 inches square when supporting reinforcement on ground. Precast concrete block shall have compressive strength equal to that of the surrounding concrete. Where concrete formed surfaces will be exposed to weather or where surfaces are to be painted, steel supports within 1/2 inch of concrete surface shall be galvanized, plastic protected or of stainless steel. Precast concrete blocks shall not be used for structural framed slab systems. Concrete supports used in concrete exposed to view shall have the same color and texture as the finish surface. For slabs on grade, supports shall be precast concrete blocks, plastic coated steel fabricated with bearing plates, or specifically designed wire-fabric supports fabricated of plastic.

PART 3 EXECUTION

3.1 REINFORCEMENT

Reinforcement shall be fabricated to shapes and dimensions shown and shall conform to the requirements of ACI 318/318R. Reinforcement shall be cold bent unless otherwise authorized. Bending may be accomplished in the field or at the mill. Bars shall not be bent after embedment in concrete. Safety caps shall be placed on all exposed ends of vertical concrete reinforcement bars that pose a danger to life safety. Wire tie ends shall face away from the forms.

3.1.1 Placement

Reinforcement shall be free from loose rust and scale, dirt, oil, or other deleterious coating that could reduce bond with the concrete. Reinforcement shall be placed in accordance with ACI 318/318R at locations shown plus or minus one bar diameter. Reinforcement shall not be continuous through expansion joints and shall be as indicated through construction or contraction joints. Concrete coverage shall be as indicated or as required by ACI 318/318R. If bars are moved more than one bar diameter to avoid interference with other reinforcement, conduits or embedded items, the resulting arrangement of bars, including additional bars required to meet structural requirements, shall be approved before concrete is placed.

3.1.2 Splicing

Splices of reinforcement shall conform to ACI 318/318R and shall be made only as required or indicated. Splicing shall be by lapping. Lapped bars shall be placed in contact and securely tied or spaced transversely apart to permit the embedment of the entire surface of each bar in concrete. Lapped bars shall not be spaced farther apart than one-fifth the required length of lap or 2 inches.

3.2 WELDED-WIRE FABRIC PLACEMENT

Welded-wire fabric shall be placed in slabs as indicated. Fabric placed in slabs on grade shall be continuous between expansion, construction, and contraction joints. Fabric placement at joints shall be as indicated. Lap splices shall be made in such a way that the overlapped area equals the distance between the outermost crosswires plus 2 inches. Laps shall be staggered to avoid continuous laps in either direction. Fabric shall be wired or clipped together at laps at intervals not to exceed 4 feet. Fabric shall be positioned by the use of supports.

3.3 DOWEL INSTALLATION

Dowels shall be installed in slabs on grade at locations indicated and at right angles to joint being doweled. Dowels shall be accurately positioned and aligned parallel to the finished concrete surface before concrete placement. Dowels shall be rigidly supported during concrete placement. One end of dowels shall be coated with a bond breaker.

-- End of Section --

SECTION 03300

CAST-IN-PLACE STRUCTURAL CONCRETE
11/01

PART 1 GENERAL

1.1 REFERENCES

The publications listed below form a part of this specification to the extent referenced. The publications are referred to in the text by basic designation only.

ACI INTERNATIONAL (ACI)

ACI 117/117R	(1990; Errata) Standard Tolerances for Concrete Construction and Materials
ACI 211.1	(1991) Standard Practice for Selecting Proportions for Normal, Heavyweight, and Mass Concrete
ACI 214.3R	(1988; R 1997) Simplified Version of the Recommended Practice for Evaluation of Strength Test Results of Concrete
ACI 303R	(1991) Guide to Cast-In-Place Architectural Concrete Practice
ACI 305R	(1999) Hot Weather Concreting
ACI 318/318R	(1999) Building Code Requirements for Structural Concrete and Commentary

AMERICAN ASSOCIATION OF STATE HIGHWAY AND TRANSPORTATION OFFICIALS (AASHTO)

AASHTO M 182	(1991; R 1996) Burlap Cloth Made from Jute or Kenaf

AMERICAN SOCIETY FOR TESTING AND MATERIALS (ASTM)

ASTM C 1017/C 1017M	(1998) Chemical Admixtures for Use in Producing Flowing Concrete
ASTM C 1059	(1999) Latex Agents for Bonding Fresh to Hardened Concrete
ASTM C 1064/C 1064M	(1999) Temperature of Freshly Mixed Portland Cement Concrete
ASTM C 1077	(1998) Laboratories Testing Concrete and Concrete Aggregates for Use in Construction and Criteria for Laboratory Evaluation
ASTM C 1107	(1999) Packaged Dry, Hydraulic-Cement

	Grout(Nonshrink)
ASTM C 136	(1996a) Sieve Analysis of Fine and Coarse Aggregates
ASTM C 143/C 143M	(2000) Slump of Hydraulic Cement Concrete
ASTM C 150	(1999a) Portland Cement
ASTM C 172	(1999) Sampling Freshly Mixed Concrete
ASTM C 173	(1994ael) Air Content of Freshly Mixed Concrete by the Volumetric Method
ASTM C 192/C 192M	(2000) Making and Curing Concrete Test Specimens in the Laboratory
ASTM C 231	(1997el) Air Content of Freshly Mixed Concrete by the Pressure Method
ASTM C 260	(2000) Air-Entraining Admixtures for Concrete
ASTM C 309	(1998a) Liquid Membrane-Forming Compounds for Curing Concrete
ASTM C 31/C 31M	(2000e1) Making and Curing Concrete Test Specimens in the Field
ASTM C 33	(1999ae1) Concrete Aggregates
ASTM C 39/C 39M	(2001) Compressive Strength of Cylindrical Concrete Specimens
ASTM C 42/C 42M	(1999) Obtaining and Testing Drilled Cores and Sawed Beams of Concrete
ASTM C 494/C 494M	(1999ae1) Chemical Admixtures for Concrete
ASTM C 595	(2000a) Blended Hydraulic Cements
ASTM C 618	(2000) Coal Fly Ash and Raw or Calcined Natural Pozzolan for Use as a Mineral Admixture in Concrete
ASTM C 78	(1994) Flexural Strength of Concrete (Using Simple Beam With Third-Point Loading)
ASTM C 881	(1999) Epoxy-Resin-Base Bonding Systems for Concrete
ASTM C 94/C 94M	(2000e2) Ready-Mixed Concrete
ASTM C 989	(1999) Ground Granulated Blast-Furnace Slag for Use in Concrete and Mortars
ASTM D 1751	(1999) Preformed Expansion Joint Filler for Concrete Paving and Structural

	Construction (Nonextruding and Resilient Bituminous Types)
ASTM D 75	(1987; R 1997) Sampling Aggregates
ASTM E 96	(2000) Water Vapor Transmission of Materials

NATIONAL INSTITUTE OF STANDARDS AND TECHNOLOGY (NIST)

NIST HB 44	(1997) NIST Handbook 44: Specifications, Tolerances, and other Technical Requirements for Weighing and Measuring Devices

NATIONAL READY-MIXED CONCRETE ASSOCIATION (NRMCA)

NRMCA CPMB 100	(1996) Concrete Plant Standards \n/c\X
NRMCA QC 3	(1984) Quality Control Manual: Section 3, Plant Certifications Checklist: Certification of Ready Mixed Concrete Production Facilities
NRMCA TMMB 100	(1994) Truck Mixer Agitator and Front Discharge Concrete Carrier Standards

U.S. ARMY CORPS OF ENGINEERS (USACE)

COE CRD-C 104	(1980) Method of Calculation of the Fineness Modulus of Aggregate
COE CRD-C 400	(1963) Requirements for Water for Use in Mixing or Curing Concrete
COE CRD-C 521	(1981) Standard Test Method for Frequency and Amplitude of Vibrators for Concrete

1.2 UNIT PRICE CONTRACT

1.3 LUMP SUM CONTRACT

Under this type of contract concrete items will be paid for by lump sum and will not be measured. The work covered by these items consists of furnishing all concrete materials, reinforcement, miscellaneous embedded materials, and equipment, and performing all labor for the forming, manufacture, transporting, placing, finishing, curing, and protection of concrete in these structures.

1.4 SUBMITTALS

Government approval is required for submittals with a "G" designation; submittals not having a "G" designation are for information only. When used, a designation following the "G" designation identifies the office that will review the submittal for the Government. The following shall be submitted in accordance with Section 01330 SUBMITTAL PROCEDURES:

SD-03 Product Data

Mixture Proportions; G

The results of trial mixture design studies along with a statement giving the maximum nominal coarse aggregate size and the proportions of ingredients that will be used in the manufacture of each strength or class of concrete, at least 14 days prior to commencing concrete placing operations. Aggregate weights shall be based on the saturated surface dry condition. The statement shall be accompanied by test results from an approved independent commercial testing laboratory, showing that mixture design studies have been made with materials proposed for the project and that the proportions selected will produce concrete of the qualities indicated. No substitutions shall be made in the materials used in the mixture design studies without additional tests to show that the quality of the concrete is satisfactory.

SD-06 Test Reports

Testing and Inspection for Contractor Quality Control; G

Certified copies of laboratory test reports, including mill tests and all other test data, for portland cement, blended cement, pozzolan, ground granulated blast furnace slag, aggregate, admixtures, and curing compound proposed for use on this project. All concrete test reports shall be sent directly to the Contracting Officer within 24 hours of its completion.

SD-07 Certificates

Qualifications

Written documentation for Contractor Quality Control personnel.

1.5 QUALIFICATIONS

Contractor Quality Control personnel assigned to concrete construction shall be American Concrete Institute (ACI) Certified Workmen in one of the following grades or shall have written evidence of having completed similar qualification programs:

Concrete Field Testing Technician, Grade I
Concrete Laboratory Testing Technician, Grade I or II
Concrete Construction Inspector, Level II

Concrete Transportation Construction Inspector or
Reinforced Concrete Special Inspector, Jointly certified by American Concrete Institute (ACI), Building Official and Code Administrators International (BOCA), International Conference of Building Officials (ICBO), and Southern Building Code Congress International (SBCCI).

The foreman or lead journeyman of the flatwork finishing crew shall have similar qualification for ACI Concrete Flatwork Technician/Finisher or equal, with written documentation.

1.6 GENERAL REQUIREMENTS

1.6.1 Tolerances

Except as otherwise specified herein, tolerances for concrete batching, mixture properties, and construction as well as definition of terms and application practices shall be in accordance with ACI 117/117R. Level and grade tolerance measurements of slabs shall be made as soon as possible after finishing; when forms or shoring are used, the measurements shall be made prior to removal.

1.6.1.1 Floors

For the purpose of this Section the following terminology correlation between ACI 117/117R and this Section shall apply:

Floor Profile Quality Classification From ACI 117/117R	This Section
Conventional Bullfloated	Same
Conventional Straightedged	Same
Flat	Float Finish or Trowel Finish
Very Flat	Same. Use only with F-system

Levelness tolerance shall not apply where design requires floors to be sloped to drains or sloped for other reasons.

1.6.1.2 Floors by the Straightedge System

The flatness of the floors shall be carefully controlled and the tolerances shall be measured by the straightedge system as specified in paragraph 4.5.7 of ACI 117/117R, using a 10 foot straightedge, within 72 hours after floor slab installation and before shores and/or forms are removed. The listed tolerances shall be met at any and every location at which the straightedge can be placed.

Bullfloated	3/8-inch in 10 feet
Straightedged	3/8-inch in 10 feet
Float Finish	1/4-inch in 10 feet
Trowel Finish	1/4-inch in 10 feet

1.6.2 Strength Requirements and w/c Ratio

1.6.2.1 Strength Requirements

Specified compressive strength (f'c) shall be as follows:

COMPRESSIVE STRENGTH	STRUCTURE OR PORTION OF STRUCTURE
4000 psi at 28 days	

Concrete made with high-early strength cement shall have a 7-day strength equal to the specified 28-day strength for concrete made with Type I or II portland cement. Compressive strength shall be determined in accordance with ASTM C 39/C 39M.

a. Evaluation of Concrete Compressive Strength. Compressive strength specimens (6 by 12 inch cylinders) shall be fabricated by the Contractor and laboratory cured in accordance with ASTM C 31/C 31M and tested in accordance with ASTM C 39/C 39M. The strength of the concrete will be considered satisfactory so long as the

average of all sets of three consecutive test results equals or exceeds the specified compressive strength f'c and no individual test result falls below the specified strength f'c by more than 500 psi. A "test" is defined as the average of two companion cylinders, or if only one cylinder is tested, the results of the single cylinder test. Additional analysis or testing, including taking cores and/or load tests may be required at the Contractor's expense when the strength of the concrete in the structure is considered potentially deficient.

b. Investigation of Low-Strength Compressive Test Results. When any strength test of standard-cured test cylinders falls below the specified strength requirement by more than 500 psi or if tests of field-cured cylinders indicate deficiencies in protection and curing, steps shall be taken to assure that the load-carrying capacity of the structure is not jeopardized. When the strength of concrete in place is considered potentially deficient, cores shall be obtained and tested in accordance with ASTM C 42/C 42M. At least three representative cores shall be taken from each member or area of concrete in place that is considered potentially deficient. The location of cores will be determined by the Contracting Officer to least impair the strength of the structure. Concrete in the area represented by the core testing will be considered adequate if the average strength of the cores is equal to at least 85 percent of the specified strength requirement and if no single core is less than 75 percent of the specified strength requirement. Non-destructive tests (tests other than test cylinders or cores) shall not be used as a basis for acceptance or rejection. The Contractor shall perform the coring and repair the holes. Cores will be tested by the Government.

c. Load Tests. If the core tests are inconclusive or impractical to obtain or if structural analysis does not confirm the safety of the structure, load tests may be directed by the Contracting Officer in accordance with the requirements of ACI 318/318R. Concrete work evaluated by structural analysis or by results of a load test as being understrength shall be corrected in a manner satisfactory to the Contracting Officer. All investigations, testing, load tests, and correction of deficiencies shall be performed by and at the expense of the Contractor and must be approved by the Contracting Officer, except that if all concrete is found to be in compliance with the drawings and specifications, the cost of investigations, testing, and load tests will be at the expense of the Government.

1.6.2.2 Water-Cement Ratio

Maximum water-cement ratio (w/c) for normal weight concrete shall be as follows:

WATER-CEMENT RATIO, BY WEIGHT
0.45

These w/c's may cause higher strengths than that required above for compressive or flexural strength. The maximum w/c required will be the equivalent w/c as determined by conversion from the weight ratio of water to cement plus pozzolan, and ground granulated blast furnace slag (GGBF slag) by the weight equivalency method as described in ACI 211.1. In the

case where GGBF slag is used, the weight of the GGBF slag shall be included in the equations of ACI 211.1 for the term P which is used to denote the weight of pozzolan.

1.6.3 Air Entrainment

Except as otherwise specified for lightweight concrete, all normal weight concrete shall be air entrained to contain between 4 and 7 percent total air, except that when the nominal maximum size coarse aggregate is 3/4 inch or smaller it shall be between 4.5 and 7.5 percent. concrete for interior building slabs at grade shall not be air entrained. Concrete with specified strength over 5000 psi may have 1.0 percent less air than specified above. Specified air content shall be attained at point of placement into the forms. Air content for normal weight concrete shall be determined in accordance with ASTM C 231.

1.6.4 Slump

Slump of the concrete, as delivered to the point of placement into the forms, shall be within the following limits. Slump shall be determined in accordance with ASTM C 143/C 143M.

Structural Element	Slump Minimum	Slump Maximum
Walls, columns and beams	2 in.	4 in.
Foundation walls, substructure walls, footings, slabs	1 in.	3 in.
Any structural concrete approved for placement by pumping:		
At pump	2 in.	6 in.
At discharge of line	1 in.	4 in.

When use of a plasticizing admixture conforming to ASTM C 1017/C 1017M or when a Type F or G high range water reducing admixture conforming to ASTM C 494/C 494M is permitted to increase the slump of concrete, concrete shall have a slump of 2 to 4 inches before the admixture is added and a maximum slump of 8 inches at the point of delivery after the admixture is added.

1.6.5 Concrete Temperature

The temperature of the concrete as delivered shall not exceed 90 degrees F. When the ambient temperature during placing is 40 degrees F or less, or is expected to be at any time within 6 hours after placing, the temperature of the concrete as delivered shall be between 55 and 75 degrees F.

1.6.6 Size of Coarse Aggregate

The largest feasible nominal maximum size aggregate (NMSA) specified in paragraph AGGREGATES shall be used in each placement. However, nominal maximum size of aggregate shall not exceed any of the following: three-fourths of the minimum cover for reinforcing bars, three-fourths of the minimum clear spacing between reinforcing bars, one-fifth of the narrowest dimension between sides of forms, or one-third of the thickness of slabs or toppings.

1.6.7 Special Properties and Products

Concrete may contain admixtures other than air entraining agents, such as water reducers, superplasticizers, or set retarding agents to provide special properties to the concrete, if specified or approved. Any of these materials to be used on the project shall be used in the mix design studies.

1.7 MIXTURE PROPORTIONS

Concrete shall be composed of portland cement, other cementitious and pozzolanic materials as specified, aggregates, water and admixtures as specified.

1.7.1 Proportioning Studies for Normal Weight Concrete

Trial design batches, mixture proportioning studies, and testing requirements for various classes and types of concrete specified shall be the responsibility of the Contractor. Mixture proportions shall be based on compressive strength as determined by test specimens fabricated in accordance with ASTM C 192/C 192M and tested in accordance with ASTM C 39/C 39M. Samples of all materials used in mixture proportioning studies shall be representative of those proposed for use in the project and shall be accompanied by the manufacturer's or producer's test reports indicating compliance with these specifications. Trial mixtures having proportions, consistencies, and air content suitable for the work shall be made based on methodology described in ACI 211.1, using at least three different water-cement ratios for each type of mixture, which will produce a range of strength encompassing those required for each class and type of concrete required on the project. The maximum water-cement ratios required in subparagraph Water-Cement Ratio will be the equivalent water-cement ratio as determined by conversion from the weight ratio of water to cement plus pozzolan, and ground granulated blast furnace slag (GGBF slag) by the weight equivalency method as described in ACI 211.1. In the case where GGBF slag is used, the weight of the GGBF slag shall be included in the equations in ACI 211.1 for the term P, which is used to denote the weight of pozzolan. If pozzolan is used in the concrete mixture, the minimum pozzolan content shall be 15 percent by weight of the total cementitious material, and the maximum shall be 35 percent. Laboratory trial mixtures shall be designed for maximum permitted slump and air content. Separate sets of trial mixture studies shall be made for each combination of cementitious materials and each combination of admixtures proposed for use. No combination of either shall be used until proven by such studies, except that, if approved in writing and otherwise permitted by these specifications, an accelerator or a retarder may be used without separate trial mixture study. Separate trial mixture studies shall also be made for concrete for any conveying or placing method proposed which requires special properties and for concrete to be placed in unusually difficult placing locations. The temperature of concrete in each trial batch shall be reported. For each water-cement ratio, at least three test cylinders for each test age shall be made and cured in accordance withASTM C 192/C 192M. They shall be tested at 7 and 28 days in accordance with ASTM C 39/C 39M. From these test results, a curve shall be plotted showing the relationship between water-cement ratio and strength for each set of trial mix studies. In addition, a curve shall be plotted showing the relationship between 7 day and 28 day strengths. Each mixture shall be designed to promote easy and suitable concrete placement, consolidation and finishing, and to prevent segregation and excessive bleeding.

1.7.2 Average Compressive Strength Required for Mixtures

The mixture proportions selected during mixture design studies shall produce a required average compressive strength (f'cr) exceeding the specified compressive strength (f'c) by the amount indicated below. This required average compressive strength, f'cr, will not be a required acceptance criteria during concrete production. However, whenever the daily average compressive strength at 28 days drops below f'cr during concrete production, or daily average 7-day strength drops below a strength correlated with the 28-day f'cr, the mixture shall be adjusted, as approved, to bring the daily average back up to f'cr. During production, the required f'cr shall be adjusted, as appropriate, based on the standard deviation being attained on the job.

1.7.2.1 Computations from Test Records

Where a concrete production facility has test records, a standard deviation shall be established in accordance with the applicable provisions of ACI 214.3R. Test records from which a standard deviation is calculated shall represent materials, quality control procedures, and conditions similar to those expected; shall represent concrete produced to meet a specified strength or strengths (f'c) within 1,000 psi of that specified for proposed work; and shall consist of at least 30 consecutive tests. A strength test shall be the average of the strengths of two cylinders made from the same sample of concrete and tested at 28 days. Required average compressive strength f'cr used as the basis for selection of concrete proportions shall be the larger of the equations that follow using the standard deviation as determined above:

f'cr = f'c + 1.34S where units are in psi

f'cr = f'c + 2.33S - 500 where units are in psi

Where S = standard deviation

Where a concrete production facility does not have test records meeting the requirements above but does have a record based on 15 to 29 consecutive tests, a standard deviation shall be established as the product of the calculated standard deviation and a modification factor from the following table:

NUMBER OF TESTS	MODIFICATION FACTOR FOR STANDARD DEVIATION
15	1.16
20	1.08
25	1.03
30 or more	1.00

1.7.2.2 Computations without Previous Test Records

When a concrete production facility does not have sufficient field strength test records for calculation of the standard deviation, the required average strength f'cr shall be determined as follows:

a. If the specified compressive strength f'c is less than 3,000 psi,

f'cr = f'c + 1000 psi

b. If the specified compressive strength f'c is 3,000 to 5,000 psi,

f'cr = f'c + 1,200 psi

c. If the specified compressive strength f'c is over 5,000 psi,

f'cr = f'c + 1,400 psi

1.8 STORAGE OF MATERIALS

Cement and other cementitious materials shall be stored in weathertight buildings, bins, or silos which will exclude moisture and contaminants and keep each material completely separated. Aggregate stockpiles shall be arranged and used in a manner to avoid excessive segregation and to prevent contamination with other materials or with other sizes of aggregates. Aggregate shall not be stored directly on ground unless a sacrificial layer is left undisturbed. Reinforcing bars and accessories shall be stored above the ground on platforms, skids or other supports. Other materials shall be stored in such a manner as to avoid contamination and deterioration. Admixtures which have been in storage at the project site for longer than 6 months or which have been subjected to freezing shall not be used unless retested and proven to meet the specified requirements. Materials shall be capable of being accurately identified after bundles or containers are opened.

1.9 GOVERNMENT ASSURANCE INSPECTION AND TESTING

Day-to day inspection and testing shall be the responsibility of the Contractor Quality Control (CQC) staff. However, representatives of the Contracting Officer can and will inspect construction as considered appropriate and will monitor operations of the Contractor's CQC staff. Government inspection or testing will not relieve the Contractor of any of his CQC responsibilities.

1.9.1 Materials

The Government will sample and test aggregates, cementitious materials, other materials, and concrete to determine compliance with the specifications as considered appropriate. The Contractor shall provide facilities and labor as may be necessary for procurement of representative test samples. Samples of aggregates will be obtained at the point of batching in accordance with ASTM D 75. Other materials will be sampled from storage at the jobsite or from other locations as considered appropriate. Samples may be placed in storage for later testing when appropriate.

1.9.2 Fresh Concrete

Fresh concrete will be sampled as delivered in accordance with ASTM C 172 and tested in accordance with these specifications, as considered necessary.

1.9.3 Hardened Concrete

Tests on hardened concrete will be performed by the Government when such tests are considered necessary.

1.9.4 Inspection

Concrete operations may be tested and inspected by the Government as the project progresses. Failure to detect defective work or material will not

prevent rejection later when a defect is discovered nor will it obligate the Government for final acceptance.

PART 2 PRODUCTS

2.1 CEMENTITIOUS MATERIALS

Cementitious Materials shall be portland cement, portland-pozzolan cement, portland blast-furnace slag cement, or portland cement in combination with pozzolan or ground granulated blast furnace slag and shall conform to appropriate specifications listed below. Use of cementitious materials in concrete which will have surfaces exposed in the completed structure shall be restricted so there is no change in color, source, or type of cementitious material.

2.1.1 Portland Cement

ASTM C 150, Type II low alkali including false set requirements.

2.1.2 High-Early-Strength Portland Cement

ASTM C 150, Type III with tricalcium aluminate limited to 5 percent, low alkali. Type III cement shall be used only in isolated instances and only when approved in writing.

2.1.3 Blended Cements

ASTM C 595, Type IP (MS), IS (MS).

2.1.4 Pozzolan (Fly Ash)

ASTM C 618, Class C F with the optional requirements for multiple factor, drying shrinkage, and uniformity from Table 2A of ASTM C 618. Requirement for maximum alkalies from Table 1A of ASTM C 618 shall apply. If pozzolan is used, it shall never be less than 15 percent nor more than 25 percent by weight of the total cementitious material. The Contractor shall comply with EPA requirements in accordance with Section 01670 RECYCLED / RECOVERED MATERIALS.

2.1.5 Ground Granulated Blast-Furnace (GGBF) Slag

ASTM C 989, Grade 120.

2.2 AGGREGATES

Aggregates shall conform to the following.

2.2.1 Fine Aggregate

Fine aggregate shall conform to the quality and gradation requirements of ASTM C 33.

2.2.2 Coarse Aggregate

Coarse aggregate shall conform to ASTM C 33, Class 5S, size designation 57.

2.3 CHEMICAL ADMIXTURES

Chemical admixtures, when required or permitted, shall conform to the

appropriate specification listed. Admixtures shall be furnished in liquid form and of suitable concentration for easy, accurate control of dispensing.

2.3.1 Air-Entraining Admixture

ASTM C 260 and shall consistently entrain the air content in the specified ranges under field conditions.

2.3.2 Accelerating Admixture

ASTM C 494/C 494M, Type C or E, except that calcium chloride or admixtures containing calcium chloride shall not be used.

2.3.3 Water-Reducing or Retarding Admixture

ASTM C 494/C 494M, Type A, B, or D, except that the 6-month and 1-year compressive and flexural strength tests are waived.

2.3.4 High-Range Water Reducer

ASTM C 494/C 494M, Type F or G, except that the 6-month and 1-year strength requirements are waived. The admixture shall be used only when approved in writing, such approval being contingent upon particular mixture control as described in the Contractor's Quality Control Plan and upon performance of separate mixture design studies.

2.3.5 Other Chemical Admixtures

Chemical admixtures for use in producing flowing concrete shall comply with ASTM C 1017/C 1017M, Type I or II. These admixtures shall be used only when approved in writing, such approval being contingent upon particular mixture control as described in the Contractor's Quality Control Plan and upon performance of separate mixture design studies.

2.4 CURING MATERIALS

2.4.1 Membrane-Forming Compound

Membrane-Forming curing compound shall conform to ASTM C 309, Type 1-D or 2, except that only a styrene acrylate or chlorinated rubber compound meeting Class B requirements shall be used for surfaces that are to be painted or are to receive bituminous roofing, or waterproofing, or floors that are to receive adhesive applications of resilient flooring. The curing compound selected shall be compatible with any subsequent paint, roofing, waterproofing, or flooring specified. Nonpigmented compound shall contain a fugitive dye, and shall have the reflective requirements in ASTM C 309 waived.

2.4.2 Burlap and Cotton Mat

Burlap and cotton mat used for curing shall conform to AASHTO M 182.

2.5 WATER

Water for mixing and curing shall be fresh, clean, potable, and free of injurious amounts of oil, acid, salt, or alkali, except that non-potable water may be used if it meets the requirements of COE CRD-C 400.

2.6 NONSHRINK GROUT

Nonshrink grout shall conform to ASTM C 1107, Grade A B C, and shall be a commercial formulation suitable for the proposed application.

2.7 NONSLIP SURFACING MATERIAL

See Section 09900.

2.8 LATEX BONDING AGENT

Latex agents for bonding fresh to hardened concrete shall conform to ASTM C 1059.

2.9 EPOXY RESIN

Epoxy resins for use in repairs shall conform to ASTM C 881, Type V, Grade 2. Class as appropriate to the existing ambient and surface temperatures.

2.10 EMBEDDED ITEMS

Embedded items shall be of the size and type indicated or as needed for the application.

2.11 FLOOR HARDENER

Floor hardener shall be a colorless aqueous solution containing zinc silicofluoride, magnesium silicofluoride, or sodium silicofluoride. These silicofluorides can be used individually or in combination. Proprietary hardeners may be used if approved in writing by the Contracting Officer.

2.12 VAPOR BARRIER

Vapor barrier shall be polyethylene sheeting with a minimum thickness of 6 mils or other equivalent material having a vapor permeance rating not exceeding 0.5 perms as determined in accordance with ASTM E 96.

2.13 JOINT MATERIALS

2.13.1 Joint Fillers, Sealers, and Waterstops

Expansion joint fillers shall be preformed materials conforming to ASTM D 1751. Materials for waterstops shall be in accordance with Section 03150 EXPANSION JOINTS, CONTRACTION JOINTS, AND WATERSTOPS. Materials for and sealing of joints shall conform to the requirements of Section 07900 JOINT SEALING.

2.13.2 Contraction Joints in Slabs

Contraction joints shall be sawed.

PART 3 EXECUTION

3.1 PREPARATION FOR PLACING

Before commencing concrete placement, the following shall be performed. Surfaces to receive concrete shall be clean and free from frost, ice, mud, and water. Forms shall be in place, cleaned, coated, and adequately supported, in accordance with Section 03100 STRUCTURAL CONCRETE FORMWORK. Reinforcing steel shall be in place, cleaned, tied, and adequately

supported, in accordance with Section 03200 CONCRETE REINFORCEMENT. Transporting and conveying equipment shall be in-place, ready for use, clean, and free of hardened concrete and foreign material. Equipment for consolidating concrete shall be at the placing site and in proper working order. Equipment and material for curing and for protecting concrete from weather or mechanical damage shall be at the placing site, in proper working condition and in sufficient amount for the entire placement. When hot, windy conditions during concreting appear probable, equipment and material shall be at the placing site to provide windbreaks, shading, fogging, or other action to prevent plastic shrinkage cracking or other damaging drying of the concrete.

3.1.1 Foundations

3.1.1.1 Concrete on Earth Foundations

Earth (subgrade, base, or subbase courses) surfaces upon which concrete is to be placed shall be clean, damp, and free from debris, frost, ice, and standing or running water. Prior to placement of concrete, the foundation shall be well drained and shall be satisfactorily graded and uniformly compacted.

3.1.1.2 Excavated Surfaces in Lieu of Forms

Concrete for footings may be placed directly against the soil provided the earth or rock has been carefully trimmed, is uniform and stable, and meets the compaction requirements of Section 02315EXCAVATION, FILLING, AND BACKFILLING FOR BUILDINGS. The concrete shall be placed without becoming contaminated by loose material, and the outline of the concrete shall be within the specified tolerances.

3.1.2 Previously Placed Concrete

3.1.2.1 Preparation of Previously Placed Concrete

Concrete surfaces to which other concrete is to be bonded shall be abraded in an approved manner that will expose sound aggregate uniformly without damaging the concrete. Laitance and loose particles shall be removed. Surfaces shall be thoroughly washed and shall be moist but without free water when concrete is placed.

3.1.3 Vapor Barrier

Vapor barrier shall be provided beneath the interior on-grade concrete floor slabs. The greatest widths and lengths practicable shall be used to eliminate joints wherever possible. Joints shall be lapped a minimum of 12 inches. Torn, punctured, or damaged vapor barrier material shall be removed and new vapor barrier shall be provided prior to placing concrete. For minor repairs, patches may be made using laps of at least 12 inches. Lapped joints shall be sealed and edges patched with pressure-sensitive adhesive or tape not less than 2 inches wide and compatible with the membrane. Vapor barrier shall be placed directly on underlying subgrade, base course, or capillary water barrier, unless it consists of crushed material or large granular material which could puncture the vapor barrier. In this case, the surface shall be choked with a light layer of sand, as approved, before placing the vapor barrier. Concrete placement shall be controlled so as to prevent damage to the vapor barrier.

3.1.4 Embedded Items

Before placement of concrete, care shall be taken to determine that all embedded items are firmly and securely fastened in place as indicated on the drawings, or required. Conduit and other embedded items shall be clean and free of oil and other foreign matter such as loose coatings or rust, paint, and scale. The embedding of wood in concrete will be permitted only when specifically authorized or directed. Voids in sleeves, inserts, and anchor slots shall be filled temporarily with readily removable materials to prevent the entry of concrete into voids. Welding shall not be performed on embedded metals within 1 feet of the surface of the concrete. Tack welding shall not be performed on or to embedded items.

3.2 CONCRETE PRODUCTION

3.2.1 Batching, Mixing, and Transporting Concrete

Concrete shall be furnished from a ready-mixed concrete plant. Ready-mixed concrete shall be batched, mixed, and transported in accordance with ASTM C 94/C 94M, except as otherwise specified. Truck mixers, agitators, and nonagitating transporting units shall comply with NRMCA TMMB 100. Ready-mix plant equipment and facilities shall be certified in accordance with NRMCA QC 3. Approved batch tickets shall be furnished for each load of ready-mixed concrete.

3.2.1.1 General

The batching plant shall be located off site close to the project. The batching plant shall conform to the requirements of NRMCA CPMB 100 and as specified; however, rating plates attached to batch plant equipment are not required.

3.2.1.2 Batching Equipment

The batching controls shall be semiautomatic or automatic, as defined in NRMCA CPMB 100. A semiautomatic batching system shall be provided with interlocks such that the discharge device cannot be actuated until the indicated material is within the applicable tolerance. The batching system shall be equipped with accurate recorder or recorders that meet the requirements of NRMCA CPMB 100. The weight of water and admixtures shall be recorded if batched by weight. Separate bins or compartments shall be provided for each size group of aggregate and type of cementitious material, to prevent intermingling at any time. Aggregates shall be weighed either in separate weigh batchers with individual scales or, provided the smallest size is batched first, cumulatively in one weigh batcher on one scale. Aggregate shall not be weighed in the same batcher with cementitious material. If both portland cement and other cementitious material are used, they may be batched cumulatively, provided that the portland cement is batched first. Water may be measured by weight or volume. Water shall not be weighed or measured cumulatively with another ingredient. Filling and discharging valves for the water metering or batching system shall be so interlocked that the discharge valve cannot be opened before the filling valve is fully closed. Piping for water and for admixtures shall be free from leaks and shall be properly valved to prevent backflow or siphoning. Admixtures shall be furnished as a liquid of suitable concentration for easy control of dispensing. An adjustable, accurate, mechanical device for measuring and dispensing each admixture shall be provided. Each admixture dispenser shall be interlocked with the batching and discharging operation of the water so that each admixture is separately batched and individually discharged automatically in a manner to

obtain uniform distribution throughout the water as it is added to the batch in the specified mixing period. Different admixtures shall not be combined prior to introduction in water and shall not be allowed to intermingle until in contact with the cement. Admixture dispensers shall have suitable devices to detect and indicate flow during dispensing or have a means for visual observation. The plant shall be arranged so as to facilitate the inspection of all operations at all times. Suitable facilities shall be provided for obtaining representative samples of aggregates from each bin or compartment, and for sampling and calibrating the dispensing of cementitious material, water, and admixtures. Filling ports for cementitious materials bins or silos shall be clearly marked with a permanent sign stating the contents.

3.2.1.3 Scales

The weighing equipment shall conform to the applicable requirements of CPMB Concrete Plant Standard, and of NIST HB 44, except that the accuracy shall be plus or minus 0.2 percent of scale capacity. The Contractor shall provide standard test weights and any other auxiliary equipment required for checking the operating performance of each scale or other measuring devices. The tests shall be made at the specified frequency in the presence of a Government inspector. The weighing equipment shall be arranged so that the plant operator can conveniently observe all dials or indicators.

3.2.1.4 Batching Tolerances

(A) Tolerances with Weighing Equipment

MATERIAL	PERCENT OF REQUIRED WEIGHT
Cementitious materials	0 to plus 2
Aggregate	plus or minus 2
Water	plus or minus 1
Chemical admixture	0 to plus 6

(B) Tolerances with Volumetric Equipment

For volumetric batching equipment used for water and admixtures, the following tolerances shall apply to the required volume of material being batched:

MATERIAL	PERCENT OF REQUIRED MATERIAL
Water:	plus or minus 1 percent
Chemical admixtures:	0 to plus 6 percent

3.2.1.5 Moisture Control

The plant shall be capable of ready adjustment to compensate for the varying moisture content of the aggregates and to change the weights of the materials being batched.

3.2.1.6 Concrete Mixers

Mixers shall be stationary mixers. Mixers shall be capable of combining the materials into a uniform mixture and of discharging this mixture

without segregation. The mixers shall not be charged in excess of the capacity recommended by the manufacturer. The mixers shall be operated at the drum or mixing blade speed designated by the manufacturer. The mixers shall be maintained in satisfactory operating condition, and the mixer drums shall be kept free of hardened concrete. Should any mixer at any time produce unsatisfactory results, its use shall be promptly discontinued until it is repaired.

3.2.1.7 Stationary Mixers

Concrete plant mixers shall be drum-type mixers of tilting, nontilting, horizontal-shaft, or vertical-shaft type, or shall be pug mill type and shall be provided with an acceptable device to lock the discharge mechanism until the required mixing time has elapsed. The mixing time and uniformity shall conform to all the requirements in ASTM C 94/C 94M applicable to central-mixed concrete.

3.3 TRANSPORTING CONCRETE TO PROJECT SITE

Concrete shall be transported to the placing site in truck mixers, agitators, or by approved pumping equipment.

3.4 CONVEYING CONCRETE ON SITE

Concrete shall be conveyed from mixer or transporting unit to forms as rapidly as possible and within the time interval specified by methods which will prevent segregation or loss of ingredients using following equipment. Conveying equipment shall be cleaned before each placement. All concrete test specimens conveyed by concrete pumps shall be taken at the discharge end of the hose.

3.4.1 Buckets

The interior hopper slope shall be not less than 58 degrees from the horizontal, the minimum dimension of the clear gate opening shall be at least 5 times the nominal maximum-size aggregate, and the area of the gate opening shall not be less than 2 square feet.The maximum dimension of the gate opening shall not be greater than twice the minimum dimension. The bucket gates shall be essentially grout tight when closed and may be manually, pneumatically, or hydraulically operated except that buckets larger than 2 cubic yardsshall not be manually operated. The design of the bucket shall provide means for positive regulation of the amount and rate of deposit of concrete in each dumping position.

3.4.2 Transfer Hoppers

Concrete may be charged into nonagitating hoppers for transfer to other conveying devices. Transfer hoppers shall be capable of receiving concrete directly from delivery vehicles and shall have conical-shaped discharge features. The transfer hopper shall be equipped with a hydraulically operated gate and with a means of external vibration to effect complete discharge. Concrete shall not be held in nonagitating transfer hoppers more than 30 minutes.

3.4.3 Trucks

Truck mixers operating at agitating speed or truck agitators used for transporting plant-mixed concrete shall conform to the requirements of ASTM C 94/C 94M. Nonagitating equipment shall be used only for transporting

plant-mixed concrete over a smooth road and when the hauling time is less than 15 minutes. Bodies of nonagitating equipment shall be smooth, watertight, metal containers specifically designed to transport concrete, shaped with rounded corners to minimize segregation, and equipped with gates that will permit positive control of the discharge of the concrete.

3.4.4 Chutes

When concrete can be placed directly from a truck mixer, agitator, or nonagitating equipment, the chutes normally attached to this equipment by the manufacturer may be used. A discharge deflector shall be used when required by the Contracting Officer. Separate chutes and other similar equipment will not be permitted for conveying concrete.

3.4.5 Concrete Pumps

Concrete may be conveyed by positive displacement pump when approved. The pumping equipment shall be piston or squeeze pressure type; pneumatic placing equipment shall not be used. The pipeline shall be rigid steel pipe or heavy-duty flexible hose. The inside diameter of the pipe shall be at least 3 times the nominal maximum-size coarse aggregate in the concrete mixture to be pumped but not less than 4 inches. Aluminum pipe shall not be used.

3.5 PLACING CONCRETE

Mixed concrete shall be discharged within 1-1/2 hours or before the mixer drum has revolved 300 revolutions, whichever comes first after the introduction of the mixing water to the cement and aggregates. When the concrete temperature exceeds 85 degrees F, the time shall be reduced to 45 minutes. Concrete shall be placed within 15 minutes after it has been discharged from the transporting unit. Concrete shall be handled from mixer or transporting unit to forms in a continuous manner until the approved unit of operation is completed. Adequate scaffolding, ramps and walkways shall be provided so that personnel and equipment are not supported by in-place reinforcement. Placing will not be permitted when the sun, heat, wind, or limitations of facilities furnished by the Contractor prevent proper consolidation, finishing and curing. Sufficient placing capacity shall be provided so that concrete can be kept free of cold joints.

3.5.1 Depositing Concrete

Concrete shall be deposited as close as possible to its final position in the forms, and there shall be no vertical drop greater than 5 feet except where suitable equipment is provided to prevent segregation and where specifically authorized. Depositing of the concrete shall be so regulated that it will be effectively consolidated in horizontal layers not more than 12 inches thick, except that all slabs shall be placed in a single layer. Concrete to receive other construction shall be screeded to the proper level. Concrete shall be deposited continuously in one layer or in layers so that fresh concrete is deposited on in-place concrete that is still plastic. Fresh concrete shall not be deposited on concrete that has hardened sufficiently to cause formation of seams or planes of weakness within the section. Concrete that has surface dried, partially hardened, or contains foreign material shall not be used. When temporary spreaders are used in the forms, the spreaders shall be removed as their service becomes unnecessary. Concrete shall not be placed in slabs over columns and walls until concrete in columns and walls has been in-place at least

two hours or until the concrete begins to lose its plasticity. Concrete for beams, girders, brackets, column capitals, haunches, and drop panels shall be placed at the same time as concrete for adjoining slabs.

3.5.2 Consolidation

Immediately after placing, each layer of concrete shall be consolidated by internal vibrators, except for slabs 4 inches thick or less. The vibrators shall at all times be adequate in effectiveness and number to properly consolidate the concrete; a spare vibrator shall be kept at the jobsite during all concrete placing operations. The vibrators shall have a frequency of not less than 10,000 vibrations per minute, an amplitude of at least 0.025 inch, and the head diameter shall be appropriate for the structural member and the concrete mixture being placed. Vibrators shall be inserted vertically at uniform spacing over the area of placement. The distance between insertions shall be approximately 1-1/2 times the radius of action of the vibrator so that the area being vibrated will overlap the adjacent just-vibrated area by a reasonable amount. The vibrator shall penetrate rapidly to the bottom of the layer and at least 6 inches into the preceding layer if there is such. Vibrator shall be held stationary until the concrete is consolidated and then vertically withdrawn slowly while operating. Form vibrators shall not be used unless specifically approved and unless forms are constructed to withstand their use. Vibrators shall not be used to move concrete within the forms. Slabs 4 inches and less in thickness shall be consolidated by properly designed vibrating screeds or other approved technique. Excessive vibration of lightweight concrete resulting in segration or flotation of coarse aggregate shall be prevented. Frequency and amplitude of vibrators shall be determined in accordance with COE CRD-C 521. Grate tampers ("jitterbugs") shall not be used.

3.5.3 Cold Weather Requirements

Special protection measures, approved by the Contracting Officer, shall be used if freezing temperatures are anticipated before the expiration of the specified curing period. The ambient temperature of the air where concrete is to be placed and the temperature of surfaces to receive concrete shall be not less than 40 degrees F. The temperature of the concrete when placed shall be not less than 50 degrees F nor more than 75 degrees F. Heating of the mixing water or aggregates will be required to regulate the concrete placing temperature. Materials entering the mixer shall be free from ice, snow, or frozen lumps. Salt, chemicals or other materials shall not be incorporated in the concrete to prevent freezing. Upon written approval, an accelerating admixture conforming to ASTM C 494/C 494M, Type C or E may be used, provided it contains no calcium chloride. Calcium chloride shall not be used.

3.5.4 Hot Weather Requirements

When the ambient temperature during concrete placing is expected to exceed 85 degrees F, the concrete shall be placed and finished with procedures previously submitted and as specified herein. The concrete temperature at time of delivery to the forms shall not exceed the temperature shown in the table below when measured in accordance with ASTM C 1064/C 1064M. Cooling of the mixing water or aggregates or placing concrete in the cooler part of the day may be required to obtain an adequate placing temperature. A retarder may be used, as approved, to facilitate placing and finishing. Steel forms and reinforcements shall be cooled as approved prior to concrete placement when steel temperatures are greater than 120 degrees F. Conveying and placing equipment shall be cooled if necessary to maintain

proper concrete-placing temperature.

Maximum Allowable Concrete Placing Temperature

Relative Humidity, Percent, During Time of Concrete Placement	Maximum Allowable Concrete Temperature Degrees
Greater than 60	90 F
40-60	85 F
Less than 40	80 F

3.5.5 Prevention of Plastic Shrinkage Cracking

During hot weather with low humidity, and particularly with appreciable wind, as well as interior placements when space heaters produce low humidity, the Contractor shall be alert to the tendency for plastic shrinkage cracks to develop and shall institute measures to prevent this. Particular care shall be taken if plastic shrinkage cracking is potentially imminent and especially if it has developed during a previous placement. Periods of high potential for plastic shrinkage cracking can be anticipated by use of Fig. 2.1.5 of ACI 305R. In addition the concrete placement shall be further protected by erecting shades and windbreaks and by applying fog sprays of water, sprinkling, ponding or wet covering. Plastic shrinkage cracks that occur shall be filled by injection of epoxy resin as directed, after the concrete hardens. Plastic shrinkage cracks shall never be troweled over or filled with slurry.

3.5.6 Placing Concrete in Congested Areas

Special care shall be used to ensure complete filling of the forms, elimination of all voids, and complete consolidation of the concrete when placing concrete in areas congested with reinforcing bars, embedded items, waterstops and other tight spacing. An appropriate concrete mixture shall be used, and the nominal maximum size of aggregate (NMSA) shall meet the specified criteria when evaluated for the congested area. Vibrators with heads of a size appropriate for the clearances available shall be used, and the consolidation operation shall be closely supervised to ensure complete and thorough consolidation at all points. Where necessary, splices of reinforcing bars shall be alternated to reduce congestion. Where two mats of closely spaced reinforcing are required, the bars in each mat shall be placed in matching alignment to reduce congestion. Reinforcing bars may be temporarily crowded to one side during concrete placement provided they are returned to exact required location before concrete placement and consolidation are completed.

3.5.7 Placing Flowable Concrete

If a plasticizing admixture conforming to ASTM C 1017/C 1017M is used or if a Type F or G high range water reducing admixture is permitted to increase the slump, the concrete shall meet all requirements of paragraph GENERAL REQUIREMENTS in PART 1. Extreme care shall be used in conveying and placing the concrete to avoid segregation. Consolidation and finishing shall meet all requirements of paragraphs Placing Concrete, Finishing Formed Surfaces, and Finishing Unformed Surfaces. No relaxation of requirements to accommodate flowable concrete will be permitted.

3.6 JOINTS

Joints shall be located and constructed as indicated or approved. Joints not indicated on the drawings shall be located and constructed to minimize the impact on the strength of the structure. Joints shall be perpendicular to the main reinforcement. All reinforcement shall be continued across joints; except that reinforcement or other fixed metal items shall not be continuous through expansion joints, or through construction or contraction joints in slabs on grade. The perimeters of the slabs shall be free of fins, rough edges, spalling, or other unsightly appearance. Reservoir for sealant for construction and contraction joints in slabs shall be formed by sawing to widen the top portion of sawed joints. Joints to be sealed shall be cleaned and sealed as indicated and in accordance with Section 07900 JOINT SEALING.

3.6.1 Construction Joints

For concrete other than slabs on grade, construction joints shall be located so that the unit of operation does not exceed 60 feet. Concrete shall be placed continuously so that each unit is monolithic in construction. Fresh concrete shall not be placed against adjacent hardened concrete until it is at least 24 hours old. Construction joints shall be located as indicated or approved. Where concrete work is interrupted by weather, end of work shift or other similar type of delay, location and type of construction joint shall be subject to approval of the Contracting Officer. Unless otherwise indicated and except for slabs on grade, reinforcing steel shall extend through construction joints. Construction joints in slabs on grade shall be keyed or doweled as shown. Concrete columns, walls, or piers shall be in place at least 2 hours, or until the concrete begins to lose its plasticity, before placing concrete for beams, girders, or slabs thereon. In walls having door or window openings, lifts shall terminate at the top and bottom of the opening. Other lifts shall terminate at such levels as to conform to structural requirements or architectural details. Where horizontal construction joints in walls or columns are required, a strip of 1 inchsquare-edge lumber, bevelled and oiled to facilitate removal, shall be tacked to the inside of the forms at the construction joint. Concrete shall be placed to a point 1 inch above the underside of the strip. The strip shall be removed 1 hour after the concrete has been placed, and any irregularities in the joint line shall be leveled off with a wood float, and all laitance shall be removed. Prior to placing additional concrete, horizontal construction joints shall be prepared as specified in paragraph Previously Placed Concrete.

3.6.2 Contraction Joints in Slabs on Grade

Contraction joints shall be located and detailed as shown on the drawings. Contraction Joints shall be produced by forming a weakened plane in the concrete slab by sawing a continuous slot with a concrete saw. Regardless of method used to produce the weakened plane, it shall be 1/4 the depth of the slab thickness and between 1/8 and 1/4 inch wide. For saw-cut joints, cutting shall be timed properly with the set of the concrete. Cutting shall be started as soon as the concrete has hardened sufficiently to prevent ravelling of the edges of the saw cut. Cutting shall be completed before shrinkage stresses become sufficient to produce cracking. Reservoir for joint sealant shall be formed as previously specified.

3.6.3 Expansion Joints

Installation of expansion joints and sealing of these joints shall conform

to the requirements of Section 03150 EXPANSION JOINTS, CONTRACTION JOINTS, AND WATERSTOPS and Section 07900 JOINT SEALING.

3.6.4 Waterstops

Waterstops shall be installed in conformance with the locations and details shown on the drawings using materials and procedures specified in Section 03150 EXPANSION JOINTS, CONTRACTION JOINTS, AND WATERSTOPS.

3.6.5 Dowels and Tie Bars

Dowels and tie bars shall be installed at the locations shown on the drawings and to the details shown, using materials and procedures specified in Section 03200 CONCRETE REINFORCEMENT and herein. Conventional smooth "paving" dowels shall be installed in slabs using approved methods to hold the dowel in place during concreting within a maximum alignment tolerance of 1/8 inch in 12 inches. "Structural" type deformed bar dowels, or tie bars, shall be installed to meet the specified tolerances. Care shall be taken during placing adjacent to and around dowels and tie bars to ensure there is no displacement of the dowel or tie bar and that the concrete completely embeds the dowel or tie bar and is thoroughly consolidated.

3.7 FINISHING FORMED SURFACES

Forms, form materials, and form construction are specified in Section 03100 STRUCTURAL CONCRETE FORMWORK. Finishing of formed surfaces shall be as specified herein. Unless another type of architectural or special finish is specified, surfaces shall be left with the texture imparted by the forms except that defective surfaces shall be repaired. Unless painting of surfaces is required, uniform color of the concrete shall be maintained by use of only one mixture without changes in materials or proportions for any structure or portion of structure that requires a Class A or B finish. Except for major defects, as defined hereinafter, surface defects shall be repaired as specified herein within 24 hours after forms are removed. Repairs of the so-called "plaster-type" will not be permitted in any location. Tolerances of formed surfaces shall conform to the requirements of ACI 117/117R. These tolerances apply to the finished concrete surface, not to the forms themselves; forms shall be set true to line and grade. Form tie holes requiring repair and other defects whose depth is at least as great as their surface diameter shall be repaired as specified in paragraph Damp-Pack Mortar Repair. Defects whose surface diameter is greater than their depth shall be repaired as specified in paragraph Repair of Major Defects. Repairs shall be finished flush with adjacent surfaces and with the same surface texture. The cement used for all repairs shall be a blend of job cement with white cement proportioned so that the final color after curing and aging will be the same as the adjacent concrete. Concrete with excessive honeycomb, or other defects which affect the strength of the member, will be rejected. Repairs shall be demonstrated to be acceptable and free from cracks or loose or drummy areas at the completion of the contract and, for Class A and B Finishes, shall be inconspicuous. Repairs not meeting these requirements will be rejected and shall be replaced.

3.7.1 Class A Finish and Class B Finish

Class A finish is required at all exposed areas and where indicated on the drawings. Class B finish is required where indicated on the drawings. Fins, ravelings, and loose material shall be removed, all surface defects over 1/2 inch in diameter or more than 1/2 inch deep, shall be repaired

and, except as otherwise indicated or as specified in Section 03100 STRUCTURAL CONCRETE FORMWORK, holes left by removal of form ties shall be reamed and filled. Defects more than 1/2 inch in diameter shall be cut back to sound concrete, but in all cases at least 1 inch deep. The Contractor shall prepare a sample panel for approval (as specified in PART 1) before commencing repair, showing that the surface texture and color match will be attained. Metal tools shall not be used to finish repairs in Class A surfaces.

3.7.2 Class C and Class D Finish

Class C finish is required for concealed areas not exposed to view and where indicated on the drawings. Class D finish is required for foundation surfaces against which backfill will be placed. Fins, ravelings, and loose material shall be removed, and, except as otherwise indicated or as specified in Section 03100 STRUCTURAL CONCRETE FORMWORK, holes left by removal of form ties shall be reamed and filled. Honeycomb and other defects more than 1/2 inch deep or more than 2 inches in diameter shall be repaired. Defects more than 2 inches in diameter shall be cut back to sound concrete, but in all cases at least 1 inch deep.

3.7.3 Architectural and Special Finishes

Special finishes shall conform to the requirements specified herein.

3.7.3.1 Sandblast Finish

The concrete surface shall be blasted at an approved age with approved wet sandblasting procedures to obtain a light-medium finish which will match the descriptive photographs in ACI 303R. The finish shall be approved by the Contracting Officer.

3.8 REPAIRS

3.8.1 Damp-Pack Mortar Repair

Form tie holes requiring repair and other defects whose depth is at least as great as their surface diameter but not over 4 inchesshall be repaired by the damp-pack mortar method. Form tie holes shall be reamed and other similar defects shall be cut out to sound concrete. The void shall then be thoroughly cleaned, thoroughly wetted, brush-coated with a thin coat of neat cement grout and filled with mortar. Mortar shall be a stiff mix of 1 part portland cement to 2 parts fine aggregate passing the No. 16 mesh sieve, and minimum amount of water. Only sufficient water shall be used to produce a mortar which, when used, will stick together on being molded into a ball by a slight pressure of the hands and will not exude water but will leave the hands damp. Mortar shall be mixed and allowed to stand for 30 to 45 minutes before use with remixing performed immediately prior to use. Mortar shall be thoroughly tamped in place in thin layers using a hammer and hardwood block. Holes passing entirely through walls shall be completely filled from the inside face by forcing mortar through to the outside face. All holes shall be packed full. Damp-pack repairs shall be moist cured for at least 48 hours.

3.8.2 Repair of Major Defects

Major defects will be considered to be those more than 1/2 inch deep or, for Class A and B finishes, more than 1/2 inch in diameter and, for Class C and D finishes, more than 2 inches in diameter. Also included are any

defects of any kind whose depth is over 4 inches or whose surface diameter is greater than their depth. Major defects shall be repaired as specified below.

3.8.2.1 Surface Application of Mortar Repair

Defective concrete shall be removed, and removal shall extend into completely sound concrete. Approved equipment and procedures which will not cause cracking or microcracking of the sound concrete shall be used. If reinforcement is encountered, concrete shall be removed so as to expose the reinforcement for at least 2 inches on all sides. All such defective areas greater than 12 square inchesshall be outlined by saw cuts at least 1 inch deep. Defective areas less than 12 square inches shall be outlined by a 1 inch deep cut with a core drill in lieu of sawing. All saw cuts shall be straight lines in a rectangular pattern in line with the formwork panels. After concrete removal, the surface shall be thoroughly cleaned by high pressure washing to remove all loose material. Surfaces shall be kept continually saturated for the first 12 of the 24 hours immediately before placing mortar and shall be damp but not wet at the time of commencing mortar placement. The Contractor, at his option, may use either hand-placed mortar or mortar placed with a mortar gun. If hand-placed mortar is used, the edges of the cut shall be perpendicular to the surface of the concrete. The prepared area shall be brush-coated with a thin coat of neat cement grout. The repair shall then be made using a stiff mortar, preshrunk by allowing the mixed mortar to stand for 30 to 45 minutes and then remixed, thoroughly tamped into place in thin layers. If hand-placed mortar is used, the Contractor shall test each repair area for drumminess by firm tapping with a hammer and shall inspect for cracks, both in the presence of the Contracting Officer's representative, immediately before completion of the contract, and shall replace any showing drumminess or cracking. If mortar placed with a mortar gun is used, the gun shall be a small compressed air-operated gun to which the mortar is slowly hand fed and which applies the mortar to the surface as a high-pressure stream, as approved. Repairs made using shotcrete equipment will not be accepted. The mortar used shall be the same mortar as specified for damp-pack mortar repair. If gun-placed mortar is used, the edges of the cut shall be beveled toward the center at a slope of 1:1. All surface applied mortar repairs shall be continuously moist cured for at least 7 days. Moist curing shall consist of several layers of saturated burlap applied to the surface immediately after placement is complete and covered with polyethylene sheeting, all held closely in place by a sheet of plywood or similar material rigidly braced against it. Burlap shall be kept continually wet.

3.9 FINISHING UNFORMED SURFACES

The finish of all unformed surfaces shall meet the requirements of paragraph Tolerances in PART 1, when tested as specified herein.

3.9.1 General

The ambient temperature of spaces adjacent to unformed surfaces being finished and of the base on which concrete will be placed shall be not less than 50 degrees F. In hot weather all requirements of paragraphs Hot Weather Requirements and Prevention of Plastic Shrinkage Cracking shall be met. Unformed surfaces that are not to be covered by additional concrete or backfill shall have a float finish, with additional finishing as specified below, and shall be true to the elevation shown on the drawings. Surfaces to receive additional concrete or backfill shall be brought to the

elevation shown on the drawings, properly consolidated, and left true and regular. Unless otherwise shown on the drawings, exterior surfaces shall be sloped for drainage, as directed. Where drains are provided, interior floors shall be evenly sloped to the drains. Joints shall be carefully made with a jointing or edging tool. The finished surfaces shall be protected from stains or abrasions. Grate tampers or "jitterbugs" shall not be used for any surfaces. The dusting of surfaces with dry cement or other materials or the addition of any water during finishing shall not be permitted. If bleedwater is present prior to finishing, the excess water shall be carefully dragged off or removed by absorption with porous materials such as burlap. During finishing operations, extreme care shall be taken to prevent over finishing or working water into the surface; this can cause "crazing" (surface shrinkage cracks which appear after hardening) of the surface. Any slabs with surfaces which exhibit significant crazing shall be removed and replaced. During finishing operations, surfaces shall be checked with a 10 foot straightedge, applied in both directions at regular intervals while the concrete is still plastic, to detect high or low areas.

3.9.2 Rough Slab Finish

As a first finishing operation for unformed surfaces and as final finish for slabs to receive mortar setting beds, the surface shall receive a rough slab finish prepared as follows. The concrete shall be uniformly placed across the slab area, consolidated as previously specified, and then screeded with straightedge strikeoffs immediately after consolidation to bring the surface to the required finish level with no coarse aggregate visible. Side forms and screed rails shall be provided, rigidly supported, and set to exact line and grade. Allowable tolerances for finished surfaces apply only to the hardened concrete, not to forms or screed rails. Forms and screed rails shall be set true to line and grade. "Wet screeds" shall not be used.

3.9.3 Floated Finish

Slabs to receive more than a rough slab finish shall next be given a wood float finish. Areas covered by equipment pads shall be given only a float finish. The screeding shall be followed immediately by darbying or bull floating before bleeding water is present, to bring the surface to a true, even plane. Then, after the concrete has stiffened so that it will withstand a man's weight without imprint of more than 1/4 inch and the water sheen has disappeared, it shall be floated to a true and even plane free of ridges. Floating shall be performed by use of suitable hand floats or power driven equipment. Sufficient pressure shall be used on the floats to bring a film of moisture to the surface. Hand floats shall be made of wood, magnesium, or aluminum. Lightweight concrete or concrete that exhibits stickiness shall be floated with a magnesium float. Care shall be taken to prevent over-finishing or incorporating water into the surface.

3.9.4 Troweled Finish

All building slabs shall be given a trowel finish. After floating is complete and after the surface moisture has disappeared, unformed surfaces shall be steel-troweled to a smooth, even, dense finish, free from blemishes including trowel marks. In lieu of hand finishing, an approved power finishing machine may be used in accordance with the directions of the machine manufacturer. Additional trowelings shall be performed, either by hand or machine until the surface has been troweled 3 times, with waiting period between each. Care shall be taken to prevent blistering and

if such occurs, troweling shall immediately be stopped and operations and surfaces corrected. A final hard steel troweling shall be done by hand, with the trowel tipped, and using hard pressure, when the surface is at a point that the trowel will produce a ringing sound. The finished surface shall be thoroughly consolidated and shall be essentially free of trowel marks and be uniform in texture and appearance. The concrete mixture used for troweled finished areas shall be adjusted, if necessary, in order to provide sufficient fines (cementitious material and fine sand) to finish properly.

3.9.5 Non-Slip Finish

Non-slip floors shall be constructed in accordance with the following subparagraphs.

3.9.5.1 Broomed

Exterior exposed foundations and slabs shall be given a broomed finish. After floating, the surface shall be lightly steel troweled, and then carefully scored by pulling a coarse fiber push-type broom across the surface. Brooming shall be transverse to traffic or at right angles to the slope of the slab. After the end of the curing period, the surface shall be vigorously broomed with a coarse fiber broom to remove all loose or semi-detached particles. A sample panel of the broom finish shall be prepared for the approval of the Contracting Officer.

3.10 FLOOR HARDENER

Areas as indicated on the drawings shall be treated with floor hardener. Floor hardener shall be applied after the concrete has been cured and then air dried for 28 days or as recommended by the manufacturer. Three coats shall be applied, each the day after the preceding coat was applied. For the first application, one pound of the silocofluoride shall be dissolved in one gallon of water. For subsequent applications, the solution shall be two pounds of silicofluoride to each gallon of water. Floor should be mopped with clear water shortly after the preceding application has dried to remove encrusted salts. Proprietary hardeners shall be applied in accordance with the manufacturer's instructions. During application, area should be well ventilated. Precautions shall be taken when applying silicofluorides due to the toxicity of the salts. Any compound that contacts glass or aluminum should be immediately removed with clear water.

3.11 EXTERIOR SLAB AND RELATED ITEMS

3.11.1 Pavements

See Section 02754.

3.11.2 Sidewalks

See Section 02770.

3.11.3 Curbs and Gutters

See Section 02770.

3.11.4 Pits and Trenches

Pits and trenches shall be constructed as indicated on the drawings.

Bottoms and walls shall be placed monolithically or waterstops and keys, shall be provided as approved.

3.12 CURING AND PROTECTION

3.12.1 General

Concrete shall be cured by an approved method for the period of time given below:

Concrete with Type III cement	3 days
All other concrete	7 days

Immediately after placement, concrete shall be protected from premature drying, extremes in temperatures, rapid temperature change, mechanical injury and damage from rain and flowing water for the duration of the curing period. Air and forms in contact with concrete shall be maintained at a temperature above 50 degrees F for the first 3 days and at a temperature above 32 degrees F for the remainder of the specified curing period. Exhaust fumes from combustion heating units shall be vented to the outside of the enclosure, and heaters and ducts shall be placed and directed so as not to cause areas of overheating and drying of concrete surfaces or to create fire hazards. Materials and equipment needed for adequate curing and protection shall be available and at the site prior to placing concrete. No fire or excessive heat, including welding, shall be permitted near or in direct contact with the concrete at any time. Except as otherwise permitted by paragraph Membrane Forming Curing Compounds, moist curing shall be provided for any areas to receive floor hardener, any paint or other applied coating, or to which other concrete is to be bonded. Concrete containing silica fume shall be initially cured by fog misting during finishing, followed immediately by continuous moist curing. Except for plastic coated burlap, impervious sheeting alone shall not be used for curing.

3.12.2 Moist Curing

Concrete to be moist-cured shall be maintained continuously wet for the entire curing period, commencing immediately after finishing. If water or curing materials used stain or discolor concrete surfaces which are to be permanently exposed, the concrete surfaces shall be cleaned as approved. When wooden forms are left in place during curing, they shall be kept wet at all times. If steel forms are used in hot weather, nonsupporting vertical forms shall be broken loose from the concrete soon after the concrete hardens and curing water continually applied in this void. If the forms are removed before the end of the curing period, curing shall be carried out as on unformed surfaces, using suitable materials. Surfaces shall be cured by ponding, by continuous sprinkling, by continuously saturated burlap or cotton mats, or by continuously saturated plastic coated burlap. Burlap and mats shall be clean and free from any contamination and shall be completely saturated before being placed on the concrete. The Contractor shall have an approved work system to ensure that moist curing is continuous 24 hours per day.

3.12.3 Membrane Forming Curing Compounds

Membrane forming curing compounds may be used. Membrane curing shall not be used on surfaces that are to receive any subsequent treatment depending on adhesion or bonding to the concrete, including surfaces to which a smooth finish is to be applied or other concrete to be bonded. However, a

styrene acrylate or chlorinated rubber compound meeting ASTM C 309, Class B requirements, may be used for surfaces which are to be painted or are to receive bituminous roofing or waterproofing, or floors that are to receive adhesive applications of resilient flooring. The curing compound selected shall be compatible with any subsequent paint, roofing, waterproofing or flooring specified. Membrane curing compound shall not be used on surfaces that are maintained at curing temperatures with free steam. Curing compound shall be applied to formed surfaces immediately after the forms are removed and prior to any patching or other surface treatment except the cleaning of loose sand, mortar, and debris from the surface. All surfaces shall be thoroughly moistened with water. Curing compound shall be applied to slab surfaces as soon as the bleeding water has disappeared, with the tops of joints being temporarily sealed to prevent entry of the compound and to prevent moisture loss during the curing period. The curing compound shall be applied in a two-coat continuous operation by approved motorized power-spraying equipment operating at a minimum pressure of 75 psi, at a uniform coverage of not more than 400 square feet per gallon for each coat, and the second coat shall be applied perpendicular to the first coat. Concrete surfaces which have been subjected to rainfall within 3 hours after curing compound has been applied shall be resprayed by the method and at the coverage specified. Surfaces on which clear compound is used shall be shaded from direct rays of the sun for the first 3 days. Surfaces coated with curing compound shall be kept free of foot and vehicular traffic, and from other sources of abrasion and contamination during the curing period.

3.12.4 Ponding or Immersion

Concrete shall be continually immersed throughout the curing period. Water shall not be more than 20 degrees F less than the temperature of the concrete.

3.12.5 Cold Weather Curing and Protection

When the daily ambient low temperature is less than 32 degrees F the temperature of the concrete shall be maintained above 40 degrees F for the first seven days after placing. During the period of protection removal, the air temperature adjacent to the concrete surfaces shall be controlled so that concrete near the surface will not be subjected to a temperature differential of more than 25 degrees F as determined by suitable temperature measuring devices furnished by the Contractor, as required, and installed adjacent to the concrete surface and 2 inches inside the surface of the concrete. The installation of the thermometers shall be made by the Contractor as directed.

3.13 SETTING BASE PLATES AND BEARING PLATES

After being properly positioned, column base plates, bearing plates for beams and similar structural members, and machinery and equipment base plates shall be set to the proper line and elevation with damp-pack bedding mortar, except where nonshrink grout is indicated. The thickness of the mortar or grout shall be approximately 1/24 the width of the plate, but not less than 3/4 inch. Concrete and metal surfaces in contact with grout shall be clean and free of oil and grease, and concrete surfaces in contact with grout shall be damp and free of laitance when grout is placed. Nonshrink grout shall be used as indicated.

3.13.1 Damp-Pack Bedding Mortar

Damp-pack bedding mortar shall consist of 1 part cement and 2-1/2 parts fine aggregate having water content such that a mass of mortar tightly squeezed in the hand will retain its shape but will crumble when disturbed. The space between the top of the concrete and bottom of the bearing plate or base shall be packed with the bedding mortar by tamping or ramming with a bar or rod until it is completely filled.

3.13.2 Nonshrink Grout

Nonshrink grout shall be a ready-mixed material requiring only the addition of water. Water content shall be the minimum that will provide a flowable mixture and completely fill the space to be grouted without segregation, bleeding, or reduction of strength.

3.13.2.1 Mixing and Placing of Nonshrink Grout

Mixing and placing shall be in conformance with the material manufacturer's instructions and as specified therein. Ingredients shall be thoroughly dry-mixed before adding water. After adding water, the batch shall be mixed for 3 minutes. Batches shall be of size to allow continuous placement of freshly mixed grout. Grout not used within 30 minutes after mixing shall be discarded. The space between the top of the concrete or machinery-bearing surface and the plate shall be filled solid with the grout. Forms shall be of wood or other equally suitable material for completely retaining the grout on all sides and on top and shall be removed after the grout has set. The placed grout shall be carefully worked by rodding or other means to eliminate voids; however, overworking and breakdown of the initial set shall be avoided. Grout shall not be retempered or subjected to vibration from any source. Where clearances are unusually small, placement shall be under pressure with a grout pump. Temperature of the grout, and of surfaces receiving the grout, shall be maintained at 65 to 85 degrees F until after setting.

3.13.2.2 Treatment of Exposed Surfaces

For metal-oxidizing nonshrink grout, exposed surfaces shall be cut back 1 inch and immediately covered with a parge coat of mortar consisting of 1 part portland cement and 2-1/2 parts fine aggregate by weight, with sufficient water to make a plastic mixture. The parge coat shall have a smooth finish. For other mortars or grouts, exposed surfaces shall have a smooth-dense finish and be left untreated. Curing shall comply with paragraph CURING AND PROTECTION.

3.14 TESTING AND INSPECTION FOR CONTRACTOR QUALITY CONTROL

The Contractor shall perform the inspection and tests described below and, based upon the results of these inspections and tests, shall take the action required and shall submit specified reports. When, in the opinion of the Contracting Officer, the concreting operation is out of control, concrete placement shall cease and the operation shall be corrected. The laboratory performing the tests shall be onsite and shall conform with ASTM C 1077. Materials may be subjected to check testing by the Government from samples obtained at the manufacturer, at transfer points, or at the project site. The Government will inspect the laboratory, equipment, and test procedures prior to start of concreting operations and at least once per month thereafter for conformance with ASTM C 1077.

3.14.1 Grading and Corrective Action

3.14.1.1 Fine Aggregate

At least once during each shift when the concrete plant is operating, there shall be one sieve analysis and fineness modulus determination in accordance with ASTM C 136 and COE CRD-C 104 for the fine aggregate or for each fine aggregate if it is batched in more than one size or classification. The location at which samples are taken may be selected by the Contractor as the most advantageous for control. However, the Contractor is responsible for delivering fine aggregate to the mixer within specification limits. When the amount passing on any sieve is outside the specification limits, the fine aggregate shall be immediately resampled and retested. If there is another failure on any sieve, the fact shall immediately reported to the Contracting Officer, concreting shall be stopped, and immediate steps taken to correct the grading.

3.14.1.2 Coarse Aggregate

At least once during each shift in which the concrete plant is operating, there shall be a sieve analysis in accordance with ASTM C 136 for each size of coarse aggregate. The location at which samples are taken may be selected by the Contractor as the most advantageous for production control. However, the Contractor shall be responsible for delivering the aggregate to the mixer within specification limits. A test record of samples of aggregate taken at the same locations shall show the results of the current test as well as the average results of the five most recent tests including the current test. The Contractor may adopt limits for control coarser than the specification limits for samples taken other than as delivered to the mixer to allow for degradation during handling. When the amount passing any sieve is outside the specification limits, the coarse aggregate shall be immediately resampled and retested. If the second sample fails on any sieve, that fact shall be reported to the Contracting Officer. Where two consecutive averages of 5 tests are outside specification limits, the operation shall be considered out of control and shall be reported to the Contracting Officer. Concreting shall be stopped and immediate steps shall be taken to correct the grading.

3.14.2 Quality of Aggregates

Thirty days prior to the start of concrete placement, the Contractor shall perform all tests for aggregate quality required by ASTM C 33. In addition, after the start of concrete placement, the Contractor shall perform tests for aggregate quality at least every three months, and when the source of aggregate or aggregate quality changes. Samples tested after the start of concrete placement shall be taken immediately prior to entering the concrete mixer.

3.14.3 Scales, Batching and Recording

The accuracy of the scales shall be checked by test weights prior to start of concrete operations and at least once every three months. Such tests shall also be made as directed whenever there are variations in properties of the fresh concrete that could result from batching errors. Once a week the accuracy of each batching and recording device shall be checked during a weighing operation by noting and recording the required weight, recorded weight, and the actual weight batched. At the same time, the Contractor shall test and ensure that the devices for dispensing admixtures are operating properly and accurately. When either the weighing accuracy or batching accuracy does not comply with specification requirements, the plant shall not be operated until necessary adjustments or repairs have

been made. Discrepancies in recording accuracies shall be corrected immediately.

3.14.4 Batch-Plant Control

The measurement of concrete materials including cementitious materials, each size of aggregate, water, and admixtures shall be continuously controlled. The aggregate weights and amount of added water shall be adjusted as necessary to compensate for free moisture in the aggregates. The amount of air-entraining agent shall be adjusted to control air content within specified limits. A report shall be prepared indicating type and source of cement used, type and source of pozzolan or slag used, amount and source of admixtures used, aggregate source, the required aggregate and water weights per cubic yard, amount of water as free moisture in each size of aggregate, and the batch aggregate and water weights per cubic yard for each class of concrete batched during each day's plant operation.

3.14.5 Concrete Mixture

a. Air Content Testing. Air content tests shall be made when test specimens are fabricated. In addition, at least two tests for air content shall be made on randomly selected batches of each separate concrete mixture produced during each 8-hour period of concrete production. Additional tests shall be made when excessive variation in workability is reported by the placing foreman or Government inspector. Tests shall be made in accordance with ASTM C 231 for normal weight concrete and ASTM C 173 for lightweight concrete. Test results shall be plotted on control charts which shall at all times be readily available to the Government and shall be submitted weekly. Copies of the current control charts shall be kept in the field by testing crews and results plotted as tests are made. When a single test result reaches either the upper or lower action limit, a second test shall immediately be made. The results of the two tests shall be averaged and this average used as the air content of the batch to plot on both the air content and the control chart for range, and for determining need for any remedial action. The result of each test, or average as noted in the previous sentence, shall be plotted on a separate control chart for each mixture on which an "average line" is set at the midpoint of the specified air content range from paragraph Air Entrainment. An upper warning limit and a lower warning limit line shall be set 1.0 percentage point above and below the average line, respectively. An upper action limit and a lower action limit line shall be set 1.5 percentage points above and below the average line, respectively. The range between each two consecutive tests shall be plotted on a secondary control chart for range where an upper warning limit is set at 2.0 percentage points and an upper action limit is set at 3.0 percentage points. Samples for air content may be taken at the mixer, however, the Contractor is responsible for delivering the concrete to the placement site at the stipulated air content. If the Contractor's materials or transportation methods cause air content loss between the mixer and the placement, correlation samples shall be taken at the placement site as required by the Contracting Officer, and the air content at the mixer controlled as directed.

b. Air Content Corrective Action. Whenever points on the control chart for percent air reach either warning limit, an adjustment

shall immediately be made in the amount of air-entraining admixture batched. As soon as practical after each adjustment, another test shall be made to verify the result of the adjustment. Whenever a point on the secondary control chart for range reaches the warning limit, the admixture dispenser shall be recalibrated to ensure that it is operating accurately and with good reproducibility. Whenever a point on either control chart reaches an action limit line, the air content shall be considered out of control and the concreting operation shall immediately be halted until the air content is under control. Additional air content tests shall be made when concreting is restarted.

c. Slump Testing. In addition to slump tests which shall be made when test specimens are fabricated, at least four slump tests shall be made on randomly selected batches in accordance with ASTM C 143/C 143M for each separate concrete mixture produced during each 8-hour or less period of concrete production each day. Also, additional tests shall be made when excessive variation in workability is reported by the placing foreman or Government inspector. Test results shall be plotted on control charts which shall at all times be readily available to the Government and shall be submitted weekly. Copies of the current control charts shall be kept in the field by testing crews and results plotted as tests are made. When a single slump test reaches or goes beyond either the upper or lower action limit, a second test shall immediately be made. The results of the two tests shall be averaged and this average used as the slump of the batch to plot on both the control charts for slump and the chart for range, and for determining need for any remedial action. Limits shall be set on separate control charts for slump for each type of mixture. The upper warning limit shall be set at 1/2 inch below the maximum allowable slump specified in paragraph Slump in PART 1 for each type of concrete and an upper action limit line and lower action limit line shall be set at the maximum and minimum allowable slumps, respectively, as specified in the same paragraph. The range between each consecutive slump test for each type of mixture shall be plotted on a single control chart for range on which an upper action limit is set at 2 inches. Samples for slump shall be taken at the mixer. However, the Contractor is responsible for delivering the concrete to the placement site at the stipulated slump. If the Contractor's materials or transportation methods cause slump loss between the mixer and the placement, correlation samples shall be taken at the placement site as required by the Contracting Officer, and the slump at the mixer controlled as directed.

d. Slump Corrective Action. Whenever points on the control charts for slump reach the upper warning limit, an adjustment shall immediately be made in the batch weights of water and fine aggregate. The adjustments are to be made so that the total water content does not exceed that amount allowed by the maximum w/c ratio specified, based on aggregates which are in a saturated surface dry condition. When a single slump reaches the upper or lower action limit, no further concrete shall be delivered to the placing site until proper adjustments have been made. Immediately after each adjustment, another test shall be made to verify the correctness of the adjustment. Whenever two consecutive individual slump tests, made during a period when there was no adjustment of batch weights, produce a point on the control chart

for range at or above the upper action limit, the concreting operation shall immediately be halted, and the Contractor shall take appropriate steps to bring the slump under control. Additional slump tests shall be made as directed.

e. Temperature. The temperature of the concrete shall be measured when compressive strength specimens are fabricated. Measurement shall be in accordance with ASTM C 1064/C 1064M. The temperature shall be reported along with the compressive strength data.

f. Strength Specimens. At least one set of test specimens shall be made, for compressive or flexural strength as appropriate, on each different concrete mixture placed during the day for each 100 cubic yards or portion thereof of that concrete mixture placed each day. Additional sets of test specimens shall be made, as directed by the Contracting Officer, when the mixture proportions are changed or when low strengths have been detected. A truly random (not haphazard) sampling plan shall be developed by the Contractor and approved by the Contracting Officer prior to the start of construction. The plan shall assure that sampling is done in a completely random and unbiased manner. A set of test specimens for concrete with a 28-day specified strength per paragraph Strength Requirements in PART 1 shall consist of four specimens, two to be tested at 7 days and two at 28 days. Test specimens shall be molded and cured in accordance with ASTM C 31/C 31M and tested in accordance with ASTM C 39/C 39M for test cylinders and ASTM C 78 for test beams. Results of all strength tests shall be reported immediately to the Contracting Officer. Quality control charts shall be kept for individual strength "tests", ("test" as defined in paragraph Strength Requirements in PART 1) moving average of last 3 "tests" for strength, and moving average for range for the last 3 "tests" for each mixture. The charts shall be similar to those found in ACI 214.3R.

3.14.6 Inspection Before Placing

Foundations, construction joints, forms, and embedded items shall be inspected by the Contractor in sufficient time prior to each concrete placement in order to certify to the Contracting Officer that they are ready to receive concrete. The results of each inspection shall be reported in writing.

3.14.7 Placing

The placing foreman shall supervise placing operations, shall determine that the correct quality of concrete or grout is placed in each location as specified and as directed by the Contracting Officer, and shall be responsible for measuring and recording concrete temperatures and ambient temperature hourly during placing operations, weather conditions, time of placement, volume placed, and method of placement. The placing foreman shall not permit batching and placing to begin until it has been verified that an adequate number of vibrators in working order and with competent operators are available. Placing shall not be continued if any pile of concrete is inadequately consolidated. If any batch of concrete fails to meet the temperature requirements, immediate steps shall be taken to improve temperature controls.

3.14.8 Vibrators

The frequency and amplitude of each vibrator shall be determined in accordance with COE CRD-C 521 prior to initial use and at least once a month when concrete is being placed. Additional tests shall be made as directed when a vibrator does not appear to be adequately consolidating the concrete. The frequency shall be determined while the vibrator is operating in concrete with the tachometer being held against the upper end of the vibrator head while almost submerged and just before the vibrator is withdrawn from the concrete. The amplitude shall be determined with the head vibrating in air. Two measurements shall be taken, one near the tip and another near the upper end of the vibrator head, and these results averaged. The make, model, type, and size of the vibrator and frequency and amplitude results shall be reported in writing. Any vibrator not meeting the requirements of paragraph Consolidation, shall be immediately removed from service and repaired or replaced.

3.14.9 Curing Inspection

a. Moist Curing Inspections. At least once each shift, and not less than twice per day on both work and non-work days, an inspection shall be made of all areas subject to moist curing. The surface moisture condition shall be noted and recorded.

b. Moist Curing Corrective Action. When a daily inspection report lists an area of inadequate curing, immediate corrective action shall be taken, and the required curing period for those areas shall be extended by 1 day.

c. Membrane Curing Inspection. No curing compound shall be applied until the Contractor has verified that the compound is properly mixed and ready for spraying. At the end of each operation, the Contractor shall estimate the quantity of compound used by measurement of the container and the area of concrete surface covered, shall compute the rate of coverage in square feet per gallon, and shall note whether or not coverage is uniform.

d. Membrane Curing Corrective Action. When the coverage rate of the curing compound is less than that specified or when the coverage is not uniform, the entire surface shall be sprayed again.

3.14.10 Cold-Weather Protection

At least once each shift and once per day on non-work days, an inspection shall be made of all areas subject to cold-weather protection. Any deficiencies shall be noted, corrected, and reported.

3.14.11 Mixer Uniformity

a. Stationary Mixers. Prior to the start of concrete placing and once every 6 months when concrete is being placed, or once for every 75,000 cubic yards of concrete placed, whichever results in the shortest time interval, uniformity of concrete mixing shall be determined in accordance with ASTM C 94/C 94M.

b. Truck Mixers. Prior to the start of concrete placing and at least once every 6 months when concrete is being placed, uniformity of concrete mixing shall be determined in accordance with ASTM C 94/C 94M. The truck mixers shall be selected randomly for testing. When satisfactory performance is found in one truck mixer, the performance of mixers of substantially the same design and

condition of the blades may be regarded as satisfactory.

c. Mixer Uniformity Corrective Action. When a mixer fails to meet mixer uniformity requirements, either the mixing time shall be increased, batching sequence changed, batch size reduced, or adjustments shall be made to the mixer until compliance is achieved.

3.14.12 Reports

All results of tests or inspections conducted shall be reported informally as they are completed and in writing daily. A weekly report shall be prepared for the updating of control charts covering the entire period from the start of the construction season through the current week. During periods of cold-weather protection, reports of pertinent temperatures shall be made daily. These requirements do not relieve the Contractor of the obligation to report certain failures immediately as required in preceding paragraphs. Such reports of failures and the action taken shall be confirmed in writing in the routine reports. The Contracting Officer has the right to examine all contractor quality control records.

-- End of Section --

SECTION 04200

MASONRY
10/01

PART 1 GENERAL

1.1 REFERENCES

The publications listed below form a part of this specification to the extent referenced. The publications are referred to in the text by basic designation only.

ACI INTERNATIONAL (ACI)

ACI SP-66	(1994) ACI Detailing Manual

AMERICAN SOCIETY FOR TESTING AND MATERIALS (ASTM)

ASTM A 82	(1997a) Steel Wire, Plain, for Concrete Reinforcement
ASTM A 153/A 153M	(2000) Zinc Coating (Hot-Dip) on Iron and Steel Hardware
ASTM A 615/A 615M	(2000) Deformed and Plain Billet-Steel Bars for Concrete Reinforcement
ASTM C 67	(2000) Sampling and Testing Brick and Structural Clay Tile
ASTM C 90	(2000) Loadbearing Concrete Masonry Units
ASTM C 140	(1999b) Sampling and Testing Concrete Masonry Units
ASTM C 270	(2000) Mortar for Unit Masonry
ASTM C 476	(1999) Grout for Masonry
ASTM C 494/C 494M	(1999a) Chemical Admixtures for Concrete
ASTM C 641	(1982; R 1998el) Staining Materials in Lightweight Concrete Aggregates
ASTM C 780	(2000) Preconstruction and Construction Evaluation of Mortars for Plain and Reinforced Unit Masonry
ASTM C 1019	(2000) Sampling and Testing Grout
ASTM C 1072	(2000) Measurement of Masonry Flexural Bond Strength
ASTM D 2000	(1999) Rubber Products in Automotive Applications

ASTM D 2240	(2000) Rubber Property - Durometer Hardness
ASTM D 2287	(1996a) Nonrigid Vinyl Chloride Polymer and Copolymer Molding and Extrusion Compounds
ASTM E 447	(1997) Compressive Strength of Masonry Prisms

1.2 SUBMITTALS

Government approval is required for submittals with a "G" designation; submittals not having a "G" designation are for information only. When used, a designation following the "G" designation identifies the office that will review the submittal for the Government. The following shall be submitted in accordance with Section 01330 SUBMITTAL PROCEDURES:

SD-02 Shop Drawings

Masonry Work; G

Drawings including plans, elevations, and details of wall reinforcement; details of reinforcing bars at corners and wall intersections; offsets; tops, bottoms, and ends of walls; control and expansion joints; and wall openings. Bar splice locations shall be shown. Drawings shall be provided showing the location and layout of glass block units. Bent bars shall be identified on a bending diagram and shall be referenced and located on the drawings. Wall dimensions, bar clearances, and wall openings greater than one masonry unit in area shall be shown. No approval will be given to the shop drawings until the Contractor certifies that all openings, including those for mechanical and electrical service, are shown. If, during construction, additional masonry openings are required, the approved shop drawings shall be resubmitted with the additional openings shown along with the proposed changes. Location of these additional openings shall be clearly highlighted. The minimum scale for wall elevations shall be 1/4 inch per foot. Reinforcement bending details shall conform to the requirements of ACI SP-66.

SD-03 Product Data

Cold Weather Installation

Cold weather construction procedures.

SD-04 Samples

Concrete Masonry Units (CMU)

Color samples of three stretcher units and one unit for each type of special shape. Units shall show the full range of color and texture.

Anchors, Ties, and Bar Positioners

Two of each type used.

Expansion-Joint Materials

One piece of each type used.

Joint Reinforcement; G

One piece of each type used, including corner and wall intersection pieces, showing at least two cross wires.

SD-06 Test Reports

Efflorescence Test; G
Field Testing of Mortar; G
Field Testing of Grout; G
Prism tests; G
Masonry Cement; G

Test reports from an approved independent laboratory. Test reports on a previously tested material shall be certified as the same as that proposed for use in this project.

SD-07 Certificates

Concrete Masonry Units (CMU)
Control Joint Keys
Anchors, Ties, and Bar Positioners
Joint Reinforcement
Reinforcing Steel Bars and Rods
Masonry Cement
Precast Concrete Items
Mortar Admixtures
Grout Admixtures

Certificates of compliance stating that the materials meet the specified requirements.

1.3 DELIVERY, HANDLING, AND STORAGE

Materials shall be delivered, handled, stored, and protected to avoid chipping, breakage, and contact with soil or contaminating material.

1.3.1 Masonry Units

Concrete masonry units shall be covered or protected from inclement weather. Prefabricated lintels shall be marked on top sides to show either the lintel schedule number or the number and size of top and bottom bars.

1.3.2 Reinforcement, Anchors, and Ties

Steel reinforcing bars, coated anchors, ties, and joint reinforcement shall be stored above the ground. Steel reinforcing bars and uncoated ties shall be free of loose mill scale and rust.

1.3.3 Cementitious Materials, Sand and Aggregates

Cementitious and other packaged materials shall be delivered in unopened containers, plainly marked and labeled with manufacturers' names and brands. Cementitious material shall be stored in dry, weathertight enclosures or be completely covered. Cement shall be handled in a manner that will prevent the inclusion of foreign materials and damage by water or

dampness. Sand and aggregates shall be stored in a manner to prevent contamination or segregation.

PART 2 PRODUCTS

2.1 GENERAL REQUIREMENTS

The source of materials which will affect the appearance of the finished work shall not be changed after the work has started except with Contracting Officer's approval.

2.2 CLAY OR SHALE BRICK (FACE BRICK)

Reference Section 04220A, Non-Bearing Masonry Veneer/Steel Stud Walls for Face Brick.

2.3 CONCRETE MASONRY UNITS (CMU)

Hollow and solid concrete masonry units shall conform to ASTM C 90. Cement shall have a low alkali content and be of one brand.

2.3.1 Aggregates

Lightweight aggregates and blends of lightweight and heavier aggregates in proportions used in producing the units, shall comply with the following requirements when tested for stain-producing iron compounds in accordance with ASTM C 641: by visual classification method, the iron stain deposited on the filter paper shall not exceed the "light stain" classification.

2.3.2 Kinds and Shapes

Units shall be modular in size and shall include closer, jamb, header, lintel, and bond beam units and special shapes and sizes to complete the work as indicated.

TABLE I

FIRE-RATED CONCRETE MASONRY UNITS

See note (a) below

Aggregate Type	Minimum equivalent thickness inches for fire rating of: 4 hours	3 hours	2 hours
Pumice	4.7	4.0	3.0
Expanded slag	5.0	4.2	3.3
Expanded clay, shale, or slate	5.7	4.8	3.7
Limestone, scoria, cinders or unexpanded slag	5.9	5.0	4.0
Calcareous gravel	6.2	5.3	4.2

TABLE I

FIRE-RATED CONCRETE MASONRY UNITS

	See note (a) below		
Siliceous gravel	6.7	5.7	4.5

(a) Minimum equivalent thickness shall equal net volume as determined in conformance with ASTM C 140 divided by the product of the actual length and height of the face shell of the unit in inches. Where walls are to be faced with brick, or otherwise form an assembly; the thickness of brick or other material in the assembly will be included in determining the equivalent thickness.

2.6.5 Horizontal Joint Reinforcement

Joint reinforcement shall be factory fabricated from steel wire, and shall conform to ASTM A 82. Wire shall be zinc coated after fabrication by the hot-dip process conforming to ASTM A 153/A 153M, Class B-2. All reinforcement shall consist of two or more parallel longitudinal wires not lighter than 9 gauge weld connected with cross wires not lighter than 14 gauge at not greater than 8 inches on center. Out-to-out dimension of the longitudinal wires shall be 1-1/2 inches less than the actual width of the block. Joint reinforcement in flat sections not less than 8 feet long shall be provided, except that corner reinforcements and other special shapes may be shorter.

2.6.7 Wire-Type Anchor

Steel wire shall be not less than 9 gauge of approved design suitable for use with the panel stiffener provided and galvanized after fabrication.

2.6.9 Packing (Backer Rods)

Polyethylene foam, neoprene, or filler shall be as recommended by the sealant manufacturer.

2.4 CAST STONE

Reference Section 04720, "CAST STONE" for Exterior Masonry Ornamental Units, Screen Wall Caps and Window Sills/Lintels.

2.4.1 Lintels

Precast lintels, unless otherwise shown, shall be of a thickness equal to the wall and reinforced with two No. 4 bars for the full length. Top of lintels shall be labeled "TOP" or otherwise identified and each lintel shall be clearly marked to show location in the structure.

2.5 MORTAR

Mortar shall be Type S in accordance with the proportion specification of ASTM C 270 except Type S cement-lime mortar proportions shall be 1 part cement, 1/2 part lime and 4-1/2 parts aggregate; Verification of masonry cement performance shall be based on ASTM C 780 and ASTM C 1072. Mortar for prefaced concrete masonry unit wainscots shall contain aggregates with 100 percent passing the No. 8 sieve and 95 percent passing the No. 16 sieve. Cement shall have a low alkali content and be of one brand.

Aggregates shall be from one source.

2.5.1 Mortar Admixtures

In cold weather, a non-chloride based accelerating admixture may be used subject to approval. Accelerating admixture shall be non-corrosive, shall contain less than 0.2 percent chlorides, and shall conform to ASTM C 494/C 494M, Type C.

2.5.2 Coloring

Reference Section 04220A, Nonbearing Masonry Veneer/Steel Study Walls for Mortar Coloring.

2.6 GROUT

Grout shall conform to ASTM C 476. Cement used in grout shall have a low alkali content. Grout slump shall be between 8 and 10 inches. Grout shall be used subject to the limitations of Table III. Proportions shall not be changed and materials with different physical or chemical characteristics shall not be used in grout for the work unless additional evidence is furnished that the grout meets the specified requirements.

2.6.1 Grout Admixtures

In cold weather, a non-chloride based accelerating admixture may be used subject to approval. Accelerating admixture shall be non-corrosive, shall contain less than 0.2 percent chlorides, and shall conform to ASTM C 494/C 494M, Type C.

2.6.2 Grout Barriers

Grout barriers for vertical cores shall consist of fine mesh wire, fiberglass, or expanded metal.

2.7 ANCHORS, TIES, AND BAR POSITIONERS

Anchors and ties shall be fabricated without drips or crimps and shall be zinc-coated in accordance with ASTM A 153/A 153M, Class B-2. Steel wire used for anchors and ties shall be fabricated from steel wire conforming to ASTM A 82. Anchors and ties shall be sized to provide a minimum of 5/8 inch mortar cover from either face.

2.7.1 Adjustable Anchors

Adjustable anchors shall be 3/16 inch diameter steel wire, triangular-shaped. Anchors attached to steel shall be 5/16 inch diameter steel bars placed to provide 1/16 inch play between flexible anchors and structural steel members. Spacers shall be welded to rods and columns. Equivalent welded-on steel anchor rods or shapes standard with the flexible-anchor manufacturer may be furnished when approved. Welds shall be cleaned and given one coat of zinc-rich touch up paint.

2.7.2 Bar Positioners

Bar positioners, used to prevent displacement of reinforcing bars during the course of construction, shall be factory fabricated from 9 gauge steel wire or equivalent, and coated with a hot-dip galvanized finish. Not more than one wire shall cross the cell.

2.8 JOINT REINFORCEMENT

Joint reinforcement shall be factory fabricated from steel wire conforming to ASTM A 82, welded construction. Tack welding will not be acceptable in reinforcement used for wall ties. Wire shall have zinc coating conforming to ASTM A 153/A 153M, Class B-2. All wires shall be a minimum of 9 gauge. Reinforcement shall be ladder type design, having one longitudinal wire in the mortar bed of each face shell for hollow units and one wire for solid units. Joint reinforcement shall be placed a minimum of 5/8 inch cover from either face. The distance between crosswires shall not exceed 16 inches. Joint reinforcement for straight runs shall be furnished in flat sections not less than 10 feet long. Joint reinforcement shall be provided with factory formed corners and intersections. If approved for use, joint reinforcement may be furnished with adjustable wall tie features.

2.9 REINFORCING STEEL BARS AND RODS

Reinforcing steel bars and rods shall conform to ASTM A 615/A 615M, Grade 60.

2.10 CONTROL JOINT KEYS

Control joint keys shall be a factory fabricated solid section of natural or synthetic rubber (or combination thereof) conforming to ASTM D 2000or polyvinyl chloride conforming to ASTM D 2287. The material shall be resistant to oils and solvents. The control joint key shall be provided with a solid shear section not less than 5/8 inchthick and 3/8 inch thick flanges, with a tolerance of plus or minus 1/16 inch. The control joint key shall fit neatly, but without forcing, in masonry unit jamb sash grooves. The control joint key shall be flexible at a temperature of minus 30 degrees F after five hours exposure, and shall have a durometer hardness of not less than 70 when tested in accordance with ASTM D 2240.

2.11 EXPANSION-JOINT MATERIALS

Backer rod and sealant shall be adequate to accommodate joint compression equal to 50 percent of the width of the joint. The backer rod shall be compressible rod stock of polyethylene foam, polyurethane foam, butyl rubber foam, or other flexible, nonabsorptive material as recommended by the sealant manufacturer. Sealant shall conform to Section 07900 JOINT SEALING.

2.12 FLASHING

Flashing shall be as specified in Section 07600 SHEET METALWORK, GENERAL.

2.13 WEEP HOLE VENTILATORS

Weephole ventilators shall be prefabricated aluminum grill type vents designed to prevent insect entry with maximum air entry. Ventilators shall be sized to match modular construction with a standard 3/8 inch mortar joint.

PART 3 EXECUTION

3.1 ENVIRONMENTAL REQUIREMENTS

3.1.1 Hot Weather Installation

The following precautions shall be taken if masonry is erected when the ambient air temperature is more than 99 degrees F in the shade and the relative humidity is less than 50 percent. All Masonry Work and materials shall be shaded from direct sunlight; mortar beds shall be spread no more than 4 feet ahead of masonry; masonry units shall be set within one minute of spreading mortar; and after erection, masonry shall be protected from direct exposure to wind and sun for 48 hours.

3.1.2 Cold Weather Installation

Before erecting masonry when ambient temperature or mean daily air temperature falls below 40 degrees F, a written statement of proposed cold weather construction procedures shall be submitted for approval. The following precautions shall be taken during all cold weather erection.

3.1.2.1 Preparation

Ice or snow formed on the masonry bed shall be thawed by the application of heat. Heat shall be applied carefully until the top surface of the masonry is dry to the touch. Sections of masonry deemed frozen and damaged shall be removed before continuing construction of those sections.

a. Air Temperature 40 to 32 Degrees F. Sand or mixing water shall be heated to produce mortar temperatures between 40 and 120 degrees F.

b. Air Temperature 32 to 25 Degrees F. Sand and mixing water shall be heated to produce mortar temperatures between 40 and 120 degrees F. Temperature of mortar on boards shall be maintained above freezing.

c. Air Temperature 25 to 20 Degrees F. Sand and mixing water shall be heated to provide mortar temperatures between 40 and 120 degrees F. Temperature of mortar on boards shall be maintained above freezing. Sources of heat shall be used on both sides of walls under construction. Windbreaks shall be employed when wind is in excess of 15 mph.

d. Air Temperature 20 Degrees F and below. Sand and mixing water shall be heated to provide mortar temperatures between 40 and 120 degrees F. Enclosure and auxiliary heat shall be provided to maintain air temperature above 32 degrees F. Temperature of units when laid shall not be less than 20 degrees F.

3.1.2.2 Completed Masonry and Masonry Not Being Worked On

a. Mean daily air temperature 40 to 32 degrees F. Masonry shall be protected from rain or snow for 24 hours by covering with weather-resistive membrane.

b. Mean daily air temperature 32 to 25 degrees F. Masonry shall be completely covered with weather-resistant membrane for 24 hours.

c. Mean Daily Air Temperature 25 to 20 degrees F. Masonry shall be completely covered with insulating blankets or equally protected for 24 hours.

d. Mean Daily Temperature 20 degrees F and Below. Masonry temperature shall be maintained above 32 degrees F for 24 hours by

enclosure and supplementary heat, by electric heating blankets, infrared heat lamps, or other approved methods.

3.2 LAYING MASONRY UNITS

Unless shown otherwise, masonry units shall be laid in running bond pattern. Facing courses shall be level with back-up courses, unless the use of adjustable ties has been approved in which case the tolerances shall be plus or minus 1/2 inch. Each unit shall be adjusted to its final position while mortar is still soft and plastic. Units that have been disturbed after the mortar has stiffened shall be removed, cleaned, and relaid with fresh mortar. Air spaces, cavities, chases, expansion joints, and spaces to be grouted shall be kept free from mortar and other debris. Units used in exposed masonry surfaces shall be selected from those having the least amount of chipped edges or other imperfections detracting from the appearance of the finished work. Vertical joints shall be kept plumb. Units being laid and surfaces to receive units shall be free of water film and frost. Solid units shall be laid in a nonfurrowed full bed of mortar. Mortar for veneer wythes shall be beveled and sloped toward the center of the wythe from the cavity side. Units shall be shoved into place so that the vertical joints are tight. Vertical joints of brick and the vertical face shells of concrete masonry units, except where indicated at control, expansion, and isolation joints, shall be completely filled with mortar. Mortar will be permitted to protrude up to 1/2 inch into the space or cells to be grouted. Means shall be provided to prevent mortar from dropping into the space below. In double wythe construction, the inner wythe may be brought up not more than 16 inches ahead of the outer wythe. Collar joints shall be filled with mortar or grout during the laying of the facing wythe, and filling shall not lag the laying of the facing wythe by more than 8 inches.

3.2.1 Surface Preparation

Surfaces upon which masonry is placed shall be cleaned of laitance, dust, dirt, oil, organic matter, or other foreign materials and shall be slightly roughened to provide a surface texture with a depth of at least 1/8 inch. Sandblasting shall be used, if necessary, to remove laitance from pores and to expose the aggregate.

3.2.2 Forms and Shores

Forms and shores shall be sufficiently rigid to prevent deflections which may result in cracking or other damage to supported masonry and sufficiently tight to prevent leakage of mortar and grout. Supporting forms and shores shall not be removed in less than 10 days.

3.2.3 Concrete Masonry Units

Units in piers, solid foundation walls, lintels, and beams, and where cells are to be filled with grout shall be full bedded in mortar under both face shells and webs. Other units shall be full bedded under both face shells. Head joints shall be filled solidly with mortar for a distance in from the face of the unit not less than the thickness of the face shell. Foundation walls below grade shall be grouted solid. Jamb units shall be of the shapes and sizes to conform with wall units. Solid units may be incorporated in the masonry work where necessary to fill out at corners, gable slopes, and elsewhere as approved. Double walls shall be stiffened at wall-mounted plumbing fixtures by use of strap anchors, two above each fixture and two below each fixture, located to avoid pipe runs, and

extending from center to center of the double wall. Walls and partitions shall be adequately reinforced for support of wall-hung plumbing fixtures when chair carriers are not specified.

3.2.4 Clay or Shale Brick Units

Brick facing shall be laid with the better face exposed. Brick shall be laid in running bond with each course bonded at corners, unless otherwise indicated.

3.2.4.1 Wetting of Units

Wetting of clay, shale brick, or hollow brick units having an initial rate of absorption of more than 1 gram per minute per square inch of bed surface shall be in conformance with ASTM C 67. The method of wetting shall ensure that each unit is nearly saturated but surface dry when laid.

3.2.4.2 Solid Units

Bed, head, and collar joints shall be completely filled with mortar.

3.2.4.3 Hollow Units

Hollow units shall be laid as specified for concrete masonry units.

3.2.5 Tolerances

Masonry shall be laid plumb, true to line, with courses level. Bond pattern shall be kept plumb throughout. Corners shall be square unless noted otherwise. Except for walls constructed of prefaced concrete masonry units, masonry shall be laid within the following tolerances (plus or minus unless otherwise noted):

TABLE II

TOLERANCES

Variation from the plumb in the lines and surfaces of columns, walls and arises	
In adjacent masonry units	1/8 inch
In 10 feet	1/4 inch
In 20 feet	3/8 inch
In 40 feet or more	1/2 inch
Variations from the plumb for external corners, expansion joints, and other conspicuous lines	
In 20 feet	1/4 inch
In 40 feet or more	1/2 inch
Variations from the level for exposed lintels, sills, parapets, horizontal grooves, and other conspicuous lines	
In 20 feet	1/4 inch

TOLERANCES

In 40 feet or more	1/2 inch

Variation from level for bed joints and top surfaces of bearing walls

In 10 feet	1/4 inch
In 40 feet or more	1/2 inch

Variations from horizontal lines

In 10 feet	1/4 inch
In 20 feet	3/8 inch
In 40 feet or more	1/2 inch

Variations in cross sectional dimensions of columns and in thickness of walls

Minus	1/4 inch
Plus	1/2 inch

3.2.6 Cutting and Fitting

Full units of the proper size shall be used wherever possible, in lieu of cut units. Cutting and fitting, including that required to accommodate the work of others, shall be done by masonry mechanics using power masonry saws. Concrete masonry units may be wet or dry cut. Wet cut units, before being placed in the work, shall be dried to the same surface-dry appearance as uncut units being laid in the wall. Cut edges shall be clean, true and sharp. Openings in the masonry shall be made carefully so that wall plates, cover plates or escutcheons required by the installation will completely conceal the openings and will have bottoms parallel with the masonry bed joints. Reinforced masonry lintels shall be provided above openings over 12 inches wide for pipes, ducts, cable trays, and other wall penetrations, unless steel sleeves are used.

3.2.7 Jointing

Joints shall be tooled when the mortar is thumbprint hard. Horizontal joints shall be tooled last. Joints shall be brushed to remove all loose and excess mortar.

3.2.7.1 Flush Joints

Joints in concealed masonry surfaces and joints at electrical outlet boxes in wet areas shall be flush cut. Flush cut joints shall be made by cutting off the mortar flush with the face of the wall.

3.2.7.2 Tooled Joints

Joints in exposed exterior and interior masonry surfaces shall be tooled slightly concave. Joints shall be tooled with a jointer slightly larger than the joint width so that complete contact is made along the edges of the unit. Tooling shall be performed so that the mortar is compressed and the joint surface is sealed. Jointer of sufficient length shall be used to

obtain a straight and true mortar joint.

3.2.7.3 Door and Window Frame Joints

On the exposed interior side of exterior frames, joints between frames and abutting masonry walls shall be raked to a depth of 3/8 inch. On the exterior side of exterior frames, joints between frames and abutting masonry walls shall be raked to a depth of 3/8 inch.

3.2.8 Joint Widths

Joint widths shall be as follows:

3.2.8.1 Concrete Masonry Units

Concrete masonry units shall have 3/8 inch joints, except for prefaced concrete masonry units.

3.2.8.2 Brick

Brick joint widths shall be the difference between the actual and nominal dimensions of the brick in either height or length. Brick expansion joint widths shall be as shown.

3.2.9 Embedded Items

Spaces around built-in items shall be filled with mortar. Openings around flush-mount electrical outlet boxes in wet locations shall be pointed with mortar. Anchors, ties, wall plugs, accessories, flashing, pipe sleeves and other items required to be built-in shall be embedded as the masonry work progresses. Anchors, ties and joint reinforcement shall be fully embedded in the mortar. Cells receiving anchor bolts and cells of the first course below bearing plates shall be filled with grout.

3.2.10 Unfinished Work

Unfinished work shall be stepped back for joining with new work. Toothing may be resorted to only when specifically approved. Loose mortar shall be removed and the exposed joints shall be thoroughly cleaned before laying new work.

3.2.11 Masonry Wall Intersections

Each course shall be masonry bonded at corners and elsewhere as shown. Masonry walls shall be anchored or tied together at corners and intersections with bond beam reinforcement and prefabricated corner or tee pieces of joint reinforcement as shown.

3.2.12 Partitions

Partitions shall be continuous from floor to underside of roof deck where shown. Openings in firewalls around joists or other structural members shall be filled as indicated or approved. An isolation joint shall be placed in the intersection between partitions and structural or exterior walls as shown. Cells within vertical plane of ties shall be filled solid with grout for full height of partition or solid masonry units may be used. Interior partitions having masonry walls over 4 inches thick shall be tied together with joint reinforcement. Partitions containing joint reinforcement shall be provided with prefabricated pieces at corners and

intersections or partitions.

3.3 WEEP HOLES

Weep holes shall be provided not more than 24 inches on centers in mortar joints of the exterior wythe above wall flashing, over foundations, bond beams, and any other horizontal interruptions of the cavity. Weep holes shall be constructed using weep hole ventilators. Other approved methods may be used for providing weep holes. Weep holes shall be kept free of mortar and other obstructions.

3.4 MORTAR

Mortar shall be mixed in a mechanically operated mortar mixer for at least 3 minutes, but not more than 5 minutes. Measurement of ingredients for mortar shall be by volume. Ingredients not in containers, such as sand, shall be accurately measured by the use of measuring boxes. Water shall be mixed with the dry ingredients in sufficient amount to provide a workable mixture which will adhere to the vertical surfaces of masonry units. Mortar that has stiffened because of loss of water through evaporation shall be retempered by adding water to restore the proper consistency and workability. Mortar that has reached its initial set or that has not been used within 2-1/2 hours after mixing shall be discarded.

3.5 REINFORCING STEEL

Reinforcement shall be cleaned of loose, flaky rust, scale, grease, mortar, grout, or other coating which might destroy or reduce its bond prior to placing grout. Bars with kinks or bends not shown on the drawings shall not be used. Reinforcement shall be placed prior to grouting. Unless otherwise indicated, vertical wall reinforcement shall extend to within 2 inches of tops of walls.

3.5.1 Positioning Bars

Vertical bars shall be accurately placed within the cells at the positions indicated on the drawings. A minimum clearance of 1/2 inch shall be maintained between the bars and masonry units. Minimum clearance between parallel bars shall be one diameter of the reinforcement. Vertical reinforcing may be held in place using bar positioners located near the ends of each bar and at intermediate intervals of not more than 192 diameters of the reinforcement. Column and pilaster ties shall be wired in position around the vertical steel. Ties shall be in contact with the vertical reinforcement and shall not be placed in horizontal bed joints. Coordinate placement of electrical conduits where they do not occur in masonry cells that contain vertical reinforcing bars.

3.5.2 Splices

Bars shall be lapped a minimum of 48 diameters of the reinforcement. Welded or mechanical connections shall develop at least 125 percent of the specified yield strength of the reinforcement.

3.6 JOINT REINFORCEMENT

Joint reinforcement shall be installed at 16 inches on center or as indicated. Reinforcement shall be lapped not less than 6 inches. Prefabricated sections shall be installed at corners and wall intersections. The longitudinal wires of joint reinforcement shall be

placed to provide not less than 5/8 inch cover to either face of the unit.

3.7 PLACING GROUT

Cells containing reinforcing bars shall be filled with grout. Hollow masonry units in walls or partitions supporting plumbing, heating, or other mechanical fixtures, voids at door and window jambs, and other indicated spaces shall be filled solid with grout. Cells under lintel bearings on each side of openings shall be filled solid with grout for full height of openings. Walls below grade, lintels, and bond beams shall be filled solid with grout. Units other than open end units may require grouting each course to preclude voids in the units. Grout not in place within 1-1/2 hours after water is first added to the batch shall be discarded. Sufficient time shall be allowed between grout lifts to preclude displacement or cracking of face shells of masonry units. If blowouts, flowouts, misalignment, or cracking of face shells should occur during construction, the wall shall be torn down and rebuilt.

3.7.1 Vertical Grout Barriers for Fully Grouted Walls

Grout barriers shall be provided not more than 30 feet apart, or as required, to limit the horizontal flow of grout for each pour.

3.7.2 Horizontal Grout Barriers

Grout barriers shall be embedded in mortar below cells of hollow units receiving grout.

3.7.3 Grout Holes and Cleanouts

3.7.3.1 Grout Holes

Grouting holes shall be provided in slabs, spandrel beams, and other in-place overhead construction. Holes shall be located over vertical reinforcing bars or as required to facilitate grout fill in bond beams. Additional openings spaced not more than 16 inches on centers shall be provided where grouting of all hollow unit masonry is indicated. Openings shall not be less than 4 inches in diameter or 3 by 4 inches in horizontal dimensions. Upon completion of grouting operations, grouting holes shall be plugged and finished to match surrounding surfaces.

3.7.3.2 Cleanouts for Hollow Unit Masonry Construction

Cleanout holes shall be provided at the bottom of every pour in cores containing vertical reinforcement when the height of the grout pour exceeds 5 feet. Where all cells are to be grouted, cleanout courses shall be constructed using bond beam units in an inverted position to permit cleaning of all cells. Cleanout holes shall be provided at a maximum spacing of 32 inches where all cells are to be filled with grout. A new series of cleanouts shall be established if grouting operations are stopped for more than 4 hours. Cleanouts shall not be less than 3 by 4 inch openings cut from one face shell. Manufacturer's standard cutout units may be used at the Contractor's option. Cleanout holes shall not be closed until masonry work, reinforcement, and final cleaning of the grout spaces have been completed and inspected. For walls which will be exposed to view, cleanout holes shall be closed in an approved manner to match surrounding masonry.

3.7.3.3 Cleanouts for Solid Unit Masonry Construction

Cleanouts for construction of walls consisting of a grout filled cavity between solid masonry wythes shall be provided at the bottom of every pour by omitting every other masonry unit from one wythe. A new series of cleanouts shall be established if grouting operations are stopped for more than 4 hours. Cleanout holes shall not be plugged until masonry work, reinforcement, and final cleaning of the grout spaces have been completed and inspected. For walls which will be exposed to view, cleanout holes shall be closed in an approved manner to match surrounding masonry.

3.7.4 Grouting Equipment

3.7.4.1 Grout Pumps

Pumping through aluminum tubes will not be permitted. Pumps shall be operated to produce a continuous stream of grout without air pockets, segregation, or contamination. Upon completion of each day's pumping, waste materials and debris shall be removed from the equipment, and disposed of outside the masonry.

3.7.4.2 Vibrators

Internal vibrators shall maintain a speed of not less than 5,000 impulses per minute when submerged in the grout. At least one spare vibrator shall be maintained at the site at all times. Vibrators shall be applied at uniformly spaced points not further apart than the visible effectiveness of the machine. Duration of vibration shall be limited to time necessary to produce satisfactory consolidation without causing segregation.

3.7.5 Grout Placement

Masonry shall be laid to the top of a pour before placing grout. Grout shall not be placed in two-wythe solid unit masonry cavity until mortar joints have set for at least 3 days during hot weather and 5 days during cold damp weather. Grout shall not be placed in hollow unit masonry until mortar joints have set for at least 24 hours. Grout shall be placed using a hand bucket, concrete hopper, or grout pump to completely fill the grout spaces without segregation of the aggregates. Vibrators shall not be inserted into lower pours that are in a semi-solidified state. The height of grout pours and type of grout used shall be limited by the dimensions of grout spaces as indicated in Table III. Low-lift grout methods may be used on pours up to and including 5 feet in height. High-lift grout methods shall be used on pours exceeding 5 feet in height.

3.7.5.1 Low-Lift Method

Grout shall be placed at a rate that will not cause displacement of the masonry due to hydrostatic pressure of the grout. Mortar protruding more than 1/2 inch into the grout space shall be removed before beginning the grouting operation. Grout pours 12 inches or less in height shall be consolidated by mechanical vibration or by puddling. Grout pours over 12 inches in height shall be consolidated by mechanical vibration and reconsolidated by mechanical vibration after initial water loss and settlement has occurred. Vibrators shall not be inserted into lower pours that are in a semi-solidified state. Low-lift grout shall be used subject to the limitations of Table III.

3.7.5.2 High-Lift Method

Mortar droppings shall be cleaned from the bottom of the grout space and from reinforcing steel. Mortar protruding more than 1/4 inch into the grout space shall be removed by dislodging the projections with a rod or stick as the work progresses. Reinforcing, bolts, and embedded connections shall be rigidly held in position before grouting is started. CMU units shall not be pre-wetted. Grout, from the mixer to the point of deposit in the grout space shall be placed as rapidly as practical by pumping and placing methods which will prevent segregation of the mix and cause a minimum of grout splatter on reinforcing and masonry surfaces not being immediately encased in the grout lift. The individual lifts of grout shall be limited to 4 feet in height. The first lift of grout shall be placed to a uniform height within the pour section and vibrated thoroughly to fill all voids. This first vibration shall follow immediately behind the pouring of the grout using an approved mechanical vibrator. After a waiting period sufficient to permit the grout to become plastic, but before it has taken any set, the succeeding lift shall be poured and vibrated 12 to 18 inches into the preceding lift. If the placing of the succeeding lift is going to be delayed beyond the period of workability of the preceding, each lift shall be reconsolidated by reworking with a second vibrator as soon as the grout has taken its settlement shrinkage. The waiting, pouring, and reconsolidation steps shall be repeated until the top of the pour is reached. The top lift shall be reconsolidated after the required waiting period. The high-lift grouting of any section of wall between vertical grout barriers shall be completed to the top of a pour in one working day unless a new series of cleanout holes is established and the resulting horizontal construction joint cleaned. High-lift grout shall be used subject to the limitations in Table III.

TABLE III

POUR HEIGHT AND TYPE OF GROUT FOR VARIOUS GROUT SPACE DIMENSIONS

Maximum Grout Pour Height (feet) (4)	Grout Type	Grouting Procedure	Minimum Dimensions of the Total Clear Areas Within Grout Spaces and Cells (in.) (1,2) Multiwythe Masonry (3)	Hollow-unit Masonry
1	Fine	Low Lift	3/4	1-1/2 x 2
5	Fine	Low Lift	2	2 x 3
8	Fine	High Lift	2	2 x 3
12	Fine	High Lift	2-1/2	2-1/2 x 3
24	Fine	High Lift	3	3 x 3
1	Coarse	Low Lift	1-1/2	1-1/2 x 3
5	Coarse	Low Lift	2	2-1/2 x 3
8	Coarse	High Lift	2	3 x 3
12	Coarse	High Lift	2-1/2	3 x 3
24	Coarse	High Lift	3	3 x 4

Notes:

(1) The actual grout space or cell dimension must be larger than the sum of the following items:
a) The required minimum dimensions of total clear areas given in the table above;
b) The width of any mortar projections within the space;
c) The horizontal projections of the diameters of the horizontal reinforcing bars within a cross section of the grout space or cell.

(2) The minimum dimensions of the total clear areas shall be made up of one or more open areas, with at least one area being 3/4 inch or greater in width.

(3) For grouting spaces between masonry wythes.

(4) Where only cells of hollow masonry units containing reinforcement are grouted, the maximum height of the pour shall not exceed the distance between horizontal bond beams.

3.8 BOND BEAMS

Bond beams shall be filled with grout and reinforced as indicated on the drawings. Grout barriers shall be installed under bond beam units to retain the grout as required. Reinforcement shall be continuous, including around corners, except through control joints or expansion joints, unless otherwise indicated on the drawings. Where splices are required for continuity, reinforcement shall be lapped 48 bar diameters. A minimum clearance of 1/2 inch shall be maintained between reinforcement and interior faces of units.

3.9 CONTROL JOINTS

Control joints shall be provided as indicated and shall be constructed in accordance with the details shown on the drawings. Sash jamb units shall have a 3/4 by 3/4 inch groove near the center at end of each unit. The vertical mortar joint at control joint locations shall be continuous, including through all bond beams. This shall be accomplished by utilizing half blocks in alternating courses on each side of the joint. The control joint key shall be interrupted in courses containing continuous bond beam steel. In single wythe exterior masonry walls, the exterior control joints shall be raked to a depth of 3/4 inch; backer rod and sealant shall be installed in accordance with Section 07900 JOINT SEALING. Exposed interior control joints shall be raked to a depth of 1/4 inch. Concealed control joints shall be flush cut.

3.10 SHELF ANGLES

Shelf angles shall be adjusted as required to keep the masonry level and at the proper elevation. Shelf angles shall be galvanized. Shelf angles shall be provided in sections not longer than 10 feet and installed with a 1/4 inch gap between sections. Shelf angles shall be mitered and welded at building corners with each angle not shorter than 4 feet, unless limited by wall configuration.

3.11 LINTELS

3.11.1 Masonry Lintels

Masonry lintels shall be constructed with lintel units filled solid with grout in all courses and reinforced with a minimum of two No. 4 bars in the bottom course unless otherwise indicated on the drawings. Lintel reinforcement shall extend beyond each side of masonry opening 40 bar diameters or 24 inches, whichever is greater. Reinforcing bars shall be supported in place prior to grouting and shall be located 1/2 inch above the bottom inside surface of the lintel unit.

3.11.2 Precast Concrete Items and Steel Lintels

Precast concrete and steel lintels shall be as shown on the drawings. Lintels shall be set in a full bed of mortar with faces plumb and true. Steel and precast lintels shall have a minimum bearing length of 8 inches unless otherwise indicated on the drawings.

3.12 SILLS AND COPINGS

Sills and copings shall be set in a full bed of mortar with faces plumb and true.

3.13 ANCHORAGE TO CONCRETE AND STRUCTURAL STEEL

3.13.1 Anchorage to Concrete

Anchorage of masonry to the face of concrete columns, beams, or walls shall be with dovetail anchors spaced not over 16 inches on centers vertically and 24 inches on center horizontally.

3.13.2 Anchorage to Structural Steel

Masonry shall be anchored to vertical structural steel framing with adjustable steel wire anchors spaced not over 16 inches on centers vertically, and if applicable, not over 24 inches on centers horizontally.

3.14 POINTING AND CLEANING

After mortar joints have attained their initial set, but prior to hardening, mortar and grout daubs or splashings shall be completely removed from masonry-unit surfaces that will be exposed or painted. Before completion of the work, defects in joints of masonry to be exposed or painted shall be raked out as necessary, filled with mortar, and tooled to match existing joints. Immediately after grout work is completed, scum and stains which have percolated through the masonry work shall be removed using a high pressure stream of water and a stiff bristled brush. Masonry surfaces shall not be cleaned, other than removing excess surface mortar, until mortar in joints has hardened. Masonry surfaces shall be left clean, free of mortar daubs, dirt, stain, and discoloration, including scum from cleaning operations, and with tight mortar joints throughout. Metal tools and metal brushes shall not be used for cleaning.

3.14.1 Concrete Masonry Unit and Concrete Brick Surfaces

Exposed concrete masonry unit and concrete brick surfaces shall be dry-brushed at the end of each day's work and after any required pointing, using stiff-fiber bristled brushes.

3.14.2 Clay or Shale Brick Surfaces

Exposed clay or shale brick masonry surfaces shall be cleaned as necessary to obtain surfaces free of stain, dirt, mortar and grout daubs, efflorescence, and discoloration or scum from cleaning operations. After cleaning, the sample panel of similar material shall be examined for discoloration or stain as a result of cleaning. If the sample panel is discolored or stained, the method of cleaning shall be changed to assure that the masonry surfaces in the structure will not be adversely affected. The exposed masonry surfaces shall be water-soaked and then cleaned with a solution proportioned 1/2 cup trisodium phosphate and 1/2 cup laundry detergent to one gallon of water or cleaned with a proprietary masonry

cleaning agent specifically recommended for the color and texture by the clay products manufacturer. The solution shall be applied with stiff fiber brushes, followed immediately by thorough rinsing with clean water. Proprietary cleaning agents shall be used in conformance with the cleaning product manufacturer's printed recommendations. Efflorescence shall be removed in conformance with the brick manufacturer's recommendations.

3.15 BEARING PLATES

Bearing plates for beams, joists, joist girders and similar structural members shall be set to the proper line and elevation with damp-pack bedding mortar, except where non-shrink grout is indicated. Bedding mortar and non-shrink grout shall be as specified in Section 03300 CAST-IN-PLACE STRUCTURAL CONCRETE.

3.16 PROTECTION

Facing materials shall be protected against staining. Top of walls shall be covered with nonstaining waterproof covering or membrane when work is not in progress. Covering of the top of the unfinished walls shall continue until the wall is waterproofed with a complete roof or parapet system. Covering shall extend a minimum of 2 feet down on each side of the wall and shall be held securely in place. Before starting or resuming, top surface of masonry in place shall be cleaned of loose mortar and foreign material.

3.17 TEST REPORTS

3.17.1 Field Testing of Mortar

At least three specimens of mortar shall be taken each day. A layer of mortar 1/2 to 5/8 inch thick shall be spread on the masonry units and allowed to stand for one minute. The specimens shall then be prepared and tested for compressive strength in accordance with ASTM C 780.

3.17.2 Field Testing of Grout

Field sampling and testing of grout shall be in accordance with the applicable provisions of ASTM C 1019. A minimum of three specimens of grout per day shall be sampled and tested. Each specimen shall have a minimum ultimate compressive strength of 2000 psi at 28 days.

3.17.3 Efflorescence Test

Brick which will be exposed to weathering shall be tested for efflorescence. Tests shall be scheduled far enough in advance of starting masonry work to permit retesting if necessary. Sampling and testing shall conform to the applicable provisions of ASTM C 67. Units meeting the definition of "effloresced" will be subject to rejection.

3.17.4 Prism Tests

At least one prism test sample shall be made for each 5,000 square feet of wall but not less than three such samples shall be made for any building. Three prisms shall be used in each sample. Prisms shall be tested in accordance with ASTM E 447. Seven-day tests may be used provided the relationship between the 7- and 28-day strengths of the masonry is established by the tests of the materials used. Compressive strength shall not be less than 1500 psi at 28 days. If the compressive strength of any

prism falls below the specified value by more than 500 psi, steps shall be taken to assure that the load-carrying capacity of the structure is not jeopardized. If the likelihood of low-strength masonry is confirmed and computations indicate that the load-carrying capacity may have been significantly reduced, tests of cores drilled, or prisms sawed, from the area in question may be required. In such case, three specimens shall be taken for each prism test more than 500 psi below the specified value. Masonry in the area in question shall be considered structurally adequate if the average compressive strength of three specimens is equal to at least 85 percent of the specified value, and if the compressive strength of no single specimen is less than 75 percent of the specified value. Additional testing of specimens extracted from locations represented by erratic core or prism strength test results shall be permitted.

-- End of Section --

SECTION 04220

NONBEARING MASONRY VENEER/STEEL STUD WALLS
05/01

PART 1 GENERAL

1.1 REFERENCES

The publications listed below form a part of this specification to the extent referenced. The publications are referred to in the text by the basic designation only.

AMERICAN INSTITUTE OF STEEL CONSTRUCTION (AISC)

AISC ASD Manual	(1989) Manual of Steel Construction Allowable Stress Design

AMERICAN IRON AND STEEL INSTITUTE (AISI)

AISI Cold-Formed Mnl	(1996) Cold-Formed Steel Design Manual

AMERICAN SOCIETY FOR TESTING AND MATERIALS (ASTM)

ASTM A 36/A 36M	(2000) Carbon Structural Steel
ASTM A 82	(1997a) Steel Wire, Plain, for Concrete Reinforcement
ASTM A 123/A 123M	(2000) Zinc (Hot-Dip Galvanized) Coatings on Iron and Steel Products
ASTM A 153/A 153M	(2000) Zinc Coating (Hot-Dip) on Iron and Steel Hardware
ASTM A 653/A 653M	(2000) Steel Sheet, Zinc-Coated (Galvanized) or Zinc-Iron Alloy-Coated (Galvannealed) by the Hot-Dip Process
ASTM C 67	(2000) Sampling and Testing Brick and Structural Clay Tile
ASTM C 79/C 79M	(2000) Treated Core and Nontreated Core Gypsum Sheathing Board
ASTM C 91	(1999) Masonry Cement
ASTM C 216	(2000) Facing Brick (Solid Masonry Units Made from Clay or Shale)
ASTM C 270	(2000) Mortar for Unit Masonry
ASTM C 494/C 494M	(1999a) Chemical Admixtures for Concrete
ASTM C 665	(1998) Mineral-Fiber Blanket Thermal Insulation for Light Frame Construction and Manufactured Housing

ASTM C 780	(2000) Preconstruction and Construction Evaluation of Mortars for Plain and Reinforced Unit Masonry
ASTM C 955	(2000a) Load-Bearing (Transverse and Axial) Steel Studs, Runners (Tracks), and Bracing or Bridging for Screw Application of Gypsum Panel Products and Metal Plaster Bases
ASTM C 1002	(2000) Steel Drill Screws for the Application of Gypsum Panel Products or Metal Plaster Bases
ASTM C 1072	(2000) Measurement of Masonry Flexural Bond Strength
ASTM C 1177/C 1177M	(1999) Glass Mat Gypsum Substrate for Use as Sheathing
ASTM D 226	(1997a) Asphalt-Saturated Organic Felt Used in Roofing and Waterproofing
ASTM D 1330	(1985; R 1995el) Rubber Sheet Gaskets
ASTM D 2103	(1997) Polyethylene Film and Sheeting
ASTM E 84	Standard Test Method for Surface Burning Characteristics of Building Materials

AMERICAN SOCIETY OF HEATING, REFRIGERATING AND AIR-CONDITIONING ENGINEERS (ASHRAE)

ASHRAE Hdbk-IP	(1997) Handbook, Fundamentals I-P Edition

AMERICAN WELDING SOCIETY (AWS)

AWS D1.3	(1998) Structural Welding Code - Sheet Steel

1.2 SUBMITTALS

Government approval is required for submittals with a "G" designation; submittals not having a "G" designation are for information only. When used, a designation following the "G" designation identifies the office that will review the submittal for the Government. The following shall be submitted in accordance with Section 01330 SUBMITTAL PROCEDURES:

SD-02 Shop Drawings

Detail Drawings; G

Details of cold-formed steel framing and support around openings, including framing connections, steel lintels, steel shelf angles, attachment to other building elements and bridging. Drawings shall indicate thickness, material, dimensions, protective coatings, and section properties of all steel lintels and shelf angles used in exterior wall framing. Drawings shall

also indicate size and type of all fasteners including size and type of all welds.

SD-04 Samples

Expansion Joint Materials
Clay or Shale Brick (Face Brick); G
Sample Panel; G

A portable panel, approximately 2 by 2 feet, containing approximately 24 brick facings to establish the range of color and texture. One of each type of masonry veneer anchor used.

SD-06 Test Reports

Masonry Veneer/Steel Stud Wall System; G

Calculations demonstrating the structural adequacy of steel lintels and shelf angles for the calculated gravity loads being supported; this analysis shall be in accordance with AISC ASD Manual. Test results demonstrating that the veneer anchors are structurally adequate to resist the specified loadings shall be submitted for approval. Calculations demonstrating the insulation shown on the drawings provides the specified U-value for heat transmission of the completed exterior wall construction; this analysis shall be in accordance with ASHRAE Hdbk-IP. Manufacturer's descriptive data and installation instructions for the insulation, the vapor barrier and the moisture barrier.

SD-07 Certificates

Clay or Shale Brick (Face Brick)
Joint Reinforcement
Expansion Joint Materials
Insulation
Exterior Sheathing
Moisture Barrier
Vapor Retarder
Veneer Anchors
Welding

Certificates stating that the materials and welders meet the requirements specified. Each certificate shall be signed by an authorized certification official and shall include their organization and position and shall identify the products covered under their certifying signature.

1.3 SAMPLE PANEL

After the material samples are approved and prior to starting masonry work, a sample masonry panel shall be built on the project site where directed. The sample panel shall be not less than 6 feet long by 4 feet high excluding the precast concrete plinth. The panel shall be of typical wall thickness for the construction represented. The panel shall show color range, texture, bond pattern, expansion joints, and cleaning of the masonry as required in the work. The panel shall also show cold-formed steel framing, insulation, gypsum wallboard, gypsum sheathing, moisture barrier, vapor barrier, veneer anchors, joint reinforcement, steel shelf angles, flashing and weep holes. The approved sample panel shall be used as a

standard of workmanship required in the actual installation. The sample panel shall be protected from weather and construction operations and shall not be removed until the masonry veneer/steel stud wall work has been completed and accepted. The panel shall be constructed with a precast concrete plinth as specified in Section 03413.

1.4 DELIVERY, HANDLING AND STORAGE

Materials shall be delivered and handled avoiding chipping, breakage, bending or other damage, and contact with soil or other contaminating materials. The masonry products shall be stored off the ground and protected from inclement weather. Cementitious materials shall be delivered in unopened containers plainly marked and labeled with manufacturer's names and brands. Cementitious materials shall be stored in dry, weather-tight enclosures or covers. Sand and other aggregates shall be stored preventing contamination or segregation and under a weather-tight covering permitting good air circulation. Finish of the framing members shall be maintained at all times, using an approved high zinc dust content galvanizing repair paint whenever necessary to prevent the formation of rust. Insulation, moisture barrier, and gypsum sheathing shall be stored in dry, well ventilated, weather-tight areas protected from sunlight and excessive heat. Air infiltration type vapor barrier shall be stored in accordance with the manufacturer's recommendations.

1.5 EFFLORESCENCE TESTS

Efflorescence tests shall be performed by an approved commercial testing laboratory. Sampling for the tests shall be the responsibility of the Contractor. Brick shall be sampled and tested for efflorescence in accordance with ASTM C 67 and the rating shall be: "not effloresced".

PART 2 PRODUCTS

2.1 VENEER WYTHE

The source of masonry materials which will affect the appearance of the finished work shall not be changed after the work has started except with the Contracting Officer's approval.

2.1.1 Clay or Shale Brick (Face Brick)

Clay or shale brick veneer shall be masonry units conforming to ASTM C 216, the type/design as manufactured by (or equal to similar masonry buildings color, size and texture on base):

Lawrence Brick
Brick and Tile Corporation of Lawrenceville
P.O. Box 45
Lawrenceville, Virginia 23868
1-800-848-3151

2.1.2 Face Brick Style

a. Flight Kitchen Facility
   (1) Smooth Face
   (2) Type FBS
   (3) Modular Standard
   (4) Stock Number: 1-111A

2.2 CAST STONE

Reference Section 04720, "Cast Stone" for exterior masonry wall ornamental units, screen wall caps and window sills/lintels.

2.3 MORTAR

Mortar shall conform to ASTM C 270, Type S. Mortar mix shall be based on proportion specifications. Laboratory testing of mortar shall be in accordance with the preconstruction evaluation of mortar section of ASTM C 780. Cement shall have a low alkali content and be of one brand. Aggregates shall be from one source.

2.3.1 Mortar Coloring

Mortar coloring shall be added to the mortar used for exposed masonry surfaces to produce a uniform color for all face brick shall match Lehigh 00024 by Batchelder and Collins and made with Chickamoniny sand (or approved equal). Mortar coloring shall not exceed 3 percent of the weight of cement for carbon black and ten percent of the weight of cement for all other pigments. Mortar coloring shall be chemically inert, of finely ground limeproof pigment, and furnished in accurately pre-measured and packaged units that can be added to a measured amount of cement.

2.3.2 Masonry Cement

Masonry cement in conformance with ASTM C 91 may be used in the mortar. When using a masonry cement a comparative test shall be performed between a Portland cement-lime mortar and the masonry cement mortar proposed for the project to evaluate the ASTM C 1072 bond and the ASTM C 780 compressive strength of the two mixes. The test shall be conducted with the proposed masonry units for the project. The masonry cement mortar will be acceptable if the bond and compressive strength values are equal to or higher than the portland cement-lime mix. The air-content of the masonry cement shall be limited to 12 percent maximum.

2.3.3 Admixtures

In cold weather, a non-chloride based accelerating admixture may be used subject to approval. Accelerating admixtures shall be non-corrosive, contain less than 0.2 percent chlorides, and conform to ASTM C 494/C 494M, Type C.

2.4 JOINT REINFORCEMENT

Joint reinforcement shall be of steel wire conforming to ASTM A 82. Fabrication shall be by welding. Tack welding will not be permitted. Reinforcement shall be zinc-coated after fabrication in accordance with ASTM A 153/A 153M, Class B-2. Joint reinforcement shall consist of at least 1 continuous longitudinal wire in the veneer wythe. Minimum wire cross section shall be 0.017 square inches.

2.5 COLD-FORMED STEEL FRAMING

Cold-formed framing shall consist of steel studs, top and bottom tracks, runners, horizontal bridging, and other cold-formed members and other accessories. All members and components made of sheet steel shall be hot-dip galvanized in accordance with ASTM A 653/A 653M with a minimum coating thickness of G 60. Framing covered herein shall be used only in

framing the exterior masonry veneer steel stud wall system as indicated on the detail drawings. Metal framing for interior partitions are specified in Section 09250 GYPSUM WALLBOARD.

2.5.1 Steel Studs

Studs shall be furnished as shown in the contract drawings.

2.5.2 Runners, Tracks, Bridging and Accessories

Cold-formed steel sheet framing members, components, and accessories, other than the steel studs, shall conform to ASTM C 955 and be of steel conforming to ASTM A 653/A 653M, Grade 33, having a minimum yield strength of 33,000 psi, except that members with minimum base metal thickness of 0.054 inch or greater shall be of steel conforming to ASTM A 653/A 653M, Grade 50, having a minimum yield strength of 50,000 psi.

2.6 INSULATION

Recyclable materials shall conform to EPA requirements in accordance with Section 01670 RECYCLED / RECOVERED MATERIALS.

2.6.1 Blanket Insulation

Insulation placed between the steel studs shall be glass fiber batts, Type II kraft faced insulation, Class A conforming toASTM C 665. Insulation shall have a UL rating of 25 and a smoke developed rating of 150 or less when tested in accordance with ASTM E 84.

2.7 GYPSUM WALLBOARD

Gypsum wallboard that is installed on the interior side of the cold-formed steel framing system shall be as specified in Section 09250 GYPSUM WALLBOARD.

2.8 EXTERIOR SHEATHING

Gypsum sheathing that is installed on the exterior side of the cold-formed steel framing system shall have a minimum thickness of 5/8 inch and shall be 4 feet wide. Glass mat gypsum sheathing shall conform to ASTM C 79/C 79M and ASTM C 1177/C 1177M. Glass mat gypsum sheathing shall have a water-resistant core with a water-resistant glass mat embedded onto core and shall have a zero flame, zero smoke developed, and shall have mold and mildew resistant surface.

2.9 MOISTURE PROTECTION

2.9.1 Moisture Barrier

The moisture barrier shall be 15-lb asphalt-saturated felt conforming to ASTM D 226 Type I (No. 15).

2.9.2 Vapor Retarder

The vapor retarder shall be polyethylene film conforming to ASTM D 2103, 6 mil minimum thickness.

2.9.3 Staples

Staples for attaching the moisture barrier to the exterior sheathing shall be the type and size best suited to provide a secure connection. Staples shall be made from either galvanized steel or stainless steel wire.

2.9.4 Joint Tape

Tape for sealing the joints in the vapor retarder shall be laminated tape with pressure sensitive adhesive as recommended by the manufacturer of the polyethylene film.

2.10 VENEER ANCHORS

Anchor assemblies for the attachment of the masonry veneer to the cold-formed steel framing, structural steel beam, tubes, and column members, and concrete floor slabs as shown. Anchors shall transfer the design loadings from the masonry veneer to the cold-formed steel framing system or other support without exceeding the allowable stresses and deflections in the anchors. Length of anchor wires shall be such that the outermost wires lie between 1-1/4 inch from each face of the masonry veneer. Anchors wires shall not have drips. Wires for veneer anchors shall be rectangular or triangular hoops formed from 3/16 inch diameter steel wire conforming to ASTM A 82. Anchor assemblies including wires and anchor plates shall be hot-dip galvanized conforming to ASTM A 153/A 153M, Class B-2. The veneer anchor shall have a minimum capacity of 200 pounds. The load-displacement capacity of each veneer anchor, both in direct pull-out for tension and compression, shall be not less than 2000 pounds per inch (or a deflection of 0.05 inches per 100 pounds of load in tension or compression). In the direction perpendicular to the masonry veneer, the anchor assembly shall have a maximum play of 1/16 inch.

2.10.1 Adjustable Pintle-Eye Type Wire Anchors

Adjustable pintle-eye type wall anchors shall be two pieces rectangular type double pintle anchors.

2.11 CONNECTIONS

Screws, bolts and anchors shall be hot-dip galvanized in accordance with ASTM A 123/A 123M or ASTM A 153/A 153M as appropriate.

2.11.1 Framing Screws, Bolts and Anchors

Screws, bolts and anchors used in the assembly of the cold-formed steel framing system shall be as required by design of the framing system for the specified loading. Screw, bolt and anchor sizes shall be shown on the detail drawings.

2.11.2 Welding

Welded connections shall be designed and all welding shall be performed in accordance with AWS D1.3, as modified by AISI Cold-Formed Mnl. Welders shall be qualified in accordance with AWS D1.3. All welds shall be cleaned and touched-up with zinc-rich paint.

2.11.3 Veneer Anchor Screws

Screws for attachment of the veneer anchors to the cold-formed steel framing members shall be as required by design to provide the needed pullout load capacity but not less than No. 12. Screws shall be shown on

the detail drawings. The length of screws shall be such that the screws penetrate the holding member by not less than 5/8 inch.

2.11.4 Gypsum Sheathing Screws

Screws for attachment of gypsum sheathing to cold-formed steel framing shall conform to ASTM C 1002, Type S.

2.12 SYNTHETIC RUBBER WASHERS

Synthetic rubber washers for placement between veneer anchors and the moisture barrier on the outside face of the exterior sheathing shall conform to ASTM D 1330, Grade I.

2.13 FLASHING

Copper or stainless steel flashing shall conform to the requirements in Section 07600 SHEET METALWORK, GENERAL. Flashing shall be supplied in a continuous sheet extending from the exterior sheathing across the cavity and through the masonry veneer as shown.

2.14 STEEL LINTELS AND SHELF ANGLES

Steel shapes used for lintels and shelf angles shall conform to ASTM A 36/A 36M. Lintels and shelf angles shall be provided as shown. These steel members shall be hot-dip galvanized in accordance with ASTM A 123/A 123M.

2.15 CAULKING AND SEALANTS

Caulking and sealants shall be as specified in Section 07900 JOINT SEALING.

2.16 WEEP HOLE VENTILATORS

Weephole ventilators shall be prefabricated aluminum grill type vents designed to prevent insect entry with maximum air entry. Ventilators shall be sized to match modular construction with a standard 3/8-inch mortar joint.

PART 3 EXECUTION

3.1 GENERAL INSTALLATION REQUIREMENTS

Masonry Veneer/Steel Stud Wall System, wall sections, types of construction and dimensions shall be as shown and by the approved masonry Sample Panel and Detail Drawings. Metal door and window frames and other special framing shall be built and anchored into the wall system as indicated.

3.2 STEEL STUD WALL FRAMING

The top track of the stud wall system shall be slip jointed to accommodate vertical deflections of the supporting members as shown on the drawings. Bottom tracks shall be anchored by one anchor at each stud location as shown on the drawings. Both flanges of all steel studs shall be securely fastened with screws to the flanges of the top and bottom tracks as shown on the drawings. All details for affixing steel studs to runners and all other sheet steel framing members along with all details necessary for anchorage of the steel stud wall system to the building structural systems shall be as shown on the drawings. Horizontal bridging shall be provided as necessary. Studs shall be spaced 16 inches on center unless as

indicated otherwise on the drawings. Coordinate stud spacing with sheathing and anchor requirements. At wall openings for doors, windows and other similar features, the framing system shall provide for the installation and anchorage of the required subframes or finish frames. Steel frames shall be securely attached through built-in anchors to the nearest stud on each side of the opening with self-drilling screws. Double studs shall be provided at both jambs of all door openings. Door frames and other built-in items shall be grouted solid.

3.3 STEEL SHELF ANGLES

Unless otherwise shown, steel shelf angles shall be provided in segments that do not exceed 10 feet in length. At building corners, shelf angle segments shall be mitered and securely attached together by welding with legs no less than 4 feet where possible. Shelf angle segments shall not be connected together but instead shall be installed with 1/4 inch wide gaps between the segments. Fabrication and erection tolerances shall be in accordance with the AISC Code of Standard Practice, as indicated in AISC ASD Manual.

3.4 INSULATION

The actual installed thickness of insulation shall provide a minimum thermal R of 19 for the completed exterior wall construction as determined in accordance with ASHRAE Hdbk-IP. Insulation thickness shall be as shown on the approved drawings. Installation, except as otherwise specified or shown, shall be in accordance with the manufacturer's instructions which shall be approved by the Contracting Officer. Insulation shall be installed between wall framing members. Rigid insulation shall be installed in accordance with the manufacturer's instructions with proper connections through the insulation to prevent the insulation from carrying loads directly. Insulation with facings shall be secured to the sides of the framing members to provide a continuous seal so that the entire weight of the insulation is carried by the framing members. Where electrical outlets, ducts, pipes, vents or other utility items occur, insulation shall be placed on the dry side of the item away from excessive humidity.

3.5 GYPSUM WALLBOARD

Gypsum wallboard shall be installed on the interior face of the cold-formed steel framing system. Installation shall be as specified in Section 09250 GYPSUM WALLBOARD except at vertical slip joints, the gypsum wallboard shall be connected to the vertical studs to prevent movement at the slip joint.

3.6 EXTERIOR SHEATHING

Sheathing shall be installed on the exterior face of the cold-formed steel framing system with self-drilling screws. Screws shall be located a minimum of 3/8 inch from the ends and edges of sheathing panels and shall be spaced not more than 8 inches on each supporting member except at vertical slip joints, the sheathing shall be connected to the vertical studs to prevent movement of the slip joint. Edges and ends of gypsum sheathing panels shall be butted snugly with vertical joints staggered to provide full and even support for the moisture barrier. Holes and gaps resulting from abandoned screw installations, from damage to panels, and from cutting and fitting of panels at junctures with doors, windows, foundation walls, floor slabs and other similar locations shall be filled with exterior rubber-base caulk.

3.7 MOISTURE PROTECTION

3.7.1 Moisture Barrier

The asphalt-saturated felt or other approved moisture barrier shall be installed on the outer face of the exterior sheathing. The moisture barrier shall be installed horizontally and shingled with each sheet lapped not less than 6 inches over the sheet below. Vertical end joints shall be lapped not less than 6 inches and shall be staggered. Attachment of the moisture barrier shall be with staples spaced not greater than 16 inches on center or as required by the manufacturer.

3.7.2 Vapor Retarder

A vapor retarder shall be installed between the steel studs and the gypsum wall board. The vapor retarder shall be installed in accordance with the manufacturer's recommendations to form a complete retarder to vapor infiltration. The joints shall be lapped and sealed with tape.

3.8 VENEER ANCHORS

Veneer anchors shall be attached with screws through the sheathing and rigid insulation to the steel studs or other support members at the locations shown. When rigid insulation is used, the method of connecting the veneer anchor through the insulation shall be approved by the Contracting Officer. Veneer anchors shall be installed with the outermost wires lying between 5/8 inch from each face of the masonry veneer. Synthetic rubber washers shall be used between the anchor connector plates and the moisture barrier. A clutch torque slip screw gun shall be used on screws attaching veneer anchors to cold-formed steel members. Veneer anchors with corrugated sheet metal or wire mesh members extending across the wall cavity shall not be used. There shall be one veneer anchor for each 1.8 square feet of wall and shall be attached to steel studs and other supports with a maximum spacing of 16 inches on center. For pintle-eye anchors the vertical distance between the pintle section horizontal wires and the eye section horizontal wires shall not exceed 1/2 inch.

3.9 FLASHING

Continuous flashing shall be provided at the bottom of the wall cavity just above grade. Flashing shall also be provided above and below openings at lintels and sills, at shelf angles, and as indicated on the drawings. Flashing shall be as detailed and as specified in Section 07600 SHEET METALWORK, GENERAL. Flashing shall be lapped a minimum of 6 inches at joints and shall be sealed with a mastic as recommended by the flashing manufacturer. Ends over doors, windows and openings shall be turned up and secured. Flashing shall be lapped under the moisture barrier a minimum of 6 inches and securely attached to the gypsum sheathing. Flashing shall extend through the exterior face of the masonry veneer and shall be turned down to form a drip.

3.10 MASONRY VENEER

Exterior masonry wythes shall be constructed to the thickness indicated on the drawings. Masonry veneer shall not be installed until the exterior sheathing, moisture barrier, veneer anchors and flashing have been installed on the cold-formed steel framing system. Extreme care shall be taken to avoid damage to the moisture barrier and flashing during construction of the masonry veneer. Any portion of the moisture barrier

and flashing that is damaged shall be repaired or replaced prior to completion of the veneer. Masonry shall be placed in running bond pattern except for the soldier course pattern as indicated on the drawings. Longitudinal reinforcement consisting of at least one continuous galvanized steel wire shall be placed in the veneer wythe. The minimum wire size shall be 9 gauge. Vertical joints on alternating courses shall be aligned and kept vertically plumb. Solid masonry units shall be laid in a non-furrowed full bed of mortar, beveled and sloped toward the center of the wythe on which the mortar is placed. Units shall be shoved into place so that the vertical mortar joints are completely full and tight. Units that have been disturbed after the mortar has stiffened shall be removed, cleaned and relaid. Mortar which protrudes more than 1/2 inch into the cavity space shall be removed. Means shall be provided to ensure that the cavity space is kept clean of mortar droppings and other loose debris. Chases and raked-out joints shall be kept free from mortar and debris. Faces of units used in finished exposed areas shall be free from chipped edges, material texture or color defects or other imperfections distracting from the appearance of the finished work.

3.10.1 Surface Preparation

Surfaces on which masonry is to be laid shall be cleaned of laitance or other foreign material. No units having a film of water shall be laid.

3.10.2 Hot Weather Construction

Temperatures of masonry units and mortar shall not be greater than 120 degrees F when laid. Masonry erected when the ambient air temperature is more than 99 degrees F in the shade and when the relative humidity is less than 50 percent shall be given protection from the direct exposure to wind and sun for 48 hours after the installation.

3.10.3 Cold Weather Construction

Temperatures of masonry units and mortar shall not be less than 40 degrees F when laid. When the ambient air temperature is 32 degrees F or less, masonry veneer under construction shall be protected and maintained at a temperature greater than 32 degrees F for a period of 48 hours after installation. The proposed method of maintaining the temperature within the specified range shall be submitted for approval prior to implementation. No units shall be laid on a surface having a film of frost or water.

3.10.4 Tolerances

Masonry shall be laid plumb, level and true to line within the tolerances specified in TABLE 1. All masonry corners shall be square unless otherwise indicated on the drawings.

TABLE 1

Variation From Plumb	
In adjacent units	1/8 inch
In 10 feet	1/4 inch
In 20 feet	3/8 inch
In 40 feet or more	1/2 inch

Variation From Level Or Grades	
In 10 feet	1/8 inch
In 20 feet	1/4 inch
In 40 feet or more	1/2 inch

Variation From Linear Building Lines	
In 20 feet	1/2 inch
In 40 feet or more	3/4 inch

Variation From Cross Sectional Dimensions Of Walls	
Plus	1/2 inch
Minus	1/4 inch

3.10.5 Mixing of Mortar

Mortar shall be mixed in a mechanically operated mortar mixer for at least 3 minutes but not more than 5 minutes. Measurement of ingredients for mortar shall be by volume. Measurement of sand shall be accomplished by the use of a container of known capacity or shovel count based on a container of known capacity. Water shall be mixed with the dry ingredients in sufficient amount to provide a workable mixture which will adhere to the vertical surfaces of the masonry units. Mortar that has stiffened because of loss of water through evaporation shall be retempered by adding water to restore the proper consistency and workability. Mortar that has reached its initial set or that has not been used within 2-1/2 hours shall be discarded.

3.10.6 Cutting and Fitting

Wherever possible, full units shall be used in lieu of cut units. Where cut units are required to accommodate the design, cutting shall be done by masonry mechanics using power masonry saws. Wet-cut units shall be dried to the same surface-dry appearances of uncut units before being placed in the work. Cut edges shall be clean, true and sharp. Openings to accommodate pipes, conduits, and other accessories shall be neatly formed so that framing or escutcheons required will completely conceal the cut edges. Insofar as practicable, all cutting and fitting shall be accomplished while masonry work is being erected.

3.10.7 Masonry Units

When being laid, masonry units shall have suction sufficient to hold the mortar and to absorb water from the mortar, but shall be damp enough to allow the mortar to remain in a plastic state to permit the unit to be leveled and plumbed immediately after being laid without destroying bond. Masonry units with frogging shall be laid with the frog side down and better or face side exposed to view. Masonry units that are cored, recessed or otherwise deformed may be used in sills or in other areas except where deformations will be exposed to view.

3.10.8 Mortar Joints

Mortar joint widths shall be uniform and such that the specified widths are maintained throughout. Joints shall be of thickness equal to the difference between the actual and nominal dimensions of the masonry units in either height or length but in no case shall the joints be less than 1/4 inch nor more than 1/2 inch wide. Joints shall be tooled slightly concave. Tooling shall be accomplished when mortar is thumbprint hard and in a manner that will compress and seal the mortar joint and produce joints of straight and true lines free of tool marks.

3.10.9 Joint Reinforcement

Unless otherwise shown, joint reinforcement shall be spaced at 16 inches on center vertically. Joint reinforcement shall not be placed in the same masonry course as veneer anchors unless the anchors are designed to accommodate the wire. Joint reinforcement shall be placed so that longitudinal wires are centered in the veneer wythe for solid units. Longitudinal wires shall be fully embedded in mortar for their entire length. Splices in joint reinforcement shall be lapped a minimum of 6 inches. Joint reinforcement must be discontinuous at all veneer joints. The minimum cover for joint reinforcement is 5/8 inches.

3.10.10 Veneer Joints

Brick expansion joints shall be provided at the locations shown on the drawings. Details of joints shall be as indicated on the drawings. Joints shall be clean and free of mortar and shall contain only backer rod and sealant, installed in accordance with Section 07900 JOINT SEALING. Horizontal reinforcement shall not extend through the joints.

3.10.11 Weep Holes

Weep holes shall be provided at all flashing locations at intervals of 24 inches. Weep holes shall be placed in head joints just above the flashing. Weep holes shall be formed by leaving head joints open or head joint vents may be used. Weep holes shall be kept free of mortar and other obstructions.

3.10.12 Head Joint Vents

Head joint vents shall be provided near the top of the veneer wythe at the same spacing as the weep holes.

3.10.13 Discontinuous Work

When necessary to temporarily discontinue the work, masonry shall be stepped back for joining when work resumes. Toothing may be used only when specifically approved. Before resuming work, loose mortar shall be removed and the exposed joint shall be thoroughly cleaned. Top of walls subjected to rain or snow shall be covered with nonstaining waterproof covering or membrane when work is not in process. Covering shall extend a minimum of 2 feet down on each side of the wall and shall be held securely in place.

3.10.14 Cleaning

Mortar daubs or splashings shall be completely removed from finished exposed masonry surfaces before they harden or set up. Before completion of the work, defects in mortar joints shall be raked out as necessary, filled with mortar, and tooled to match the adjacent existing mortar in the joints. The proposed cleaning method shall be done on the sample wall

panel and the sample panel shall be examined for discoloration or stain. If the sample panel is discolored or stained, the method of cleaning shall be changed to ensure that the masonry surfaces in the structure will not be adversely affected. Masonry surfaces shall not be cleaned, other than removing excess surface mortar, until mortar in joints has hardened. Cleaning shall be accomplished with the use of stiff bristle fiber brushes, wooden paddles, wooden scrapers, or other suitable nonmetallic tools. The exposed brick surfaces shall be saturated with water and cleaned with a proprietary brick cleaning agent recommended by the clay products manufacturer. The cleaning agent shall not adversely affect the brick masonry surfaces. Proprietary cleaning agents shall be used in conformance with the cleaning product manufacturer's printed recommendations. Efflorescence or other stains shall be removed in conformance with the recommendations of the masonry unit manufacturer. After construction and cleaning, masonry surfaces shall be left clean, free of mortar daubs, stain, and discolorations, including scum from cleaning operations, and will have tight mortar joints throughout. Metallic tools and brushes shall not be used for cleaning.

3.11 BUILDING EXPANSION JOINTS

Expansion Joint Materials as specified in Section 04000 shall be located where indicated and shall be of the size and details shown.

-- End of Section --

SECTION 04720

CAST STONE
09/99

PART 1 GENERAL

1.1 REFERENCES

The publications listed below form a part of this specification to the extent referenced. The publications are referred to in the text by the basic designation only.

AMERICAN SOCIETY FOR TESTING AND MATERIALS (ASTM)

ACI 318	Building Code Requirements for Reinforced Concrete
ASTM A 185	(1991) Steel Welded Wire Fabric, Plain, for Concrete Reinforcement
ASTM A 615/A 615M	(1996)Deformed and Plain Billet-Steel Bars for Concrete Reinforcement
ASTM C 33	(1997) Concrete Aggregates
ASTM C 150	(1997) Portland Cement
ASTM C 270	(1997) Mortar for Unit Masonry
ASTM C 494	(1992) Chemical Admixtures for Concrete
ASTM C 642	Test Method for Specific Gravity, Absorption, and Voids in Hardened Concrete
ASTM C 979	Standard Specification for Pigments for Integrally Colored Concrete
ASTM C 1194	Test Method for Compressive Strength of Architectural Cast Stone
ASTM C 1195	Test Method for Absorption of Architectural Cast Stone
ASTM C 1364	Specification for Architectural Cast Stone
ASTM D 2244	Test Method for Calculation of Color Differences From Instrumentally Measured Color Coordinates

1.2 CONTRACTOR'S OPTION

Contractor has the option to provide and install precast concrete shapes for the cast stone components specified and shown on the drawings. Precast components shall match precast plinth texture, finish and color.

1.3 SYSTEM DESCRIPTION

Cast Stone is a highly refined architectural concrete stone product manufactured to simulate fine grain texture of natural stone. The casting method shall be Vibrant Dry Tamp (VDT), vibratory ramming of damp, zero-slump concrete against rigid form work until it is densely compacted and ready for immediate removal from form. Reference Section 04200, Masonry and Section 07900, Joint Sealing for related sections.

1.4 SUBMITTALS

Submit the following in accordance with Section 01330, "Submittal Procedures."

SD-03 Product Data

Test results of cast stone components made previously by manufacturer.

SD-02 Shop Drawings

Shop Drawings; G

Include profiles, cross sections, reinforcement, exposed faces, arrangement of joints, anchoring methods, anchors, annotation of components, and their locations in project.

SD-04 Samples

Samples; G

Provide three different pieces of actual cast stone components, 12 inches square, illustrating the range of color matching the split block units furnished for each project. The units shall have a smooth texture similar to cut stone. Upon approval color and texture, provide sample to be installed in sample masonry walls that shall not remain as part of the completed work.

1.5 QUALITY ASSURANCE

Manufacturer shall be a current producer member of Cast Stone Institute, with a minimum of 5 years of experience in producing cast stone of types required for project.

1.6 DELIVERY, STORAGE, AND HANDLING

a. Deliver cast stone components secured to shipping pallets and protected from damage and discoloration, protect corners from damage and number each piece individually to match shop drawings and schedules.

b. Store cast stone components and installation materials in accordance with manufacturer's instructions on pallets with non-staining, waterproof covers, ventilate under covers to prevent condensation and prevent contact with dirt.

c. During handling, protect cast stone components during handling and installation to prevent chipping, cracking, or other damage.

PART 2 PRODUCTS

2.1 GENERAL REQUIREMENTS

Provide cast stone units complying with ASTM C 1364. Casting Method shall be (or equal), Vibrant Dry Tamp. Units shall have a Compressive Strength per ASTM C 1194 of 6,500 psi minimum at 28 days and absorption per ASTM C 642 or ASTM C 1195 of 6 percent maximum at 28 days.

The units shall have a fine-grained texture, similar to natural stone with no bug holes, air voids, or other surface blemishes. Maximum color variation per ASTM D 2244 of 2 percent hue; 6 percent lightness, chroma, and hue combined.

2.1.1 CAST STONE MATERIALS

a. Portland Cement: ASTM C 150, Type I, white or gray as required to match sample.

b. Coarse Aggregate: ASTM C 33, except for gradation; granite, quartz, or limestone.

c. Fine Aggregate: ASTM C 33, except for gradation; natural or manufactured sands.

d. Pigments: ASTM C 979, inorganic iron oxides.

e. Admixtures: ASTM C 494.

f. Water: Potable.

2.1.2 Reinforcing

All reinforcing bars and mesh in cast stone components are either galvanized or epoxy coated.

a. Bars: ASTM A 615/A 615M, galvanized or epoxy coated.

b. Mesh: ASTM A 185, galvanized or epoxy coated.

2.1.3 MORTAR MATERIALS

a. Mortar: ASTM C 270, Type N.

2.1.4 ACCESSORIES

a. Anchors: Non-corrosive type, sized for conditions, Type 304 stainless steel.

b. Sealant: As specified in Section 07900.

c. Cleaner:

(1) Manufacturer's standard-strength, general-purpose cleaner designed for removing mortar and grout stains, efflorescence, and other construction stains from new masonry surfaces without discoloring or damaging masonry surfaces.

(2) Expressly approved for intended use by cast stone manufacturer and expressly approved by cleaner manufacturer for use on cast stone and adjacent masonry materials.

2.2 FABRICATION

a. Shapes: Unless otherwise indicated on drawings, provide:

(1) Suitable wash on exterior sills, copings, projecting courses, and components with exposed top surfaces.

(2) Drips on projecting components, wherever possible.

(3) 3/8" weep holes @24" o.c. for flush units.

b. Reinforcement: Provide reinforcement as required to withstand handling and structural stresses.

(1) Comply with ACI 318.

(2) Provide reinforcement of a minimum of 0.25 percent of cross-section area.

c Curing:

(1) Cure cast stone components with a direct fired steam generator at a minimum temperature of 105 degrees F for a minimum of 6 hours, within 12 hours of fabrication.

(2) Cure cast stone components in presence of carbon monoxide and carbon dioxide to promote carbonation at surface, to minimize efflorescence.

d. Finishing: Remove cement film from exposed surfaces before packaging for shipment.

e. Color: Cast stone components shall match color of the precast architectural concrete plinth specified in Section 03413.

f. Tolerances: Fabricate cast stone components within specified tolerances.

(1) All Dimensions: Plus or minus 1/8 inch.

(2) Maximum Bow, Camber, or Twist: Length/360.

PART 3 EXECUTION

3.1 EXAMINATION

Examine construction to receive cast stone components. Notify contract officer if construction is not acceptable. Do not begin installation until unacceptable conditions have been corrected.

3.2 INSTALLATION

General: Upon approval of Shop Drawings and Samples, install cast stone components in conjunction with masonry, complying with requirements of Section 04200.

a. Setting:

(1) Drench cast stone components with clear, running water

immediately before installation.

(2) Do not use pry bars or other equipment in a manner that could damage cast stone components.

(3) Fill dowel holes and anchor slots completely with mortar or non-shrink grout.

(4) Set cast stone components in a full bed of mortar, unless otherwise detailed.

(5) Fill vertical joints with mortar.

(6) Make all joints 3/8 inch, except as otherwise detailed.

(7) Leave head joints in copings and similar components open for sealant.

(8) Rake mortar joints 3/4 inch for pointing. Sponge face of each stone to remove excess mortar.

(9) Tuck point joints to a slight concave profile.

b. Sealant Joints:

(1) Comply with requirements of Section 07900.

(2) Prime ends of cast stone components, insert properly sized foam backing rod, and install sealant using sealant gun.

(3) Provide sealant joints at following locations and as otherwise detailed:

a. Cast stone components with exposed tops.
b. Joints at relieving angles.
c. At control and expansion joints.

3.3 TOLERANCES

Installation Tolerances: Comply with requirements of Cast Stone Institute Technical Manual for installation tolerances, unless otherwise specified.

a. Variation from Plumb: Do not exceed 1/8 inch in 10 feet or 1/4 inch in 20 feet or more

b. Variation from Level: Do not exceed 1/8 inch in 10 feet, 1/4 inch in 20 feet, or 3/8 inch maximum.

c. Variation in Joint Width: Do not vary joint thickness more than 1/8 inch in 36 inches or 1/4 of nominal joint width, whichever is less.

d. Variation in Plane Between Adjacent Surfaces (Lipping): Do not exceed 1/16-inch difference between planes of adjacent units or adjacent surfaces indicated to be flush with units.

3.4 ADJUSTING

Surface Repair:

a. Repair chipping and other surface damage noticeable when viewed in direct daylight at 10 feet.

b. Repair with matching touchup material provided by manufacturer and in accordance with manufacturer's instructions.

c. Repair methods and results to be approved by contracting officer.

3.5 CLEANING

a. In-Progress Cleaning:

(1) Clean cast stone components as work progresses.

(2) Remove mortar fins and smears before tooling joints.

b. Final Cleaning:

(1) Clean exposed cast stone, after mortar is thoroughly set and cured.

(2) Cleaner:

a. Wet surfaces with water before applying cleaner.

b. Apply cleaner to cast stone in accordance with manufacturer's instructions.

c. Remove cleaner promptly by rinsing thoroughly with clear water.

3.6 PROTECTION

a. Protect cast stone components from splashing and other damage.

-- End of Section --

SECTION 05090

WELDING, STRUCTURAL
09/98

PART 1 GENERAL

1.1 REFERENCES

The publications listed below form a part of this specification to the extent referenced. The publications are referred to in the text by basic designation only.

AMERICAN INSTITUTE OF STEEL CONSTRUCTION (AISC)

AISC ASD Spec	(1989) Specification for Structural Steel Buildings - Allowable Stress Design, Plastic Design

AMERICAN SOCIETY FOR NONDESTRUCTIVE TESTING (ASNT)

ASNT RP SNT-TC-1A	(1996) Recommended Practice SNT-TC-1A

AMERICAN WELDING SOCIETY (AWS)

AWS A2.4	(1998) Standard Symbols for Welding, Brazing and Nondestructive Examination
AWS A3.0	(1994) Standard Welding Terms and Definitions
AWS D1.1	(1998) Structural Welding Code - Steel
AWS Z49.1	(1999) Safety in Welding and Cutting and Allied Processes

1.2 DEFINITIONS

Definitions of welding terms shall be in accordance with AWS A3.0.

1.3 GENERAL REQUIREMENTS

The design of welded connections shall conform to AISC ASD Spec unless otherwise indicated or specified. Material with welds will not be accepted unless the welding is specified or indicated on the drawings or otherwise approved. Welding shall be as specified in this section, except where additional requirements are shown on the drawings or are specified in other sections. Welding shall not be started until welding procedures, inspectors, nondestructive testing personnel, welders, welding operators, and tackers have been qualified and the submittals approved by the Contracting Officer. Qualification testing shall be performed at or near the work site. Each Contractor performing welding shall maintain records of the test results obtained in welding procedure, welder, welding operator, and tacker performance qualifications.

1.4 SUBMITTALS

Government approval is required for submittals with a "G" designation; submittals not having a "G" designation are for information only. When used, a designation following the "G" designation identifies the office that will review the submittal for the Government. The following shall be submitted in accordance with Section 01330 SUBMITTAL PROCEDURES:

SD-03 Product Data

Welding Procedure Qualifications; G
Welder, Welding Operator, and Tacker Qualification; G
Inspector Qualification; G
Previous Qualifications;
Prequalified Procedures;

Copies of the welding procedure specifications; the procedure qualification test records; and the welder, welding operator, or tacker qualification test records.

SD-06 Test Reports

Quality Control; G

A quality assurance plan and records of tests and inspections.

1.5 WELDING PROCEDURE QUALIFICATIONS

Except for prequalified (per AWS D1.1) and previously qualified procedures, each Contractor performing welding shall record in detail and shall qualify the welding procedure specification for any welding procedure followed in the fabrication of weldments. Qualification of welding procedures shall conform to AWS D1.1 and to the specifications in this section. Copies of the welding procedure specification and the results of the procedure qualification test for each type of welding which requires procedure qualification shall be submitted for approval. Approval of any procedure, however, will not relieve the Contractor of the sole responsibility for producing a finished structure meeting all the requirements of these specifications. This information shall be submitted on the forms in Appendix E of AWS D1.1. Welding procedure specifications shall be individually identified and shall be referenced on the detail drawings and erection drawings, or shall be suitably keyed to the contract drawings. In case of conflict between this specification and AWS D1.1, this specification governs.

1.5.1 Previous Qualifications

Welding procedures previously qualified by test may be accepted for this contract without requalification if the following conditions are met:

a. Testing was performed by an approved testing laboratory, technical consultant, or the Contractor's approved quality control organization.

b. The qualified welding procedure conforms to the requirements of this specification and is applicable to welding conditions encountered under this contract.

c. The welder, welding operator, and tacker qualification tests conform to the requirements of this specification and are applicable to welding conditions encountered under this contract.

1.5.2 Prequalified Procedures

Welding procedures which are considered prequalified as specified in AWS D1.1 will be accepted without further qualification. The Contractor shall submit for approval a listing or an annotated drawing to indicate the joints not prequalified. Procedure qualification shall be required for these joints.

1.5.3 Retests

If welding procedure fails to meet the requirements of AWS D1.1, the procedure specification shall be revised and requalified, or at the Contractor's option, welding procedure may be retested in accordance with AWS D1.1. If the welding procedure is qualified through retesting, all test results, including those of test welds that failed to meet the requirements, shall be submitted with the welding procedure.

1.6 WELDER, WELDING OPERATOR, AND TACKER QUALIFICATION

Each welder, welding operator, and tacker assigned to work on this contract shall be qualified in accordance with the applicable requirements of AWS D1.1 and as specified in this section. Welders, welding operators, and tackers who make acceptable procedure qualification test welds will be considered qualified for the welding procedure used.

1.6.1 Previous Personnel Qualifications

At the discretion of the Contracting Officer, welders, welding operators, and tackers qualified by test within the previous 6 months may be accepted for this contract without requalification if all the following conditions are met:

a. Copies of the welding procedure specifications, the procedure qualification test records, and the welder, welding operator, and tacker qualification test records are submitted and approved in accordance with the specified requirements for detail drawings.

b. Testing was performed by an approved testing laboratory, technical consultant, or the Contractor's approved quality control organization.

c. The previously qualified welding procedure conforms to the requirements of this specification and is applicable to welding conditions encountered under this contract.

d. The welder, welding operator, and tacker qualification tests conform to the requirements of this specification and are applicable to welding conditions encountered under this contract.

1.6.2 Certificates

Before assigning any welder, welding operator, or tacker to work under this contract, the Contractor shall submit the names of the welders, welding operators, and tackers to be employed, and certification that each individual is qualified as specified. The certification shall state the type of welding and positions for which the welder, welding operator, or tacker is qualified, the code and procedure under which the individual is qualified, the date qualified, and the name of the firm and person certifying the qualification tests. The certification shall be kept on

file, and 3 copies shall be furnished. The certification shall be kept current for the duration of the contract.

1.6.3 Renewal of Qualification

Requalification of a welder or welding operator shall be required under any of the following conditions:

a. It has been more than 6 months since the welder or welding operator has used the specific welding process for which he is qualified.

b. There is specific reason to question the welder or welding operator's ability to make welds that meet the requirements of these specifications.

c. The welder or welding operator was qualified by an employer other than those firms performing work under this contract, and a qualification test has not been taken within the past 12 months. Records showing periods of employment, name of employer where welder, or welding operator, was last employed, and the process for which qualified shall be submitted as evidence of conformance.

d. A tacker who passes the qualification test shall be considered eligible to perform tack welding indefinitely in the positions and with the processes for which he is qualified, unless there is some specific reason to question the tacker's ability. In such a case, the tacker shall be required to pass the prescribed tack welding test.

1.7 INSPECTOR QUALIFICATION

Inspector qualifications shall be in accordance with AWS D1.1. Nondestructive testing personnel shall be qualified in accordance with the requirements of ASNT RP SNT-TC-1A for Levels I or II in the applicable nondestructive testing method. The inspector may be supported by assistant welding inspectors who are not qualified to ASNT RP SNT-TC-1A, and assistant inspectors may perform specific inspection functions under the supervision of the qualified inspector.

1.8 SYMBOLS

Symbols shall be in accordance with AWS A2.4, unless otherwise indicated.

1.9 SAFETY

Safety precautions during welding shall conform to AWS Z49.1.

PART 2 PRODUCTS

2.1 WELDING EQUIPMENT AND MATERIALS

All welding equipment, electrodes, welding wire, and fluxes shall be capable of producing satisfactory welds when used by a qualified welder or welding operator performing qualified welding procedures. All welding equipment and materials shall comply with the applicable requirements of AWS D1.1.

PART 3 EXECUTION

3.1 WELDING OPERATIONS

3.1.1 Requirements

Workmanship and techniques for welded construction shall conform to the requirements of AWS D1.1 and AISC ASD Spec. When AWS D1.1 and the AISC ASD Spec specification conflict, the requirements of AWS D1.1 shall govern.

3.1.2 Identification

Welds shall be identified in one of the following ways:

a. Written records shall be submitted to indicate the location of welds made by each welder, welding operator, or tacker.

b. Each welder, welding operator, or tacker shall be assigned a number, letter, or symbol to identify welds made by that individual. The Contracting Officer may require welders, welding operators, and tackers to apply their symbol next to the weld by means of rubber stamp, felt-tipped marker with waterproof ink, or other methods that do not cause an indentation in the metal. For seam welds, the identification mark shall be adjacent to the weld at 3 foot intervals. Identification with die stamps or electric etchers shall not be allowed.

3.2 QUALITY CONTROL

Testing shall be done by an approved inspection or testing laboratory or technical consultant; or if approved, the Contractor's inspection and testing personnel may be used instead of the commercial inspection or testing laboratory or technical consultant. The Contractor shall perform visual inspection to determine conformance with paragraph STANDARDS OF ACCEPTANCE. Procedures and techniques for inspection shall be in accordance with applicable requirements of AWS D1.1, except that in radiographic inspection only film types designated as "fine grain," or "extra fine," shall be employed.

3.3 STANDARDS OF ACCEPTANCE

Dimensional tolerances for welded construction, details of welds, and quality of welds shall be in accordance with the applicable requirements of AWS D1.1 and the contract drawings. Nondestructive testing shall be by visual inspection methods. The minimum extent of nondestructive testing shall be 100 percent of welds or joints.

3.3.1 Nondestructive Examination

The welding shall be subject to inspection and tests in the mill, shop, and field. Inspection and tests in the mill or shop will not relieve the Contractor of the responsibility to furnish weldments of satisfactory quality. When materials or workmanship do not conform to the specification requirements, the Government reserves the right to reject material or workmanship or both at any time before final acceptance of the structure containing the weldment.

3.3.2 Destructive Tests

When metallographic specimens are removed from any part of a structure, the Contractor shall make repairs. The Contractor shall employ qualified welders or welding operators, and shall use the proper joints and welding procedures, including peening or heat treatment if required, to develop the

full strength of the members and joints cut and to relieve residual stress.

3.4 GOVERNMENT INSPECTION AND TESTING

In addition to the inspection and tests performed by the Contractor for quality control, the Government will perform inspection and testing for acceptance to the extent determined by the Contracting Officer. The costs of such inspection and testing will be borne by the Contractor if unsatisfactory welds are discovered, or by the Government if the welds are satisfactory. The work may be performed by the Government's own forces or under a separate contract for inspection and testing. The Government reserves the right to perform supplemental nondestructive and destructive tests to determine compliance with paragraph STANDARDS OF ACCEPTANCE.

3.5 CORRECTIONS AND REPAIRS

When inspection or testing indicates defects in the weld joints, the welds shall be repaired using a qualified welder or welding operator as applicable. Corrections shall be in accordance with the requirements of AWS D1.1 and the specifications. Defects shall be repaired in accordance with the approved procedures. Defects discovered between passes shall be repaired before additional weld material is deposited. Wherever a defect is removed and repair by welding is not required, the affected area shall be blended into the surrounding surface to eliminate sharp notches, crevices, or corners. After a defect is thought to have been removed, and before rewelding, the area shall be examined by suitable methods to ensure that the defect has been eliminated. Repair welds shall meet the inspection requirements for the original welds. Any indication of a defect shall be regarded as a defect, unless reevaluation by nondestructive methods or by surface conditioning shows that no unacceptable defect is present.

-- End of Section --

SECTION 05120

STRUCTURAL STEEL
01/02

PART 1 GENERAL

1.1 REFERENCES

The publications listed below form a part of this specification to the extent referenced. The publications are referred to in the text by basic designation only.

AMERICAN INSTITUTE OF STEEL CONSTRUCTION (AISC)

AISC ASD Manual	(1989) Manual of Steel Construction Allowable Stress Design
AISC ASD/LRFD Vol II	(1992) Manual of Steel Construction Vol II: Connections
AISC Design Guide No. 10	(1989) Erection Bracing of Low-Rise Structural Steel Frames
AISC FCD	(1995a) Quality Certification Program
AISC LRFD Vol II	(1995) Manual of Steel Construction Load & Resistance Factor Design, Vol II: Structural Members, Specifications & Codes
AISC S303	(2000) Code of Standard Practice for Steel Buildings and Bridges

AMERICAN SOCIETY FOR TESTING AND MATERIALS (ASTM)

ASTM A 307	(2000) Carbon Steel Bolts and Studs, 60 000 PSI Tensile Strength
ASTM A 325	(2000) Structural Bolts, Steel, Heat Treated, 120/105 ksi Minimum Tensile Strength
ASTM A 36/A 36M	(2000a) Carbon Structural Steel
ASTM A 490	(2000) Heat-Treated Steel Structural Bolts, 150 ksi Minimum Tensile Strength
ASTM A 500	(1999) Cold-Formed Welded and Seamless Carbon Steel Structural Tubing in Rounds and Shapes
ASTM A 53/A 53M	(2001) Pipe, Steel, Black and Hot-Dipped, Zinc-Coated, Welded and Seamless
ASTM A 563	(2000) Carbon and Alloy Steel Nuts
ASTM A 572/A 572M	(2000a) High-Strength Low-Alloy

	Columbium-Vanadium Structural Steel
ASTM A 6/A 6M	(2001) General Requirements for Rolled Structural Steel Bars, Plates, Shapes, and Sheet Piling
ASTM A 992/A 992M	(2000) Steel for Structural Shapes For Use in Building Framing
ASTM F 436	(2000) Hardened Steel Washers
ASTM F 844	(2000) Washers, Steel, Plain (Flat), Unhardened for General Use

AMERICAN WELDING SOCIETY (AWS)

AWS A2.4	(1998) Standard Symbols for Welding, Brazing and Nondestructive Examination
AWS D1.1	(2000) Structural Welding Code - Steel

ASME INTERNATIONAL (ASME)

ASME B46.1	(1995) Surface Texture (Surface Roughness, Waviness, and Lay)

MASTER PAINTERS INSTITUTE (MPI)

MPI 79	(2001) Marine Alkyd Metal Primer

1.2 GENERAL REQUIREMENTS

Structural steel fabrication and erection shall be performed by an organization experienced in structural steel work of equivalent magnitude. The Contractor shall be responsible for correctness of detailing, fabrication, and for the correct fitting of structural members. Connections, for any part of the structure not shown on the contract drawings, shall be considered simple shear connections and shall be designed and detailed in accordance with pertinent provisions of AISC ASD Manual and AISC LRFD Vol II. Substitution of sections or modification of connection details will not be accepted unless approved by the Contracting Officer. AISC ASD Manual and AISC ASD/LRFD Vol II shall govern the work. Welding shall be in accordance with AWS D1.1; except that welding for critical applications shall be in accordance with Section 05090 WELDING, STRUCTURAL or paragraph WELDING. High-strength bolting shall be in accordance with AISC ASD Manual.

1.3 SUBMITTALS

Government approval is required for submittals with a "G" designation; submittals not having a "G" designation are for information only. When used, a designation following the "G" designation identifies the office that will review the submittal for the Government. The following shall be submitted in accordance with Section 01330 SUBMITTAL PROCEDURES:

SD-02 Shop Drawings

Structural Steel; G
Structural Connections; G

Shop and erection details including members (with their connections) not shown on the contract drawings. Welds shall be indicated by standard welding symbols in accordance with AWS A2.4.

SD-03 Product Data

Erection; G

Prior to erection, erection plan of the structural steel framing describing all necessary temporary supports, including the sequence of installation and removal.

Welding; G

WPS not prequalified.

WPS prequalified.

SD-07 Certificates

Mill Test Reports

Certified copies of mill test reports for structural steel, structural bolts, nuts, washers and other related structural steel items.

Welder Qualifications; G

Certified copies of welder qualifications test records showing qualification in accordance with AWS D1.1.

Welding Inspector; G

Welding Inspector qualifications.

Fabrication; G

A copy of the AISC certificate indicating that the fabrication plant meets the specified structural steelwork category.

1.4 MILL TEST REPORTS

Reports shall attest that the structural steel furnished contains no less than 25 percent recycled scrap steel and meets the requirements specified, prior to the installation.

1.5 STORAGE

Material shall be stored out of contact with the ground in such manner and location as will minimize deterioration.

1.6 WELDER QUALIFICATIONS

See Section 05090.

1.7 WELDING INSPECTOR

Welding Inspector qualifications shall be in accordance with AWS D1.1

PART 2 PRODUCTS

2.1 STRUCTURAL STEEL

2.1.1 Carbon Grade Steel

Carbon grade steel shall conform to ASTM A 36/A 36M.

2.1.2 High-Strength Low-Alloy Steel

High-strength low-alloy steel shall conform to ASTM A 572/A 572M, Grade 50.

2.1.3 Structural Shapes for Use in Building Framing

Wide flange shapes in accordance with ASTM A 992/A 992M shall be used where indicated on the drawings.

2.2 STRUCTURAL TUBING

Structural tubing shall conform to ASTM A 500, Grade B.

2.3 STEEL PIPE

Steel pipe shall conform to ASTM A 53/A 53M, Type E, Grade B.

2.4 HIGH STRENGTH BOLTS AND NUTS

High strength bolts shall conform to ASTM A 325, Type 1 with carbon steel nuts conforming to ASTM A 563, Grade C, DH.

2.5 CARBON STEEL BOLTS AND NUTS

Carbon steel bolts shall conform to ASTM A 307, Grade A with carbon steel nuts conforming to ASTM A 563, Grade A.

2.6 NUTS DIMENSIONAL STYLE

Carbon steel nuts shall be Heavy Hex style when used with ASTM A 307 bolts or Heavy Hex style when used with ASTM A 325 or ASTM A 490 bolts.

2.7 WASHERS

Plain washers shall conform to ASTM F 844. Other types, when required, shall conform to ASTM F 436.

2.8 PAINT

Paint shall conform to MPI 79 Section 09900.

PART 3 EXECUTION

3.1 FABRICATION

Fabrication shall be in accordance with the applicable provisions of AISC ASD Manual. Fabrication and assembly shall be done in the shop to the greatest extent possible. The fabricating plant shall be certified under the AISC FCD for Category SBD (Conventional Steel Building Structures) structural steelwork. Compression joints depending on contact bearing

shall have a surface roughness not in excess of 500 micro inches as determined by ASME B46.1, and ends shall be square within the tolerances for milled ends specified in ASTM A 6/A 6M. Structural steelwork, except surfaces of steel to be encased in concrete, surfaces to be field welded, surfaces to be fireproofed, and contact surfaces of friction-type high-strength bolted connections shall be prepared for painting in accordance with endorsement "P" of AISC FCD and primed with the specified paint.

3.2 ERECTION

a: Erection of structural steel, except as indicated in item b. below, shall be in accordance with the applicable provisions of AISC ASD Manual. Erection plan shall be reviewed, stamped and sealed by a structural engineer licensed by the state in which the project is located.

b. For low-rise structural steel buildings (60 feet tall or less and a maximum of 2 stories), the erection plan shall conform to AISC S303 and the structure shall be erected in accordance withAISC Design Guide No. 10.

3.2.1 Structural Connections

Anchor bolts and other connections between the structural steel and foundations shall be provided and shall be properly located and built into connecting work. Field welded structural connections shall be completed before load is applied. Tighten high-strength bolts to correct bolt tension in accordance with AISC Manual, Part 5, "Allowable Stress Design Specifications for Structural Joints using ASTM A 325 or ASTM A 490 bolts.

3.2.2 Base Plates and Bearing Plates

Column base plates for columns and bearing plates for beams, girders, and similar members shall be provided. Base plates and bearing plates shall be provided with full bearing after the supported members have been plumbed and properly positioned, but prior to placing superimposed loads. Separate setting plates under column base plates will not be permitted. The area under the plate shall be damp-packed solidly with bedding mortar, except where nonshrink grout is indicated on the drawings. Bedding mortar and grout shall be as specified in Section 03300 CAST-IN-PLACE STRUCTURAL CONCRETE.

3.2.3 Field Priming

After erection, the field bolt heads and nuts, field welds, and any abrasions in the shop coat shall be cleaned and primed with paint of the same quality as that used for the shop coat.

3.3 WELDING

The contractor shall develop and submit the Welding Procedure Specifications (WPS) for all welding, including welding done using prequalified procedures. Prequalified procedures may be submitted for information only; however, procedures that are not prequalified shall be submitted for approval.

-- End of Section --

SECTION 05210

STEEL JOISTS
01/02

PART 1 GENERAL

1.1 REFERENCES

The publications listed below form a part of this specification to the extent referenced. The publications are referred to in the text by basic designation only.

STEEL JOIST INSTITUTE (SJI)

SJI Specs & Tables	(1994) Standard Specifications Load Tables and Weight Tables for Steel Joists and Joist Girders

1.2 SUBMITTALS

Government approval is required for submittals with a "G" designation; submittals not having a "G" designation are for information only. When used, a designation following the "G" designation identifies the office that will review the submittal for the Government. The following shall be submitted in accordance with Section 01330 SUBMITTAL PROCEDURES:

SD-02 Shop Drawings

Steel Joists; G

Detail drawings shall include fabrication and erection details, specifications for shop painting, and identification markings of joists.

SD-07 Certificates

Steel Joists; G

Certificates stating that the steel joists have been designed and manufactured in accordance with SJI Specs & Tables. Certificates shall be stamped by a registered professional engineer and shall list the design loads and combinations used. Complete engineering design computations stamped by a registered professional engineer may be submitted in lieu of the certification.

1.3 GENERAL REQUIREMENTS

Steel joists are designated on the drawings in accordance with the standard designations of the Steel Joist Institute. Joists of other standard designations or joists with properties other than those shown may be substituted for the joists designated provided the structural properties are equal to or greater than those of the joists shown and provided all other specified requirements are met.

1.4 DELIVERY AND STORAGE

Materials shall be delivered to the site in undamaged condition and stored off the ground in a well drained location, protected from damage, and easily accessible for inspection and handling.

PART 2 PRODUCTS

2.1 OPEN WEB STEEL JOISTS

Open web steel joists shall conform to SJI Specs & Tables, K-Series and LH-Series. Joists shall be designed to support the loads given in the standard load tables of SJI Specs & Tables and the loads indicated on the drawings.

2.2 ACCESSORIES AND FITTINGS

Accessories and fittings, including end supports and bridging, shall be in accordance with the standard specifications under which the members were designed.

2.3 SHOP PAINTING

Joists and accessories shall be shop painted with a rust-inhibiting primer paint. For joists which will be finish painted under Section 09900 PAINTING, GENERAL, the primer paint shall be limited to a primer which is compatible with the specified finish paint.

PART 3 EXECUTION

3.1 ERECTION

Installation of joists shall be in accordance with the standard specification under which the member was produced. Joists hall be handled in a manner to avoid damage. Damaged joists shall be removed from the site, except when field repair is approved and such repairs are satisfactorily made in accordance with the manufacturer's recommendations. Joists shall be accurately set, and end anchorage shall be in accordance with the standard specification under which the joists were produced. For spans over 40 ft through 60 ft one row of bridging nearest midspan shall be bolted diagonal bridging; for spans over 60 ft bolted diagonal bridging shall be used instead of welded horizontal bridging. Joist bridging and anchoring shall be secured in place prior to the application of any construction loads. Any temporary loads shall be distributed so that the carrying capacity of any joist is not exceeded. Loads shall not be applied to bridging during construction or in the completed work. Abraded, corroded, and field welded areas shall be cleaned and touched up with the same type of paint used in the shop painting.

-- End of Section --

SECTION 05300

STEEL DECKING
01/02

PART 1 GENERAL

1.1 REFERENCES

The publications listed below form a part of this specification to the extent referenced. The publications are referred to in the text by basic designation only.

AMERICAN IRON AND STEEL INSTITUTE (AISI)

AISI Cold-Formed Mnl	(1996) Cold-Formed Steel Design Manual

AMERICAN SOCIETY FOR TESTING AND MATERIALS (ASTM)

ASTM A 611	(1997) Structural Steel (SS), Sheet, Carbon, Cold-Rolled
ASTM A 653/A 653M	(2000) Steel Sheet, Zinc-Coated (Galvanized) or Zinc-Iron Alloy-Coated (Galvannealed) by the Hot-Dip Process
ASTM A 780	(2000) Repair of Damaged and Uncoated Areas of Hot-Dipped Galvanized Coatings

AMERICAN WELDING SOCIETY (AWS)

AWS D1.3	(1998) Structural Welding Code - Sheet Steel

STEEL DECK INSTITUTE (SDI)

SDI Diaphragm Mnl	(1991) Diaphragm Design Manual
SDI Pub No. 29	(1995) Design Manual for Composite Decks, Form Decks, Roof Decks, and Cellular Metal Floor Deck with Electrical Distribution

THE SOCIETY FOR PROTECTIVE COATINGS (SSPC)

SSPC Paint 20	(1991) Zinc-Rich Primers (Type I - "Inorganic" and Type II - "Organic")

1.2 SUBMITTALS

Government approval is required for submittals with a "G" designation; submittals not having a "G" designation are for information only. When used, a designation following the "G" designation identifies the office that will review the submittal for the Government. The following shall be submitted in accordance with Section 01330 SUBMITTAL PROCEDURES:

SD-02 Shop Drawings

Deck Units; G
Accessories; G
Attachments; G
Holes and Openings; G

Drawings shall include type, configuration, structural properties, location, and necessary details of deck units, accessories, and supporting members; size and location of holes to be cut and reinforcement to be provided; location and sequence of welded or fastener connections; and the manufacturer's erection instructions.

SD-03 Product Data

Deck Units; G

Design computations for the structural properties of the deck units or SDI certification that the units are designed in accordance with SDI specifications.

Attachments; G

Prior to welding operations, copies of qualified procedures and lists of names and identification symbols of qualified welders and welding operators.

SD-07 Certificates

Deck Units; G

Manufacturer's certificates attesting that the decking material meets the specified requirements.

1.3 DELIVERY, STORAGE, AND HANDLING

Deck units shall be delivered to the site in a dry and undamaged condition, stored off the ground with one end elevated, and stored under a weathertight covering permitting good air circulation. Finish of deck units shall be maintained at all times by using touch-up paint whenever necessary to prevent the formation of rust.

PART 2 PRODUCTS

2.1 DECK UNITS

Deck units shall conform to SDI Pub No. 29. Panels of maximum possible lengths shall be used to minimize end laps. Deck units shall be fabricated in lengths to span 3 or more supports with flush, telescoped, or nested 2 inchlaps at ends, and interlocking, or nested side laps, unless otherwise indicated. Deck with cross-sectional configuration differing from the units indicated may be used, provided that the properties of the proposed units, determined in accordance with AISI Cold-Formed Mnl, are equal to or greater than the properties of the units indicated and that the material will fit the space provided without requiring revisions to adjacent materials or systems.

2.1.1 Roof Deck

Steel deck used in conjunction with insulation and built-up roofing shall conform to ASTM A 611. Roof deck units shall be fabricated of the steel design thickness required by the design drawings and shall be zinc-coated in conformance with ASTM A 653/A 653M, G90 coating class.

2.1.2 Sump Pans

Sump pans shall be provided for roof drains as indicated and shall be minimum 0.075 inch thick steel, recessed type. Sump pans shall be shaped to meet roof slope by the supplier or by a sheet metal specialist. Bearing flanges of sump pans shall overlap steel deck a minimum of 3 inches. Opening in bottom of pan shall be shaped, sized, and reinforced to receive roof drain.

2.2 TOUCH-UP PAINT

Touch-up paint for zinc-coated units shall be an approved galvanizing repair paint with a high-zinc dust content. Welds shall be touched-up with paint conforming to SSPC Paint 20 in accordance with ASTM A 780. Finish of deck units and accessories shall be maintained by using touch-up paint whenever necessary to prevent the formation of rust.

2.3 ADJUSTING PLATES

Adjusting plates or segments of deck units shall be provided in locations too narrow to accommodate full-size units. As far as practical, the plates shall be the same thickness and configuration as the deck units.

2.4 CLOSURE PLATES

2.4.1 Closure Plates for Roof Deck

Voids above interior walls shall be closed with sheet metal where shown. Open deck cells at parapets, end walls, eaves, and openings through roofs shall be closed with sheet metal. Sheet metal shall be same thickness as deck units.

2.4.1.1 Sheet Metal

Where deck is cut for passage of pipes, ducts, columns, etc., and deck is to remain exposed, provide a neatly cut sheet metal collar to cover edges of deck. Do not cut deck until after installation of supplemental supports.

2.5 ACCESSORIES

The manufacturer's standard accessories shall be furnished as necessary to complete the deck installation. Metal accessories shall be of the same material as the deck and have minimum design thickness as follows: saddles, 0.0474 inch; welding washers, 0.0598 inch; cant strip, 0.0295 inch; other metal accessories, 0.0358 inch; unless otherwise indicated. Accessories shall include but not be limited to saddles, welding washers, cant strips, butt cover plates, underlapping sleeves, and ridge and valley plates.

PART 3 EXECUTION

3.1 ERECTION

Erection of deck and accessories shall be in accordance with SDI Diaphragm Mnl and the approved detail drawings. Damaged deck and accessories

including material which is permanently stained or contaminated, with burned holes or deformed shall not be installed. The deck units shall be placed on secure supports, properly adjusted, and aligned at right angles to supports before being permanently secured in place. The deck shall not be used for storage or as a working platform until the units have been secured in position. Loads shall be distributed by appropriate means to prevent damage during construction and to the completed assembly. The maximum uniform distributed storage load shall not exceed the design live load. There shall be no loads suspended directly from the steel deck.

3.2 ATTACHMENTS

All fasteners shall be installed in accordance with the manufacturer's recommended procedure, except as otherwise specified. The deck units shall be welded with nominal 5/8 inch diameter puddle welds or fastened with screws to supports as indicated on the design drawings and in accordance with requirements of SDI Pub No. 29. All welding of steel deck shall be in accordance with AWS D1.3 using methods and electrodes as recommended by the manufacturer of the steel deck being used. Welds shall be made only by operators previously qualified by tests prescribed in AWS D1.3 to perform the type of work required. Welding washers shall not be used at the connections of the deck to supports. Holes and similar defects will not be acceptable. Deck ends shall be lapped 2 inches. All partial or segments of deck units shall be attached to structural supports in accordance with Section 2.5 of SDI Diaphragm Mnl. All metal deck units damaged by welding "blowholes" shall be repaired or replaced in accordance with the recommendation of the deck manufacturer as directed by the Contracting Officer.

3.3 HOLES AND OPENINGS

All holes and openings required shall be coordinated with the drawings, specifications, and other trades. Holes and openings shall be drilled or cut, reinforced and framed as indicated on the drawings or described in the specifications and as required for rigidity and load capacity. Holes and openings less than 6 inches across require no reinforcement. Holes and openings 6 to 12 inches across shall be reinforced by 0.0474 inch thick steel sheet at least 12 inches wider and longer than the opening and be fastened to the steel deck at each corner of the sheet and at a maximum of 6 inches on center. Holes and openings larger than 12 inches shall be reinforced by steel angles installed perpendicular to the steel joists and supported by the adjacent steel joists. See framing detail shown on KS-603. Steel angles shall be installed perpendicular to the deck ribs and shall be fastened to the angles perpendicular to the steel joists. Openings must not interfere with seismic members such as chords and drag struts.

3.4 PREPARATION OF FIRE-PROOFED SURFACES

Deck surfaces, both composite and noncomposite, which are to receive sprayed-on fireproofing, shall be galvanized and shall be free of all grease, mill oil, paraffin, dirt, salt, and other contaminants which impair adhesion of the fireproofing. Any required cleaning shall be done prior to steel deck installation using a cleaning method that is compatible with the sprayed-on fireproofing.

-- End of Section --

SECTION 05400

COLD-FORMED STEEL FRAMING
03/99

PART 1 GENERAL

1.1 REFERENCES

The publications listed below form a part of this specification to the extent referenced. The publications are referred to in the text by the basic designation only.

AMERICAN IRON AND STEEL INSTITUTE (AISI)

AISI Cold-Formed Spec	(1996) Specification & Commentary for the Design of Cold-Formed Steel Structural Members (Part V of the Cold-Formed Steel Design Manual)

AMERICAN SOCIETY FOR TESTING AND MATERIALS (ASTM)

ASTM A 123/A 123M	(1997ae1) Zinc (Hot-Dip Galvanized) Coatings on Iron and Steel Products
ASTM A 153/A 153M	(1998) Zinc Coating (Hot-Dip) on Iron and Steel Hardware
ASTM A 370	(1997a) Mechanical Testing of Steel Products
ASTM A 653/A 653M	(1999) Steel Sheet, Zinc Coated (Galvanized) or Zinc-Iron Alloy-Coated (Galvannealed) by the Hot-Dip Process
ASTM B 633	(1985; R 1998) Electrodeposited Coatings of Zinc on Iron and Steel
ASTM C 955	(1998) Load-Bearing (Transverse and Axial) Steel Studs, Runners (Tracks), and Bracing or Bridging for Screw Application of Gypsum Panel Products and Metal Plaster Bases
ASTM E 329	(1998) Agencies Engaged in the Testing and/or Inspection of Materials Used in Construction

AMERICAN WELDING SOCIETY (AWS)

AWS D1.3	(1998) Structural Welding Code - Sheet Steel

SOCIETY OF AUTOMOTIVE ENGINEERS INTERNATIONAL (SAE)

SAE J 78	(1998) Steel Self Drilling Tapping Screws

1.2 SUBMITTALS

Government approval is required for submittals with a "G" designation; submittals not having a "G" designation are for information only. When used, a designation following the "G" designation identifies the office that will review the submittal for the Government. The following shall be submitted in accordance with Section 01330 SUBMITTAL PROCEDURES:

SD-02 Shop Drawings

Framing Components; G

a. Cross sections, plans, and/or elevations showing component types and locations for each framing application; including shop coatings and material thicknesses for each framing component.

b. Connection details showing fastener type, quantity, location, and other information to assure proper installation.

c. Drawings depicting panel configuration, dimensions, components, locations, and construction sequence if the Contractor elects to install prefabricated/prefinished frames.

SD-07 Certificates

Mill Certificates; G

Mill certificates or test reports from independent testing agency, qualified in accordance with ASTM E 329, showing that the steel sheet used in the manufacture of each cold-formed component complies with the minimum yield strengths and uncoated steel thickness specified. Test reports shall be based on the results of three coupon tests in accordance with ASTM A 370.

Welds

Certified copies of welder qualifications test records showing qualification in accordance with AWS D1.3.

1.3 DELIVERY, HANDLING AND STORAGE

Materials shall be delivered and handled preventing bending or other damage, and avoiding contact with soil or other contaminating materials. Finish of the framing members shall be maintained at all times, using an approved high zinc dust content, galvanizing repair paint whenever necessary to prevent the formation of rust.

PART 2 PRODUCTS

2.1 STEEL STUDS, TRACKS, BRACING, BRIDGING, AND ACCESSORIES

Framing components shall comply with ASTM C 955 and the following:

a. Unless otherwise shown, material shall be corrosion-resistant steel complying with ASTM A 653/A 653M, Grade 33 or higher, having a minimum yield of 33,000 psi and a G 60 minimum zinc coating.

b. Minimum uncoated steel thickness (design thickness times 0.95):

(1). Unless otherwise shown, studs and tracks: 0.0329 inch. (Tracks shall be not less than stud thickness/gauge).

(2). Bracing and bridging: Thickness as shown on the drawings.

(3). Accessories: Standard thickness as provided by the manufacturer.

c. Unless otherwise shown, stud and track web depth: 3-5/8 inches.

d. Unless otherwise shown, stud flange width: 1-3/8 inches.

e. Minimum stud effective section properties:

(1). Sx = 0.215 in^3

(2). Ix = 0.435 in^4

(3). Mx = 4240 in-lb

2.2 MARKINGS

Studs and track shall have product markings on the web of the section. The markings shall be repeated throughout the length of the member at a maximum spacing of 4 feet on center and shall be legible and easily read. The product marking shall include the following:

a. Manufacturer's identification and Mill Certificates.

b. Minimum delivered uncoated steel thickness.

c. Protective coating designator.

d. Minimum yield strength.

2.3 CONNECTIONS

Unless otherwise shown, screws for steel-to-steel connections shall be self-drilling tapping in compliance with SAE J 78 of the type, size, and location as shown on the drawings. Electroplated screws shall have a Type II coating in accordance with ASTM B 633. Screws, bolts, and anchors shall be hot-dipped galvanized in accordance with ASTM A 123/A 123M or ASTM A 153/A 153M as appropriate. Screws bolts, and anchors shall be hot dipped galvanized in accordance with ASTM A 123/A 123M or ASTM A 153/A 153M as appropriate.

PART 3 EXECUTION

3.1 Delivery, Handling and Storage

a. Materials shall be delivered and handled in a manner to avoid bending or other damage and to avoid contact with the soil or other contaminating materials.

b. Finish of the framing members shall be maintained at all times, using an approved high zinc dust content galvanizing repair paint whenever necessary to prevent the formation of rust.

3.2 CONNECTIONS

3.2.1 Welds

All welding shall be performed in accordance with AWS D1.3, as modified by AISI Cold-Formed Spec. All welders, welding operations, and welding procedures shall be qualified according to AWS D1.3. All welds shall be cleaned and coated with rust inhibitive galvanizing paint.

3.2.2 Screws

Unless otherwise shown, screws shall be of the self-drilling self-tapping type, size, and location shown on the drawings. Screw penetration through joined materials shall not be less than three exposed threads. Minimum spacings and edge distances for screws shall be as specified in AISI Cold-Formed Spec. Screws covered by sheathing materials shall have low profile heads.

3.2.3 Anchors

Anchors shall be of the type, size, and location shown on the drawings.

3.3 INSTALLATION

3.3.1 General Requirements

a. Prefabricated frames shall be square, with components attached to prevent racking during fabrication, transportation, and lifting. Design and construction of frames shall include provisions for lifting.

b. Cutting of steel framing shall be by saw, shear, or plasma cutting equipment. Oxyacetylene torch cutting is not permitted.

c. Temporary bracing shall be provided and remain in place until work is permanently stabilized.

d. Abutting lengths of track shall be butt-welded, spliced, or each length securely anchored to a common structural element. Track shall be securely anchored to the supporting structure as shown on the drawings.

e. Splicing of framing components, other than track and tension members, is not permitted.

f. Wire tying of framing members is not permitted.

3.3.2 Non-Load Bearing Walls (Curtain walls)

a. Unless otherwise shown, studs shall be spaced 16 inches on center.

b. Studs shall be plumbed, aligned, and secured to the continuous runner tracks at each end, unless the stud end terminates at a deflection track.

c. Tracks shall be securely anchored to the supporting structure as shown on the drawings.

d. Unless otherwise shown, bridging spaced 48 inches shall be installed prior to the installation of facing materials.

e. Framed wall openings shall include headers and supporting components as shown on the drawings. Headers shall be installed in all openings that are larger than the stud spacing in a wall.

f. At wall openings for doors, windows and other similar features, the framing system shall provide for the installation and anchorage of the required subframes or finish frames. Steel frames shall be securely attached through built-in anchors to the nearest stud on each side of the opening with self-drilling screws. Double studs shall be provided at both jambs of all door openings.

g. Installation of sheathing, wallboards, or any other collateral material shall be performed in accordance with the product manufacturer's specifications.

h. Components (Deflection Track and/or Slide Clips) shall be provided at locations shown on the drawings to accommodate potential movements of Primary Frames. Construction shall accommodate a vertical movement of 1 inch.

3.4 TOLERANCES

Vertical alignment (plumbness) of studs shall be within 1/960th of the span. Horizontal alignment (levelness) of walls shall be within 1/960th of their respective lengths. Spacing of studs shall not be more than plus 1/8 inch from the designed spacing providing the the cumulative error does not exceed the requirements of the finishing material.

-- End of Section --

SECTION 05500

MISCELLANEOUS METAL
01/02

PART 1 GENERAL

1.1 REFERENCES

The publications listed below form a part of this specification to the extent referenced. The publications are referred to in the text by basic designation only.

ALUMINUM ASSOCIATION (AA)

AA DAF-45	(1997) Designation System for Aluminum Finishes

AMERICAN NATIONAL STANDARDS INSTITUTE (ANSI)

ANSI A14.3	(1992) Ladders - Fixed - Safety Requirements

AMERICAN SOCIETY FOR TESTING AND MATERIALS (ASTM)

ASTM A 123/A 123M	(2001) Zinc (Hot-Dip Galvanized) Coatings on Iron and Steel Products
ASTM A 53/A 53M	(2001) Pipe, Steel, Black and Hot-Dipped, Zinc-Coated, Welded and Seamless
ASTM A 526	Steel Sheet, Zinc-Coated (Galvanized) by the Hot-Dip Process, Commercial Quality
ASTM A 653/A 653M	(2000) Steel Sheet, Zinc-Coated (Galvanized) or Zinc-Iron Alloy-Coated (Galvannealed) by the Hot-Dip Process
ASTM A 570	Specification for Hot-Rolled Carbon Steel Sheet and Strip, Structural Quality
ASTM A 924/A 924M	(1999) General Requirements for Steel Sheet, Metallic-Coated by the Hot-Dip Process

AMERICAN WELDING SOCIETY (AWS)

AWS D1.1	(2000) Structural Welding Code - Steel

1.2 SUBMITTALS

Government approval is required for submittals with a "G" designation; submittals not having a "G" designation are for information only. When used, a designation following the "G" designation identifies the office that will review the submittal for the Government. The following shall be submitted in accordance with Section 01330 SUBMITTAL PROCEDURES:

SD-02 Shop Drawings

Miscellaneous Metal Items; G.

Detail drawings indicating material thickness, type, grade, and class; dimensions; and construction details. Drawings shall include catalog cuts, erection details, manufacturer's descriptive data and installation instructions, and templates. Detail drawings for the following items: Roof scuttles, ladder and roof curbs.

1.3 GENERAL REQUIREMENTS

The Contractor shall verify all measurements and shall take all field measurements necessary before fabrication. Welding to or on structural steel shall be in accordance with AWS D1.1. Items specified to be galvanized, when practicable and not indicated otherwise, shall be hot-dip galvanized after fabrication. Galvanizing shall be in accordance with ASTM A 123/A 123M, ASTM A 653/A 653M, or ASTM A 924/A 924M, as applicable. Exposed fastenings shall be compatible materials, shall generally match in color and finish, and shall harmonize with the material to which fastenings are applied. Materials and parts necessary to complete each item, even though such work is not definitely shown or specified, shall be included. Poor matching of holes for fasteners shall be cause for rejection. Fastenings shall be concealed where practicable. Thickness of metal and details of assembly and supports shall provide strength and stiffness. Joints exposed to the weather shall be formed to exclude water.

1.4 DISSIMILAR MATERIALS

Where dissimilar metals are in contact, or where aluminum is in contact with concrete, mortar, masonry, wet or pressure-treated wood, or absorptive materials subject to wetting, the surfaces shall be protected with a coat of bituminous paint or asphalt varnish.

1.5 WORKMANSHIP

Miscellaneous metalwork shall be well formed to shape and size, with sharp lines and angles and true curves. Drilling and punching shall produce clean true lines and surfaces. Welding shall be continuous along the entire area of contact except where tack welding is permitted. Exposed connections of work in place shall not be tack welded. Exposed welds shall be ground smooth. Exposed surfaces of work in place shall have a smooth finish, and unless otherwise approved, exposed riveting shall be flush. Where tight fits are required, joints shall be milled. Corner joints shall be coped or mitered, well formed, and in true alignment. Work shall be accurately set to established lines and elevations and securely fastened in place. Installation shall be in accordance with manufacturer's installation instructions and approved drawings, cuts, and details.

1.6 ANCHORAGE

Anchorage shall be provided where necessary for fastening miscellaneous metal items securely in place. Anchorage not otherwise specified or indicated shall include slotted inserts made to engage with the anchors, expansion shields, and power-driven fasteners when approved for concrete; toggle bolts and through bolts for masonry; machine and carriage bolts for steel; and lag bolts and screws for wood.

1.7 ALUMINUM FINISHES

Unless otherwise specified, aluminum items shall have anodized finish. The thickness of the coating shall be not less than that specified for protective and decorative type finishes for items used in interior locations or architectural Class I type finish for items used in exterior locations in AA DAF-45. Color shall be selected by Contracting Officer.

1.8 SHOP PAINTING

Surfaces of ferrous metal except galvanized surfaces, shall be cleaned and shop coated with the manufacturer's standard protective coating unless otherwise specified. Surfaces of items to be embedded in concrete shall not be painted. Items to be finish painted shall be prepared according to manufacturer's recommendations or as specified.

PART 2 PRODUCTS

2.1 ACCESS DOORS AND PANELS

Doors and panels shall be flush type unless otherwise indicated. Frames for access doors shall be fabricated of not lighter than 16 gauge steel with welded joints and finished with anchorage for securing into construction. Access doors shall be a minimum of 14 by 20 inches and of not lighter than 14 gauge steel, with stiffened edges, complete with attachments. Access doors shall be hinged to frame and provided with a flush face, screw driver operated latch. Exposed metal surfaces shall have a shop applied prime coat.

2.2 CLEANOUT DOORS

Cleanout doors shall be galvanized, shall be provided with frames, and unless otherwise indicated, shall be sized to match flues. The frames shall have a continuous flange and anchors for securing into masonry. The doors shall be smokeproof, hinged, and shall have fastening devices to hold the door closed.

2.3 PIPE GUARDS

Pipe guards shall be heavy duty steel pipe conforming to ASTM A 53/A 53M, Type E or S, weight STD, black finish.

2.4 LADDERS

Ladders shall be steel, heavy duty, Type I, fixed rail type in accordance with ANSI A14.3.

2.5 MIRROR FRAMES

Frames for plate glass mirrors larger than 18 by 30 inches shall be fabricated from corrosion-resisting steel with satin finish. Frames shall be provided with concealed fittings and tamperproof mountings.

2.6 MISCELLANEOUS

Miscellaneous plates and shapes for items that do not form a part of the structural steel framework, such as lintels, sill angles, miscellaneous mountings, and frames, shall be provided to complete the work.

2.7 ROOF SCUTTLES

Roof scuttles shall be of galvanized steel not less than 14 gauge, with 3 inch beaded flange welded and ground at corners. Scuttle shall be sized as indicated on the drawings. Cover and curb shall be insulated with 1 inch thick rigid insulation covered and protected by galvanized steel liner not less than 26 gauge. The curb shall be equipped with an integral metal cap flashing of the same gauge and metal as the curb, full welded and ground at corners for weathertightness. Scuttle shall be completely assembled with heavy hinges, compression spring operators enclosed in telescopic tubes, positive snap latch with turn handles on inside and outside and neoprene draft seal. Fasteners shall be provided for padlocking on the inside. The cover shall be equipped with an automatic hold-open arm complete with handle to permit one hand release.

2.8 PREFABRICATED ROOF CURBS

a. Provide shop-fabricated units. Where equipment is to be supported, modify if necessary to comply with requirements of size and weight of equipment. Where size or loading capacity requirements cannot be met through use of standard units, custom-fabricate units to match manufacturer's similar units.

b. Where units are shown to support shop-fabricated items of equipment, do not proceed with fabrication of units until size or dimensions and weights have been checked for coordination.

c. Fabricate units of minimum 18-gage structural quality sheet steel, ASTM A 570, grade as required, zinc-coated designation G90 hot-dip coating, mill-phosphatized. Fabricate with integral base plate, deck flanges, and without steel cant. Weld corners and seams to form watertight units.

d. Fabricate treated wood base to form a level base for roof and equipment curb installation.

e. Insulate curb wall of units with rigid glass-fiber insulation board of approximately 3-pound density and 1-1/2-inch minimum thickness.

f. Provide preservative-treated wood nailer, not less than nominal 2 x 2, and not less than width of curb wall assembly. Anchor nailer securely to top of metal frame unit.

g. Fabricate units to a total height of 8 inches from base of unit to top of nailer and to length and width as indicated.

h. Provide curb liners, formed of 22-gauge galvanized sheet metal, mill- phosphatized, flanged at lower edges. (Extend curb liners through deck construction to coordinate with Work below unit as indicated.) Provide curb liners for roof and equipment support curb units.

i. Reinforce roof and equipment support curbs with angles or T-bars as required by unit size and to meet weight requirements of equipment supported.

j. Provide cap flashing with units unless otherwise indicated,

fabricated to match curb units and to cover a minimum of 3 inches over roof flashing. Cap flashing shall be 18-gauge galvanized steel, ASTM A 526, 0.02% copper, G90 hot-dip zinc coating.

k. Fasteners: Noncorrosive, hot-dipped, zinc-coated metal screws, bolts and rivets of fabricator's standard or recommended types.

l. Gaskets: Tubular or fingered design of neoprene or PVC, or block design of sponge neoprene.

m. Mastic Sealant: Polyisobutylene, nonhardening, nonskimming, nondrying, nonmigrating sealant.

PART 3 EXECUTION

3.1 GENERAL INSTALLATION REQUIREMENTS

All items shall be installed at the locations shown and according to the manufacturer's recommendations. Items listed below require additional procedures as specified.

3.2 REMOVABLE ACCESS PANELS

A removable access panel not less than 12 by 12 inches shall be installed directly below each valve, flow indicator, damper, or air splitter that is located above the ceiling, other than an acoustical ceiling, and that would otherwise not be accessible.

3.3 ROOF SCUTTLES

a. Coordinate installation with roof deck construction, roof insulation, and roofing system to ensure that each element of the Work performs properly, and that combined elements are waterproof and weathertight. Anchor units securely to supporting structural substrates, adequate to withstand lateral and thermal stresses, as well as inward and outward loading pressures.

b. Separate metal surfaces from dissimilar metals, wood, and cementitious substrates as required to prevent corrosive action. Separate with a thick coating of bituminous compound or other separation as recommended by the roof unit manufacturer.

c. Bed flanges in mastic or compound which is compatible with roofing and flashing to form a seal.

3.4 INSTALLATION OF PIPE GUARDS

Pipe guards shall be set vertically in concrete piers. Piers shall be constructed of, and the hollow cores of the pipe filled with, concrete specified in Section 03300 CAST-IN-PLACE STRUCTURAL CONCRETE.

3.5 PREFABRICATED ROOF CURB

a. Coordinate installation with deck construction, roof insulation and roof system, and with equipment to be mounted on curb, to ensure that each element of the Work performs properly and that combined elements are waterproof and weathertight.

b. Locate each unit accurately in position indicated. Top of curb

shall be level after installation.

c. Anchor units to deck for secure support and attachment as indicated and as recommended by manufacturer.

d. Separate metal surfaces from dissimilar metals and from wood and cementitious substrates by a thick coating of bituminous compound or other separation, as recommended by manufacturer of roof curb. Bed flanges in mastic or compound which is compatible with roofing and flashing to form a seal.

e. Where cap flashing is required as a component, install to provide adequate waterproof overlap with roofing or roof flashing.

-- End of Section --

SECTION 06100

ROUGH CARPENTRY
10/01

PART 1 GENERAL

1.1 REFERENCES

The publications listed below form a part of this specification to the extent referenced. The publications are referred to in the text by basic designation only.

AMERICAN FOREST & PAPER ASSOCIATION (AF&PA)

AF&PA T01	(1991; Supple 1993; Addenda Apr 1997; Supple T02) National Design Specification for Wood Construction
AF&PA T11	(1988) Manual for Wood Frame Construction

AMERICAN INSTITUTE OF TIMBER CONSTRUCTION (AITC)

AITC 111	(1979) Recommended Practice for Protection of Structural Glued Laminated Timber During Transit, Storage and Erection

AMERICAN SOCIETY FOR TESTING AND MATERIALS (ASTM)

ASTM A 307	(2000) Carbon Steel Bolts and Studs, 60 000 PSI Tensile Strength
ASTM C 518	(1998) Steady-State Heat Flux Measurements and Thermal Transmission Properties By Means of the Heat Flow Meter Apparatus
ASTM C 578	(1995) Rigid, Cellular Polystyrene Thermal Insulation
ASTM D 2898	(1994; R 1999) Accelerated Weathering of Fire-Retardant-Treated Wood for Fire Testing

AMERICAN WOOD-PRESERVERS' ASSOCIATION (AWPA)

AWPA C20	(1999) Structural Lumber Fire-Retardant Pressure Treatment
AWPA C27	(1999) Plywood - Fire-Retardant Pressure Treatment
AWPA M4	(1999) Standard for the Care of Preservative-Treated Wood Products

APA - THE ENGINEERED WOOD ASSOCIATION (APA)

APA EWS R540C	(1996) Builder Tips Proper Storage and

	Handling of Glulam Beams
APA PRP-108	(1980; Rev Jan 1996) Performance Standards and Policies for Structural-Use Panels

CALIFORNIA REDWOOD ASSOCIATION (CRA)

CRA RIS-01-SS	(1997) Standard Specifications for Grades of California Redwood Lumber

U.S. DEPARTMENT OF COMMERCE (DOC)

DOC PS 1	(1996) Voluntary Product Standard - Construction and Industrial Plywood
DOC PS 2	(1992) Performance Standards for Wood-Based Structural-Use Panels

NATIONAL HARDWOOD LUMBER ASSOCIATION (NHLA)

NHLA Rules	(1994) Rules for the Measurement & Inspection of Hardwood & Cypress

NORTHEASTERN LUMBER MANUFACTURERS ASSOCIATION (NELMA)

NELMA Grading Rules	(1997) Standard Grading Rules for Northeastern Lumber

SOUTHERN CYPRESS MANUFACTURERS ASSOCIATION (SCMA)

SCMA Specs	(1986; Supple No. 1, Aug 1993) Standard Specifications for Grades of Southern Cypress

SOUTHERN PINE INSPECTION BUREAU (SPIB)

SPIB Rules	(1994; Supple 8 thru 11) Standard Grading Rules for Southern Pine Lumber

WEST COAST LUMBER INSPECTION BUREAU (WCLIB)

WCLIB Std 17	(1996; Supples VII(A-E), VIII(A-C)) Grading Rules for West Coast Lumber

WESTERN WOOD PRODUCTS ASSOCIATION (WWPA)

WWPA Grading Rules	(1999) Western Lumber Grading Rules 95

1.2 SUBMITTALS

Government approval is required for submittals with a "G" designation; submittals not having a "G" designation are for information only. When used, a designation following the "G" designation identifies the office that will review the submittal for the Government. The following shall be submitted in accordance with Section 01330 SUBMITTAL PROCEDURES:

SD-02 Shop Drawings

. Blocking, Nailers and Nailing Strips

Drawings of field erection details, including materials and methods of fastening nailers in conformance with Factory Mutual wind uplift rated systems specified in other Sections of these specifications.

SD-07 Certificates

Grading and Marking

Manufacturer's certificates (approved by an American Lumber Standards approved agency) attesting that lumber and material not normally grade marked meet the specified requirements. Certificate of Inspection for grade marked material by an American Lumber Standards Committee (ALSC) recognized inspection agency prior to shipment.

Insulation

Certificate attesting that the glass, polystyrene and polyurethane furnished for the project contains recovered material, and showing an estimated percent of such recovered material.

1.3 DELIVERY AND STORAGE

Materials shall be delivered to the site in undamaged condition, stored off ground in fully covered, well ventilated areas, and protected from extreme changes in temperature and humidity. Laminated timber shall be handled and stored in accordance with AITC 111 or APA EWS R540C.

PART 2 PRODUCTS

2.1 LUMBER AND SHEATHING

2.1.1 Grading and Marking

2.1.1.1 Lumber Products

Solid sawn and finger-jointed lumber shall bear an authorized gradestamp or grademark recognized by ALSC, or an ALSC recognized certification stamp, mark, or hammerbrand. Surfaces that are to be exposed to view shall not bear grademarks, stamps, or any type of identifying mark. Hammer marking will be permitted on timbers when all surfaces will be exposed to view.

2.1.1.2 Plywood and Other Sheathing Products

Materials shall bear the grademark or other identifying marks indicating grades of material and rules or standards under which produced, including requirements for qualifications and authority of the inspection organization. Except for plywood, bundle marking will be permitted in lieu of marking each individual piece. Surfaces that are to be exposed to view shall not bear grademarks or other types of identifying marks.

2.1.2 Sizes

Lumber and material sizes shall conform to requirements of the rules or standards under which produced. Unless otherwise specified, lumber shall be surfaced on four sides. Unless otherwise specified, sizes indicated are

nominal sizes, and actual sizes shall be within manufacturing tolerances allowed by the standard under which the product is produced.

2.1.3 Treatment

Exposed areas of treated wood that are cut or drilled after treatment shall receive a field treatment in accordance with AWPA M4. Items of all-heart material of cedar, cypress, or redwood will not require preservative treatment, except when in direct contact with soil. Except as specified for all-heart material of the previously mentioned species, the following items shall be treated:

a. Wood members in contact with or within 18 inches of soil.

b. Wood members in contact with water.

c. Wood members exposed to the weather including those used in builtup roofing systems or as nailing strips.

d. Wood members in contact with concrete that is in contact with soil or water or that is exposed to weather.

2.1.4 Moisture Content

At the time lumber and other materials are delivered and when installed in the work their moisture content shall be as follows:

a. Treated and Untreated Lumber Except Roof Planking: 4 inches or less, nominal thickness, 19 percent maximum. 5 inches or more, nominal thickness, 23 percent maximum in a 3 inch perimeter of the timber cross-section.

b. Materials Other Than Lumber: In accordance with standard under which product is produced.

2.1.5 Fire-Retardant Treatment

Fire-retardant treated wood shall be pressure treated in accordance with AWPA C20 for lumber and AWPA C27 for plywood. Material use shall be defined in AWPA C20 and AWPA C27 for Exterior Type. Treatment and performance inspection shall be by an independent and qualified testing agency that establishes performance ratings. Each piece or bundle of treated material shall bear identification of the testing agency to indicate performance in accordance with such rating. Treated materials to be exposed to rain wetting shall be subjected to an accelerated weathering technique in accordance with ASTM D 2898 prior to being tested for compliance with AWPA C20 or AWPA C27. All plywood shall be treated.

2.1.6 Sheathing

2.1.6.1 Plywood

Plywood shall conform to DOC PS 1, APA PRP-108 or DOC PS 2, Grade C-D or sheathing grade with exterior glue. All plywood shall be fire retardant. Sheathing for roof fascia without corner bracing of framing shall have a span rating of 24/0 or greater for supports 24 inches on center.

2.1.6.2 Wood Structural Panels

Panels shall meet the qualification requirements of APA PRP-108 or DOC PS 2 for rated sheathing, Exposure 1 or Structural I rated sheathing, Exposure 1. Sheathing for roofs or walls without corner bracing of framing shall have a span rating of 16/0 or greater for supports 16 inches on center.

2.1.6.3 Wood

Species and grade shall be in accordance with TABLE I at the end of this section. Wall sheathing shall be 1 inch thick for supports 16 or 24 inches on center without corner bracing of framing provided sheathing is applied diagonally.

2.1.7 Miscellaneous Wood Members

2.1.7.1 Blocking

Blocking shall be standard or number 2 grade.

2.2 ACCESSORIES AND NAILS

Markings shall identify both the strength grade and the manufacturer. Accessories and nails shall conform to the following:

2.2.1 Anchor Bolts

ASTM A 307, size as indicated, complete with nuts and washers.

2.2.2 Bolts: Lag, Toggle, and Miscellaneous Bolts and Screws

Type, size, and finish best suited for intended use. Finish options include zinc compounds, cadmium, and aluminum paint impregnated finishes.

2.2.3 Clip Angles

Steel, 3/16 inch thick, size best suited for intended use; or zinc-coated steel or iron commercial clips designed for connecting wood members.

2.3 INSULATION

Thermal resistance of insulation shall be not less than the R-values shown. R-values shall be determined at 75 degrees F in accordance with ASTM C 518. Contractor shall comply with EPA requirements in conformance with Section 01670 RECYCLED / RECOVERED MATERIALS. Insulation shall be the standard product of a manufacturer and factory marked or identified with manufacturer's name or trademark and R-value. Identification shall be on individual pieces or individual packages. Materials containing more than one percent asbestos will not be allowed.

2.3.1 Batt or Blanket

2.3.1.1 Glass Fiber Batts and Rolls

Glass fiber batts and rolls as specified in Section 04220, NONBEARING MASONRY VENEER/STEEL STUD WALLS and sound attenutation blankets specified in Section 09250, GYPSUM WALLBOARD and where indicated on drawings.

2.3.2 Foundation Rigid Insulation

2.3.2.1 Extruded Polystyrene Board

Polystyrene board shall be extruded and conform to ASTM C 578, Type IV.

2.3.2.2 Foam Insulation

Insulation at all structural steel tubes at exterior wall and where indicated on drawings.

PART 3 EXECUTION

3.1 INSTALLATION OF FRAMING

3.1.1 General

General framing shall be in accordance with AF&PA T11. Members shall be closely fitted, accurately set to required lines and levels, and rigidly secured in place. Members shall be framed for passage of ducts. Members shall be cut, notched, or bored in accordance with applicable requirements of AF&PA T01 for the passage of pipes, wires, or conduits.

3.2 INSTALLATION OF SHEATHING

3.2.1 Plywood and Wood Structural Panels

Sheathing shall be applied with edges 1/8 inch apart at side and end joints, and fastened at supported edges at 6 inches on center and at intermediate supports 12 inches on center unless otherwise shown. Fascia sheathing shall be applied horizontally.

3.3 INSTALLATION OF MISCELLANEOUS WOOD MEMBERS

3.3.1 Blocking, Nailers and Nailing Strips

Blocking shall be provided as necessary where indicated on the drawings and as necessary for the attachment of finish materials. Blocking/nailers used in conjunction with roof deck installation shall be installed flush with the roof deck system. Stacked blocking shall be assembled with fasteners, spikes or nails spaced not more than 18 inches on center and staggered. Beginning and ending nails shall not be more than 6 inches for nailer end. Ends of stacked nailers shall be offset approximately 12 inches in long runs and alternated at corners. Anchors shall extend through the entire thickness of the nailer. Strips shall be run in lengths as long as practicable, butt jointed, cut into wood framing members when necessary, and rigidly secured in place. Nailers and nailer installation for Factory Mutual wind uplift rated roof systems specified in other Sections of these specifications

3.4 INSTALLATION OF TIMBER CONNECTORS

Installation of timber connectors shall conform to applicable requirements of AF&PA T01.

3.5 INSTALLATION OF INSULATION

Insulation shall be installed after construction has advanced to a point that the installed insulation will not be damaged by remaining work. For thermal insulation the actual installed thickness shall provide the R-values shown. Insulation shall be installed on the weather side of such items as electrical boxes and water lines. Unless otherwise specified,

installation shall be in accordance with the manufacturer's recommendation.

3.6 TABLES

TABLE I. SPECIES AND GRADE

Fascia Sheathing, Furring

Grading Rules	Species	Const Standard	No. 2 Comm	No. 2 Board Comm	No. 3 Comm
NHLA Rules					
	Cypress			X	
NELMA Grading Rules					
	Northern White Cedar				X
	Eastern White Pine	X			
	Northern Pine	X			
	Balsam Fir				X
	Eastern Hemlock-Tamarack				X
CRA RIS-01-SS					
	Redwood		X		
SCMA Specs					
	Cypress			X	
SPIB Rules					
	Southern Pine		X		
WCLIB Std 17					
	Douglas Fir-Larch	X			
	Hem-Fir	X			
	Sitka Spruce	X			
	Mountain Hemlock	X			
	Western Cedar	X			
WWPA Grading Rules					
	Douglas Fir-Larch	X			
	Hem-Fir	X			
	Idaho White Pine	X			
	Lodgepole Pine			X	
	Ponderosa Pine			X	
	Sugar Pine			X	
	Englemann Spruce			X	
	Douglas Fir South			X	
	Mountain Hemlock			X	
	Subalpine Fir			X	
	Western Cedar			X	

TABLE II. SPECIES AND GRADE

Wood Bumpers

Grading Rules	Species	No. 1	No. 2
NHLA Rules			
	Red Oak	X	
NELMA Grading Rules			
	Northern Pine		X
	Eastern Hemlock-Tamarack		X
SPIB Rules			
	Southern Pine	X	
WCLIB Std 17			
	Douglas Fir-Larch		X
	Hem-Fir		X
WWPA Grading Rules			
	Douglas Fir-Larch		X
	Hem-Fir		X
	Douglas Fir-South		X

-- End of Section --

SECTION 06410

LAMINATE CLAD ARCHITECTURAL CASEWORK
07/01

PART 1 GENERAL

1.1 REFERENCES

The publications listed below form a part of this specification to the extent referenced. The publications are referred to in the text by basic designation only.

ARCHITECTURAL WOODWORK INSTITUTE (AWI)

AWI Qual Stds	(1999) Architectural Woodwork Quality Standards.

NATIONAL ELECTRICAL MANUFACTURERS ASSOCIATION (NEMA)

NEMA LD 3	(1995) High Pressure Decorative Laminates
NEMA LD 3.1	(1995) Performance, Application, Fabrication, and Installation of High Pressure Decorative Laminates

AMERICAN NATIONAL STANDARD INSTITUTE (ANSI)

ANSI A161.2	(1998) Decorative Laminate Countertops, Performance Standards for Fabricated High Pressure

AMERICAN SOCIETY FOR TESTING AND MATERIALS (ASTM)

ASTM F 547	(1977; R 1995) Definition of Terms Relating to Nails for Use with Wood and Wood-Based Materials.

BUILDERS HARDWARE MANUFACTURERS ASSOCIATION (BHMA)

BHMA A156.9	(1994) Cabinet Hardware

NATIONAL WOOD WINDOW & DOOR ASSOCIATION (NWWDA)

NWWDA I.S. 1-A	(1997) Architectural Wood Flush Doors

1.2 GENERAL DESCRIPTION

Work in this section includes laminate clad custom casework cabinets and countertops as shown on the drawings and as described in this specification. This Section includes high-pressure laminate surfacing and cabinet hardware. All exposed and semi-exposed surfaces, whose finish is not otherwise noted on the drawings or finish schedule, shall be sanded smooth and shall receive a clear finish of polyurethane. Wood finish may be shop finished or field applied in accordance with Section 09900 PAINTING, GENERAL.

1.3 SUBMITTALS

Government approval is required for submittals with a "G" designation; submittals not having a "G" designation are for information only. When used, a designation following the "G" designation identifies the office that will review the submittal for the Government. All items designated with a "G", including product literature, calculations, component data, certificates, diagrams, drawings, and samples shall be submitted concurrently in one complete system submittal. Omission of any required submittal item from the package shall be sufficient cause for disapproval of the entire submittal. Unless otherwise indicated in the submittal review commentary, disapproval of any item within the package shall require a re-submittal of the entire system package, in which all deficiencies shall be corrected. The following shall be submitted in accordance with Section 01330 SUBMITTAL PROCEDURES.

SD-02 Shop Drawings

Shop Drawings; G
Installation; G

Shop drawings showing all fabricated casework items in plan view, elevations and cross-sections to accurately indicate materials used, details of construction, dimensions, methods of fastening and erection, and installation methods proposed. Shop drawing casework items shall be clearly cross-referenced to casework items located on the project drawings. Shop drawings shall include a color schedule of all casework items to include all countertop, exposed, and semi-exposed cabinet finishes to include finish material manufacturer, pattern, and color.

SD-03 Product Data

Wood Materials; G
Wood Finishes; G
Finish Schedule; G

Descriptive data which provides narrative written verification of all types of construction materials and finishes, methods of construction, etc. not clearly illustrated on the submitted shop drawings. Data shall provide written verification of conformance with AWI Qual Stds for the quality indicated to include materials, tolerances, and types of construction. Both the manufacturer of materials and the fabricator shall submit available literature which describes re-cycled product content, operations and processes in place that support efficient use of natural resources, energy efficiency, emissions of ozone depleting chemicals, management of water and operational waste, indoor environmental quality, and other production techniques supporting sustainable design and products.

SD-04 Samples

Plastic Laminates; G

Two samples of each plastic laminate pattern and color. Samples shall be a minimum of 5 by 7 inches in size.

Cabinet Hardware; G

One sample of each cabinet hardware item specified to include hinges, pulls, and drawer glides.

SD-07 Certificates

Quality Assurance
Laminate Clad Casework

A quality control statement which illustrates compliance with and understanding of AWI Qual Stds requirements, in general, and the specific AWI Qual Stds requirements provided in this specification. The quality control statement shall also certify a minimum of ten years contractor's experience in laminate clad casework fabrication and construction. The quality control statement shall provide a list of a minimum of five successfully completed projects of a similar scope, size, and complexity.

1.4 QUALITY ASSURANCE

Unless otherwise noted on the drawings, all materials, construction methods, and fabrication shall conform to and comply with the premium grade quality standards as outlined in AWI Qual Stds, Section 400G and Section 400B for laminate clad cabinets. These standards shall apply in lieu of omissions or specific requirements in this specification. Contractors and their personnel engaged in the work shall be able to demonstrate successful experience with work of comparable extent, complexity and quality to that shown and specified. Contractor must demonstrate knowledge and understanding of AWI Qual Stds requirements for the quality grade indicated.

1.5 DELIVERY AND STORAGE

Casework may be delivered knockdown or fully assembled. All units shall be delivered to the site in undamaged condition, stored off the ground in fully enclosed areas, and protected from damage. The storage area shall be well ventilated and not subject to extreme changes in temperature or humidity.

1.6 SEQUENCING AND SCHEDULING

Work shall be coordinated with other trades. Units shall not be installed in any room or space until painting, and ceiling installation are complete within the room where the units are located. Floor cabinets shall be installed before finished flooring materials are installed.

1.7 PROJECT/SITE CONDITIONS

Field measurements shall be verified as indicated in the shop drawings before fabrication.

PART 2 PRODUCTS

2.1 WOOD MATERIALS

2.1.1 Lumber

All framing lumber shall be kiln-dried Grade III to dimensions as shown on the drawings. Frame front, where indicated on the drawings, shall be nominal 3/4 inch hardwood.

2.1.1.1 Standing and Running Trim

Standing or running trim casework components which are specified to receive a transparent finish shall be red oak hardwood species, plain sawn. AWI grade shall be premium. Location, shape, and dimensions shall be as indicated on the drawings.

2.1.2 Panel Products

2.1.2.1 Plywood

All plywood panels used for framing purposes shall be veneer core hardwood plywood, AWI Qual Stds Grade AA. Nominal thickness of plywood panels shall be as indicated in this specification and on the drawings.

2.2 HIGH PRESSURE DECORATIVE LAMINATE (HPDL)

All plastic laminates shall meet the requirements of NEMA LD 3 and ANSI A161.2 for high-pressure decorative laminates. Design, colors, surface finish and texture, and locations shall be as indicated on the drawings. Plastic laminate types and nominal minimum thicknesses for casework components shall be as indicated in the following paragraphs.

2.2.1 Horizontal General Purpose Standard (HGS) Grade

Horizontal general purpose standard grade plastic laminate shall be 0.048 inches (plus or minus 0.005 inches) in thickness. This laminate grade is intended for horizontal surfaces and exposed drawer and door edges where postforming is not required.

2.2.2 Vertical General Purpose Standard (VGS) Grade

Vertical general purpose standard grade plastic laminate shall be 0.028 inches (plus or minus 0.004 inches) in thickness. This laminate grade is intended for exposed exterior vertical surfaces of casework components where postforming is not required.

2.2.3 Cabinet Liner Standard (CLS) Grade

Cabinet liner standard grade plastic laminate shall be 0.020 inches in thickness. This laminate grade is intended for light duty semi-exposed interior surfaces of casework components.

2.2.4 Backing Sheet (BK) Grade

Undecorated backing sheet grade laminate is formulated specifically to be used on the backside of plastic laminated panel substrates to enhance dimensional stability of the substrate. Backing sheet thickness shall be 0.020 inches. Backing sheets shall be provided for all laminated casework components where plastic laminate finish is applied to only one surface of the component substrate.

2.3 CABINET HARDWARE

All hardware shall conform to BHMA A156.9, unless otherwise noted, and shall consist of the following components:

a. Door Hinges: Self-closing, 165 degree type, BHMA No. B01603.

b. Cabinet Pulls: Wire type, BHMA No. B02011.

c. Drawer Slide: Side mounted type, BHMA No. B05051 with full extension and a minimum 75 pound load capacity. Slides shall include an integral stop to avoid accidental drawer removal.

d. Adjustable Shelf Support System: Recessed (mortised) metal standards, BHMA No. B04071. Support clips for the standards shall be open type, BHMA No. B04091.

2.4 FASTENERS

Nails, screws, and other suitable fasteners shall be the size and type best suited for the purpose and shall conform to ASTM F 547 where applicable.

2.5 ADHESIVES, CAULKS, AND SEALANTS

2.5.1 Adhesives

Adhesives shall be of a formula and type recommended by AWI. Adhesives shall be selected for their ability to provide a durable, permanent bond and shall take into consideration such factors as materials to be bonded, expansion and contraction, bond strength, fire rating, and moisture resistance. Adhesives shall meet local regulations regarding VOC emissions and off-gassing.

2.5.1.1 Wood Joinery

Adhesives used to bond wood members shall be a Type II for interior use. Adhesives shall withstand a bond test as described in NWWDA I.S. 1-A.

2.5.1.2 Laminate Adhesive

Adhesive used to join high-pressure decorative laminate to wood shall be a water-based contact adhesive and consistant with AWI and laminate manufacturer's recommendations.

2.5.2 Caulk

Caulk used to fill voids and joints between laminated components and between laminated components and adjacent surfaces shall be clear, 100 percent silicone.

2.5.3 Sealant

Sealant shall be of a type and composition recommended by the substrate manufacturer to provide a moisture barrier at sink cutouts and all other locations where unfinished substrate edges may be subjected to moisture.

2.6 WOOD FINISHES

Paint, stain, varnish and their applications required for laminate clad casework components shall be clear.

2.7 ACCESSORIES

2.7.1 Grommets

Grommets shall be plastic material for cutouts with a diameter of 1-3/4 inches. Locations shall be as indicated on the drawings.

2.8 FABRICATION

Fabrication and assembly of components shall be accomplished at the shop site to the maximum extent possible. Construction and fabrication of cabinets and their components shall meet or exceed the requirements for AWI premium grade unless otherwise indicated in this specification. Cabinet style, in accordance with AWI Qual Stds, Section 400-G descriptions, shall be flush overlay.

2.8.1 Base and Wall Cabinet Case Body

Frame members shall be glued-together, kiln-dried hardwood lumber. Top corners, bottom corners, and cabinet bottoms shall be braced with either hardwood blocks or water-resistant glue and nailed in place metal or plastic corner braces. Cabinet components shall be constructed from the following materials and thicknesses:

a. Body Members (Ends, Divisions, Bottoms, and Tops): 3/4 inch veneer core plywood panel product.

b. Face Frames and Rails: 3/4 inch hardwood lumber.

c. Shelving: 3/4 inch veneer core plywood panel product.

d. Cabinet Backs: 1/4 inch veneer core plywood panel product.

e. Drawer Sides, Backs, and Subfronts: 1/2 inch hardwood lumber.

f. Drawer Bottoms: 1/4 inch veneer core plywood panel product.

g. Door and Drawer Fronts: 3/4-inch veneer core plywood panel product.

2.8.1.1 Joinery Method for Case Body Members

a. Tops, Exposed Ends, and Bottoms.

1) Spline or biscuit, glued under pressure.

b. Exposed End Corner and Face Frame Attachment.

1) For mitered joint: lock miter or spline or biscuit, glued under pressure (no visible fasteners).

2) For non-mitered joint (90 degree): butt joint glued under pressure (no visible fasteners).

c. Cabinet Backs (Wall Hung Cabinets): Wall hung cabinet backs must not be relied upon to support the full weight of the cabinet and its anticipated load for hanging/mounting purposes. Method of back joinery and hanging/mounting mechanisms should transfer the load to case body members. Fabrication method shall be:

1) Full bound, captured in grooves on cabinet sides, top, and bottom. Cabinet backs for floor standing cabinets shall be side bound, captured in grooves; glued and fastened to top and bottom.

d. Cabinet Backs (Floor Standing Cabinets).

1) Side bound, captured in grooves; glued and fastened to top and bottom.

e. Wall Anchor Strips shall be required for all cabinets with backs less than 1/2 inch thick. Strips shall consist of minimum 1/2 inch thick lumber, minimum 2-1/2 inches width; securely attached to wall side of cabinet back - top and bottom for wall hung cabinets, top only for floor standing cabinets.

2.8.2 Cabinet Floor Base

Floor cabinets shall be mounted on a base constructed of nominal 2 inch thick lumber. Base assembly components shall be treated lumber. Finished height for each cabinet base shall be as indicated on the drawings. Bottom edge of the cabinet door or drawer face shall be flush with top of base.

2.8.3 Cabinet Door and Drawer Fronts

Door and drawer fronts shall be fabricated from 3/4 inch veneer core plywood. All door and drawer front edges shall be surfaced with high pressure plastic laminate, color and pattern to match exterior face laminate as indicated on the drawings.

2.8.4 Drawer Assembly

Drawer components shall consist of a removable drawer front, sides, backs, and bottom. Drawer components shall be constructed of the following materials and thicknesses:

a. Drawer Sides and Backs For Transparent Finish: 1/2 inch thick solid hardwood lumber.

2.8.4.1 Drawer Assembly Joinery Method

a. Multiple dovetail (all corners) or French dovetail front/dadoed back, glued under pressure.

2.8.5 Shelving

Shelving shall be fabricated from 3/4 inch veneer core plywood. All shelving top and bottom surfaces shall be finished with HPDL plastic laminate. Shelf edges shall be finished in a HPDL plastic laminate.

2.8.5.1 Shelf Support System

The shelf support system shall be:

a. Recessed (mortised) metal shelf standards. Standards shall be mortised flush with the finishes surface of the cabinet interior side walls, two per side. Standards shall be positioned and spaced on the side walls to provide a stable shelf surface that eliminates tipping when shelf front is weighted. Standards shall be installed and adjusted vertically to provide a level, stable shelf surface when clips are in place.

2.8.6 Laminate Clad Countertops and Window Sills

Laminate countertop and window sills substrate shall be constructed of 3/4 inch veneer core plywood. The substrate shall be moisture-resistant where countertops receive sinks, lavatories, or are subjected to liquids. All substrates shall have sink cutout edges sealed with appropriate sealant against moisture. No joints shall occur at any cutouts. A balanced backer sheet is required.

2.8.6.1 Edge Style

Front and exposed side countertop edges shall be in shapes and to dimensions as shown on the drawings. The countertop edge material shall be:

a. Plastic laminate Self Edge. Flat, 90 degree "self" edge. Edge must be applied before top. Laminate edge shall overlap countertop laminate and shall be eased to eliminate sharp corners.

2.8.6.2 Laminate Clad Splashes

Countertop splash substrate shall be 3/4 inch veneer core plywood. Laminate clad backsplash shall be loose, to be installed at the time of countertop installation. Side splashes shall be straight profile and provided loose, to be installed at the time of countertop installation. Back and side splash laminate pattern and color shall match the adjacent countertop laminate.

2.8.7 Laminate Application

Laminate application to substrates shall follow the recommended procedures and instructions of the laminate manufacturer and NEMA LD 3.1, using tools and devices specifically designed for laminate fabrication and application. Provide a balanced backer sheet (Grade BK) wherever only one surface of the component substrate requires a plastic laminate finish. Apply required grade of laminate in full uninterrupted sheets consistent with manufactured sizes using one piece for full length only, using adhesives specified herein or as recommended by the manufacturer. Fit corners and joints hairline. All laminate edges shall be machined flush, filed, sanded, or buffed to remove machine marks and eased (sharp corners removed). Clean up at easing shall be such that no overlap of the member eased is visible. Fabrication shall conform to NEMA LD 3.1 and ANSI A161.2. Laminate types and grades for component surfaces shall be as follows unless otherwise indicated on the drawings:

a. Base/Wall Cabinet Case Body.

1) Exterior (exposed) surfaces to include exposed and semi-exposed face frame surfaces: HPDL Grade VGS.

2) Interior (semi-exposed) surfaces to include interior back wall, bottom, and side walls: HPDL Grade CLS.

b. Adjustable Shelving.

1) Top and bottom surfaces: HPDL Grade HGS.

2) All edges: HPDL Grade VGS.

c. Fixed Shelving.

1) Top and bottom surfaces: HPDL Grade HGS.

2) Exposed edges: HPDL Grade VGS.

d. Door, Drawer Fronts, Access Panels.

1) Exterior (exposed) and interior (semi-exposed) faces: HPDL Grade VGS.

2) Edges: HPDL Grade VGS.

e. Drawer Assembly.

All interior and exterior surfaces: HPDL Grade CLS.

f. Countertops, Countertop Supports and Splashes.

1) All exposed and semi-exposed surfaces: HPDL Grade HGS.

2.8.7.1 Tolerances

Flushness, flatness, and joint tolerances of laminated surfaces shall meet the AWI Qual Stds premium grade requirements.

2.8.8 Finishing

2.8.8.1 Filling

No fasteners shall be exposed on laminated surfaces. All nails, screws, and other fasteners in non-laminated cabinet components shall be countersunk and the holes filled with wood filler consistent in color with the wood species.

2.8.8.2 Sanding

All surfaces requiring coatings shall be prepared by sanding with a grit and in a manner that scratches will not show in the final system.

2.8.8.3 Coatings

Types, method of application and location of casework finishes shall be in accordance with the finish schedule, drawings and Section 09900 PAINTING, GENERAL. All cabinet reveals shall be painted.

PART 3 EXECUTION

3.1 INSTALLATION

Installation shall comply with applicable requirements for AWI Qual Stds premium quality standards. Countertops and fabricated assemblies shall be installed level, plumb, and true to line, in locations shown on the drawings. Cabinets and other laminate clad casework assemblies shall be attached and anchored securely to the floor and walls with mechanical fasteners that are appropriate for the wall and floor construction.

3.1.1 Anchoring Systems

3.1.1.1 Floor

Cabinet assemblies shall be attached to anchored bases without visible

fasteners. Where assembly abutts a wall surface, anchoring shall include a minimum 1/2 inch thick lumber or panel product hanging strip, 2-1/2 inch width; securely attached to the top of the wall side of the cabinet back.

3.1.1.2 Wall

Cabinet to be wall mounted shall utilize minimum 1/2 inch thick lumber or panel product hanging strips, minimum 2-1/2 inch width; securely attached to the wall side of the cabinet back, both top and bottom.

3.1.2 Countertops, Window Sills

Countertops shall be installed in locations as indicated on the drawings. Countertops shall be fastened to supporting casework structure with mechanical fasteners, hidden from view. All joints formed by the countertop or countertop splash and adjacent wall surfaces shall be filled with a clear silicone caulk.

3.1.2.1 Loose Splashes

Loose back and side splashes shall be adhered to both the countertop surface perimeter and the adjacent wall surface with adhesives appropriate for the type of materials to be adhered. Joints between the countertop surface and splash shall be filled with clear silicone caulk in a smooth consistent concave bead. Bead size shall be the minimum necessary to fill the joint and any surrounding voids or cracks.

3.1.3 Hardware

Casework hardware shall be installed in types and locations as indicated on the drawings. Where fully concealed European-style hinges are specified to be used with plywood doors, the use of plastic or synthetic insertion dowels shall be used to receive 3/16 inch "Euroscrews". The use of wood screws without insertion dowels is prohibited.

3.1.4 Doors, Drawers and Removable Panels

The fitting of doors, drawers and removable panels shall be accomplished within target fitting tolerances for gaps and flushness in accordance with AWI Qual Stds premium grade requirements.

3.1.5 Plumbing Fixtures

Sinks, sink hardware, and other plumbing fixtures shall be installed in locations as indicated on the drawings and in accordance with Section 15400 PLUMBING, GENERAL PURPOSE.

-- End of Section --

SECTION 06700

ANCHORS AND FASTENERS
09/01

PART 1 GENERAL

1.1 DESCRIPTION

This Section includes anchors and fasteners for general use in securing materials in place. Fasteners and anchors indicated or specified in other Sections or on the drawings have precedence over those specified in this Section. It includes screws, bolts, nails, expansion anchors (stud anchors, sleeve anchors).

1.2 REFERENCES

The publications listed below form a part of this specification to the extent referenced. The publications are referred to within the text by the basic designation only.

ASME INTERNATIONAL (ASME)

ASME B18.1.2	Fasteners in Customary Units - Large Rivets

AMERICAN SOCIETY FOR TESTING AND MATERIALS (ASTM)

ASTM F 468	Nonferrous Bolts, Hex Cap Screws, and Studs for General Use
ASTM F 1667	Driven Fasteners: Nails, Spikes, and Staples

DEPARTMENT OF DEFENSE (DOD)

DOD A-A-1922	Shield Expansion (Caulking Anchors, Single Lead)
DOD A-A-1923	Shield Expansion (Lag, Machine, and Externally Threaded Wedge Bolt Anchors)
DOD A-A-1924	Shield Expansion (Self-Drilling Tubular Expansion Shell Bolt Anchors)
DOD A-A-1925	Shield Expansion (Nail Anchors)
DOD A-A-55614	Shield Expansion (Nondrilling Expansion Anchors)
DOD A-A-55615	Shield, Expansion (Wood Screw and Lag Bolt Self-Threading Anchors)

1.3 SUBMITTALS

Government approval is required for submittals with a "G" designation; submittals not having a "G" designation are for information only or as otherwise designated. When used, a designation following the "G"

designation identifies the office that will review the submittal for the Government. The following shall be submitted in accordance with Section 01330 SUBMITTAL PROCEDURES:

SD-03 Product Data

Manufacturer's data indicating strength capabilities of anchors and fasteners to be used.

1.4 DELIVERY, STORAGE, AND HANDLING

Deliver and store anchors and fasteners in manufacturer's original packaging, with labels intact and legible. Store and handle to prevent corrosion or damage prior to installation.

PART 2 PRODUCTS

2.1 ACCEPTABLE MANUFACTURERS

Acceptable manufacturers include, but not limited to:

2.1.1 Expansion Anchors

a. ITW Ramset/Red Head.

b. Hilti, Inc.

c. Powers Fasteners, Inc.

d. Wej-It Fastening Systems.

2.1.2 Self-Drilling Fasteners

a. Buildex, Division of Illinois Tool Works, Inc.

2.2 GENERAL REQUIREMENTS

2.2.1 Expansion Anchors

Expansion anchors shall conform to DOD A-A-1922, DOD A-A-1923, DOD A-A-1924, DOD A-A-1925, DOD A-A-55614, and DOD A-A-55615.

a. Stud Anchors: Group II, Type 4, Class 1, zinc-plated steel.

b. Sleeve Anchors: Group II, Type 3, Class 3.

2.2.2 Self-drilling fasteners shall be one of the following materials:

a. Carbon steel that is case-hardened and cadmium- or zinc-plated.

b. 410 stainless steel that is case-hardened and cadmium- or zinc-plated.

c. Plastic-headed on a carbon steel or 410 stainless screw.

d. 302 stainless steel Scots cap on a carbon steel or 410 stainless steel screw.

2.2.3 Wood screws

Wood screws shall conform to DOD A-A-55615.

2.2.4 Nails

Nails shall conform to ASTM F 1667.

2.2.5 Bolts

Bolts shall conform to ASTM F 468.

2.2.6 Lag Screws

Lag screws shall conform to ASME B18.1.2.

2.2.7 Washers

Washers shall be of material compatible with or same material as fastener.

2.3 ANCHORS AND FASTENERS

Based upon material to be fastened, select appropriate fasteners.

2.3.1 Framing and Miscellaneous Lumber (including nailers, blocking, sleepers, and furring)

a. To Concrete Masonry Units, Brick, and Concrete:
   1. Multiset or wedge anchors for attachment to concrete.
   2. Sleeve anchors for attachment to masonry and tile.
   3. Cast-in-place bolts.
   4. Self-Drilling Fasteners: Hex or Flat head, No. 1/4 x 2-3/4", spaced 16 inches oc.

b. To Metal Deck:
   1. Oval head, Type S point self-drilling screw (18-gage maximum drilling capacity) with Hi-Lo threads. No. 11-16 x 2-1/4-", spaced 12 inches oc, two fasteners per width.

c. To Steel Angles, Plates:
   1. Bolts: 3/8-inch-diameter minimum, two per width, spaced 16 inches oc, countersink head, two washers per bolt.
   2. Self-Drilling Screws: Header Teks/4, reamer wings, phillips flat head, No. 12-24 x 2-1/2", spaced 12 inches oc.

d. To Lumber:
   1. Common Nails: Size as required to penetrate substrate 1-1/4-inch minimum.
   2. Bolts: Hexagon head, 3/8-inch-diameter minimum, two per width, spaced 16 inches oc, two washers per bolt.
   3. Lag Bolts: 3/8-inch-diameter minimum x length required to penetrate substrate 1-1/2-inch minimum. One washer per bolt, two bolts per width, spaced 16 inches oc.

e. Plywood (except prefinished paneling)
   1. Wood Screws: Flat head, slotted, size as required to penetrate substrate 1-inch minimum.

f. To Steel:
   1. Structural Steel: Plymetal Teks/3 self-drilling fasteners;

reamer wings, pilot point, (wafer head, No. 10-24 x 1-7/16", for steel to 0.175-inch thickness) (flat head No. 2 12-24 x 2-1/2" for steel to 0.250 inch), spaced 12 inches oc.
2. Light-Gauge Steel Studs: Self-drilling fasteners; pilot point, trumpet head.
3. Bolts: 5/16-inch-diameter minimum.

g. To Concrete Masonry Units or Brick:
1. Sleeve Expansion Anchors: Hex nut, 3/8-inch-diameter minimum, spaced 16 inches oc.
2. Cast-in-Place Bolts: As indicated.
3. Tapcon Concrete Anchors: Hex or Flat head, No. 1/4 x 1-3/4".

h. To Concrete:
1. Stud Expansion Anchors: Size and thickness as required by thickness and size of plywood, but not less than 3/8-inch diameter.
i. Steel Angles or Plate:
1. To Concrete Masonry Units, Brick, or Concrete:
a. Stud Expansion Anchors: Size and thickness as required by thickness and size of steel.
b. Cast-in-Place Bolts: 1/2-inch-diameter minimum, threaded one end, length as indicated.

c. Tapcon Concrete Anchors: Hex or Flat head, No. 1/4 x (1-1/4") (1-3/4").

j. To Steel:
1. Bolts and Welding: Specified in SECTION 05120.
2. Teks/5 Self-Drilling Fasteners: Hex head (1/2-inch steel-drilling capability), No. 12-24 x 1-1/2".

k. Sheet Metal:
1. To Wood:
a. Self-Drilling Fasteners: Slotted, hex or pan head.
b. Wood Screws: Round head.
2. To Steel up to 0.175 inch:
a. Teks/2 Self-Drilling Sheet Metal Screws: Hex head, 10-16 x 3/4" hex washer head, spaced 6 inches oc.
3. To Steel up to 0.25 inch:
a. Teks/4 Self-Drilling Sheet Metal Screws: Hex head, 12-24 x 7/8" hex washer head, spaced 6 inches oc.
4. To Concrete Masonry Units, Brick, or Concrete:
a. Tapcon Concrete Anchors: Slotted hex head.
5. To Sheet Metal:
a. Teks/2 Self-Drilling Sheet Metal Screws: Hex head 10-16 x 1/2", spaced 6 inches oc.

l. Miscellaneous Equipment:
1. Includes mounting clips for conduit and pipe; hanger straps; junction, control and switch boxes; metal furring channels, hanger tie wires.
2. To Concrete Masonry Units, Brick, or Concrete:
a. Tapcon Concrete Anchors: Slotted hex head.
3. To Steel:
a. Self-drilling Fasteners with Wings, Pilot Point, Slotted Hex Head:
1. 12-14 x 3/4" Teks/3 (drilling capacity up to 0.210 inch).

2. 12-24 x 7/8" Teks/4 (drilling capacity up to 0.250 inch).
3. 12-24 x 1-1/4" Teks/5 (drilling capacity up to 0.500 inch).

PART 3 EXECUTION

3.1 PREPARATION

Inspect areas to receive anchors or fasteners for defects that would affect proper installation and strength capacities. Correct all defects.

3.2 INSTALLATION

Install fasteners conforming to manufacturer's recommended procedures. Space fasteners as indicated and specified. If not indicated, space as required to adequately support loads to be imposed. Space expansion anchors in accordance with EAMI standards. Place washers under all bolt heads and nuts. Tighten fasteners to proper tension.

-- End of Section --

SECTION 07220

ROOF INSULATION
10/01

PART 1 GENERAL

1.1 REFERENCES

The publications listed below form a part of this specification to the extent referenced. The publications are referred to in the text by basic designation only.

AMERICAN SOCIETY FOR TESTING AND MATERIALS (ASTM)

ASTM C 728	(1997) Perlite Thermal Insulation Board
ASTM C 1289	(1998) Faced Rigid Cellular Polyisocyanurate Thermal Insulation Board

FACTORY MUTUAL ENGINEERING AND RESEARCH (FM)

FM P7825a	(1998) Approval Guide Fire Protection

UNDERWRITERS LABORATORIES (UL)

UL Bld Mat Dir	(1999) Building Materials Directory

1.2 SUBMITTALS

Government approval is required for submittals with a "G" designation; submittals not having a "G" designation are for information only. When used, a designation following the "G" designation identifies the office that will review the submittal for the Government. The following shall be submitted in accordance with Section 01330 SUBMITTAL PROCEDURES:

SD-03 Product Data

Application of Insulation; G

Insulation manufacturer's recommendations for the application and installation of insulation.

SD-07 Certificates

Insulation; G

Certificate attesting that the expanded perlite and polyisocyanurate insulation contains recovered material and showing estimated percent of recovered material.

1.3 STORAGE OF MATERIALS

Insulation materials shall be stored in accordance with manufacturer's instructions. Insulation, base sheet, and felt shall be kept dry at all times, before, during, and after delivery to the site and shall be stored in an enclosed building or in a closed trailer. Wet insulation, wet base

sheet or wet felt shall be permanently removed from the site. Felts shall be stacked on end one level high. Felt rolls shall be maintained at a temperature above 50 degrees F for 24 hours immediately before laying.

1.4 FIRE CLASSIFICATION

Insulation shall have been tested as part of a roof construction assembly of the type used in this project, and the construction shall be listed as Fire-Classified in UL Bld Mat Dir or Class I in FM P7825a.

PART 2 PRODUCTS

2.1 INSULATION

Insulation shall be a standard product of the manufacturer and shall be factory marked with the manufacturer's name or trade mark, the material specification number, the R-value at 75 degrees F, and the thickness. Minimum thickness shall be as recommended by the manufacturer. Boards shall be marked individually. The thermal resistance of insulation shall be not less than the R-value (R-30) shown on the drawings. The insulation manufacturing process shall not include chlorofluoro carbons (CFC) or formaldehydes. Insulation shall be one, or a combination of the following materials:

2.1.1 Expanded-Perlite Insulation Board (Tapered Tile)

ASTM C 728 with a minimum recovered material of the expanded perlite portion of the board.

2.1.2 Polyisocyanurate

ASTM C 1289, Type I, or ASTM C 1289 Type II, having minimum recovered material content by weight of the polyisocyanurate portion of the board.

2.2 FASTENERS

Fasteners shall be as specified in Section 07510 BUILT UP ROOFING.

2.3 WOOD NAILERS

Wood nailers shall conform to Section 06100 ROUGH CARPENTRY, including preservative treatment. Edge nailers shall be not less than nominal 6 inches wide and of thickness to finish flush with the top surface of the insulation. Surface mounted nailers shall be a nominal 3 inches wide by the full thickness of the insulation.

PART 3 EXECUTION

3.1 COORDINATION REQUIREMENTS

Insulation and roofing membrane shall be finished in one operation up to the line of termination at the end of each day's work. Completed sections shall be glaze coated when more than one day is required to finish the roofing. Phased construction will not be permitted.

3.2 ENVIRONMENTAL CONDITIONS

The temperature of the roofing materials shall be as required by the manufacturer. Air temperature shall be above 40 degrees F and there shall

be no visible ice, frost, or moisture on the roof deck when the insulation and roofing are installed. Wind conditions shall be suitable for installation of insulation: Wind chill may affect the proper application temperatures of materials; hot materials may be blown about, creating safety dangers; insulation boards may become difficult and hazardous to handle; wrappers, coverings, and other debris may become airborne, and possibly contaminate laps and seams.

3.3 SUBSTRATE PREPARATION

The substrate construction of any bay or section of the building shall be completed before insulation work is begun thereon. Vents and other items penetrating the roof shall be secured in position and properly prepared for flashing. Substrate surface shall be smooth, clean, and dry at time of application.

3.4 INSTALLATION OF WOOD NAILERS

Nailers shall be secured to cast-in-place deck materials by not less than 3/8 inch diameter anchors embedded in the deck not over 47 inches on centers. Nailers shall be secured to precast deck materials and to steel decks as indicated. Bolt anchors shall have nuts and washers countersunk, and bolts shall be cut flush with top of nailer. Powder-actuated fasteners, sized and spaced for nailer anchorage equivalent to that specified and indicated, may be used when approved. Surface mounted nailers shall be installed parallel with the roof slope and shall be spaced not over 47 inches face-to-face, except that where the insulation units are less than 47 inches in length the nailers shall be spaced to minimize cutting of the insulation. On sloped roofs exceeding 3/4 inch per foot for modified bituminous systems and 1 inch per foot for BUR systems, nailers shall be installed in accordance with the recommendations of the membrane system manufacturer.

3.5 APPLICATION OF INSULATION

Insulation shall be laid in two or more layers. Units of insulation shall be laid in courses parallel with the roof slope. End joints shall be staggered. Insulation shall be cut to fit neatly against adjoining surfaces. Joints between insulation boards shall not exceed 1/4 inch. Joints in successive layers shall be staggered with respect to joints of preceding layer. Where insulation is applied over steel deck, long edge joints shall continuously bear on surfaces of the steel deck. Insulation which can be readily lifted after installation is not considered to be adequately secured. Insulation shall be applied so that all roof insulation applied each day is waterproofed the same day. Phased construction will not be permitted. Application of impermeable faced insulation shall be performed without damage to the facing.

3.5.1 Mechanical Fastening

Method of attachment shall be in accordance with recommendations of the insulation manufacturer and requirements specified.

3.5.2 Steel Decks

All steel decks shall be insulated before receiving a roof membrane. Uninsulated steel decks shall have insulation applied to span the steel deck flutes and to act as an underlayment for the roof membrane. First layer of insulation on steel deck shall be compatible with mechanical

fastening and shall meet fire resistant requirements.

3.5.3 Foam Insulation

Polyisocyanurate foam insulation shall be isolated from built-up roof and modified bitumen membrane by a separate perlite board.

3.5.4 Protection Requirements

The insulation shall be kept dry at all times. Insulation boards shall not be kicked into position. Exposed edges of the insulation shall be protected by cutoffs at the end of each work day or whenever precipitation is imminent. Cutoffs shall be 2 layers of bituminous-saturated felt set in plastic bituminous cement. Cutoffs shall be removed when work is resumed. Edges of insulation at open spaces between insulation and parapets or other walls and spaces at curbs, scuttles, and expansion joints, shall be protected until permanent roofing and flashing is applied. Storing, walking, wheeling, or trucking directly on insulation or on roofed surfaces will not be permitted. Smooth, clean board or plank walkways, runways, and platforms shall be used, as necessary to distribute weight to conform to a 20 psf live load limit.

-- End of Section --

SECTION 07412

NON-STRUCTURAL METAL ROOFING
10/01

PART 1 GENERAL

1.1 REFERENCES

The publications listed below form a part of this specification to the extent referenced. The publications are referred to in the text by basic designation only.

AMERICAN SOCIETY FOR TESTING AND MATERIALS (ASTM)

ASTM A 463/A 463M	(2000) Steel Sheet, Aluminum-Coated, by the Hot-Dip Process
ASTM A 653/A 653M	(2000) Steel Sheet, Zinc-Coated (Galvanized) or Zinc-Iron Alloy-Coated (Galvannealed) by the Hot-Dip Process
ASTM A 792/A 792M	(1999) Steel Sheet, 55% Aluminum-Zinc Alloy-Coated by the Hot-Dip Process
ASTM C 518	(1998) Steady-State Heat Flux Measurements and Thermal Transmission Properties by Means of the Heat Flow Meter Apparatus
ASTM C 1289	(1998) Faced Rigid Cellular Polyisocyanurate Thermal Insulation Board
ASTM D 522	(1993a) Mandrel Bend Test of Attached Organic Coatings
ASTM D 523	(1989; R 1999) Specular Gloss
ASTM D 610	(1995) Evaluating Degree of Rusting on Painted Steel Surfaces
ASTM D 714	(1987; R 1994el) Evaluating Degree of Blistering of Paints
ASTM D 968	(1993) Abrasion Resistance of Organic Coatings by Falling Abrasive
ASTM D 1308	(1987; R 1998) Effect of Household Chemicals on Clear and Pigmented Organic Finishes
ASTM D 1654	(1992) Evaluation of Painted or Coated Specimens Subjected to Corrosive Environments
ASTM D 2244	(1995) Calculation of Color Differences from Instrumentally Measured Color Coordinates

ASTM D 2247	(1999) Testing Water Resistance of Coatings in 100% Relative Humidity
ASTM D 2794	(1993; R 1999el) Resistance of Organic Coatings to the Effects of Rapid Deformation (Impact)
ASTM D 3359	(1997) Measuring Adhesion by Tape Test
ASTM D 4214	(1998) Evaluating Degree of Chalking of Exterior Paint Films
ASTM D 4397	(1996) Polyethylene Sheeting for Construction, Industrial, and Agricultural Applications
ASTM D 5894	(1996) Standard Practice for Cyclic Salt Fog/UV Exposure of Painted Metal, (Alternating Exposures in a Fog/Dry Cabinet and a UV/Condensation Cabinet)
ASTM E 84	(2000a) Surface Burning Characteristics of Building Materials

UNDERWRITERS LABORATORIES (UL)

UL 580	(1994; Rev thru Feb 1998) Tests for Uplift Resistance of Roof Assemblies

1.2 SUBMITTALS

Government approval is required for submittals with a "G" designation; submittals not having a "G" designation are for information only. When used, a designation following the "G" designation identifies the office that will review the submittal for the Government. The following shall be submitted in accordance with Section 01330 SUBMITTAL PROCEDURES:

SD-02 Shop Drawings

Metal Roofing; G,

a. Drawings consisting of catalog cuts, flashing details, erection drawings, shop coating and finishing specifications, and other data as necessary to clearly describe materials, sizes, layouts, construction details, fasteners, and erection. Drawings shall be provided by the metal roofing manufacturer.

b. Drawings showing the UL 580, Class 90 tested roof system assembly.

SD-04 Samples

Accessories; G

One sample of each type of flashing, trim, fascia, closure, cap and similar items. Size shall be sufficient to show construction

and configuration.

Roof Panels; G

One piece of each type and finish to be used, 9 inches long, full width.

Fasteners and Subpurlins; G

Two samples of each type to be used with statement regarding intended use. If so requested, random samples of screws, bolts, nuts, and washers as delivered to the jobsite shall be taken in the presence of the Contracting Officer and provided to the Contracting Officer for testing to establish compliance with specified requirements.

Gaskets and Insulating Compounds; G

Two samples of each type to be used and descriptive data.

Sealant; G

One sample, approximately 1 pound, and descriptive data.

SD-07 Certificates

Roof Panels; G
Installation; G
Accessories; G

Certificates attesting that the panels and accessories conform to the specified requirements. Certificate for the roof assembly shall certify that the assembly complies with the material and fabrication requirements specified and is suitable for the installation at the indicated design slope. Certified laboratory test reports showing that the sheets to be furnished are produced under a continuing quality control program and that at least 3 representative samples of similar material to that which will be provided on this project have been previously tested and have met the quality standards specified for factory color finish.

Insulation; G

Certificate attesting that the polyisocyanurate insulation furnished for the project contains recovered material, and showing an estimated percent of such recovered material.

Installer; G

Certification of installer.

Warranties; G

At the completion of the project, signed copies of the 5-year Warranty for Non-Structural Metal Roofing System, a sample copy of which is attached to this section, and the 20-year Manufacturer's Material and Weathertightness Warranties.

1.3 GENERAL REQUIREMENTS

The Contractor shall furnish a commercially available roofing system which satisfies the specified design and additional requirements contained herein. The roofing system shall be provided by the Contractor as a complete system, as tested and approved in accordance with UL 580. Roof panels, components, transitions, accessories, and assemblies shall be supplied by the same roofing system manufacturer.

1.3.1 Non-Structural Metal Roof System

The Non-Structural Metal Roof System covered under this specification shall include the entire roofing system; the metal roof panels, subpurlins, fasteners, connectors, roof securement components, and assemblies tested and approved in accordance with UL 580. The system shall be installed on a substrate specified in Section 05300. In addition, the system shall consist of panel finishes, slip sheet, insulation, vapor retarder, all accessories, components, and trim and all connections with roof panels. This includes roof penetration items such as vents, curbs, skylights; interior or exterior gutters and downspouts, eaves, ridge, hip, valley, rake, gable, wall, or other roof system flashings installed and any other components specified within this contract to provide a weathertight roof system; and items specified in other sections of the specifications that are part of the system.

1.3.2 Manufacturer

The non-structural metal roofing system shall be the product of a manufacturer who has been in the practice of manufacturing metal roofs for a period of not less than 3 years and has been involved in at least five projects similar in size and complexity to this project.

1.3.3 Installer

The installer shall be certified by the metal roof manufacturer to have experience in installing at least three projects that are of comparable size, scope and complexity as this project for the particular roof system furnished. The installer may be either employed by the manufacturer or be an independent installer.

1.4 DESIGN LOADS

Non-structural Metal Roof System assemblies shall be tested as defined in UL 580 and shall be capable of resisting the wind uplift pressures shown on the contract drawings or, as a minimum, shall be approved to resist wind uplift pressures of UL 580, Class 90.

1.5 PERFORMANCE REQUIREMENTS

The metal roofing system supplied shall conform to the roof slope, the underlayment, and uplift pressures shown on the contract drawings. The Contractor shall furnish a commercially available roofing system which satisfies all the specified requirements.

1.6 DELIVERY AND STORAGE

Materials shall be delivered to the site in a dry and undamaged condition and stored out of contact with the ground. Materials shall be covered with weather tight coverings and kept dry. Material shall not be covered with plastic where such covering will allow sweating and condensation. Plastic

may be used as tenting with air circulation allowed. Storage conditions shall provide good air circulation and protection from surface staining.

1.7 WARRANTIES

The Non-Structural Metal Roofing System shall be warranted as outlined below. Any emergency temporary repairs conducted by the owner shall not negate the warranties.

1.7.1 Contractor's Weathertightness Warranty

The Non-Structural Metal Roofing System shall be warranted by the Contractor on a no penal sum basis for a period of five years against material and workmanship deficiencies; system deterioration caused by exposure to the elements and/or inadequate resistance to specified service design loads, water leaks, and wind uplift damage. The roofing covered under this warranty shall include the entire roofing system, including but not limited to, the roof panels,subpurlins, fasteners, connectors, roof securement components, and assemblies tested and approved in accordance with UL 580. In addition, the system shall consist of panel finishes, slip sheet, insulation, vapor retarder, all accessories, components, and trim and all connections with roof panels. This includes roof penetration items such as vents, curbs, skylights; interior or exterior gutters and downspouts; eaves, ridge, hip, valley, rake, gable, wall, or other roof system flashings installed and any other components specified within this contract to provide a weathertight roof system; and items specified in other sections of the specifications that are part of the roof system. All material and workmanship deficiencies, system deterioration caused by exposure to the elements and/or inadequate resistance to service design loads, water leaks and wind uplift damage shall be repaired as approved by the Contracting Officer. See the attached Contractor's required warranty for issue resolution of warrantable defects. This warranty shall warrant and cover the entire cost of repair or replacement, including all material, labor, and related markups. The Contractor shall supplement this warranty with written warranties from the installer and system manufacturer, which shall be submitted along with Contractor's warranty; however, the Contractor shall be ultimately responsible for this warranty. The Contractor's written warranty shall be as outlined in attached WARRANTY FOR NON-STRUCTURAL METAL ROOF SYSTEM, and shall start upon final acceptance of the facility. It is required that the Contractor provide a separate bond in an amount equal to the installed total roofing system cost in favor of the owner (Government) covering the Contractor's warranty responsibilities effective throughout the 5 year Contractor's warranty period for the entire roofing system as outlined above.

1.7.2 Manufacturer's Material Warranties

The Contractor shall furnish, in writing, the following manufacturer's material warranties which cover all Non-Structural Metal Roofing System components such as roof panels, flashing, accessories, and trim, fabricated from coil material:

a. A manufacturer's 20 year material warranty warranting that the aluminum, zinc-coated steel, aluminum-zinc alloy coated steel or aluminum-coated steel as specified herein will not rupture, fail structurally, or perforate under normal atmospheric conditions at the site. Liability under this warranty shall be limited exclusively to the cost of either repairing or replacing nonconforming, ruptured, perforated, or structurally failed coil material.

b. A manufacturer's 20 year exterior material finish warranty warranting that the factory color finish, under normal atmospheric conditions at the site, will not crack, peel, or delaminate; chalk in excess of a numerical rating of 8 when measured in accordance with ASTM D 4214; or fade or change colors in excess of 5 NBS units as measured in accordance with ASTM D 2244. Liability under this warranty is exclusively limited to refinishing or replacing the defective coated coil material.

c. A roofing system manufacturer's 20 year system weathertightness warranty.

1.8 COORDINATION MEETING

A coordination meeting shall be held within 45 days after contract award for mutual understanding of the metal roofing system contract requirements. This meeting shall take place at the building site and shall include representatives from the Contractor, the roofing system manufacturer, the roofing supplier, the erector, the designer, and the Contracting Officer. All items required by paragraph SUBMITTALS shall be discussed, including applicable standard manufacturer shop drawings, and the approval process. The Contractor shall coordinate time and arrangements for the meeting.

PART 2 PRODUCTS

2.1 ROOF PANELS

Panels shall be aluminum-zinc coated steel and shall have a factory color finish. Length of sheets shall be sufficient to cover the entire length of any unbroken roof slope for slope lengths that do not exceed 30 feet. Sheets longer than 30 feet may be furnished if approved by the Contracting Officer. Width of sheets shall provide nominal 18 inches of coverage in place. Height of standing seams shall be not less than 2 inches. Seams of panels shall be so configured that when adjacent sheets are installed the seams shall be sealed utilizing mechanical seamers. The profile of the standing seams shall be Maxima 216 bead pencil rib as manufactured by McElroy Metals, Inc. or approved equal (of similar profile). Design provisions shall be made for thermal expansion and contraction consistent with the type of system to be used. All sheets shall be either square-cut or miter-cut. The ridge cap shall be installed as recommended by the metal roofing manufacturer.

2.1.1 Steel Panels

Zinc-coated steel conforming to ASTM A 653/A 653M; aluminum-zinc alloy coated steel conforming to ASTM A 792/A 792M, AZ 55 coating; or aluminum-coated steel (Galvalume) conforming to ASTM A 463/A 463M, Type 2, coating designation T2 65. Uncoated roof panels shall be a minimum 22 gauge. Panels shall be within 95 percent of the nominal thickness. Prior to shipment, mill finish panels shall be treated with a passivating chemical and oiled to inhibit the formation of oxide corrosion products. Panels that have become wet during shipment and have started to oxidize shall be rejected. The hem end of seams shall be closed. Field formed panels will not be acceptable.

2.2 ACCESSORIES

Accessories shall be compatible with the roofing furnished. Flashing, trim, metal closure strips, caps, gutters and downspouts as specified in

Section 07600 GENERAL SHEET METAL WORK, and similar metal accessories shall be not less than the minimum thicknesses specified for roof panels. Exposed metal accessories shall be finished to match the panels furnished. Molded closure strips shall be bituminous-saturated fiber, closed-cell or solid-cell synthetic rubber or neoprene, or polyvinyl chloride premolded to match configuration of the panels and shall not absorb or retain water.

2.3 CONCEALED ANCHOR CLIPS

Concealed anchor clips shall be the same as the tested roofing system. Clip bases shall have factory punched or drilled holes for attachment. Clips shall be made from multiple pieces with the allowance for the total thermal movement required to take place within the clip.

2.4 FASTENERS

Fasteners for roof panels shall be zinc-coated steel, aluminum, or nylon capped steel, type and size as recommended by the manufacturer to meet the performance requirements. Fasteners for accessories shall be the manufacturer's standard. Exposed roof fasteners limited to accessories and shall be gasketed or have gasketed washers on the exterior side of the roofing to waterproof the fastener penetration. Washer material shall be compatible with the panels; and gasketed portion of fasteners or washers shall be neoprene or other equally durable elastomeric material approximately 1/8 inch thick.

2.4.1 Screws

Screws for attaching anchor devices shall be not less than No. 14. Actual screw pull out test results shall be performed for the actual material gage and yield strength of the structural purlins or subpurlins to which the clip is to be anchored/attached. Other screws shall be as recommended by the manufacturer to meet the strength design requirements of the panels.

2.4.2 Bolts

Bolts shall be not less than 1/4 inch diameter, shouldered or plain shank as required, with locking washers and nuts.

2.4.3 Structural Blind Fasteners

Blind screw-type expandable fasteners shall be not less than 6 mm diameter. Blind (pop) rivets shall be not less than 7 mm diameter.

2.5 SUBPURLINS

Cold formed supporting structural members/subpurlins shall have a minimum thickness of .0625 inch and a minimum tensile yield strength of 50 ksi. Hot rolled structural members shall have a minimum thickness of 1/4 inch and a minimum tensile yield strength of 36 ksi. Subpurlins shall be galvanized. Subpurlins shall fit in the bottom flute of the steel roof deck except at roof deck transitions where approved by Contracting Officer. Depth or height of subpurlin shall be determined by roof insulation thickness.

2.6 FACTORY COLOR FINISH

Panels shall have a factory applied polyvinylidene fluoride finish (Kynar) on the exposed side. The exterior finish shall consist of a baked-on

topcoat with an appropriate prime coat. Color shall match the color indicated on the drawings for each building. The exterior coating shall be a nominal 1 mil thickness consisting of a topcoat of not less than 0.8 mil dry film thickness and the paint manufacturer's recommended primer of not less than 0.2 mil thickness. The exterior color finish shall meet the test requirements specified below. Reference drawing and SD-04 for color samples.

2.6.1 Cyclic Salt Fog/UV Test

A sample of the sheets shall withstand a cyclic corrosion test for a minimum of 2016 hours in accordance with ASTM D 5894, including the scribe requirement in the test. Immediately upon removal of the panel from the test, the coating shall receive a rating of not less than 10, no blistering, as determined by ASTM D 714; 10, no rusting, as determined by ASTM D 610; and a rating of 6, over 1/16 to 1/8 inch failure at scribe, as determined by ASTM D 1654.

2.6.2 Formability Test

When subjected to testing in accordance with ASTM D 522 Method B, 1/8 inch diameter mandrel, the coating film shall show no evidence of fracturing to the naked eye.

2.6.3 Accelerated Weathering, Chalking Resistance and Color Change

A sample of the sheets shall be tested in accordance with ASTM D 4587, test condition for 1000 total hours. The coating shall withstand the weathering test without cracking, peeling, blistering, loss of adhesion of the protective coating, or corrosion of the base metal. Protective coating that can be readily removed from the base metal with tape in accordance with ASTM D 3359, Test Method B, shall be considered as an area indicating loss of adhesion. Following the accelerated weathering test, the coating shall have a chalk rating not less than No. 8 in accordance with ASTM D 4214 test procedures, and the color change shall not exceed 5 CIE or Hunter Lab color difference (delta E) units in accordance with ASTM D 2244. For sheets required to have a low gloss finish, the chalk rating shall be not less than No. 6 and the color difference shall be not greater than 7 units.

2.6.4 Humidity Test

When subjected to a humidity cabinet test in accordance with ASTM D 2247 for 1000 hours, a scored panel shall show no signs of blistering, cracking, creepage or corrosion.

2.6.5 Impact Resistance

Factory-painted sheet shall withstand direct and reverse impact in accordance with ASTM D 2794 0.500 inch diameter hemispherical head indenter, 1.5 times the metal thickness in mils, expressed in inch-pounds, with no cracking.

2.6.6 Abrasion Resistance Test

When subjected to the falling sand test in accordance with ASTM D 968, Method A, the coating system shall withstand a minimum of 80 liters of sand before the appearance of the base metal. The term "appearance of base metal" refers to the metallic coating on steel or the aluminum base metal.

2.6.7 Specular Gloss

Finished roof surfaces shall have a specular gloss value of 10 or less at an angle of 85 degrees when measured in accordance with ASTM D 523.

2.6.8 Pollution Resistance

Coating shall show no visual effects when covered spot tested in a 10 percent hydrochloric acid solution for 24 hours in accordance with ASTM D 1308.

2.7 UNDERLAYMENTS

2.7.1 Rubberized Underlayment

Rubberized underlayment shall be equal to "Ice and Water Shield" as manufactured by Grace Construction Products, "Winterguard" as manufactured by CertainTeed Corporation, or "Weather Watch Ice and Water Barrier" as manufactured by GAF Building Materials Corporation.

2.8 INSULATION

Thermal resistance of insulation shall be not less than the R-values shown on the contract drawings. Minimum insulation thickness shall be 4 inches. R-values shall be determined at a mean temperature of 75 degrees F in accordance with ASTM C 518. Insulation shall be a standard product with the insulation manufacturer, factory marked or identified with insulation manufacturer's name or trademark and R-value. Identification shall be on individual pieces or individual packages. Insulation, including facings, shall have a flame spread not in excess of 25 and a smoke developed rating not in excess of 450 when tested in accordance with ASTM E 84. The stated R-value of the insulation shall be certified by an independent Registered Professional Engineer if tests are conducted in the insulation manufacturer's laboratory. Recyclable materials shall conform to EPA requirements in accordance with Section 01670 RECYCLED/RECOVERED MATERIALS.

2.8.1 Rigid Board Insulation for Use Above a Roof Deck

2.8.1.1 Polyisocyanurate

Polyisocyanurate insulation shall conform to ASTM C 1289, Type I, Class 2 (having a minimum recovered material content of 9 percent by weight of core material in the polyisocyanurate portion). For impermeable faced polyisocyanurate (Ex: aluminum foil) the maximum design R-value per 1 inch of insulation used shall be 7.

2.9 SEALANT

Sealant shall be an elastomeric type containing no oil or asphalt. Exposed sealant shall be colored to match the applicable building color and shall cure to a rubberlike consistency. Sealant placed in the roof panel standing seam ribs shall be provided in accordance with the manufacturer's recommendations.

2.10 GASKETS AND INSULATING COMPOUNDS

Gaskets and insulating compounds shall be nonabsorptive and suitable for insulating contact points of incompatible materials. Insulating compounds shall be nonrunning after drying.

2.11 VAPOR RETARDER

2.11.1 Vapor Retarders Separate from Insulation

Vapor retarder material shall be polyethylene sheeting conforming to ASTM D 4397. A single ply of 10 mil polyethylene sheet; or, at the Contractor's option, a double ply of 6 mil polyethylene sheet shall be used. A fully compatible polyethylene tape which has equal or better water vapor control characteristics than the vapor retarder material shall be provided. A cloth industrial duct tape in a utility grade shall also be provided to use as needed to protect the vapor retarder from puncturing.

PART 3 EXECUTION

3.1 INSTALLATION

Installation shall be in accordance with the manufacturer's erection instructions and drawings. Dissimilar materials which are not compatible when contacting each other shall be insulated by means of gaskets or insulating compounds. Improper or mislocated drill holes shall be plugged with an oversize screw fastener and gasketed washer; however, sheets with an excess of such holes or with such holes in critical locations shall not be used. Exposed surfaces and edges shall be kept clean and free from sealant, metal cuttings, hazardous burrs, and other foreign material. Stained, discolored, or damaged sheets shall be removed from the site.

3.1.1 Subpurlins

Coordinate size of subpurlins with the bottom flute of the steel roof deck width. All subpurlns shall be located in the bottom flute of steel roof deck, anchored through steel roof deck to structural framing members (steel joist and beams) with bolts or screws. Direct attachment of subpurlins or roof panel fasteners to the steel roof deck is not permitted. The subpurlin spacing shall be as required to resist the wind uplift pressures shown on the contract drawings.

3.1.2 Roofing

Side laps shall be laid away from the prevailing winds. Side and end lap distances, joint sealing, and fastening and spacing of fasteners shall be in accordance with manufacturer's standard practice. Spacing of exposed fasteners shall present an orderly appearance. Side laps and end laps of roof panels and joints at accessories shall be sealed. Fasteners shall be driven normal to the surface. Method of applying joint sealant shall conform to the manufacturer's recommendation to achieve a complete weathertight installation. Accessories shall be fastened into substrate, except as otherwise approved. Closure strips shall be provided as indicated and where necessary to provide weathertight construction.

3.1.3 Field Forming of Roof Panels for Unique Areas

When roofing panels are formed from factory-color-finished steel coils at the project site, the same care and quality control measures that are taken in shop forming of roofing panels shall be observed. Rollformer (machine seamed) shall be operated by the metal roofing manufacturer's approved installer. In cold weather conditions, preheating of the steel coils to be field formed shall be performed as necessary just prior to the rolling operations.

3.1.4 Moisture Barrier/Slip Sheet Panel Underlayment

Underlayment shall be installed under the roof panel accordance with the manufacturer's written instructions. The underlayments shall ensure that any water that penetrates below the metal roofing panels will drain outside of the building envelope.

3.1.5 Concealed Anchor Clips

Concealed anchor clips shall be fastened directly to the framing members. The maximum distance, parallel to the seams, between clips shall be 30 inches on center at the corner, edge, and ridge zones, and 60 inches maximum on centers for the remainder of the roof.

3.2 INSULATION INSTALLATION

Insulation shall be installed as indicated and in accordance with manufacturer's instructions. Insulation shall be continuous over entire roof surface. Where expansion joints, terminations, and other connections are made, the cavity shall be filled with batt insulation and vapor retarder providing equivalent R-Value and perm rating as remaining insulation.

3.3 VAPOR RETARDER INSTALLATION

3.3.1 Polyethylene Vapor Retarder

The polyethylene vapor retarder membrane shall be installed over the entire roof deck surface as recommended by roofing manufacturer. A fully compatible polyethylene tape shall be used to seal the edges of the sheets to provide a vapor tight membrane. Sheet edges shall be lapped not less than 6 inches. Sufficient material shall be provided to avoid inducing stresses in the sheets due to stretching or binding. All tears or punctures that are visible in the finished surface at any time during the construction process shall be sealed with polyethylene tape.

3.4 CLEAN-UP AND TOUCH-UP

Exposed roof system shall be cleaned at completion of installation. Debris that could cause discoloration and harm to the panels, flashings, closures, and other accessories shall be removed. Grease and oil films, excess sealants, and handling marks shall be removed and the work shall be scrubbed clean. Exposed metal surfaces shall be free of dents, creases, waves, scratch marks, and solder or weld marks. Immediately upon detection, abraded or corroded spots on shop-painted surfaces shall be wire brushed and touched up with the same material used for the shop coat. Factory color finished surfaces shall be touched up with the manufacturer's recommended touch up paint.

3.5 CONTRACTOR INSPECTION

The Contractor shall obtain and utilize the services of an independent, registered roofing consultant certified by the National Roofing Association for experience in inspecting roofs of this type and to ensure that the system is installed in accordance with the manufacturer's recommendations, the contract plans and specifications, and the approved shop drawings. The use of such a consultant is dependent upon approval of his/her qualifications by the Contracting Officer's Representative. The Contractor shall submit the consultant's qualifications for approval a minimum of 30

calendar days prior to the start of roof construction.

The Contractor shall obtain a daily written report from the consultant each day that he/she is on site. The consultant shall sign the report, and the original shall be presented to the Contracting Officer's Representative within one calendar day of the completion of each day's work. The report shall state whether or not the condition and quality of the materials used and the installation of the system were in accordance with the manufacturer's recommendations, the contract plans and specifications, and the approved shop drawings. If anything connected with the materials used or the installation is unsatisfactory, the report shall state what corrective action has been taken or shall contain the consultant's recommendations for corrective action.

Upon completion of the roof construction work and before its final acceptance, the Contractor shall deliver to the Contracting Officer's Representative a notarized statement signed by a principal officer of the roofing system manufacturer's firm and by a principal officer of the roofing system manufacturer's firm and by a principal officer of the Contractor's own firm, stating that the materials used and the installation are satisfactory and in accordance with the manufacturer's recommendations, the contract plans and specifications, and the approved shop drawings.

3.6 CONTRACTOR WARRANTY

The contractor shall present to the Contracting Officer's Representative the following documents to include the CONTRACTOR'S FIVE (5) YEAR NO PENAL SUM WARRANTY FOR ARCHITECTURAL STANDING SEAM METAL ROOF SYSTEM with the construction company President's signature along with the warranty information described throughout Section 1.8 WARRANTIES.

CONTRACTOR'S FIVE (5) YEAR NO PENAL SUM WARRANTY
FOR
NON-STRUCTURAL METAL ROOF SYSTEM

FACILITY DESCRIPTION_____

BUILDING NUMBER:_____

CORPS OF ENGINEERS CONTRACT NUMBER:_____

CONTRACTOR

CONTRACTOR:_____

ADDRESS:_____

POINT OF CONTACT:_____

TELEPHONE NUMBER:_____

OWNER

OWNER:_____

ADDRESS:_____

POINT OF CONTACT:_____

TELEPHONE NUMBER:_____

CONSTRUCTION AGENT

CONSTRUCTION AGENT:_____

ADDRESS:_____

POINT OF CONTACT:_____

TELEPHONE NUMBER:_____

CONTRACTOR'S FIVE (5) YEAR NO PENAL SUM WARRANTY
FOR
NON-STRUCTURAL METAL ROOF SYSTEM
(continued)

THE NON-STRUCTURAL METAL ROOF SYSTEM INSTALLED ON THE ABOVE NAMED BUILDING IS WARRANTED BY _____ FOR A PERIOD OF FIVE (5) YEARS AGAINST WORKMANSHIP AND MATERIAL DEFICIENCES, WIND DAMAGE, STRUCTURAL FAILURE, AND LEAKAGE. THE NON-STRUCTURAL METAL ROOFING SYSTEM COVERED UNDER THIS WARRANTY SHALL INCLUDE, BUT SHALL NOT BE LIMITED TO, THE FOLLOWING: THE ENTIRE ROOFING SYSTEM, MANUFACTURER SUPPLIED FRAMING AND STRUCTURAL MEMBERS, METAL ROOF PANELS, FASTENERS, CONNECTORS, ROOF SECUREMENT COMPONENTS, AND ASSEMBLIES TESTED AND APPROVED IN ACCORDANCE WITH UL 580. IN ADDITION, THE SYSTEM PANEL FINISHES, SLIP SHEET, INSULATION, VAPOR RETARDER, ALL ACCESSORIES, COMPONENTS, AND TRIM AND ALL CONNECTIONS ARE INCLUDED. THIS INCLUDES ROOF PENETRATION ITEMS SUCH AS VENTS, CURBS, SKYLIGHTS; INTERIOR OR EXTERIOR GUTTERS AND DOWNSPOUTS; EAVES, RIDGE, HIP, VALLEY, RAKE, GABLE, WALL, OR OTHER ROOF SYSTEM FLASHINGS INSTALLED AND ANY OTHER COMPONENTS SPECIFIED WITHIN THIS CONTRACT TO PROVIDE A WEATHERTIGHT ROOF SYSTEM; AND ITEMS SPECIFIED IN OTHER SECTIONS OF THE SPECIFICATIONS THAT ARE PART OF THE NON-STRUCTURAL METAL ROOFING SYSTEM.

ALL MATERIAL DEFICIENCIES, WIND DAMAGE, STRUCTURAL FAILURE, AND LEAKAGE ASSOCIATED WITH THE NON-STRUCTURAL METAL ROOF SYSTEM COVERED UNDER THIS WARRANTY SHALL BE REPAIRED AS APPROVED BY THE CONTRACTING OFFICER. THIS WARRANTY SHALL COVER THE ENTIRE COST OF REPAIR OR REPLACEMENT, INCLUDING ALL MATERIAL, LABOR, AND RELATED MARKUPS. THE ABOVE REFERENCED WARRANTY COMMENCED ON THE DATE OF FINAL ACCEPTANCE ON _____ AND WILL REMAIN IN EFFECT FOR STATED DURATION FROM THIS DATE.

SIGNED, DATED, AND NOTARIZED (BY COMPANY PRESIDENT)

_____

(Company President) (Date)

CONTRACTOR'S FIVE (5) YEAR NO PENAL SUM WARRANTY
FOR
NON-STRUCTURAL METAL ROOFING SYSTEM
(continued)

THE CONTRACTOR SHALL SUPPLEMENT THIS WARRANTY WITH WRITTEN WARRANTIES FROM THE MANUFACTURER AND/OR INSTALLER OF THE NON-STRUCTURAL METAL ROOFING SYSTEM, WHICH SHALL BE SUBMITTED ALONG WITH THE CONTRACTOR'S WARRANTY. HOWEVER, THE CONTRACTOR WILL BE ULTIMATELY RESPONSIBLE FOR THIS WARRANTY AS OUTLINED IN THE SPECIFICATIONS AND AS INDICATED IN THIS WARRANTY EXAMPLE.

EXCLUSIONS FROM COVERAGE

1. NATURAL DISASTERS, ACTS OF GOD (LIGHTNING, FIRE, EXPLOSIONS, SUSTAINED WIND FORCES IN EXCESS OF THE DESIGN CRITERIA, EARTHQUAKES, AND HAIL).

2. ACTS OF NEGLIGENCE OR ABUSE OR MISUSE BY GOVERNMENT OR OTHER PERSONNEL, INCLUDING ACCIDENTS, VANDALISM, CIVIL DISOBEDIENCE, WAR, OR DAMAGE CAUSED BY FALLING OBJECTS.

3. DAMAGE BY STRUCTURAL FAILURE, SETTLEMENT, MOVEMENT, DISTORTION, WARPAGE, OR DISPLACEMENT OF THE BUILDING STRUCTURE OR ALTERATIONS MADE TO THE BUILDING.

4. CORROSION CAUSED BY EXPOSURE TO CORROSIVE CHEMICALS, ASH OR FUMES GENERATED OR RELEASED INSIDE OR OUTSIDE THE BUILDING FROM CHEMICAL PLANTS, FOUNDRIES, PLATING WORKS, KILNS, FERTILIZER FACTORIES, PAPER PLANTS, AND THE LIKE.

5. FAILURE OF ANY PART OF THE NON-STRUCTURAL METAL ROOF DUE TO ACTIONS BY THE OWNER TO INHIBIT FREE DRAINAGE OF WATER FROM THE ROOF AND GUTTERS AND DOWNSPOUTS OR ALLOW PONDING WATER TO COLLECT ON THE ROOF SURFACE. CONTRACTOR'S DESIGN SHALL INSURE FREE DRAINAGE FROM THE ROOF AND NOT ALLOW PONDING WATER.

6. THIS WARRANTY APPLIES TO THE NON-STRUCTURAL METAL ROOFING SYSTEM. IT DOES NOT INCLUDE ANY CONSEQUENTIAL DAMAGE TO THE BUILDING INTERIOR OR CONTENTS WHICH IS COVERED BY THE WARRANTY OF CONSTRUCTION CLAUSE INCLUDED IN THIS CONTRACT.

7. THIS WARRANTY CANNOT BE TRANSFERRED TO ANOTHER OWNER WITHOUT WRITTEN CONSENT OF THE CONTRACTOR; AND THIS WARRANTY AND THE CONTRACT PROVISIONS WILL TAKE PRECEDENCE OVER ANY CONFLICTS WITH STATE STATUTES.

**

CONTRACTOR'S FIVE (5) YEAR NO PENAL SUM WARRANTY
FOR
NON-STRUCTURAL METAL ROOF SYSTEM
(continued)

**REPORTS OF LEAKS AND ROOF SYSTEM DEFICIENCIES SHALL BE RESPONDED TO WITHIN 48 HOURS OF RECEIPT OF NOTICE, BY TELEPHONE OR IN WRITING, FROM EITHER THE OWNER OR CONTRACTING OFFICER. EMERGENCY REPAIRS TO PREVENT FURTHER ROOF LEAKS SHALL BE INITIATED IMMEDIATELY; A WRITTEN PLAN SHALL BE SUBMITTED FOR APPROVAL TO REPAIR OR REPLACE THIS ROOF SYSTEM WITHIN SEVEN (7) CALENDAR DAYS. ACTUAL WORK FOR PERMANENT REPAIRS OR REPLACEMENT SHALL BE STARTED WITHIN 30 DAYS AFTER RECEIPT OF NOTICE, AND COMPLETED WITHIN A REASONABLE TIME FRAME. IF THE CONTRACTOR FAILS TO ADEQUATELY RESPOND TO THE WARRANTY PROVISIONS, AS STATED IN THE CONTRACT AND AS CONTAINED HEREIN, THE CONTRACTING OFFICER MAY HAVE THE NON-STRUCTURAL METAL ROOF SYSTEM REPAIRED OR REPLACED BY OTHERS AND CHARGE THE COST TO THE CONTRACTOR.

IN THE EVENT THE CONTRACTOR DISPUTES THE EXISTENCE OF A WARRANTABLE DEFECT, THE CONTRACTOR MAY CHALLENGE THE OWNER'S DEMAND FOR REPAIRS AND/OR REPLACEMENT DIRECTED BY THE OWNER OR CONTRACTING OFFICER EITHER BY REQUESTING A CONTRACTING OFFICER'S DECISION UNDER THE CONTRACT DISPUTES ACT, OR BY REQUESTING THAT AN ARBITRATOR RESOLVE THE ISSUE. THE REQUEST FOR AN ARBITRATOR MUST BE MADE WITHIN 48 HOURS OF BEING NOTIFIED OF THE DISPUTED DEFECTS. UPON BEING INVOKED, THE PARTIES SHALL, WITHIN TEN (10) DAYS, JOINTLY REQUEST A LIST OF FIVE (5) ARBITRATORS FROM THE FEDERAL MEDIATION AND CONCILIATION SERVICE. THE PARTIES SHALL CONFER WITHIN TEN (10) DAYS AFTER RECEIPT OF THE LIST TO SEEK AGREEMENT ON AN ARBITRATOR. IF THE PARTIES CANNOT AGREE ON AN ARBITRATOR, THE CONTRACTING OFFICER AND THE PRESIDENT OF THE CONTRACTOR'S COMPANY WILL STRIKE ONE (1) NAME FROM THE LIST ALTERNATIVELY UNTIL ONE (1) NAME REMAINS. THE REMAINING PERSON SHALL BE THE DULY SELECTED ARBITRATOR. THE COSTS OF THE ARBITRATION, INCLUDING THE ARBITRATOR'S FEE AND EXPENSES, COURT REPORTER, COURTROOM OR SITE SELECTED, ETC., SHALL BE BORNE EQUALLY BETWEEN THE PARTIES. EITHER PARTY DESIRING A COPY OF THE TRANSCRIPT SHALL PAY FOR THE TRANSCRIPT. A HEARING WILL BE HELD AS SOON AS THE PARTIES CAN MUTUALLY AGREE. A WRITTEN ARBITRATOR'S DECISION WILL BE REQUESTED NOT LATER THAN 30 DAYS FOLLOWING THE HEARING. THE DECISION OF THE ARBITRATOR WILL NOT BE BINDING; HOWEVER, IT WILL BE ADMISSIBLE IN ANY SUBSEQUENT APPEAL UNDER THE CONTRACT DISPUTES ACT.

A FRAMED COPY OF THIS WARRANTY SHALL BE POSTED IN THE MECHANICAL ROOM OR OTHER APPROVED LOCATION DURING THE ENTIRE WARRANTY PERIOD.

-- End of Section --

SECTION 07413

METAL SOFFITS AND WALL PANELS
04/01

PART 1 GENERAL

1.1 REFERENCES

The publications listed below form a part of this specification to the extent referenced. The publications are referred to in the text by basic designation only.

ALUMINUM ASSOCIATION (AA)

AA Design Manual	(2000) Aluminum Design Manual: Specifications & Guidelines for Aluminum Structures

AMERICAN IRON AND STEEL INSTITUTE (AISI)

AISI Cold-Formed Mnl	(1996) Cold-Formed Steel Design Manual

AMERICAN SOCIETY FOR TESTING AND MATERIALS (ASTM)

ASTM A 653/A 653M	(2000) Steel Sheet, Zinc-Coated (Galvanized) or Zinc-Iron Alloy-Coated (Galvannealed) by the Hot-Dip Process
ASTM B 209	(1996) Aluminum and Aluminum-Alloy Sheet and Plate
ASTM D 522	(1993a) Mandrel Bend Test of Attached Organic Coatings
ASTM D 610	(1995) Evaluating Degree of Rusting on Painted Steel Surfaces
ASTM D 714	(1987; R 1994el) Evaluating Degree of Blistering of Paints
ASTM D 968	(1993) Abrasion Resistance of Organic Coatings by Falling Abrasive
ASTM D 1654	(1992) Evaluation of Painted or Coated Specimens Subjected to Corrosive Environments
ASTM D 2244	(1995) Calculation of Color Differences from Instrumentally Measured Color Coordinates
ASTM D 2247	(1999) Testing Water Resistance of Coatings in 100% Relative Humidity
ASTM D 2794	(1993; R 1999el) Resistance of Organic

	Coatings to the Effects of Rapid Deformation (Impact)
ASTM D 3359	(1997) Measuring Adhesion by Tape Test
ASTM D 4214	(1998) Evaluating Degree of Chalking of Exterior Paint Films
ASTM D 4587	(1991) Conducting Tests on Paint and Related Coatings and Materials Using a Fluorescent UV-Condensation Light- and Water-Exposure Apparatus
ASTM D 5894	(1996) Standard Practice for Cyclic Salt Fog/UV Exposure of Painted Metal, (Alternating Exposures in a Fog/Dry Cabinet and a UV Condensation Cabinet)

UNIFORM BUILDING CODE (UBC)

UBC-97	Uniform Building Code

1.2 GENERAL REQUIREMENTS

1.2.1 Design

Criteria, loading combinations, and definitions shall be in accordance with UBC-97. Maximum calculated fiber stress shall not exceed the allowable value in the AISI or AA manuals; a one third overstress for wind is allowed. Midspan deflection under maximum design loads shall be limited to L/180. Contract drawings (structural - GS series drawings) show the design wind loads and the extent and general assembly details of the metal siding. Members and connections not shown on the drawings shall be designed by the Contractor. Siding panels and accessories shall be the products of the same manufacturer. Steel siding design shall be in accordance with AISI Cold-Formed Mnl. Aluminum siding design shall be in accordance with AA Design Manual.

1.2.2 Architectural Considerations

Panels profile shall be as shown on the drawings.

1.3 SUBMITTALS

Government approval is required for submittals with a "G" designation; submittals not having a "G" designation are for information only. When used, a designation following the "G" designation identifies the office that will review the submittal for the Government. The following shall be submitted in accordance with Section 01330 SUBMITTAL PROCEDURES:

SD-02 Shop Drawings

Soffit and wall panels; G

Drawings consisting of catalog cuts, design and erection drawings, shop coating and finishing specifications, and other data as necessary to clearly describe design, materials, sizes, layouts, construction details, fasteners, and erection.

SD-04 Samples

Color Samples; G

Provide the required 3 x 5 inch metal chips in the range of color indicated on the drawings matching similar buildings on base with the coating system specified. The Contracting Officer shall approve final color.

Accessories; G

One sample of each type of flashing, trim, closure, cap and similar items. Size shall be sufficient to show construction and configuration.

Soffit and wall panels; G

One piece of each type and finish (exterior and interior) to be used, 9 inches long, full width.

Fasteners; G

Two samples of each type to be used with statement regarding intended use. If so requested, random samples of bolts, nuts, and washers as delivered to the jobsite shall be taken in the presence of the Contracting Officer and provided to the Contracting Officer for testing to establish compliance with specified requirements.

Wall Panels; G

One piece, 9 inches long, full width.

SD-07 Certificates

Soffit and wall panels; G
Installation
Accessories

Certificates attesting that the panels and accessories conform to the requirements specified. Certified laboratory test reports showing that the sheets to be furnished are produced under a continuing quality control program and that a representative sample consisting of not less than 5 pieces has been tested and has met the quality standards specified for factory color finish. Mill certification for structural bolts, siding, and wall liner panels.

1.4 DELIVERY AND STORAGE

Materials and mock-ups shall be delivered to the site in a dry and undamaged condition and stored out of contact with the ground. Materials shall be covered with weathertight coverings and kept dry. Storage accommodations for metal siding shall provide good air circulation and protection from surface staining.

1.5 WARRANTIES

The Contractor shall provide a weather tight warranty for the metal siding

for a period of 20 years to include siding panel assembly, 10 years against the wear of color finish, and 10 years against the corrosion of fasteners caused by ordinary wear and tear by the elements. The warranties shall start upon final acceptance of the work or the date the Government takes possession, whichever is earlier.

PART 2 PRODUCTS

2.1 SOFFIT AND WALL PANELS

Wall panels shall be steel, and exterior soffit panels shall be perforated aluminum and solid (non-perforated) interlocking with concealed fasteners as indicated. All soffit and insulated panels shall have a factory color finish. Length of sheets shall be sufficient to cover the entire height of any unbroken wall surface when length of run is 30 feet or less. When length of run exceeds 30 feet, each sheet in the run shall extend over two or more spans. Sheets longer than 30 feet may be furnished if approved by the Contracting Officer.

2.1.1 Wall Panels

Zinc-coated steel conforming to ASTM A 653/A 653M wall panels shall be 0.024 inch thick by 2 inches deep by 12 inches wide steel and have interlocking ribs with concealed fasteners for securing adjacent panels. Wall panels shall be fastened to framework using concealed fasteners. Reference drawings for panels over 30 feet in length for stopping and starting panels at sheet metal reveal.

2.1.2 Aluminum Soffit Panels

Alloy conforming to ASTM B 209, temper as required for the forming operation, perforated soffit panels shall be 0.032 inch thick by 7/16 inch deep by 12 inches wide. Solid (non-perforated) soffit panels shall be 0.032 inch thick by 7/16 inch deep by 12 inches wide. Length of panels shall be uniform and cover the depth of the soffit.

2.2 FACTORY COLOR FINISH

Panels shall have a factory applied polyvinylidene fluoride finish (Kynar) on the exposed side. The exterior finish shall consist of a baked-on topcoat with an appropriate prime coat. Color shall match the color indicated on the drawings. The exterior coating shall be a nominal 1 mil thickness consisting of a topcoat of not less than 0.8 mil dry film thickness and the paint manufacturer's recommended primer of not less than 0.2 mil thickness. The exterior color finish shall meet the test requirements specified below. Provide color samples as referenced per SD-04 and as shown on drawing.

2.2.1 Salt Spray Test

A sample of the sheets shall withstand a cyclic corrosion test for a minimum of 2016 hours in accordance with ASTM D 5894, including the scribe requirement in the test. Immediately upon removal of the panel from the test, the coating shall receive a rating of not less than 10, no blistering, as determined by ASTM D 714; 10, no rusting, as determined by ASTM D 610; and a rating of 6, 1/16 to 1/8 inch failure at scribe, as determined by ASTM D 1654.

2.2.2 Formability Test

When subjected to testing in accordance with ASTM D 522 Method B, 1/8 inch diameter mandrel, the coating film shall show no evidence of fracturing to the naked eye.

2.2.3 Accelerated Weathering, Chalking Resistance and Color Change

A sample of the sheets shall be tested in accordance with ASTM D 4587, test condition D for 2000 total hours. The coating shall withstand the weathering test without cracking, peeling, blistering, loss of adhesion of the protective coating, or corrosion of the base metal. Protective coating that can be readily removed from the base metal with tape in accordance with ASTM D 3359, Test Method B, shall be considered as an area indicating loss of adhesion. Following the accelerated weathering test, the coating shall have a chalk rating not less than No. 8 in accordance with ASTM D 4214 test procedures, and the color change shall not exceed 5 CIE or Hunter Lab color difference (delta E) units in accordance with ASTM D 2244. For sheets required to have a low gloss finish, the chalk rating shall be not less than No. 6 and the color difference shall be not greater than 7 units.

2.2.4 Humidity Test

When subjected to a humidity cabinet test in accordance with ASTM D 2247 for 1000 hours, a scored panel shall show no signs of blistering, cracking, creepage or corrosion.

2.2.5 Impact Resistance

Factory-painted sheet shall withstand direct and reverse impact in accordance with ASTM D 2794 0.500 inch diameter hemispherical head indenter, equal to 1.5 times the metal thickness in mils, expressed in inch-pounds, with no loss of adhesion.

2.2.6 Abrasion Resistance Test

When subjected to the falling sand test in accordance with ASTM D 968, Method A, the coating system shall withstand a minimum of 80 liters of sand before the appearance of the base metal. The term "appearance of base metal" refers to the metallic coating on steel or the aluminum base metal.

2.3 ACCESSORIES

Flashing, trim, metal closure strips, caps, and similar metal accessories shall be the manufacturer's standard products. Exposed metal accessories shall be finished to match the panels furnished. Molded closure strips shall be bituminous-saturated fiber, closed-cell or solid-cell synthetic rubber or neoprene, or polyvinyl chlorided premolded to match configuration of the panels and shall not absorb or retain water.

2.4 FASTENERS

Fasteners for steel panels shall be zinc-coated steel, aluminum, corrosion resisting steel, or nylon capped steel, type and size specified below or as otherwise approved for the applicable requirements. Fasteners for aluminum panels shall be aluminum or corrosion resisting steel. Fasteners for attaching wall panels to supports shall provide both tensile and shear strength of not less than 750 pounds per fastener. Fasteners for accessories shall be the manufacturer's standard. Exposed wall fasteners shall be color finished or provided with plastic color caps to match the

panels. Nonpenetrating fastener system for wall panels using concealed clips shall be manufacturer's standard for the system provided.

2.4.1 Screws

Screws shall be as recommended by the manufacturer.

2.4.2 End-Welded Studs

Automatic end-welded studs shall be shouldered type with a shank diameter of not less than 3/16 inch and cap or nut for holding panels against the shoulder.

2.4.3 Explosive Actuated Fasteners

Fasteners for use with explosive actuated tools shall have a shank of not less than 0.145 inch with a shank length of not less than 1/2 inch for fastening panels to steel and not less than 1 inch for fastening panels to concrete.

2.4.4 Blind Rivets

Blind rivets shall be aluminum with 3/16 inch nominal diameter shank or stainless steel with 1/8 inch nominal diameter shank. Rivets shall be threaded stem type if used for other than the fastening of trim. Rivets with hollow stems shall have closed ends.

2.4.5 Bolts

Bolts shall be not less than 1/4 inch diameter, shouldered or plain shank as required, with proper nuts.

2.5 SEALANT

Sealant shall be an elastomeric type containing no oil or asphalt. Exposed sealant shall be clear and shall cure to a rubberlike consistency.

2.6 GASKETS AND INSULATING COMPOUNDS

Gaskets and insulating compounds shall be nonabsorptive and suitable for insulating contact points of incompatible materials. Insulating compounds shall be nonrunning after drying.

PART 3 EXECUTION

3.1 INSTALLATION

Installation shall be in accordance with the manufacturer's erection instructions and drawings. Dissimilar materials which are not compatible when contacting each other shall be insulated from each other by means of gaskets or insulating compounds. Improper or mislocated drill holes shall be plugged with an oversize screw fastener and gasketed washer; however, panels with an excess of such holes or with such holes in critical locations shall not be used. Exposed surfaces and edges shall be kept clean and free from sealant, metal cuttings, hazardous burrs, and other foreign material. Stained, discolored, or damaged sheets shall be removed from the site.

3.1.1 Soffit, Wall Panels and Accessories

Panels shall be applied as shown on drawings. Accessories shall be fastened into framing members, except as otherwise approved. Closure strips shall be provided as indicated and where necessary to provide weathertight construction.

3.1.1.1 Concealed Panel Fasteners

Panels shall be fastened to framing members with concealed fastening clips or other concealed devices standard with the manufacturer. Spacing of fastening clips and fasteners shall be in accordance with the manufacturer's written instructions. Spacing of fasteners and anchor clips along the panel interlocking ribs shall not exceed 12 incheson center except when otherwise approved. Fasteners shall not puncture metal sheets except as approved for flashing, closures, and trim; exposed fasteners shall be installed in straight lines. Interlocking ribs shall be sealed with factory-applied sealant. Joints at accessories shall be sealed.

-- End of Section --

SECTION 07510

4-PLY BUILT-UP ROOFING
10/01

PART 1 GENERAL

1.1 REFERENCES

The publications listed below form a part of this specification to the extent referenced. The publications are referred to in the text by basic designation only.

AMERICAN SOCIETY FOR TESTING AND MATERIALS (ASTM)

ASTM D 312	(2000) Asphalt Used in Roofing
ASTM D 1668	(1997a) Glass Fabrics (Woven and Treated) for Roofing and Waterproofing
ASTM D 1863	(1993; R 1996) Mineral Aggregate Used on Built-Up Roofs
ASTM D 2178	(1997a) Asphalt Glass Felt Used in Roofing and Waterproofing
ASTM D 3617	(1983; R 1994el) Sampling and Analysis of New Built-Up Roof Membranes
ASTM D 4586	(1993; R 1999) Asphalt Roof Cement, Asbestos Free
ASTM D 4601	(1998) Asphalt-Coated Glass Fiber Base Sheet Used in Roofing

FACTORY MUTUAL ENGINEERING AND RESEARCH (FM)

FM P7825c	(2001) Approval Guide Building Materials

1.2 SUBMITTALS

Government approval is required for submittals with a "G" designation; submittals not having a "G" designation are for information only. When used, a designation following the "G" designation identifies the office that will review the submittal for the Government. The following shall be submitted in accordance with Section 01330 SUBMITTAL PROCEDURES:

SD-03 Product Data

Inspection; G

The inspection procedure for roofing installation, prior to the start of roofing work.

Warranty certificate; G

Submit roofing system manufacturer's warranty stamped "Sample"

or "Facsimile."

Roof Information Card; G

Submit roof information card.

SD-07 Certificates

Bitumen
Felt

Certificates of Compliance for felts and bitumens.

Cants

Certificate attesting that the fiberboard furnished for the project contains recovered material, and showing an estimated percent of such recovered material.

1.3 PREROOFING CONFERENCE

After approval of submittals and before roofing and insulation work, including associated work, is performed, the Contracting Officer will hold a preroofing conference to review the following:

a. Drawings and specifications

b. Procedure for on site inspection and acceptance of roofing substrate and pertinent structural details relating to roofing system

c. Contractor's plan for coordination of work of the various trades involved in providing roofing system and other components secured to roofing

d. Safety requirements.

The preroofing conference shall be attended by the Contractor and personnel directly responsible for the roofing and insulation installation, flashing and sheet metal work, mechanical and electrical work, and representative of the roofing materials manufacturer. Conflicts among those attending the preroofing conference shall be resolved and confirmed in writing before roofing work, including associated work, is begun.

1.4 STORAGE OF MATERIALS

Felts, fabrics, and roll roofing shall be kept dry before, during, and after delivery to the site and shall be stored in an enclosed building or in a closed trailer, and stored on end 1 level high. Felt rolls shall be maintained at a temperature above 50 degrees F for 24 hours immediately before laying. Aggregate shall be kept dry as defined by ASTM D 1863.

1.5 WARRANTY

Furnish the roofing system with a 20-year Manufacturer's Warranty for the roofing system and 5-year Installation Warranty from the date the Government acceptance of the work. The warranty shall be issued directly to the Government and shall not be limited in dollar value. The warranty shall provide that if within the warranty period the built-up roofing

system including membrane, flashing,insulation and accessories becomes nonwatertight, blisters or shows evidence of excessive weathering due to deterioration of the roofing system resulting from defective materials or workmanship, the repair or replacement of defective materials or workmanship shall be the responsibility of the manufacturer. While roofing is under warranty perform repairs that become necessary due to defective materials or workmanship within 72 hours of notification, unless additional time is approved by the Contracting Officer. Failure to perform repairs within specified period of time will constitute grounds for the Government having repairs performed by others and cost billed to Contractor.

PART 2 PRODUCTS

2.1 BITUMEN

2.1.1 Asphalt

ASTM D 312, Type II. Bills of lading shall indicate the flash point and equiviscous temperature (EVT) or this information shall be shown on labels for each container of asphalt.

2.2 BITUMINOUS CEMENT

ASTM D 4586 for use with asphalt roofing systems; preference shall be given to cements whose mineral fillers exclude asbestos fibers.

2.3 CANTS

Cants shall be made from treated wood or treated fiberboard not less than 3-1/2 inches high cut to reduce change in direction of the membrane to 45 degrees or less. Treated wood shall be of water-borne preservative-treated material as specified in Section 06100 ROUGH CARPENTRY. Contractor shall comply with EPA requirements in accordance with Section 01670 RECYCLED / RECOVERED MATERIALS.

2.4 FELT

2.4.1 Base Sheet

Base sheet shall conform to ASTM D 4601, Type II, with no perforations.

2.4.2 Glass Roofing Felt

ASTM D 2178, Type IV or VI.

2.5 NAILS AND FASTENERS

Nails and fasteners shall be an approved type recommended by the roofing felt manufacturer. Fasteners for steel deck shall conform to FM P7825c for Class I roof deck construction, to withstand an uplift pressure of 90 pounds per square foot.

2.6 AGGREGATE SURFACING MATERIALS

Crushed stone, gravel, or crushed slag conforming to ASTM D 1863. Subject to approval, other materials may be used when blended to the grading requirements of ASTM D 1863. Aggregate shall be light-colored and opaque.

2.7 WOVEN GLASS FABRIC

ASTM D 1668, Type I.

2.8 INSULATION

Insulation shall be polyisocyanurate, as specified in Section 07220 ROOF INSULATION. Top layer shall be minimum 3/4 inch thick fiberboard, mineral fiber or perlite.

2.9 FLASHINGS

Bituminous flashings in accordance with these specifications shall be used throughout unless otherwise specified or indicated.

PART 3 EXECUTION

3.1 COORDINATION

The entire roofing system, excluding flood coat and aggregate surfacing, shall be finished in 1 operation up to the line of termination at end of day's work. Glaze coating may be considered part of the flood coat as specified in paragraph GLAZE COAT. Phased construction will not be permitted.

3.1.1 Insulation

Application of roofing shall immediately follow application of insulation as a continuous operation. Roofing operations shall be coordinated with insulation work so that all roof insulation applied each day is waterproofed the same day. Insulation is specified in Section 07220ROOF INSULATION.

3.1.2 Sheet Metalwork

Roofing operations shall be coordinated with sheet metalwork so that sheet metal items are installed to permit continuous roof surfacing operations the same day felts are installed. Sheet metalwork is specified in Section 07600 SHEET METALWORK, GENERAL.

3.2 ENVIRONMENTAL CONDITIONS

Air temperature shall be above 40 degrees F and there shall be no visible ice, frost, or moisture on the roof deck at the time roofing is installed.

3.3 PREPARATION REQUIREMENTS

The substrate construction of a bay or section of the building shall be completed before roofing work is begun thereon. Vents and other items penetrating the roof shall be secured in position and properly prepared for flashing. Nailers, curbs and other items attached to roof surface shall be in place before roofing is begun.

3.4 INSTALLATION OF CANTS

Cants shall be installed in the angles formed between the roof and walls or other vertical surfaces. Cants shall be laid in a solid coat of bituminous cement just prior to laying the roofing plies. Cants shall be continuous, and shall be installed in lengths as long as practicable. Additional cants are not required at locations where cast-in-place cants are integrally

formed with the structural deck or roof fill.

3.5 CONDITION OF SURFACES

Surfaces shall be inspected and approved immediately before application of roofing and flashings. The roofing and flashings shall be applied to a smooth and firm surface free from ice, frost, visible moisture, dirt, projections, and foreign materials. Prior to application of primer on precast concrete decks, joints shall be covered with a 4 inch strip of roofing felt, embedded in and coated with bituminous cement.

3.6 MECHANICAL APPLICATION DEVICES

Mechanical application devices shall be mounted on pneumatic-tired wheels, and shall be designed and maintained to operate without damaging the insulation, roofing membrane, or structural components.

3.7 HEATING OF BITUMEN

Asphalt shall not be heated higher than 25 degrees F above the EVT or 50 degrees below the flash point or 525 degrees F (maximum) whichever is lower. EVT and flash point temperatures of asphalt in the kettle shall be conspicuously posted on the kettle. Heating kettles shall be provided with automatic thermostatic controls and an accurate thermometer. Kettle operators shall be in attendance at all times during the heating to ensure that the maximum temperature specified is not exceeded. Equipment utilizing flame-heat shall not be placed on the roof.

3.8 BITUMEN STOPS

Bitumen stops shall be installed at roof edges, openings and vertical projections before application of roofing plies unless otherwise recommended by the manufacturer's printed instructions. Bitumen stops shall be formed of two 18 inch wide strips of organic felt. Nine inches of the width shall be attached to the roof surface with 9 inches extending beyond the edge. The first strip shall be applied in a 9 inch wide layer of bituminous roofing cement and nailed 1/2 inch from the roof edge at 6 inch spacing. The second strip shall be applied to the first in a 9 inch wide mopping of bitumen. The free portion of each strip shall be protected from damage throughout the roofing period. After the roofing plies are in place, the free portion of each strip shall be folded back over the roofing membrane and embedded in a continuous coating of bituminous cement and secured with roofing nails spaced 3 inches on centers.

3.9 BITUMEN APPLICATION

Asphalt shall be applied within a range of 25 degrees F below to 25 degrees F above the EVT. Temperature of coal-tar bitumen at the time it is applied shall be in accordance with the bitumen manufacturer's recommendations. Application temperatures shall be measured at the mop bucket or mechanical applicator. Bitumen at a temperature below the recommended temperature shall be returned to the kettle. Each layer of felt shall be laid in not less than 20 pounds nor more than 35 pounds of asphalt per square or not less than 30 pounds nor more than 35 pounds of coal-tar bitumen per square. Where solid moppings are required, the following requirements as evidenced in any one roof cut-out sample shall apply:

a. Overlapping voids between two or more plies are not acceptable.

b. The maximum length of any individual void that is encapsulated in bitumen shall be 2 inches.

c. The total length of all voids encapsulated in bitumen shall not exceed 4 inches between any two plies.

d. Dry voids (the absence of bitumen between plies) are not acceptable.

e. Voids continuous through the specimen are not acceptable.

f. Visual interply moisture in voids is not acceptable.

3.10 APPLICATION OF FELTS

Felt plies shall be laid at right angles to the slope of the deck with minimum 6 inch end-laps staggered at least 12 inches. Felts shall be applied in 36 inch widths with 24 2/3 inch side laps and starter sheets 12, 24 and 36 inches wide along eaves to maintain 4 full plies including the base sheet when used. The full 36 inch width of each ply shall be placed in hot bitumen immediately behind the applicator. A broom or follow through tool shall be used to eliminate air pockets and obtain complete adhesion between plies. Bitumen shall be visible beyond all edges of each ply as it is being installed. Plies shall be laid free of wrinkles, creases or fishmouths. Each layer of roofing felt shall be carried up to the top of the cant. Workers shall not walk on mopped surfaces when the bitumen is fluid. For slopes exceeding 1/2 inch per foot, each felt ply, other than venting base sheet, shall be nailed 2 inches and 6 inches from upper edge with nails spaced 12 inches on centers in each row.

3.11 MECHANICAL FASTENING

Nails and fasteners for securing roofing shall be flush driven through flat metal disks of not less than 1 inch diameter. Metal disks may be omitted where heads of fasteners are equivalent in size to the 1 inch diameter disks. Fasteners, when required, shall be spaced within 20 percent of the indicated spacing dimensions. There shall be no less than the total number of indicated fasteners in any 100 square feet area. Fastener pull-out resistance shall be not less than 40 pounds each.

3.12 PROTECTION OF APPLIED ROOFING

At end of day's work or whenever precipitation is imminent, the terminated edge of built-up roofing shall be sealed with 2 full width strips of roofing felt set in and coated with bituminous cement. One half-width of the strips shall be extended up and over the finished roofing and the other half-width extended out and onto the bare roof deck. Sealing strips shall be removed before continuing installation of roofing. To facilitate sealing, termination edges may be straightened with pieces of insulation board which shall be removed when work is resumed.

3.13 FLASHINGS

Flashings shall be provided over cants in the angles formed at walls and other vertical surfaces and where required to make the work watertight. Bituminous flashings described below shall be used, except where metal flashings are specified in other sections of the specifications. Flashings shall be provided and installed immediately after the top ply of felt is placed and before the flood coat and aggregate are placed, adjacent to the

flashing. Modified bituminous flashing may be used when it is specified in the roofing manufacturer's instructions.

3.13.1 Base Flashings

Base Flashings shall be a 3-ply system using woven glass fabric, laid in roofing cement, with mineral surfaced roll roofing as the outer ply. The top of the base flashing shall be at least 8 inches above the roof membrane surface. Mineral surfaced roofing strips shall be cut from the width of the rolls, and shall extend from the reglet or top of curb onto the roof at least 2 inches beyond the widest flashing ply. Laps shall be well cemented, and where possible, shall be shingled in a direction down slope or away from the prevailing wind. The top edge of base flashing systems shall be nailed a maximum of 8 inches on center.

3.13.2 Strip Flashings

Sheet metal flashings, bitumen stops and gravel stops installed over the roofing top ply shall be strip flashed with 2 layers of roofing felt, 9 inches and 12 inches wide and successively cemented in place.

3.13.3 Valleys and Ridges

Felt plies shall continue across valleys and ridges and terminate approximately 12 inches from the valley or ridge. Exposed lap shall terminate on a line approximately 12 inches from, and parallel to the valley or ridge. Two plies of roofing felt 9 inch wide bottom ply, and 12 inch wide top ply, shall be successively mopped-in over each felt line of termination.

3.14 AGGREGATE SURFACING

After roofing felts have been laid and flashings installed, the roof surface, except for cants, shall be flood-coated uniformly with 60 pounds of hot asphalt per square meter. Aggregate surfacing materials shall be spread on the hot bitumen at a rate of 400 pounds per square.

3.15 GLAZE COAT

Glaze coating shall be used to waterproof completed sections when more than one day is required to finish the roofing. If there is a probability of rain falling on the felts before the flood coat and aggregate can be applied, a light glaze coat of bitumen 10 to 15 pounds per square, shall be applied over the exposed felts. The surfacing operation shall be completed within 48 hours after application of the glaze coat. Where glaze coat is used, surface treatment shall be completed as soon as weather conditions permit.

3.16 ROOF CUT-OUT TESTS

Roof cut-out samples shall be taken and analyzed in accordance with ASTM D 3617 as directed by the Contracting Officer when there is reason to believe that deficiencies exist in the roofing membrane. When samples indicate deficiencies in the built-up roofing, corrective action shall be taken as directed.

3.17 INSPECTION

The Contractor shall establish and maintain an inspection procedure to

assure compliance of the installed roofing with the contract requirements. Any work found not to be in compliance with the contract shall be promptly removed and replaced or corrected in an approved manner. Inspection shall include, but not be limited to, the following:

a. Environmental conditions; number and skill level of roofing workers; start and end time of various tasks; condition of substrate.

b. Verification of compliance of materials before, during, and after installation.

c. Inspection of condition of equipment and accuracy of thermometers and metering devices.

d. Inspection of flashings, cants and curbs.

e. Inspection of membrane placement, including edge envelopes, widths of starter sheets, laps, proper use of squeegee, and mechanical fastening.

f. Inspection of application of bitumen, aggregate, and walkways.

g. Inspection of embedment of aggregate for required weight and coverage.

h. Cutout sampling and analysis as directed.

3.18 ROOF INFORMATION CARD

Provide a typewritten card, laminated in plastic for interior display, or a photoengraved 0.032 inch thick aluminum card for exterior display. Card shall be 8 1/2 by 11 inches minimum and contain the information listed on Form 1 located at end of this section. Location and installation of card shall be verified with Contracting Officer.

FORM 1 - ROOFING SYSTEM DESCRIPTION

1. Location _____ 2. Bldg. Name _____

3. Bldg. No. _____ 4. Roof Area (SF) _____ 5. Contract No. _____

6. New Construction: ( ) Yes ( ) No 7. Deck Slope: _____

8. Type of Deck:
( ) Metal

9. Type of Insulation Board:
( ) Polyisocyanurate/Composite ( ) Polyisocyanurate Foam
( ) Polystyrene/Composite ( ) Polystyrene
( ) Perlite ( ) Mineral Fiber
( ) Other _____

10. Insulation Manufacturer: _____

11. Insulation Thickness: _____

12. Vapor Treatment: Total coverage ( ) Yes ( ) No
( ) No Vapor Retarder ( ) Bituminous Vapor Retarder
( ) One Way Roof Vents ( ) Laminated Kraft Paper
( ) Other _____

13. Vapor Treatment Manufacturer(s): _____

14. Roofing Type:
( ) Built-Up (Asphalt)

15. Roofing Manufacturer: _____

16. Roofing Installer/Warrantor: _____

17. Roofing Application Method:
( ) Bitumen ( ) Fully Adhered ( ) Loose-Laid
( ) Mechanically Fastened ( ) Torched Ballasted
( ) Mechanically Fastened/Fully Adhered ( ) Other _____

18. Warranty Period: From _____ To _____

19. Warranty Serial Number: _____

20. Date Roofing Completed: _____ 21. Inspector: _____

22. Prime Contractor Name/Address: _____

Signature: _____ Date: _____

INSTRUCTIONS FOR FORM 1 (Do Not Post)

1. Location: Name of activity as shown on contract.

2. Bldg. Name: As shown on contract or as provided by Contracting Officer.

3. Bldg. Number: As provided by Contracting Officer.

4. Roof Area: Area in square feet of roof for which deck insulation, membrane, etc. are the same. A separate form is required if any part of roof system is different over other areas of the roof.

5. Contract Number: As shown on the contract.

7. Show deck slope.

8. Deck: Check appropriate block.

9. Type of Insulation Board: Check appropriate block.

11. Show minimum thickness of installed insulation.

12. Vapor Treatment: Check appropriate blocks.

13. Show vapor treatment system manufacturer's name.

14. Roofing Type: Check appropriate block.

15. Show roofing manufacturer's name.

16. Roofing Installer's or Contractor's name.

17. Roofing Application Method: Check appropriate block.

18. Warranty Period: Insert start and end dates.

19. Warranty Serial Number: Insert serial number.

20. Show date roofing was accepted by the Contracting Officer. Warranty period begins on this date.

21. Show Government Inspector's name.

22. Prime Contractor Name/Address/Signature: Must be signed and dated by QC Representative or an official of Contracting firm.

-- End of Section --

SECTION 07600

SHEET METALWORK, GENERAL
04/00

PART 1 GENERAL

1.1 REFERENCES

The publications listed below form a part of this specification to the extent referenced. The publications are referred to in the text by basic designation only.

AMERICAN SOCIETY FOR TESTING AND MATERIALS (ASTM)

ASTM A 167	(1999) Stainless and Heat-Resisting Chromium-Nickel Steel Plate, Sheet, and Strip
ASTM B 32	(1996) Solder Metal
ASTM B 209	(1996) Aluminum and Aluminum-Alloy Sheet and Plate
ASTM B 221	(1996) Aluminum and Aluminum-Alloy Extruded Bars, Rods, Wire, Profiles, and Tubes
ASTM B 370	(1998) Copper Sheet and Strip for Building Construction
ASTM D 4586	(1993) Asphalt Roof Cement, Asbestos Free

SHEET METAL & AIR CONDITIONING CONTRACTORS' NATIONAL ASSOCIATION (SMACNA)

SMACNA Arch. Manual	(1993; Errata; Addenda Oct 1997) Architectural Sheet Metal Manual

1.2 GENERAL REQUIREMENTS

Sheet metalwork shall be accomplished to form weathertight construction without waves, warps, buckles, fastening stresses or distortion, and shall allow for expansion and contraction. Cutting, fitting, drilling, and other operations in connection with sheet metal required to accommodate the work of other trades shall be performed by sheet metal mechanics. Application of bituminous strip flashing over various sheet metal items is covered in Section 07510 BUILT-UP ROOFING. Installation of sheet metal items used in conjunction with roofing shall be coordinated with roofing work to permit continuous roofing operations. Sheet metalwork pertaining to heating, ventilating, and air conditioning is specified in Section 15895.

1.3 SUBMITTALS

Government approval is required for submittals with a "G" designation; submittals not having a "G" designation are for information only. When

used, a designation following the "G" designation identifies the office that will review the submittal for the Government. The following shall be submitted in accordance with Section 01330 SUBMITTAL PROCEDURES:

SD-02 Shop Drawings

Materials

Drawings of sheet metal items showing weights, gauges or thicknesses; types of materials; expansion-joint spacing; fabrication details; and installation procedures.

1.4 DELIVERY, STORAGE, AND HANDLING

Materials shall be adequately packaged and protected during shipment and shall be inspected for damage, dampness, and wet-storage stains upon delivery to the jobsite. Materials shall be clearly labeled as to type and manufacturer. Sheet metal items shall be carefully handled to avoid damage. Materials shall be stored in dry, ventilated areas until immediately before installation.

PART 2 PRODUCTS

2.1 MATERIALS

Lead, lead-coated metal, and galvanized steel shall not be used. Any metal listed by SMACNA Arch. Manual for a particular item may be used, unless otherwise specified or indicated. Materials shall conform to the requirements specified below and to the thicknesses and configurations established in SMACNA Arch. Manual. Different items need not be of the same metal, except that if copper is selected for any exposed item, all exposed items shall be copper.

2.1.1 Accessories

Accessories and other items essential to complete the sheet metal installation, though not specifically indicated or specified, shall be provided.

2.1.2 Aluminum Extrusions

ASTM B 221, Alloy 6063, Temper T5.

2.1.3 Bituminous Cement

Asphalt cement conforming to ASTM D 4586. For asphalt roofing systems.

2.1.4 Sealant

Unless otherwise specified, sealant shall be an elastomeric weather resistant sealant as specified in Section 07900 JOINT SEALING.

2.1.5 Fasteners

Fasteners shall be compatible with the fastened material and shall be the type best suited for the application.

2.1.6 Aluminum Alloy Sheet and Plate

ASTM B 209, anodized color to match adjacent surface and to be verified and approved by Contract Officer, form, alloy, and temper appropriate for use.

2.1.7 Copper

ASTM B 370, Temper H 00.

2.1.8 Stainless Steel

ASTM A 167, Type 302 or 304; fully annealed, dead soft temper.

2.1.9 Solder

ASTM B 32, 95-5 tin-antimony.

2.1.10 Through-Wall Flashing

a. Electro-sheet copper not less than 5 ounces, factory coated both sides with acid- and alkali-resistant bituminous compound not less than 6 ounces per square foot or factory covered both sides with asphalt-saturated cotton fabric, asphalt saturated glass-fiber fabric, or with 40 pound reinforced kraft paper bonded with asphalt.

b. Stainless steel, Type 304, not less than 0.003 inch thick, completely encased by and permanently bonded on both sides to 50 pound high strength bituminized crepe kraft paper, using hot asphalt, heat, and pressure.

2.1.11 Parapet Coping, Fascia, Scupper, Conductor, Gutters and Downspouts

Fabricate from the same material and finish as metal roof panels as specified in Section 07412, NON-STRUCTURING METAL ROOFING. Material thickness for gutters and downspouts shall be 22 gauge unless otherwise noted. Gutter shall match roof color of building. Provide drips at all perpendicular transitions. All plywood backing edges shall be covered with metal.

PART 3 EXECUTION

3.1 GENERAL REQUIREMENTS

Gutters and downspouts shall be designed and fabricated in conformance with SMACNA Arch. Manual; louvers shall be fabricated in conformance with SMACNA Arch. Manual and as indicated. Unless otherwise specified or indicated, exposed edges shall be folded back to form a 1/2 inch hem on the concealed side, and bottom edges of exposed vertical surfaces shall be angled to form drips. Bituminous cement shall not be placed in contact with roofing membranes other than built-up roofing.

3.2 PROTECTION OF ALUMINUM AND GALVALUME

Aluminum shall not be used where it will be in contact with copper or where it will contact water which flows over copper surfaces. Aluminum that will be in contact with wet or pressure-treated wood, mortar, concrete, masonry, or ferrous metals shall be protected against galvanic or corrosive action by one of the following methods:

3.2.1 Paint

Aluminum surfaces shall be solvent cleaned and given one coat of zinc-molybdate primer and one coat of aluminum paint as specified in Section 09900 PAINTING, GENERAL.

3.2.2 Nonabsorptive Tape or Gasket

Nonabsorptive tape or gasket shall be placed between the adjoining surfaces and cemented to the aluminum surface using a cement compatible with aluminum.

3.3 CONNECTIONS AND JOINTING

3.3.1 Soldering

Soldering shall apply to copper, and stainless steel items. Edges of sheet metal shall be pretinned before soldering is begun. Soldering shall be done slowly with well heated soldering irons so as to thoroughly heat the seams and completely sweat the solder through the full width of the seam. Edges of stainless steel to be pretinned shall be treated with soldering acid flux. Soldering shall follow immediately after application of the flux. Upon completion of soldering, the acid flux residue shall be thoroughly cleaned from the sheet metal with a water solution of washing soda and rinsed with clean water.

3.3.2 Riveting

Joints in aluminum sheets 0.040 inch or less in thickness shall be mechanically made.

3.3.3 Seaming

Flat-lock and soldered-lap seams shall finish not less than 1 inch wide. Unsoldered plain-lap seams shall lap not less than 3 inches unless otherwise specified. Flat seams shall be made in the direction of the flow.

3.4 CLEATS

A continuous cleat shall be provided where indicated or specified to secure loose edges of the sheet metalwork. Butt joints of cleats shall be spaced approximately 1/8 inch apart. The cleat shall be fastened to supporting wood construction with nails evenly spaced not over 12 inches on centers. Where the fastening is to be made to concrete or masonry, screws shall be used and shall be driven in expansion shields set in concrete or masonry.

3.5 GUTTERS AND DOWNSPOUTS

Gutters and downspouts shall be rigidly attached to the building. Supports for downspouts gutters which include straps, expansion joints, adhesives and anchors shall be installed as recommended by the SMACNA's manual.

3.6 FLASHINGS

Flashings shall be installed at locations indicated and as specified below. Sealing shall be according to the flashing manufacturer's recommendations. Flashings shall be installed at intersections of roof with vertical surfaces and at projections through roof, except that flashing for heating and plumbing, including piping, roof, and floor drains, and for electrical conduit projections through roof or walls are specified in other sections.

Except as otherwise indicated, counter flashings shall be provided over base flashings. Perforations in flashings made by masonry anchors shall be covered up by an application of bituminous plastic cement at the perforation. Flashing shall be installed on top of joint reinforcement. Flashing shall be formed to direct water to the outside of the system.

3.6.1 Base Flashing

Metal base flashing shall be coordinated with roofing work. Metal base flashing shall be set in plastic bituminous cement over the roofing membrane, nailed to nailing strip, and secured in place on the roof side with nails spaced not more than 3 inches on centers. Metal base flashing shall not be used on built-up roofing.

3.6.2 Counter Flashings

Except as otherwise indicated, counter flashings shall be provided over base flashings. Counter flashing shall be installed as shown on the drawings and/or recommended per SMACNA Arch. Manual. Where bituminous base flashings are provided, the counter flashing shall extend down as close as practicable to the top of the cant strip. Counter flashing shall be factory formed to provide spring action against the base flashing.

3.6.3 Stepped Flashing

Stepped flashing shall be installed where sloping roofs surfaced with shingles abut vertical surfaces. Separate pieces of base flashing shall be placed in alternate shingle courses.

3.6.4 Through-Wall Flashing

Through-wall flashing includes sill, lintel, and spandrel flashing. The flashing shall be laid with a layer of mortar above and below the flashing so that the total thickness of the two layers of the mortar and flashing are the same thickness as the regular mortar joints. Flashing shall not extend further into the masonry backup wall than the first mortar joint. Joints in flashing shall be lapped and sealed. Flashing shall be one piece for lintels and sills.

3.6.4.1 Lintel Flashing

Lintel flashing shall extend the full length of lintel. Flashing shall extend through the wall one masonry course above the lintels and shall be bent down over the vertical leg of the outer steel lintel angle not less than 2 inches, or shall be applied over top of masonry and precast concrete lintels. Bedjoints of lintels at control joints shall be underlaid with sheet metal bond breaker.

3.6.4.2 Sill Flashing

Sill flashing shall extend the full width of the sill and not less than 4 inches beyond ends of sill except at control joint where the flashing shall be terminated at the end of the sill.

3.6.5 Valley Flashing

Valley flashing shall be installed as specified in SMACNA Arch. Manual and as indicated.

3.7 GRAVEL STOPS AND FASCIA

Gravel stops and fascia shall be fabricated and installed as indicated and in accordance with SMACNA Arch. Manual Install fascia where substrate materials will not telegraph seams, joints, clips and fasteners.

3.8 INSTALLATION OF LOUVERS

Louvers shall be rigidly attached to the supporting construction. The installation shall be rain-tight. Louver screen shall be installed as indicated.

3.9 CONTRACTOR QUALITY CONTROL

The Contractor shall establish and maintain a quality control procedure for sheet metal used in conjunction with roofing to assure compliance of the installed sheet metalwork with the contract requirements. Any work found not to be in compliance with the contract shall be promptly removed and replaced or corrected in an approved manner. Quality control shall include, but not be limited to, the following:

a. Observation of environmental conditions; number and skill level of sheet metal workers; condition of substrate.

b. Verification of compliance of materials before, during, and after installation.

c. Inspection of sheet metalwork for proper size and thickness, fastening and joining, and proper installation.

The actual quality control observations and inspections shall be documented and a copy of the documentation furnished to the Contracting Officer at the end of each day.

-- End of Section --

SECTION 07840

FIRESTOPPING
08/00

PART 1 GENERAL

1.1 REFERENCES

The publications listed below form a part of this specification to the extent referenced. The publications are referred to in the text by basic designation only.

AMERICAN SOCIETY FOR TESTING AND MATERIALS (ASTM)

ASTM C 612	Specifications for Mineral Fiber Block and Board Thermal Insulation
ASTM E 84	(1999) Surface Burning Characteristics of Building Materials
ASTM E 119	(1998) Fire Tests of Building Construction and Materials
ASTM E 136	Test Method for Behavior of Materials in a Vertical Tube Furnace at 750 Deg. C.
ASTM E 814	(1997) Fire Tests of Through-Penetration Fire Stops
ASTM E 1399	(1997) Cyclic Movement and Measuring the Minimum and Maximum Joint Widths of Architectural Joint Systems

UNDERWRITERS LABORATORIES (UL)

UL 723	(1996; Rev thru Dec 1998) Test for Surface Burning Characteristics of Building Materials
UL 1479	(1994; Rev thru Feb 1998) Fire Tests of Through-Penetration Firestops
UL 2079	(1998) Tests for Fire Resistance of Building Joint Systems
UL Fire Resist Dir	(1999) Fire Resistance Directory (2 Vol.)

1.2 SUBMITTALS

Government approval is required for submittals with a "G" designation; submittals not having a "G" designation are for information only. When used, a designation following the "G" designation identifies the office that will review the submittal for the Government. The following shall be submitted in accordance with Section 01330 SUBMITTAL PROCEDURES:

SD-02 Shop Drawings

Firestopping Materials

Detail drawings including manufacturer's descriptive data, typical details conforming to UL Fire Resist Dir or other details certified by another nationally recognized testing laboratory, installation instructions or UL listing details for a firestopping assembly in lieu of fire-test data or report. For those firestop applications for which no UL tested system is available through a manufacturer, a manufacturer's engineering judgement, derived from similar UL system designs or other tests, shall be submitted for review and approval prior to installation. Submittal shall indicate the firestopping material to be provided for each type of application. When more than 5 penetrations or construction joints are to receive firestopping, drawings shall indicate location and type of application.

SD-07 Certificates

Firestopping Materials

Certificates attesting that firestopping material complies with the specified requirements. In lieu of certificates, drawings showing UL classified materials as part of a tested assembly may be provided. Drawings showing evidence of testing by an alternate nationally recognized independent laboratory may be substituted.

Installer Qualifications

Documentation of training and experience.

Inspection; G

Manufacturer's representative certification stating that firestopping work has been inspected and found to be applied according to the manufacturer's recommendations and the specified requirements.

1.3 GENERAL REQUIREMENTS

Firestopping shall consist of furnishing and installing tested and listed firestop systems, combination of materials, or devices to form an effective barrier against the spread of flame, smoke and gases, and maintain the integrity of fire resistance rated walls, partitions, floor, and ceiling-roof assemblies, including through-penetrations and construction joints and gaps. Through-penetrations include the annular space around pipes, tubes, conduit, wires, cables and vents. Construction joints include those used to accommodate expansion, contraction, wind, or seismic movement; firestopping material shall not interfere with the required movement of the joint. Gaps requiring firestopping include gaps between the curtain wall and the floor slab and between the top of the fire-rated walls and the roof or floor deck above.

1.4 STORAGE AND DELIVERY

Materials shall be delivered in the original unopened packages or containers showing name of the manufacturer and the brand name. Materials

shall be stored off the ground and shall be protected from damage and exposure to elements. Damaged or deteriorated materials shall be removed from the site.

1.5 INSTALLER QUALIFICATIONS

The Contractor shall engage an experienced Installer who is certified, licensed, or otherwise qualified by the firestopping manufacturer as having the necessary staff, training, and a minimum of 3 years experience in the installation of manufacturer's products per specified requirements. A manufacturer's willingness to sell its firestopping products to the Contractor or to an installer engaged by the Contractor does not in itself confer qualification on the buyer. The Installer shall have been trained by a direct representative of the manufacturer (not distributor or agent) in the proper selection and installation procedures.

PART 2 PRODUCTS

2.1 FIRESTOPPING MATERIALS

Firestopping materials shall consist of commercially manufactured, asbestos-free products complying with the following minimum requirements:

2.1.1 Fire Hazard Classification

Material shall have a flame spread of 25 or less, and a smoke developed rating of 50 or less, when tested in accordance with ASTM E 84 or UL 723. Material shall be an approved firestopping material as listed in UL Fire Resist Dir or by a nationally recognized testing laboratory.

2.1.2 Toxicity

Material shall be nontoxic to humans at all stages of application.

2.1.3 Fire Resistance Rating

Firestopping will not be required to have a greater fire resistance rating than that of the assembly in which it is being placed.

2.1.3.1 Through-Penetrations

Firestopping materials for through-penetrations, as described in paragraph GENERAL REQUIREMENTS, shall provide "F" and "T" fire resistance ratings in accordance with ASTM E 814 or UL 1479. Fire resistance ratings shall be as follows:

a. Penetrations of Fire Resistance Rated Walls and Partitions: F Rating = 1, 2 and 3 hours for walls and partitions as indicated on drawing and Life Safety Plans.

b. Penetrations of Fire Resistance Rated Floor, Roof-Ceiling Assemblies and Ceiling-Floor Assemblies: F Rating = 1 hour, T Rating = 1 hour.

2.1.3.2 Construction Joints and Gaps

Fire resistance ratings of construction joints, as described in paragraph GENERAL REQUIREMENTS, and gaps such as those between floor slabs or roof decks and curtain walls shall be the same as the construction in which they

occur. Construction joints and gaps shall be provided with firestopping materials and systems that have been tested per ASTM E 119 or UL 2079 to meet the required fire resistance rating. Systems installed at construction joints shall meet the cycling requirements of ASTM E 1399 or UL 2079.

2.2 SAFING INSULATION AND ACCESSORIES

2.2.1 Slag-Wool-Fiber Board Safing Insulation

Semirigid boards designed for use as fire stop at openings between edge of slab and exterior wall panels, produced by combining slag-wool fibers with thermosetting resin binders to comply with ASTM C 612, Type IA and IB; nominal density of 4 lb/cu. ft.; passing ASTM E 136 for combustion characteristics; thermal resistivity of 4 degrees F x h x sq. ft./Btu x in. at 75 degrees F (27.7 K x m/W at 24 degrees C).

2.2.2 Calking Compound

Material approved by manufacturer of safing insulation for sealing joint between foil backing of safing insulation and edge of concrete floor slab against penetration of smoke.

PART 3 EXECUTION

3.1 PREPARATION

Areas to receive firestopping shall be free of dirt, grease, oil, or loose materials which may affect the fitting or fire resistance of the firestopping system. For cast-in-place firestop devices, formwork or metal deck to receive device prior to concrete placement shall be sound and capable of supporting device.

3.2 INSTALLATION

Firestopping material shall completely fill void spaces regardless of geometric configuration, subject to tolerance established by the manufacturer. Firestopping shall be installed in accordance with manufacturer's written instructions. Tested and listed firestop systems shall be provided in the following locations, except in floor slabs on grade:

a. Penetrations of duct, conduit, tubing, cable and pipe through fire-resistance rated walls, partitions, and ceiling-roof assemblies.

b. Penetrations of vertical shafts such as pipe chases.

c. Gaps at the intersection of floor slabs and curtain walls, including inside of hollow curtain walls at the floor slab.

d. Gaps at perimeter of fire-resistance rated walls and partitions, such as between the top of the walls and the bottom of roof decks.

e. Construction joints in floors and fire rated walls and partitions.

f. Other locations where required to maintain fire resistance rating of the construction.

3.2.1 Insulated Pipes and Ducts

Thermal insulation shall be cut and removed where pipes or ducts pass through firestopping, unless insulation meets requirements specified for firestopping. Thermal insulation shall be replaced with a material having equal thermal insulating and firestopping characteristics.

3.2.2 Fire Dampers

Fire dampers shall be installed and firestopped in accordance with Section 15895 AIR SUPPLY, DISTRIBUTION, VENTILATION, AND EXHAUST SYSTEM.

3.3 INSPECTION

Firestopped areas shall not be covered or enclosed until inspection is complete and approved. A manufacturer's representative shall inspect the applications initially to ensure adequate preparations (clean surfaces suitable for application, etc.) and periodically during the work to assure that the completed work has been accomplished according to the manufacturer's written instructions and the specified requirements.

-- End of Section --

SECTION 07900

JOINT SEALING
06/97

PART 1 GENERAL

1.1 REFERENCES

The publications listed below form a part of this specification to the extent referenced. The publications are referred to in the text by basic designation only.

AMERICAN SOCIETY FOR TESTING AND MATERIALS (ASTM)

ASTM C 509	(1994) Elastomeric Cellular Preformed Gasket and Sealing Material
ASTM C 734	(1993) Low-Temperature Flexibility of Latex Sealants After Artificial Weathering
ASTM C 920	(1998) Elastomeric Joint Sealants
ASTM D 217	(1997) Cone Penetration of Lubricating Grease (IP50/88)
ASTM D 1056	(1998) Flexible Cellular Materials - Sponge or Expanded Rubber
ASTM E 84	(1999) Surface Burning Characteristics of Building Materials

1.2 SUBMITTALS

Government approval is required for submittals with a "G" designation; submittals not having a "G" designation are for information only. When used, a designation following the "G" designation identifies the office that will review the submittal for the Government. The following shall be submitted in accordance with Section 01330 SUBMITTAL PROCEDURES:

SD-03 Product Data

Backing

Bond-Breaker

Sealant

Manufacturer's descriptive data including storage requirements, shelf life, curing time, instructions for mixing and application, and primer data (if required). A copy of the Material Safety Data Sheet shall be provided for each solvent, primer or sealant material.

SD-04 Samples

Sealants shall match adjacent surface where applied such as aluminum doors and frames, brick masonry, precast concrete, painted hollow metal door frames and etc. Provide color chips.

Langley AFB standard color for brick masonry control joints shall match Pecora Corporation "Redwood Tan."

SD-07 Certificates

Sealant

Certificates of compliance stating that the materials conform to the specified requirements.

1.3 ENVIRONMENTAL REQUIREMENTS

The ambient temperature shall be within the limits of 40 to 90 degrees F when the sealants are applied.

1.4 DELIVERY AND STORAGE

Materials shall be delivered to the job in the manufacturer's original unopened containers. The container label or accompanying data sheet shall include the following information as applicable: manufacturer, name of material, formula or specification number, lot number, color, date of manufacture, mixing instructions, shelf life, and curing time at the standard conditions for laboratory tests. Materials shall be handled and stored to prevent inclusion of foreign materials. Materials shall be stored at temperatures between 40 and 90 degrees F unless otherwise specified by the manufacturer.

PART 2 PRODUCTS

2.1 BACKING

Backing shall be 25 to 33 percent oversize for closed cell and 40 to 50 percent oversize for open cell material, unless otherwise indicated.

2.1.1 Rubber

Cellular rubber sponge backing shall be ASTM D 1056, Type 2, closed cell, Class A, round cross section.

2.1.2 Synthetic Rubber

Synthetic rubber backing shall be ASTM C 509, Option I, Type I preformed rods or tubes.

2.2 BOND-BREAKER

Bond-breaker shall be as recommended by the sealant manufacturer to prevent adhesion of the sealant to backing or to bottom of the joint.

2.3 PRIMER

Primer shall be non-staining type as recommended by sealant manufacturer for the application.

2.4 SEALANT

2.4.1 ELASTOMERIC

Elastomeric sealants shall conform to ASTM C 920 and the following:

a. Exterior Uses:

(1) Silicone Exterior Sealant: Type S, Grade NS, Class 25; use M for the following areas:

(a) Masonry, precast and stone coping joints.

(b) Metal and glass substrates.

(c) Roof flashing and thresholds.

(2) One-Component Urethane Sealant: Type S, Grade NS, Class 25; use NT for the following area:

(a) Joints arount perimeter door, windows and frames

(b) Penetrations of walls and roof by piping, conduit and other services or equipment except fire-rated penetrations.

(c) Roof flashing and thresholds.

b. Interior Uses:

(1) Silicone Interior Sealant: Type S, Grade NS, Class 25; Use T for the following areas:

(a) Wall joints in ceramic tile.

(b) Sinks and plumbing fixtures.

(2) One-component Urethane Sealant: Type S, Grade P, Self-leveling, Class 25; Use T for the following areas:

(a) Interior floor construction joints.

(b) Control joints in concrete porcelain porous and ceramic tile floors.

(3) One Component Urethane Sealant: Type S, Grade NS, Class 25; Use NT for the following areas:

(a) Interior doors and frames.

2.4.2 ACOUSTICAL

Rubber or polymer-based acoustical sealant shall have a flame spread of 25 or less and a smoke developed rating of 50 or less when tested in accordance with ASTM E 84. Acoustical sealant shall have a consistency of 250 to 310 when tested in accordance with ASTM D 217, and shall remain flexible and adhesive after 500 hours of accelerated weathering as specified in ASTM C 734, and shall be non-staining.

2.4.3 PREFORMED

2.4.3.1 Foam Strip

Foam strip shall be polyurethane foam; cross-section dimensions shall be recommended by Manufacturer. Foam strip shall be capable of sealing out moisture, air, and dust when installed and compressed as recommended by the manufacturer. Service temperature shall beminus 40 to plus 275 degrees F. Untreated strips shall be furnished with adhesive to hold them in place. Adhesive shall not stain or bleed into adjacent finishes. Treated strips shall be saturated with butylene waterproofing or impregnated with asphalt.

2.5 SOLVENTS AND CLEANING AGENTS

Solvents, cleaning agents, and accessory materials shall be provided as recommended by the manufacturer.

PART 3 EXECUTION

3.1 GENERAL

3.1.1 Surface Preparation

The surfaces of joints to receive sealant or caulk shall be free of all frost, condensation and moisture. Oil, grease, dirt, chalk, particles of mortar, dust, loose rust, loose mill scale, and other foreign substances shall be removed from surfaces of joints to be in contact with the sealant. Oil and grease shall be removed with solvent and surfaces shall be wiped dry with clean cloths. For surface types not listed below, the sealant manufacturer shall be contacted for specific recommendations.

3.1.2 Concrete and Masonry Surfaces

Where surfaces have been treated with curing compounds, oil, or other such materials, the materials shall be removed by sandblasting or wire brushing. Laitance, efflorescence and loose mortar shall be removed from the joint cavity.

3.1.3 Steel Surfaces

Steel surfaces to be in contact with sealant shall be sandblasted or, if sandblasting would not be practical or would damage adjacent finish work, the metal shall be scraped and wire brushed to remove loose mill scale. Protective coatings on steel surfaces shall be removed by sandblasting or by a solvent that leaves no residue.

3.1.4 Aluminum Surfaces

Aluminum surfaces to be in contact with sealants shall be cleaned of temporary protective coatings. When masking tape is used for a protective cover, the tape and any residual adhesive shall be removed just prior to applying the sealant. Solvents used to remove protective coating shall be as recommended by the manufacturer of the aluminum work and shall be non-staining.

3.1.5 Wood Surfaces

Wood surfaces to be in contact with sealants shall be free of splinters and sawdust or other loose particles.

3.2 APPLICATION

3.2.1 Masking Tape

Masking tape may be placed on the finish surface on one or both sides of a joint cavity to protect adjacent finish surfaces from primer or sealant smears. Masking tape shall be removed within 10 minutes after joint has been filled and tooled.

3.2.2 Backing

Backing shall be installed to provide the indicated sealant depth. The installation tool shall be shaped to avoid puncturing the backing.

3.2.3 Bond-Breaker

Bond-breaker shall be applied to fully cover the bottom of the joint without contaminating the sides where sealant adhesion is required.

3.2.4 Primer

Primer shall be used on concrete masonry units, wood, or other porous surfaces in accordance with instructions furnished with the sealant. Primer shall be applied to the joint surfaces to be sealed. Surfaces adjacent to joints shall not be primed.

3.2.5 Sealant

Sealant shall be used before expiration of shelf life. Multi-component sealants shall be mixed according to manufacturer's printed instructions. Sealant in guns shall be applied with a nozzle of proper size to fit the width of joint. Joints shall be sealed as detailed in the drawings. Sealant shall be forced into joints with sufficient pressure to expel air and fill the groove solidly. Sealant shall be installed to the indicated depth without displacing the backing. Unless otherwise indicated, specified, or recommended by the manufacturer, the installed sealant shall be dry tooled to produce a uniformly smooth surface free of wrinkles and to ensure full adhesion to the sides of the joint; the use of solvents, soapy water, etc., will not be allowed. Sealants shall be installed free of air pockets, foreign embedded matter, ridges and sags. Sealer shall be applied over the sealant when and as specified by the sealant manufacturer.

3.3 CLEANING

The surfaces adjoining the sealed joints shall be cleaned of smears and other soiling resulting from the sealant application as work progresses.

-- End of Section --

SECTION 08110

STEEL DOORS AND FRAMES
05/01

PART 1 GENERAL

1.1 REFERENCES

The publications listed below form a part of this specification to the extent referenced. The publications are referred to in the text by the basic designation only.

AMERICAN NATIONAL STANDARDS INSTITUTE (ANSI)

ANSI A250.6	(1997) Hardware on Standard Steel Doors (Reinforcement - Application)
ANSI A250.8	(1998) SDI-100 Recommended Specifications for Standard Steel Doors and Frames

AMERICAN SOCIETY FOR TESTING AND MATERIALS (ASTM)

ASTM A 591	(1998) Steel Sheet, Electrolytic Zinc-Coated, for Light Coating Mass Applications
ASTM C 591	(1994) Unfaced Preformed Rigid Cellular Polyisocyanurate Thermal Insulation
ASTM D 2863	(1997) Measuring the Minimum Oxygen Concentration to Support Candle-Like Combustion of Plastics (Oxygen Index)
ASTM E 283	(1991) Rate of Air Leakage Through Exterior Windows, Curtain Walls, and Doors Under Specified Pressure Differences Across the Specimen

DOOR AND HARDWARE INSTITUTE (DHI)

ANSI/DHI A115	(1991) Steel Door Preparation Standards (Consisting of A115.1 through A115.6 and A115.12 through A115.18)

HOLLOW METAL MANUFACTURERS ASSOCIATION (HMMA)

HMMA HMM	(1992) Hollow Metal Manual

NATIONAL FIRE PROTECTION ASSOCIATION (NFPA)

NFPA 80	(1999) Fire Doors and Fire Windows
NFPA 105	(1999) The Installation of Smoke-Control Door Assemblies

NFPA 252	(1999) Standard Methods of Fire Tests of Door Assemblies

STEEL DOOR INSTITUTE (SDOI)

SDI 105	(1998) Recommended Erection Instructions for Steel Frames
SDI 111-F	Recommended Existing Wall Anchors for Standard Steel Doors and Frames

UNDERWRITERS LABORATORIES (UL)

UL 10B	(1997) Fire Tests of Door Assemblies

1.2 SUBMITTALS

Submit the following in accordance with Section 01330, "Submittal Procedures."

SD-02 Shop Drawings

Doors; G

Frames; G

Accessories

Show elevations, construction details, metal gages, hardware provisions, method of glazing, and installation details.

Schedule of doors; G

Schedule of frames; G

Submit door and frame locations.

SD-03 Product Data

Doors; G

Frames; G

Accessories

Submit manufacturer's descriptive literature for doors, frames, and accessories. Include data and details on door construction, panel (internal) reinforcement, insulation, and door edge construction. When "custom hollow metal doors" are provided in lieu of "standard steel doors," provide additional details and data sufficient for comparison to ANSI A250.8 requirements.

1.3 DELIVERY, STORAGE, AND HANDLING

Deliver doors, frames, and accessories undamaged and with protective wrappings or packaging. Provide temporary steel spreaders securely fastened to the bottom of each welded frame. Store doors and frames on platforms under cover in clean, dry, ventilated, and accessible locations, with 1/4 inch airspace between doors. Remove damp or wet packaging immediately and

wipe affected surfaces dry. Replace damaged materials with new.

PART 2 PRODUCTS

2.1 STANDARD STEEL DOORS

ANSI A250.8, except as specified otherwise. Prepare doors to receive hardware specified in Section 08710, "Door Hardware." Undercut where indicated. Exterior doors shall have top edge closed flush and sealed to prevent water intrusion. Doors shall be 1 3/4 inches thick, unless otherwise indicated.

2.1.1 Classification - Level, Performance, Model

2.1.1.1 Heavy Duty Doors

ANSI A250.8, Level 2, physical performance Level B, Model 1, with core construction as required by the manufacturer for interior doors of size(s) and design indicated unless noted otherwise on the Door Schedule.

2.1.1.2 Maximum Duty Doors

ANSI A250.8, Level 4, physical performance Level A, Model 1 with core construction as required by the manufacturer for all exterior doors, and interior doors indicated on Door Schedule, of size(s) and design indicated.

2.2 CUSTOM HOLLOW METAL DOORS

Provide custom hollow metal doors where nonstandard steel doors are indicated. At the Contractor's option, custom hollow metal doors may be provided in lieu of standard steel doors. Door size(s), design, materials, construction, gages, and finish shall be as specified for standard steel doors and shall comply with the requirement of HMMA HMM. Fill all spaces in doors with insulation. Close top and bottom edges with steel channels not lighter than 16 gage. Close tops of exterior doors flush with an additional channel and seal to prevent water intrusion. Prepare doors to receive hardware specified in Section 08710, "Door Hardware." Doors shall be 1 3/4 inches thick, unless otherwise indicated.

2.3 ACCESSORIES

2.3.1 Astragals

For pairs of exterior steel doors which will not have aluminum astragals or removable mullions, as specified in Section 08710, "Door Hardware," provide overlapping steel astragals with the doors. For interior pairs of fire rated and smoke control doors, provide stainless steel astragals complying with NFPA 80 for fire rated assemblies and NFPA 105 for smoke control assemblies.

2.3.2 Moldings

Provide moldings around glass of interior and exterior doors and louvers of interior doors. Provide nonremovable moldings on outside of exterior doors and on corridor side of interior doors. Other moldings may be stationary or removable. Secure inside moldings to stationary moldings, or provide snap-on moldings. Muntins shall interlock at intersections and shall be fitted and welded to stationary moldings.

2.4 INSULATION CORES

Insulated cores shall be of type specified, and provide an apparent R factor of 10 or more and shall conform to:

a. Rigid Polyurethane Foam: ASTM C 591, Type 1 or 2, foamed-in-place or in board form, with oxygen index of not less than 22 percent when tested in accordance with ASTM D 2863; or

2.5 STANDARD STEEL FRAMES

ANSI A250.8, except as otherwise specified. Form frames to sizes and shapes indicated, with welded corners. Provide steel frames for doors, and mullions, cased openings, unless otherwise indicated.

2.5.1 Welded Frames

Continuously weld frame faces at corner joints. Mechanically interlock or continuously weld stops and rabbets. Grind welds smooth.

2.5.2 Stops and Beads

Form stops and beads from 20 gage steel. Provide for glazed and other openings in standard steel frames. Secure beads to frames with oval-head, countersunk Phillips self-tapping sheet metal screws or concealed clips and fasteners. Space fasteners approximately 12 to 16 inches on centers. Miter molded shapes at corners. Butt or miter square or rectangular beads at corners.

2.5.3 Cased Openings

Fabricate frames for cased openings of same material, gage, and assembly as specified for metal door frames, except omit door stops and preparation for hardware.

2.5.4 Anchors

Provide anchors to secure the frame to adjoining construction. Provide steel anchors, zinc-coated or painted with rust-inhibitive paint, not lighter than 18 gage.

2.5.4.1 Wall Anchors

Provide at least three anchors for each jamb. For frames which are more than 7.5 feet in height, provide one additional anchor for each jamb for each additional 2.5 feet or fraction thereof.

a. Masonry: Provide anchors of corrugated or perforated steel straps or 3/16 inch diameter steel wire, adjustable or T-shaped;

b. Stud partitions: Weld or otherwise securely fasten anchors to backs of frames. Design anchors to be fastened to closed steel studs with sheet metal screws, and to open steel studs by wiring or welding;

c. Completed openings: Secure frames to previously placed concrete or masonry with expansion bolts in accordance with SDI 111-F; and

2.5.4.2 Floor Anchors

Provide floor anchors drilled for 3/8 inch anchor bolts at bottom of each jamb member. Where floor fill occurs, terminate bottom of frames at the indicated finished floor levels and support by adjustable extension clips resting on and anchored to the structural slabs.

2.6 FIRE AND SMOKE DOORS AND FRAMES

NFPA 80 and NFPA 105 and this specification. The requirements of NFPA 80 and NFPA 105 shall take precedence over details indicated or specified.

2.6.1 Labels

Fire doors and frames shall bear the label of Underwriters Laboratories, Inc. (UL), Factory Mutual Engineering and Research (FM), or Warnock Hersey International (WHI) attesting to the rating required. Testing shall be in accordance with NFPA 252 or UL 10B. Labels shall be metal with raised letters, and shall bear the name or file number of the door and frame manufacturer. Labels shall be permanently affixed at the factory to frames and to the hinge edge of the door. Door labels shall not be painted.

2.6.2 Oversized Doors

For fire doors and frames which exceed the size for which testing and labeling are available, furnish certificates stating that the doors and frames are identical in design, materials, and construction to a door which has been tested and meets the requirements for the class indicated.

2.6.3 Astragal on Fire and Smoke Doors

On pairs of labeled fire doors, conform to NFPA 80 and UL requirements. On smoke control doors, conform to NFPA 105.

2.7 WEATHERSTRIPPING

As specified in Section 08710, "Door Hardware."

2.7.1 Integral Gasket

Black synthetic rubber gasket with tabs for factory fitting into factory slotted frames, or extruded neoprene foam gasket made to fit into a continuous groove formed in the frame, may be provided in lieu of head and jamb seals specified in Section 08710, "Door Hardware." Insert gasket in groove after frame is finish painted. Air leakage of weatherstripped doors shall not exceed 0.5 1.25 cubic feet per minute of air per square foot of door area when tested in accordance with ASTM E 283.

2.8 HARDWARE PREPARATION

Provide minimum hardware reinforcing gages as specified in ANSI A250.6. Drill and tap doors and frames to receive finish hardware. Prepare doors and frames for hardware in accordance with the applicable requirements of ANSI A250.8 and ANSI A250.6. For additional requirements refer to ANSI/DHI A115. Drill and tap for surface-applied hardware at the project site. Build additional reinforcing for surface-applied hardware into the door at the factory. Locate hardware in accordance with the requirements of ANSI A250.8, as applicable. Punch door frames, with the exception of frames that will have weatherstripping or soundproof gasketing, to receive a minimum of two rubber or vinyl door silencers on lock side of single doors

and one silencer for each leaf at heads of double doors. Set lock strikes out to provide clearance for silencers.

2.9 FINISHES

2.9.1 Factory-Primed Finish

All surfaces of doors and frames shall be thoroughly cleaned, chemically treated and factory primed with a rust inhibiting coating as specified in ANSI A250.8.

2.9.2 Electrolytic Zinc-Coated Anchors and Accessories

Provide electrolytically deposited zinc-coated steel in accordance with ASTM A 591, Commercial Quality, Coating Class A. Phosphate treat and factory prime zinc-coated surfaces as specified in ANSI A250.8.

2.10 FABRICATION AND WORKMANSHIP

Finished doors and frames shall be strong and rigid, neat in appearance, and free from defects, waves, scratches, cuts, dents, ridges, holes, warp, and buckle. Molded members shall be clean cut, straight, and true, with joints coped or mitered, well formed, and in true alignment. Dress exposed welded and soldered joints smooth. Design door frame sections for use with the wall construction indicated. Corner joints shall be well formed and in true alignment. Conceal fastenings where practicable. Design frames in exposed masonry walls or partitions to allow sufficient space between the inside back of trim and masonry to receive calking compound.

2.10.1 Grouted Frames

For frames to be installed in exterior walls and to be filled with mortar or grout, fill the stops with strips of rigid insulation to keep the grout out of the stops and to facilitate installation of stop-applied head and jamb seals.

PART 3 EXECUTION

3.1 INSTALLATION

3.1.1 Doors

Hang doors in accordance with clearances specified in ANSI A250.8. After erection and glazing, clean and adjust hardware.

Set frames in accordance with SDI 105. Plumb, align, and brace securely until permanent anchors are set. Anchor bottoms of frames with expansion bolts or powder-actuated fasteners. Build in or secure wall anchors to adjoining construction and masonry reinforcing. Backfill frames with mortar. When an additive is provided in the mortar, coat inside of frames with corrosion-inhibiting bituminous material. For frames in exterior walls, ensure that stops are filled with rigid insulation before grout is placed.

3.1.2 Fire and Smoke Doors and Frames

Install fire doors and frames, including hardware, in accordance with NFPA 80. Install fire rated smoke doors and frames in accordance with NFPA 80 and NFPA 105.

3.2 PROTECTION

Protect doors and frames from damage. Repair damaged doors and frames prior to completion and acceptance of the project or replace with new, as directed. Wire brush rusted frames until rust is removed. Clean thoroughly. Apply an all-over coat of rust-inhibitive paint of the same type used for shop coat.

3.3 CLEANING

Upon completion, clean exposed surfaces of doors and frames thoroughly. Remove mastic smears and other unsightly marks.

3.4 SCHEDULE

Some metric measurements in this section are based on mathematical conversion of inch-pound measurements, and not on metric measurement commonly agreed to by the manufacturers or other parties. The inch-pound and metric measurements are as follows:

PRODUCTS	INCH-POUND
Door thickness	1 3/4 inches
Steel channels	16 gage
Steel Sheet	23 gage
	16 gage
	20 gage
	18 gage
Anchor bolts	3/8 inches

-- End of Section --

SECTION 08120

ALUMINUM DOORS, WINDOWS AND FRAMES
09/99

PART 1 GENERAL

1.1 REFERENCES

The publications listed below form a part of this specification to the extent referenced. The publications are referred to in the text by the basic designation only.

AMERICAN ARCHITECTURAL MANUFACTURERS ASSOCIATION (AAMA)

AAMA 603.8	(1992; Addendum 1993) Pigmented Organic Coatings on Extruded Aluminum

AMERICAN SOCIETY FOR TESTING AND MATERIALS (ASTM)

ASTM A 36/A 36M	(1997; Rev. A) Carbon Structural Steel
ASTM B 209	(1996) Aluminum and Aluminum-Alloy Sheet and Plate
ASTM B 221	(1996) Aluminum and Aluminum-Alloy Extruded Bars, Rods, Wire, Profiles, and Tubes
ASTM E 283	(1991) Rate of Air Leakage Through Exterior Windows, Curtain Walls, and Doors Under Specified Pressure Differences Across the Specimen
ASTM E 331	(1996) Water Penetration of Exterior Windows, Curtain Walls, and Doors by Uniform Static Air Pressure Difference

1.2 PERFORMANCE REQUIREMENTS

1.2.1 Structural

Provide glazing beads, moldings, and trim of not less than 0.050 inch nominal thickness.Shapes and thicknesses of framing members shall be sufficient to withstand the (psf) pounds per square foot of supported area with a deflection of not more than 1/175 times the length of the member and a safety factor of not less than 1.65 as follows:

First floor areas	55 psf

1.2.2 Air Infiltration

When tested in accordance with ASTM E 283, air infiltration shall not exceed 0.06 cubic feet per minute per square foot of fixed area at a test pressure of 6.24 pounds per square foot (50 mile per hour wind).

1.2.3 Water Penetration

When tested in accordance with ASTM E 331, there shall be no water penetration at a pressure of 8 pounds per square foot of fixed area.

1.3 SUBMITTALS

Submit the following in accordance with Section 01330, "Submittal Procedures."

SD-02 Shop Drawings

Doors, storefronts, windows, sidelights and frames; G

Show elevations size, details and construction of each door type, storefront, sidelights, windows and frames, metal gages, details of door and frame construction, methods of anchorage, glazing details, weatherstripping, provisions for and location of hardware, and details of installation.

SD-04 Samples; G

Submit three six-inch long samples of each extrusion/shape and three sets of the standard manufacturer colors (light, medium and dark bronze).

SD-08 Manufacturer's Instructions

Doors, windows and frames

Submit detail specifications and instructions for installation, adjustments, cleaning, and maintenance.

1.4 DELIVERY, STORAGE, AND HANDLING

Inspect materials delivered to the site for damage. Unload and store with minimum handling. Provide storage space in dry location with adequate ventilation, free from dust or water, and easily accessible for inspection and handling. Stack materials on nonabsorptive strips or wood platforms. Do not cover doors and frames with tarps, polyethylene film, or similar coverings. Protect finished surfaces during shipping and handling using manufacturer's standard method, except that no coatings or lacquers shall be applied to surfaces to which calking and glazing compounds must adhere.

PART 2 PRODUCTS

2.1 DOORS, STOREFRONTS, WINDOWS, SIDELIGHTS AND FRAMES

Swing-type aluminum doors and frames of size, design, and location indicated. Provide doors complete with frames, framing members, subframes, transoms, adjoining sidelights, trim, and accessories.

2.2 MATERIALS

2.2.1 Anchors

Stainless steel or steel with hot-dipped galvanized finish.

2.2.2 Weatherstripping

Continuous wool pile, silicone treated, or type recommended by door

manufacturer.

2.2.3 Aluminum Alloy for Doors, Windows and Frames

ASTM B 221, Alloy 6063-T5 for extrusions. ASTM B 209, alloy and temper best suited for aluminum sheets and strips.

2.2.4 Fasteners

Hard aluminum or stainless steel.

2.2.5 Structural Steel

ASTM A 36/A 36M.

2.3 FABRICATION

2.3.1 Doors, Storefronts, Sidelights and Window Aluminum Frames

Provide thermally improved construction system with integral low conductance thermal barrier located between exterior materials and window/storefront members exposed on the interior to eliminate direct metal to metal contact. Extruded aluminum shapes with contours approximately as indicated. Provide removable glass stops and glazing beads for frames accommodating fixed glass. Use countersunk stainless steel Phillips screws for exposed fastenings, and space not more than 12 inches o.c. Mill joints in frame members to a hairline fit, reinforce, and secure mechanically.

2.3.2 Aluminum Doors

Of type, size, and design indicated and not less than 1 3/4 inches thick. Minimum wall thickness, 0.125 inch, except beads and trim, 0.050 inch. Door sizes shown are nominal and shall include standard clearances as follows: 0.093 inch at hinge and lock stiles, 0.125 inch between meeting stiles, 0.125 inch at top rails, 0.187 inch between bottom and threshold, and 0.687 inch between bottom and floor. Bevel single-acting doors 0.063 or 0.125 inch at lock, hinge, and meeting stile edges.

2.3.2.1 Full Glazed Stile and Rail Doors

Doors shall have medium stiles and rails as indicated. Fabricate from extruded aluminum hollow seamless tubes or from a combination of open-shaped members interlocked or welded together. Fasten top and bottom rail together by means of welding or by 3/8 or 1/2 inch diameter cadmium-plated tensioned steel tie rods. Provide an adjustable mechanism of jack screws or other methods in the top rail to allow for minor clearance adjustments after installation.

2.3.3 Welding and Fastening

Where possible, locate welds on unexposed surfaces. Dress welds on exposed surfaces smoothly. Select welding rods, filler wire, and flux to produce a uniform texture and color in finished work. Remove flux and spatter from surfaces immediately after welding. Exposed screws or bolts will be permitted only in inconspicuous locations, and shall have countersunk heads. Weld concealed reinforcements for hardware in place.

2.3.4 Weatherstripping

Provide on stiles and rails of exterior doors. Fit into slots which are integral with doors or frames. Weatherstripping shall be replaceable without special tools, and adjustable at meeting rails of pairs of doors. Installation shall allow doors to swing freely and close positively. Air leakage of a single leaf weatherstripped door shall not exceed 0.5 cubic feet per minute of air per square foot of door area when tested in accordance with ASTM E 283.

2.3.5 Anchors

On the backs of subframes, provide anchors of the sizes and shapes indicated for securing subframes to adjacent construction. Anchor transom bars at ends and mullions at head and sill. Where indicated, reinforce vertical mullions with structural steel members of sufficient length to extend to the structural or framing and secure thereto. Place anchors near top and bottom of each jamb and at intermediate points not more than 25 inches apart.

2.3.6 Provisions for Hardware

Hardware is specified in Section 08710, "Door Hardware." Deliver hardware templates and hardware (except field-applied hardware) to the door manufacturer for use in fabrication of aluminum doors and frames. Cut, reinforce, drill, and tap doors and frames at the factory to receive template hardware. Provide doors to receive surface-applied hardware, except push plates, kick plates, and mop plates, with reinforcing only; drill and tap in the field. Provide hardware reinforcements of stainless steel or steel with hot-dipped galvanized finish, and secure with stainless steel screws.

2.3.7 Provisions for Glazing

Provide extruded aluminum snap-in glazing beads on interior side of doors, storefronts, windows and sidelights. Provide extruded aluminum, theft-proof, snap-in glazing beads or fixed glazing beads on exterior or security side of doors. Glazing beads shall have vinyl insert glazing gaskets. Design glazing beads to receive glass of thickness indicated or specified. Glazing steps shall comply with paragraph 2.1. Glazing is specified in Section 08810, "Glazing."

2.3.8 Finishes

Provide exposed aluminum surfaces with organic coating.

2.3.8.1 Organic Coating

Clean and prime exposed aluminum surfaces. Provide finish in accordance with AAMA 603.8 with total dry film thickness not less than 0.8 mil. The finish color shall be as indicated on the drawings and as selected from samples.

PART 3 EXECUTION

3.1 INSTALLATION

Plumb, square, level, and align frames and framing members to receive doors, transoms, adjoining sidelights, storefronts and other fixed windows. Anchor frames to adjacent construction as indicated and in accordance with manufacturer's printed instructions. Anchor bottom of each frame to rough

floor construction with 3/32 inch thick stainless steel angle clips secured to back of each jamb and to floor construction; use stainless steel bolts and expansion rivets for fastening clip anchors. Seal metal-to-metal joints between framing members as specified in Section 07900, "Joint Sealing." Hang doors to produce clearances specified in paragraph entitled "Aluminum Doors," of this section. After erection and glazing, adjust doors and hardware to operate properly.

3.2 PROTECTION FROM DISSIMILAR MATERIALS

3.2.1 Dissimilar Metals

Where aluminum surfaces come in contact with metals other than stainless steel, zinc, or small areas of white bronze, protect from direct contact by one or a combination of the following methods:

a. Paint the dissimilar metal with one coat of heavy-bodied bituminous paint.

b. Apply a good quality elastomeric sealant between the aluminum and the dissimilar metal.

c. Paint the dissimilar metal with one coat of primer and one coat of aluminum paint.

d. Use a nonabsorptive tape or gasket in permanently dry locations.

3.2.2 Drainage from Dissimilar Metals

In locations where drainage from dissimilar metals has direct contact with aluminum, provide protective paint, to prevent aluminum discoloration.

3.2.3 Masonry and Concrete

Provide aluminum surfaces in contact with mortar, concrete, or other masonry materials with one coat of heavy-bodied bituminous paint.

3.2.4 Wood or Other Absorptive Materials

Provide aluminum surfaces in contact with absorptive materials subject to frequent moisture, and aluminum surfaces in contact with treated wood, with two coats of aluminum paint or one coat of heavy-bodied bituminous paint. In lieu of painting the aluminum, the Contractor shall have the option of painting the wood or other absorptive surface with two coats of aluminum paint and sealing the joints with elastomeric sealant.

3.3 CLEANING

Upon completion of installation, clean door and frame surfaces in accordance with door manufacturer's recommended procedure. Do not use abrasive, caustic, or acid cleaning agents.

3.4 PROTECTION

Protect storefronts, sidelights, windows, doors and frames from damage and from contamination by other materials such as cement mortar. Prior to completion and acceptance of the work, restore damaged doors and frames to original condition, or replace with new ones.

-- End of Section --

SECTION 08710

DOOR HARDWARE
09/99

PART 1 GENERAL

1.1 REFERENCES

The publications listed below form a part of this specification to the extent referenced. The publications are referred to in the text by the basic designation only.

BUILDERS HARDWARE MANUFACTURERS ASSOCIATION (BHMA)

ANSI/BHMA A156.1	(1997) Butts and Hinges (BHMA 101)
ANSI/BHMA A156.2	(1996) Bored and Preassembled Locks and Latches (BHMA 601)
ANSI/BHMA A156.3	(1994) Exit Devices (BHMA 701)
ANSI/BHMA A156.4	(1992) Door Controls - Closers (BHMA 301)
ANSI/BHMA A156.5	(1992) Auxiliary Locks & Associated Products (BHMA 501)
ANSI/BHMA A156.6	(1994) Architectural Door Trim (BHMA 1001)
ANSI/BHMA A156.7	(1988) Template Hinge Dimensions
ANSI/BHMA A156.8	(1994) Door Controls - Overhead Holders (BHMA 311)
ANSI/BHMA A156.13	(1994) Mortise Locks & Latches (BHMA 621)
ANSI/BHMA A156.15	(1995) Closer Holder Release Devices
ANSI/BHMA A156.16	(1997) Auxiliary Hardware
ANSI/BHMA A156.17	(1993) Self Closing Hinges & Pivots
ANSI/BHMA A156.18	(1993) Materials and Finishes (BHMA 1301)

NATIONAL FIRE PROTECTION ASSOCIATION (NFPA)

NFPA 80	(1999) Fire Doors and Fire Windows
NFPA 101	(1997) Life Safety Code

STEEL DOOR INSTITUTE (SDI)

ANSI/SDI 100	(1991) Standard Steel Doors and Frames

UNDERWRITERS LABORATORIES (UL)

UL BMD	(1999) Building Materials Directory

1.2 SUBMITTALS

Submit the following in accordance with Section 01330, "Submittal Procedures."

SD-02 Shop Drawings

Hardware schedule; G

Keying system; G

SD-03 Product Data

Hardware items; G

SD-08 Manufacturer's Instructions

Installation

SD-10 Operation and Maintenance Data

Hardware Schedule items, Data Package 1; G

Submit data package in accordance with Section 01780, "Closeout Submittals."

SD-11 Closeout Submittals

Key bitting; G

1.3 HARDWARE SCHEDULE

Prepare and submit hardware schedule in the following form:

Hardware Item	Quantity	Size	Reference Publication Type No.	Finish	Mfr. Name and Catalog No.	Key Control Symbols	UL Mark (If fire rated and listed)	ANSI/BHMA Finish Designation

1.4 KEY BITTING CHART REQUIREMENTS

Submit key bitting charts to the Contracting Officer prior to completion of the work. Include:

a. Complete listing of all keys (AA1, AA2, etc.).

b. Complete listing of all key cuts (AA1-123456, AA2-123458).

c. Tabulation showing which key fits which door.

d. Copy of floor plan showing doors and door numbers.

e. Listing of 20 percent more key cuts than are presently required in each master system.

1.5 QUALITY ASSURANCE

1.5.1 Hardware Manufacturers and Modifications

Provide, as far as feasible, locks, hinges, pivots, and closers of one lock, hinge, pivot, or closer manufacturer's make. Modify hardware as necessary to provide features indicated or specified.

1.6 DELIVERY, STORAGE, AND HANDLING

Deliver hardware in original individual containers, complete with necessary appurtenances including fasteners and instructions. Mark each individual container with item number as shown in hardware schedule. Deliver permanent keys and removable cores to the Contracting Officer, either directly or by certified mail. Deliver construction master keys with the locks.

PART 2 PRODUCTS

2.1 TEMPLATE HARDWARE

Hardware to be applied to all doors shall be made to template. Promptly furnish template information or templates to door and frame manufacturers. Template hinges shall conform to ANSI/BHMA A156.7. Coordinate hardware items to prevent interference with other hardware.

2.2 HARDWARE FOR FIRE DOORS AND EXIT DOORS

Provide all hardware necessary to meet the requirements of NFPA 80 for fire doors and NFPA 101 for exit doors, as well as to other requirements specified, even if such hardware is not specifically mentioned under paragraph entitled "Hardware Schedule." Such hardware shall bear the label of Underwriters Laboratories, Inc., and be listed in UL BMD or labeled and listed by another testing laboratory acceptable to the Contracting Officer.

2.3 HARDWARE ITEMS

Hinges, pivots, locks, latches, exit devices, bolts, and closers shall be clearly and permanently marked with the manufacturer's name or trademark where it will be visible after the item is installed. For closers with covers, the name or trademark may be beneath the cover.

2.3.1 Hinges

ANSI/BHMA A156.1, 4 1/2 by 4 1/2 inches unless otherwise specified. Construct loose pin hinges for exterior doors and reverse-bevel interior doors so that pins will be nonremovable when door is closed. Other antifriction bearing hinges may be provided in lieu of ball-bearing hinges.

2.3.2 Pivots

ANSI/BHMA A156.4.

2.3.3 Spring Hinges

ANSI/BHMA A156.17.

2.3.4 Locks and Latches

2.3.4.1 Mortise Locks and Latches

ANSI/BHMA A156.13, Series 1000, Operational Grade 1, Security Grade 2.

2.3.4.2 Bored Locks and Latches

ANSI/BHMA A156.2, Series 4000, Grade 1.

2.3.4.3 Auxiliary Locks

ANSI/BHMA A156.5, Grade 1.

2.3.5 Exit Devices

ANSI/BHMA A156.3, Grade 1. Provide adjustable strikes for rim type and vertical rod devices. Provide open back strikes for pairs of doors with mortise and vertical rod devices. Touch bars shall be provided in lieu of conventional crossbars and arms.

2.3.6 Cylinders and Cores

Provide cylinders for new locks, including locks provided under other sections of this specification. Cylinders shall be fully compatible with products of the Best Lock Corporation and shall have interchangeable cores which are removable by a special control key. The cores shall have seven pin tumblers and shall be factory set using the A4 system and F keyway. Submit a core code sheet with the cores. The cores shall be master keyed in one system for this project. Provide construction interchangeable cores.

2.3.7 Keying System

As established by direct communication between Contracting Officer's designee and representative of Best Lock Corporation.

2.3.8 Keys

Provide keys as directed by Contracting Officer's designee pursuant to establishment of keying requirements.

2.3.9 Door Bolts

ANSI/BHMA A156.16. Provide dustproof strikes for bottom bolts, including doors having metal thresholds. Automatic latching flush bolts: ANSI/BHMA A156.3, Type 25.

2.3.10 Closers

ANSI/BHMA A156.4, Series C02000, Grade 1, with PT 4C. Provide with brackets, arms, mounting devices, fasteners, full size covers and other features necessary for the particular application. Provide multi-size closers, barrier-free. Provide manufacturer's 10 year warranty.

2.3.10.1 Identification Marking

Engrave each closer with manufacturer's name or trademark, date of manufacture, and manufacturer's size designation located to be visible after installation.

2.3.11 Overhead Holders

ANSI/BHMA A156.8.

2.3.12 Closer Holder-Release Devices

ANSI/BHMA A156.15.

2.3.13 Door Protection Plates

ANSI/BHMA A156.6.

2.3.13.1 Sizes of Kick Plates

Size as indicated in Hardware Headings; width shall be 2 inches less than door width; width for pairs of doors shall be one inch less than door width. Height of kick plates shall be 10 inches for flush doors.

2.3.14 Door Stops and Silencers

ANSI/BHMA A156.16. Silencers Type L03011. Provide three silencers for each single door, two for each pair.

2.3.15 Thresholds

Refer to sill details where specifically directed in the Hardware Headings.

2.3.16 Weather Stripping

Manufacturer NGP is used as exemplary of the product type needed. Equivalent type by others is acceptable.

2.3.17 Special Tools

Provide special tools, such as spanner and socket wrenches and dogging keys, required to service and adjust hardware items.

2.4 FASTENERS

Provide fasteners of proper type, quality, size, quantity, and finish with hardware. Fasteners exposed to weather shall be of nonferrous metal or stainless steel. Provide fasteners of type necessary to accomplish a permanent installation.

2.5 FINISHES

ANSI/BHMA A156.18. Hardware shall have BHMA 630 finish (satin stainless steel), unless specified otherwise. Provide items not manufactured in stainless steel in BHMA 626 finish (satin chromium plated) over brass or bronze, except surface door closers which shall have aluminum paint finish, and except steel hinges which shall have BHMA 652 finish (satin chromium plated). Hinges for exterior doors shall be stainless steel with BHMA 630 finish. BHMA 630 and BHMA 626 shall be considered interchangeable for exit device finish.

2.6 KEY CABINET AND CONTROL SYSTEM

ANSI/BHMA A156.5. Type required to yield a capacity (number of hooks) 50 percent greater than the number of key changes used for door locks. Verify location with Contracting Officer.

PART 3 EXECUTION

3.1 INSTALLATION

Install hardware in accordance with manufacturers' printed instructions. Fasten hardware to wood surfaces with full-threaded wood screws or sheet metal screws. Provide machine screws set in expansion shields for fastening hardware to solid concrete and masonry surfaces. Provide toggle bolts where required for fastening to hollow core construction. Provide through bolts where necessary for satisfactory installation.

3.1.1 Weather Stripping Installation

Handle and install weather stripping so as to prevent damage. Provide full contact, weather-tight seals. Doors shall operate without binding.

3.1.1.1 Stop-Applied Weather Stripping

Fasten in place with color-matched sheet metal screws not more than 9 inches o.c. after doors and frames have been finish painted.

3.1.2 Lightproofing and Soundproofing Installation

Install as specified for stop-applied weather stripping.

3.1.3 Threshold Installation

Extend thresholds the full width of the opening and notch end for jamb stops. Set thresholds in a full bed of sealant and anchor to floor with cadmium-plated, countersunk, steel screws in expansion sleeves.

3.2 FIRE DOORS AND EXIT DOORS

Install hardware in accordance with NFPA 80 for fire doors, NFPA 101 for exit doors.

3.3 HARDWARE LOCATIONS

ANSI/SDI 100, unless indicated or specified otherwise.

a. Kick and Armor Plates: Push side of single-acting doors. Both sides of double-acting doors.

3.4 KEY CABINET AND CONTROL SYSTEM

Locate where directed. Tag one set of file keys and one set of duplicate keys. Place other keys in appropriately marked envelopes, or tag each key. Furnish complete instructions for setup and use of key control system. On tags and envelopes, indicate door and room numbers or master or grand master key.

3.5 FIELD QUALITY CONTROL

After installation, protect hardware from paint, stains, blemishes, and other damage until acceptance of work. Submit notice of testing 15 days before scheduled, so that testing can be witnessed by the Contracting Officer. Adjust hinges, locks, latches, bolts, holders, closers, and other items to operate properly. Demonstrate that permanent keys operate respective locks, and give keys to the Contracting Officer. Correct, repair, and finish, as directed, errors in cutting and fitting and damage

to adjoining work.

3.6 HARDWARE SETS

Heading #1

6	Hinge	A5111 4.5 x 4.5 NRP	630
2	Flushbolt	L14251	626
1	Dust-proof Strike	threshold mount	626
1	Lockset	93K-7-D-15C-S3	626
1	Lock Guard	for cylindrical lock	630
2	Closer-Stop-Holder	C02061 PT4H\D\G (e.g. H Spring CUSH)	689
1	Threshold	NGP 425 (for 5\8" uc) or 525 (for 3\4" uc) or similar	
2	Sweep-Drip	NGP C627A or similar	
1	Overhead Drip Cap	NGP 16A or similar - full frame width	
1	Set Weatherstrip	NGP 700 SA H x J or similar - hdwe compatible, do not interrupt head piece	
1	Gasket (in astragal)	NGP 2525 B full height - overlapping astragal on inside inactive by HM door mfr	

Heading #2

3	Hinge	A5111 4.5 x 4.5 NRP	630
1	Lockset	93K-7-D-15C-S3	626
1	Lock Guard	for cylindrical lock	630
1	Closer-Stop-Holder	C02061 PT4H\D\G (e.g. H Spring CUSH)	689
1	Threshold	NGP 425 (for 5\8" uc) or 525 (for 3\4" uc) or similar	
1	Sweep-Drip	NGP C627A or similar	
1	Overhead Drip Cap	NGP 16A or similar - full frame width	
1	Set Weatherstrip	NGP 700 SA H x J or similar - hdwe compatible, do not interrupt head piece	

Heading #3, 4, 5, 6, 7 and 8 NOT USED

Heading #9

3	Hinge	A8111 4.5 x 4.5	652
1	Privacy Set	93K-0-L-15C-S3	626
1	Closer	C02011 PT4H-BF\D	689
1	Kickplate	J102 10" x 2" LDW	630
1	Wall Stop	L52251	630
1	Gasket H x J	NGP 2525 B or similar	

Heading #9.1

3	Hinge	A8111 4.5 x 4.5	652

Heading #9.1

1	Lockset	93K-7-R-15C-S3	626
1	Closer	C02011 PT4H-BF\D	689
1	Kickplate	J102 10" x 2" LDW	630
1	Wall Stop	L52251	630
1	Gasket H x J	NGP 2525 B or similar	

Heading #10, 11, 12 and 13 NOT USED

Heading #14

3	Hinge	A8111 4.5 x 4.5	652
1	Lockset	93K-7-AB-15C-S3	626
1	Wall Stop	L52251	630
3	Silencer		

Heading #15

3	Hinge	A8111 4.5 x 4.5	652
1	Push Plate	J304 6 x 16	630
1	Push Plate	J405 4 x 16 10 CTC	630
1	Closer	C02011 PT4H-BF\D	689
1	Kickplate	J102 10" x 2" LDW	630
1	Wall Stop	L52251	630
3	Silencer		

Heading #16

6	Hinge	A5111 4.5 x 4.5 NRP	630
2	Push-Pull Bar Set	J501 x J401 10" CTC 1" Rnd Sect,One End BTB to Top	630
2	Closer-Stop-Holder	C02061 PT4H\D\G (e.g. H Spring CUSH)	689
2	Blade Stop Spacer &	Shoe Support & Drop Plate as required	

Provide ADA approved flat saddle. See sill detail. Sweeps, meeting-stiles, and perimeter weatherstrip integral to doors and frame by mfr.

Heading #17

3	Hinge	A5111 4.5 x 4.5 NRP	630
1	Push-Pull Bar Set	J501 x J401 10" CTC 1" Rnd Sect,One End BTB to Top	630
1	Deadbolt	E0221 (e.g. MS1850) Front and Backset as Req.,Turnpiece Inside	628
1	Cylinder	Best Lock	626
1	Closer-Stop-Holder	C02061 PT4H\D\G (e.g. H Spring CUSH)	689
1	Blade Stop Spacer &	Shoe Support & Drop Plate as required	

Provide ADA approved flat saddle. See sill detail. Sweep and perimeter

Heading #17
weatherstrip integral to door and frame by mfr.

Heading #18

1	Padlock	Best Lock, brass body; verify size and shackle height with fence gate mfr.

Hardware for aluminum doors shall be provided under this section. DeliverHardware templates and hardware, except field-applied hardware to the aluminum door and frame manufacturer for use in fabricating the doors and frames.

-- End of Section --

SECTION 08810

GLASS AND GLAZING
05/97

PART 1 GENERAL

1.1 REFERENCES

The publications listed below form a part of this specification to the extent referenced. The publications are referred to in the text by basic designation only.

AMERICAN NATIONAL STANDARDS INSTITUTE (ANSI)

ANSI Z97.1	(1984; R 1994) Safety Performance Specifications and Methods of Test for Safety Glazing Materials Used in Buildings

AMERICAN SOCIETY FOR TESTING AND MATERIALS (ASTM)

ASTM C 509	(1994) Elastomeric Cellular Preformed Gasket and Sealing Material
ASTM C 669	(1995) Glazing Compounds for Back Bedding and Face Glazing of Metal Sash
ASTM C 864	(1999) Dense Elastomeric Compression Seal Gaskets, Setting Blocks, and Spacers
ASTM C 920	(1998) Elastomeric Joint Sealants
ASTM C 1036	(1991; R 1997) Flat Glass
ASTM C 1048	(1997b) Heat-Treated Flat Glass - Kind HS, Kind FT Coated and Uncoated Glass
ASTM D 395	(1998) Rubber Property - Compression Set
ASTM E 773	(1997) Accelerated Weathering of Sealed Insulating Glass Units
ASTM E 774	(1997) Classification of the Durability of Sealed Insulating Glass Units
ASTM E 1300	(1998) Determining the Minimum Thickness and Type of Glass Required to Resist a Specified Load

COMMERCIAL ITEM DESCRIPTIONS (CID)

CID A-A-378	(Basic) Putty Linseed Oil Type, (for Wood-Sash-Glazing)

GLASS ASSOCIATION OF NORTH AMERICA (GANA)

GANA Glazing Manual (1997) Glazing Manual

GANA Standards Manual (1995) Engineering Standards Manual

NATIONAL FIRE PROTECTION ASSOCIATION (NFPA)

NFPA 80 (1999) Fire Doors and Fire Windows

1.2 SUBMITTALS

Government approval is required for submittals with a "G" designation; submittals not having a "G" designation are for information only. When used, a designation following the "G" designation identifies the office that will review the submittal for the Government. The following shall be submitted in accordance with Section 01330 SUBMITTAL PROCEDURES:

SD-02 Shop Drawings

Installation

Drawings showing complete details of the proposed setting methods, mullion details, edge blocking, size of openings, frame details, materials, and types and thickness of glass.

SD-03 Product Data

Insulating Glass
Glazing Accessories

Manufacturer's descriptive product data, handling and storage recommendations, installation instructions, and cleaning instructions.

SD-04 Samples

Glass Mirrors

Insulating Glass

Tempered Glass

Two 8 x 10 inch samples of each of the above referenced panels, units and pieces.

SD-07 Certificates

Insulating Glass

Certificates stating that the glass meets the specified requirements. Labels or manufacturers marking affixed to the glass will be accepted in lieu of certificates.

1.3 SYSTEM DESCRIPTION

Glazing systems shall be fabricated and installed watertight and airtight to withstand thermal movement and wind loading without glass breakage, gasket failure, deterioration of glazing accessories, and defects in the work. Glazed panels shall comply with the safety standards, as indicated in accordance with ANSI Z97.1. Glazed panels shall comply with indicated

wind/snow loading in accordance with ASTM E 1300.

1.4 DELIVERY, STORAGE AND HANDLING

Glazing compounds shall be delivered to the site in the manufacturer's unopened containers. Glass shall be stored indoors in a safe, well ventilated dry location in accordance with manufacturer's instructions, and shall not be unpacked until needed for installation. Glass shall not be stored on site over 1 month.

1.5 PROJECT/SITE CONDITIONS

Glazing work shall not be started until outdoor temperature is above 40 degrees F and rising, unless procedures recommended by glass manufacturer and approved by Contracting Officer are made to warm the glass and rabbet surfaces. Ventilation shall be provided to prevent condensation of moisture on glazing work during installation. Glazing work shall not be performed during damp or raining weather.

1.6 WARRANTY

1.6.1 Insulating Glass

Manufacturer shall warrant the insulating glass to be free of fogging or film formation on the internal glass surfaces caused by failure of the hermetic seal for a period of 10 years from Date of Substantial Completion. Warranty shall be signed by manufacturer.

PART 2 PRODUCTS

2.1 INSULATING GLASS

Insulating glass shall be Class A preassembled units of dual-seal construction consisting of lites of glass separated by an aluminum, steel, or stainless steel, spacer and dehydrated space conforming to ASTM E 773 and ASTM E 774. Spacer shall be roll-formed, with bent or tightly welded or keyed and sealed joints to completely seal the spacer periphery and eliminate moisture and hydrocarbon vapor transmission into airspace through the corners. Primary seal shall be compressed polyisobutylene and the secondary seal shall be a specially formulated silicone. Glass types shall be as follows:

2.1.1 Tinted, Clear, and Laminated Insulating Glass Units

For all units, unless noted otherwise:

1-inch insulated unit performance shall be 0.31 U-Value/Winter, 0.33 U-Value Summer, 0.45 Solar Heat Gain Coefficient, 44% Visible Light Transmission and 7% Outdoor Visible Light Reflectance, unless noted otherwise.

Anti-reflective low-emissivity coating (Low-E) on No. 3 surface (outside surface of interior pane), Quality q3 - glazing select.

Panels shall conform with ASTM C 1036, ASTM C 1048, ASTM C 1201 and 16 CFR 1201.

Laminated glass shall be bonded together with 0.030 inch thick PVB interlayer under pressure, or alternatives such as resin laminates.

Specific insulated glass types, reference drawings for locations:

a. Type A: General locations include windows fixed glazing, reference drawings. Outboard pane shall be ¼ inch Type I annealed glass, Class 2-bronze tinted, Quality q3 - glazing select. Inboard panel shall be laminated glass consisting of two 1/8-inch layers of Type I annealed glass, Class 1 - clear.

b. Type B: General locations include aluminum doors, storefront, reference drawings. Outboard panel shall be laminated glass consisting of two 1/8-inch layers of Type I annealed glass, Class 2 - bronze. Inboard panel shall be laminated glass consisting of two 1/8-inch layers of Type I annealed glass, Class 1 - clear. All glass panels at aluminum door number 101 and 100A and Frame Type 4, Class 1 - clear.

2.2 HEAT-TREATED GLASS

2.2.1 Tempered Glass

Tempered glass at interior door lites as shown shall be kind FT fully tempered transparent flat type, Class 1-clear, Condition A uncoated surface, Quality q3 - glazing select, 85 percent light transmittance, 0.83 percent shading coefficient conforming to ASTM C 1048 and GANA Standards Manual. Glass shall be clear.

2.2.2 Heat-Strengthened Glass

Heat-strengthened glass shall be kind HS heat-strengthened transparent flat type, Class 2-tinted, Condition A uncoated surface, Quality q3 - glazing select, conforming to ASTM C 1048. Color shall be bronze as indicated on drawings.

2.3 MIRRORS

2.3.1 Glass Mirrors TA-1 (Reference Toilet Accessories Legend on Drawings)

Glass for mirrors shall be Type I transparent flat type, Class 1-clear, Glazing Quality q1 1/4 inch thick conforming to ASTM C 1036. Glass color shall be clear. Glass shall be coated on one surface with silver coating, copper protective coating, and mirror backing paint. Silver coating shall be highly adhesive pure silver coating of a thickness which shall provide reflectivity of 83 percent or more of incident light when viewed through 1/4 inch thick glass, and shall be free of pinholes or other defects. Copper protective coating shall be pure bright reflective copper, homogeneous without sludge, pinholes or other defects, and shall be of proper thickness to prevent "adhesion pull" by mirror backing paint. Mirror backing paint shall consist of two coats of special scratch and abrasion-resistant paint, and shall be baked in uniform thickness to provide a protection for silver and copper coatings which will permit normal cutting and edge fabrication.

2.3.2 Mirror Accessories

2.3.2.1 Mastic

Mastic for setting mirrors shall be a polymer type mirror mastic resistant to water, shock, cracking, vibration and thermal expansion. Mastic shall

be compatible with mirror backing paint, and shall be approved by mirror manufacturer.

2.3.2.2 Mirror Frames

Mirrors shall be provided with mirror frames (J-mold channels) fabricated of one-piece roll-formed Type 304 stainless steel with No. 4 brushed satin finish and concealed fasteners which will keep mirrors snug to wall. Frames shall be 1-1/4 x 1/4 x 1/4 inch continuous at top and bottom of mirrors. Concealed fasteners of type to suit wall construction material shall be provided with mirror frames.

2.3.2.3 Mirror Clips

Concealed fasteners of type to suit wall construction material shall be provided with clips.

2.4 GLAZING ACCESSORIES

2.4.1 Preformed Tape

Preformed tape shall be elastomeric rubber extruded into a ribbon of a width and thickness suitable for specific application. Tape shall be of type which will remain resilient, have excellent adhesion, and be chemically compatible to glass, metal, or wood.

2.4.2 Sealant

Sealant shall be elastomeric conforming to ASTM C 920, Type S or M, Grade NS, Class 12.5, Use G, of type chemically compatible with setting blocks, preformed sealing tape and sealants used in manufacturing insulating glass. Color of sealant shall be as selected.

2.4.3 Glazing Gaskets

Glazing gaskets shall be extruded with continuous integral locking projection designed to engage into metal glass holding members to provide a watertight seal during dynamic loading, building movements and thermal movements. Glazing gaskets for a single glazed opening shall be continuous one-piece units with factory-fabricated injection-molded corners free of flashing and burrs. Glazing gaskets shall be in lengths or units recommended by manufacturer to ensure against pull-back at corners. Glazing gasket profiles shall be as indicated on drawings.

2.4.3.1 Fixed Glazing Gaskets

Fixed glazing gaskets shall be closed-cell (sponge) smooth extruded compression gaskets of cured elastomeric virgin neoprene compounds conforming to ASTM C 509, Type 2, Option 1.

2.4.3.2 Wedge Glazing Gaskets

Wedge glazing gaskets shall be high-quality extrusions of cured elastomeric virgin neoprene compounds, ozone resistant, conforming to ASTM C 864, Option 1, Shore A durometer between 65 and 75.

2.4.3.3 Aluminum Framing Glazing Gaskets

Glazing gaskets for aluminum framing shall be permanent, elastic,

non-shrinking, non-migrating, watertight and weathertight.

2.4.4 Putty and Glazing Compound

Glazing compound shall conform to ASTM C 669 for face-glazing metal sash. Putty shall be linseed oil type conforming to CID A-A-378for face-glazing primed wood sash. Putty and glazing compounds shall not be used with insulating glass or laminated glass.

2.4.5 Setting and Edge Blocking

Neoprene setting blocks shall be dense extruded type conforming to ASTM D 395, Method B, Shore A durometer between 70 and 90. Edge blocking shall be Shore A durometer of 50 (+ or - 5). Silicone setting blocks shall be required when blocks are in contact with silicone sealant. Profiles, lengths and locations shall be as required and recommended in writing by glass manufacturer.

PART 3 EXECUTION

3.1 PREPARATION

Openings and framing systems scheduled to receive glass shall be examined for compliance with approved shop drawings, GANA Glazing Manual and glass manufacturer's recommendations including size, squareness, offsets at corners, presence and function of weep system, face and edge clearance requirements and effective sealing between joints of glass-framing members. Detrimental materials shall be removed from glazing rabbet and glass surfaces and wiped dry with solvent. Glazing surfaces shall be dry and free of frost.

3.2 INSTALLATION

Glass and glazing work shall be performed in accordance with approved shop drawings, GANA Glazing Manual, glass manufacturer's instructions and warranty requirements. Glass shall be installed with factory labels intact and removed only when instructed. Wired glass and fire/safety rated glass shall be installed in accordance with NFPA 80. Edges and corners shall not be ground, nipped or cut after leaving factory. Springing, forcing or twisting of units during installation will not be permitted.

3.3 CLEANING

Upon completion of project, outside surfaces of glass shall be washed clean and the inside surfaces of glass shall be washed and polished in accordance with glass manufacturer's recommendations.

3.4 PROTECTION

Glass work shall be protected immediately after installation. Glazed openings shall be identified with suitable warning tapes, cloth or paper flags, attached with non-staining adhesives. Reflective glass shall be protected with a protective material to eliminate any contamination of the reflective coating. Protective material shall be placed far enough away from the coated glass to allow air to circulate to reduce heat buildup and moisture accumulation on the glass. Glass units which are broken, chipped, cracked, abraded, or otherwise damaged during construction activities shall be removed and replaced with new units.

-- End of Section --

SECTION 09250

GYPSUM WALLBOARD
04/01

PART 1 GENERAL

1.1 REFERENCES

The publications listed below form a part of this specification to the extent referenced. The publications are referred to in the text by basic designation only.

AMERICAN NATIONAL STANDARDS INSTITUTE (ANSI)

ANSI A108.11	(1992) Interior Installation of Cementitious Backup Units
ANSI A118.9	(1992) Test Methods and Specifications for Cementitious Backer Units

AMERICAN SOCIETY FOR TESTING AND MATERIALS (ASTM)

ASTM A 580/A 580M	(1998) Stainless Steel Wire
ASTM A 853	(1993; R 1998) Steel Wire, Carbon, for General Use
ASTM B 164	(1998) Nickel-Copper Alloy Rod, Bar, and Wire
ASTM C 36/C 36M	(1999) Gypsum Wallboard
ASTM C 475	(1994) Joint Compound and Joint Tape for Finishing Gypsum Board
ASTM C 557	(1999) Adhesive for Fastening Gypsum Wallboard to Wood Framing
ASTM C 630/C 630M	(2000) Water-Resistant Gypsum Backing Board
ASTM C 645	(2000) Nonstructural Steel Framing Members
ASTM C 665	Specification for Mineral-Fiber Blanket Thermal Insulation for Light Frame Construction and Manufactured Housing
ASTM C 754	(1999a) Installation of Steel Framing Members to Receive Screw-Attached Gypsum Panel Products
ASTM C 834	(1995) Latex
ASTM C 840	(1999) Application and Finishing of Gypsum Board
ASTM C 955	(2000a) Load-Bearing (Transverse and

	Axial) Steel Studs, Runners (Tracks), and Bracing or Bridging for Screw Application of Gypsum Panel Products and Metal Plaster Bases
ASTM C 1002	(2000) Steel Drill Screws for the Application of Gypsum Panel Products or Metal Plaster Bases
ASTM C 1047	(1999) Accessories for Gypsum Wallboard and Gypsum Veneer Base
ASTM E 136	Test Method for Behavior of Materials in a Vertical Tube Furnace at 750 deg. C

GYPSUM ASSOCIATION (GA)

GA 214	(1996) Recommended Levels of Gypsum Board Finish
GA 216	(1996) Application and Finishing of Gypsum Board
GA 600	(1997) Fire Resistance Design Manual

UNDERWRITERS LABORATORIES (UL)

UL Fire Resist Dir	(1999) Fire Resistance Directory (2 Vol.)

1.2 SYSTEM DESCRIPTION

1.2.1 Fire-Rated Construction

Joints of fire-rated gypsum board enclosures shall be closed and sealed in accordance with UL test requirements or GA requirements, and as required to meet pressurization requirements. Penetrations through rated partitions and ceilings shall be sealed tight in accordance with tested systems. Fire ratings shall be as indicated.

1.2.2 Pressurized Enclosures

Pressurized fire-rated gypsum board enclosures shall allow the mechanical and electrical life-safety systems to operate in accordance with the design intent. Air pressure within elevator shaft shall be 7.5 psf. Air pressure within stair shaft shall be 5.0 psf. Maximum mid-span deflection shall be L/360.

1.3 SUBMITTALS

Government approval is required for submittals with a "G" designation; submittals not having a "G" designation are for information only. When used, a designation following the "G" designation identifies the office that will review the submittal for the Government. The following shall be submitted in accordance with Section 01330 SUBMITTAL PROCEDURES:

SD-02 Shop Drawings

Steel Framing
Control Joints

Fire-Resistant Assemblies

Drawings and installation details for ceiling framing, furring, special wall framing, and framed openings in walls and ceilings.

SD-07 Certificates

Gypsum Board
Cementitious Backer Units
Water-Resistant Gypsum Board
Steel Framing
Fire-Rated Gypsum Board

Certificates stating that the steel framing and gypsum wallboard meet the specified requirements.

1.4 QUALIFICATIONS

Manufacturer shall specialize in manufacturing the types of material specified and shall have a minimum of 5 years of documented successful experience. Installer shall specialize in the type of gypsum board work required and shall have a minimum of 3 years of documented successful experience.

1.5 DELIVERY, STORAGE AND HANDLING

Materials shall be delivered in original containers bearing the name of manufacturer, contents, and brand name. Materials shall be stored off the ground in a weathertight structure for protection. Gypsum boards shall be stacked flat, off floor and supported to prevent sagging and warpage. Adhesives and joint materials shall be stored in accordance with manufacturer's printed instructions. Damaged or deteriorated materials shall be removed from jobsite.

1.6 ENVIRONMENTAL CONDITIONS

Environmental conditions for application and finishing of gypsum board shall be in accordance with ASTM C 840. During the application of gypsum board without adhesive, a room temperature of not less than 40 degrees F shall be maintained. During the application of gypsum board with adhesive, a room temperature of not less than 50 degrees F shall be maintained for 48 hours prior to application and continuously afterwards until completely dry. Building spaces shall be ventilated to remove water not required for drying joint treatment materials. Drafts shall be avoided during dry hot weather to prevent materials from drying too rapidly.

PART 2 MATERIALS

2.1 NON-LOADBEARING STUD WALLS

2.1.1 Studs

Studs for non-loadbearing walls shall conform to ASTM C 645. Studs shall be C-shaped, roll formed steel with minimum uncoated design thickness of 0.0329 in made from G40 hot-dip galvanized coated sheet unless noted otherwise on the drawings. Reference specification Section 04220 for "Non-Bearing Masonry Veneer/Steel Stud Walls"

2.1.2 Runner Tracks

Floor and ceiling runner tracks shall conform to ASTM C 645. Tracks shall be prefabricated, U-shaped with minimum 1 inch flanges, unpunched web, thickness to match studs, made from G40 hot-dip galvanized coated sheet.

2.1.3 Bridging

Bridging for C-shaped rolled form steel framed walls shall conform to ASTM C 955 unless noted otherwise on the drawings. Bridging shall be minimum 3/4 x 3/4 inch cold-rolled steel channel with weld attachment clips at each stud or V-bar type weld or screw attached to each stud flange. Bridging shall be adequate to provide lateral support for the stud.

2.2 SUSPENDED CEILING FRAMING

Suspended ceiling framing system shall have the capability to support the finished ceiling, light fixtures, air diffusers, access panels (Section 05500) and accessories, as shown. The suspension system shall have a maximum deflection of L/240. Carrying channels shall be formed from minimum 0.0548 in thick cold-rolled steel, 1-1/2 x 3/4 inch. Furring members shall be formed from cold-rolled steel, 7/8 x 2-9/16 inch. Carrying channels and furring members shall be made from hot-dip galvanized coated sheet.

2.3 GYPSUM BOARD

Gypsum board shall be asbestos-free. Gypsum board shall have square-cut ends, tapered or beveled edges and shall be maximum possible length. Gypsum board thickness shall be as shown.

2.3.1 Standard Gypsum Board

Regular gypsum board shall conform to ASTM C 36/C 36M, and shall be 48 inches wide.

2.3.2 Regular Water-Resistant Gypsum Backing Board

ASTM C 630/C 630M

2.3.2.1 Regular

48 inches wide, 5/8 inch thick, tapered edges.

2.3.2.2 Type X (Special Fire-Resistant)

48 inches wide, 5/8 inch thick, tapered edges.

2.3.3 Fire-Rated Gypsum Board

Fire-rated gypsum board shall conform to ASTM C 36/C 36M, and shall be Type X or Type C as required, 48 inches wide.

2.3.4 Cementitious Backer Units

Provide cementitious backer units complying with ANSI A118.9 and ANSI A108.11 OF 5/8-inch thickness and 48-inch widths and maximumlength to minimize end-to-end butt joints.

2.3.5 Exterior Sheathing Board

Reference specification Section 04220 Non-bearing Masonry Veneer/Steel Stud Walls

2.4 TRIM, MOLDINGS, AND ACCESSORIES

2.4.1 Taping and Embedding Compound

Taping and embedding compound shall conform to ASTM C 475 and manufacturer standards. Compound shall be specifically formulated and manufactured for use in embedding tape at gypsum wallboard joints and fastener heads, and shall be compatible with tape and substrate.

2.4.2 Finishing or Topping Compound

Finishing or topping compound shall conform to ASTM C 475. Compound shall be specifically formulated and manufactured for use as a finishing compound for gypsum board.

2.4.3 All-Purpose Compound

All-purpose compound shall be specifically formulated and manufactured to use as a taping and finishing compound, and shall be compatible with tape and substrate.

2.4.4 Joint Tape

Joint tape shall conform to ASTM C 475 and shall be as recommended by gypsum board manufacturer.

2.4.5 Trim, Control Joints, Beads, Stops and Nosings

Items used to protect edges, corners, and to provide architectural features shall be in accordance with ASTM C 1047.

2.5 FASTENINGS AND ADHESIVES

2.5.1 Screws

Screws shall conform to ASTM C 1002. Screws shall be self-drilling and self-tapping steel, Type G for gypsum board to gypsum board, Type S for wood or light-gauge steel framing.

2.5.2 Adhesives

Adhesives shall conform to ASTM C 557. Adhesives shall be formulated to bond gypsum board to wood framing members. For securing gypsum board to metal framing, adhesive shall be as recommended by gypsum board manufacturer.

2.5.3 Hangers

Suspended ceiling runner channel hangers shall be soft, annealed steel wire not less than No. 8 SWG, conforming to ASTM A 853 or flat iron or steel straps, at least 3/32 x 7/8 inch size, coated with zinc, cadmium, or rust-inhibiting paint.

2.5.4 Wire and Clip Type Fastenings

Tie wire, clips, rings, and other fastenings shall be corrosion-resisting steel conforming to ASTM A 580/A 580M, composition 302, 304, or 316, Condition A, or nickel-copper alloy conforming to ASTM B 164, annealed condition except that walls, partitions, and other vertical surfaces not incorporated in ceiling construction may be erected with soft, annealed steel conforming to ASTM A 853.

2.5.4.1 Tie Wire

Tie wire for constructing partitions and vertical furring, for securing metal lath to supports, and for lacing shall be not less than No. 18 SWG. Tie wire for other applications shall be not less than No. 16 SWG.

2.5.4.2 Clips

Clips used in lieu of tie wire for securing the furring channels to the runner channels in ceiling construction shall be made from strip not less than 1/8 inch thick or shall be hairpin clip, formed of wire not less than 0.01620 inch nominal diameter. Other clips and rings or fastenings of similar materials shall be equivalent in holding power to that provided by tie wire for the specific application.

2.6 SOUND ATTENUATION BLANKETS

Sound attenuation blankets shall comply with ASTM C 665, Type I and ASTM E 136. All blankets shall have a minimum thickness of 3-1/2 inches.

2.7 ACOUSTICAL SEALANT

Manufacturer standard nonsag, paintable, nonstaining latex sealant complying with ASTM C 834, for reducing airborne sound transmission through perimeter joints and openings.

PART 3 EXECUTION

3.1 INTERIOR WALL FRAMING

Steel framing and furring members shall be installed in accordance with ASTM C 754. Members shall be in alignment with spacings not to exceed the maximum spacings indicated on drawings. Runners shall be aligned accurately at the floor and ceiling and securely anchored.

3.1.1 Wall Openings

The framing system shall provide for the installation and anchorage of the required subframes or finish frames for wall openings at doors, pass-through openings, and access panels. Partitions abutting continuous suspended ceilings shall be strengthened for rigidity at rough openings of more than 30 inches wide. Studs at openings shall be 0.0329 in minimum bare metal thickness and spot grouted at jamb anchor inserts. Double studs shall be fastened together with screws and secured to floor and overhead runners. Two studs shall be used for framing doors over 36 inches wide and extra-heavy doors such as acoustical (STC50) rated doors.

3.1.2 Wall Control Joints

Control joints for expansion and contraction in the walls shall be constructed with double studs installed 1/2 inch apart in interior walls or wall furrings where indicated on drawings. Control joint spacing shall

not exceed 30 feet. Ceiling-height door frames may be used as vertical control joints. Door frames of less than ceiling height may be used as control joints only if standard control joints extend to ceiling from both corners of top of door frame. Control joints between studs shall be filled with firesafing insulation in fire rated partitions.

3.1.3 Blocking

Blocking shall be provided as necessary for mounted equipment. Blocking shall be metal or wood and shall be cut to fit between framing members. Blocking shall be rigidly anchored to the framing members. Under no circumstances will accessories or other wall mounted equipment be anchored directly to gypsum wallboard.

3.2 SUSPENDED CEILING FRAMING

Suspended ceiling system framing shall be installed in accordance with ASTM C 754.

3.2.1 Hangers

Hangers shall be spaced not more than 48 inches along runner channels and 36 inches in the other direction or 42 inches in both directions unless otherwise indicated. Locations of hanger wires shall be coordinated with other work. Hangers at ends of runner channels shall be located not more than 6 inches from wall. Hanger wire shall be looped around bottom chord of open-web steel joists, or secured to structural elements with suitable fasteners. Sags or twists which develop in the suspended system shall be adjusted. Damaged or faulty parts shall be replaced.

3.2.2 Main Runners

Main runner channels shall be installed in accordance with ASTM C 754. Hanger wires shall be double strand saddle-tied to runner channels and the ends of hanger wire shall be twisted three times around itself. Main runners shall be located to within 6 inches of the paralleling wall to support the ends of cross furring. Where main runners are spliced, ends shall be overlapped 12 inches with flanges of channels interlocked, and shall be securely tied at each end of splice with wire looped twice around the channels.

3.2.3 Furring Channels

Furring channels shall be spaced in accordance with ASTM C 754. Furring channels shall be secured to the runner channels and to structural supports at each crossing with tie wire, hairpin clips, or equivalent fastenings. Furring channels shall be located within 2 inches of parallel walls and beams, and shall be cut 1/2 inch short of abutting walls.

3.2.4 Ceiling Openings

Support members shall be provided as required at ceiling openings for access panels, recessed light fixtures, and air supply or exhaust. Support members shall be not less than 1-1/2 inch main runner channels and vertically installed suspension wires or straps shall be located to provide at least the minimum support specified herein for furring and wallboard attachment. Intermediate structural members not a part of the structural system, shall be provided for attachment or suspension of support members.

3.2.5 Light Fixtures and Air Diffusers

Light fixtures and air diffusers shall be supported directly from suspended ceiling runners. Wires shall be provided at appropriate locations to carry the weight of recessed or surface mounted light fixtures and air diffusers.

3.2.6 Control Joints

A control joint or intermediate blocking shall be installed where ceiling framing members change direction.

3.2.6.1 Interior Ceilings With Perimeter Relief

Control joints shall be installed so that linear dimensions between control joints shall not exceed 50 feet in either direction nor more than 2500 square feet.

3.3 APPLICATION OF GYPSUM BOARD

Gypsum board shall be installed in accordance with ASTM C 840, GA 214 and GA 216 and as specified. Paragraph 17.3.1 GENERAL of ASTM C 840 which permits usage of water resistant gypsum board as a base for adhesive application of ceramic or plastic tile on ceilings, does not apply. Edges and ends of gypsum boards shall be cut to obtain neat fitting joints. End joints of adjoining boards shall be staggered, and shall be staggered on opposite sides of wall. Boards shall be applied with moderate contact without forcing in place. Holes for pipes, fixtures or other small openings shall be cut with a tool which will provide a neat fit. Screws shall be driven so that the heads are slightly below the plane of paper face. Fracturing the paper face or damaging the core shall be avoided. Trim shall be installed at external and internal angles formed by the intersecting gypsum board surfaces with other surfaces. Corner beads shall be installed to vertical and horizontal corners in accordance with manufacturer's published instructions. Boards of maximum practical length shall be used so that an absolute minimum number of end joints occur. Gypsum board partitions in rooms with ceiling heights less than 10 feet shall have full height boards installed vertically with no end joints in the gypsum installation.

3.3.1 Cementitious Backer Units and Water-Resistant Gypsum Board

Water-resistant gypsum board shall be installed at the locations indicated.

3.3.2 Adhesively-Applied Gypsum Board

Walls scheduled to receive adhesively-applied gypsum board shall be dry, free of dust, oil, or form release agents, protrusions or voids, or foreign matter that would affect a proper bond.

3.4 TRIM, MOLDINGS, AND ACCESSORIES INSTALLATION

Trim, moldings and accessories shall be installed in accordance with GA 216.

3.5 GYPSUM BOARD FINISH

Gypsum board shall be finished in accordance with ASTM C 840, GA 214 and GA 216. Plenum areas above ceilings shall be finished to Level 1 in accordance with GA 214. Water resistant gypsum backing board, ASTM C 630/C 630M, to receive ceramic tile shall be finished to Level 2 in accordance

with GA 214. Walls to receive a heavy-grade wall covering before painting shall be finished to Level 3 in accordance with GA 214. All gypsum board walls, partitions and ceilings shall be finished to Level 5 in accordance with GA 214.

3.6 FIRE-RESISTANT ASSEMBLIES

Gypsum wallboard construction for fire-rated assemblies shall be in accordance with UL Fire Resist Dir, or GA 600 for the design number indicated on drawings.

3.7 SOUND ATTENUATION BLANKETS

Sound attenuation blankets shall be installed per manufacturer recommendation.

3.8 ACOUSTICAL SEALANT

Seal bottom plate of all walls, bottom of gypsum board control joints, door frames, receptacles, fire and valve cabinets and other on concerned joints, in all wall assemblies.

3.9 PATCHING

Surface defects and damage shall be corrected as required to leave gypsum board smooth, uniform in appearance, and ready to receive finish as specified.

-- End of Section --

SECTION 09310

CERAMIC TILE
11/01

PART 1 GENERAL

1.1 REFERENCES

The publications listed below form a part of this specification to the extent referenced. The publications are referred to in the text by basic designation only.

AMERICAN NATIONAL STANDARDS INSTITUTE (ANSI)

ANSI A108.1A	(1992) Installation of Ceramic Tile in the Wet-Set Method, with Portland Cement Mortar
ANSI A108.1B	(1992) Installation of Ceramic Tile on a Cured Portland Cement Mortar Setting Bed with Dry-Set or Latex Portland Cement Mortar
ANSI A108.5	(1992) Installation of Ceramic Tile with Dry-Set Portland Cement Mortar or Latex-Portland Cement Mortar
ANSI A108.6	(1992) Installation of Ceramic Tile with Chemical Resistant, Water Cleanable Tile-Setting and Grouting Epoxy
ANSI A108.8	(1992) Installation of Ceramic Tile with Chemical Resistant Furan Mortar and Grout
ANSI A108.10	(1992) Installation of Grout in Tilework
ANSI A118.1	(1992) Dry-Set Portland Cement Mortar
ANSI A118.3	(1992) Chemical Resistant, Water Cleanable Tile Setting and Grouting Epoxy and Water Cleanable Tile Setting Epoxy Adhesive
ANSI A118.4	(1992) Latex-Portland Cement Mortar
ANSI A118.5	(1992) Chemical Resistant Furan Mortars and Grouts for Tile
ANSI A118.6	(1992) Ceramic Tile Grouts
ANSI A137.1	(1988) Ceramic Tile

AMERICAN SOCIETY FOR TESTING AND MATERIALS (ASTM)

ASTM A 185	(1997) Steel Welded Wire Fabric, Plain, for Concrete Reinforcement
ASTM C 33	(1999ael) Concrete Aggregates

ASTM C 144	(1999) Aggregate for Masonry Mortar
ASTM C 150	(1999a) Portland Cement
ASTM C 206	(1984; R 1997) Finishing Hydrated Lime
ASTM C 207	(1991; R 1997) Hydrated Lime for Masonry Purposes
ASTM C 373	(1988; R 1994) Water Absorption, Bulk Density, Apparent Porosity, and Apparent Specific Gravity of Fired Whiteware Products
ASTM C 648	(1998) Breaking Strength of Ceramic Tile
ASTM C 847	(1995) Metal Lath
ASTM C 1026	(1987; R 1996) Measuring the Resistance of Ceramic Tile to Freeze-Thaw Cycling
ASTM C 1027	(1999) Determining Visible Abrasion Resistance of Glazed Ceramic Tile
ASTM C 1028	(1996) Determining the Static Coefficient of Friction of Ceramic Tile and Other Like Surfaces by the Horizontal Dynamometer Pull-Meter Method

TILE COUNCIL OF AMERICA (TCA)

TCA Hdbk	(1997) Handbook for Ceramic Tile Installation

1.2 SUBMITTALS

Government approval is required for submittals with a "G" designation; submittals not having a "G" designation are for information only. When used, a designation following the "G" designation identifies the office that will review the submittal for the Government. The following shall be submitted in accordance with Section 01330 SUBMITTAL PROCEDURES:

SD-03 Product Data

Tile
Setting-Bed
Mortar, Grout, and Adhesive

Manufacturer's catalog data and preprinted installation and cleaning instructions.

SD-04 Samples

Tile; G
Accessories; G

Samples of sufficient size to show color range, pattern, type and joints.

SD-07 Certificates

Tile
Mortar, Grout, and Adhesive

Certificates indicating conformance with specified requirements. A master grade certificate shall be furnished for tile.

1.3 DELIVERY AND STORAGE

Materials shall be delivered to the project site in manufacturer's original unopened containers with seals unbroken and labels and hallmarks intact. Materials shall be kept dry, protected from weather, and stored under cover in accordance with manufacturer's instructions.

1.4 ENVIRONMENTAL REQUIREMENTS

Ceramic tile work shall not be performed unless the substrate and ambient temperature is at least 50 degrees F and rising. Temperature shall be maintained above 50 degrees F while the work is being performed and for at least 7 days after completion of the work. When temporary heaters are used they shall be vented to the outside to avoid carbon dioxide damage to new tilework.

1.5 WARRANTY

Manufacturer's standard performance guarantees or warranties that extend beyond a 1-year period shall be provided.

PART 2 PRODUCTS

2.1 TILE

Tile shall be standard grade conforming to ANSI A137.1. Containers shall be grade sealed. Seals shall be marked to correspond with the marks on the signed master grade certificate. Tile shall be impact resistant with a minimum breaking strength for wall tile of 90 lbs and 250 lbs for floor tile in accordance with ASTM C 648. Tile for cold climate projects shall be rated frost resistant by the manufacturer as determined by ASTM C 1026. Water absorption shall be in accordance with ASTM C 373. Floor tile shall have a minimum coefficient of friction of 0.70 for textured surface and 1.0 for abrasive surface, wet and dry in accordance with ASTM C 1028. Floor tile shall be Class IV Plus-Extra Heavy Traffic, durability classification as rated by the manufacturer when tested in accordance with ASTM C 1027for abrasion resistance as related to foot traffic.

2.1.1 Quarry Floor Tile

Quarry tile and trim shall be unglazed with smooth surface and abrasive surface. Tile shall be 6 x 6 x 1/2 inch. Reference drawings for color, pattern and surface type.

2.1.2 Glazed Wall Tile

Glazed wall tile and trim shall be cushion edged with matte glaze. Tile shall be 4-1/4 x 4-1/4 inches. Color shall be as shown on drawings.

2.2 SETTING-BED

The setting-bed shall be composed of the following:

2.2.1 Aggregate for Concrete Fill

Aggregate shall conform to ASTM C 33. Maximum size of coarse aggregate shall not be greater than one-half the thickness of concrete fill.

2.2.2 Portland Cement

Cement shall conform to ASTM C 150, Type I, white for wall mortar and gray for other uses.

2.2.3 Sand

Sand shall conform to ASTM C 144.

2.2.4 Hydrated Lime

Hydrated lime shall conform to ASTM C 206, Type S or ASTM C 207, Type S.

2.2.5 Metal Lath

Metal lath shall be flat expanded type conforming to ASTM C 847, and weighing not less than 2.5 pounds per square yard.

2.2.6 Reinforcing Wire Fabric

Wire fabric shall conform to ASTM A 185. Wire shall be either 2 x 2 inch mesh, 16/16 wire or 1-1/2 x 2 inch mesh, 16/13 wire.

2.3 WATER

Water shall be potable.

2.4 MORTAR, GROUT, AND ADHESIVE

Mortar, grout, and adhesive shall conform to the following:

2.4.1 Dry-Set Portland Cement Mortar

ANSI A118.1.

2.4.2 Latex-Portland Cement Mortar

ANSI A118.4.

2.4.3 Ceramic Tile Grout

ANSI A118.6; commercial portland cement grout.

2.4.4 Epoxy Resin Grout

ANSI A118.3.

2.4.5 Furan Resin Grout

ANSI A118.5 and consist of an intimate mixture of furfuryl-alcohol resin with carbon filler and catalyst.

PART 3 EXECUTION

3.1 PREPARATORY WORK AND WORKMANSHIP

Surface to receive tile shall be inspected and shall conform to the requirements of ANSI A108.1A or ANSI A108.1B for surface conditions for the type setting bed specified and for workmanship. Variations of surface to be tiled shall fall within maximum values shown below:

TYPE	WALLS	FLOORS
Dry-Set Mortar	1/8 inch in 8 ft.	1/8 inch in 10 ft.
Organic Adhesives	1/8 inch in 8 ft.	1/16 inch in 3 ft.
Latex portland cement mortar	1/8 inch in 8 ft.	1/8 inch in 10 ft.
Epoxy	1/8 inch in 8 ft.	1/8 inch in 10 ft.

3.2 GENERAL INSTALLATION REQUIREMENTS

Tile work shall not be started until roughing in for mechanical and electrical work has been completed and tested, and built-in items requiring membrane waterproofing have been installed and tested. Floor tile installation shall not be started in spaces requiring wall tile until after wall tile has been installed. Tile in colors and patterns indicated shall be applied in the area shown on the drawings. Tile and accessories shall be installed with the respective surfaces in true even planes to the elevations and grades shown. Special shapes shall be provided as required for sills, jambs, recesses, offsets, external corners, and other conditions to provide a complete and neatly finished installation. Tile bases and coves shall be solidly backed with mortar.

3.3 INSTALLATION OF WALL TILE

Wall tile shall be installed in accordance with the TCA Hdbk, method W243 for dry areas and W244 for Rooms 108, 111, 112, and 113.

3.3.1 Workable or Cured Mortar Bed

Tile shall be installed over a workable mortar bed or a cured mortar bed at the option of the Contractor. A 4 mil polyethylene membrane, metal lath, and scratch coat shall also be installed. Workable mortar bed, materials, and installation of tile shall conform to ANSI A108.1A. Cured mortar bed and materials shall conform to ANSI A108.1B.

3.3.2 Dry-Set Mortar and Latex-Portland Cement Mortar

Dry-set or Latex-portland cement shall be used to install tile in accordance with ANSI A108.5. Latex portland cement shall be used when installing porcelain ceramic tile.

3.3.3 Furan Mortar and Grout

Furan mortar and grout installation shall conform to ANSI A108.8.

3.4 INSTALLATION OF FLOOR TILE

Floor tile shall be installed in accordance with TCA Hdbk, method F114 for recessed floor areas and method F133 for all others.

3.4.1 Workable or Cured Mortar Bed

Floor tile shall be installed over a workable mortar bed or a cured mortar bed at the option of the Contractor. Workable mortar bed materials and installation shall conform to ANSI A108.1A. Cured mortar bed and materials shall conform to ANSI A108.1B. Joints between quarry tile shall be between 1/4 inch in width and shall be uniform in width.

3.4.2 Resinous Grout

When resinous grout is indicated, quarry tile shall be grouted with either furan or epoxy resin grout. Joints shall be raked and cleaned to the full depth of the tile and neutralized when recommended by the resin manufacturer. Epoxy resin grout shall be installed in conformance with ANSI A108.6. Furan resin grout shall be installed in accordance with manufacturer's instructions. Tile installed with furan resin shall be coated with wax by the tile manufacturer. Installation of resin grout shall be in strict accordance with manufacturer's instructions for proportioning, mixing, installing, and curing. Recommended temperature shall be maintained in the area and on the surface to be grouted. After grouting, tile shall be left free of grout stain.

3.4.3 Ceramic Tile Grout

Ceramic Tile grout shall be prepared and installed in accordance with ANSI A108.10.

3.4.4 Waterproofing

Shower pans are specified in Section 15400 PLUMBING, GENERAL PURPOSE. Waterproofing under concrete fill shall conform to the requirements of Section 07132 BITUMINOUS WATERPROOFING.

3.5 INSTALLATION OF MARBLE THRESHOLDS

Thresholds shall be installed where indicated in a manner similar to that of the ceramic tile floor. Thresholds shall be the full width of the opening. Head joints at ends shall not exceed 1/4 inch in width and shall be grouted full as specified for ceramic tile.

3.6 EXPANSION JOINTS

Joints shall be formed as indicated and sealed as specified in Section 07900 JOINT SEALING.

3.6.1 Walls

Expansion joints shall be provided at control joints in backing material. Wherever backing material changes, an expansion joint shall be installed to separate the different materials.

3.6.2 Floors

Expansion joints shall be provided over construction joints, control joints, and expansion joints in concrete slabs. Expansion joints shall extend through setting-beds and fill.

3.7 CLEANING AND PROTECTING

Upon completion, tile surfaces shall be thoroughly cleaned in accordance

with manufacturer's approved cleaning instructions. Acid shall not be used for cleaning glazed tile. Floor tile with resinous grout or with factory mixed grout shall be cleaned in accordance with instructions of the grout manufacturer. After the grout has set, tile wall surfaces shall be given a protective coat of a noncorrosive soap or other approved method of protection. Tiled floor areas shall be covered with building paper before foot traffic is permitted over the finished tile floors. Board walkways shall be laid on tiled floors that are to be continuously used as passageways by workmen. Damaged or defective tiles shall be replaced.

-- End of Section --

SECTION 09510

ACOUSTICAL CEILINGS
10/01

PART 1 GENERAL

1.1 REFERENCES

The publications listed below form a part of this specification to the extent referenced. The publications are referred to in the text by basic designation only.

AMERICAN SOCIETY FOR TESTING AND MATERIALS (ASTM)

ASTM C 635	(2000) Manufacture, Performance, and Testing of Metal Suspension Systems for Acoustical Tile and Lay-In Panel Ceilings
ASTM C 636	(1996) Installation of Metal Ceiling Suspension Systems for Acoustical Tile and Lay-In Panels
ASTM E 580	(2000) Application of Ceiling Suspension Systems for Acoustical Tile and Lay-In Panels in Areas Requiring Moderate Seismic Restraint
ASTM E 1264	(1998) Standard Classification for Acoustical Ceiling Products
ASTM E 1414	(2000) Standard Test for Airborne Sound Attenuation Between Rooms Sharing a Common Ceiling Plenum

U.S. ARMY CORPS OF ENGINEERS (USACE)

TI 809-04	(1998) Seismic Design for Buildings

1.2 SUBMITTALS

Government approval is required for submittals with a "G" designation; submittals not having a "G" designation are for information only. When used, a designation following the "G" designation identifies the office that will review the submittal for the Government. The following shall be submitted in accordance with Section 01330 SUBMITTAL PROCEDURES:

SD-02 Shop Drawings

Approved Detail Drawings; G

Drawings showing suspension system, method of anchoring and fastening, details, and reflected ceiling plan.

SD-03 Product Data

Acoustical Ceiling Systems

Manufacturer's descriptive data, catalog cuts, and installation instructions. Submittals which do not provide adequate data for the product evaluation will be rejected.

SD-04 Samples

Acoustical Units; G

Two samples of each type of acoustical unit and each type of suspension grid tee section showing texture, finish, and color.

SD-07 Certificates

Acoustical Units

Certificate attesting that the mineral based acoustical units furnished for the project contain recycled material and showing an estimated percent of such material.

1.3 GENERAL REQUIREMENTS

Acoustical treatment shall consist of sound controlling units mechanically mounted on a ceiling suspension system. The unit size, texture, finish, and color shall be as specified. The Contractor shall coordinate the whole ceiling system with other details, like the location of access panels and ceiling penetrations, etc., shown on the drawings. The location and extent of acoustical treatment shall be as shown on the approved detail drawings. Reclamation of mineral fiber acoustical ceiling panels to be removed from the job site shall be in accordance with paragraph RECLAMATION PROCEDURES.

1.4 DELIVERY AND STORAGE

Materials shall be delivered to the site in the manufacturer's original unopened containers with brand name and type clearly marked. Materials shall be carefully handled and stored in dry, watertight enclosures. Immediately before installation, acoustical units shall be stored for not less than 24 hours at the same temperature and relative humidity as the space where they will be installed in order to assure proper temperature and moisture acclimation.

1.5 ENVIRONMENTAL REQUIREMENTS

A uniform temperature of not less than 60 degrees F nor more than 85 degrees F and a relative humidity of not more than 70 percent shall be maintained before, during, and after installation of acoustical units.

1.6 SCHEDULING

Interior finish work such as plastering, concrete and terrazzo work shall be complete and dry before installation. Mechanical, electrical, and other work above the ceiling line shall be completed and heating, ventilating, and air conditioning systems shall be installed and operating in order to maintain temperature and humidity requirements.

1.7 WARRANTY

Manufacturer's standard performance guarantees or warranties that extend

beyond a one year period shall be provided for the acoustical ceiling systems. Standard performance guarantee or warranty shall contain an agreement to repair or replace acoustical panels that fail within the warranty period. Failures include, but are not limited to, sagging and warping of panels; rusting and manufacturers defects of grid system.

1.8 EXTRA MATERIALS

Spare tiles of each color shall be furnished at the rate of 5 tiles for each 200 tiles installed. Tiles shall be from the same lot as those installed.

PART 2 PRODUCTS

2.1 ACOUSTICAL UNITS

Contractor shall comply with EPA requirements in accordance with Section 01670 RECYCLED / RECOVERED MATERIALS. Acoustical units shall conform to ASTM E 1264, Class A, and the following requirements:

2.1.1 Units for Exposed-Grid System ATC-1

Type: III (mineral fiber with painted finish). Type III acoustical units shall have a minimum recycled material content of 37 percent.

Minimum NRC: 0.55 when tested on mounting No. E-400

Pattern: D Fine Fissures.

Nominal size: 24 by 24 inches.

Edge detail: Beveled Tegular.

Finish: Factory-applied latex paint.

Minimum LR coefficient: 0.84.

Minimum CAC: 35.

2.1.2 Units for Exposed-Grid System ATC-2

Type: IV (mineral fiber with membrane-faced overlay). Type IV acoustical units shall have a minimum recycled material content of 37 percent.

Minimum NRC: 0.10 when tested on mounting No. E-400

Pattern: E Non Perforated.

Nominal size: 24 by 24 inches.

Edge detail: Square.

Finish: Vinyl face membrane with scrubbable finish.

Minimum LR coefficient: 0.30.

Minimum CAC: 40.

2.2 SUSPENSION SYSTEM

Suspension system shall be exposed-grid standard width flange and shall conform to ASTM C 635 for intermediate-duty systems. Surfaces exposed to view shall be aluminum or steel with a factory-applied white color baked-enamel finish for ATC-1 and aluminum with colored factory-applied vinyl paint finish for ATC-2. Wall molding shall have a flange of not less than 15/16 inch. Mitered corners shall be provided. Suspended ceiling framing system shall have the capability to support the finished ceiling, light fixtures, air diffusers, and accessories, as shown. The suspension system shall have a maximum deflection of 1/360 of span length. Seismic details shall conform to the guidance in TI 809-04 and ASTM E 580 as shown on the drawings.

2.3 HANGERS

Hangers shall be galvanized steel wire. Hangers and attachment shall support a minimum 300 pound ultimate vertical load without failure of supporting material or attachment.

2.4 FINISHES

Acoustical units and suspension system members shall have manufacturer's standard textures, patterns and finishes as specified. Ceiling suspension system components shall be treated to inhibit corrosion.

2.5 CEILING ATTENUATION CLASS AND TEST

Ceiling attenuation class (CAC) range of acoustical units, when required, shall be determined in accordance with ASTM E 1414. Test ceiling shall be continuous at the partition and shall be assembled in the suspension system in the same manner that the ceiling will be installed on the project. System shall be tested with all acoustical units installed.

PART 3 EXECUTION

3.1 INSTALLATION

Acoustical work shall be provided complete with necessary fastenings, clips, and other accessories required for a complete installation. Mechanical fastenings shall not be exposed in the finished work. Hangers shall be laid out for each individual room or space. Hangers shall be placed to support framing around beams, ducts, columns, grilles, and other penetrations through ceilings. Main runners and carrying channels shall be kept clear of abutting walls and partitions. At least two main runners shall be provided for each ceiling span. Wherever required to bypass an object with the hanger wires, a subsuspension system shall be installed, so that all hanger wires will be plumb.

3.1.1 Suspension System

Suspension system shall be installed in accordance with ASTM C 636 and as specified herein. There shall be no hanger wires or other loads suspended from underside of steel decking.

3.1.1.1 Plumb Hangers

Hangers shall be plumb and shall not press against insulation covering ducts and pipes.

3.1.2 Wall Molding

Wall molding shall be provided where ceilings abut vertical surfaces. Wall molding shall be secured not more than 3 inches from ends of each length and not more than 16 inches on centers between end fastenings. Wall molding springs shall be provided at each acoustical unit in semi-exposed or concealed systems.

3.1.3 Acoustical Units

Acoustical units shall be installed in accordance with the approved installation instructions of the manufacturer. Edges of acoustical units shall be in close contact with metal supports, with each other, and in true alignment. Acoustical units shall be arranged so that units less than one-half width are minimized. Units in exposed-grid system shall be held in place with manufacturer's standard hold-down clips, if units weigh less than 1 psf or if required for fire resistance rating.

3.2 CLEANING

Following installation, dirty or discolored surfaces of acoustical units shall be cleaned and left free from defects. Units that are damaged or improperly installed shall be removed and new units provided as directed.

-- End of Section --

SECTION 09650

RESILIENT BASE
07/96

PART 1 GENERAL

1.1 REFERENCES

The publications listed below form a part of this specification to the extent referenced. The publications are referred to in the text by basic designation only.

AMERICAN SOCIETY FOR TESTING AND MATERIALS (ASTM)

ASTM E 648	(1999) Critical Radiant Flux of Floor-Covering Systems Using a Radiant Heat Energy Source
ASTM E 662	(1997) Specific Optical Density of Smoke Generated by Solid Materials

1.2 FIRE RESISTANCE REQUIREMENTS

Flooring in corridors and exits shall have a minimum average critical radiant flux of 0.22 watts per square centimeter when tested in accordance with ASTM E 648. The smoke density rating shall be less than 450 when tested in accordance with ASTM E 662.

1.3 SUBMITTALS

Government approval is required for submittals with a "G" designation; submittals not having a "G" designation are for information only. When used, a designation following the "G" designation identifies the office that will review the submittal for the Government. The following shall be submitted in accordance with Section 01330 SUBMITTAL PROCEDURES:

SD-03 Product Data

Resilient Base and Accessories

Manufacturer's descriptive data and installation instructions including cleaning and maintenance instructions.

SD-04 Samples

Resilient Base; G

Three samples of indicated color.

1.4 DELIVERY AND STORAGE

Materials shall be delivered to the building site in original unopened containers bearing the manufacturer's name, project identification, and handling instructions. Materials shall be stored in a clean dry area with temperature maintained above 70 degrees F for 2 days prior to installation,

and shall be stacked according to manufacturer's recommendations. Materials shall be protected from the direct flow of heat from hot-air registers, radiators and other heating fixtures and appliances.

1.5 ENVIRONMENTAL REQUIREMENTS

Areas to receive resilient flooring shall be maintained at a temperature above 70 degrees F and below 100 degrees F for 2 days before application, during application and 2 days after application. A minimum temperature of 55 degrees F shall be maintained thereafter.

1.6 WARRANTY

Manufacturer's standard performance guarantees or warranties that extend beyond a one year period shall be provided.

1.7 EXTRA MATERIALS

Extra base material composed of 20 linear feet from the same lot as those installed.

PART 2 PRODUCTS

2.1 RESILIENT BASE

Base shall be manufacturers standard rubber (rolled stock), straight style (installed with carpet) coved style (installed with high pressure laminate raised flooring). Base shall be 4 inches high and a minimum 1/8 inch thick. Preformed outside corners shall be furnished.

2.2 ADHESIVE

Adhesive for wall base shall be as recommended by the flooring manufacturer.

2.3 MANUFACTURER'S COLOR

Color as shown on drawings.

PART 3 EXECUTION

3.1 EXAMINATION/VERIFICATION OF CONDITIONS

The Contractor shall examine and verify that site conditions are in agreement with the design package and shall report all conditions that will prevent a proper installation. The Contractor shall not take any corrective action without written permission from the Government.

3.2 SURFACE PREPARATION

Before any work under this section is begun, all defects and uneven surfaces shall have been corrected, and repaired as recommended by the manufacturer.

3.3 INSTALLATION OF RESILIENT BASE

Wall base shall be installed with adhesive in accordance with the manufacturer's written instructions. Base joints shall be tight and base shall be even with adjacent resilient flooring. Voids along the top edge of base at masonry walls shall be filled with caulk.

3.4 PROTECTION

From the time of laying until acceptance, resilient base shall be protected from damage as recommended by the manufacturer.

-- End of Section --

SECTION 09720

WALLCOVERINGS
04/01

PART 1 GENERAL

1.1 REFERENCES

The publications listed below form a part of this specification to the extent referenced. The publications are referred to in the text by basic designation only.

AMERICAN SOCIETY FOR TESTING AND MATERIALS (ASTM)

ASTM E 84	(1999) Surface Burning Characteristics of Building Materials
ASTM F 793	(1993; R 1998) Standard Classification of Wallcovering by Durability Characteristics

1.2 SUBMITTALS

Government approval is required for submittals with a "G" designation; submittals not having a "G" designation are for information only. When used, a designation following the "G" designation identifies the office that will review the submittal for the Government. The following shall be submitted in accordance with Section 01330 SUBMITTAL PROCEDURES:

SD-03 Product Data

Wallcoverings; G
Manufacturer's Instructions

Manufacturer's descriptive data, documentation stating physical characteristics, flame resistance, mildew and germicidal characteristics.

Installation

Preprinted installation instructions for wallcovering and accessories.

Maintenance
Clean-Up

Preprinted cleaning and maintenance instructions for wallcovering and accessories.

SD-04 Samples

Wallcoverings; G

Three samples of each indicated type, pattern, and color of wallcovering. Samples of wall covering shall be minimum 5 x 7 inches and of sufficient size to show pattern repeat.

SD-07 Certificates

Wallcoverings

Manufacturer's statement attesting that the product furnished meets or exceeds specification requirements. The statement must; be dated after the award of the contract, state Contractor's name and address, name the project and location, and list the requirements being certified.

1.3 DELIVERY AND STORAGE

Materials shall be delivered to the site in manufacturers original unopened containers labeled with manufacturers name, pattern, texture, size and related information. Materials shall be stored in accordance with the manufacturer's instructions in a clean dry ventilated area with temperature maintained above 60 degrees F for two days prior to installation.

1.4 ENVIRONMENTAL REQUIREMENTS

Areas to receive wallcovering shall be maintained at a temperature above 60 degrees F for 7 days before, during, and 7 days after application.

1.5 WARRANTY

Manufacturer's standard performance guarantees or warranties that extend beyond a one-year period shall be provided.

1.6 EXTRA MATERIALS

Extra material from the same dye lot consisting of 0.5 yards of full-width wallcovering for each 30 linear yards of wallcovering installed shall be provided for maintenance.

PART 2 PRODUCTS

2.1 WALLCOVERINGS

Wallcoverings shall be material designed specifically for the specified use. The wallcovering shall contain a non-mercury based mildewcide. The wallcovering shall be type made without the use of cadmium based stabilizers. Wallcovering shall have a Class A flame spread rating of 0-25 and smoke development rating of 0-50 when tested in accordance with ASTM E 84.

2.1.1 Vinyl Wallcovering Type A

Vinyl wallcovering shall be a vinyl coated woven or nonwoven fabric with germicidal additives and shall conform to ASTM F 793, Category V Type II, (13.1 to 24 ounces) total weight per square yard and width of 54 inches.

2.2 PRIMER AND ADHESIVE

Primer and adhesive shall be of a type recommended by the wallcovering manufacturer and shall contain a non-mercury based mildewcide. Adhesive shall be strippable type. Adhesive to install cap shall be of a type recommended by the manufacturer of the wainscot cap.

2.3 COLOR, TEXTURE, AND PATTERN

Color, texture, and pattern shall be as shown on drawings.

PART 3 EXECUTION

3.1 EXAMINATION

Contractor shall inspect all areas and conditions under which wallcoverings are to be installed. Contractor shall notify in writing of any conditions detrimental to the proper and timely completion of the installation. Work will proceed only when conditions have been corrected and accepted by the installer.

3.2 SURFACE PREPARATION

Wallcovering shall not be applied to surfaces that are rough, that contain stains that will bleed through the wallcovering, or that are otherwise unsuitable for proper installation. Cracks and holes shall be filled and rough spots shall be sanded smooth. Surfaces to receive wallcovering shall be thoroughly dry. Surface of walls shall be primed as required by manufacturer's instructions to permit ultimate removal of wallcovering from the wall surface. Primer shall be allowed to completely dry before adhesive application.

3.3 INSTALLATION

3.3.1 Vinyl Wallcovering

Wallcovering shall be installed in accordance with the manufacturer's instructions. Glue and adhesive spillage shall be immediately removed from wallcovering face and seams with a remover recommended by the manufacturer. After the installation is complete, the fabric wallcovering shall be vacuumed with a ceiling to floor motion.

3.4 CLEAN-UP

Upon completion of the work, wallcovering shall be left clean and free of dirt or soiling. Surplus materials, rubbish, and debris resulting from the wallcovering installation shall be removed and area shall be left clean.

-- End of Section --

SECTION 09771

FIBERGLASS REINFORCED PLASTIC PANELS (FRP)
04/02

PART 1 GENERAL

1.1 REFERENCES

The publications listed below form a part of this specification to the extent referenced. The publications are referred to within the text by the basic designation only.

AMERICAN SOCIETY FOR TESTING AND MATERIALS (ASTM)

ASTM D 2583	Standard Test Method for Indentation Hardness of Rigid Plastics by Means of a Barcol Impressor
ASTM D 3029	Test Method for Impact Resistance of Flat, Rigid Plastic Specimens by Means of a Tup (Falling Weight)
ASTM E 84	Standard Test Method for Surface Burning Characteristics of Building Material

1.2 SUBMITTALS

Government approval is required for submittals with a "G" designation; submittals not having a "G" designation are for information only or as otherwise designated. When used, a designation following the "G" designation identifies the office that will review the submittal for the Government. The following shall be submitted in accordance with Section 01330 SUBMITTAL PROCEDURES:

SD-02 Shop Drawings

Approved Detail Drawings; G

Submit shop drawings showing layout, profiles, and product components, including anchorage, accessories, finish color, patterns and textures. Indicate location and dimension of joints and fastener attachment.

SD-03 Product Data

Fiberglass Reinforced Plastic (FRP) Panels

Submit product data, including manufacturer's SPEC-DATA product sheet, for specified products.

SD-04 Samples

Fiberglass Reinforced Plastic (FRP) Panels and Accessories; G

Submit selection and verification samples for finish, colors and textures. Submit two samples of each panel, trim and fastener.

1.3 GENERAL REQUIREMENTS

Fiberglass reinforced plastic (FRP) panels, which have been manufactured and installed to maintain performance criteria stated by manufacturer without defects, damage, or failure. All fiberglass reinforced plastic (FRP) panels and moldings from a single manufacturer.

1.4 DELIVERY AND STORAGE

Deliver materials in manufacturer's original, unopened, undamaged containers with identification labels intact. Package sheets on skids or pallets for shipment to project site. Store materials protected from exposure to harmful weather conditions and at temperature and humidity conditions recommended by manufacturer. Store panels indoors in a dry place at the project site

1.5 QUALITY ASSURANCE

Deliver materials in manufacturer's original, unopened, undamaged containers with identification labels intact. Package sheets on skids or pallets for shipment to project site. Store materials protected from exposure to harmful weather conditions and at temperature and humidity conditions recommended by manufacturer. Store panels indoors in a dry place at the project site

1.6 WARRANTY

Manufacturer's standard performance guarantees or warranties that extends beyond one year shall be provided. Standard performance guarantee or warranty shall contain an agreement to repair or replace panel and accessories that fail within the warranty period. Failures include, but not limited to sagging and warping of cracking, staining and discoloration of panels.

1.7 MATERIALS

Package products with protective covering and identify with descriptive labels. Provide and furnish an amount of 10% quantity of panels and accessories amount installed.

PART 2 PRODUCTS

2.1 FIBERGLASS REINFORCED PLASTIC (FRP) PANELS

Fiberglass Reinforced Plastic (FRP) Panels has been designed around Fire-X Glasboard panels manufactured by the Kemlite Company, P.O.Box 2429, Joilet, IL 60434 or equal.

2.2 FRP

a. Panel color and PVC (polyvinyl chloride) moldings shall match color as indicated on the drawings and provide largest panel size to minimize joints.

b. Panel thickness and texture color shall be 0.09" embossed.

c. Underwriters' Laboratories, Inc. (UL) Classified.

d. Class A Flamespread of less than 25, Smoke Developed less than 450

per ASTM E 84.

e. Barcol Hardness (scratch resistance) of 55 as per ASTM D 2583.

f. Panels will exhibit no more than a 0.038 percent weight loss after a 25-cycle Taber Abrasion Test using CS-17 abrasive wheels with 1000 g weight Gardner Impact Strength of 40 in-lb showing no visible damage on front side per ASTM D 3029.

g. FMRC (Factory Mutual Research Center) approved.

h. Panel available. Meets USDA/FSIS Requirements.

i. Complies with ICBO Report Number 4583.

2.3 ACCESSORIES

Provide panel adhesive and moldings as recommended by panel manufacturer.

PART 3 EXECUTION

3.1 MANUFACTURER'S INSTRUCTIONS

Comply with manufacturer's product data, including product technical bulletins, product catalog installation Instructions, and product carton instructions for installation.

3.2 EXAMINATION

Installation shall not begin until building is enclosed, permanent heating and cooling equipment is in operation, and residual moisture from other work has dissipated. During installation, and for not less than 48 hours before, maintain an ambient temperature and relative humidity within limits required by type of adhesive used and recommendation of adhesive manufacturer. Provide ventilation to disperse fumes during application of adhesive as recommended by adhesive manufacturer.

Verify that substrate conditions (which have been previously installed under other sections) are acceptable for product installation in accordance with manufacturer's instructions.

Examine backup surfaces to determine that corners are plumb and straight, surfaces are smooth, uniform, clean, free from foreign matter, nails countersunk, joints and cracks filled flush and smooth with the adjoining surface.

Do not begin installation until backup surfaces are in a satisfactory condition.

3.3 INSTALLATION

Verify actual measurements/openings by field measurements before fabrication and show recorded measurements on shop drawings for approval. Coordinate field measurements and fabrication schedule with construction progress to avoid construction delays.

Cut and drill panels with carbide tipped saw blades or drill bits, or cut with snips. Install panels with manufacturer's recommended gap for panel field and comer joints. Pre-drill fastener holes in panels with

1/8"oversize. For trowel type and application of adhesive, follow adhesive manufacturer's recommendations. Using products acceptable to panel manufacturer, install FRP system in accordance with panel manufacturer's printed instructions and approved detail drawings.

3.4 CLEANING

Remove temporary coverings and protection of adjacent work areas. Repair or replace products that have been installed and are damaged. Clean installed products in accordance with manufacturer's instructions prior to owner's acceptance. Remove construction debris from project site and legally dispose of debris.

Remove any adhesive or excessive sealant from panel face using solvent or cleaner recommended by panel manufacturer.

-- End of Section --

SECTION 09900

PAINTS AND COATINGS
02/02

PART 1 GENERAL

1.1 REFERENCES

The publications listed below form a part of this specification to the extent referenced. The publications are referred to within the text by the basic designation only.

AMERICAN CONFERENCE OF GOVERNMENTAL INDUSTRIAL HYGIENISTS (ACGIH)

ACGIH Limit Values	(1991-1992) Threshold Limit Values (TLVs) for Chemical Substances and Physical Agents and Biological Exposure Indices (BEIs)
ACGIH TLV-DOC	Documentation of Threshold Limit Values and Biological Exposure Indices

AMERICAN SOCIETY FOR TESTING AND MATERIALS (ASTM)

ASTM D 235	Standard Specification for Mineral Spirits (Petroleum Spirits) (Hydrocarbon Dry Cleaning Solvent)
ASTM D 523	(1999) Standard Test Method for Specular Gloss
ASTM D 2092	(1995) Preparation of Zinc-Coated (Galvanized) Steel Surfaces for Painting
ASTM D 4263	(1983; R 1999) Indicating Moisture in Concrete by the Plastic Sheet Method
ASTM D 4444	(1998) Standard Test Methods for Use and Calibration of Hand-Held Moisture Meters
ASTM F 1869	(1998) Measuring Moisture Vapor Emission Rate of Concrete Subfloor Using Anhydrous Calcium Chloride

CODE OF FEDERAL REGULATIONS (CFR)

29 CFR 1910.1000	Air Contaminants

FEDERAL STANDARDS (FED-STD)

FED-STD-313	(Rev. C) Material Safety Data, Transportation Data and Disposal Data for Hazardous Materials Furnished to Government Activities
FED-STD-595	(1989 Rev B) Color

MASTER PAINTERS INSTITUTE (MPI)

MPI 1	(2001) Aluminum Paint
MPI 11	(2001) Exterior Latex, Semi-Gloss
MPI 21	(2001)Heat Resistant Enamel, Gloss, (Up to 205 C or 400 F)
MPI 23	(2001) Surface Tolerant Metal Primer
MPI 26	(2001) Cementitious Galvanized Metal Primer
MPI 50	(2001) Interior Latex Primer Sealer
MPI 56	(2001) Interior Alkyd Dry Fog/Fall
MPI 77	(2001) Epoxy Cold Cured, Gloss
MPI 79	(2001) Marine Alkyd Metal Primer
MPI 90	(2001) Interior Wood Stain, Semi-Transparent
MPI 94	(2001) Exterior Alkyd, Semi-Gloss
MPI 95	(2001) Fast Drying Metal Primer
MPI 107	(2001) Rust Inhibitive Primer (Water-Based)
MPI 141	(2001) High Performance Semigloss Latex, White and Tints - Gloss Level 5

SCIENTIFIC CERTIFICATION SYSTEMS (SCS)

SCS-EPP-SP01-01	(2001) Environmentally Preferable Product Specification for Architectural and Anti-Corrosive Paints

STEEL STRUCTURES PAINTING COUNCIL (SSPC)

SSPC QP 1	(1989) Evaluating Qualifications of Painting Contractors (Field Application to Complex Structures)
SSPC PA 1	(2000) Shop, Field, and Maintenance Painting
SSPC PA 3	(1995) Safety in Paint Application
SSPC VIS 1	(1989) Visual Standard for Abrasive Blast Cleaned Steel (Standard Reference Photographs)
SSPC VIS 3	(1993) Visual Standard for Power- and Hand-Tool Cleaned Steel (Standard Reference Photographs)
SSPC VIS 4	(2001) Guide and Reference Photographs for

	Steel Surfaces Prepared by Waterjetting
SSPC SP 1	(1982) Solvent Cleaning
SSPC SP 2	(1995) Hand Tool Cleaning
SSPC SP 3	(1995) Power Tool Cleaning
SSPC SP 6	(1994) Commercial Blast Cleaning
SSPC SP 7	(1994) Brush-Off Blast Cleaning
SSPC SP 10	(1994) Near-White Blast Cleaning
SSPC SP 12	(1995) Surface Preparation and Cleaning of Steel and Other Hard Materials by High-and Ultra high-Pressure Water Jetting Prior to Recoating

1.2 SUBMITTALS

Submit the following in accordance with Section 01330, "Submittal Procedures."

The current MPI, "Approved Product List" which lists paint by brand, label, product name and product code as of the date of contract award, will be used to determine compliance with the submittal requirements of this specification. The Contractor may choose to use a subsequent MPI "Approved Product List", however, only one list may be used for the entire contract and each coating system is to be from a single manufacturer. All coats on a particular substrate must be from a single manufacturer. No variation from the MPI Approved Products List is acceptable.

Samples of specified materials may be taken and tested for compliance with specification requirements.

In keeping with the intent of Executive Order 13101, "Greening the Government through Waste Prevention, Recycling, and Federal Acquisition", products certified by SCS as meeting SCS-EPP-SP01-01 shall be given preferential consideration over registered products. Products that are registered shall be given preferential consideration over products not carrying any EPP designation.

SD-02 Shop Drawings

Piping identification

Submit color stencil codes

SD-03 Product Data

Coating

Manufacturer's Technical Data Sheets

SD-04 Samples

Color; G

Submit manufacturer's samples of paint colors. Cross reference color samples to color scheme as indicated.

SD-07 Certificates

Applicator's qualifications

Qualification Testing laboratory for coatings

SD-08 Manufacturer's Instructions

Application instructions

Mixing

Detailed mixing instructions, minimum and maximum application temperature and humidity, potlife, and curing and drying times between coats.

Manufacturer's Material Safety Data Sheets

Submit manufacturer's Material Safety Data Sheets for coatings, solvents, and other potentially hazardous materials, as defined in FED-STD-313.

SD-10 Operation and Maintenance Data

Coatings: G

Preprinted cleaning and maintenance instructions for all coating systems shall be provided.

1.3 APPLICATOR'S QUALIFICATIONS

1.3.1 SSPC QP 1 Certification

All contractors and subcontractors that perform surface preparation or coating application shall be certified by the Society for Protective Coatings (formerly Steel Structures Painting Council) (SSPC) to the requirements of SSPC QP 1 prior to contract award, and shall remain certified while accomplishing any surface preparation or coating application. The painting contractors and painting subcontractors must remain so certified for the duration of the project. If a contractor's or subcontractor's certification expires, the firm will not be allowed to perform any work until the certification is reissued. Requests for extension of time for any delay to the completion of the project due to an inactive certification will not be considered and liquidated damages will apply. Notify the Contracting Officer of any change in contractor certification status.

1.4 QUALITY ASSURANCE

1.4.1 Field Samples and Tests

The Contracting Officer may choose up to two coatings that have been delivered to the site to be tested at no cost to the Government. Take samples of each chosen product as specified in the paragraph "Sampling Procedures." Test each chosen product as specified in the paragraph "Testing Procedure." Products which do not conform, shall be removed from the job site and replaced with new products that conform to the referenced specification. Testing of replacement products that failed initial testing

shall be at no cost to the Government.

1.4.1.1 Sampling Procedure

The Contracting Officer will select paint at random from the products that have been delivered to the job site for sample testing. The Contractor shall provide one quart samples of the selected paint materials. The samples shall be taken in the presence of the Contracting Officer, and labeled, identifying each sample. Provide labels in accordance with the paragraph "Packaging, Labeling, and Storage" of this specification.

1.5 REGULATORY REQUIREMENTS

1.5.1 Environmental Protection

In addition to requirements specified elsewhere for environmental protection, provide coating materials that conform to the restrictions of the local Air Pollution Control District and regional jurisdiction. Notify Contracting Officer of any paint specified herein which fails to conform.

1.5.2 Lead Content

Paint shall contain no lead.

1.5.3 Chromate Content

Do not use coatings containing zinc-chromate or strontium-chromate.

1.5.4 Asbestos Content

Materials shall not contain asbestos.

1.5.5 Mercury Content

Materials shall not contain mercury or mercury compounds.

1.5.6 Silica

Abrasive blast media shall not contain free crystilline silica.

1.5.7 Human Carcinogens

Materials shall not contain ACGIH Limit Values and ACGIH TLV-DOC confirmed human carcinogens (A1) or suspected human carcinogens (A2).

1.6 PACKAGING, LABELING, AND STORAGE

Paints shall be in sealed containers that legibly show the contract specification number, designation name, formula or specification number, batch number, color, quantity, date of manufacture, manufacturer's formulation number, manufacturer's directions including any warnings and special precautions, and name and address of manufacturer. Pigmented paints shall be furnished in containers not larger than 5 gallons. Paints and thinners shall be stored in accordance with the manufacturer's written directions, and as a minimum, stored off the ground, under cover, with sufficient ventilation to prevent the buildup of flammable vapors, and at temperatures between 40 to 95 degrees F.

1.7 SAFETY AND HEALTH

Apply coating materials using safety methods and equipment in accordance with the following:

Work shall comply with applicable Federal, State, and local laws and regulations, and with the ACCIDENT PREVENTION PLAN, including the Activity Hazard Analysis as specified in Section 01525,"Safety Requirements" and in Appendix A of EM 385-1-1. The Activity Hazard Analysis shall include analyses of the potential impact of painting operations on painting personnel and on others involved in and adjacent to the work zone.

1.7.1 Safety Methods Used During Coating Application

Comply with the requirements of SSPC PA 3.

1.7.2 Toxic Materials

To protect personnel from overexposure to toxic materials, conform to the most stringent guidance of:

a. The applicable manufacturer's Material Safety Data Sheets (MSDS) or local regulation.

b. 29 CFR 1910.1000.

c. ACGIH Limit Values, threshold limit values.

1.8 ENVIRONMENTAL CONDITIONS

1.8.1 Coatings

Do not apply coating when air or substrate conditions are:

a. Less than 5 degrees F above dew point;

b. Below 50 degrees F or over 95 degrees F, unless specifically pre-approved by the Contracting Officer and the product manufacturer. Under no circumstances shall application conditions exceed manufacturer recommendations.

1.9 COLOR SELECTION

Colors of finish coats shall be as indicated or specified. Where not indicated or specified, colors shall be selected by the Contracting Officer. Manufacturers' names and color identification are used for the purpose of color identification only. Named products are acceptable for use only if they conform to specified requirements. Products of other manufacturers are acceptable if the colors approximate colors indicated and the product conforms to specified requirements.

Tint each coat progressively darker to enable confirmation of the number of coats.

1.10 LOCATION AND SURFACE TYPE TO BE PAINTED

1.10.1 Painting Included

Where a space or surface is indicated to be painted, include the following

unless indicated otherwise.

a. Surfaces behind portable objects and surface mounted articles readily detachable by removal of fasteners, such as screws and bolts.

b. New factory finished surfaces that require identification or color coding and factory finished surfaces that are damaged during performance of the work.

c. Existing coated surfaces that are damaged during performance of the work.

1.10.1.1 Exterior Painting

Includes new surfaces, existing coated surfaces, and existing uncoated surfaces, of the building and appurtenances as indicated. Also included are existing coated surfaces made bare by cleaning operations.

1.10.1.2 Interior Painting

Includes new surfaces and appurtenances as indicated. Where a space or surface is indicated to be painted, include the following items, unless indicated otherwise.

a. Exposed columns, girders, beams, joists, and metal deck; and

b. Other contiguous surfaces.

1.10.2 Painting Excluded

Do not paint the following unless indicated otherwise.

a. Surfaces concealed and made inaccessible by panelboards, fixed ductwork, machinery, and equipment fixed in place.

b. Surfaces in concealed spaces. Concealed spaces are defined as enclosed spaces above suspended ceilings, furred spaces, and chases.

c. Steel to be embedded in concrete.

d. Copper, stainless steel, aluminum, brass, and lead except existing coated surfaces.

e. Hardware, fittings, and other factory finished items.

1.10.3 Mechanical and Electrical Painting

Includes field coating of interior and exterior new surfaces.

a. Where a space or surface is indicated to be painted, include the following items unless indicated otherwise.

(1) Exposed piping, conduit, and ductwork;

(2) Supports, hangers, air grilles, and registers;

(3) Miscellaneous metalwork and insulation coverings.

1.10.3.1 Fire Extinguishing Sprinkler Systems

Clean, pretreat, prime, and paint new fire extinguishing sprinkler systems including valves, piping, conduit, hangers, supports, miscellaneous metalwork, and accessories as indicated on the drawings. Apply coatings to clean, dry surfaces, using clean brushes. Clean the surfaces to remove dust, dirt, rust, and loose mill scale. Immediately after cleaning, provide the metal surfaces with one coat primer per schedules. Shield sprinkler heads with protective covering while painting is in progress. Upon completion of painting, remove protective covering from sprinkler heads. Remove sprinkler heads which have been painted and replace with new sprinkler heads.

1.10.4 Definitions and Abbreviations

1.10.4.1 Qualification Testing

Qualification testing is the performance of all test requirements listed in the product specification. This testing is accomplished by MPI to qualify each product for the MPI Approved Product List, and may also be accomplished by Contractor's third party testing lab if an alternative to Batch Quality Conformance Testing by MPI is desired.

1.10.4.2 Batch Quality Conformance Testing

Batch quality conformance testing determines that the product provided is the same as the product qualified to the appropriate product specification. This testing shall only be accomplished by MPI testing lab.

1.10.4.3 Coating

A film or thin layer applied to a base material called a substrate. A coating may be a metal, alloy, paint, or solid/liquid suspensions on various substrates (metals, plastics, wood, paper, leather, cloth, etc.). They may be applied by electrolysis, vapor deposition, vacuum, or mechanical means such as brushing, spraying, calendering, and roller coating. A coating may be applied for aesthetic or protective purposes or both. The term "coating" as used herein includes emulsions, enamels, stains, varnishes, sealers, epoxies, and other coatings, whether used as primer, intermediate, or finish coat. The terms paint and coating are used interchangeably.

1.10.4.4 DFT or dft

Dry film thickness, the film thickness of the fully cured, dry paint or coating.

1.10.4.5 DSD

Degree of Surface Degradation, the MPI system of defining degree of surface degradation. Five (5) levels are generically defined under the Assessment sections in the MPI Maintenance Repainting Manual.

1.10.4.6 EPP

Environmentally Preferred Products, a standard for determining environmental preferability in support of Executive Order 13101.

1.10.4.7 EXT

MPI short term designation for an exterior coating system.

1.10.4.8 INT

MPI short term designation for an interior coating system.

1.10.4.9 mil / mils

The English measurement for 0.001 in or one/one-thousandth of an inch.

1.10.4.10 MPI Gloss Levels

MPI system of defining gloss. Seven (7) gloss levels (G1 to G7) are generically defined under the Evaluation sections of the MPI Manuals. Traditionally, Flat refers to G1/G2, Eggshell refers to G3, Semigloss refers to G5, and Gloss refers to G6.

Gloss levels are defined by MPI as follows:

Gloss Level	Description	Units @ 60 degrees	Units @ 85 degrees
G1	Matte or Flat	0 to 5	10 max
G2	Velvet	0 to 10	10 to 35
G3	Eggshell	10 to 25	10 to 35
G4	Satin	20 to 35	35 min
G5	Semi-Gloss	35 to 70	
G6	Gloss	70 to 85	
G7	High Gloss		

Gloss is tested in accordance with ASTM D 523. Historically, the Government has used Flat (G1 / G2), Eggshell (G3), Semi-Gloss (G5), and Gloss (G6).

1.10.4.11 MPI System Number

The MPI coating system number in each Division found in either the MPI Architectural Painting Specification Manual or the Maintenance Repainting Manual and defined as an exterior (EXT/REX) or interior system (INT/RIN). The Division number follows the CSI Master Format.

1.10.4.12 Paint

See Coating definition.

1.10.4.13 REX

MPI short term designation for an exterior coating system used in repainting projects or over existing coating systems.

1.10.4.14 RIN

MPI short term designation for an interior coating system used in repainting projects or over existing coating systems.

PART 2 PRODUCTS

2.1 MATERIALS

Conform to the coating specifications and standards referenced in PART 3. Submit manufacturer's technical data sheets for specified coatings and solvents.

PART 3 EXECUTION

3.1 PROTECTION OF AREAS AND SPACES NOT TO BE PAINTED

Prior to surface preparation and coating applications, remove, mask, or otherwise protect, hardware, hardware accessories, machined surfaces, radiator covers, plates, lighting fixtures, public and private property, and other such items not to be coated that are in contact with surfaces to be coated. Following completion of painting, workmen skilled in the trades involved shall reinstall removed items. Restore surfaces contaminated by coating materials, to original condition and repair damaged items.

3.2 SURFACE PREPARATION

Remove dirt, splinters, loose particles, grease, oil, and other foreign matter and substances deleterious to coating performance as specified for each substrate before application of paint or surface treatments. Oil and grease shall be removed prior to mechanical cleaning. Cleaning shall be programmed so that dust and other contaminants will not fall on wet, newly painted surfaces. Exposed ferrous metals such as nail heads on or in contact with surfaces to be painted with water-thinned paints, shall be spot-primmed with a suitable corrosion-inhibitive primer capable of preventing flash rusting and compatible with the coating specified for the adjacent areas.

3.3 PREPARATION OF METAL SURFACES

3.3.1 Ferrous Surfaces

a. Ferrous Surfaces including Shop-coated Surfaces and Small Areas That Contain Rust, Mill Scale and Other Foreign Substances: Solvent clean or detergent wash in accordance with SSPC SP 1 to remove oil and grease. Where shop coat is missing or damaged, clean according to SSPC SP 6, or SSPC SP 10. Brush-off blast remaining surface in accordance with SSPC SP 7. Shop-coated ferrous surfaces shall be protected from corrosion by treating and touching up corroded areas immediately upon detection.

3.3.2 Final Ferrous Surface Condition:

For tool cleaned surfaces, the requirements are stated in SSPC SP 2 and SSPC SP 3. As a visual reference, cleaned surfaces shall be similar to photographs in SSPC VIS 3.

For abrasive blast cleaned surfaces, the requirements are stated in SSPC SP 7, SSPC SP 6, and SSPC SP 10. As a visual reference, cleaned surfaces shall be similar to photographs in SSPC VIS 1.

For waterjet cleaned surfaces, the requirements are stated in SSPC SP 12. As a visual reference, cleaned surfaces shall be similar to photographs in SSPC VIS 4.

3.3.3 Galvanized Surfaces

a. New or Existing Galvanized Surfaces With Only Dirt and Zinc Oxidation Products: Clean with solvent, steam, or non-alkaline detergent solution in accordance with SSPC SP 1. If the galvanized metal has been passivated or stabilized, the coating shall be completely removed by brush-off abrasive blast. New galvanized steel to be coated shall not be "passivated" or "stabilized" If the absence of hexavalent stain inhibitors is not documented, test as described in ASTM D 2092, Appendix X2, and remove by one of the methods described therein.

b. Galvanized with Slight Coating Deterioration or with Little or No Rusting: Water jetting to SSPC SP 12 WJ3 to remove loose coating from surfaces with less than 20 percent coating deterioration and no blistering, peeling, or cracking. Use inhibitor as recommended by the coating manufacturer to prevent rusting.

3.3.4 Non-Ferrous Metallic Surfaces

Aluminum and aluminum-alloy, lead, copper, and other nonferrous metal surfaces.

a. Surface Cleaning: Solvent clean in accordance with SSPC SP 1 and wash with mild non-alkaline detergent to remove dirt and water soluble contaminants.

3.3.5 Terne-Coated Metal Surfaces

Solvent clean surfaces with mineral spirits, ASTM D 235. Wipe dry with clean, dry cloths.

3.4 PREPARATION OF CONCRETE

3.4.1 Concrete

a. Curing: Concrete surfaces shall be allowed to cure at least 30 days before painting, except concrete slab on grade, which shall be allowed to cure 90 days before painting.

b. Surface Cleaning: Remove the following deleterious substances.

(1) Dirt, Chalking, Grease, and Oil: Wash new surfaces with a solution composed of 1/2 cup trisodium phosphate, 1/4 cuphousehold detergent, and 4 quarts of warm water. Then rinse thoroughly with fresh water. For large areas, water blasting may be used.

(2) Fungus and Mold: Wash surfaces with a solution composed of 1/2 cup trisodium phosphate, 1/4 cup household detergent, 1 quart 5 percent sodium hypochlorite solution and 3 quarts of warm water. Rinse thoroughly with fresh water.

(3) Paint and Loose Particles: Remove by wire brushing.

(4) Efflorescence: Remove by scraping or wire brushing followed by washing with a 5 to 10 percent by weight aqueous solution of hydrochloric (muriatic) acid. Do not allow acid to remain on the surface for more than five minutes before rinsing with fresh water. Do not acid clean more than 4 square feet of surface, per workman, at one time.

c. Cosmetic Repair of Minor Defects: Repair or fill minor defects including, but not limited to, spalls, in accordance with manufacturer's recommendations and prior to coating application.

d. Allowable Moisture Content: Latex coatings may be applied to damp surfaces, but not to surfaces with droplets of water. Do not apply epoxies to damp vertical surfaces as determined by ASTM D 4263 or horizontal surfaces that exceed 3 lbs of moisture per 1000 square feet in 24 hours as determined by ASTM F 1869. In all cases follow manufacturers recommendations. Allow surfaces to cure a minimum of 30 days before painting.

3.4.2 Gypsum Board

a. Surface Cleaning: Gypsum board shall be dry. Remove loose dirt and dust by brushing with a soft brush, rubbing with a dry cloth, or vacuum-cleaning prior to application of the first coat material. A damp cloth or sponge may be used if paint will be water-based.

b. Repair of Minor Defects: Prior to painting, repair joints, cracks, holes, surface irregularities, and other minor defects with patching plaster or spackling compound and sand smooth.

c. Allowable Moisture Content: Latex coatings may be applied to damp surfaces, but not surfaces with droplets of water. Do not apply epoxies to damp surfaces as determined by ASTM D 4263. New plaster to be coated shall have a maximum moisture content of 8 percent, when measured in accordance with ASTM D 4444, Method A, unless otherwise authorized. In addition to moisture content requirements, allow new plaster to age a minimum of 30 days before preparation for painting.

3.5 PREPARATION OF WOOD SURFACES

3.5.1 New Wood Surfaces:

a. Wood surfaces shall be cleaned of foreign matter.

Surface Cleaning: Surfaces shall be free from dust and other deleterious substances and in a condition approved by the Contracting Officer prior to receiving finish. Do not use water to clean uncoated wood.

b. Moisture content of the wood shall not exceed 12 percent as measured by a moisture meter in accordance with ASTM D 4444, Method A, unless otherwise authorized.

c. Wood surfaces adjacent to surfaces to receive water-thinned paints shall be primed and/or touched up before applying water-thinned paints.

d. Cracks and Nailheads: Set and putty stop nailheads and putty cracks after the prime coat has dried.

e. Cosmetic Repair of Minor Defects:

(1) Knots: Prior to application of coating, cover knots and

stains with two or more coats of 3-pound-cut shellac varnish, plasticized with 5 ounces of castor oil per gallon. Scrape away existing coatings from knotty areas, and sand before treating. Prime before applying any putty over shellacked area.

(2) Open Joints and Other Openings: Fill with whiting putty, linseed oil putty. Sand smooth after putty has dried.

(3) Checking: Where checking of the wood is present, sand the surface, wipe and apply a coat of pigmented orange shellac. Allow to dry before paint is applied.

3.5.2 Interior Wood Surfaces, Stain Finish

Interior wood surfaces to receive stain shall be sanded. Oak and other open-grain wood to receive stain shall be given a coat of wood filler not less than 8 hours before the application of stain; excess filler shall be removed and the surface sanded smooth.

3.6 APPLICATION

3.6.1 Coating Application

Painting practices shall comply with applicable federal, state and local laws enacted to insure compliance with Federal Clean Air Standards and manufacturer's application instructions. Apply coating materials in accordance with SSPC PA 1. SSPC PA 1 methods are applicable to all substrates, except as modified herein.

At the time of application, paint shall show no signs of deterioration. Uniform suspension of pigments shall be maintained during application.

Unless otherwise specified or recommended by the paint manufacturer, paint may be applied by brush, roller, or spray. Rollers for applying paints and enamels shall be of a type designed for the coating to be applied and the surface to be coated.

Paints, except water-thinned types, shall be applied only to surfaces that are completely free of moisture as determined by sight or touch.

Thoroughly work coating materials into joints, crevices, and open spaces. Special attention shall be given to insure that all edges, corners, crevices, welds, and rivets receive a film thickness equal to that of adjacent painted surfaces.

Each coat of paint shall be applied so dry film shall be of uniform thickness and free from runs, drops, ridges, waves, pinholes or other voids, laps, brush marks, and variations in color, texture, and finish. Hiding shall be complete.

Touch up damaged coatings before applying subsequent coats. Interior areas shall be broom clean and dust free before and during the application of coating material.

Where indicated, apply paint to new fire extinguishing sprinkler systems including valves, piping, conduit, hangers, supports, miscellaneous metal work, and accessories. Shield sprinkler heads with protective coverings while painting is in progress. Remove sprinkler heads which have been painted and replace with new sprinkler heads. For piping, provide prime

surfaces with two coats of paint to match adjacent surfaces, except provide valves and operating accessories with one coat of red alkyd gloss enamel. Upon completion of painting, remove protective covering from sprinkler heads.

a. Drying Time: Allow time between coats, as recommended by the coating manufacturer, to permit thorough drying, but not to present topcoat adhesion problems. Provide each coat in specified condition to receive next coat.

b. Primers, and Intermediate Coats: Do not allow primers or intermediate coats to dry more than 30 days, or longer than recommended by manufacturer, before applying subsequent coats. Follow manufacturer's recommendations for surface preparation if primers or intermediate coats are allowed to dry longer than recommended by manufacturers of subsequent coatings. Each coat shall cover surface of preceding coat or surface completely, and there shall be a visually perceptible difference in shades of successive coats.

c. Finished Surfaces: Provide finished surfaces free from runs, drops, ridges, waves, laps, brush marks, and variations in colors.

3.6.2 Mixing and Thinning of Paints

Reduce paints to proper consistency by adding fresh paint, except when thinning is mandatory to suit surface, temperature, weather conditions, application methods, or for the type of paint being used. Obtain written permission from the Contracting Officer to use thinners. The written permission shall include quantities and types of thinners to use.

When thinning is allowed, paints shall be thinned immediately prior to application with not more than 1 pint of suitable thinner per gallon. The use of thinner shall not relieve the Contractor from obtaining complete hiding, full film thickness, or required gloss. Thinning shall not cause the paint to exceed limits on volatile organic compounds. Paints of different manufacturers shall not be mixed.

3.6.3 Two-Component Systems

Two-component systems shall be mixed in accordance with manufacturer's instructions. Any thinning of the first coat to ensure proper penetration and sealing shall be as recommended by the manufacturer for each type of substrate.

3.6.4 Coating Systems

a. Systems by Substrates: Apply coatings that conform to the respective specifications listed in the following Tables:

Table

Division 5. Exterior Metal, Ferrous and Non-Ferrous Paint Table
Division 3. Interior Concrete Paint Table
Division 5. Interior Metal, Ferrous and Non-Ferrous Paint Table
Division 6. Interior Wood Paint Table
Division 9: Interior Gypsum Board Paint Table

b. Minimum Dry Film Thickness (DFT): Apply paints, primers,

varnishes, enamels, undercoats, and other coatings to a minimum dry film thickness of 1.5 mil each coat unless specified otherwise in the Tables. Coating thickness where specified, refers to the minimum dry film thickness.

c. Coatings for Surfaces Not Specified Otherwise: Coat surfaces which have not been specified, the same as surfaces having similar conditions of exposure.

d. Existing Surfaces Damaged During Performance of the Work, Including New Patches In Existing Surfaces: Coat surfaces with the following:

(1) One coat of primer.

(2) One coat of undercoat or intermediate coat.

(3) One topcoat to match adjacent surfaces.

e. Existing Coated Surfaces To Be Painted: Apply coatings conforming to the respective specifications listed in the Tables herein, except that pretreatments, sealers and fillers need not be provided on surfaces where existing coatings are soundly adhered and in good condition. Do not omit undercoats or primers.

3.7 COATING SYSTEMS FOR METAL

Apply coatings of Tables in Division 5 for Exterior and Interior.

a. Apply specified ferrous metal primer on the same day that surface is cleaned, to surfaces that meet all specified surface preparation requirements at time of application.

b. Inaccessible Surfaces: Prior to erection, use one coat of specified primer on metal surfaces that will be inaccessible after erection.

c. Shop-primed Surfaces: Touch up exposed substrates and damaged coatings to protect from rusting prior to applying field primer.

d. Surface Previously Coated with Epoxy or Urethane: Apply MPI 101, 1.5 mils DFT immediately prior to application of epoxy or urethane coatings.

e. Pipes and Tubing: The semitransparent film applied to some pipes and tubing at the mill is not to be considered a shop coat, but shall be overcoated with the specified ferrous-metal primer prior to application of finish coats.

f. Exposed Nails, Screws, Fasteners, and Miscellaneous Ferrous Surfaces. On surfaces to be coated with water thinned coatings, spot prime exposed nails and other ferrous metal with latex primer MPI 107.

3.8 PIPE COLOR CODE MARKING

Pipes in exposed areas and in accessible pipe spaces shall be provided with color band and titles adjacent to all valves, except those provided at plumbing fixtures, at not more than 40 foot spacing on straight pipe runs,

adjacent to change in direction, and on both sides where pipes pass through walls or floors. Color code marking for piping identification shall be of the color listed in TABLE I and the size listed in TABLE II. The arrows shall be installed adjacent to each band to indicate the direction of flow in the pipe. The legends shall be printed in upper-case black letters as listed in TABLE I. Letter sizes shall be as listed in TABLE II. Marking shall be painted using stencil or applied using colored, pressure-sensitive adhesive markers of standard manufacture. Paint shall be as specified for insulated and uninsulated piping.

TABLE I. COLOR CODES FOR MARKING PIPE

Material	Band	Letters and Arrow*	Legend
Cold water (potable)	Green	White	POTABLE WATER
Hood Fire Suppression	Red	White	F.P. FOAM CONC
Fire Sprinkler Water	Red	White	FIRE SPR. WATER
Hot water (domestic)	Green	White	H.W.
Hot water recirculating (domestic)	Green	White	H.W.R.
Natural gas	Yellow	Black	NAT. GAS
Refrigerants	Blue	White	REFRIGERANT

TABLE II. COLOR CODE MARKING SIZES

Outside Diameter of Pipe Covering (Inches)	Length of Color Band (inches)	Arrow Length x Width (Inches)	Size of Legend Letters and Numerals (Inches)
Less than 1-1/2	8	8 x 2-1/4	1/2
1-1/2 to 2-3/8	8	8 x 2-1/4	3/4
2-1/2 to 7-7/8	12	8 x 2-1/4	1-1/4
8 to 10	24	12 x 4-1/2	2-1/2
Over 10	32	12 x 4-1/2	3-1/2

3.9 MISCELLANEOUS PAINTING

3.9.1 Lettering

Lettering shall be provided as scheduled on the drawings, shall be Gothic type, and shall be water-type decalcomania, finished with a protective coating of spar varnish. Samples shall be approved before application.

3.10 SURFACES TO BE PAINTED

Surfaces listed in the painting schedules at the end of this section, other than those listed in paragraph SURFACES NOT TO BE PAINTED, shall be painted as scheduled.

3.11 SURFACES NOT TO BE PAINTED

Surfaces of hardware, fittings, and other factory finished items shall not be painted unless noted otherwise. Piping that is insulated shall not be painted.

3.12 INSPECTION AND ACCEPTANCE

In addition to meeting previously specified requirements, demonstrate mobility of moving components for inspection by the Contracting Officer.

Perform this demonstration after appropriate curing and drying times of coatings have elapsed and prior to invoicing for final payment.

3.13 PAINT TABLES

All DFT's are minimum values.

3.13.1 EXTERIOR PAINT TABLES

DIVISION 5: EXTERIOR METAL, FERROUS AND NON-FERROUS PAINT TABLE

STEEL / FERROUS SURFACES

A. New Steel that has been hand or power tool cleaned to SSPC SP 2 or SSPC SP 3

1. Alkyd
New; MPI EXT 5.1Q-G5 (Semigloss) Existing; MPI REX 5.1D-G5

Primer:	Intermediate:	Topcoat:
MPI 23	MPI 94	MPI 94

System DFT: 5.25 mils

B. New Steel that has been blast-cleaned to SSPC SP 6:

2. Alkyd
New; MPI EXT 5.1D-G5 (Semigloss) / Existing; MPI REX 5.1D-G5

Primer:	Intermediate:	Topcoat:
MPI 79	MPI 94	MPI 94

System DFT: 5.25 mils

EXTERIOR GALVANIZED SURFACES

F. New Galvanized surfaces:

MPI EXT 5.3A-G5 (Semigloss)

Primer:	Intermediate:	Topcoat:
MPI 26	MPI 11	MPI 11

System DFT: 4.5 mils

EXTERIOR SURFACES, OTHER METALS (NON-FERROUS)

I. Aluminum, aluminum alloy and other miscellaneous non-ferrous metal items not otherwise specified except hot metal surfaces, roof surfaces, and new prefinished equipment. Match surrounding finish:

1. Alkyd

MPI EXT 5.4F-G5 (Semigloss)

Primer:	Intermediate:	Topcoat:
MPI 95	MPI 94	MPI 94

System DFT: 5 mils

J. Surfaces adjacent to painted surfaces; Mechanical, Electrical, Fire extinguishing sprinkler systems including valves, conduit, hangers, supports, and miscellaneous metal items not otherwise specified except floors, hot metal surfaces, and new prefinished equipment. Match surrounding finish:

1. Alkyd

EXTERIOR SURFACES, OTHER METALS (NON-FERROUS)

MPI EXT 5.1D-G5 (Semigloss)

Primer:	Intermediate:	Topcoat:
MPI 79	MPI 94	MPI 94

System DFT: 5.25 mils

3.13.2 INTERIOR PAINT TABLES

DIVISION 5: INTERIOR METAL, FERROUS AND NON-FERROUS PAINT TABLE

INTERIOR STEEL / FERROUS SURFACES

A. Metal, Mechanical, Electrical, Fire extinguishing sprinkler systems including valves, conduit, hangers, supports, and miscellaneous metal items not otherwise specified as indicated:

1. High Performance Architectural Latex
MPI INT 5.1R-G5 (Semigloss)

Primer:	Intermediate:	Topcoat:
MPI 79	MPI 141	MPI 141

System DFT: 5 mils

B. Ferrous metal in concealed damp spaces or in exposed areas having unpainted adjacent surfaces as follows:

1. Aluminum Paint
MPI INT 5.1M

Primer:	Intermediate:	Topcoat:
MPI 79	MPI 1	MPI 1

System DFT: 4.25 mils

C. Miscellaneous non-ferrous metal items not otherwise specified except hot metal surfaces, and new prefinished equipment. Match surrounding finish:

1. High Performance Architectural Latex
MPI INT 5.4F-G5 (Semigloss)

Primer:	Intermediate:	Topcoat:
MPI 95	MPI 141	MPI 141

System DFT: 5 mils

D. Hot metal surfaces subject to temperatures up to 400 degrees F:

1. Heat Resistant Enamel
MPI INT 5.2A

Primer:	Intermediate:	Topcoat:
MPI 21	Surface preparation and number of coats per manufacturer's instructions.	

System DFT: Per Manufacturer

E. New Wood Trim; Stained:

1. Stained, oil-modified polyurethane

New; MPI INT 6.3E-G6 (Gloss) / Existing; MPI RIN 6.3E-G6 (Gloss)

Stain:	Primer:	Intermediate:	Topcoat:
MPI 90	MPI 56	MPI 56	MPI 56

System DFT: 4 mils

Note: Sand between all coats per manufacturers recommendations.

DIVISION 9: INTERIOR GYPSUM BOARD PAINT TABLE

A. New Wallboard as indicated on drawings:

1. High Performance Architectural Latex
New; MPI INT 9.2B-G5 (Semigloss)

Primer:	Intermediate:	Topcoat:
MPI 50	MPI 141	MPI 141

System DFT: 4 mils

2. Epoxy
New; MPI INT 9.2E-G6 (Gloss)

Primer:	Intermediate:	Topcoat:
MPI 50	MPI 77	MPI 77

System DFT: 4 mils

-- End of Section --

SECTION 10160

TOILET PARTITIONS
07/98

PART 1 GENERAL

1.1 REFERENCES

The publications listed below form a part of this specification to the extent referenced. The publications are referred to in the text by basic designation only.

COMMERCIAL ITEM DESCRIPTIONS (CID)

CID A-A-60003 Partitions, Toilet, Complete

1.2 SUBMITTALS

Government approval is required for submittals with a "G" designation; submittals not having a "G" designation are for information only. When used, a designation following the "G" designation identifies the office that will review the submittal for the Government. The following shall be submitted in accordance with Section 01330 SUBMITTAL PROCEDURES:

SD-02 Shop Drawings

Approved Detail Drawings; G

Drawings showing plans, elevations, details of construction, hardware, reinforcing, fittings, mountings, and anchorings.

SD-03 Product Data

Toilet Partition System; G

Manufacturer's technical data and catalog cuts including installation and cleaning instructions.

SD-04 Samples

Toilet Partition System; G

Manufacturer's standard color charts and color samples.

1.3 SYSTEM DESCRIPTION

Toilet partition system, including toilet enclosures, room entrance screens, and urinal screens, shall be a complete and usable system of panels, hardware, and support components. The partition system shall be provided by a single manufacturer and shall be a standard product as shown in the most recent catalog data. The partition system shall be as shown on the approved detail drawings.

1.4 DELIVERY, STORAGE, AND HANDLING

Components shall be delivered to the jobsite in the manufacturer's original packaging with the brand, item identification, and project reference clearly marked. Components shall be stored in a dry location that is adequately ventilated; free from dust, water, or other contaminants; and shall have easy access for inspection and handling.

1.5 WARRANTY

Manufacturer's standard performance guarantees or warranties that extend beyond a 1 year period shall be provided.

PART 2 PRODUCTS

2.1 TOILET ENCLOSURES

Toilet enclosures shall conform to CID A-A-60003, Type I, Style C, overhead braced. Width, length, and height of toilet enclosures shall be as shown. Finish surface of panels shall be painted metal, Finish 1. Panels indicated to receive toilet paper holders or grab bars as specified in Section 10800 TOILET ACCESSORIES, shall be prepared for mounting of the items required. Grab bars shall withstand a bending stress, shear stress, shear force, and a tensile force induced by 250 lbf. Grab bars shall not rotate within their fittings.

2.2 HARDWARE

Hardware for the toilet partition system shall conform to CID A-A-60003 for the specified type and style of partitions. Hardware finish shall be highly resistant to alkalies, urine, and other common toilet room acids.

2.3 COLORS

Color of finishes for toilet partition system components shall be manufacturer's standard as shown on drawings.

PART 3 EXECUTION

3.1 INSTALLATION

Toilet partitions shall be installed straight and plumb in accordance with approved manufacturer's instructions with horizontal lines level and rigidly anchored to the supporting construction. Drilling and cutting for installation of anchors shall be at locations that will be concealed in the finished work.

3.2 ADJUSTING AND CLEANING

Doors shall have a uniform vertical edge clearance of approximately 3/16 inch and shall rest open at approximately 30 degrees when unlatched. Baked enamel finish shall be touched up with the same color of paint that was used for the finish. Toilet partitions shall be cleaned in accordance with approved manufacturer's instructions and shall be protected from damage until accepted.

-- End of Section --

SECTION 10200

ARCHITECTURAL LOUVERS
5/01

PART 1 GENERAL

1.1 REFERENCES

The publications listed below form a part of this specification to the extent referenced. The publications are referred to in the text by basic designation only.

AIR MOVEMENT AND CONTROL ASSOCIATION (AMCA)

AMCA 500	Test Methods for Louvers, Dampers

AMERICAN ARCHITECTURAL MANUFACTURERS ASSOCIATION (AAMA)

AAMA 606.1	Voluntary Guide Specification and Inspection Methods for Integral Color Anodic Finishes for Architectural Aluminum
AAMA 608.1	Voluntary Guide Specification and Inspection Methods for Electrolytically Deposited Color Anodic Finishes for Architectural Aluminum

AMERICAN SOCIETY FOR TESTING AND MATERIALS (ASTM)

ASTM C 578	Preformed, Cellular Polystyrene Thermal Insulation
ASTM C 612	Mineral Fiber Block Thermal Insulation

1.2 GENERAL REQUIREMENTS

This Section includes exterior fixed metal wall louvers and blank-off panels for wall louvers located in the masonry wall, metal wall panels and hollow metal door frames above doors. The following Sections contain requirements that relate to this Section.

a. For sealants installed in perimeter joints between louver frames and adjoining construction: SECTION 07900.

b. For field painting louvers: SECTION 09900.

c. For ductwork connected to metal wall louvers: DIVISION 15.

d. For electric and electronic control of motor-operated adjustable metal wall louvers: DIVISION 15.

e. For pneumatic control of motor-operated adjustable metal wall louvers: DIVISION 15.

1.3 SUBMITTALS

Government approval is required for submittals with a "G" designation;

submittals not having a "G" designation are for information only. When used, a designation following the "G" designation identifies the office that will review the submittal for the Government. The following shall be submitted in accordance with Section 01330 SUBMITTAL PROCEDURES:

SD-03 Product Data

Louvers and Frames

SD-02 Shop Drawings G

Shop Drawings of Louver Units and Accessories. Include plans, elevations, sections, and details showing profiles, angles, and spacing of louver blades; unit dimensions related to wall openings and construction; free areas for each size indicated; profiles of frames at jambs, heads, and sills; and anchorage details and locations.

1.4 PERFORMANCE REQUIREMENTS

Structural Performance: Engineer, fabricate, and install exterior metal wall louvers to withstand the effects of loads and stresses from wind and normal thermal movement without evidencing permanent deformation of louver components including blades, frames, and supports; noise or metal fatigue caused by louver blade rattle or flutter; or permanent damage to fasteners and anchors.

1.4.1 Wind Load

Uniform pressure (velocity pressure) of 51 pounds per sq. ft. acting inwards or outwards.

1.4.2 Normal Thermal Movement

Normal thermal movement is defined as that resulting from the following maximum change (range) in ambient temperature. Base design calculations on actual surface temperatures of metals due to both solar heat gain and nighttime sky heat loss.

1.4.3 Air-Performance, Water-Penetration, and Air-Leakage Ratings

Provide louvers complying with performance requirements indicated as demonstrated by testing manufacturer's stock units of height and width indicated. Test units according to AMCA 500.

1.5 PROJECT CONDITIONS

Field Measurements: Check actual louver openings by accurate field measurements before fabrication, and show recorded measurements on final Shop Drawings.

PART 2 PRODUCTS

2.1 FIXED, FORMED-METAL WALL LOUVERS AND FRAMES

Horizontal, Drainable, Fixed-Blade Louvers: Frames and extruded louver blades fabricated from metal of kind and in form indicated below, designed to collect and drain water to exterior at sill by means of gutters in front edges of blades and channels in jambs and mullions, complying with the following requirements:

a. Blade Metal and Thickness: Aluminum sheet, 0.040 inch.

b. Frame Metal and Thickness: Same as louver blades, unless otherwise indicated.

c. Frame Metal and Thickness: Extruded aluminum, 0.125 inch.

d. Louver Depth: 6 inches.

e. Blade Angle: 45 degrees.

f. Performance Requirements: As follows, determined by testing units 48 inches wide by 48 inches high per AMCA 500:

(1) Free Area: Not less than 8.00 sq. ft.

(2) Static Pressure Loss: Not more than 0.08 inch wg at an airflow of 800 fpm free area intake velocity.

(3) Water Penetration: Not more than 0.01 oz. per sq. ft. of free area at an airflow of 850 fpm free area velocity when tested for 15 minutes.

g. AMCA Seal: mark units with the AMCA Certified Ratings Seal.

2.2 LOUVER SCREENS

Louver Screening for Aluminum Louvers: Fit aluminum louver screen frames with screening covering louver openings and complying with the following requirements:

a. Insect Screening: 18 by 18 mesh formed with 0.009-inch-diameter stainless-steel wire.

2.3 BLANK-OFF PANELS

General: Fabricate blank-off panels from materials and to sizes indicated and to comply with the following requirements:

a. Finish: Match finish applied to louvers with respect to coating type, color, and gloss.

b. Attach blank-off panels to back of louver frames with (clips). (stainless-steel sheet-metal screws).

2.3.1 Insulated, Blank-Off Panels

Laminated metal-faced panels consisting of insulating core surfaced on back and front with metal sheets, complying with the following requirements:

a. Thickness: As indicated.

b. Metal Facing Sheets: Aluminum sheet, 0.032 inch thick.

c. Insulating Core: Unfaced, rigid, glass-fiberboard insulation complying with ASTM C 612, Class 1 and 2.

d. Insulating Core: Extruded-polystyrene insulation board complying

with ASTM C 578, Type VII 2.2 lb/cu. ft. density.

e. Edge Treatment: Trim perimeter edges of blank-off panels with louver manufacturer's standard extruded-aluminum-channel frames 0.081 inch thick, with corners mitered and with same finish as panels.

2.4 FINISHES, GENERAL

Comply with NAAMM "Metal Finishes Manual" for recommendations relative to applying and designating finishes.

a. Finish louvers after assembly.

2.5 ALUMINUM FINISHES

a. Finish designations prefixed by AA conform to the system established by the Aluminum Association for designating aluminum finishes.

b. Class I, Color Anodic Finish: AA-M12C22A42/A44 (Mechanical Finish: nonspecular as fabricated; Chemical Finish: etched, medium matte; Anodic Coating: Architectural Class I, integrally colored or electrolytically deposited color coating 0.7 mil (0.018 mm) or thicker) complying with AAMA 606.1 or AAMA 608.1.

1. Color: See drawings.

PART 3 EXECUTION

3.1 PREPARATION

Coordinate setting drawings, diagrams, templates, instructions, and directions for installation of anchorages that are to be embedded in concrete or masonry construction. Coordinate delivery of such items to Project Site.

3.2 INSTALLATION

a. Locate and place louver units plumb, level, and at indicated alignment with adjacent work.

b. Use concealed anchorages where possible. Provide brass or lead washers fitted to screws where required to protect metal surfaces and to make a weathertight connection.

c. Form closely fitted joints with exposed connections accurately located and secured.

d. Provide perimeter reveals and openings of uniform width for sealants and joint fillers, as indicated.

e. Repair finishes damaged by cutting, welding, soldering, and grinding operations required for fitting and jointing. Restore finishes so there is no evidence of corrective work. Return items that cannot be refinished in the field to the shop, make required alterations, and refinish entire unit, or provide new units.

f. Protect galvanized and nonferrous metal surfaces from corrosion or

galvanic action by applying a heavy coating of bituminous paint on surfaces that will be in contact with concrete, masonry, or dissimilar metals.

g. Install concealed gaskets, flashings, joint fillers, and insulation, as louver installation progresses, where required to make louver joints weathertight. Comply with SECTION 07900 for sealants applied during installation of louver.

3.3 ADJUSTING AND PROTECTION

a. Protect louvers and vents from damage of any kind during construction period including use of temporary protective coverings where needed and approved by louver manufacturer. Remove protective covering at time of Substantial Completion.

b. Restore louvers and vents damaged during installation and construction period, so that no evidence remains of correction work. If results of restoration are unsuccessful, remove damaged units and replace with new units. Clean and touch-up minor abrasions in finishes with air-dried coating that matches color and gloss of, and is compatible with, factory-applied finish coating.

c. Test operation of adjustable wall louvers and adjust as needed to produce fully functioning units that comply with requirements.

3.4 CLEANING

a. Periodically clean exposed surfaces of louvers and vents that are not protected by temporary covering to remove fingerprints and soil during construction period. Do not let soil accumulate until final cleaning.

b. Before final inspection, clean exposed surfaces with water and a mild soap or detergent not harmful to finishes. Rinse surfaces thoroughly and dry.

-- End of Section --

SECTION 10430

EXTERIOR SIGNAGE
06/98

PART 1 GENERAL

1.1 GENERAL

All exterior signage shall be provided by a single manufacturer. Exterior signage shall be of the design, detail, sizes, types, and message content shown on the drawings, shall conform to the requirements specified, and shall be provided at the locations indicated. Signs shall be complete with lettering, framing as detailed, and related components for a complete installation.

1.2 CHARACTER PROPORTIONS AND HEIGHTS

Letters and numbers on indicated signs for handicapped-accessible buildings shall have a width-to-height ratio between 3:5 and 1:1 and a stroke-width-to-height ratio between 1:5 and 1:10. Characters and numbers on indicated signs shall be sized according to the viewing distance from which they are to be read. The minimum height is measured using an upper case letter "X". Lower case characters are permitted.

1.3 SUBMITTALS

Government approval is required for submittals with a "G" designation; submittals not having a "G" designation are for information only. When used, a designation following the "G" designation identifies the office that will review the submittal for the Government. The following shall be submitted in accordance with Section 01330 SUBMITTAL PROCEDURES:

SD-02 Shop Drawings

Approved Detail Drawings; G

Drawings showing elevations of each type of sign; dimensions, details, and methods of mounting or anchoring; shape and thickness of materials; and details of construction. A schedule showing the location, each sign type, and message shall be included.

SD-03 Product Data

Individual Letter/Number Signs; G

Manufacturer's descriptive data and catalog cuts.

Installation; G

Manufacturer's installation instructions and cleaning instructions.

SD-04 Samples

Individual Letter/Number Signs;

One full size sample of 8 min. letter and for each color specified.

1.4 QUALIFICATIONS

Signs, plaques, and dimensional letters shall be the standard product of a manufacturer regularly engaged in the manufacture of the products. Items of equipment shall essentially duplicate equipment that has been in satisfactory use at least 5 years prior to bid opening.

1.5 DELIVERY AND STORAGE

Materials shall be wrapped for shipment and storage, delivered to the jobsite in manufacturer's original packaging, and stored in a clean, dry area in accordance with manufacturer's instructions.

1.6 WARRANTY

Manufacturer's standard performance guarantees or warranties that extend beyond a one year period shall be provided.

PART 2 PRODUCTS

2.1 INDIVIDUAL LETTER/NUMBER SIGNS

Letter and number style shall be "Berling" bold upper case, 8 inch tall by 3/4-inch thick expanded plastic for exterior use. Color shall be federal standard 595A or 20100. Building letters and numbers based upon the base standards furnished by "Sign Media Co" . The individual letters and numbers shall compose the following sign or combination of letters and numbers approved by the Contracting Officer:

F-22 OPERATIONS FLIGHT KITCHEN

2.2 SHOP FABRICATION AND MANUFACTURE

2.2.1 Dissimilar Materials

Where dissimilar metals are in contact, or where aluminum is in contact with concrete, mortar, masonry, wet or pressure-treated wood, or absorptive materials subject to wetting, the surfaces shall be protected with a coat of asphalt varnish or a coat of zinc-molybdate primer to prevent galvanic or corrosive action.

2.2.2 Shop Painting

Surfaces of miscellaneous metal work, except nonferrous metal, corrosion resisting steel, and zinc-coated work, shall be given one coat of zinc-molybdate primer or an approved rust-resisting treatment and metallic primer in accordance with manufacturer's standard practice. Surfaces of items to be embedded in concrete shall not be painted. Upon completion of work, damaged surfaces shall be recoated.

PART 3 EXECUTION

3.1 INSTALLATION

Individual letters and numbers shall be installed in accordance with approved manufacturer's instructions at locations shown on the approved

detail drawings. Signs shall be installed plumb and true at mounting heights indicated, and by method shown or specified. Signs mounted on other surfaces shall not be installed until finishes on such surfaces have been completed.

3.1.1 Anchorage

Anchorage and fastener materials shall be in accordance with approved manufacturer's instructions for the indicated substrate. Anchorage not otherwise specified or indicated shall include slotted inserts, expansion shields, and powder-driven fasteners when approved for concrete; toggle bolts and through bolts for masonry; machine carriage bolts for steel; lag bolts and screws for wood.

3.1.2 Protection and Cleaning

Exterior signs shall be protected against damage during construction. Hardware and electrical equipment shall be adjusted for proper operation. Covering shall be maintained until instructed to be removed by the Contracting Officer or until the facility is to be opened for business. Signs shall be cleaned, as required, at time of cover removal.

-- End of Section --

SECTION 10440

INTERIOR SIGNAGE
06/98

PART 1 GENERAL

1.1 SUBMITTALS

Government approval is required for submittals with a "G" designation; submittals not having a "G" designation are for information only. When used, a designation following the "G" designation identifies the office that will review the submittal for the Government. The following shall be submitted in accordance with Section 01330 SUBMITTAL PROCEDURES:

SD-02 Shop Drawings

Detail Drawings; G

Drawings showing elevations of each type of sign, dimensions, details and methods of mounting or anchoring, shape and thickness of materials, and details of construction. A schedule showing the location, each sign type, and message shall be included.

SD-03 Product Data

Installation;

Manufacturer's descriptive data, catalogs cuts, installation and cleaning instructions.

SD-04 Samples

Interior Signage;

One sample of each of the following sign types showing typical quality and workmanship. The samples may be installed in the work, provided each sample is identified and location recorded.

a. Door identification sign.

Three samples of manufacturer's standard color chips for each material requiring color selection.

SD-10 Operation and Maintenance Data

Operation and maintenance data shall be provided for all equipment, components and items of work specified herein where standard data is routinely and commercially available by the manufacturer. Submit in accordance with Section 01781 OPERATION AND MAINTENANCE DATA.

1.2 GENERAL

Interior signage shall be of the design, detail, sizes, types, and message content shown on the drawings, shall conform to the requirements specified, and shall be provided at the locations indicated. Signs shall be complete with lettering, framing as detailed, and related components for a complete installation.

1.2.1 Character Proportions and Heights

Letters and numbers on indicated signs in handicapped-accessible buildings, which do not designate permanent rooms or spaces, shall have a width-to-height ratio between 3:5 and 1:1 and a stroke-width-to-height ratio between 1:5 and 1:10. Characters and numbers on indicated signs shall be sized according to the viewing distance from which they are to be read. The minimum height is measured using an upper case letter "X". Lower case characters are permitted.

1.2.2 Raised and Brailled Characters and Pictorial Symbol Signs (Pictograms)

Letters and numbers on indicated signs which designate permanent rooms and spaces in handicapped-accessible buildings shall be raised 1/32 inch upper case, sans serif or simple serif type and shall be accompanied with Grade 2 Braille. Raised characters shall be at least 5/8 inch in height, but no higher than 2 inches. Pictograms shall be accompanied by the equivalent verbal description placed directly below the pictogram. The border dimension of the pictogram shall be 6 inches minimum in height. Indicated accessible facilities shall use the international symbol of accessibility.

1.3 QUALIFICATIONS

Signs, plaques, and dimensional letters shall be the standard product of a manufacturer regularly engaged in the manufacture of such products and shall essentially duplicate signs that have been in satisfactory use at least 2 years prior to bid opening.

1.4 DELIVERY AND STORAGE

Materials shall be delivered to the jobsite in manufacturer's original packaging and stored in a clean, dry area in accordance with manufacturer's instructions.

PART 2 PRODUCTS

2.1 ROOM IDENTIFICATION

Signs shall be fabricated of Type ES/MP laminated thermosetting plastic suitable for engraving. Reference drawings for sign color.

2.1.1 Sign Type A1: Changeable Message Strip Signs

Changeable message strip signs shall consist of laminated thermosetting Type MP plastic Type MP plastic captive message slider sign face with message slots and associated end caps, as detailed, for insertion of changeable message strips. Size of signs shall be as shown on the drawings. Individual message strips to permit removal, change, and reinsertion shall be provided as detailed. Corners of signs shall be squared.

2.1.2 Sign Types B1, B2, B3, B4, C1, and C2

Signs sizes and description as shown on drawings. Corners of signs shall be square.

2.1.3 Type of Mounting For Signs

Mounting for framed, hanging, and projecting signs shall be by mechanical fasteners. Surface mounted signs shall be provided with 1/16 inch thick vinyl foam tape. Sign inserts shall be provided with 1/16 inch thick foam tape.

2.1.4 Graphics

Letter style shall match base standards.

2.2 FABRICATION AND MANUFACTURE

2.2.1 Factory Workmanship

Holes for bolts and screws shall be drilled or punched. Drilling and punching shall produce clean, true lines and surfaces. Exposed surfaces of work shall have a smooth finish and exposed riveting shall be flush. Fastenings shall be concealed where practicable.

2.2.2 Dissimilar Materials

Where dissimilar metals are in contact, the surfaces will be protected to prevent galvanic or corrosive action.

2.3 COLOR, FINISH, AND CONTRAST

Color shall be as noted on drawing. In buildings required to be handicapped-accessible, the characters and background of signs shall be eggshell, matte, or other non-glare finish. Characters and symbols shall contrast with their background - either light characters on a dark background or dark characters on a light background.

PART 3 EXECUTION

3.1 INSTALLATION

Signs shall be installed in accordance with approved manufacturer's instructions at locations shown on the detail drawings. Signs shall be installed plumb and true at mounting heights indicated, and by method shown or specified. Required blocking shall be installed as detailed. Signs which designate permanent rooms and spaces in handicapped-accessible buildings shall be installed on the wall adjacent to the latch side of the door. Where there is no wall space to the latch side of the door, including at double leaf doors, signs shall be placed on the nearest adjacent wall. Mounting location for such signage shall be so that a person may approach within 3 inches of signage without encountering protruding objects or standing within the swing of a door. Signs on doors or other surfaces shall not be installed until finishes on such surfaces have been installed. Signs installed on glass surfaces shall be installed with matching blank back-up plates in accordance with manufacturer's instructions.

3.1.1 Anchorage

Anchorage shall be in accordance with approved manufacturer's instructions.

Anchorage not otherwise specified or shown shall include slotted inserts, expansion shields, and powder-driven fasteners when approved for concrete; toggle bolts and through bolts for masonry; machine carriage bolts for steel; lag bolts and screws for wood. Exposed anchor and fastener materials shall be compatible with metal to which applied and shall have matching color and finish. Where recommended by signage manufacturer, foam tape pads may be used for anchorage. Foam tape pads shall be minimum 1/16 inch thick closed cell vinyl foam with adhesive backing. Adhesive shall be transparent, long aging, high tech formulation on two sides of the vinyl foam. Adhesive surfaces shall be protected with a 5 mil green flatstock treated with silicone. Foam pads shall be sized for the signage as per signage manufacturer's recommendations. Signs mounted to painted gypsum board surfaces shall be removable for painting maintenance. Signs mounted to lay-in ceiling grids shall be mounted with clip connections to ceiling tees.

3.1.2 Protection and Cleaning

The work shall be protected against damage during construction. Hardware and electrical equipment shall be adjusted for proper operation. Glass, frames, and other sign surfaces shall be cleaned in accordance with the manufacturer's approved instructions.

-- End of Section --

SECTION 10505

STEEL CLOTHING LOCKERS
09/99

PART 1 GENERAL

1.1 REFERENCES

The publications listed below form a part of this specification to the extent referenced. The publications are referred to within the text by the basic designation only.

AMERICAN SOCIETY FOR TESTING AND MATERIALS (ASTM)

ASTM A 366	Specification for Steel, Carbon, Cold Rolled Sheet, Commercial Quality
ASTM A 525	Specification for General Requirements for Steel Sheet, Zinc-Coated (Galvanized) by the Hot-Dip Process
ASTM A 526	Specification for Steel Sheet, Zinc-Coated (Galvanized) by the Hot-Dip Process, Commercial Quality

1.2 SUBMITTALS

Submit the following in accordance with Section 01330, "Submittal Procedures."

SD-02 Shop Drawings

Types

Location

Installation

Numbering system

SD-03 Product Data

Material

Finish

Locker components

Assembly instructions

SD-04 Samples

Color chips; G

1.3 DELIVERY, HANDLING, AND STORAGE

Deliver lockers and associated materials in their original packages,

containers, or bundles bearing the manufacturer's name and the name of the material. Protect from weather, soil, and damage during delivery, storage, and construction.

1.4 FIELD MEASUREMENTS

To ensure proper fits, make field measurements prior to the preparation of drawings and fabrication.

1.5 QUALITY ASSURANCE

1.5.1 Color Chips

Provide a minimum of three color chips, not less than 3 inches square, of each color indicated on drawings.

PART 2 PRODUCTS

2.1 WARDROBE LOCKERS

Size as indicated on drawings.

2.1.1 Body

Form backs, tops, bottoms, sides, and intermediate partitions of flanged 0.0239-inch minimum steel sheet.

2.1.2 Frames

a. Form channel frames of 0.0598-inch minimum steel sheet. Form continuous integral strike on vertical frame members or weld 0.0897-inch minimum latch hooks to latch strike frame.

b. Cross Frames: Form intermediate channel cross frames to double- or triple-tier lockers of 0.0598-inch minimum steel sheet.

2.1.3 Shelf

Form 0.0239-inch minimum steel sheet hat shelf in single-tier units.

2.1.4 Door

One-piece steel sheet, flanged at all edges, constructed to prevent springing when opening or closing. Fabricate to swing 180 degrees.

a. 2. Thickness: 0.0747-inch minimum.

2.1.5 Reinforcing and Sound-Dampening Panels

Brace or reinforce inner face of doors with manufacturer's standard reinforcing angles, channels, or stiffener panels.

2.1.6 Louvered Vents

Stamped, louvered vents in door face, as follows:

a. Single-Tier Lockers: No fewer than 6 louver openings top and bottom.

2.1.7 Hinges

Steel, full-loop, 5- or 7-knuckle tight pin, 2 inches high minimum. Weld to inside of frame and secure to door with not fewer than 2 factory-installed fasteners that are completely concealed and tamperproof when door is closed.

a. Provide at least 3 hinges for each door.

2.1.8 Recessed Hand and Latch

Housing to form recess for latch lifter and locking devices; nonprotruding latch lifter containing strike and eye for padlock; and automatic, prelocking, pry-resistant latch mechanism with latching action as follows:

a. Single-Tier Lockers: Not less than 3-point latching.

2.2 MATERIAL

2.2.1 Steel Sheet

ASTM A 366, commercial-quality, stretcher-leveled, cold-rolled carbon steel sheet, stretcher leveled, free of buckling, scale, and surface imperfections.

2.2.2 Hot-Dip Zinc-Coated Steel Sheet

ASTM A 526, commercial-quality, zinc-coated, carbon-steel sheet, hot-dip galvanized according to ASTM A 525 with A 60 (ZF 180) or G 60 (Z 180) coating designation.

2.2.3 Fasteners

Zinc- or nickel-plated steel; slotless-type exposed bolt heads; self-locking nuts or lock washers for nuts on moving parts.

2.2.4 Equipment

Manufacturer's standard plated steel hooks or coat rods.

2.3 LOCKER ACCESSORIES

2.3.1 Equipment

Furnish each locker with the following items, unless otherwise shown:

a. Single Units: 2 single-prong wall hooks.

b. Coat rod in lieu of ceiling hook.

2.3.2 Number Plates

Etched, embossed, or stamped, nonferrous-metal number plates or numbering system with numerals not less than 3/8 inch high. Number lockers in sequence; start with number 1. Attach plates to each locker door, near top, centered, with at least 2 fasteners of same finish as number plate.

2.3.3 Continuously Sloping Tops

Continuously Sloping Tops: Continuously sloped top, not less than 0.0359-inch steel sheet. Provide closures at ends and sloped corner fillers.

2.3.4 Filler Panels

0.0478-inch minimum steel sheet, factory fabricated.

2.3.5 Boxed End Panels

0.0598-inch (minimum steel sheet end-finishing panels to conceal exposed ends of nonrecessed lockers.

2.3.6 Finished End Panels

0.0239-inch minimum steel sheet end-finishing panels to conceal exposed ends of nonrecessed lockers.

2.4 LOCKER BENCHES

2.4.1 Bench Tops

1-piece units with laminated maple top approximately 12 inches wide (nominal) by 1 3/4 inches thick. Round all corners, sand smooth, and apply transparent sealer coating.

2.4.2 Pedestals

Steel pedestal supports. Furnish all fastenings and anchorages. Apply baked-enamel finish to pedestals.

a. Type: Tubular heavy duty pedestal with top flange and base, wall anchored.

b. Finish Color: To match locker units.

2.5 FABRICATION

a. Fabricate lockers square, rigid, and without warp, with metal faces flat and free of dents or distortion. Make exposed metal edges free of sharp edges and burrs, and safe to touch. Weld frame members together to form a rigid, 1-piece structure.

b. Form locker body panels, doors, shelves and accessories from 1-piece steel sheet unless otherwise indicated.

2.6 FINISHES, GENERAL

2.6.1 Metal Finishes

Comply with NAAMM "Metal Finishes Manual" for recommendations relative to applying and designating finishes.

a. Finish all steel surfaces and accessories, except prefinished stainless-steel and chrome-plated surfaces.

b. Protect mechanical finishes on exposed surfaces from damage by applying strippable, temporary protective covering prior to shipment.

2.6.2 Appearance of Finished Work

Variations in appearance of abutting or adjacent pieces are acceptable if they are within 1/2 of the range of approved samples. Noticeable variations in the same piece are not acceptable. Variations in appearance of other components are acceptable if they are within the range of approved samples and they are assembled or installed to minimize contrast.

2.7 STEEL SHEET FINISHES

2.7.1 Baked-Enamel Finish

Immediately after cleaning and pretreating, apply baked-enamel finish consisting of a thermosetting topcoat. Comply with paint manufacturer's instructions for application and baking to achieve a minimum dry film thickness of 1.1 mils on doors, frames, and legs, and 0.7 mil elsewhere.

a. Color and Gloss: As shown on drawings.

PART 3 EXECUTION

3.1 INSTALLATION

Install metal lockers complete at location and types indicated on drawings with accessories and components according to manufacturer's recommendations, and assembly instructions. Install plumb, level, rigid, and flush.

a. Anchor lockers to floors and walls at intervals recommended by manufacturer but no greater than 36 inches. Install anchors through back-up reinforcing plates where necessary to avoid metal distortion, using concealed fasteners.

b. Install recess trim to recessed lockers using concealed fasteners. Provide hairline joints and concealed splice plates.

c. Install sloping top units to lockers using concealed fasteners. Provide hairline joints and concealed splice plates.

d. Install finished end panels to conceal exposed ends of nonrecessed lockers.

e. Install locker benches complying with manufacturer's instructions.

(1) Uniformly space pedestals not more than 24 inches apart. Securely fasten to bench top and anchor to wall.

3.2 ADJUSTING, CLEANING, AND PROTECTION

a. Adjust doors and latches to operate easily without binding. Verify that integral locking devices are operating properly.

b. Clean interior and exposed exterior surfaces and polish stainless-steel and nonferrous metal surfaces.

c. Protect lockers from damage, abuse, dust, dirt, stain, or paint. Do not permit locker use during construction.

d. Touch up marred finishes, or replace locker units that cannot be restored to factory-finished appearance. Use only materials and procedures recommended or furnished by locker manufacturer.

-- End of Section --

SECTION 10522

FIRE EXTINGUISHERS CABINETS
8/01

PART 1 GENERAL

1.1 REFERENCES

The publications listed below form a part of this specification to the extent referenced. The publications are referred to in the text by basic designation only.

AMERICAN NATIONAL STANDARDS INSTITUTE (ANSI)

ANSI A 156.18 Hardware - Materials and Finishes

1.2 GENERAL

Valve cabinets (VC-SR), semi-recessed (FEC-SR) and surface mounted (FEC-S) fire extinguishers cabinets shall be provided and installed where indicated on floor plan.

1.3 SUBMITTALS

Government approval is required for submittals with a "GA" designation; submittals having an "FIO" designation are for information only. The following shall be submitted in accordance with Section 01330 SUBMITTAL PROCEDURES:

SD-03 Product Data

SD-02 Shop Drawings

Cabinets; G

Drawings showing weights, gauges, or thicknesses of sheet metal; type of material; joining, expansion-joint spacing, and fabrication details; and installation procedures. Materials shall not be delivered to the site until after the approved detail drawings have been returned to the Contractor.

PART 2 PRODUCTS

2.1 DESCRIPTION

The heavy gauge rolled steel semi-recessed "FEC-SR" and surface mounted "FEC-S" fire extinguisher cabinets shall be approximately 27 inches high, 9 inches wide and 8 inches deep. A continuous piano hinge shall secure the rigid frame door with double strength glass (DSA) to the frame. The cabinet shall be in compliance with ANSI A 156.18 and shall be painted inside and out. Color shall be white. All recessed cabinets shall be 1 hour fire rated.

Provide fire extinguisher brackets where shown.

PART 3 EXECUTION

3.1 INSTALLATION

Installation shall be in accordance with the approved shop drawings and in compliance with NFPA. General Contractor shall verify all locations of cabinets with all work before shop drawing submittal. Installation shall not be initiated until completion of room painting and finishing operations.

-- End of Section --

SECTION 10800

TOILET ACCESSORIES
04/01

PART 1 GENERAL

1.1 REFERENCES

The publications listed below form a part of this specification to the extent referenced. The publications are referred to in the text by basic designation only.

AMERICAN SOCIETY FOR TESTING AND MATERIALS (ASTM)

ASTM C 1036 (1991; R 1997) Flat Glass

1.2 SUBMITTALS

Government approval is required for submittals with a "G" designation; submittals not having a "G" designation are for information only. When used, a designation following the "G" designation identifies the office that will review the submittal for the Government. The following shall be submitted in accordance with Section 01330 SUBMITTAL PROCEDURES:

SD-03 Product Data

Finishes
Accessory Items

Manufacturer's descriptive data and catalog cuts indicating materials of construction, fasteners proposed for use for each type of wall construction, mounting instructions, operation instructions, and cleaning instructions.

SD-04 Samples

Finishes
Accessory Items

One sample of each accessory proposed for use. Approved samples may be incorporated into the finished work, provided they are identified and their locations noted.

1.3 DELIVERY, STORAGE, AND HANDLING

Toilet accessories shall be wrapped for shipment and storage, delivered to the jobsite in manufacturer's original packaging, and stored in a clean, dry area protected from construction damage and vandalism.

1.4 WARRANTY

Manufacturer's standard performance guarantees or warranties that extend beyond a 1 year period shall be provided.

PART 2 PRODUCTS

2.1 MANUFACTURED UNITS

Toilet accessories shall be provided where indicated in accordance with paragraph SCHEDULE. Porcelain type, tile-wall accessories are specified in Section 09310 CERAMIC TILE. Each accessory item shall be complete with the necessary mounting plates and shall be of sturdy construction with corrosion resistant surface.

2.1.1 Anchors and Fasteners

Anchors and fasteners shall be capable of developing a restraining force commensurate with the strength of the accessory to be mounted and shall be suited for use with the supporting construction. Exposed fasteners shall have oval heads and shall be finished to match the accessory.

2.1.2 Finishes

Except where noted otherwise, finishes on metal shall be provided as follows:

Metal	Finish
Stainless steel	No. 4 satin finish
Carbon steel, copper alloy, and brass	Chromium plated, bright

2.2 ACCESSORY ITEMS

Accessory items shall conform to the requirements specified below. Reference toilet accessories legend on drawings for key.

2.2.1 Grab Bar (GB) TA-7

Grab bar shall be 18 gauge, 1-1/4 inches OD Type 304 stainless steel. Grab bar shall be form and length as indicated. Concealed mounting flange shall have mounting holes concealed. Grab bar shall have peened non-slip surface. Installed bars shall be capable of withstanding a 500 pound vertical load without coming loose from the fastenings and without obvious permanent deformation. Space between wall and grab bar shall be 1-1/2 inch.

2.2.2 Mirrors, Glass (MG) TA-1

Glass for mirrors shall be Type I transparent flat type, Class 1-clear. Glazing Quality q1 1/4 inch thick conforming to ASTM C 1036. Glass shall be coated on one surface with silver coating, copper protective coating, and mirror backing paint. Silver coating shall be highly adhesive pure silver coating of a thickness which shall provide reflectivity of 83 percent or more of incident light when viewed through 1/4 inch thick glass, and shall be free of pinholes or other defects. Copper protective coating shall be pure bright reflective copper, homogeneous without sludge, pinholes or other defects, and shall be of proper thickness to prevent "adhesion pull" by mirror backing paint. Mirror backing paint shall consist of two coats of special scratch and abrasion-resistant paint and shall be baked in uniform thickness to provide a protection for silver and copper coatings which will permit normal cutting and edge fabrication.

Reference Section 08810, "Glass and Glazing," for full width mirrors (TA-1)

2.2.3 Combination Paper Towel Dispenser/Waste Receptacle Units (PTDWR) TA-3

Dispenser/receptacle shall be recessed and shall have a capacity of 600 sheets of C-fold, single-fold, or quarter-fold towel. Waste receptacle shall be designed to be locked in unit and removable for service. Locking mechanism shall be tumbler key lock. Waste receptacle shall have a capacity of 12 gallons. Unit shall be fabricated of not less than 304 stainless steel welded construction with all exposed surfaces having a satin finish. Waste receptacle that accepts reusable liner standard for unit manufacturer shall be provided.

2.2.4 Sanitary Napkin Disposer (SND) TA-8

Sanitary napkin disposal shall be constructed of 22-gauge, Type 304 stainless steel with removable leak-proof receptacle for disposable liners. Fifty disposable liners of the type standard with the manufacturer shall be provided. Receptacle shall be retained in cabinet by tumbler lock. Disposer shall be provided with a cover that flips up for disposal of sanitary napkins, and shall be surface mounted.

2.2.5 Sanitary Napkin and Tampon Dispenser (SNTD) TA-9

Sanitary napkin and tampon dispenser shall be surface mounted. Dispenser, including door shall be 22-gauge, Type 304 stainless steel and shall dispense both napkins and tampons with a minimum capacity of 20 each. Dispensing mechanism shall be for coin operation. Coin mechanisms shall have minimum denominations of 10 cents, 25 cents. Doors shall be hung with a full-length corrosion-resistant steel piano hinge and secured with a tumbler lock. Keys for coin box shall be different from the door keys.

2.2.6 Soap Dispenser (SD) TA-2

Soap dispenser shall be surface mounted, liquid type consisting of a vertical Type 304 stainless steel tank with holding capacity of 24 fluid ounces with a corrosion-resistant all-purpose valve that dispenses liquid soaps, lotions, detergents and antiseptic soaps.

2.2.7 Utility Shelf with Mop/Broom Holders and Rag Hooks TA-5

Shelf shall be 18-gauge, Type 304 stainless steel supported between brackets or on brackets with mop and broom holders and rag hooks riveted to shelf. Brackets shall prevent lateral movement of the shelf. Shelf shall be 30 inches long with 17 inches long drying rod. Shelf and brackets shall be stainless steel.

2.2.8 Toilet Tissue Dispenser (TTD) TA-4

Toilet tissue holder shall be Type II - surface mounted with two rolls of standard tissue stacked vertically. Cabinet shall be stainless steel, satin finish.

2.2.9 Metal Mirror (MT) TA-10

Metal mirror shall be bright polished stainless steel, mirror quality, 0.037-inch minimum thickness, edges turned back 1/4-inch and recess fitted with tempered hard board backing.

2.2.10 Soap Dispenser (SH) TA-6

Soap holder shall be surface mounted Type 304 stainless steel.

PART 3 EXECUTION

3.1 INSTALLATION

Toilet accessories shall be securely fastened to the supporting construction in accordance with the manufacturer's approved instructions. Accessories shall be protected from damage from the time of installation until acceptance.

3.2 CLEANING

Material shall be cleaned in accordance with manufacturer's recommendations. Alkaline or abrasive agents shall not be used. Precautions shall be taken to avoid scratching or marring of surfaces.

-- End of Section --

SECTION 11310

PUMPS; SEWAGE AND SLUDGE
11/90

PART 1 GENERAL

1.1 REFERENCES

The publications listed below form a part of this specification to the extent referenced. The publications are referred to in the text by the basic designation only.

AMERICAN BEARING MANUFACTURERS ASSOCIATION (ABMA)

AFBMA Std 9	(1990) Load Ratings and Fatigue Life for Ball Bearings
AFBMA Std 11	(1990) Load Ratings and Fatigue Life for Roller Bearings

AMERICAN SOCIETY FOR TESTING AND MATERIALS (ASTM)

ASTM A 36	(2001) Standard Specification for Carbon Structural Steel
ASTM A 153/A 153M	(1998) Zinc Coating (Hot-Dip) on Iron and Steel Hardware
ASTM A 283	(2000) Standard for Low and Intermediate Tensile Strength Carbon Steel Plates
ASTM C 478	Standard Specification for Precast Reinforced Concrete Manhole Sections

ASME INTERNATIONAL (ASME)

ASME B40.1	(1991) Gauges - Pressure Indicating Dial Type - Elastic Element

AMERICAN WATER WORKS ASSOCIATION (AWWA)

AWWA C104	American National Standard for Cement-Mortar Lining for Ductile-Iron Pressure Pipe and Fittings for Water
AWWA C110	American National Standard for Ductile-Iron and Gray-Iron Fittings, 3 in. through 48 in., for Water and Other Liquids
AWWA C111	American National Standard for Rubber Gasket Joints for Ductile-Iron Pressure Pipe and Fittings
AWWA C151	American National Standard for

	Ductile-Iron Pipe, Centrifugally Cast, for Water or Other Liquids
AWWA C106	American National Standard for Cast-Iron Pipe Centrifugally Cast in Metal Molds for Water or Other Liquids

MANUFACTURERS STANDARDIZATION SOCIETY OF THE VALVE AND FITTINGS INDUSTRY (MSS)

MSS SP 80	(1997) Bronze Gate, Globe, Angle and Check Valves
MSS SP 78	(1997) Bronze Plug Valves

NATIONAL ELECTRICAL MANUFACTURERS ASSOCIATION (NEMA)

NEMA ICS 1	(1993) Industrial Controls and Systems
NEMA MG 1	(1993; Rev 1; Rev 2; Rev 3; Rev 4) Motors and Generators

NATIONAL FIRE PROTECTION ASSOCIATION (NFPA)

NFPA 70	(1999) National Electrical Code

1.2 SUBMITTALS

Government approval is required for submittals with a "G" designation; submittals not having a "G" designation are for information only. When used, a designation following the "G" designation identifies the office that will review the submittal for the Government. The following shall be submitted in accordance with Section 01330 SUBMITTAL PROCEDURES:

SD-02 Shop Drawings

Equipment Installation; G

Drawings containing complete wiring and schematic diagrams and any other details required to demonstrate that the system has been coordinated and will properly function as a unit. Drawings shall show proposed layout and anchorage of equipment and appurtenances, and equipment relationship to other parts of the work including clearances for maintenance and operation.

SD-03 Product Data

Site Sanitary Lift Station Requirements; G

Pump characteristic curves showing capacity in gpm, net positive suction head (NPSH), head, efficiency, and pumping horsepower from 0 gpm to 110 percent (100 percent for positive displacement pumps) of design capacity. A complete list of equipment and material, including manufacturer's descriptive data and technical literature, performance charts and curves, catalog cuts, and installation instructions.

Site Sanitary Lift Station Requirements

Spare parts data for each different item of material and equipment specified, after approval of the related submittals, and not later than 6 months prior to the date of beneficial occupancy. The data shall include a complete list of parts and supplies, with current unit prices and source of supply.

Site Sanitary Lift Station Requirements; G

Diagrams, instructions, and other sheets proposed for posting.

SD-06 Test Reports

Field Testing and Adjusting Equipment; G

Performance test reports in booklet form showing all field tests performed to adjust each component and all field tests performed to prove compliance with the specified performance criteria, upon completion and testing of the installed system. Each test report shall indicate the final position of controls.

SD-10 Operation and Maintenance Data

Site Sanitary Lift Station Requirements; G

Six copies of operation and six copies of maintenance manuals for the equipment furnished. One complete set prior to performance testing and the remainder upon acceptance. Operation manuals shall detail the step-by-step procedures required for system startup, operation, and shutdown. Operation manuals shall include the manufacturer's name, model number, parts list, and brief description of all equipment and their basic operating features. Maintenance manuals shall list routine maintenance procedures, possible breakdowns and repairs, and troubleshooting guides. Maintenance manuals shall include piping and equipment layout and simplified wiring and control diagrams of the system as installed. Manuals shall be approved prior to the field training course.

1.3 SITE SANITARY LIFT STATION REQUIREMENTS

The site sanitary lift station shall be an automatic lift station with duplex sewage pumps, complete with all necessary equipment to provide a fully operational lift station. Basins shall be fiberglass, precast concrete, or cast in place concrete. Buoyancy shall be considered for all lift stations that enter the water table. See the appendices to specifications for water table data. Control panel shall be mounted on the face of the Flight Kitchen as shown on electrical drawings, and be provided with a locking mechanism, and 100 decibel audio and visual alarm devices. Discharge monitor and pump station power supply monitor shall be connected to audio and visual alarms. Alarm shall have manual test button. A suitable access cover with heavy-duty hinges and locking hasp shall be provided for access into the wet well. A guide rail, discharge base elbow, and sealing flange connection system shall be provided for the pump. The cover shall be secured by stainless steel bolts and factory coated with 3-4 mil, thick rust-inhibiting paint. An adjacent valve vault shall be constructed as shown on civil drawings.

1.4 DELIVERY AND STORAGE

All equipment delivered and placed in storage shall be stored with protection from the weather, excessive humidity and excessive temperature variation; and dirt, dust, or other contaminants.

1.5 FIELD MEASUREMENTS

The Contractor shall become familiar with all details of the work, verify all dimensions in the field, and shall advise the Contracting Officer of any discrepancy before performing the work.

PART 2 PRODUCTS

2.1 GENERAL MATERIAL AND EQUIPMENT REQUIREMENTS

Materials and equipment shall be the standard products of a manufacturer regularly engaged in the manufacture of such products and shall essentially duplicate items that have been in satisfactory use for at least 2 years prior to bid opening. Equipment shall be supported by a service organization that is, in the opinion of the Contracting Officer, reasonably convenient to the site. Pump casings shall be constructed of cast iron of uniform quality and free from blow holes, porosity, hard spots, shrinkage defects, cracks, and other injurious defects. Impellers shall be cast iron unless otherwise specified for rotors.

2.1.1 Nameplates

Each major item of equipment shall have the manufacturer's name, address, type or style, model or serial number, and catalog number on a plate secured to the item of equipment.

2.1.2 Equipment Guards

Belts, pulleys, chains, gears, projecting setscrews, keys, and other rotating parts so located that any person may come in close proximity thereto shall be enclosed or guarded.

2.1.3 Special Tools

One set of special tools, calibration devices, and instruments required for operation, calibration, and maintenance of the equipment shall be provided.

2.1.4 Electric Motors

Motors shall conform to NEMA MG 1.

2.1.5 Motor Controls

Controls shall conform to NEMA ICS 1.

2.1.6 Bolts, Nuts, Anchors, and Washers

Bolts, nuts, anchors, and washers shall be steel; galvanized in accordance with ASTM A 153/A 153M.

2.1.7 Pressure Gauges

Compound gauges shall be provided on the suction side of pumps and standard pressure gauges on the discharge side of pumps. Gauges shall comply with ASME B40.1. Gauge ranges shall be as appropriate for the particular

installation.

2.1.8 Seal Water Systems

2.1.8.1 Auxiliary Equipment

Auxiliary equipment required to complete the system shall be as indicated and shall include the necessary piping, valving, pressure gauges, pressure regulators, pressure switches, solenoid valves, strainers, and accessories.

2.2 SUBMERSIBLE CENTRIFUGAL PUMPS

Submersible centrifugal pumps shall be centrifugal type pumps designed to pump solids up to 3 inches in diameter and shall be capable of withstanding submergence as required for the particular installation.

2.2.1 Pump Characteristics (Grinder Pump)

Site Sanitary Lift Station Pump Characteristics

Sanitary Pump Station No.	Design Capacity (gpm)	Total Dynamic Head (ft)	Horse-Power (hp)
1	45	11.00	2

2.2.2 Pump Casing

The casing shall be capable of withstanding operating pressures 50 percent greater than the maximum operating pressures. The volute shall have smooth passages which provide unobstructed flow through the pump.

2.2.3 Mating Surfaces

Mating surfaces where watertight seal is required, including seal between discharge connection elbow and pump, shall be machined and fitted with nitrile rubber O-rings. Fitting shall be such that sealing is accomplished by metal-to-metal contact between mating surfaces, resulting in proper compression of the O-rings without the requirement of specific torque limits.

2.2.4 Coatings

Exterior surfaces of the casing in contact with sewage shall be protected by a sewage resistant coal tar epoxy coating. All exposed nuts and bolts shall be stainless steel.

2.2.5 Impeller

The impeller shall be of the double shrouded non-clogging design to minimize clogging of solids, fibrous materials, heavy sludge, or other materials found in sewage. The impeller shall be statically, dynamically, and hydraulically balanced within the operating range and to the first critical speed at 150 percent of the maximum operating speed. The impeller shall be securely keyed to the shaft with a locking arrangement whereby the impeller cannot be loosened by torque from either forward or reverse direction.

2.2.6 Wearing Rings

Wearing rings, when required, shall be renewable type and shall be provided on the impeller and casing and shall have wearing surfaces normal to the axis of rotation. Material for wear rings shall be standard of pump manufacturer. Wearing rings shall be designed for ease of maintenance and shall be adequately secured to prevent rotation.

2.2.7 Pump Shaft

The pump shaft shall be of high grade alloy steel and shall be of adequate size and strength to transmit the full driver horsepower with a liberal safety factor.

2.2.8 Seals

A tandem mechanical shaft seal system running in an oil bath shall be provided. Seals shall be of tungston carbide with each interface held in contact by its own spring system.

2.2.9 Bearings

Pump bearings shall be ball or roller type designed to handle all thrust loads in either direction. Pumps depending only on hydraulic balance end thrust will not be acceptable. Bearings shall have an ABEMA L-10 life of 50,000 hours minimum, as specified in AFBMA Std 9 or AFBMA Std 11.

2.2.10 Motor

The pump motor shall have Class F insulation, NEMA B design, in accordance with NEMA MG 1, and shall be watertight. The motor shall be either oil filled, air filled with a water jacket, or air filled with cooling fins which encircles the stator housing.

2.2.11 Power Cable

The power cable shall comply with NFPA 70, Type SO, and shall be of standard construction for submersible pump applications. The power cable shall enter the pump through a heavy duty entry assembly provided with an internal grommet assembly to prevent leakage. The cable entry junction chamber and motor shall be separated by a stator lead sealing gland or terminal board which shall isolate the motor interior from foreign material gaining access through the pump top. Epoxies, silicones, or other secondary sealing systems are not acceptable.

2.2.12 Installation Systems

2.2.12.1 Rail Mounted Systems

Rail mounted installation systems shall consist of guide rails, a sliding bracket, and a discharge connection elbow. Guide rails shall be of the size and type standard with the manufacturer and shall not support any portion of the weight of the pump. The sliding guide bracket shall be an integral part of the pump unit. The discharge connection elbow shall be permanently installed in the wet well along with the discharge piping. The pump shall be automatically connected to the discharge connection elbow when lowered into place and shall be easily removed for inspection and service without entering the pump well.

2.2.12.2 Lifting Chain

Lifting chain to raise and lower the pump through the limits indicated shall be provided. The chain shall be galvanized and shall be capable of supporting the pump.

2.2.13 Control Panel

A complete, unitized control panel shall be stand-mounted and located near the lift station. The panel, components, and wiring shall be in accordance with the National Electrical Code. The enclosure shall meet the requirements of NEMA 4X stainless steel weatherproof enclosure and shall have a dead front cover with separate inside hinged plate, removable back plate and drip shield. All circuit breaker operators or fused disconnects, selector switches, and gages shall be either front-mounted or extended through die-cut openings in the inside plate. No reciprocating or vibrating equipment will be permitted within, or mounted on, the control panel. All internal wiring shall be color coded in accordance with diagrams to be furnished by the Contractor. All electrical controls and devices shall be 208-volt, three-phase, 60-hertz. All panel mounted controls and instruments shall be prewired using 600-volt stranded copper conductor sized for their loads with 14 gage as minimum. Power, signal, and control wiring shall enter and leave the control panel from a terminal block with all wires labeled and color coded. All switches, control relays, circuit breakers, or fused disconnects, and other components, both inside and out, shall be permanently visibly identified. Properly sized, nonreversing, magnetic across-the-line type starters with overload protection, under-voltage release, indicating light, and "hand-off-automatic" selector switch shall be provided with each motor. A lock hasp shall be provided on the outside door. An alarm light shall be provided. When an alarm condition occurs, the light shall become bright and flash approximately once per second. The flashing light shall be accompanied by a 100 decibel audible alarm. The alarm light shall be vapor tight with red globe and cast guard. The alarm light shall be mounted on the control panel. A convenience outlet shall be provided for operation of 220-volt devices.

2.3 STEEL

Structural steel and steel plate shall conform to the applicable provisions of Specification ASTM A 36. Steel plate shall also conform to Specification ASTM A 283, Grade C.

2.4 PIPING

All piping, not otherwise covered, shall be 150 psi flanged cast or ductile-iron in accordance with AWWA C106 or AWWA C151, properly sized for its function, appropriately valved to regulate flow and rigidly supported throughout. The internal lift station discharge piping shall be as indicated on the drawings. The inlet and discharge arrangement shall be as indicated. Fittings and joint gaskets shall conform to the applicable requirements of AWWA C110 and AWWA C111. Piping and fittings shall be cement-mortar lined in accordance with AWWA C104.

2.5 VALVES

Valves shall conform to the following and shall be installed in a separate valve box (vault). Valve vaults shall be precast concrete units conforming to ASTM C 478.

2.5.1 Gate Valves

Gate valves shall be bronze and conform to MSS SP 80, Type I, Class 150, flanged, with non-rising stem, and operating handwheel.

2.5.2 Check Valves

Check valves on sewage piping shall be cast-iron, horizontal or vertical, single disk, swing type with full diameter passageway for 150 psi working pressure. Seats shall be cushioned. Gates shall be equipped with closing springs.

2.5.3 Plug Valves

Bronze plug valves shall conform to MSS SP 78. Iron plug valves shall conform to API Spec 6D.

2.6 WET WELLS

The Contractor shall construct wet wells of concrete or precast concrete unless delivered as a packaged fiberglass unit from the supplier. Wet well diameter shall be as indicated. Ladders shall not be installed. Concrete shall be specified elsewhere. Lift station wet wells shall conform to drawings in all elements of design. Vents shall be equipped with a stainless steel insect screen.

2.6.1 Frames and Covers

Frames and covers shall be as specified in Section 05500 MISCELLANEOUS METALS. The lift station shall be provided with a aluminum access cover, with heavy-duty hinges and locking hasp. The cover shall have provisions for ventilating the lift station.

2.7 ELECTRICAL WORK

Electrical motor driven equipment specified shall be provided complete with motors, motor starters, and controls. Electric equipment and wiring shall be in accordance with Section 16415 ELECTRICAL WORK, INTERIOR. Electrical characteristics shall be as specified or indicated. Motor starters shall be provided complete with thermal overload protection and other appurtenances necessary for the motor control specified. Manual or automatic control and protective or signal devices required for the operation specified, and any control wiring required for controls and devices but not shown, shall be provided.

PART 3 EXECUTION

3.1 EQUIPMENT INSTALLATION

3.1.1 Pump Installation

Pumping equipment and appurtenances shall be installed in the position indicated and in accordance with the manufacturer's written instructions. All appurtenances required for a complete and operating pumping system shall be provided, including such items as piping, conduit, valves, wall sleeves, wall pipes, concrete foundations, anchors, grouting, pumps, drivers, power supply, seal water units, and controls.

3.1.2 Concrete

Concrete shall conform to Section 03300 CAST-IN-PLACE STRUCTURAL CONCRETE.

3.2 PAINTING

Pumps and motors shall be thoroughly cleaned, primed, and given two finish coats of paint at the factory in accordance with the recommendations of the manufacturer. Field painting required for ferrous surfaces not finished at the factory is specified in Section 09900 PAINTING, GENERAL.

3.3 FIELD TESTING AND ADJUSTING EQUIPMENT

3.3.1 Operational Test

Prior to acceptance, an operational test of all pumps, drivers, and control systems shall be performed to determine if the installed equipment meets the purpose and intent of the specifications. Tests shall demonstrate that the equipment is not electrically, mechanically, structurally, or otherwise defective; is in safe and satisfactory operating condition; and conforms with the specified operating characteristics. Prior to applying electrical power to any motor driven equipment, the drive train shall be rotated by hand to demonstrate free operation of all mechanical parts. Tests shall include checks for excessive vibration, leaks in all piping and seals, correct operation of control systems and equipment, proper alignment, excessive noise levels, and power consumption.

3.3.2 Retesting

If any deficiencies are revealed during any test, such deficiencies shall be corrected and the tests shall be reconducted.

3.4 MANUFACTURER'S SERVICES

Services of a manufacturer's representative who is experienced in the installation, adjustment, and operation of the equipment specified shall be provided. The representative shall supervise the installation, adjustment, and testing of the equipment.

3.5 POSTING FRAMED INSTRUCTIONS

Framed instructions containing wiring and control diagrams under glass or in laminated plastic shall be posted where directed. Condensed operating instructions, prepared in typed form, shall be framed as specified above and posted beside the diagrams. The framed instructions shall be posted before acceptance testing of the system.

3.6 FIELD TRAINING

A field training course shall be provided for designated operating and maintenance staff members. Training shall be provided for a total period of 16 hours of normal working time and shall start after the system is functionally complete but prior to final acceptance tests. Field training shall cover all of the items contained in the operating and maintenance manuals.

-- End of Section --

SECTION 11400

FOOD SERVICE EQUIPMENT
01/02

PART 1 GENERAL

1.1 REFERENCES

The publications listed below form a part of this specification to the extent referenced. The publications are referred to in the text by basic designation only.

AMERICAN CONFERENCE OF GOVERNMENTAL INDUSTRIAL HYGIENISTS (ACGIH)

ACGIH-2092	(1998) Industrial Ventilation: A Manual of Recommended Practice (24th ed)

AMERICAN GAS ASSOCIATION LABORATORIES (AGAL)

AGAL Directory	(1996) Directory of AGA and CGA Certified Appliances and Accessories

AMERICAN SOCIETY FOR TESTING AND MATERIALS (ASTM)

ASTM A 123/A 123M	(2001) Zinc (Hot-Dip Galvanized) Coatings on Iron and Steel Products
ASTM A 167	(1999) Stainless and Heat-Resisting Chromium-Nickel Steel Plate, Sheet, and Strip
ASTM A 240/A 240M	(2000) Heat-Resisting Chromium and Chromium-Nickel Stainless Steel Plate, Sheet, and Strip for Pressure Vessels
ASTM A 269	(2000) Seamless and Welded Austenitic Stainless Steel Tubing for General Service
ASTM A 36/A 36M	(2000a) Carbon Structural Steel
ASTM D 520	(2000) Zinc Dust Pigment

AMERICAN WELDING SOCIETY (AWS)

AWS A5.8	(1992) Filler Metals for Brazing and Braze Welding

MANUFACTURERS STANDARDIZATION SOCIETY OF THE VALVE AND FITTINGS INDUSTRY (MSS)

MSS SP-110	(1996) Ball Valves Threaded, Socket-Welding, Solder Joint, Grooved and Flared Ends
MSS SP-72	(1999) Ball Valves with Flanged or Butt-Welding Ends for General Service

NATIONAL ELECTRICAL MANUFACTURERS ASSOCIATION (NEMA)

NEMA LD 3	(1995) High-Pressure Decorative Laminates

NATIONAL FIRE PROTECTION ASSOCIATION (NFPA)

NFPA 17A	(1998) Standard for Wet Chemical Extinguishing Systems
NFPA 54	(1999) National Fuel Gas Code
NFPA 70	(1999) National Electrical Code
NFPA 96	(1998) Ventilation Control and Fire Protection of Commercial Cooking Equipment

NSF INTERNATIONAL (NSF)

NSF 2	(1996) Food Equipment
NSF 35	(1999) Laminated Plastics for Surfacing Food Service Equipment
NSF 7	(1999) Commercial Refrigerators and Storage Freezers
NSF-01	(1994) Listings of Food Equipment and Related Products, Components, and Materials

SHEET METAL & AIR CONDITIONING CONTRACTORS' NATIONAL ASSOCIATION (SMACNA)

SMACNA HVAC Duct Const Stds	(1995; Addenda Nov 1997) HVAC Duct Construction Standards - Metal and Flexible

UNDERWRITERS LABORATORIES (UL)

UL 197	(1993; Rev thru Jan 2000) Commercial Electric Cooking Appliances
UL 207	(1993; Rev thru Oct 1997) Refrigerant-Containing Components and Accessories, Nonelectrical
UL 471	(1995; Rev thru Apr 1998) Commercial Refrigerators and Freezers
UL 489	(1996; Rev thru Dec 1998) Molded-Case Circuit Breakers, Molded-Case Switches, and Circuit-Breaker Enclosures
UL 710	(1995; Rev thru Apr 1999) Exhaust Hoods for Commercial Cooking Equipment
UL Elec Equip Dir	(1999) Electrical Appliance and Utilization Equipment Directory

1.2 GENERAL REQUIREMENTS

Food service equipment shall be of the sizes and types shown. Equipment, materials, and fixtures required for use in conjunction with the items to be furnished by the Government shall be installed by the Contractor. Equipment, materials, and fixtures indicated on the drawings and schedules shown as Contractor furnished and installed, shall be furnished and installed by the Contractor.

1.2.1 Mechanical, Electrical, and Plumbing Work

Plumbing systems, including final connections, shall be in accordance with Section 15400 PLUMBING, GENERAL PURPOSE. Electrical equipment, motors, wiring, and final connections shall be in accordance with Section 16415 ELECTRICAL WORK, INTERIOR. Gas piping and accessories, including final connections, shall be in accordance with Section 15190 GAS PIPING SYSTEMS. Duct work and accessories shall be in accordance with Section 15895 AIR SUPPLY, DISTRIBUTION, VENTILATION, AND EXHAUST SYSTEM. Painting shall be in accordance with Section 09900 PAINTS AND COATINGS. Air-conditioning systems shall be in accordance with Section 15700 UNITARY HEATING AND COOLING EQUIPMENT. Refrigerant piping shall be in accordance with Section 15182 REFRIGERANT PIPING.

1.2.2 Kitchen Fire Protection Systems

Each exhaust hood system that serves cooking equipment, associated exhaust hood system ducts, and all cooking equipment served by the exhaust hood system shall be protected with a wet chemical fire extinguishing system. The wet chemical fire extinguishing systems shall be in accordance with this Section . Grease extracting type hoods that have an internal hood fire protection system do not require wet chemical fire extinguishing protection for those components of the exhaust system, and for cooking equipment protected by a UL listed internal hood fire protection system complying to NFPA 96.

1.2.3 National Sanitation Foundation Standards

Food service equipment shall meet the requirements set forth by the National Sanitation Foundation (NSF). Acceptable evidence of meeting the requirements of the applicable NSF standards shall be either the equipment listed in NSF-01 displaying the NSF seal for the year the equipment was manufactured, a certification issued for special or specific food service equipment by NSF under their special one time contract evaluation and certification, or a certified test report from an independent testing laboratory, approved by the Office of the Surgeon General, indicating that the specific food service equipment has been tested and conforms to the applicable NSF standards.

1.2.4 Verification of Dimensions and Coordination of Project Data

The Contractor shall become familiar with all details of the work and shall advise the Contracting Officer of any discrepancy before performing any work. The Contractor shall perform the following:

a. Horizontal and vertical dimensions shall be field verified.

b. Contract drawings and submittal data shall be reviewed for accuracy and completeness.

c. The installed utility capacity and location shall be field checked.

d. Critical systems/components shall be reviewed for application and capacities such as for exhaust hoods, refrigeration systems, fire suppression systems, gas, water, and condensate line sizes and manifold configurations.

e. Delivery shall be coordinated for access through finished openings and vertical handling limitation within the building.

1.2.5 Standard Products

Materials and equipment shall be the standard products of manufacturer regularly engaged in the manufacture of the products and shall essentially duplicate items that have been in satisfactory use for at least 2 years prior to bid opening. The experience used shall include applications of equipment and materials under similar circumstances and of similar size. When two or more of the same products are supplied they shall be products of one manufacturer. Equipment shall be supported by a service organization that is, in the opinion of the Contracting Officer, reasonably convenient to the site.

1.2.6 Nameplates

Each item of equipment shall bear a stainless steel, aluminum, or engraved polyester nameplate, as standard with the manufacturer, located in a conspicuous position and permanently fastened to the equipment. Name or identification plates shall be of the size standard with the manufacturer for the particular piece of equipment provided. Name plates shall reflect the name of the manufacturer/trade name, serial number, make, and model number, pertinent ratings, operating characteristics, and other information as standard with the manufacturer, date of manufacture, electrical characteristics, and other applicable data, such as flow rate, temperature, pressure, capacity, and material of construction. Separate equipment identification plates with the contract number marked thereon, shall be securely fastened to the surface of each piece of equipment.

1.2.7 American Gas Association Laboratories Standards

Gas-burning equipment shall be designed for operation with the type of gas specified and shall be approved by AGAL. Acceptable evidence of meeting the requirements of the applicable AGAL Directory standards shall be either AGAL mark on equipment, a photostatic copy of the AGAL appliance certificate, a listing of the specific food service equipment or appliance in the AGAL Directory of Certified Appliances and Accessories, or a certified test report from a nationally recognized independent testing laboratory, indicating that the specified equipment has been tested and conforms to the requirements of the applicable AGAL standards.

1.2.8 Underwriters Laboratories Standards

Electrically operated equipment shall be in accordance with applicable UL standards such as UL 471, UL 489, UL 710 and UL 197. Evidence of meeting the requirements shall be a UL label on the equipment, a UL listing mark per UL Elec Equip Dir or a certified test report from a nationally recognized independent testing laboratory indicating that the specific food service equipment has been tested and conforms to the applicable UL standards.

1.3 SUBMITTALS

Government approval is required for submittals with a "G" designation; submittals not having a "G" designation are for information only. When used, a designation following the "G" designation identifies the office that will review the submittal for the Government. The following shall be submitted in accordance with Section 01330 SUBMITTAL PROCEDURES:

SD-02 Shop Drawings

Food Service Equipment; G
Installation; G

Data consisting of a complete list of equipment and materials. Detail drawings showing complete wiring, piping, and schematic diagrams, and any other details required to demonstrate that the system has been coordinated and will properly function as a unit. Drawings shall show proposed layout and anchorage of equipment and appurtenances, and equipment relationship to other parts of the work, including clearances for maintenance and operation.

a. Detail drawings by Contractor shall be separate drawings and shall be the contractor's standard sheet size, but not smaller than the contract drawings, and indicate the food service equipment and cold storage assemblies with itemized schedule, and special conditions drawings indicating size and location of slab depressions, cores, wall openings, blockouts, ceiling pockets, blocking grounds, ceiling and wall, access panels, and above ceiling hanger assemblies, rough-in plumbing/mechanical systems and rough-in electrical systems.

b. Detail drawings by manufacturer shall be separate drawings; sheet size shall be manufacturer's standard size and indicate item number, name, and quantity, construction details, sections, and elevations, adjacent walls, columns, and equipment, plumbing and electrical schematics, and fabricated fixtures with single electrical or plumbing connection, and service access panels required for maintenance or replacement of mechanical or electrical components.

c. Detail drawings by the Contractor that show the size, type, and location of equipment drain lines, and floor drains. Drawings shall indicate drain lines from equipment, distances of drain lines and floor drain receptacles from equipment and aisles, and elevation views of drain piping and floor drains.

SD-03 Product Data

Food Service Equipment; G

Manufacturer's descriptive and technical literature, performance charts and curves, catalog cuts, and installation instructions. Brochures shall have front and rear protective covers with labeled project name and include an index indicating item number, quantity, description, and manufacturer, a fly sheet for each component indicating item number, name, quantity, manufacturer, optional equipment, modification, special instruction, and utility requirements, and catalog specifications sheets.

SD-10 Operation and Maintenance Data

Operation and maintenance data shall be provided for all equipment, components and items of work specified herein where standard data is routinely and commercially available by the manufacturer. Submit in accordance with Section 01781 OPERATION AND MAINTENANCE DATA.

Food Service Equipment; G

Six complete copies of the service manual, not later than 3 months prior to the date of beneficial occupancy, with data for each different item of material and equipment specified. Service manuals shall include:

a. Front and rear protective covers with labeled project name.

b. Index indicating item number, quantity, description, manufacturer's name, and model number.

c. Maintenance instructions for stainless steel and plastic laminate.

d. Manufacturer's catalog specification sheets and manufacturer's detail and control drawings.

e. Manufacturer's operation manual outlining the step-by-step procedures for equipment installation, startup, basic operation features, and operation shutdown.

f. Manufacturer's maintenance manual listing routine maintenance procedures, possible breakdowns, repairs, and troubleshooting guides. The instructions shall include simplified diagrams for the equipment as installed.

g. Manufacturer's list of parts and supplies with current unit price and address of manufacturer's parts supply warehouse.

1.4 DELIVERY AND STORAGE

1.4.1 Delivery

Unless otherwise directed, the following procedures shall apply:

a. Field assembled fixed equipment integrated into structure shall be sent to jobsite when required.

b. Fixed equipment not integrated into structure shall be sent to the jobsite after completion of finished ceilings, lighting, and acidizing of the finished floor and wall systems, including painting.

c. Major movable equipment shall be delivered to inventory in a secured area for interim jobsite storage, or if secured area is not available, when fixed equipment installation/clean-up has been completed.

d. Minor appliances and loose items shall be delivered to the jobsite when the Contracting Officer is prepared to receive and inventory

such items.

1.4.2 Storage

Items delivered and placed into storage shall be stored with protection from weather, humidity, and temperature variation, dirt and dust, or other contaminants.

1.4.3 Protection of Fixed/Fabricated Manufactured Equipment

Fiberboard or plywood shall be taped to surfaces as required by equipment shape and installation access requirements.

1.4.4 Prohibited Use of Equipment

Food service equipment shall not be used as tool and material storage, work bench, scaffold, or stacking area.

1.4.5 Damaged Equipment

Contractor shall immediately submit documentation to the Contracting Officer with a recommendation of action for repair or replacement and the impact on project schedule.

PART 2 PRODUCTS

2.1 MATERIALS

The Contractor shall comply with EPA requirements in accordance with Section 01670 RECYCLED / RECOVERED MATERIALS. Other materials shall conform to the following:

2.1.1 Stainless Steel, Nonmagnetic

ASTM A 167 or ASTM A 240/A 240M: 18-8, 300 Series, austenitic, polished to No. 3 or 4 finish on exposed surfaces.

2.1.2 Stainless Steel Pipe and Tubing

ASTM A 269. Pipe and tubing shall be seamless or welded, of the gauge specified, of true roundness, and of material as specified for stainless steel. Seamless tubing shall be thoroughly annealed, pickled, and ground smooth. Welded tubing shall be thoroughly heat-treated, quenched to eliminate carbide precipitation and then drawn true to size and roundness, and ground. Tubing shall be given a No. 3 or 4 finish when exposed to view.

2.1.3 Galvanizing Repair Compound

ASTM D 520, Type I pigment.

2.1.4 Brazing Material

AWS A5.8, class shall be as applicable.

2.1.5 Steel Structural Shapes for Framing

ASTM A 36/A 36M. Structural shapes shall be uniform, ductile in quality, and shall be free of hard spots, runs, checks, cracks and other surface defects. Sections shall be galvanized by the hot-dip process, conforming

to ASTM A 123/A 123M.

2.1.6 Coatings

Coatings shall be of a durable, nontoxic, nondusting, nonflaking, and mildew-resistant type, suitable for use with food service equipment and in conformance with NSF 2. Application shall be in accordance with the recommendations of the manufacturer.

2.1.6.1 Exterior Parts

Exterior, galvanized parts, exposed members of framework, and wrought steel pipe, where specified to be painted, shall be cleaned, and free of foreign matter before applying a rust inhibiting prime and two coats of epoxy-based paint in accordance with Section 09900 PAINTS AND COATINGS, unless otherwise specified. Color shall be selected by the Contracting Officer from manufacturer's standard colors.

2.2 COUNTERS

Counters shall be constructed in accordance with applicable portions of NSF 2.

2.2.1 Counter Tops

Counter tops shall be constructed of 14 gauge stainless steel with all seams and corners welded, ground smooth, and polished.

2.2.2 Pitch and Drainage of Equipment Surfaces

Wherever a fixture has a waste or drain outlet, the surface shall have a distinct pitch toward such outlet. Corners shall be coved on 3/4 inch radius and sloped 1/8 inch per foot maintaining level crown at front edges of rolled rims, marine edges, and backsplashes, when tops are sloped to drains.

2.2.3 Counter Edges and Backsplashes

2.2.3.1 Counter Edges

Counter edges shall be one of the following types:

a. Turned Down: Two inches at 90 degrees with 3/4 inch tight hem at bottom. Free Corners shall be rounded on 3/4 inch radius.

b. Rolled Rim: Coved up 3 inches with 1-1/2 inch wide rim rolled 180 degrees and turned down to table top; hem edges, and bullnose corners.

2.2.3.2 Counter Backsplash

Counter backsplash shall be one of the following types:

a. Coved up 10 inches and sloped back 1-1/2 inches at the top on a 45-degree angle; 2-1/2 inch slope where piping occurs. Turned down 1 inch at 135 degrees at the rear of the splash with the ends closed to the bottom of the top turn down. Splash turn down shall be secured to wall with 4 inch long, 14 gauge stainless steel "zee" clips anchored to wall, 36 inches on center.

b. Turned up 6 inches at 90 degrees on 5/8 inch radius with edge turned back 1 inch at 90-degree angle with 1 inch turn down at 90 degrees at rear of splash with the ends closed to the bottom of the top turn down. Splash turn down shall be secured to wall with 4 inch long, 14 gauge stainless steel "zee" clips anchored to wall, 36 inches on center.

2.2.4 Counter Top Support Angles

Counter top support angles shall be of 1 inch by 4 inch by 1 inch 14 gauge stainless steel channels or 1-1/2 inches by 1-1/2 inches 14 gauge stainless steel angles with all corners mitered, welded, and ground smooth at perimeter. Cross members shall be provided on 24 inches centers maximum. Angle or channel frame shall be stud bolted to counter top.

2.2.5 Sound Deadening of Counters and Sinks

Counter tops and sinks shall be sound deadened with 1/2 inch wide rope sealant positioned continuously between all contact surfaces of the frame-members and the underside of counter top, overshelves and undershelves. Stud bolts shall be tightened for maximum compression and the excess sealant trimmed.

2.3 COUNTER BASES

Counter bases shall be open or closed as indicated.

2.3.1 Closed Bases

Closed bases shall be constructed with 1-1/2 inch by 1-1/2 inch, 14 gauge stainless steel angle with all corners mitered, welded, and ground smooth. Horizontal and vertical angles shall be provided on 24 inches centers or less. The enclosure panels on closed bases shall be of 18 gauge stainless steel with laminate plastic material conforming to NEMA LD 3 and NSF 35. Joint trim on enclosed bases shall be 2 inch wide, 14 gauge stainless steel, attached with concealed stud bolts and sealed to interior partition. Enclosed bases shall be double walled on interior, exposed ends, and at interior exposed partitions. Service access shall be provided for utilities supplying equipment designed to fit atop the counter.

2.3.2 Open Bases

Open bases shall be constructed of 1-5/8 inch outside diameter, 16 gauge stainless steel rails welded 360 degrees to the legs.

2.3.3 Gussets

Gussets shall be stainless steel, fully enclosed, a minimum of 3 inches in diameter at the top, reinforced with a bushing, and shall be continuously welded to channel or angle.

2.3.4 Legs

Legs shall be of 16 gauge, 1-5/8 inch outside diameter stainless steel tubing. Legs shall be continuously welded to gussets, channel, or angle as specified.

2.3.5 Feet

Feet shall be sanitary, die-stamped stainless steel bullet-shaped, fully enclosed and shall provide for a 1 inch adjustment without threads being exposed. The bottom of the legs shall be finished off smoothly and the stem overlapped to provide a sanitary closed fitting. Feet for free-standing fixtures requiring utility connections shall be as above except with a flanged plate at the bottom which shall be anchored to the floor with noncorrosive bolts.

2.3.6 Undercounter Shelving

2.3.6.1 Open Base Shelves

Open base shelves shall be constructed of 16 gauge stainless steel with all edges turned down 1-1/2 inches at 90 degrees with a 3/4 inch tight hem at bottom. Corners shall be notched a full 90 degrees and welded from underside to completely fill the gap, ground and polished. Undershelf shall be braced with 1 inch by 4 inch, 14 gauge stainless steel channel at longitudinal center line and between each intermediate pair of legs.

2.3.6.2 Closed Base Shelves

Interior shelves on closed bases shall be constructed of 16 gauge stainless steel. Side and rear edges of the shelf shall be turned up 2 inches at 90 degrees on a 1/4 inch radius and sealed to the side and rear walls. Vertical and horizontal joints shall be sealed. Front edge shall be turned down 2 inches at 9O degrees with a 3/4 inch tight hem. The vertical seam of shelf turn down/turn up shall be welded to the face of body partition. Shelves shall be reinforced with 1 inch by 4 inch, 14 gauge stainless steel channel.

2.4 DISH COUNTERS

Dish counters shall be constructed and sound deadened as indicated and as specified for counters and sinks. The dish counters shall be fitted and flanged into the dishwashing machine with a water-tight joint.

2.4.1 Dish Counter Support Channels

Dish counter support channels shall be 1 inch by 4 inch by 1 inch, 14 gauge stainless steel. Channels shall be provided under dish counter top between each pair of legs and shall have closed ends. Cross members, on the centerline, shall be provided between legs. Channels shall be stud-bolted to counter top at 6 inches on center, maximum.

2.4.2 Dish Counter Components

2.4.2.1 Prewash Sink

Integral prewash sink shall be 22 inches by 22 inches welded to the dish counter top with the corners rounded on 3/4 inch radius. The sink bottom shall be pitched to 16 gauge stainless steel disposer throat flange . Removable rack support/slide assembly shall be a 22 inch square 16 gauge gauge frame with two cross members. Two 1 inch by 1/8 inch stainless steel angle rack guides shall be welded on top of the frame at 20 inches apart with ends flared at 45 degrees.

2.4.2.2 Prerinse Spray

A prerinse spray assembly shall be mounted on the backsplash of the dish counter with vertical tubing, wall bracket, flexible gooseneck hose, and self closing squeeze-type valve and spray.

2.4.2.3 Undershelves

Undershelves shall be the solid type, and shall be constructed as specified for open base shelves.

2.5 SINKS

Sink shall be of the dimensions indicated and conform to the applicable requirements of NSF 2. Sinks shall be constructed of a minimum of 14 gauge stainless steel. Vertical and horizontal corners shall be rounded to a radius of not less than 3/4 inch with double walls at partitions. Continuous 14 gauge stainless steel exterior filler panels shall be provided between compartments of multiple-compartment sinks and shall be ground and polished to match the adjacent surfaces. The sink bottom shall be scored and sloped to assure drainage to the waste outlet. Sinks shall be equipped with waste and overflow fittings, twist handle drain with quick-opening valves, and faucets of the type specified. Faucet and twist handle drain, and overflow fitting shall be required for each sink compartment, unless otherwise indicated. Spout outlet of faucets shall be a minimum of 5 inches above the rim of the sink. Sink legs shall be as specified for counters, except that closed gussets shall be welded to the support channels. Sinks installed adjacent to walls or enclosures shall be anchored and sealed thereto. Sinks shall be sound-deadened as specified for counters.

2.5.1 Plumbing/Trim Requirements

2.5.1.1 Drain Plug and Overflow Fittings

Drain shall consist of a 1-1/2 inch quick opening brass body valve with side outlet overflow connection with a stainless steel twist lever handle. Removable perforated stainless steel strainer plate shall be not less than 3 inches in diameter. Overflow fittings shall consist of 1-1/4 inch diameter chrome-plated brass tubing of not less than 0.036 inch thickness connected to an overflow head in the back of the sink compartment. Overflow head shall have a removable perforated chrome-plated brass or stainless steel strainer plate of not less than 1-1/2 inch diameter. Overflow head shall be installed in die-stamped opening 1 inch below counter top.

2.5.1.2 Backsplash-Mounted Faucets

Backsplash-mounted faucets shall be combination fitting-type with an exposed body and concealed supply connections at the back of the sink. Fitting shall have a swinging spout of approximately 8 inches in length and inlets with 3/4 inch pipe thread. Faucets shall have adjustable flanges. Valves shall have indexed metal lever handles and replaceable seats.

2.5.1.3 Counter Top or Ledge-Mounted Faucets

Counter top or ledge-mounted faucets shall be combination fitting-type with a concealed body and with the supply connections under the sink ledge or counter top. The faucets shall have replaceable valve seats, swinging spout elevated to clear valve handle, and four-arm or lever-style indexed metal handles. Chrome-plated copper alloy or stainless steel escutcheons

for valves and spout, locknuts and washers or lock-nut type escutcheons together with coupling nuts, and 1/2 inch pipe size union-tailpieces shall be provided.

2.5.2 Pot Washing Sinks

2.5.2.1 Final Rinse Compartment

The final rinse compartment of the pot washing sink shall be equipped with a booster heater for sanitizing.

2.5.2.2 Temperature Gauge

Temperature gauge shall have a 3 inch diameter face with stainless steel flange.

2.5.2.3 Valves, Temperature Gauge, and Controls Mounting

Valves, temperature gauge, and controls shall be installed in a stainless steel recessed panel, ready for final connections. A perforated stainless steel casing shall be provided over the temperature bulb.

2.6 EXHAUST HOODS OVER COOKING EQUIPMENT

Hoods and duct work systems shall conform to ACGIH-2092, NFPA 96, and SMACNA HVAC Duct Const Stds. Hoods shall be U.L. listed per UL 710 and NSF approved. These standards represent only the minimum requirements; subsequent subsections of this clause may require construction that exceeds these minimum requirements. Unless otherwise specified, ducts and hoods shall be secured to building so as to be level and free from vibration under all conditions of operations.

2.6.1 Exhaust Duct

Exhaust duct for canopy or noncanopy hoods shall be constructed of 18 gauge stainless steel and shall have external seams welded continuously, liquid tight. Duct size shall be based on a minimum air velocity of 1500 fpm and maximum of 2500 fpm. Duct shall be continuously welded, liquid tight, to hood duct collar as required by NFPA 96.

2.6.2 Hood Support

Wall mounted or island type hoods shall be supported from the structure with stainless steel mounting brackets provided with hoods. Hanger rods shall be 1/2 inch diameter stainless steel, threaded at the bottom and designed at the top to fit into inserts in building slats above or shall have hanger attachments fastened to structural steel members. Hanger rods shall be spaced 48 inches on center, maximum.

2.6.3 Integral Make-up Air System

Hood shall be provided with an integral make-up air system which automatically replaces the air volume that is exhausted by the hood. The make-up air system shall be in accordance with NFPA 96. Air supplied upstream of the hood suction opening does not qualify as make-up air. The exhaust air flow rate for ventilation of cooking equipment shall be drawn through the open area between cooking surfaces and the perimeter entrance of the hood. Make-up air diffusers shall be provided at the front panel and at the exterior length of the hood producing a low velocity discharge.

The supply air plenum shall have a 1 inch thick foil-faced fiberglass insulation at the interior of the plenum. The temperature differential between the make-up air and the air in the conditioned space shall not exceed 10 degrees F, except for air that is part of the air-conditioning system or air that does not decrease comfort conditions of the occupied space.

2.6.4 Hood Lights and Wiring

Fixtures shall be U.L. Listed, recessed mounted, vapor proof fluorescent fixtures located along the full length of hood. The light fixtures shall be prewired to junction box on top of the hood. Regular or deluxe cool-white T-8 energy efficient fluorescent lamps shall be supplied. Hoods shall be factory prewired and shall have a single connection point. Hoods built in multiple sections shall be furnished with inter-connecting junction boxes for field connection of light fixtures.

2.6.5 Closure Panels

Vertical corner mullions, at removable closure panels, shall be 2 inch by 2 inch wide, 16 gauge stainless steel, and shall be welded integrally to the furring and head channel. Exhaust hood closure panels shall be 1/2 inch pan-formed, 18 gauge stainless steel. Upper edge of panels shall be retained in 1 inch by 2 inch continuous 16 gauge stainless steel head channel secured to the hood superstructure. Lower edge of panels shall be mounted on perimeter furring cap, and shall be turned back 1 inch and flanged up 1 inch for "zee" clip retention.

2.6.6 Hand Held Fire Extinguishers

Hand held fire extinguishers shall be located at each exhaust hood and shall be suitable for gas, electric, and grease fires.

2.6.7 Canopy Hoods

Canopy hoods shall completely cover the cooking equipment. The hood shall overhang the cooking equipment a minimum of 6 inches at each end and 12 inches in front of the equipment. Exhaust air volumes for hoods, wall or double island type, shall be a minimum of 100 cfm per square foot of suction opening, to provide for capture and removal of grease-laden cooking vapors, except when over wood, charcoal, and grease-burning charbroilers, which shall be a minimum of 200 cfm per square foot of suction opening. Test data or performance acceptable to the authority having jurisdiction over both shall be provided and displayed.

2.6.8 Grease Extracting Type Hoods

Grease extracting exhaust hoods shall be pre-engineered, factory fabricated and assembled with built-in washdown systems. Grease extracting exhaust hoods shall be of the size and type as indicated and shall be welded to the exhaust ductwork as required by NFPA 96. Hoods shall have a minimum grease extracting efficiency of 95 percent to be accomplished without the use of filters, cartridges or constant running water.

2.6.8.1 Construction

Construction shall be entirely of stainless steel. Grease extraction chamber and exhaust capture chamber shall be not less than 18 gauge stainless steel. Seams or joints that direct and capture grease laden

vapors shall be continuously welded, with the weld ground and polished to match the adjacent finish where exposed. The vertical joint where the front outside face of the hood meets the end panel of the hood shall be continuously welded, with the weld ground and polished to match the adjacent finish. Joints, seams, extractor chambers, and appendages shall be mechanically sound and sealed grease tight in accordance with the hood manufacturer's listing procedure and NFPA 96. Hoods over 12 feet in length shall be provided in multiple, equal-length sections for mounting end to end; no section shall be less than 6 feet in length. Hoods comprised of multiple sections shall be factory preassembled and provided with predrilled mounting holes and stainless steel fasteners. Welded field joints inside the capture area and exposed to view shall be, ground and polished to match the adjacent finish. Hoods shall be factory preplumbed and prewired and shall have a single connection point. Hoods built in multiple sections shall be furnished with unions and junction boxes for field connections. Grease extracting exhaust hoods shall be of the overhead type suitable for wall mounting . Steel mounting brackets shall be provided by the manufacturer.

2.6.8.2 Automatic Washdown System

Each grease extracting type exhaust hood shall include a built in washdown system consisting of stainless steel wash manifold(s) with brass spray nozzles. The washdown system shall remove accumulations of grease and other cooking process contaminants from the internal hood surfaces using a hot-water and detergent solution. The washdown system shall operate using water at a temperature of not less than 140 degrees F, at a flow pressure of 40.0 psig minimum. A pressure reducing valve, when supply line pressure exceeds 80.0 psig, shall be provided ahead of the hood control panel. The wash water and grease shall be collected within the hood(s), piped to the outside of the hoods, and interconnected to the building plumbing system through an air-gap hub assembly. Main supply water piping shall include a quarter turn ball-type shut-off valve conforming to MSS SP-72 or MSS SP-110 as applicable. As a minimum, a temperature/pressure gauge, water hammer arrester, line strainer, solenoid valve, flow check valve, detergent inlet fitting with check valve, detergent pump, detergent tank, and pump test switch shall be provided with the system. Controls, plumbing, and detergent components shall be located within a factory prewired control enclosure where indicated on the drawings. One control enclosure shall be provided for each exhaust hood or group of hoods served by a common exhaust fan. A vacuum breaker shall be furnished for the hot-water/detergent supply line from the control enclosure to the hood connection point. System operation shall be by a control system, including indicator lights, timing relay adjustable from a minimum of 1 to 10 minutes, control relays and terminal blocks. "START" button shall start the exhaust fan and "STOP" button shall stop the exhaust fan and activate the timed wash cycle. System shall be capable of being activated either manually or thermostatically in the event of a fire.

2.6.8.3 Internal Hood Fire Protection

Grease extracting hoods shall be furnished with piping and nozzles for a fire protection system providing protection of the exhaust hood system, grease extractor, exhaust duct system, and the cooking equipment served by the exhaust hood, per NFPA 96. Exposed piping and fittings shall be chrome-plated or stainless steel sleeved. Each grease extracting hood control panel shall be provided with a manual pull fire switch to activate the automatic washdown system and exhaust fan. Each hood shall be equipped with a full length, stainless steel fire damper located at the air inlet.

In the event that a fire or heat in excess of 286 degrees F in the exhaust duct collars exists, a thermal switch shall automatically close the fire damper, turn on the automatic washdown system and turn off the exhaust and supply fans. The washdown system shall remain on as long as the thermostat is above it's activation temperature and once below that temperature run for an additional five minutes. Fire dampers shall be able to be open with a reset handle without the removal of access panels. Reset handle shall be located not greater than 7 feet above the finished floor. The controls for the hood fire protection system shall be equipped with switches to shut-off fuel-fired and electric-powered cooking equipment served by the hood, when the internal hood fire protection system is activated. The hood fire protection system shall be equipped with normally-open contacts for activating the building fire alarm system.

2.7 CONDENSATE HOODS

Hood and duct work systems shall conform to ACGIH-2092, SMACNA HVAC Duct Const Stds, and NFPA 96. Unless otherwise specified, ducts and hoods shall be secured to building so as to be level and free from vibrations under all conditions of operation. Supply and installation of exhaust fans for food service equipment and exhaust hoods shall be as specified in Section 15895 - AIR SUPPLY DISTRIBUTION, VENTILATION, AND EXHAUST SYSTEM.

2.7.1 Condensate Exhaust Hood Connection Provisions

2.7.1.1 Exhaust Duct for Canopy or Noncanopy Condensate Hoods

Ducts shall be constructed of 18 gauge stainless steel. External seams shall be welded and liquid-tight. Duct size shall be based on a minimum air velocity of 800 fpm. Duct shall be continuously welded, liquid tight, to hood duct collar as required by NFPA 96.

2.7.1.2 Hood Support

Wall mounted hoods shall be supported from the ceiling structure with stainless steel mounting brackets provided with the hoods. Hanger rods shall be 1/2 inch diameter stainless steel, threaded at the bottom and designed at the top to fit into inserts in building slats above or hanger attachments fastened to structural steel members. Hanger rods shall be spaced 48 inches on center, maximum.

2.7.1.3 Closure Panels

Vertical corner mullions shall be provided at removable closure panels, 2 inch wide by 2 inch wide, 16 gauge stainless steel, and shall be welded integrally to furring and head channel. Exhaust hood closure panels shall be 1/2 inchpan-formed 18 gauge stainless steel. The upper edge of the panel shall be retained in a 1 inch by 2 inch continuous 16 gauge stainless steel head channel secured to the hood superstructure. The lower edge of the panels shall be mounted on perimeter furring cap, and shall be turned back 1 inch for "zee" clip retention.

2.7.2 Condensate Exhaust Hoods

Hoods, exposed ducts, and enclosures over the dishwashing machine and the steamer shall be constructed of 18 gauge stainless steel with seams welded, ground, and polished.

2.7.2.1 Condensate Gutter

Hood shall be fabricated so as to form a condensate gutter 3 inches wide by 1 inch high at the perimeter and shall be provided with a condensate drain terminating at a floor sink location.

2.7.2.2 Duct Openings

Duct openings with collars shall be of quantity/size as indicated.

2.8 PREFABRICATED WALK-IN REFRIGERATORS

Refrigerators shall be prefabricated, commercial, walk-in type suitable for the intended use. Mercury shall not be used in thermometers. Units shall conform to UL 207, UL 471, and NSF 7 floor panel design type and size as indicated, and the following:

2.8.1 Miscellaneous Requirements

2.8.1.1 Closure Panels

Closure panels and/or trim strips to the building walls and ceiling shall be installed with concealed attachments. Closure/trim shall be of the same material as the wall panels unless otherwise noted.

2.8.1.2 Identification Signs

Engraved phenolic plastic compartment identification signs 12 inches by 2 inches high in selected color with 1 inch high letters shall be mounted on door above view window.

2.8.1.3 Door

Door panels inner and outer skins shall be of .040 inches patterned aluminum. Doors shall be filled with insulation 4 inches thick, and one per compartment. Hardware shall be brushed chrome plated.

2.8.1.4 Strip Curtains

Transparent flexible vinyl reinforced strip curtains shall be provided which are anchored at top and able to be replaced individually. Strips shall be a minimum of 8 inches in width and .08 inches thick.

2.8.1.5 Door Stops

Door stops shall be provided, where necessary, to prevent walk-in refrigerator doors from striking adjacent walls, plumbing fixtures or food service equipment when door is open.

2.8.1.6 Gasket

Gasket material shall be either natural or synthetic rubber and conform to NSF 2. Where frames are used, the panels shall fit together with gaskets that are designed for 50 percent compression.

2.8.1.7 Alarm System

An alarm system shall be provided consisting of a controller, pilot and warning lights, and audible alarm as specified by the manufacturer. The controller shall be equipped with normally-open and normally-closed

contacts for remote monitoring of the temperature warning alarms and the power-off conditions.

2.8.2 Floor

2.8.2.1 Prefabricated Floor Panels

Prefabricated floor panels shall be of the same construction as wall/ceiling except with 14 gauge galvanized skin, sealed watertight. One hard-alloy aluminum tread plate, 0.100 inch thick, foamed-in-plate. Prefabricated floor panels which are recessed, shall have panels flush with surrounding building floor. Two sets of erection tools, compatible with fasteners, shall be furnished with each unit.

2.8.3 Refrigeration Equipment

Refrigeration equipment for cold storage facilities shall be as specified under this Section.

2.9 ELECTRICAL WORK

Electrical systems, components and accessories shall be certified to be in accordance with NFPA 70, Section 16415 ELECTRICAL WORK INTERIOR, and the following:

2.9.1 Installed Equipment Load

Should the electrical load of the approved equipment differ from that specified or shown on the drawings, the contractor shall provide and install electrical service compatible with the approved equipment.

2.9.2 Electrical Equipment and Components

Food service equipment furnished under this section shall have loads, voltages, and phases compatible with building system, and shall conform to manufacturer standards.

2.9.3 Cords and Caps

Food service equipment cord/caps shall be coordinated with related receptacles. All 120/208/240 volt "plug-in" equipment shall have Type SO or SJO cord and a plug with ground, fastened to frame/body of item. Mobile equipment shall have a strain-relief assembly at the cord connection of the appliance. Mobile electrical support equipment (heated cabinets, dish carts, etc.) and counter appliances mounted on mobile stands (mixers, food cutter, toaster, coffee makers, microwave ovens, etc.) shall have cord/cap assembly with cord-hanger as provided by the manufacturer.

2.9.4 Switches and Controls

Each motor-driven appliance or electrically-heated unit shall be equipped with control switch and overload protection per UL 197 and UL 471. Switches, controls, control transformers, starters, equipment protection and enclosures shall be Industry standards for the equipment environment.

2.9.5 Motors

Motors at 120, 240, and 208/240 volts shall have starter with overload protection and short circuit motor protection per manufacturer standards.

2.9.6 Heating Elements

Electrically-heated equipment shall have thermostatic controls. Water heating equipment shall be equipped with a positive low-water shut-off.

2.9.7 Receptacles and Switches

Receptacles which are located in vertical panels of closed base bodies shall be installed in 12 inch by 8-1/2 inch by 3 inch deep recessed mounting panel sloped on a 60-degree angle and turned up to the top of the opening. Receptacles which are located in closed base fixtures shall be prewired to a junction box located within 6 inches from the bottom of the utility compartment. Receptacles which are installed in/on fabricated equipment shall be horizontally-mounted in a metal box with a stainless steel cover plate.

2.9.8 Light Fixtures

Light fixtures with lamps which are installed in/on fabricated or field-assembled equipment shall be prewired to a junction box for final connection (fixtures shall be continuous run when indicated). Fluorescent display light shall be installed the full-length of the display stand and serving shelf with stud bolts or as indicated, and shall be prewired through a support post to a recess-mounted switch. Heat lamps shall be installed to underside of serving shelf assemblies as specified. Heat lamp length for chassis shall be sized per manufacturer or as indicated on the drawings. Cold storage light fixtures shall be electrically connected through the hub fitting located on the top of the fixture. Horizontal conduit shall be above the ceiling panels. Plastic sleeves shall be installed through ceiling panels for electrical conduit and the penetrations shall be sealed airtight at both sides of panel.

2.9.9 Final Electrical Connection Provisions

Final electrical connection points of equipment shall be tagged with item number, name of devices on the circuit, total electrical load, voltage, and phase. Fabricated equipment containing electrically-operated components or fittings, indicated on utility connections drawings to be direct-connected, shall have each component, fitting, or group thereof prewired to a junction box for final connection. Refer to the drawings for circuit loading. Field-assembled equipment (example, prefabricated cold storage assemblies, conveyor systems, exhaust hoods) shall have electrical components completely interconnected by this section for final connection as indicated on utility connection drawing. The following groups of cold storage assembly electrical devices shall be prewired to a top-mounted junction box for final connection per compartment grouping, unless otherwise indicated.

a. Light fixtures, switches, and heated pressure-relief vent.

b. Door/jamb heater and temperature monitors/alarms.

c. Evaporator fans, defrost elements, freezer fan door switch, and drain line heaters.

2.9.10 Lamps

Food service equipment containing light fixtures shall have standard appliance type bulbs or energy efficient appliance type bulbs as indicated

on the drawings. Exposed fluorescent lamps above or within a food zone shall have plastic coated T-8 energy efficient lamps or standard lamps, sleeved in plastic tube with end caps.

2.10 COLOR

Color shall be as indicated on the Architectural Drawings.

PART 3 EXECUTION

3.1 INSTALLATION

Equipment shall be installed at locations shown in accordance with NSF-01 and the manufacturer's written instructions. The Contractor shall make provision for the plumbing, heating, and electrical connections and for equipment indicated as being furnished and installed by the Government.

3.1.1 Equipment Connections

Equipment connections shall be complete for all utilities. Unless otherwise specified, exposed piping shall be chromium-plated copper alloy

3.1.2 Backflow Preventers

Backflow preventers shall be furnished as specified in Section 15400 PLUMBING, GENERAL PURPOSE. The Contractor is responsible to install backflow preventers as shown on the contract drawings and at all other locations necessary to preclude a cross-connect or interconnect between a potable water supply and any source of nonpotable water, or other contaminant. Backflow preventers shall be installed at all locations where the potable water outlet is below the flood level of the equipment, or will be located below the level of the contaminant. Backflow preventers shall be provided of sufficient size to allow unrestricted flow of water to the equipment, and preclude the backflow of waste or other contamination into the potable water system.

3.1.3 Gas Equipment

Installation of equipment shall conform to NFPA 54. A heavy duty steel cable, 3 inches to 6 inches shorter than the equipment connector shall be fastened to the equipment and the walls.

3.1.4 Plumbing Work

Plumbing final connection points of equipment shall be tagged, indicating item number, name of devices or components, and type of utility (water, gas, steam, drain). Extensions of indirect waste fitting shall be provided to open-sight hub drain, floor sink or floor drains from food service equipment.

3.2 CONSTRUCTION OF FABRICATED EQUIPMENT

3.2.1 Grinding, Polishing, and Finishing

Exposed welded joints shall be ground smooth and finished to match the adjoining material. Wherever materials have been depressed or sunken by welding operation, such depressions shall be hammered and peened flush with the adjoining surface, and again ground to eliminate high spots. Ground surfaces shall then be polished or buffed to match adjoining surfaces.

Care shall be exercised in the grinding operations to avoid excessive heating of the metal and metal discoloration. Abrasives, wheels, and belts used in grinding shall be free of iron and shall not have been used on carbon steel. In all cases, the grain of rough grinding shall be removed by several successively finer polishing operations. The texture of the final polishing operation shall be uniform, smooth, and consistent. The grain direction of horizontal stainless steel surface shall be longitudinal, including the splash back. Polishing at right angle corners shall provide a mitered appearance. Butt and contact joints shall be close fitting and not require solder as a filler. Wherever brake bends occur, the bends shall be free of open texture or orange peel appearance. Where brake work does mar the uniform appearance of the material, such marks shall be removed by grinding, polishing, and finishing. Sheared edges shall be free of burrs, projections, and fins. Where miters or bullnosed corners occur, such miters and corners shall be finished with the underage of the material and ground to a uniform condition. Overlapping of material is not acceptable. Exposed stainless steel surfaces shall have a No. 3 or 4 finish. Finishes of materials, other than stainless steel, shall be comparable in appearance to commercial mill finish. Exposed surfaces shall include:

a. Exterior surfaces exposed to view.

b. Interior surfaces exposed to view in doorless cabinets.

c. Undersides of shelves shall have a ground finish of No. 90 grit or finer.

3.2.2 Fastening Devices

Fastening devices shall be of the same material as the metal being joined when joint pieces are of similar metal. Fastening devices shall be stainless steel when stainless steel is joined to dissimilar metal. Stud bolts shall be a minimum of 1/4-20 stainless steel with length necessary to accept washers, and required nuts, and shall be welded 9 inches on center maximum. Exposed surfaces of equipment shall be free of bolts, screws, and rivet heads. Stainless steel stud bolts shall be used to fasten tops of counters or tables to angle framing and trim to other surfaces. Such bolts shall be of the concealed type. Threads of stud bolts which are on the inside of fixtures and are either visible or might come in contact with a wiping cloth, shall be capped with chrome plated washers, lock washers, and chromium-plated brass cap nuts. Wherever bolts are welded to the underside of trim or tops, the reverse side of the welds shall be finished uniform with the adjoining surface of the trim or the top. Dimples at these points will not be acceptable.

3.2.3 Welding

3.2.3.1 Welding Rods

Welding shall be done with welding rods of the same composition as the sheets or parts welded.

3.2.3.2 Weld Quality

Welds shall be strong and ductile. Welds shall be free of imperfections such as pits, runs, spatter, cracks, low spots, voids, and shall be finished to have the same color as the adjoining surfaces. Butt welds made by welding straps under seams, or by filling in with solder, or by grinding

will not be acceptable. Welded joints shall be homogeneous with the sheet metal. Spot welding shall not be substituted for continuous welding. Joints in tops of counters, tables, drainboards, exposed shelving, and sinks shall be joined by heli-arc welding or a process other than carbon-arc welding or one that will permit carbon pick-up. Joints shall be fully welded. Counter tops shall be factory welded into lengths as long as practical in order to reduce field welded joints to a minimum. Exposed welds shall be ground smooth, flush with adjacent surface and free of burrs and sharp edges. Wherever welds occur on nonfood contact surfaces not suitable for grinding or polishing, such welds and the accompanying discoloration shall be sandblasted and coated in the factory with a nontoxic metallic-base paint. Bolts and screws shall be welded by a process that will minimize the possibility of carbide precipitation. Welds in galvanized steel made after galvanizing, and the adjacent areas where galvanizing is damaged, shall be cleaned and coated with galvanizing repair compound.

3.2.4 Brazing

Brazing shall be accomplished with brazing material. Brazing shall be used only on copper tubing to brass and bronze connection fittings.

3.3 TESTING

Equipment shall be inspected and tested under operating conditions after installation. If inspection or test shows defects, such defects shall be corrected, and inspection and test shall be repeated. Refrigerator tests shall include the following:

3.3.1 Performance Tests

A detail written test procedure shall be submitted prior to performance of tests. The Contractor shall furnish all instruments, test equipment, and personnel required for the tests; Government will furnish the necessary water and electricity for the installed equipment. Evidence shall be submitted that the instruments have been properly calibrated by an independent laboratory at the Contractor's expense.

3.3.2 Operating Tests

An operating test shall be performed on all items after complete installation and adjustment. The failed test item shall be corrected and the test shall be rerun.

3.3.3 Clean and Adjust

Debris resulting from this work, as the installation progresses, shall be removed from the jobsite. All food service equipment, prior to demonstration, shall be cleaned and polished, both interior/exterior. Drawer slides and casters shall be lubricated and adjusted. Pressure regulating valves, timed-delay relays, thermostatic controls, temperature sensors, and exhaust hood grilles shall be adjusted, as required, for proper operation. Faucet aerators and line strainers shall be cleaned or replaced. Damage to painted finishes shall be touched up.

3.3.4 Equipment Start-Up/Demonstration

The Contractor shall obtain the services of the manufacturer's representative experienced in the installation, adjustment and operation of

the equipment specified. The representative shall supervise the start-up, adjustment, and testing of the equipment, prior to the demonstration. Equipment shall be carefully tested, adjusted, and regulated in accordance with the manufacturer's instructions and shall be so certified in writing. A thorough operational demonstration shall be provided of all equipment and instructions furnished for general and specific care and maintenance. Selected items of equipment and attendees shall be scheduled, with the Contracting Officer, at least 2 weeks in advance of demonstration periods.

PART 4 ITEM SPECIFICATION

4.1 Two Stack Convection Oven (Existing)

Government Furnished, Contractor Installed.

4.2 Flat Top Grille (Existing)

Government Furnished, Contractor Installed.

4.3 Char-Broiler Grille (Existing)

Government Furnished, Contractor Installed.

4.4 Pass Thru Window Warmer (Existing)

Government Furnished, Contractor Installed.

4.5 Counter With Food Warmer

Contractor Furnished, Contractor Installed.

Counter with food warmer shall be fabricated in the size, shape and arrangement as indicated on the plan and elevation, measuring overall approximately 16'-0" long x 2'-8" wide x 3'-0" high. The counter shall be constructed in accordance with elevation #F/KA-107 and detail #4/KA-108. The top shall be constructed of 14 gauge stainless steel with the rear edge formed up into a 6" high x 1-1/2" wide back splash. The front and both ends shall be formed down 2" square.

Mounted into the top as indicated on the plan, shall be a two section hot food warmer. Each stainless steel lined hot food well shall accommodate a 12" x 20" x 6" deep inset pan or divisional pans thereof. The hot food warmer shall be suitable for wet or dry operation. The hot food warmer shall be wired 208/60/1 phase for direct connection. The exterior body of the hot food warmer shall be enclosed with galvanized steel. The hot food warmer shall be furnished with stainless steel mounting frame and a separate front mounted control panel with sealing gasket. The control knobs are enclosed in a one-piece, die-stamped, front mounted control panel. The control panel shall be mounted in the stainless steel front apron of the fixture. Each warmer section shall have 1" fiberglass insulation surrounding all four sides and bottom. Each food warmer section shall be controlled by an individual infinite control with positive-off position and shall have a red signal light to indicate a power-on condition. Each well shall have an upper temperature-limit thermostat which will prevent accidental overheating. Each well shall be equipped with a 1" drain towards the front of the counter with drain manifold to the right end for a single drain connection complete with a 1" gate valve. The drain shall be extended

to the floor drain below for an air gap connection. The control panel and the drain manifold are to be located to the front of the fixture. The hot food warmer shall be Underwriters Laboratory, Inc. listed and meet the standards of the National Sanitation Foundation. The hot food warmer shall be furnished with a one year warranty against defects covering parts and labor.

The top of the counter shall be mounted on an open tube base with a full length stainless steel undershelf. The area of the base surrounding the two section hot food warmer shall be equipped with an 11" high 18 gauge stainless steel apron on all four sides. The controls for the hot food unit shall be recessed in the front of the apron. The area below the hot food warmer at the bottom of the apron shall be enclosed with two easily removable galvanized closure panels to avoid contact with the elevated temperature of the bottom of the hot food warmer.

The entire counter shall be constructed in accordance with the other parts of this section of these specifications.

4.6 3 Basket Fryer (Existing)

Government Furnished, Contractor Installed.

4.7 Table

Government Furnished, Government Installed.

4.8 Steamer (Existing)

Government Furnished, Contractor Installed.

4.9 Steam Pot (Existing)

Government Furnished, Contractor Installed.

4.10 Warming Cabinet

Government Furnished, Government Installed.

4.11 Prep Tables (Existing)

Government Furnished, Government Installed.

4.12 Upright Freezer

Government Furnished, Government Installed.

4.13 Slicing Machine (Existing

Government Furnished, Government Installed.

4.14 Meat Cutter (Existing)

Government Furnished, Government Installed.

4.15 Soda Machines

Government Furnished, Government Installed.

4.16 St. Steel Service Counter

Contractor Furnished, Contractor Installed.

Stainless steel service counter shall be fabricated in the size, shape and arrangement as indicated on the plan and elevation, measuring overall approximately 29'-9" long x 2'-1" wide x 3'-6" high to serving level. The counter shall be constructed in accordance with elevation #D/KA-107 and #E/KA-107 and detail #2/KA-108. The top shall be constructed as one-piece 14 gauge stainless steel with the front and rear edges formed in accordance with the above referenced detail. The ends of the counter shall abut and be sealed to the tiled end walls.

The top shall be mounted on a semi-enclosed stainless steel base, enclosed on the ends and on the customer side as indicated on the above referenced detail. The balance of the base shall be supported on stainless steel tubular legs with a bottom and intermediate stainless steel undershelf. The legs shall be secured to the floor.

The front side, or the customers side of the counter, shall be finished with ceramic tile on plywood backing mounted on a wood frame and attached to the rear stainless steel panel of the counter, all as indicated on the detail #2/KA-108.

Furnished with this counter as indicated on the elevation #E/KA-107 shall be a total of three disposable cup holders. Each holder shall be constructed of type 302 stainless steel and shall measure overall approximately 8-1/8" wide x 23-1/8" high x 23" deep. Each holder shall house three horizontally mounted spring loaded cup tubes to dispense paper, plastic or foam cups. Each cup tube shall be adjustable to accommodate 8 oz to 44 oz. cups with each tube sized to the owners choice of cup type and size. Each tube shall have a type 304 stainless steel front plate with stainless steel bezel and with quick release mounting brackets to allow removal for adjustment or cleaning. Each cup dispenser shall be NSF listed. Each tube shall be adjusted by the contractor for the owner cups. The disposable cup holders shall be equipped with small rubber feet and shall otherwise be in accordance with the manufacturer's standard specifications.

The entire counter shall be constructed in accordance with the other parts of this section of these specifications.

4.17 3 Door Refrigerator (Existing)

Government Furnished, Government Installed.

4.18 Ice Machine

Contractor Furnished, Contractor Installed.

Ice machine shall consist of an air cooled ice cube maker mounted on a storage bin. The ice cube maker shall be wired 120/60/1 phase. The ice maker shall be constructed with a stainless steel and plastic exterior and a poly clad steel interior. The maker shall be certified in accordance with ARI Automatic Commercial Ice Cube Machines Certification Standard 810 to produce 380 pounds of small cubes in 24 hours. The rhomboid shaped cube shall measure approximately 3/8" x 1-1/8" x 7/8" with a count of approximately 96 per pound. The maker shall measure approximately 22" wide x 24-1/2" deep x 26-1/2" high. The maker shall be mounted on a bin capable

of holding 430 pounds of ice and shall be constructed with a stainless steel and plastic exterior and a polyethylene interior liner. The bin shall measure approximately 30" wide x 34" deep x 50" high including 6" high adjustable legs. The sloped plastic hinged bin lid shall have a hold open feature. The interior of the bin shall have a built in ice scoop holder to keep the scoop out of the ice. The ice machine shall be NSF approved and UL listed. The ice machine shall be furnished with the manufacturer's standard warranty. The ice maker and the ice bin shall otherwise be in accordance with the manufacturer's standard specifications.

4.19 2 Compartment Sink

Contractor Furnished, Contractor Installed.

The 2 compartment sink shall be fabricated in the size, shape and arrangement as indicated on the plan, measuring overall approximately 5'-0" long x 2'-3" wide x 2'-10" high to working level. The top and sink compartments shall be constructed of one-piece 14 gauge stainless steel with the rear and right end edges formed up into an 8" high back splash with the ends welded closed. The front and right end edges shall be formed into a 2" square turn down.

Each sink compartment shall measure approximately 16" wide x 20" front to back x 10" deep. The sink compartment on the left shall be equipped with a twist handle drain. The drain handle shall be held in place with a 14 gauge bracket stud bolted to the underside of the sink. The drain shall have a connected rear overflow.

The sink compartment on the right shall be equipped with a 1 H.P. commercial food waste disposer wired 208/60/3 phase. The disposer shall be equipped with a 3-1/2" diameter top mounting assembly for fitting to the sink drain opening. The disposer shall have a 3/4" rubber mounting above the grinding chamber. The mounting shall be enclosed in chrome plated covers for sanitation. The disposer shall have a corrosion resistant stainless steel grind chamber with stationary and rotating shredding elements made from cast nickel chrome alloy for long life and corrosion resistance, designed for reverse action grinding. The motor shall be 1 H.P. totally enclosed with built-in thermal overload protection. Controlled power air flow shall cool the motor. Motor shall have triple lip seal for protection from water damage and secondary spring-loaded oil seal for protection against water and loss of grease. The disposer shall have stainless and chrome plated housing. The disposer shall be equipped with a magnetic starter with a NEMA 4 water-tight stainless steel enclosure and start/stop buttons in the face. The magnetic starter shall be mounted on a 14 gauge stainless steel bracket secured in a rigid manner to the underside of the drain board on the right of the sink unit. The face of the switch shall be recessed 2" back from the body of the sink. The water inlet in the cutting chamber of the disposer shall be connected through the solenoid valve. The disposer shall be equipped with the manufacturer's standard equipment and shall otherwise be in accordance with this manufacturer's standard specifications.

Mounted to the back splash and centered over the sink partition shall be a chrome plated combination hot and cold water faucet. Faucet shall be equipped with an 8" swing spout and aerator and shall have lever type handles.

The top and sink compartments shall be mounted on an open tube stainless steel base with stainless steel gussets, legs and rails. The area below the

left drain board shall be equipped with a stainless steel undershelf. The entire counter shall be constructed in accordance with the other parts of this section of these specifications.

4.20 Non Carb. Drink Machine (Existing)

Government Furnished, Government Installed.

4.21 Sink with Drainboard

Contractor Furnished, Contractor Installed.

The sink with drain board shall be fabricated in the size, shape and arrangement as indicated on the plan, measuring overall approximately 4'-0" long x 2'-3" wide x 2'-10" high to working level. The top and sink compartment shall be constructed of one-piece 14 gauge stainless steel with the rear edge formed up into a 6" high back splash with the ends welded closed. The front and ends shall be formed up approximately 3" and terminated in a 1-1/2" rolled rim.

The sink compartment shall measure approximately 16" wide x 20" front to back x 10" deep. The sink compartment shall be equipped with a twist handle drain. The drain handle shall be held in place with a 14 gauge bracket stud bolted to the underside of the sink. The drain shall have a connected rear overflow.

Mounted to the back splash and centered over the sink shall be a chrome plated combination hot and cold water faucet. Faucet shall be equipped with an 8" swing spout and aerator and shall have lever type handles.

The top and sink compartment shall be mounted on an open tube stainless steel base with stainless steel gussets, legs and rails. The entire counter shall be constructed in accordance with the other parts of this section of these specifications.

4.22 Tables

Government Furnished, Government Installed.

4.23 Cash Registers (Existing)

Government Furnished, Government Installed.

4.24 Upright Refrig. Glass Doors (Existing)

Government Furnished, Government Installed.

4.25 Soft Serve Ice Cream (Existing)

Government Furnished, Government Installed.

4.26 Coffee/Cappuccino Machine (Existing)

Government Furnished, Government Installed.

4.27 38" Thin Line Wall Monitor

Government Furnished, Government Installed.

4.28 St. Steel Pass Thru Frame

Contractor Furnished, Contractor Installed.

The stainless steel pass thru frame shall be custom fabricated in the size, shape and arrangement as indicated on the plan, elevations #F/KA-107 and #G/KA-107 and Detail #5/KA-108. The frame shall be constructed of 18 gauge stainless steel and shall completely cover the opening in the wall. The frame shall be a telescope type and shall extend across the head, down both jambs and across the sill. All edges of the frame shall be formed out against the face of the wall on both sides of the wall 2" with hug edges. The telescope parts of the frame shall be of all welded construction. The frame shall be sized to accommodate Item #4 above. Furnished with this frame shall be 14 gauge stainless steel angle brackets of an approved design to be mounted on the hot food production side of the wall to hold Item #4 in place. The entire frame and brackets shall be constructed in accordance with the other parts of this section of these specifications.

4.29 Trash Containers

Government Furnished, Government Installed.

4.30 Sandwich Bar

Government Furnished, Government Installed.

4.31 Salad Bar

Government Furnished, Government Installed.

4.32 3 Compartment Sink

Contractor Furnished, Contractor Installed.

The 3 compartment sink shall be fabricated in the size, shape and arrangement as indicated on the plan, measuring overall approximately 9'-0" long x 2'-6" wide x 2'-10" high to working level. The top and sink compartments shall be constructed of one-piece 14 gauge stainless steel with the rear and left end edges formed up into a 10" high back splash with the ends welded closed. The front and right end edges shall be formed up approximately 3" and terminated in a 1-1/2" rolled rim.

Each sink compartment shall measure approximately 18" wide x 20" front to back x 14" deep. The two sink compartments on the left shall have center drain openings and shall be equipped with twist handle drains. The sink compartment on the right shall have the drain off-set to accommodate the sink heater and shall also be equipped with a twist handle drain. The drain handles shall be held in place with 14 gauge brackets stud bolted to the underside of the sink compartments. The drains shall have connected rear overflows.

Heater shall be an electric sink heater measuring 8" wide x 17-1/8" front to back x 12-5/8" high. Sink heater shall have a dual reservoir system, one for heating the water and one for trapping and collecting soil from the sink compartment. Sink heater shall have a 2" diameter inlet and outlet on the top, a reservoir drain, fiberglass insulation and a stainless steel front panel, body and base. Sink heater shall be mounted to the underside of the sanitizing sink compartment in accordance with the manufacturer's recommendations. Sink heater shall have a 6.0 K.W. element wired 208/60/3

phase and the load shall be balanced on all three phases. Heating element shall be metal sheathed and controlled by a close tolerance immersion thermostat. The sink heater shall be protected with a high temperature limit switch and low water cut-off. Sink heater shall have an on-off switch, pilot light, low water indicator light and rinse temperature gauge. The sink heater shall be equipped with the manufacturer's standard equipment and shall otherwise be in accordance with this manufacturer's standard specifications.

Mounted to the underside of the right hand drain board of the sink unit shall be an electric booster heater. Booster heater shall measure 18" wide x 24" front to back x 12" high. Booster heater shall have a six gallon tank, fiberglass insulation and shall have a stainless steel front panel, body and base. The booster heater, which shall be mounted to the underside of the right drain board, shall be without legs and shall be mounted on angle slide brackets. Booster heater shall have 30.0 kilowatt elements wired 208/60/3 phase and shall have the capacity to heat 301 gallons per hour of water from 140 F. to 180 F. Heating elements shall be metal sheathed, controlled by close tolerance immersion thermostats. Booster heater shall be protected with a high temperature limit switch and low water cut-off. Booster heater shall also be furnished with temperature/pressure relief valve, pressure reducing valve, two temperature/pressure gauges, shock absorber, pilot light and on-off switch. Booster heater shall be furnished with all standard equipment and shall otherwise be in accordance with the manufacturer's standard specifications.

Mounted to the back splash over the third sink compartment on the right shall be a single chrome plated faucet with a 3-7/8" fixed spout. The faucet inlet shall be connected from the booster outlet. Faucet shall have a heat resistant handle to withstand 180 F hot water. The handle shall be a four prong black handle of polypropylene material with a red H.W. index button. Mounted to the back splash of the sink unit shall be a plaque for 180 F hot water that reads "DANGER, EXTREME HOT WATER".

Mounted to the back splash and centered over the sink partitions shall be chrome plated combination hot and cold water faucets. Faucets shall be equipped with an 8" swing spout and aerator and shall have lever type handles.

The top and sink compartments shall be mounted on an open tube stainless steel base with stainless steel gussets, legs and rails. The end of the right hand drain board shall be equipped with a leg set to support the booster heater. The area below the left drain board shall be equipped with a stainless steel undershelf. The entire counter shall be constructed in accordance with the other parts of this section of these specifications.

4.33 Dishwasher

Contractor Furnished, Contractor Installed.

Dishwasher shall be a corner type, fully automatic rack type, high temperature single tank machine with built-in booster heater. The machine shall be wired 208/60/3 phase. Dishwasher shall have a capacity of at least 55 racks per hour with a maximum rinse consumption of 1.2 gallons per rack. Dishwasher shall measure 24" x 26" x 70" high. Wash tank and chamber shall be constructed of 16 gauge type 304 stainless steel. All internal castings shall be non-corrosive lead free nickel alloy or bronze. Dishwasher shall have stainless steel frame, legs and feet. Dishwasher shall have coupled slide up counter-balanced doors on two sides at right angles for corner

operation complete with door safety switch. The drain shall be a door activated closer. Dishwasher shall have wash and rinse spray systems made of 18-8, type 304 stainless steel. The upper and lower wash and rinse spray assemblies shall be removable without the use of tools.

Dishwasher shall have a 1 H.P. motor, standard frame, horizontal C-faced, drip proof, squirrel-cage, induction run type, internally cooled with ball-bearing construction. Pump shall be a centrifugal type packless pump with brass petcock drain. Pump shall have ceramic seal and a balanced cast impeller on a precision ground stainless steel shaft. Dishwasher shall have a 3.0 K.W. electric immersion heating element for tank heat. Dishwasher shall have a built-in 13.5 K.W. electric booster heater to boost 140 F hot water to 180 F for final rinse.

Motor and tank heat shall be wired to a single electrical connection point in a top mounted NEMA-12 rated control cabinet. Control panel shall house the motor controls and overload protection, transformer, contactors and all dishwasher integral controls. All controls safe low voltage 24 VAC. Furnished with the dishwasher shall be three plate type racks and three flat silver type racks. Dishwasher shall be furnished with all standard equipment and shall otherwise be in accordance with the manufacturer's standard specifications.

4.34 Tray Carts (Existing)

Government Furnished, Government Installed.

4.35 Storage Shelves

Government Furnished, Contractor Installed.

4.36 Soda Dispensing Containers

Government Furnished, Government Installed.

4.37 Portable Shelf

Government Furnished, Government Installed.

4.38 Portable Weight Table

Government Furnished, Government Installed.

4.39 Soiled and Clean Dish Tables

Contractor Furnished, Contractor Installed.

The soiled dish table shall measure approximately 5'-0" long x 2'-6" wide x 2'-10" high at the connection to the dishwasher. The top shall be constructed of one piece 14 gauge stainless steel with the rear and right end edges formed up into an 8" high back splash with the right end welded closed. The back splash shall be mitered into the dishwasher opening on the left end with the balance of the left end formed down and secured to the dishwasher in a water tight manner. The front of the table shall be formed up into a 3" high x 1-1/2" rolled rim.

Welded integrally into the top shall be a 22" x 22" x 6" deep pre-rinse sink. The bottom of the sink shall be scored and pitched to an opening for the disposer collar. The disposer shall be a 2 H.P. commercial food waste

disposer wired 208/60/3 phase. The disposer shall be equipped with a 6-5/8" diameter top mounting assembly with splash baffle and stopper for fitting to the sink drain opening. The disposer shall have a 3/4" rubber mounting above the grinding chamber. The mounting shall be enclosed in chrome plated covers for sanitation. The disposer shall have a corrosion resistant stainless steel grind chamber with stationary and rotating shredding elements made from cast nickel chrome alloy for long life and corrosion resistance, designed for reverse action grinding. The motor shall be 2 H.P. totally enclosed with built-in thermal overload protection. Controlled power air flow shall cool the motor. Motor shall have triple lip seal for protection from water damage and secondary spring-loaded oil seal for protection against water and loss of grease. The disposer shall have stainless and chrome plated housing. The disposer shall be equipped with a magnetic starter with a NEMA 4 water-tight stainless steel enclosure and start/stop buttons in the face. The magnetic starter shall be mounted on a 14 gauge stainless steel bracket secured in a rigid manner to the underside of the drain board on the right of the sink unit. The face of the switch shall be recessed 2" back from the body of the sink. The water inlet in the cutting chamber of the disposer shall be connected through the solenoid valve. The disposer shall be equipped with the manufacturer's standard equipment and shall otherwise be in accordance with this manufacturer's standard specifications.

Pre-rinse faucet shall be mounted to the back splash above the pre-rinse sink complete with wall bracket. Faucet shall have 1/2" IPS female inlets spaced 8" on center. Faucet shall have internal check valves and shall have stainless steel seats and swiveling seat disks. Faucet shall have a 3/8" IPS female outlet with a 18" long vertical riser. Connected to the riser shall be a hose with a stainless steel sheath, an insulated handle, and a spray valve. Pre-rinse unit shall have a coil spring and a hook to hold the spray valve in position. Faucet shall be in accordance with the manufacturer's standard specifications.

The top shall be mounted on an open tube base with the leg set at the right end secured to the floor.

The clean dish table shall measure approximately 4'-0" long x 2'-6" wide x 2'-10" high at the connection to the dishwasher. The top shall be constructed of one piece 14 gauge stainless steel with the rear edge formed up into an 8" high back splash with the right end returned to the dishwasher with an 8" high single thickness splash on a 90 degree angle. A portion of the right end of the clean dish table shall be formed down into the dishwasher and secured to the dishwasher in a watertight manner. The front and left end edges of the table shall be formed up into a 3" high x 1-1/2" rolled rim.

The top shall be mounted on an open tube base complete with a stainless steel undershelf. The entire set of counters shall be constructed in accordance with the other parts of this section of these specifications.

4.40 Condensate Hood

Contractor Furnished, Contractor Installed.

The condensate hood shall be mounted over the dishwasher, Item #33 as indicated on the plan, measuring overall approximately 3'-6" x 3'-6" x 2'-0" high. The condensate hood shall exhaust 750 cfm with a duct collar size of 10" x 6". The condensate hood shall be constructed of 18 gauge type 304 stainless steel with a #4 finish. The interior of the hood shall be

equipped with a baffle for collecting condensed moisture from the hood. The hood shall have a 3" wide perimeter gutter with a 1/2" drain stub out of the rear corner nearest the floor drain. The drain shall be extended to the floor drain with a chrome pipe for an air gap connection. The hood shall have two full length hanging brackets with holes pre-punched on 6" centers. The hood shall be supported from the building structure with 1/2" diameter stainless steel threaded hanger rods. The hood shall be secured and sealed to the wall on two sides. Stainless steel closure panels shall be provided and installed to close the top of the hood to the finished building ceiling. Condensate hood shall be constructed in accordance with paragraph 2.7 of these specifications.

4.41 Condensate Hood

Contractor Furnished, Contractor Installed.

The condensate hood shall be constructed the same as the hood specified under Item #40, except the size of this hood shall be approximately 4'-0" long x 3'-6" front to back x 2'-0" deep. This hood shall be mounted over Items #8 and #9 as indicated on the plan.

4.42 3 Door Refrigerator (Existing)

Government Furnished, Government Installed.

4.43 Freezer (Existing)

Government Furnished, Government Installed.

4.44 Cashier W/Table (Existing)

Government Furnished, Government Installed.

4.45 Prep Tables (Existing)

Government Furnished, Government Installed.

4.46 Sandwich Wrap Machine (Existing)

Government Furnished, Government Installed.

4.47 Counter W/Sink (Existing)

Government Furnished, Contractor Installed.

4.48 Coffee Machine (Existing)

Government Furnished, Government Installed.

4.49 Storage Rack (Existing)

Government Furnished, Government Installed.

4.50 Prep Table W/Shelf (Existing)

Government Furnished, Government Installed.

4.51 Menu Board

Government Furnished, Government Installed.

4.52 Walk-In Refrigerator/Freezer

Contractor Furnished, Contractor Installed.

Walk-in shall consist of a freezer compartment and a refrigerator compartment. Walk-in shall be a prefabricated metal clad polyurethane insulated walk-in in the size, shape and arrangement as shown on the plan measuring overall approximately 15'-5" wide x 13'-6" deep x 8'-8" high. Walk-in shall be equipped with a floor and shall be mounted in a 4-1/2" deep pit, sized to the walk-in. Floor panels shall be shimmed leveled and sealed to the building floor around the pit.

This walk-in shall be constructed in accordance with the Underwriters Laboratories and the National Sanitation Foundation standards and shall bear their seals. Walk-in shall be built with 4" thick prefabricated sections. Panels shall consist of precision roll formed inner and outer metal pans separated by foamed-in-place rigid urethane insulation. Panels shall have foamed-in-place double tongue and groove edges which are the same density as the rest of the panel. Panels shall have flexible vinyl gaskets on the interior and exterior perimeter of each panel. Panel edges shall have a minimum of three cam type locking assemblies foamed-in-place at time of fabrication. Cam locks shall be actuated from the interior of the walk-in and the wrench holes shall be furnished with stainless steel plugs. Each panel shall be completely filled with foamed-in-place urethane insulation and shall be tested for voids before leaving the factory. Insulation shall have a flame spread rating of 25 or less in accordance with ASTM E-84 and shall be certified with a UL label. The "K" factor shall be 0.135 BTU per hour, the "U" factor shall not exceed 0.033 and the "R" factor shall have a value of R30.0. Insulation shall have a 98% closed cell structure and an average in-place density of 2.25 lbs. per cubic foot.

The insulated walk-in floor shall be 4-1/4" thick and of the same construction with foamed-in-place rigid urethane foam as the wall and ceiling panels. The panels shall have double tongue and groove joints between the adjoining floor panels and the wall panels. The exterior floor skin shall be 24 gauge galvanized steel with galvalume plus finish. The interior floor panels shall be .100" thick aluminum diamond tread foamed-in-place. The floor shall be constructed to withstand a uniformly distributed load of 750 lbs. per square foot.

The interior walls and ceiling and the exposed exterior walls shall be 0.40" stucco aluminum. All unexposed exterior walls, exterior top and exterior bottom shall be 24 gauge galvanized steel with a galvalume plus finish. The exposed exterior front and a portion of the right side shall be fitted with 36" high 1/8" thick diamond tread wainscot. The wainscot shall be secured to the walk-in with stainless steel screws and sealed at the top to the walk-in walls and at the bottom to the building floor.

Each walk-in compartment shall be provided with a flush entrance door located and hinged as shown on drawing. Each door opening shall measure 34" wide x 79" high with both the interior and exterior of each door fully covered with 0.40" stucco aluminum. The front and rear sides of each door as well as the front and rear sides of the door frame shall be equipped with 36" high 1/8" thick diamond tread wainscot. The wainscot shall be sealed to the doors and the door frame on all sides. Doors shall be fully insulated with 4" thick urethane foam. All door hardware shall be heavy duty type in brushed chrome finish with door to have three cam lift hinges,

latch with keyed cylinder lock and padlock capability, and inside safety release. Both doors shall be fitted with a 14 x 14" triple pane view port with heated glass and frame. Doors shall be equipped with magnetic gaskets and positive door closer. Door hinges and closers shall be suitable for the size and weight of the door. Door jambs shall be equipped with perimeter anti-condensation heaters. Door jambs shall be fabricated with fiberglass reinforced plastic for high impact strength. The bottom of each door shall be equipped with special double sweep gaskets that seal the bottom of the door to the threshold plate. Heater wires shall be provided below a 12 gauge stainless steel threshold plate below both entrance doors. Threshold plates shall be flush mounted and sealed to the building floor and the walk-in floor in a concealed manner. The front of each door, above the view port, shall have a 12" x 2" engraved phenolic plastic identification sign in Contracting Officer's selection of color with 1" letters. Each door section shall be fitted with a recessed 2-1/2" dial thermometer with 3'-0" extended probe for the thermometer. The freezer compartment shall be equipped with a heated pressure relief vent located above the entrance door.

Each door section shall have an incandescent light fixture with a light switch and neon pilot light mounted on the exterior door jamb below the thermometer. Each compartment shall be furnished with additional ceiling mounted light fixtures in quantities sufficient to achieve 2 watts per square foot of even light on the interior. Each light fixture shall be furnished with a 100 watt incandescent light bulb and a coated glass shatterproof globe. The ceiling mounted light fixtures shall be field wired with the conduit and wiring extended on the top exterior of the walk-in and connected to thru-ceiling junction boxes. The interior and exterior of all electrical conduit and penetrations through the walk-in panels shall be sealed.

Each walk-in compartment shall be equipped with a TA12000D-12-CCBDE battery backup alarm system as specified in paragraph 2.8 of this specification section. Each entrance door shall be equipped with transparent flexible vinyl strip curtains as specified in paragraph 2.8 of this specification section.

Provide and install matching 0.40" aluminum trim strips to close the gap between the walk-in and the building walls at each side. Trim strips shall extend from the floor to the finished ceiling and shall be mounted and sealed to the building walls and walk-in walls in a concealed manner. Walk-in shall also be supplied with removable 0.40" aluminum closure panels extending from the top of the walk-in to the finished ceiling on the exposed front and a portion of the right side as required to close off the area above the walk-in.

Contractor shall erect this walk-in in place carefully sealing it to the building floor with non-hardening caulking compound all in accordance with the manufacturer's recommendations.

4.52.1 Refrigeration Systems

Contractor Furnished, Contractor Installed.

The freezer compartment refrigeration system shall be a pre-assembled remote system with air-cooled direct expansion components. The evaporator shall be mounted at the ceiling of the freezer compartment, centered on the back wall, and the condensing unit shall be mounted on the building roof. The entire refrigeration system shall be designed by the manufacturer to meet the design condition of 100 F ambient air and -10 F interior

temperature taking into consideration the altitude at the place of installation.

The freezer shall have an evaporator measuring 72-1/4" long x 13-15/16" deep x 14-3/4" high with (3) 12" diameter fan motors operating at 208-60-1 phase and drawing a total of 2.7 amps. The unit shall have an automatic electric defrost cycle which draws no more than 13.3 amps. The air cooled condensing unit shall have a 3 H.P. semi-hermetic compressor operating on R-404A refrigerant. Condensing unit shall be wired 208/60/3 phase and draw 11.5 full load amps. The evaporator shall be connected to the condensing unit and shall be controlled by the control circuit and timer in the condensing unit.

Furnished with the system shall be a liquid line dryer, liquid line solenoid, expansion valve, suction and discharge vibration arrestors, a timer for electric defrost, a moisture liquid indicator, suction line filter, a room thermostat, pre-wired control panel and high and low pressure control.

Evaporator shall be ceiling hung by 1/2" nylon bolts with stainless steel washers and nuts. Hanger bolts shall be inserted through plastic sleeves with the penetrations sealed airtight.

All refrigeration lines shall be extended from the condensing unit to the evaporator, and insulated after the system has been thoroughly checked for refrigerant leaks. The insulation shall be continuous for the full length of all copper lines. The refrigeration lines shall be supported approximately every 8'-0" and at all turns. The copper refrigeration lines shall be isolated from the metal hangers. All joints in the insulation shall be sealed with insulation sealer. All insulated refrigeration piping located outdoors and exposed shall be covered completely with plastic sleeving secured and sealed in place.

Any penetration of the insulated walk-in panels for electrical wiring and conduit, refrigeration lines, drain lines and/or other services shall be made through vapor tight sleeves that pass completely through the panels and are sealed to the exterior and interior metal surfaces to prevent the infiltration of air into the insulated cavity. Interior of all sleeves shall be filled with suitable low temperature caulking. The interior of all electrical conduit shall also be sealed.

Provide a type L copper, 1" condensate drain line from the evaporator drain pan to outside the freezer and discharge into a floor drain. The freezer drain line shall be extended into the refrigerator compartment and manifold with the refrigerator evaporator drain line. Bottom of drain pan shall have a cast tee fitting with union and clean-out plug. Drain line shall be pitched 1/4" per foot for the full length and the end of the drain line above the floor drain shall have a "P" trap. Wrap the portion of the drain line in the freezer compartment with electric heat tape and cover with 1/2" fiberglass pipe insulation.

Condensing unit shall measure 37-3/4" long x 28-1/4" deep x 19-3/4" high and shall weigh 380 lbs. and shall be supplied with an aluminum weatherproof outdoor housing, crankcase heater, and low ambient temperature head pressure controls. Condensing unit shall have an oil separator which shall be piped to compressor crankcase with a shut-off valve in return line. Condensing unit shall have a 12" x 2" engraved phenolic plastic identification sign in Contracting Officer's selection of color with 1" letters. Freezer compartment shall be complete with all the above specified

equipment including refrigerant and all additional refrigeration equipment and accessories required to make a complete refrigeration system. The refrigeration system shall be completely installed as indicated on the plans with the electrical contractor connecting condensing unit, evaporator, solenoid, contactors, controls, lights, door heaters, threshold heaters, room thermostat and all component parts. The system shall be charged and adjusted and after the initial start-up and adjustment, the installing contractor shall furnish a one year refrigeration service policy on a local level including all labor, material, refrigerant and mileage.

The refrigerator compartment shall have a separate refrigeration system consisting of a pre-assembled remote system with air-cooled direct expansion components. The evaporator shall be mounted at the ceiling of the refrigerator compartment, centered on the back wall, and the condensing unit shall be mounted on the building roof. The refrigeration system shall be designed by the manufacturer to meet the design condition of 100 F. ambient air and 36 F. interior temperature taking into consideration the altitude at the place of installation.

Refrigerator shall have an evaporator measuring 52-1/4" long x 13-15/16" deep x 14-3/4" high with (2) 12" diameter fan motors operating at 120-60-1 phase and drawing total of 3.6 amps. The unit shall have off-cycle air type defrost. The air cooled condensing unit shall have a 1.5 H.P. semi-hermetic compressor operating on R-22 refrigerant. Condensing unit shall be wired 208-60-3 phase with 15 minimum circuit ampacity. The evaporator and the condensing unit shall each be connected to a separate electrical circuit and shall be operated by a common thermostat furnished by the manufacturer.

Furnished with the system shall be a liquid line dryer, liquid line solenoid, expansion valve, suction and discharge vibration arrestors, a moisture liquid indicator, suction line filter, a room thermostat, pre-wired control panel and high and low pressure control.

Evaporator shall be ceiling hung by 1/2" nylon bolts with stainless steel washers and nuts. Hanger bolts shall be inserted through plastic sleeves with the penetrations sealed airtight.

Refrigeration lines shall be extended from the condensing unit to the evaporator, and insulated after the system has been thoroughly checked for refrigerant leaks. The insulation shall be continuous for the full length of all copper lines. The refrigeration lines shall be supported approximately every 8'-0" and at all turns. The copper refrigeration lines shall be isolated from the metal hangers. All joints in the insulation shall be sealed with insulation sealer. All insulated refrigeration piping located outdoors and exposed shall be covered completely with plastic sleeving secured and sealed in place.

Any penetration of the insulated panels for electrical wiring and conduit, refrigeration lines, drain lines and/or other services shall be made through vapor tight sleeves that pass completely through the panels and are sealed to the exterior and interior metal surfaces to prevent the infiltration of air into the insulated cavity. Interior of all sleeves shall be filled with suitable low temperature caulking. The interior of all electrical conduit shall also be sealed.

Provide type L copper, 1" condensate drain line from the evaporator drain pan to outside the refrigerator and discharge into a floor drain. Bottom of drain pan shall have a cast tee fitting with union and clean-out plug. Drain line shall be pitched 1/4" per foot for the full length and the end

of the drain line above the floor drain shall have a "P" trap.

Condensing unit shall measure 37-3/4" long x 28-1/4" deep x 17-1/4" high and weigh 257 lbs. and shall be supplied with an aluminum weatherproof outdoor housing, crankcase heater, and low ambient temperature head pressure controls. Condensing unit shall have a 12" x 2" engraved phenolic plastic identification sign in Contracting Officer's selection of color with 1" letters. Compartment shall be complete with all the above specified equipment including refrigerant and all additional refrigeration equipment and accessories required to make a complete refrigeration system. The refrigeration system shall be completely installed as indicated on the plans with the electrical contractor connecting condensing units, evaporators, solenoids, contactors, controls, lights, door heaters, threshold heaters, room thermostats and all component parts. The system shall be charged and adjusted and after the initial start-up and adjustment, the installing contractor shall furnish a one year refrigeration service policy on a local level including all labor, material, refrigerant and mileage.

4.53 Walk-In Shelving

Government Furnished, Government Installed.

4.54 Exhaust Hood

Contractor Furnished, Contractor Installed.

Exhaust hood shall be a high velocity water wash ventilator constructed to comply with NFPA-96, BOCA, UMC, IMC and SBCCI mechanical codes. The exhaust hood shall be UL Listed and NSF approved. The exhaust hood shall be constructed in the size, shape and arrangement as indicated on the plan and schedule. The exhaust hood shall measure overall approximately 28'-0" long x 4'-6" deep x 2'-6" high. Exhaust hood shall be installed with the bottom edge at 6'-6" above the finished floor. The exhaust hood shall consist of two 14'-0" long hood sections mounted side by side. The exhaust hood shall have a built-in 3" air space at the rear and the ends when mounted against a limited combustible wall. Continuous front and rear bracket shall be provided to facilitate mounting to the wall and hanging from the building structure above.

The exhaust hood shall be complete with high velocity grease extractor, plenum fire dampers, duct collars, make-up air plenum, hanger brackets, piping and nozzles. The exhaust hood shall have custom air baffles to reduce the exhaust air volume over specified cooking equipment as indicated on the plan. The wash control panel shall be as specified under Item #56. Both sections of exhaust hood shall be pre-wired and pre-plumbed to individual connection points. The drain outlets shall be located at the outside ends of each section of the exhaust hood. The drains shall be extended to floor sinks for an air gap type connection. The drain lines shall be chrome plated.

The exhaust hood shall be of all stainless steel construction of not less than 18 gauge, type 304 with all exposed surfaces polished to a #4 finish. Each exhaust hood section shall be a high velocity type grease extractor with an air inlet opening above and parallel to the cooking surface. Each section shall utilize three full-length horizontal self draining baffles for centrifugal grease extraction providing a grease extraction rate of up to 95% when operated at the design specifications. The baffle at the air inlet shall be a three position damper controlled by an electrically driven

actuator, specifically listed for such use. In position one, the damper shall be a grease extraction baffle. In position two, the damper shall be in the wash mode and in position three the baffle shall be in the fire mode. The exhaust hood shall be equipped with full length non-gasketed hinged inspection doors to provide access to the fire suppression nozzles, fusible links, wash system manifolds and nozzles, drains etc.

The exhaust hood shall include a full length wash manifold equipped with two rows of brass spray nozzles. The main grease gutter shall have a 1" slope to the drain opening and the drain shall be equipped with a pre-flush line to purge the drain during a wash cycle. All controls and components for operation of the wash system shall be housed in the exhaust control panel specified under Item #56.

The exhaust hood shall be equipped with an internal fire protection system activated by fail-safe thermostats located at the duct collars. The fire damper shall automatically close when the exhaust air reaches the set point. The exhaust and make-up air fans shall be shut-off and the internal wash system shall be initiated. A remote fire switch shall be provided and located as indicated on the plan.

The exhaust hood shall have exhaust and makeup air duct collars, in the size and quantity as indicated on the plan. The exhaust hood shall have an air supply plenum with duct collars and incorporate removable stainless steel perforated panels for front face discharge make-up air. The plenum insulation shall be foil-faced fiberglass insulation. The exhaust hood shall operate at the exhaust air and make-up air quantities indicated on the plan

Each exhaust hood section shall be equipped with (3) 4'-0" long recessed fluorescent light fixtures. Light fixtures in each hood section shall be factory inter-wired with a coiled flex conduit for interconnection to the other hood section.

Exhaust hood shall be supplied with stainless steel closure channels on front and both ends as required to close the gap between the top of the exhaust hood and the finished ceiling. This entire exhaust hood shall otherwise be in accordance paragraph 2.6 of these specifications and with the manufacturer's standard specifications.

4.55 6 Burner Stove (Existing)

Government Furnished, Contractor Installed.

4.56 Exhaust Hood Control Panel

Contractor Furnished, Contractor Installed.

The exhaust hood control panel shall be furnished to house electrical and plumbing components for operation of the exhaust hood, Item #54 and shall be U.L. Listed. The cabinet shall measure approximately 34" wide x 42" high x 7" deep. The cabinet shall be constructed of 18 gauge stainless steel with a #4 finish. The panel shall have welded corners and hinged doors to the plumbing and the electrical compartments. The electrical compartment shall be water tight. The cabinet shall be for recessed application, flush mounted in the wall as indicated on the plan and shall be equipped with a full perimeter one-piece stainless steel trim ring.

The electrical compartment shall be equipped with programmable logic

controller for controlling all functions of the exhaust fan and makeup air unit, the three position damper, wash cycle, and internal fire system. The control shall include fan on, wash on and fire status lights. It shall also include volt-free contacts for supply and exhaust fans for interfacing with building management system or other control circuits and volt-free contacts for the fire cycle for interconnection to the building fire alarm or monitoring system.

The plumbing compartment shall consist of a shut-off valve, pressure/temperature gauge, slow close solenoid valve, detergent pump, detergent tank and a built-in reduced pressure principle device backflow preventer. All plumbing components shall be suitable for operation with 140 F water. The bottom of the plumbing compartment shall be equipped with a 1" drain to be extended to a floor sink for an air gap connection.

All components shall be pre-wired and pre-plumbed for field hook-up by applicable trades. The exhaust hood control panel shall be in accordance with paragraph 2.1 of these specifications and with the manufacturer's standard specifications.

4.57 Exhaust Hood Fire Panel

Contractor Furnished, Contractor Installed.

The exhaust hood, Item #54, shall be furnished with a liquid agent fire suppression system which shall be installed in a stainless steel cabinet mounted on the wall near the ceiling as shown on plan. No conduit or piping shall be exposed to view. The fire suppression system shall be a U.L. Listed liquid agent, cartridge operated, regulated pressure system with a fixed nozzle agent distribution network. The system shall be capable of automatic detection and actuation with local or remote manual actuation. Fire suppression system shall be provided with a remote manual pull station recessed in the wall as shown on plan. The fire suppression system shall be factory piped and complete with all necessary surface protection nozzles as required by Code. The system shall be a multiple system with capacity properly sized for the nozzles required. The extinguishing agent shall be a potassium carbonate, potassium acetate-based formulation designed for flame knock down and securement of grease related fires. The regulated release mechanism shall be a spring loaded mechanical/pneumatic type with a nitrogen cartridge for providing the expellant gas supply to the liquid agent tanks. The regulated release mechanism shall contain a factory installed regulator set at 100 P.S.I.The mechanism shall have a visual indicator of the cocked or fired position without having to open the enclosure. The fire suppression system shall have an automatic fusible link detection system. The fire suppression system shall also have a microswitch to allow the shut-off of all gas and electricity for the items below the exhaust hood. Shut-off devices shall be furnished and installed under other sections of the specifications. All exposed piping for the fire suppression system shall be chrome plated or chrome sleeved. The fire suppression system shall be installed in accordance with the Underwriter's Laboratories Listing, NFPA 96 and NFPA 17A and shall conform to all local authorities having jurisdiction over this fire suppression system. Upon completion of the installation of the fire suppression system, a qualified fire suppression installer shall inspect the system and certify in writing that this system meets all applicable Codes.

4.58 Deli Display (Existing)

Government Furnished, Government Installed.

4.59 Monitor

Government Furnished, Contractor Installed.

4.60 Time Card Clock

Government Furnished, Government Installed.

-- End of Section --

SECTION 12490

WINDOW TREATMENT
01/98

PART 1 WORK DESCRIPTION

1.1 REFERENCES

The publications listed below form a part of this specification to the extent referenced. The publications are referred to in the text by basic designation only.

FEDERAL SPECIFICATIONS (FS)

FS AA-V-00200 (Rev B) Venetian Blinds

1.2 SUBMITTALS

Government approval is required for submittals with a "G" designation; submittals not having a "G" designation are for information only. When used, a designation following the "G" designation identifies the office that will review the submittal for the Government. The following shall be submitted in accordance with Section 01330 SUBMITTAL PROCEDURES:

SD-02 Shop Drawings

Approved Detail Drawings; G

Drawings showing fabrication and installation details. Drawings shall show layout and locations of track, direction of draw, mounting heights, and details.

SD-03 Product Data

Window Treatments; G
Hardware

Manufacturer's data composed of catalog cuts, brochures, product information, and maintenance instructions.

SD-04 Samples

Window Treatments

Three samples of each type and color of window treatment. Blind slats or louvers shall be 6 inches in length for each color.

1.3 GENERAL

Window treatment shall be provided, complete with necessary brackets, fittings, and hardware. Each window treatment type shall be a complete unit provided in accordance with paragraph WINDOW TREATMENT PLACEMENT SCHEDULE. Equipment shall be mounted and operated as indicated. Windows to receive a treatment shall be completely covered. The Contractor shall take measurements at the building and shall be responsible for the proper fitting and hanging of the equipment.

1.4 DELIVERY, STORAGE, AND HANDLING

Components shall be delivered to the jobsite in the manufacturer's original packaging with the brand or company name, item identification, and project reference clearly marked. Components shall be stored in a dry location that is adequately ventilated and free from dust, water, or other contaminants and shall have easy access for inspection and handling. Materials shall be stored flat in a clean dry area with temperature maintained above 50 degrees F.

1.5 FIELD MEASUREMENTS

The Contractor shall become familiar with details of the work, verify dimensions in the field, and shall advise the Contracting Officer of any discrepancy before performing the work.

1.6 WARRANTY

Manufacturer's standard performance guarantees or warranties that extend beyond a 1 year period shall be provided.

PART 2 PRODUCTS

2.1 WINDOW BLINDS

Each blind, including hardware, accessory items, mounting brackets and fastenings, shall be provided as a complete unit produced by one manufacturer. All parts shall be one color unless otherwise shown, and match the color of the blind slat. Steel features shall be treated for corrosion resistance.

2.1.1 Horizontal Blinds

Horizontal blinds shall conform to FS AA-V-00200, Type II (1 inch slats), except as modified below. Blind units shall be capable of nominally 180 degree partial tilting operation and full-height raising. Blinds shall be inside mount as shown.

2.1.1.1 Head Channel and Slats

Head channel shall be steel or aluminum nominal 0.024 for Type II. Slats shall be aluminum, not less than 0.006 inch thick, and of sufficient strength to prevent sag or bow in the finished blind. A sufficient amount of slats shall be provided to assure proper control, uniform spacing, and adequate overlap.

2.1.1.2 Controls

The slats shall be tilted by a transparent tilting wand, hung vertically by its own weight, and shall swivel for easy operation. The tilter control shall be of enclosed construction. Moving parts and mechanical drive shall be made of compatible materials which do not require lubrication during normal expected life. The tilter shall tilt the slats to any desired angle and hold them at that angle so that any vibration or movement of ladders and slats will not drive the tilter and change the angle of slats. A mechanism shall be included to prevent over tightening. The wand shall be of sufficient length to reach to within 5 feet of the floor.

2.1.1.3 Intermediate Brackets

Intermediate brackets shall be provided for installation of blinds over 48 inches wide and shall be installed as recommended by the manufacturer.

2.1.1.4 Hold-Down Brackets

Universal type hold-down brackets for sill or jamb mount shall be provided.

2.2 COLOR

Color shall be as shown on drawings.

PART 3 EXECUTION

3.1 INSTALLATION

Installation shall be in accordance with the approved detail drawings and manufacturer's installation instructions. Units shall be level, plumb, secure, and at proper height and location relative to window units. The Contractor shall furnish and install supplementary or miscellaneous items in total, including clips, brackets, or anchorages incidental to or necessary for a sound, secure, and complete installation. Installation shall not be initiated until completion of room painting and finishing operations. Upon completion of the installation, window treatments shall be adjusted for form and appearance, shall be in proper operating condition, and shall be free from damage or blemishes. Damaged units shall be repaired or replaced by the Contractor as directed by the Contracting Officer.

-- End of Section --

SECTION 13080

SEISMIC/FORCE PROTECTION FOR MISCELLANEOUS EQUIPMENT
04/99

PART 1 GENERAL

1.1 REFERENCES

The publications listed below form a part of this specification to the extent referenced. The publications are referred to in the text by basic designation only.

AMERICAN SOCIETY FOR TESTING AND MATERIALS (ASTM)

ASTM A 36/A 36M	(1997a) Carbon Structural Steel
ASTM A 53	(1999) Pipe, Steel, Black and Hot-Dipped, Zinc-Coated, Welded and Seamless
ASTM A 500	(1999) Cold-Formed Welded and Seamless Carbon Steel Structural Tubing in Rounds and Shapes
ASTM A 603	(1998) Zinc-Coated Steel Structural Wire Rope
ASTM A 653/A 653M	(1999) Steel Sheet, Zinc-Coated (Galvanized) or Zinc-Iron Alloy-Coated (Galvannealed) by the Hot-Dip Process

U.S. ARMY CORPS OF ENGINEERS (USACE)

TI 809-04	(1998) Seismic Design for Buildings

1.2 SYSTEM DESCRIPTION

1.2.1 General Requirements

The requirements for seismic/force protection measures described in this section shall be applied to the mechanical equipment and systems outlined in Section 15070 SEISMIC PROTECTION FOR MECHANICAL EQUIPMENT, and the miscellaneous equipment and systems listed below. Seismic/force protection requirements shall apply to all areas of the Flight Kitchen Facility. Seismic/force protection requirements are being applied to this project in order to conform to recent antiterrorism and force protection standards set forth by the Department of Defense. Force Protection Design shall be in accordance with TI 809-04 and additional data furnished by the Contracting Officer, and shall be provided in addition to any other requirements called for in other sections of these specifications. The design for seismic/force protection shall be based on criteria and on site response coefficients provided on the contract structural drawings. Resistance to lateral forces induced by earthquakes and/or terrorist threats shall be accomplished without consideration of friction resulting from gravity loads. The basic force formulas, for Ground Motions A and B in Chapter 3 of TI 809-04, use the design spectral response acceleration parameters for

the performance objective of the building, not for equipment in the building; therefore, corresponding adjustments to the formulas shall be required.

1.3 SUBMITTALS

Government approval is required for submittals with a "G" designation; submittals not having a "G" designation are for information only. When used, a designation following the "G" designation identifies the office that will review the submittal for the Government. The following shall be submitted in accordance with Section 01330 SUBMITTAL PROCEDURES:

SD-02 Shop Drawings

Bracing; G

Detail drawings along with catalog cuts, templates, and erection and installation details, as appropriate, for the items listed. Submittals shall be complete in detail; shall indicate thickness, type, grade, class of metal, and dimensions; and shall show construction details, reinforcement, anchorage, and installation with relation to the building construction.

SD-03 Product Data

Bracing; G

Copies of the design calculations for nonrigid or flexibly-mounted equipment with the detail drawings. Calculations shall be stamped by a registered engineer and shall verify the capability of structural members to which bracing is attached for carrying the load from the brace.

1.4 EQUIPMENT REQUIREMENTS

1.4.1 Rigidly Mounted Equipment

All overhead mechanical and electrical equipment, piping, cable trays, lighting, and components weighing 30 pounds or greater shall be constructed and assembled to withstand the seismic forces specified in TI 809-04, Chapter 10. For any rigid equipment which is rigidly attached on both sides of a building expansion joint, flexible joints for piping, electrical conduit, etc., that are capable of accommodating displacements equal to the full width of the joint in both orthogonal directions, shall be provided.

1.4.2 Nonrigid or Flexibly-Mounted Equipment

All overhead mechanical equipment including CRU's, exhaust fans, and in-line pumps shall be constructed and assembled to resist a horizontal lateral force of 0.5 times the component weight of the equipment in any direction and 1.5 times the component weight in the downward direction at the vertical center of gravity of the equipment.

PART 2 PRODUCTS

2.1 SWAY BRACING

Material used for members listed in this section on the drawings, shall be structural steel conforming with the following:

a. Plates, rods, and rolled shapes, ASTM A 36/A 36MASTM A 572/A 572M, Grade 503.

b. Wire rope, ASTM A 603.

c. Tubes, ASTM A 500, Grade B

d. Pipes, ASTM A 53, Type E or S, Grade B.

e. Light gauge angles, less than 1/4 inch thickness, ASTM A 653/A 653M.

PART 3 EXECUTION

3.1 BRACING

Bracing shall conform to the arrangements shown in TI 809-04, Chapter 10. Trapeze-type hanger shall be secured with not less than two 1/2 inch bolts.

3.2 SWAY BRACES FOR PIPING

Transverse sway bracing for steel and copper pipe shall be provided at intervals not to exceed those specified or otherwise shown on the drawings. Transverse sway bracing for pipes of materials other than steel and copper shall be provided at intervals not to exceed the hanger spacing as specified in Section 15400 PLUMBING, GENERAL PURPOSE. Bracing shall consist of at least one vertical angle 2 x 2 x 16 gauge and one diagonal angle of the same size.

3.2.1 Longitudinal Sway Bracing

Longitudinal sway bracing shall be provided in accordance with Section 15070 SEISMIC/FORCE PROTECTION CONTROL FOR MECHANICAL EQUIPMENT.

3.2.2 Anchor Rods, Angles, and Bars

Anchor rods, angles, and bars shall be bolted to either pipe clamps or pipe flanges at one end and cast-in-place concrete or masonry insert or clip angles bolted to the steel structure on the other end. Rods shall be solid metal or pipe as specified below. Anchor rods, angles, and bars shall not exceed lengths given in the tabulation below.

3.2.3 Maximum Length for Anchor Braces

Type	Size (Inches)	Maximum Length* (Feet/Inches)
Angles	1-1/2 x 1-1/2 x 1/4	4-10
	2 x 2 x 1/4	6-6
	2-1/2 x 1-1/2 x 1/4	8-0
	3 x 2-1/2 x 1/4	8-10
	3 x 3 x 1/4	9-10
Rods	3/4	3-1
	7/8	3-8
Flat Bars	1-1/2 x 1/4	1-2

Type	Size (Inches)	Maximum Length* (Feet/Inches)
	2 x 1/4	1-2
	2 x 3/8	1-9
Pipes (40S)	1	7-0
	1-1/4	9-0
	1-1/2	10-4
	2	13-1

3.2.4 Bolts

Bolts used for attachment of anchors to pipe and structure shall be not less than 1/2 inch diameter.

3.3 EQUIPMENT SWAY BRACING

3.3.1 Suspended Equipment and Light Fixtures

Equipment sway bracing shall be provided for items supported from overhead floor or roof structural systems, including light fixtures. Braces shall consist of angles, rods, wire rope, bars, or pipes arranged as shown and secured at both ends with not less than 1/2 inch bolts. Sufficient braces shall be provided for equipment to resist a horizontal force equal to 0.15 times the weight of equipment without exceeding safe working stress of bracing components. Details of equipment bracing shall be submitted for acceptance. In lieu of bracing with vertical supports, these items may be supported with hangers inclined at 45 degrees directed up and radially away from equipment and oriented symmetrically in 90-degree intervals on the horizontal plane, bisecting the angles of each corner of the equipment, provided that supporting members are properly sized to support operating weight of equipment when hangers are inclined at a 45-degree angle.

3.3.2 Floor or Pad Mounted Equipment

3.3.2.1 Shear Resistance

Floor mounted equipment shall be bolted to the floor. Requirements for the number and installation of bolts to resist shear forces shall be in accordance with paragraph ANCHOR BOLTS.

-- End of Section --

SECTION 13110

CATHODIC PROTECTION SYSTEM (SACRIFICIAL ANODE)
11/98

PART 1 GENERAL

1.1 REFERENCES

The publications listed below form a part of this specification to the extent referenced. The publications are referred to in the text by basic designation only.

AMERICAN SOCIETY FOR TESTING AND MATERIALS (ASTM)

ASTM B 418	(1995a) Cast and Wrought Galvanic Zinc Anodes
ASTM B 843	(1993; R 1998) Magnesium Alloy Anodes for Cathodic Protection
ASTM D 1248	(1998) Polyethylene Plastics Molding and Extrusion Materials

CODE OF FEDERAL REGULATIONS (CFR)

49 CFR 195	Transportation of Hazardous Liquids by Pipeline

NACE INTERNATIONAL (NACE)

NACE RP0169	(1996) Control of External Corrosion on Underground or Submerged Metallic Piping Systems
NACE RP0188	(1999) Discontinuity (Holiday) Testing of Protective Coatings
NACE RP0190	(1995) External Protective Coatings for Joints, Fittings, and Valves on Metallic Underground or Submerged Pipelines and Piping Systems

NATIONAL ELECTRICAL MANUFACTURERS ASSOCIATION (NEMA)

NEMA TC 2	(1998) Electrical Polyvinyl Chloride (PVC) Tubing (EPT) and Conduit (EPC-40 and EPC-80)
NEMA WC 5	(1992; Rev 2, 1996) Thermoplastic-Insulated Wire and Cable for the Transmission and Distribution of Electrical Energy

NATIONAL FIRE PROTECTION ASSOCIATION (NFPA)

NFPA 70	(1999) National Electrical Code

UNDERWRITERS LABORATORIES (UL)

UL 6	(1997) Rigid Metal Conduit
UL 510	(1994; Rev thru Apr 1998) Polyvinyl Chloride, Polyethylene, and Rubber Insulating Tape
UL 514A	(1996; Rev Dec 1999) Metallic Outlet Boxes

1.2 SUBMITTALS

Government approval is required for submittals with a "G" designation; submittals not having a "G" designation are for information only. When used, a designation following the "G" designation identifies the office that will review the submittal for the Government. The following shall be submitted in accordance with Section 01330 SUBMITTAL PROCEDURES:

SD-02 Shop Drawings

Drawings; G

Six copies of detail drawings consisting of a complete list of equipment and material including manufacturer's descriptive and technical literature, catalog cuts, results of system design calculations including soil-resistivity, installation instructions and certified test data stating the maximum recommended anode current output density and the rate of gaseous production if any at that current density. Detail drawings shall contain complete wiring and schematic diagrams and any other details required to demonstrate that the system has been coordinated and will function properly as a unit.

Contractor's Modifications; G

Six copies of detail drawings showing proposed changes in location, scope of performance indicating any variations from, additions to, or clarifications of contract drawings. The drawings shall show proposed changes in anode arrangement, anode size and number, anode materials and layout details, conduit size, wire size, mounting details, wiring diagram, method for electrically-isolating each pipe, and any other pertinent information to proper installation and performance of the system.

SD-03 Product Data

Equipment; G

Within 30 days after receipt of notice to proceed, an itemized list of equipment and materials including item number, quantity, and manufacturer of each item. The list shall be accompanied by a description of procedures for each type of testing and adjustments, including testing of coating for thickness and holidays. Installation of materials and equipment shall not commence until this submittal is approved.

Spare Parts; G

Spare parts data for each different item of material and equipment specified, after approval of detail drawings and not later than six (6) months prior to the date of beneficial occupancy. The data shall include a complete list of parts, special tools, and supplies, with current unit prices and source of supply. One (1) spare anode of each type shall be furnished.

SD-06 Test Reports

Tests and Measurements; G

Test reports tabulating all field tests and measurements performed, upon completion and testing of the installed system and including close interval potential survey, casing and interference tests, final system test verifying protection, insulated joint and bond tests, and holiday coating test.

Contractor's Modifications; G

Final report regarding Contractor's modifications. The report shall include pipe-to-soil measurements throughout the affected area, indicating that the modifications improved the overall conditions, and current measurements for anodes. The following special materials and information are required: taping materials and conductors; zinc grounding cell, installation and testing procedures, and equipment; coating material; system design calculations for anode number, life, and parameters to achieve protective potential; backfill shield material and installation details showing waterproofing; bonding and waterproofing details; insulated resistance wire; exothermic weld equipment and material.

SD-07 Certificates

Cathodic Protection System; G

Proof that the materials and equipment furnished under this section conform to the specified requirements contained in the referenced standards or publications. The label or listing by the specified agency will be acceptable evidence of such compliance.

Services of "Corrosion Expert"; G

Evidence of qualifications of the "corrosion expert."

a. The "corrosion expert's" name and qualifications shall be certified in writing to the Contracting Officer prior to the start of construction.

b. Certification shall be submitted giving the name of the firm, the number of years of experience, and a list of not less than five (5) of the firm's installations three (3) or more years old that have been tested and found satisfactory.

SD-10 Operation and Maintenance Data

Cathodic Protection System; G

Before final acceptance of the cathodic protection system, six copies of operating manuals outlining the step-by-step procedures required for system startup, operation, adjustment of current flow, and shutdown. The manuals shall include the manufacturer's name, model number, service manual, parts list, and brief description of all equipment and their basic operating features. Six copies of maintenance manual, listing routine maintenance procedures, recommendation for maintenance testing, possible breakdowns and repairs, and troubleshooting guides. The manuals shall include single-line diagrams for the system as installed; instructions in making pipe-to-reference cell and tank-to-reference cell potential measurements and frequency of monitoring; instructions for dielectric connections, interference and sacrificial anode bonds; instructions shall include precautions to ensure safe conditions during repair of pipe or other metallic systems. The instructions shall be neatly bound between permanent covers and titled "Operating and Maintenance Instructions." These instructions shall be submitted for the Contracting Officer's approval. The instructions shall include the following:

a. As-built drawings showing the locations of the piping, location of all anodes and test stations, locations of all insulating joints, and structure-to-reference cell potentials as measured during the tests required by Paragraph: TESTS AND MEASUREMENTS, of this section.

b. Recommendations for maintenance testing, including instructions in making pipe-to-reference cell potential measurements and frequency of testing.

c. All maintenance and operating instructions and nameplate data shall be in English.

d. Instructions shall include precautions to insure safe conditions during repair of pipe system.

Training Course; G

The proposed Training Course Curriculum (including topics and dates of discussion) indicating that all of the items contained in the operating and maintenance instructions, as well as demonstrations of routine maintenance operations, including testing procedures included in the maintenance instructions, are to be covered.

1.3 GENERAL REQUIREMENTS

The Contractor shall furnish and install a complete, operating, sacrificial anode cathodic protection system in complete compliance with NFPA 70, with all applicable Federal, State, and local regulations and with minimum requirements of this contract. In addition to the minimum requirements of these specifications, construction of all hazardous liquid pipelines, including fuel pipelines, and associated cathodic protection systems shall be in compliance with 49 CFR 195. The services required include planning, installation, adjusting and testing of a cathodic protection system, using sacrificial anodes for cathodic protection of the Water and Fire Protection lines, their connectors and lines under the slab or floor foundation. The

cathodic protection system shall include anodes, cables, connectors, corrosion protection test stations, and any other equipment required for a complete operating system providing the NACE criteria of protection as specified. Insulators are required whenever needed to insulate the pipes from any other structure.

1.3.1 Services of "Corrosion Expert"

The Contractor shall obtain the services of a "corrosion expert" to supervise, inspect, and test the installation and performance of the cathodic protection system. "Corrosion expert" refers to a person, who by thorough knowledge of the physical sciences and the principles of engineering and mathematics, acquired by professional education and related practical experience, is qualified to engage in the practice of corrosion control of buried or submerged metallic surfaces. Such a person must be accredited or certified by the National Association of Corrosion Engineers (NACE) as a NACE Accredited Corrosion Specialist or a NACE certified Cathodic Protection (CP) Specialist or be a registered professional engineer who has certification or licensing that includes education and experience in corrosion control of buried or submerged metallic piping and tank systems, if such certification or licensing includes 5 years experience in corrosion control on underground metallic surfaces of the type under this contract. The "corrosion expert" shall make at least 3 visits to the project site. The first of these visits shall include obtaining soil resistivity data, acknowledging the type of pipeline coatings to be used and reporting to the Contractor the type of cathodic protection required. Once the submittals are approved and the materials delivered, the "corrosion expert" shall revisit the site the ensure the Contractor understands installation practices and laying out the components. The third visit shall involve testing the installed cathodic protection systems and training applicable personnel on proper maintenance techniques.

1.3.2 Contractor's Modifications

The specified system is based on a complete galvanic system with magnesium sacrificial anodes. The Contractor may modify the cathodic protection system after review of the project, site verification, and analysis, if the proposed modifications include the anodes specified and will provide better overall system performance. The modifications shall be fully described, shall be approved by the Contracting Officer's representative, and shall meet the following criteria. The proposed system shall achieve a minimum pipe-to-soil "instant off" potential of minus 850 millivolts with reference to a saturated copper-copper sulfate reference cell on the underground components of the piping or other metallic surface or a polarization shift of 100 millivolts more negative relative to baseline structure-to-soil voltage potential. The Contractor shall take resistivity measurements of the soil in the vicinity of the pipes and ground bed sites. Based upon the measurements taken, the current and voltage shall be required to produce a minimum of minus 850 millivolts "instant off" potential between the structure being tested and the reference cell or a polarization shift of 100 millivolts more negative relative to baseline structure-to-soil voltage potential. This potential shall be obtained over 95 percent of the metallic area. The anode system shall be designed for a life of twenty-five (25) years of continuous operation.

1.3.3 Isolators

Isolators are required to electrically insulate the indicated pipes from

any other structure. Isolators shall be provided.

1.3.4 Anode and Bond Wires

A minimum number of magnesium anodes and test stations is shown in the contract drawings. For each test station, the metallic components and structures to be protected shall be made electrically continuous. This shall be accomplished by installing bond wires between the various structures. Bonding of existing buried structures may also be required to preclude detrimental stray current effects and safety hazards. Provisions shall be included to return stray current to its source without damaging structures intercepting the stray current. The electrical isolation of underground facilities in accordance with acceptable industry practice shall be included under this section. All tests shall be witnessed by the Contracting Officer.

1.3.5 Surge Protection

Approved zinc grounding cells or sealed weatherproof lightning arrestor devices shall be installed across insulated flanges or fittings installed in underground piping as indicated on the drawings. The arrestor shall be gapless, self-healing, solid state type. Zinc anode composition shall conform to ASTM B 418, Type II. Lead wires shall be number 6 AWG copper with high molecular weight polyethylene (HMWPE) insulation. The zinc grounding cells shall not be prepackaged in backfill but shall be installed as detailed on the drawings. Lightning arrestors or zinc grounding cells are not required for insulated flanges on metallic components used on nonmetallic piping systems.

1.3.6 Summary of Services Required

The scope of services shall include, but shall not be limited to, the following:

a. Cathodic Protection Systems.

b. System testing.

c. Casing corrosion control.

d. Interference testing.

e. Training.

f. Operating and maintenance manual.

g. Insulator testing and bonding testing.

h. Coating and holiday testing shall be submitted within 45 days of notice to proceed.

1.3.7 Nonmetallic Pipe System

In the event pipe other than metallic pipe is approved and used in lieu of metallic pipe, all metallic components of this pipe system shall be protected with cathodic protection. Detailed drawings of cathodic protection for each component shall be submitted to the Contracting Officer for approval within 45 days after date of receipt of notice to proceed, and before commencement of any work.

1.3.7.1 Coatings

Coatings for metallic components shall be as required for metallic fittings. Protective covering (coating and taping) shall be completed and tested on each metallic component (such as valves, hydrants and fittings). This covering shall be as required for underground metallic pipe. Each test shall be witnessed by the Contracting Officer. Coatings shall be selected, applied, and inspected in accordance with NACE RP0190 and as specified in these specifications. The use of nonmetallic pipe does not change other requirements of the specifications. Any deviations due to the use of nonmetallic pipe shall be submitted for approval.

1.3.7.2 Tracer Wire

When a nonmetallic pipe line is used to extend or add to an existing metallic line, an insulated No. 8 AWG copper wire shall be thermit-welded to the existing metallic line and run the length of the new nonmetallic line. This wire shall be used as a locator tracer wire and to maintain continuity to any future extensions of the pipe line.

1.3.8 Tests of Components

A minimum of two (2) tests shall be made at each metallic component in the piping system. One (1) measurement shall be made directly over the anodes and the other test shall be over the outer edge of the component, but at the farthest point from the anodes. Structure and pipes shall be shown with the cathodic protection equipment. All components of the cathodic protection system shall be shown on drawings, showing their relationship to the protected structure or component. A narrative shall describe how the cathodic protection system will work and provide testing at each component. Components requiring cathodic protection shall include but not be limited to the following:

a. Pipes under the floor slab or foundations.

b. PIV.

c. Shutoff valves.

d. Metallic pipe extended from aboveground locations.

e. Each connector or change-of-direction device.

f. Any metallic pipe component or section.

g. Backflow preventor.

1.3.9 Drawings

Detailed drawings shall be provided showing location of anodes, insulated fittings, test stations, permanent reference cells, and bonding. Locations shall be referenced to two (2) permanent facilities or mark points.

1.3.10 Electrical Potential Measurements

For steel piping, all potential tests shall be made at a minimum of 250foot intervals witnessed by the Contracting Officer. Submittals shall identify

test locations on separate drawing, showing all metal to be protected and all cathodic protection equipment. Test points equipment and protected metal shall be easily distinguished and identified.

1.3.11 Achievement of Criteria for Protection

All conductors, unless otherwise shown, shall be routed to or through the test stations. Each system provided shall achieve a minimum pipe-to-soil "instant off" potential of minus 850 millivolt potentials with reference to a saturated copper-copper-sulfate reference cell on all underground components of the piping or a polarization shift of 100 millivolts more negative relative to baseline structure-to-soil voltage potential. Based upon the measurements taken, the current and voltage of the anodes should be adjusted as required to produce a minimum of minus 850 millivolts "instant off" potential between the structure being tested and the reference cell, or a polarization shift of 100 millivolts more negative relative to baseline structure-to-soil voltage potential. This potential should be obtained over 95 percent of the metallic area. This must be achieved without the "instant off" potential exceeding 1150 millivolts. Testing will be witnessed by the Contracting Officer. Additional anodes shall be provided by the Contractor if required to achieve the minus 850 millivolts "instant off," or a polarization shift of 100 millivolts more negative relative to baseline structure-to-soil voltage potential. Although acceptance criteria of the cathodic protection systems are defined in NACE RP0169, for this project the "instant off" potential of minus 850 millivolts, or a polarization shift of 100 millivolts more negative relative to baseline structure-to-soil voltage potential is the only acceptable criteria.

1.3.12 Metallic Components and Typicals

a. Metallic components: As a minimum, each metallic component shall be protected with two (2) magnesium anodes. This number of anodes is required to achieve minus 850 millivolts "instant off" potential on the metallic area, or a polarization shift of 100 millivolts more negative relative to baseline structure-to-soil voltage potential and at the same time not provide overvoltage above 1150 millivolts "instant off." As a minimum, the magnesium anode unpackaged weight shall be 9 pounds. The magnesium anodes shall be located on each side of the metallic component and routed through a test station.

b. Fire Hydrants: Fire hydrant pipe components shall have a minimum of two (2) anodes. These magnesium anodes shall have an unpackaged weight of 9 pounds.

c. Pipe Under Concrete Slab: Pipe under concrete slab shall have a minimum of 3 magnesium anodes. These magnesium anodes shall have an unpackaged weight of 9 pounds. Pipe under concrete slab shall have 1 permanent reference electrodes located where the pipe enters the concrete slab. All conductors shall be routed to a test station.

d. Valves: Each valve shall be protected with 2 magnesium anodes. The magnesium anode shall have an unpackaged weight of 9 pounds.

e. Metallic Pipe Component or Section: Each section or individual joint of metallic pipe shall be protected with 3 magnesium anodes. The magnesium anodes shall have an unpackaged weight of 9 pounds.

f. Connectors or Change-of-Direction Devices: Each

change-of-direction device shall be protected with 2 magnesium anodes. The magnesium anode shall have an unpackaged weight of 9 pounds.

1.3.13 Metallic Component Coating

Coatings for metallic components shall be as required for metallic fittings as indicated. This will include fire hydrants, T's, elbows, valves, etc. Coatings shall be selected, applied, and inspected in accordance with NACE RP0190 and as specified in these specifications.

PART 2 PRODUCTS

2.1 MAGNESIUM ANODES

The minimum anode requirements are shown on the Contract Drawings. See Paragraph METALLIC COMPONENTS AND TYPICALS for additional anodes under slab.

2.1.1 Anode Composition

Anodes shall be of high-potential magnesium alloy, made of primary magnesium obtained from sea water or brine, and not made from scrap metal. Magnesium anodes shall conform to ASTM B 843 and to the following analysis (in percents) otherwise indicated:

Aluminum, max.	0.010
Manganese, max.	0.50 to 1.30
Zinc	0.05
Silicon, max.	0.05
Copper, max.	0.02
Nickel, max.	0.001
Iron, Max.	0.03
Other impurities, max.	0.05 each or 0.3 max. total
Magnesium	Remainder

The Contractor shall furnish, upon request, spectrographic analysis on samples from each heat or batch of anodes used on this project.

2.1.2 Dimensions and Weights

Dimensions and weights of anodes shall be approximately as follows:

TYPICAL MAGNESIUM ANODE SIZE

(Cross sections may be round, square, or D shaped)

NOMINAL WT. LBS.	APPROX. SIZE (IN)	NOMINAL GROSS WT lb PACKAGED IN BACKFILL	NOMINAL PACKAGE DIMENSIONS (IN)
3	3 X 3 X 5	8	5-1/4 X 5-1/4 X 8
5	3 X 3 X 8	13	5-1/4 X 5-1/4 X 11-1/4
9	3 X 3 X 14	27	5-1/4 X 20
12	4 X 4 X 12	32	7-1/2 X 18
17	4 X 4 X 17	45	7-1/2 X 24
32	5 X 5 X 20-1/2	68	8-1/2 X 28
50	7 X 7 X 16	100	10 X 24

2.1.3 Packaged Anodes

Anodes shall be provided in packaged form with the anode surrounded by specially-prepared quick-wetting backfill and contained in a water permeable cloth or paper sack. Anodes shall be centered by means of spacers in the backfill material. The backfill material shall have the following composition, unless otherwise indicated:

Material	Approximate Percent by Weight
Gypsum	75
Bentonite	20
Sodium Sulphate	5
Total	100

2.1.4 Connecting Wire

Wires shall consist of solid or stranded copper wire with RHW-USE or polyethylene insulation.

2.1.4.1 Wire Requirements

Wire shall be No. 12 AWG solid copper wire, not less than 5 feet long, unspliced, complying with NFPA 70, Type THHN/THWN insulation. Connecting wires for magnesium anodes shall be factory installed with the place or emergence from the anode in a cavity sealed flush with a dielectric sealing compound.

2.1.4.2 Anode Header Cable

Cable for anode header and distribution shall be No. 8 AWG stranded copper wire with type CP high molecular weight polyethylene, 7/64 inch thick insulation, 600-volt rating, in accordance with NEMA WC 5.

2.2 MISCELLANEOUS MATERIALS

2.2.1 Electrical Wire

Wire shall be No. 8 AWG stranded copper wire with NFPA 70, Type Polyethylene insulation. Polyethylene insulation shall comply with the requirements of ASTM D 1248 and shall be of the following types, classes, and grades:

High-molecular weight polyethylene shall be Type I, Class C, Grade E5.

High-density polyethylene shall be Type III, Class C, Grade E3.

2.2.1.1 Wire Splicing

Connecting wire splicing shall be made with copper compression connectors or exothermic welds, following instructions of the manufacturer. Single split-bolt connections shall not be used. Sheaths for encapsulating electrical wire splices to be buried underground shall fit the insulated wires entering the spliced joints and epoxy potting compound shall be as specified below. An electrical tape wrap used for covering the splice will consist of two layers of rubber tape, covered by two layers of vinyl tape.

2.2.1.2 Test Wires

Test wires shall be AWG No. 12 stranded copper wire with NFPA 70, Type THHN/THWN or RHW or polyethylene insulation.

2.2.2 Conduit

Rigid galvanized steel conduit and accessories shall conform to UL 6. Non metallic conduit shall conform to NEMA TC 2.

2.2.3 Test Boxes and Junctions Boxes

Boxes shall be outdoor type conforming to UL 514A.

2.2.4 Joint, Patch, Seal, and Repair Coating

Sealing and dielectric compound shall be a black, rubber based compound that is soft, permanently pliable, tacky, moldable, and unbacked. Compound shall be applied as recommended by the manufacturer, but not less than 1/2-inch thick. Coating compound shall be cold-applied coal-tar base mastic. Pressure-sensitive vinyl plastic electrical tape shall conform to UL 510.

2.2.5 Backfill Shields

Shields shall consist of approved pipeline wrapping or fiberglass-reinforced, coal-tar impregnated tape, or plastic weld caps, specifically made for the purpose and installed in accordance with the manufacturer's recommendations.

2.2.6 Epoxy Potting Compound

Compound for encapsulating electrical wire splices to be buried underground shall be a two package system made for the purpose.

2.2.7 Test Stations

Stations shall be of the flush-curb-box type and shall be the standard product of a recognized manufacturer. Test stations shall be complete with an insulated terminal block having the required number of terminals. The test station shall be provided with a lockable cover and shall have an embossed legend, "C.P. Test." A minimum number of test stations shall be provided as indicated on the contract drawings. A minimum of five (5) terminals shall be provided in each test station. A minimum of two (2) leads are required to the metallic pipe from each test station. Other conductors shall be provided for each anode, other foreign pipe, and reference cells as required. Test stations may be constructed of nonmetallic materials. However, if nonmetallic materials are utilized, as a minimum, the materials shall be resistant to damage from ultraviolet radiation, contain good color retention qualities, contain high strength qualities, and be resistant to accidental or vandalistic impacts that might be normally encountered in the environment for which they are to be installed. The test stations shall be listed for the particular application for which they are to be utilized.

2.2.8 Joint and Continuity Bonds

Bonds shall be provided across all joints in the metallic water lines, across any electrically discontinuous connections and all other pipes and structures with other than welded or threaded joints that are included in this cathodic protection system. Unless otherwise specified in the

specifications, bonds between structures and across joints in pipe with other than welded or threaded joints shall be No. 8 AWG stranded copper cable with polyethylene insulation. Bonds between structures shall contain sufficient slack for any anticipated movement between structures. Bonds across pipe joints shall contain a minimum of 4 inches of slack to allow for pipe movement and soil stress. Bonds shall be attached by exothermic welding. Exothermic weld areas shall be insulated with coating compound and approved, and witnessed by the Contracting Officer. Continuity bonds shall be installed as necessary to reduce stray current interference. Additional joint bondings shall be accomplished by the Contractor where the necessity is discovered during construction or testing or where the Contracting Officer's representative directs that such bonding be done. Joint bonding shall include all associated excavation and backfilling. There shall be a minimum of two (2) continuity bonds between each structure and other than welded or threaded joints. The Contractor shall test for electrical continuity across all joints with other than welded or threaded joints and across all metallic portions or components. The Contractor shall provide bonding as required and as specified above until electrical continuity is achieved. Bonding test data shall be submitted for approval.

2.2.9 Electrical Isolation of Structures

As a minimum, isolating flanges or unions shall be provided at the following locations:

a. Connection of new metallic piping or components to existing piping.

b. Pressure piping under floor slab to a building.

Isolation shall be provided at metallic connection of all lines to existing system and where connecting to a building. Additionally, isolation shall be provided between water line and foreign pipes that cross the new lines within 10 feet. Isolation fittings, including isolating flanges and couplings, shall be installed aboveground or in a concrete pit.

2.2.9.1 Insulating Joint Testing

A Model 601 Insulation Checker, as manufactured by "Gas Electronics", or an approved equal, shall be used for insulating joint (flange) electrical testing.

2.2.10 Underground Structure Coating

This coating specification shall take precedence over any other project specification and drawing notes, whether stated or implied, and shall also apply to the pipeline or tank supplier. No variance in coating quality shall be allowed by the Contractor or Base Construction Representative without the written consent of the designer. All underground metallic pipelines and tanks to be cathodically protected shall be afforded a good quality factory-applied coating. This includes all carbon steel, cast-iron and ductile-iron pipelines or vessels. Coatings shall be selected, applied, and inspected in accordance with NACE RP0190 and as specified. If non-metallic pipelines are installed, all metallic fittings on pipe sections shall be coated in accordance with this specification section.

a. The nominal thickness of the metallic pipe joint or other component coating shall be 16 mils, plus or minus 5 percent.

b. Pipe and joint coating for factory applied or field repair material shall be applied as recommended by the manufacturer and shall be one of the following:

(1) Continuously extruded polyethylene and adhesive coating system.
(2) Polyvinyl chloride pressure-sensitive adhesive tape.
(3) High density polyethylene/bituminous rubber compound tape.
(4) Butyl rubber tape.
(5) Coal tar epoxy.

2.2.10.1 Field Joints

All field joints shall be coated with materials compatible with the pipeline coating compound. The joint coating material shall be applied to an equal thickness as the pipeline coating. Unbonded coatings shall not be used on these buried metallic components. This includes the elimination of all unbonded polymer wraps or tubes. Once the pipeline or vessel is set in the trench, an inspection of the coating shall be conducted. This inspection shall include electrical holiday detection. Any damaged areas of the coating shall be properly repaired. The Contracting Officer shall be asked to witness inspection of the coating and testing using a holiday detector.

2.2.10.2 Inspection of Pipe Coatings

Any damage to the protective covering during transit and handling shall be repaired before installation. After field coating and wrapping has been applied, the entire pipe shall be inspected by an electric holiday detector with impressed current in accordance with NACE RP0188 using a full-ring, spring-type coil electrode. The holiday detector shall be equipped with a bell, buzzer, or other type of audible signal which sounds when a holiday is detected. All holidays in the protective covering shall be repaired immediately upon detection. Occasional checks of holiday detector potential will be made by the Contracting Officer's representative to determine suitability of the detector. All labor, materials, and equipment necessary for conducting the inspection shall be furnished by the Contractor.

a. Protective covering for aboveground piping system: Finish painting shall conform to the applicable paragraph of SECTION: 09900, PAINTING, GENERAL, and as follows:

b. Ferrous surfaces: Shop-primed surfaces shall be touched-up with ferrous metal primer. Surfaces that have not been shop-primed shall be solvent-cleaned. Surfaces that contain loose rust, loose mil scale, and other foreign substances shall be mechanically-cleaned by power wire-brushing and primed with ferrous metal primer. Primed surface shall be finished with two (2) coats of exterior oil paint and vinyl paint. Coating for each entire piping service shall be an approved pipe line wrapping having a minimum coating resistance of 50,000 Ohms per square foot.

2.2.11 Electrical Connections

Electrical connections shall be done as follows:

a. Exothermic welds shall be "Caldweld", " Burndy", "Thermoweld" or an approved equal. Use of this material shall be in strict accordance with the manufacturer's recommendations.

b. Electrical-shielded arc welds shall be approved for use on steel pipe by shop drawing submittal action.

c. Brazing shall be as specified in Paragraph: LEAD WIRE CONNECTIONS.

2.2.12 Electrical Tape

Pressure-sensitive vinyl plastic electrical tape shall conform to UL 510.

2.2.13 Permanent Reference Electrodes

Permanent reference electrodes shall be Cu-CuS04 electrodes suitable for direct burial. Electrodes shall be guaranteed by the supplier for 15 years' service in the environment in which they shall be placed. Electrodes shall be installed directly beneath pipe, or metallic component.

2.2.14 Casing

Where a pipeline is installed in a casing under a roadway or railway, the pipeline shall be electrically insulated from the casing, and the annular space sealed and filled with an approved corrosion inhibiting product against incursion of water.

PART 3 EXECUTION

3.1 CRITERIA OF PROTECTION

Acceptance criteria for determining the adequacy of protection on a buried underground metallic component shall be in accordance with NACE RP0169 and as specified below.

3.1.1 Iron and Steel

The following method (b) shall be used for testing cathodic protection voltages. If more than one method is required, method (a) shall be used.

a. A negative voltage of at least minus 850 millivolts as measured between the underground component and a saturated copper-copper sulphate reference electrode connecting the earth (electrolyte) directly over the underground component. Determination of this voltage shall be made with the cathodic protection system in operation. Voltage drops shall be considered for valid interpretation of this voltage measurement. A minimum of minus 850 millivolts "instant off" potential between the underground component being tested and the reference cell shall be achieved over 95 percent of the area of the structure. Adequate number of measurements shall be obtained over the entire structure, pipe, tank, or other metallic component to verify and record achievement of minus 850 millivolts "instant off." This potential shall be obtained over 95 percent of the total metallic area without the "instant off" potential exceeding 1200 millivolts.

b. A minimum polarization voltage shift of 100 millivolts as measured between the underground component and a saturated copper-copper sulphate reference electrode contacting the earth directly over the underground component. This polarization voltage shift shall be determined by interrupting the protective current and measuring the polarization decay. When the protective current is interrupted, an immediate voltage shift will occur. The voltage reading, after the immediate shift, shall be

used as the base reading from which to measure polarization decay. Measurements achieving 100 millivolts decay shall be made over 95 percent of the metallic surface being protected.

c. For any metallic component, a minimum of four (4) measurements shall be made using subparagraph (a), above, and achieving the "instant off" potential of minus 850 millivolts or a polarization shift of 100 millivolts more negative relative to baseline structure-to-soil voltage potential. Two (2) measurements shall be made over the anodes and two (2) measurements shall be made at different locations near the component and farthest away from the anode.

3.2 ANODE STORAGE AND INSTALLATION

3.2.1 Anode Storage

Storage area for magnesium anodes will be designated by the Contracting Officer. If anodes are not stored in a building, tarps or similar protection should be used to protect anodes from inclement weather. Packaged anodes, damaged as a result of improper handling or being exposed to rain, shall be resacked by the Contractor and the required backfill added.

3.2.2 Anode Installation

Unless otherwise authorized, installation shall not proceed without the presence of the Contracting Officer. Anodes of the size specified shall be installed to the depth indicated and at the locations shown. Locations may be changed to clear obstructions with the approval of the Contracting Officer. Anodes shall be installed in sufficient number and of the required type, size, and spacing to obtain a uniform current distribution over the surface of the structure. The anode system shall be designed for a life of 25 years of continuous operation. Anodes shall be installed as indicated in a dry condition after any plastic or waterproof protective covering has been completely removed from the water permeable, permanent container housing the anode metal. The anode connecting wire shall not be used for lowering the anode into the hole. The annular space around the anode shall be backfilled with fine earth in 6 inch layers and each layer shall be hand tamped. Care must be exercised not to strike the anode or connecting wire with the tamper. Approximately 5 gallons of water shall be applied to each filled hole after anode backfilling and tamping has been completed to a point about 6 inches above the anode. After the water has been absorbed by the earth, backfilling shall be completed to the ground surface level.

3.2.2.1 Single Anodes

Single anodes, spaced as shown, shall be connected through a test station to the pipeline, allowing adequate slack in the connecting wire to compensate for movement during backfill operation.

3.2.2.2 Groups of Anodes

Groups of anodes, in quantity and location shown, shall be connected to an anode header cable. The anode header cable shall make contact with the structure to be protected only through a test station. Anode lead connection to the anode header cable shall be made by an approved crimp connector or exothermic weld and splice mold kit with appropriate potting

compound.

3.2.2.3 Welding Methods

Connections to ferrous pipe and metallic fittings shall be made by exothermic weld methods manufactured for the type of pipe or fittings supplied. Electric arc welded connections and other types of welded connections to ferrous pipe and structures shall be approved before use.

3.2.3 Anode Placement - General

Packaged anodes shall be installed completely dry, and shall be lowered into holes by rope sling or by grasping the cloth gather. The anode lead wire shall not be used in lowering the anodes. The hole shall be backfilled with fine soil in 6 inch layers and each layer shall be hand-tamped around the anode. Care must be exercised not to strike the anode or lead wire with the tamper. If immediate testing is to be performed, water shall be added only after backfilling and tamping has been completed to a point 6 inches above the anode. Approximately 2 gallons of water may be poured into the hole. After the water has been absorbed by the soil, backfilling and tamping may be completed to the top of the hole. Anodes shall be installed as specified or shown. In the event a rock strata is encountered prior to achieving specified augered-hole depth, anodes may be installed horizontally to a depth at least as deep as the bottom of the pipe, with the approval of the Contracting Officer.

3.2.4 Underground Pipeline

Anodes shall be installed at a minimum of 3 feet and a maximum of 10 feet from the line to be protected.

3.2.5 Installation Details

Details shall conform to the requirements of this specification. Details shown on the drawings are indicative of the general type of material required, and are not intended to restrict selection to material of any particular manufacturer.

3.2.6 Lead Wire Connections

3.2.6.1 Underground Pipeline (Metallic)

To facilitate periodic electrical measurements during the life of the sacrificial anode system and to reduce the output current of the anodes, if required, all anode lead wires shall be connected to a test station and buried a minimum of 24 inches in depth. The cable shall be No. 12 AWG, stranded copper, polyethylene, THHN/THWN or RHW-USE insulated cable. The cable shall make contact with the structure only through a test station. Resistance wire shall be installed between the cable and the pipe cable, in the test station, to reduce the current output, if required. Anode connections, except in the test station, shall be made with exothermic welding process, and shall be insulated by means of at least three (3) layers of electrical tape; and all lead wire connections shall be installed in a moistureproof splice mold kit and filled with epoxy resin. Lead wire-to-structure connections shall be accomplished by an exothermic welding process. All welds shall be in accordance with the manufacturer's recommendations. A backfill shield filled with a pipeline mastic sealant or material compatible with the coating shall be placed over the weld connection and shall be of such diameter as to cover the exposed metal

adequately.

3.2.7 Location of Test Stations

Test stations shall be of the type and location shown and shall be curb box mounted. Buried insulating joints shall be provided with test wire connections brought to a test station. Test stations shall be mounted directly over the pipe or fitting, unless otherwise shown on the Contract Drawings.

3.2.8 Underground Pipe Joint Bonds

Underground pipe having other than welded or threaded coupling joints shall be made electrically continuous by means of a bonding connection installed across the joint.

3.3 ELECTRICAL ISOLATION OF STRUCTURES

3.3.1 Isolation Joints and Fittings

Isolating fittings, including main line isolating flanges and couplings, shall be installed aboveground, or within manholes, wherever possible. Where isolating joints must be covered with soil, they shall be fitted with a paper joint cover specifically manufactured for covering the particular joint, and the space within the cover filled with hot coal-tar enamel. Isolating fittings in lines entering buildings shall be located at least 12 inches above grade of floor level, when possible. Isolating joints shall be provided with grounding cells to protect against over-voltage surges or approved surge protection devices. The cells shall provide a low resistance across isolating joint without excessive loss of cathodic current.

3.4 TRENCHING AND BACKFILLING

Trenching and backfilling shall be in accordance with Section 02316 EXCAVATION, TRENCHING, AND BACKFILLING FOR UTILITY SYSTEMS.

3.5 TESTS AND MEASUREMENTS

3.5.1 Baseline Potentials

Each test and measurement will be witnessed by the Contracting Officer. The Contractor shall notify the Contracting Officer a minimum of five (5) working days prior to each test. After backfill of the underground metallic component and anodes is completed, but before the anodes are connected to the underground component, the static potential-to-soil of the component shall be measured. The locations of these measurements shall be identical to the locations specified for component to-reference electrode potential measurements. The initial measurements shall be recorded.

3.5.2 Isolation Testing

Before the anode system is connected to the underground component, an isolation test shall be made at each isolating joint or fitting. This test shall demonstrate that no metallic contact, or short circuit exists between the two isolated sections of the pipe. Any isolating fittings installed and found to be defective shall be reported to the Contracting Officer.

3.5.2.1 Insulation Checker

A Model 601 insulation checker, as manufactured by "Gas Electronics", or an approved equal, using the continuity check circuit, shall conform to the manufacturer's operating instructions. Test shall be witnessed by the Contracting Officer. An isolating joint that is good will read full scale on the meter. If an isolating joint is shorted, the meter pointer will be deflected or near zero on the meter scale. Location of the fault shall be determined from the instructions, and the joint shall be repaired. If an isolating joint is located inside a vault, the pipe shall be sleeved with insulator when entering and leaving the vault.

3.5.2.2 Cathodic Protection Meter

A Model HD110 multimeter, as manufactured by Beckman, a Model 77 multimeter, as manufactured by Fluke, a model DM 383 multimeter, as manufactured by UEI or an approved equal, using the continuity check circuit, shall be used for isolating joint (flange) electrical testing. This test shall be performed in addition to the Model 601 insulation checker. Continuity is checked across the isolation joint after the test lead wire is shorted together and the meter adjusted to scale. A full-scale deflection indicates the system is shorted at some location. The Model 601 verifies that the particular insulation under test is good and the Model HD110/Model 77/Model DM 383 verifies that the system is isolated. If the system is shorted, further testing shall be performed to isolate the location of the short.

3.5.3 Anode Output

As the anodes or groups of anodes are connected to the underground component, current output shall be measured with an approved clamp-on milliammeter, calibrated shunt with a suitable millivoltmeter or multimeter, or a low resistance ammeter. (Of the three methods, the low-resistance ammeter is the least desirable and most inaccurate. The clamp-on milliammeter is the most accurate.) The valves obtained and the date, time, and location shall be recorded.

3.5.4 Reference Electrode Potential Measurements

Upon completion of the installation and with the entire cathodic protection system in operation, electrode potential measurements shall be made using a copper-copper sulphate reference electrode and a potentiometer-voltmeter, or a direct-current voltmeter having an internal resistance (sensitivity) of not less than 10 megohms per volt and a full scale of 10 volts. The locations of these measurements shall be identical to the locations used for baseline potentials. The values obtained and the date, time, and locations of measurements shall be recorded. No less than eight (8) measurements shall be made over any length of line or component. Additional measurements shall be made at each distribution service riser, with the reference electrode placed directly over the service line.

3.5.5 Location of Measurements

3.5.5.1 Piping or Conduit

For coated piping or conduit, measurements shall be taken from the reference electrode located in contact with the earth, directly over the pipe. Connection to the pipe shall be made at service risers, valves, test leads, or by other means suitable for test purposes. Pipe-to-soil potential measurements shall be made at intervals not exceeding 50 feet.

The Contractor may use a continuous pipe-to-soil potential profile in lieu of 5 foot interval pipe-to-soil potential measurements. For metallic piping, additional measurements shall be made at each distribution service riser, with the reference electrode placed directly over the service line adjacent to the riser. Potentials shall be plotted versus distance to an approved scale. Locations where potentials do not meet or exceed the criteria shall be identified and reported to the Contracting Officer's representative.

3.5.5.2 Casing Tests

Before final acceptance of the installation, the electrical separation of carrier pipe from casings shall be tested and any short circuits corrected.

3.5.5.3 Holiday Test

Any damage to the protective covering during transit and handling shall be repaired before installation. After field-coating and wrapping has been applied, the entire pipe shall be inspected by an electric holiday detector with impressed current in accordance with NACE RP0188 using a full-ring, spring-type coil electrode. The holiday detector shall be equipped with a bell, buzzer, or other type of audible signal which sounds when a holiday is detected. Holidays in the protective covering shall be repaired upon detection. Occasional checks of holiday detector potential will be made by the Contracting Officer to determine suitability of the detector. Labor, materials, and equipment necessary for conducting the inspection shall be furnished by the Contractor. The coating system shall be inspected for holes, voids, cracks, and other damage during installation.

3.5.5.4 Recording Measurements

All pipe-to-soil potential measurements, including initial potentials where required, shall be recorded. The Contractor shall locate, correct and report to the Contracting Officer any short circuits to foreign pipes encountered during checkout of the installed cathodic protection system. Pipe-to-soil potential measurements shall be taken on as many pipes as necessary to determine the extent of protection or to locate short-circuits.

3.6 TRAINING COURSE

The Contractor shall conduct a training course for the operating staff as designated by the Contracting Officer. The training period shall consist of a total of 4 hours of normal working time and shall start after the system is functionally completed but prior to final acceptance tests. The field instructions shall cover all of the items contained in the operating and maintenance instructions, as well as demonstrations of routine maintenance operations, including testing procedures included in the maintenance instructions. At least 14 days prior to date of proposed conduction of the training course, the training course curriculum shall be submitted for approval, along with the proposed training date. Training shall consist of demonstration of test equipment, providing forms for test data and the tolerances which indicate that the system works.

3.7 CLEANUP

The Contractor shall be responsible for cleanup of the construction site. All paper bags, wire clippings, etc., shall be disposed of as directed. Paper bags, wire clippings and other waste shall not be put in bell holes or anodes excavation.

3.8 MISCELLANEOUS INSTALLATION AND TESTING

3.8.1 Coatings

All aboveground pipeline shall be coated as indicated or as approved. The coating shall have a minimum thickness of 7 mil. The pipeline coating shall be in accordance with all applicable Federal, State, and local regulations.

3.8.2 Excavation

In the event rock is encountered in providing the required depth for anodes, the Contractor shall determine an alternate approved location and, if the depth is still not provided, an alternate plan shall be submitted to the Contracting Officer. Alternate techniques and depths must be approved prior to implementation.

3.9 SPARE PARTS

After approval of shop drawings, and not later than three (3) months prior to the date of beneficial occupancy, the Contractor shall furnish spare parts data for each different item of material and equipment specified. The data shall include a complete list of parts, special tools, and supplies, with current unit prices and source of supply. In addition, the Contractor shall supply information for material and equipment replacement for all other components of the complete system, including anodes, cables, splice kits and connectors, corrosion test stations, and any other components not listed above. The Contractor shall furnish a reference cell on a reel with 350 feet of conductor, along with other accessories, and a digital voltmeter that can be used in the maintenance of this cathodic protection system. Use of this equipment shall be demonstrated in actual tests during the training course, which shall include a description of the the equipment and measurement of the pipe-to-soil potential, rainfall, and gas company voltages.

3.10 SEEDING

Seeding shall be done by the Contractor, as directed, in all unsurfaced locations disturbed by this construction. In areas where grass cover exists, it is possible that sod can be carefully removed, watered, and stored during construction operations, and replaced after the operations are completed since it is estimated that no section of pipeline should remain uncovered for more than two (2) days. The use of sod in lieu of seeding shall require approval by the Contracting Officer.

3.11 SYSTEM TESTING

The Contractor shall submit a report including potential measurements taken at adequately-close intervals to establish that minus 850 millivolts potential, "instant-off" potential, or a polarization shift of 100 millivolts more negative relative to baseline structure-to-soil voltage potential is provided, and that the cathodic protection is not providing interference to other foreign pipes causing damage to paint or pipes. The report shall provide a narrative describing how the criteria of protection is achieved without damaging other pipe or structures in the area.

3.12 CLEARING OF TREES AND UNDERBRUSH

In the areas of the anode beds, all trees and underbrush shall be cleared and grubbed to the limits shown or indicated.

-- End of Section --

SECTION 13930

WET PIPE SPRINKLER SYSTEM, FIRE PROTECTION
11/99

PART 1 GENERAL

1.1 REFERENCES

The publications listed below form a part of this specification to the extent referenced. The publications are referred to in the text by basic designation only.

AMERICAN SOCIETY FOR TESTING AND MATERIALS (ASTM)

ASTM A 47/A 47M	(1999) Ferritic Malleable Iron Castings
ASTM A 53/A 53M	(1999b) Pipe, Steel, Black and Hot-Dipped, Zinc-Coated, Welded and Seamless
ASTM A 135	(1997c) Electric-Resistance-Welded Steel Pipe
ASTM A 183	(1983; R 1998) Carbon Steel Track Bolts and Nuts
ASTM A 536	(1984; R 1999el) Ductile Iron Castings
ASTM A 795	(1997) Black and Hot-Dipped Zinc-Coated (Galvanized) Welded and Seamless Steel Pipe for Fire Protection Use

ASME INTERNATIONAL (ASME)

ASME B16.1	(1998) Cast Iron Pipe Flanges and Flanged Fittings
ASME B16.3	(1998) Malleable Iron Threaded Fittings
ASME B16.4	(1998) Cast Iron Threaded Fittings
ASME B16.9	(1993) Factory-Made Wrought Steel Buttwelding Fittings
ASME B16.11	(1996) Forged Fittings, Socket-Welding and Threaded
ASME B16.21	(1992) Nonmetallic Flat Gaskets for Pipe Flanges
ASME B18.2.1	(1996) Square and Hex Bolts and Screws (Inch Series)
ASME B18.2.2	(1987; R 1993) Square and Hex Nuts (Inch Series)

AMERICAN WATER WORKS ASSOCIATION (AWWA)

AWWA C104	(1995) Cement-Mortar Lining for Ductile-Iron Pipe and Fittings for Water
AWWA C110	(1998) Ductile-Iron and Gray-Iron Fittings, 3 In. Through 48 In. (75 mm through 1200 mm), for Water and Other Liquids
AWWA C111	(1995) Rubber-Gasket Joints for Ductile-Iron Pressure Pipe and Fittings
AWWA C151	(1996) Ductile-Iron Pipe, Centrifugally Cast, for Water or Other Liquids
AWWA C203	(1997; addenda C203a - 1999) Coal-Tar Protective Coatings and Linings for Steel Water Pipelines - Enamel and Tape - Hot-Applied

FACTORY MUTUAL ENGINEERING AND RESEARCH (FM)

FM P7825a	(1998) Approval Guide Fire Protection
FM P7825b	(1998) Approval Guide Electrical Equipment

MANUFACTURERS STANDARDIZATION SOCIETY OF THE VALVE AND FITTINGS INDUSTRY (MSS)

MSS SP-71	(1997) Gray Iron Swing Check Valves, Flanges and Threaded Ends

NATIONAL FIRE PROTECTION ASSOCIATION (NFPA)

NFPA 13	(1999) Installation of Sprinkler Systems
NFPA 24	(1995) Installation of Private Fire Service Mains and Their Appurtenances
NFPA 1963	(1998) Fire Hose Connections

UNDERWRITERS LABORATORIES (UL)

UL 668	(1995; Rev thru Dec 1998) Hose Valves For Fire Protection Service
UL Bld Mat Dir	(1999) Building Materials Directory
UL Fire Prot Dir	(1999) Fire Protection Equipment Directory

1.2 GENERAL REQUIREMENTS

Wet pipe sprinkler system shall be provided in areas indicated on the drawings. The sprinkler system shall provide fire sprinkler protection for the indicated areas. Except as modified herein, each system shall be designed and installed in accordance with NFPA 13. Pipe sizes which are not indicated on drawings shall be determined by hydraulic calculation. The Contractor shall design any portions of the sprinkler systems that are not indicated on the drawings including locating sprinklers, piping and

equipment, and size piping and equipment when this information is not indicated on the drawings or is not specified herein. The design of the sprinkler systems shall be based on hydraulic calculations, and the other provisions specified herein.

1.2.1 Hydraulic Design

Each system shall be hydraulically designed to discharge the minimum density of gpm per square foot over the hydraulically most demanding square feet of floor area as indicated on the drawings. The minimum pipe size for branch lines in gridded systems shall be 1-1/4 inch. Hydraulic calculations shall be in accordance with the Area/Density Method of NFPA 13. Water velocity in the piping shall not exceed 20 ft/s in aboveground piping or 10 ft/s in below ground piping.

1.2.1.1 Hose Demand

Interior and exterior hose stream allowances shall be added to the sprinkler system demand as indicated on the drawings.

1.2.1.2 Basis for Calculations

The design of each system shall be based upon the water supply indicated on the drawings with a static pressure, flow and residual pressure as indicated on the drawings. Water supply shall be presumed available at the base of the riser unless otherwise indicated. Hydraulic calculations shall be based upon the Hazen-Williams formula with a "C" value of 120 for steel piping, and 100 for existing underground piping.

1.2.2 Sprinkler Spacing

Sprinklers shall be uniformly spaced on branch lines. Maximum spacing per sprinkler shall not exceed limits specified in NFPA 13.

1.3 COORDINATION OF TRADES

Piping offsets, fittings, and any other accessories required shall be furnished as required to provide a complete installation and to eliminate interference with other construction. Sprinkler shall be installed over and under ducts, piping and platforms when such equipment can negatively effect or disrupt the sprinkler discharge pattern and coverage.

1.4 DELIVERY AND STORAGE

All equipment delivered and placed in storage shall be housed in a manner to preclude any damage from the weather, humidity and temperature variations, dirt and dust, or other contaminants. Additionally, all pipes shall either be capped or plugged until installed.

1.5 FIELD MEASUREMENTS

The Contractor shall become familiar with all details of the work, verify all dimensions in the field, and shall advise the Contracting Officer of any discrepancy before performing the work.

1.6 SUBMITTALS

Government approval is required for submittals with a "G" designation; submittals not having a "G" designation are for information only. When

used, a designation following the "G" designation identifies the office that will review the submittal for the Government. The following shall be submitted in accordance with Section 01330 SUBMITTAL PROCEDURES::

SD-02 Shop Drawings

Sprinkler System Shop Drawings; G

Three copies of the Sprinkler System Shop Drawings, no later than 21 days prior to the start of sprinkler system installation. The Sprinkler System Shop Drawings shall conform to the requirements established for working plans as prescribed in NFPA 13. Drawings shall include plan and elevation views demonstrating that the equipment will fit the allotted spaces with clearance for installation and maintenance. Each set of drawings shall include the following:

a. Descriptive index of drawings in the submittal with drawings listed in sequence by drawing number. A legend identifying device symbols, nomenclature, and conventions used.

b. Floor plans drawn to a scale not less than 1/8" = 1'-0" which clearly show locations of sprinklers, risers, pipe hangers, seismic separation assemblies, sway bracing, inspector's test connections, drains, and other applicable details necessary to clearly describe the proposed arrangement. Each type of fitting used and the locations of bushings, reducing couplings, and welded joints shall be indicated.

c. Actual center-to-center dimensions between sprinklers on branch lines and between branch lines; from end sprinklers to adjacent walls; from walls to branch lines; from sprinkler feed mains, cross-mains and branch lines to finished floor and roof or ceiling. A detail shall show the dimension from the sprinkler and sprinkler deflector to the ceiling in finished areas.

d. Longitudinal and transverse building sections showing typical branch line and cross-main pipe routing as well as elevation of each typical sprinkler above finished floor.

e. Details of each type of riser assembly; pipe hanger; and restraint of underground water main at point-of-entry into the building, and electrical devices and interconnecting wiring.

SD-03 Product Data

Load Calculations for Sizing Sway Bracing; G

For systems that are required to be protected against damage from earthquakes, load calculations shall be provided for sizing of sway bracing.

Components and Equipment Data; G

Manufacturer's catalog data included with the Sprinkler System Drawings for all items specified herein. The data shall be highlighted to show model, size, options, etc., that are intended for consideration. Data shall be adequate to demonstrate compliance with all contract requirements. In addition, a complete

equipment list that includes equipment description, model number and quantity shall be provided.

Hydraulic Calculations; G

Hydraulic calculations, including a drawing showing hydraulic reference points and pipe segments.

Spare Parts; G

Spare parts data shall be included for each different item of material and equipment specified. The data shall include a complete list of parts and supplies, with current unit prices and source of supply, and a list of parts recommended by the manufacturer to be replaced after 1 year and 3 years of service. A list of special tools and test equipment required for maintenance and testing of the products supplied by the Contractor shall be included.

Preliminary Tests; G

Proposed date and time to begin Preliminary Tests of piping and system components. Notification shall be provided at least 7 days prior to the proposed start of tests.

Final Acceptance Test Procedures; G.

Proposed procedures for Final Acceptance Test, no later than 14 days prior to the proposed start of the tests.

Final Acceptance Test; G

Proposed date and time to begin Final Acceptance Test, submitted with the Final Acceptance Test Procedures. Notification shall be provided at least 14days prior to the proposed start of the test. Notification shall include a copy of the Contractor's Material & Test Certificates.

Fire Protection Specialist Qualifications; G

The name and documentation of certification of the proposed Fire Protection Specialist.

Sprinkler System Installer Qualifications; G

The name and documentation of certification of the proposed Sprinkler System Installer, concurrent with submittal of the Fire Protection Specialist Qualifications.

SD-06 Test Reports

Final Acceptance Test Report; G

Three copies of the completed Final Acceptance Tests Reports, no later that 7 days after the completion of the Final Acceptance Tests. All items in the Final Acceptance Report shall be signed by the Fire Protection Specialist.

SD-07 Certificates

Fire Protection Specialist Inspection; G

Concurrent with the Final Acceptance Test Report, certification by the Fire Protection Specialist that the sprinkler system is installed in accordance with the contract requirements, including signed approval of the Preliminary and Final Acceptance Test Reports.

SD-10 Operation and Maintenance Data; G

Operations and maintenance data shall be provided for all equipment, components and items of work specified herein where standard data is routinely and commercially available by the manufacturer. Submit in accordance with Section 01781 OPERATIONS AND MAINTENANCE DATA.

1.7 HYDRAULIC CALCULATIONS

Hydraulic calculations shall be as outlined in NFPA 13 except that calculations shall be performed by computer using software intended specifically for fire protection system design using the design data shown on the drawings. Software that uses k-factors for typical branch lines is not acceptable. Calculations shall be based on the water supply data shown on the drawings. Calculations shall substantiate that the design area used in the calculations is the most demanding hydraulically. Water supply curves and system requirements shall be plotted on semi-logarithmic graph paper so as to present a summary of the complete hydraulic calculation. A summary sheet listing sprinklers in the design area and their respective hydraulic reference points, elevations, actual discharge pressures and actual flows shall be provided. Elevations of hydraulic reference points (nodes) shall be indicated. Documentation shall identify each pipe individually and the nodes connected thereto. The diameter, length, flow, velocity, friction loss, number and type fittings, total friction loss in the pipe, equivalent pipe length and Hazen-Williams coefficient shall be indicated for each pipe. For gridded systems, calculations shall show peaking of demand area friction loss to verify that the hydraulically most demanding area is being used. Also for gridded systems, a flow diagram indicating the quantity and direction of flows shall be included. A drawing showing hydraulic reference points (nodes) and pipe designations used in the calculations shall be included and shall be independent of shop drawings.

1.8 FIRE PROTECTION SPECIALIST

Work specified in this section shall be performed under the supervision of and certified by the Fire Protection Specialist. The Fire Protection Engineer shall be an individual who meets one of the following conditions:

a) An engineer having a Bachelor of Science or Master of Science Degree in Fire protection Engineering from an accredited university engineering program, plus a minimum of 5 years' work experience in fire protection engineering.

b) A registered professional engineer (P.E.) who has passed the National Council of Examiners for Engineering and Surveys (NCEE) fire protection engineering written examination.

c) A registered P.E. in a related engineering discipline with a minimum of 5 years' experience dedicated to fire protection engineering.

The Fire Protection Specialist shall be regularly engaged in the design and installation of the type and complexity of system specified in the Contract documents, and shall have served in a similar capacity for at least three systems that have performed in the manner intended for a period of not less than 6 months.

1.9 SPRINKLER SYSTEM INSTALLER QUALIFICATIONS

Work specified in this section shall be performed by the Sprinkler System Installer. The Sprinkler System Installer shall be regularly engaged in the installation of the type and complexity of system specified in the Contract documents, and shall have served in a similar capacity for at least three systems that have performed in the manner intended for a period of not less than 6 months.

1.10 REGULATORY REQUIREMENTS

Compliance with referenced NFPA standards is mandatory. This includes advisory provisions listed in the appendices of such standards, as though the word "shall" had been substituted for the word "should" wherever it appears. In the event of a conflict between specific provisions of this specification and applicable NFPA standards, this specification shall govern. Reference to "authority having jurisdiction" shall be interpreted to mean the Contracting Officer.

PART 2 PRODUCTS

2.1 STANDARD PRODUCTS

Materials and equipment shall be standard products of a manufacturer regularly engaged in the manufacture of such products and shall essentially duplicate items that have been in satisfactory use for at least 2 years prior to bid opening.

2.2 NAMEPLATES

All equipment shall have a nameplate that identifies the manufacturer's name, address, type or style, model or serial number, and catalog number.

2.3 REQUIREMENTS FOR FIRE PROTECTION SERVICE

Materials and Equipment shall have been tested by Underwriters Laboratories, Inc. and listed in UL Fire Prot Dir or approved by Factory Mutual and listed in FM P7825a and FM P7825b. Where the terms "listed" or "approved" appear in this specification, such shall mean listed in UL Fire Prot Dir or FM P7825a and FM P7825b

2.4 UNDERGROUND PIPING COMPONENTS

2.4.1 Pipe

Piping from a point 6 inches above the floor to a point 5 feet outside the building wall shall be ductile iron with a rated working pressure of 175 psi conforming to AWWA C151, with cement mortar lining conforming to AWWA C104. Piping more than 5 feet outside the building walls shall comply with Section 02510 WATER DISTRIBUTION SYSTEM.

2.4.2 Fittings and Gaskets

Fittings shall be ductile iron conforming to AWWA C110. Gaskets shall be suitable in design and size for the pipe with which such gaskets are to be used. Gaskets for ductile iron pipe joints shall conform to AWWA C111.

2.5 ABOVEGROUND PIPING COMPONENTS

Aboveground piping shall be steel.

2.5.1 Steel Piping Components

2.5.1.1 Steel Pipe

Except as modified herein, steel pipe shall be black or galvanized where indicated as permitted by NFPA 13 and shall conform to applicable provisions of ASTM A 795, ASTM A 53/A 53M, or ASTM A 135. Pipe in which threads or grooves are cut shall be Schedule 40 or shall be listed by Underwriters' Laboratories to have a corrosion resistance ratio (CRR) of 1.0 or greater after threads or grooves are cut. Pipe shall be marked with the name of the manufacturer, kind of pipe, and ASTM designation.

2.5.1.2 Fittings for Non-Grooved Steel Pipe

Fittings shall be cast iron conforming to ASME B16.4, steel conforming to ASME B16.9 or ASME B16.11, or malleable iron conforming to ASME B16.3. Steel press fittings shall be approved for fire protection systems. Galvanized fittings shall be used for piping systems or portions of piping systems utilizing galvanized piping. Fittings into which sprinklers, drop nipples or riser nipples (sprigs) are screwed shall be threaded type. Plain-end fittings with mechanical couplings, fittings that use steel gripping devices to bite into the pipe and segmented welded fittings shall not be used.

2.5.1.3 Grooved Mechanical Joints and Fittings

Joints and fittings shall be designed for not less than 175 psi service and shall be the product of the same manufacturer. Fitting and coupling houses shall be malleable iron conforming to ASTM A 47/A 47M, Grade 32510; ductile iron conforming to ASTM A 536, Grade 65-45-12. Gasket shall be the flush type that fills the entire cavity between the fitting and the pipe. Nuts and bolts shall be heat-treated steel conforming to ASTM A 183 and shall be cadmium plated or zinc electroplated.

2.5.1.4 Flanges

Flanges shall conform to NFPA 13 and ASME B16.1. Gaskets shall be non-asbestos compressed material in accordance with ASME B16.21, 1/16 inch thick, and full face or self-centering flat ring type. Bolts shall be squarehead conforming to ASME B18.2.1 and nuts shall be hexagon type conforming to ASME B18.2.2.

2.5.2 Pipe Hangers

Hangers shall be listed in UL Fire Prot Dir or FM P7825a and FM P7825b and of the type suitable for the application, construction, and pipe type and sized to be supported.

2.5.3 Valves

2.5.3.1 Control Valve and Gate Valve

Manually operated sprinkler control valve and gate valve shall be outside stem and yoke (OS&Y) type and shall be listed in UL Bld Mat Dir or FM P7825a and FM P7825b.

2.5.3.2 Check Valve

Check valve 2 inches and larger shall be listed in UL Bld Mat Dir or FM P7825a and FM P7825b. Check valves 4 inches and larger shall be of the swing type with flanged cast iron body and flanged inspection plate, shall have a clear waterway and shall meet the requirements of MSS SP-71, for Type 3 or 4.

2.5.3.3 Riser Check Valve

Wet system riser check valve shall be rubber-faced check valve approved for use in fire service systems. Valve shall have ductile iron body, brass seat, and a rubber-faced clapper assembly hinged to a removable access cover. Valves shall have flanged ends. Provide tapped openings for drain connection and inlet and outlet pressure gauges. Within the shotgun riser, the riser check valve shall function as a double check backflow preventer.

2.5.3.4 Hose Valve

Valve shall comply with UL 668 and shall have a minimum rating of 300 psi. Valve shall be non-rising stem, all bronze, 90 degree angle type, with 2-1/2 inch American National Standard Fire Hose Screw Thread (NH) male outlet in accordance with NFPA 1963. Hose valve shall be provided with 2-1/2 to 1-1/2 inch reducer. Hose valves shall be equipped with lugged cap with drip drain, cap gasket and chain. Valve finish shall be polished brass.

2.6 ALARM INITIATING AND SUPERVISORY DEVICES

2.6.1 Sprinkler Waterflow Indicator Switch, Vane Type

Switch shall be vane type with a pipe saddle and cast aluminum housing. The electro-mechanical device shall include a flexible, low-density polyethylene paddle conforming to the inside diameter of the fire protection pipe. The device shall sense water movements and be capable of detecting a sustained flow of 10 gpm or greater. The device shall contain a retard device adjustable from 0 to 90 seconds to reduce the possibility of false alarms caused by transient flow surges. The switch shall be tamper resistant and contain two SPDT (Form C) contacts arranged to transfer upon removal of the housing cover, and shall be equipped with a silicone rubber gasket to assure positive water seal and a dustproof cover and gasket to seal the mechanism from dirt and moisture.

2.7 FIRE DEPARTMENT CONNECTION

Fire department connection shall be projecting type with cast brass body, matching wall escutcheon lettered "Auto Spkr" with a polished brass finish. The connection shall have two inlets with individual self-closing clappers, caps with drip drains and chains. Female inlets shall have 2-1/2 inch diameter American National Fire Hose Connection Screw Threads (NH) per NFPA 1963.

2.8 SPRINKLERS

Sprinklers with internal O-rings shall not be used. Sprinklers shall be used in accordance with their listed spacing limitations. Temperature classification shall be as indicated. Sprinklers in high heat areas including attic spaces or in close proximity to unit heaters shall have temperature classification in accordance with NFPA 13. Orifice of extended coverage sprinklers shall not exceed 17/32 inch.

2.8.1 Concealed Sprinkler

Concealed sprinkler shall be chrome-plated, quick-response type and shall have a nominal 1/2 inch or 17/32 inch orifice.

2.8.2 Recessed Sprinkler

Upright sprinkler shall be chrome-plated, quick-response type and shall have a nominal 1/2 inch or 17/32 inch orifice.

2.8.3 Flush Sprinkler

Flush sprinkler shall be chrome-plated quick-response type and shall have a nominal 1/2 inch or 17/32 inch orifice.

2.8.4 Pendent Sprinkler

Pendent sprinkler shall be of the fusible strut or glass bulb type, quick-response type with nominal 1/2 inch or 17/32 inch orifice. Pendent sprinklers shall have a polished chrome finish.

2.8.5 Upright Sprinkler

Upright sprinkler shall be brass quick-response type and shall have a nominal 1/2 inch or 17/32 inch orifice.

2.8.6 Sidewall Sprinkler

Sidewall sprinkler shall have a nominal 1/2 inch orifice. Sidewall sprinkler shall have a polished chrome finish. Sidewall sprinkler shall be the quick-response type.

2.8.7 Dry Sprinkler Assembly

Dry sprinkler assembly shall be of the pendent type as indicated. Assembly shall include an integral escutcheon. Maximum length shall not exceed maximum indicated in UL Fire Prot Dir. Sprinklers shall have a polished chrome finish.

2.9 ACCESSORIES

2.9.1 Sprinkler Cabinet

Spare sprinklers shall be provided in accordance with NFPA 13 and shall be packed in a suitable metal or plastic cabinet. Spare sprinklers shall be representative of, and in proportion to, the number of each type and temperature rating of the sprinklers installed. At least one wrench of each type required shall be provided.

2.9.2 Pendent Sprinkler Escutcheon

Escutcheon shall be one-piece metallic type with a depth of less than 3/4 inch and suitable for installation on pendent sprinklers. The escutcheon shall have a factory finish that matches the pendent sprinkler heads.

2.9.3 Pipe Escutcheon

Escutcheon shall be polished chromium-plated zinc alloy, or polished chromium-plated copper alloy. Escutcheons shall be either one-piece or split-pattern, held in place by internal spring tension or set screw.

2.9.4 Sprinkler Guard

Guard shall be a steel wire cage designed to encase the sprinkler and protect it from mechanical damage. Guards shall be provided on sprinklers located as indicated.

2.9.5 Identification Sign

Valve identification sign shall be minimum 6 inches wide x 2 inches high with enamel baked finish on minimum 18 gauge steel or 0.024 inch aluminum with red letters on a white background or white letters on red background. Wording of sign shall include, but not be limited to "main drain," "auxiliary drain," "inspector's test," "alarm test," "alarm line," and similar wording as required to identify operational components.

2.9.6 Surge Arrester

Surge arrester shall be installed above each riser check valve in each wet system riser. Surge arrester shall have 10 gallon capacity and shall be UL and FM approved with a rated working pressure not less than 275 psig. Each surge arrester shall have a 3 inch flanged connection on the bottom and an internal bladder made of Buna-Nitrite.

2.10 MISCELLANEOUS

Sprinkler system shop drawings, load calculations for sizing sway bracing, components and equipment data, spare parts data, Final Acceptance Test, Final Acceptance test report and Final Acceptance Test procedures shall be submitted according to 1.6 SUBMITTALS.

PART 3 EXECUTION

3.1 FIRE PROTECTION RELATED SUBMITTALS

The Fire Protection Specialist shall prepare a list of the submittals from the Contract Submittal Register that relate to the successful installation of the sprinkler systems(s). The submittals identified on this list shall be accompanied by a letter of approval signed and dated by the Fire Protection Specialist when submitted to the Government.

3.2 INSTALLATION REQUIREMENTS

The installation shall be in accordance with the applicable provisions of NFPA 13, NFPA 24 and publications referenced therein. .

3.3 INSPECTION BY FIRE PROTECTION SPECIALIST

The Fire Protection Specialist shall inspect the sprinkler system periodically during the installation to assure that the sprinkler system is being provided and installed in accordance with the contract requirements. The Fire Protection Specialist shall witness the preliminary and final tests, and shall sign the test results. The Fire Protection Specialist, after completion of the system inspections and a successful final test, shall certify in writing that the system has been installed in accordance with the contract requirements. Any discrepancy shall be brought to the attention of the Contracting Officer in writing, no later than three working days after the discrepancy is discovered. The Fire Protection Specialist Inspection report shall be submitted in accordance with 1.6 SUBMITTALS.

3.4 ABOVEGROUND PIPING INSTALLATION

3.4.1 Piping in Exposed Areas

Exposed piping shall be installed so as not to diminish exit access widths, corridors or equipment access. Exposed horizontal piping, including drain piping, shall be installed to provide maximum headroom.

3.4.2 Piping in Finished Areas

In areas with suspended or dropped ceilings and in areas with concealed spaces above the ceiling, piping shall be concealed above ceilings. Piping shall be inspected, tested and approved before being concealed. Risers and similar vertical runs of piping in finished areas shall be concealed.

3.4.3 Pendent Sprinklers

Drop nipples to pendent sprinklers shall consist of minimum 1 inch pipe with a reducing coupling into which the sprinkler shall be threaded. Hangers shall be provided on arm-overs to drop nipples supplying pendent sprinklers when the arm-over exceeds 12 inches. Where sprinklers are installed below suspended or dropped ceilings, drop nipples shall be cut such that sprinkler ceiling plates or escutcheons are of a uniform depth throughout the finished space. The outlet of the reducing coupling shall not extend more than 1 inch below the underside of the ceiling. On pendent sprinklers installed below suspended or dropped ceilings, the distance from the sprinkler deflector to the underside of the ceiling shall not exceed 4 inches. Recessed pendent sprinklers shall be installed such that the distance from the sprinkler deflector to the underside of the ceiling shall not exceed the manufacturer's listed range and shall be of uniform depth throughout the finished area.

3.4.3.1 Pendent Sprinkler Locations

Pendent sprinklers in suspended ceilings shall be centered in the ceiling grid.

3.4.4 Upright Sprinklers

Riser nipples or "sprigs" to upright sprinklers shall contain no fittings between the branch line tee and the reducing coupling at the sprinkler. Riser nipples exceeding 30 inches in length shall be individually supported.

3.4.5 Pipe Joints

Pipe joints shall conform to NFPA 13, except as modified herein. Not more

than four threads shall show after joint is made up. Welded joints will be permitted, only if welding operations are performed as required by NFPA 13 at the Contractor's fabrication shop, not at the project construction site. Flanged joints shall be provided where indicated or required by NFPA 13. Grooved pipe and fittings shall be prepared in accordance with the manufacturer's latest published specification according to pipe material, wall thickness and size. Grooved couplings and fittings shall be from the same manufacturer.

3.4.6 Reducers

Reductions in pipe sizes shall be made with one-piece tapered reducing fittings. The use of grooved-end or rubber-gasketed reducing couplings will not be permitted. When standard fittings of the required size are not manufactured, single bushings of the face type will be permitted. Where used, face bushings shall be installed with the outer face flush with the face of the fitting opening being reduced. Bushings shall not be used in elbow fittings, in more than one outlet of a tee, in more than two outlets of a cross, or where the reduction in size is less than 1/2 inch.

3.4.7 Pipe Penetrations

Cutting structural members for passage of pipes or for pipe-hanger fastenings will not be permitted. Pipes that must penetrate concrete or masonry walls or concrete floors shall be core-drilled and provided with pipe sleeves. Each sleeve shall be Schedule 40 galvanized steel, ductile iron or cast iron pipe and shall extend through its respective wall or floor and be cut flush with each wall surface. Sleeves shall provide required clearance between the pipe and the sleeve per NFPA 13. The space between the sleeve and the pipe shall be firmly packed with mineral wool insulation. Where pipes penetrate fire walls, fire partitions, or floors, pipes shall be fire stopped in accordance with Section 07840 FIRESTOPPING. In penetrations that are not fire-rated or not a floor penetration, the space between the sleeve and the pipe shall be sealed at both ends with plastic waterproof cement that will dry to a firm but pliable mass or with a mechanically adjustable segmented elastomer seal.

3.4.8 Escutcheons

Escutcheons shall be provided for pipe penetration of ceilings and walls. Escutcheons shall be securely fastened to the pipe at surfaces through which piping passes.

3.4.9 Inspector's Test Connection

Unless otherwise indicated, test connection shall consist of 1 inch pipe connected to the remote branch line; a test valve located approximately 7 feet above the floor; a smooth bore brass outlet equivalent to the smallest orifice sprinkler used in the system; and a painted metal identification sign affixed to the valve with the words "Inspector's Test." The discharge orifice shall be located outside the building wall directed so as not to cause damage to adjacent construction or landscaping during full flow discharge.

3.4.10 Drains

Main drain piping shall be provided to discharge at a safe point outside the building. Auxiliary drains shall be provided as indicated and as required by NFPA 13. When the capacity of trapped sections of pipe is less

than 3 gallons, the auxiliary drain shall consist of a valve not smaller than 1/2 inch and a plug or nipple and cap. When the capacity of trapped sections of piping is more than 3 gallons, the auxiliary drain shall consist of two 1 inch valves and one 2 x 12 inch condensate nipple or equivalent, located in an accessible location. Tie-in drains shall be provided for multiple adjacent trapped branch pipes and shall be a minimum of 1 inch in diameter. Tie-in drain lines shall be pitched a minimum of 1/2 inch per 10 feet.

3.4.11 Installation of Fire Department Connection

Connection shall be mounted on the exterior wall approximately 3 feet above finished grade. The piping between the connection and the check valve shall be provided with an automatic drip in accordance with NFPA 13 and arranged to drain to the outside.

3.4.12 Identification Signs

Signs shall be affixed to each control valve, inspector test valve, main drain, auxiliary drain, test valve, and similar valves as appropriate or as required by NFPA 13. Hydraulic design data nameplates shall be permanently affixed to each sprinkler riser as specified in NFPA 13.

3.5 UNDERGROUND PIPING INSTALLATION

The fire protection water main shall be laid, and joints anchored, in accordance with NFPA 24. Minimum depth of cover shall be 3 feet. The supply line shall terminate inside the building with a flanged piece, the bottom of which shall be set not less than 6 inches above the finished floor. A blind flange shall be installed temporarily on top of the flanged piece to prevent the entrance of foreign matter into the supply line. A concrete thrust block shall be provided at the elbow where the pipe turns up toward the floor. In addition, joints shall be anchored in accordance with NFPA 24 using pipe clamps and steel rods from the elbow to the flange above the floor and from the elbow to a pipe clamp in the horizontal run of pipe. Buried steel components shall be provided with a corrosion protective coating in accordance with AWWA C203. Piping more than 5 feet outside the building walls shall meet the requirements of Section 02510 WATER DISTRIBUTION SYSTEM.

3.6 EARTHWORK

Earthwork shall be performed in accordance with applicable provisions of Section 02315 EXCAVATION, FILLING AND BACKFILLING FOR BUILDINGS.

3.7 ELECTRICAL WORK

Except as modified herein, electric equipment and wiring shall be in accordance with Section 16415 ELECTRICAL WORK, INTERIOR. Alarm signal wiring connected to the building fire alarm control system shall be in accordance with Section 16721 FIRE DETECTION AND ALARM SYSTEM. All wiring for supervisory and alarm circuits shall be #14 AWG solid copper installed in metallic tubing or conduit. Wiring color code shall remain uniform throughout the system.

3.8 PIPE COLOR CODE MARKING

Color code marking of piping shall be as specified in Section 09900 PAINTING, GENERAL.

3.9 PRELIMINARY TESTS

The system, including the underground water mains, and the aboveground piping and system components, shall be tested to assure that equipment and components function as intended. The underground and aboveground interior piping systems and attached appurtenances subjected to system working pressure shall be tested in accordance with NFPA 13 and NFPA 24. Upon completion of specified tests, the Contractor shall complete certificates as specified in paragraph SUBMITTALS.

3.9.1 Underground Piping

3.9.1.1 Flushing

Underground piping shall be flushed in accordance with NFPA 24. This includes the requirement to flush the lead-in connection to the fire protection system at a flow rate not less that the calculated maximum water demand rate of the system.

3.9.1.2 Hydrostatic Testing

New underground piping shall be hydrostatically tested in accordance with NFPA 24. The allowable leakage shall be measured at the specified test pressure by pumping from a calibrated container. The amount of leakage at the joints shall not exceed 2 quarts per hour per 100 gaskets or joints, regardless of pipe diameter.

3.9.2 Aboveground Piping

3.9.2.1 Hydrostatic Testing

Aboveground piping shall be hydrostatically tested in accordance with NFPA 13 at not less than 200 psi or 50 psi in excess of maximum system operating pressure and shall maintain that pressure without loss for 2 hours. There shall be no drop in gauge pressure or visible leakage when the system is subjected to the hydrostatic test. The test pressure shall be read from a gauge located at the low elevation point of the system or portion being tested.

3.9.2.2 Backflow Prevention Assembly Forward Flow Test

Each backflow prevention assembly shall be tested at system flow demand, including all applicable hose streams, as specified in NFPA 13. The Contractor shall provide all equipment and instruments necessary to conduct a complete forward flow test, including 2.5 inch diameter hoses, playpipe nozzles, calibrated pressure gauges, and pitot tube gauge. The Contractor shall provide all necessary supports to safely secure hoses and nozzles during the test. At the system demand flow, the pressure readings and pressure drop (friction) across the assembly shall be recorded. A metal placard shall be provided on the backflow prevention assembly that lists the pressure readings both upstream and downstream of the assembly, total pressure drop, and the system test flow rate. The pressure drop shall be compared to the manufacturer's data. If pressure drop exceeds manufacturer's published pressure drop, hydraulic calculations shall be modified as required to include measured pressure drop.

3.9.3 Testing of Alarm Devices

Each alarm switch shall be tested by flowing water through the inspector's test connection. Each water-operated alarm devices shall be tested to verify proper operation.

3.9.4 Main Drain Flow Test

Following flushing of the underground piping, a main drain test shall be made to verify the adequacy of the water supply. Static and residual pressures shall be recorded on the certificate specified in paragraph SUBMITTALS. In addition, a main drain test shall be conducted each time after a main control valve is shut and opened.

3.10 FINAL ACCEPTANCE TEST

Final Acceptance Test shall begin only when the Preliminary Test Report has been approved. The Fire Protection Specialist shall conduct the Final Acceptance Test and shall provide a complete demonstration of the operation of the system. This shall include operation of control valves and flowing of inspector's test connections to verify operation of associated waterflow alarm switches. After operation of control valves has been completed, the main drain test shall be repeated to assure that control valves are in the open position. In addition, the representative shall have available copies of as-built drawings and certificates of tests previously conducted. The installation shall not be considered accepted until identified discrepancies have been corrected and test documentation is properly completed and received.

3.11 ON-SITE TRAINING

The Fire Protection Specialist shall conduct a training course for operating and maintenance personnel as designated by the Contracting Officer. Training shall be provided for a period of 4 hours of normal working time and shall start after the system is functionally complete but prior to the Preliminary Tests and Final Acceptance Test. The On-Site Training shall cover all of the items contained in the approved Operating and Maintenance Instructions.

-- End of Section --

SECTION 15070

SEISMIC/FORCE PROTECTION FOR MECHANICAL EQUIPMENT
04/99

PART 1 GENERAL

1.1 REFERENCES

The publications listed below form a part of this specification to the extent referenced. The publications are referred to in the text by basic designation only.

U.S. ARMY CORPS OF ENGINEERS (USACE)

TI 809-04	(1998) Seismic Design for Buildings

SHEET METAL & AIR CONDITIONING CONTRACTORS' NATIONAL ASSOCIATION (SMACNA)

SMACNA Seismic Restraint Mnl	(1998) Seismic Restraint Manual Guidelines for Mechanical Systems

1.2 SYSTEM DESCRIPTION

1.2.1 General Requirements

The requirements for seismic protection measures described in this section shall be applied to the mechanical equipment and systems listed below. Seismic/force protection requirements shall apply to the Flight Kitchen Facility. Structural requirements shall be in accordance with Section 13080 SEISMIC PROTECTION FOR MISCELLANEOUS EQUIPMENT.

1.2.2 Mechanical Systems

The following mechanical systems shall be installed as required on the drawings and other sections of these specifications and shall be seismically protected in accordance with this specification:

All Piping Inside the Building Except as Specifically Stated Below Under "Items Not Covered By This Section".
All Water Supply Systems
Ductwork

1.2.3 Contractor Designed Bracing

The Contractor shall design the bracing in accordance with TI 809-04 and additional data furnished by the Contracting Officer. Loadings shall be as specified in Section 13080 - SEISMIC PROTECTION FOR MISCELLANEOUS EQUIPMENT. Resistance to lateral forces shall be accomplished without consideration of friction resulting from gravity loads. Loadings determined using TI 809-04 are based on strength design; therefore, the AISC LRFD Specifications shall be used for the design. The bracing for all mechanical equipment and systems shall be developed by the Contractor.

1.2.4 Items Not Covered By This Section

1.2.4.1 Fire Protection Systems

Seismic protection of piping for fire protection systems shall be installed as specified in Section 13930 WET PIPE SPRINKLER SYSTEM, FIRE PROTECTION.

1.2.4.2 Items Requiring No Seismic Restraints

Seismic restraints are not required for components which weigh less than 30 pounds as per Department of Defense Antiterrorism Construction Standards. Interior piping and ducts shall be seismically protected in accordance with the provisions of this specification.

1.3 SUBMITTALS

Government approval is required for submittals with a "G" designation; submittals not having a "G" designation are for information only. When used, a designation following the "G" designation identifies the office that will review the submittal for the Government. The following shall be submitted in accordance with Section 01330 SUBMITTAL PROCEDURES:

SD-02 Shop Drawings

Bracing; G
Contractor Designed Bracing; G

Detail drawings along with catalog cuts, templates, and erection and installation details, as appropriate, for the items listed. Submittals shall be complete in detail; shall indicate thickness, type, grade, class of metal, and dimensions; and shall show construction details, reinforcement, anchorage, and installation with relation to the building construction.

SD-03 Product Data

Bracing; G
Copies of the design calculations with the detail drawings. Calculations shall be stamped by a registered engineer and shall verify the capability of structural members to which bracing is attached for carrying the load from the brace.

Contractor Designed Bracing; G

Copies of the design calculations with the drawings. Calculations shall be approved, certified, stamped and signed by a registered Professional Engineer. Calculations shall verify the capability of structural members to which bracing is attached for carrying the load from the brace.

PART 2 PRODUCTS

2.1 SWAY BRACING MATERIALS

Sway bracing materials (e.g. rods, plates, rope, angles, etc.) shall be as specified in Section 13080 SEISMIC PROTECTION FOR MISCELLANEOUS EQUIPMENT.

PART 3 EXECUTION

3.1 BRACING

Provisions of this paragraph apply to all piping within a 5 foot line around outside of building unless buried in the ground. Piping grouped for support on trapeze-type hangers shall be braced at the same intervals as determined by the smallest diameter pipe of the group. Bracing rigidly attached to pipe flanges, or similar, shall not be used where it would interfere with thermal expansion of piping.

3.2 PIPE SLEEVES

Pipe sleeves in interior non-fire rated walls shall be sized as indicated on the drawings to provide clearances that will permit differential movement of piping without the piping striking the pipe sleeve. Pipe sleeves in fire rated walls shall conform to the requirements in Section 07840 FIRESTOPPING.

3.3 SPREADERS

Spreaders shall be provided between adjacent piping runs to prevent contact during seismic activity whenever pipe or insulated pipe surfaces are less than 4 inches apart. Spreaders shall be applied at same interval as sway braces at an equal distance between the sway braces. If rack type hangers are used where the pipes are restrained from contact by mounting to the rack, spreaders are not required for pipes mounted in the rack. Spreaders shall be applied to surface of bare pipe and over insulation on insulated pipes utilizing high-density inserts and pipe protection shields in accordance with the requirements of Section 15080THERMAL INSULATION FOR MECHANICAL SYSTEMS.

3.4 SWAY BRACES FOR PIPING

Sway braces shall be provided to prevent movement of the pipes under seismic loading. Braces shall be provided in both the longitudinal and transverse directions, relative to the axis of the pipe. The bracing shall not interfere with thermal expansion requirements for the pipes as described in other sections of these specifications.

3.4.1 Transverse Sway Bracing

Transverse sway bracing for steel and copper pipe shall be provided as specified in Section 13080 SEISMIC PROTECTION FOR MISCELLANEOUS EQUIPMENT. All runs (length of pipe between end joints) shall have a minimum of two transverse braces. Transverse sway bracing for pipes of materials other than steel and copper shall be provided at intervals not to exceed the hanger spacing as specified in Section 15400 PLUMBING, GENERAL PURPOSE.

3.4.2 Longitudinal Sway Bracing

Longitudinal sway bracing shall be provided at 40 foot intervals unless otherwise indicated. All runs (length of pipe between end joints) shall have one longitudinal brace minimum. Sway braces shall be constructed in accordance with the drawings. Branch lines, walls, or floors shall not be used as sway braces.

3.4.3 Vertical Runs

Run is defined as length of pipe between end joints. Vertical runs of piping shall be braced at not more than 10 foot vertical intervals. Braces for vertical runs shall be above the center of gravity of the segment being braced. All sway braces shall be constructed in accordance

with the drawings. Sway branches shall not be connected to branch lines, walls, or floors.

3.4.4 Clamps and Hangers

Clamps or hangers on uninsulated pipes shall be applied directly to pipe. Insulated piping shall have clamps or hangers applied over insulation in accordance with Section 15080 THERMAL INSULATION FOR MECHANICAL SYSTEMS.

3.5 SWAY BRACES FOR DUCTS

3.5.1 Braced Ducts

Bracing details and spacing for rectangular and round ducts shall be in accordance with SMACNA Seismic Restraint Mnl, including Appendix E. However, the design seismic loadings for these items shall not be less than loadings obtained using the procedures in TI 809-04.

3.5.2 Unbraced Ducts

Hangers for unbraced ducts shall be attached to the duct within 2 inches of the top of the duct in accordance with SMACNA Seismic Restraint Mnl. Unbraced ducts shall be installed with a 6 inch minimum clearance to vertical ceiling hanger wires.

-- End of Section --

SECTION 15080

THERMAL INSULATION FOR MECHANICAL SYSTEMS
11/99

PART 1 GENERAL

1.1 REFERENCES

The publications listed below form a part of this specification to the extent referenced. The publications are referred to in the text by basic designation only. At the discretion of the Government, the manufacturer of any material supplied will be required to furnish test reports pertaining to any of the tests necessary to assure compliance with the standard or standards referenced in this specification.

AMERICAN SOCIETY FOR TESTING AND MATERIALS (ASTM)

ASTM A 167	(1999) Stainless and Heat-Resisting Chromium-Nickel Steel Plate, Sheet, and Strip
ASTM A 580/A 580M	(1998) Stainless Steel Wire
ASTM B 209	(1996) Aluminum and Aluminum-Alloy Sheet and Plate
ASTM C 195	(1995) Mineral Fiber Thermal Insulating Cement
ASTM C 449/C 449M	(1995) Mineral Fiber Hydraulic-Setting Thermal Insulating and Finishing Cement
ASTM C 518	(1998) Steady-State Heat Flux Measurements and Thermal Transmission Properties by Means of the Heat Flow Meter Apparatus
ASTM C 533	(1995) Calcium Silicate Block and Pipe Thermal Insulation
ASTM C 534	(1999) Preformed Flexible Elastomeric Cellular Thermal Insulation in Sheet and Tubular Form
ASTM C 547	(1995) Mineral Fiber Pipe Insulation
ASTM C 552	(1991) Cellular Glass Thermal Insulation
ASTM C 553	(1992) Mineral Fiber Blanket Thermal Insulation for Commercial and Industrial Applications
ASTM C 591	(1994) Unfaced Preformed Rigid Cellular Polyisocyanurate Thermal Insulation
ASTM C 610	(1995) Molded Expanded Perlite Block and Pipe thermal Insulation

ASTM C 612	(1993) Mineral Fiber Block and Board Thermal Insulation
ASTM C 647	(1995) Properties and Tests of Mastics and Coating Finishes for Thermal Insulation
ASTM C 665	(1998) Mineral-Fiber Blanket Thermal Insulation for Light Frame Construction and Manufactured Housing
ASTM C 795	(1998el) Thermal Insulation for Use in Contact With Austenitic Stainless Steel
ASTM C 916	(1985; R 1996e1) Adhesives for Duct Thermal Insulation
ASTM C 920	(1998) Elastomeric Joint Sealants
ASTM C 921	(1989; R 1996) Determining the Properties of Jacketing Materials for Thermal Insulation
ASTM C 1126	(1998) Faced or Unfaced Rigid Cellular Phenolic Thermal Insulation
ASTM C 1136	(1995) Flexible, Low Permeance Vapor Retarders for Thermal Insulation
ASTM C 1290	(1995) Flexible Fibrous Glass Blanket Insulation Used to Externally Insulate HVAC Ducts
ASTM E 84	(1999) Surface Burning Characteristics of Building Materials
ASTM E 96	(1995) Water Vapor Transmission of Materials

MANUFACTURERS STANDARDIZATION SOCIETY OF THE VALVE AND FITTINGS INDUSTRY (MSS)

MSS SP-69	(1996) Pipe Hangers and Supports - Selection and Application

MIDWEST INSULATION CONTRACTORS ASSOCIATION (MICA)

MICA Insulation Stds	(1993) National Commercial & Industrial Insulation Standards

1.2 SYSTEM DESCRIPTION

Field-applied insulation and accessories on mechanical systems shall be as specified herein; factory-applied insulation is specified under the piping, duct or equipment to be insulated.

1.3 GENERAL QUALITY CONTROL

1.3.1 Standard Products

Materials shall be the standard products of manufacturers regularly engaged in the manufacture of such products and shall essentially duplicate items that have been in satisfactory use for at least 2 years prior to bid opening.

1.3.2 Installer's Qualifications

Qualified installers shall have successfully completed three or more similar type jobs within the last 5 years.

1.3.3 Surface Burning Characteristics

Unless otherwise specified, insulation not covered with a jacket shall have a flame spread index no higher than 75 and a smoke developed index no higher than 150. Insulation systems which are located in air plenums, in ceiling spaces, and in attic spaces shall have a flame spread index no higher than 25 and a smoke developed index no higher than 50. Insulation materials located exterior to the building perimeter are not required to be fire-rated. Flame spread and smoke developed indexes shall be determined by ASTM E 84. Insulation shall be tested in the same density and installed thickness as the material to be used in the actual construction. Material supplied by a manufacturer with a jacket shall be tested as a composite material. Jackets , facings, and adhesives shall have a flame spread index no higher than 25 and a smoke developed index no higher than 50 when tested in accordance with ASTM E 84.

1.3.4 Identification of Materials

Packages or standard containers of insulation, jacket material, cements, adhesives, and coatings delivered for use, and samples required for approval shall have manufacturer's stamp or label attached giving the name of the manufacturer and brand, and a description of the material.

1.4 SUBMITTALS

Government approval is required for submittals with a "G" designation; submittals not having a "G" designation are for information only. When used, a designation following the "G" designation identifies the office that will review the submittal for the Government. The following shall be submitted in accordance with Section 01330 SUBMITTAL PROCEDURES:

SD-04 Samples

Pipe Insulation Materials; G
Duct Insulation Materials; G
Equipment Insulation Materials; G

A complete list of materials, including manufacturer's descriptive technical literature, performance data, catalog cuts, and installation instructions. The product number, k-value, thickness and furnished accessories for each mechanical system requiring insulation shall be included. Materials furnished under this section of the specification shall be submitted at one time.

After approval of materials and prior to applying insulation a booklet shall be prepared and submitted for approval. The booklet shall contain marked-up MICA Insulation Stds plates (or detail drawings showing the insulation material and insulating system)

for each pipe, duct, or piece of equipment required to be insulated per this specification. The MICA plates shall be marked up showing the materials to be installed in accordance with the requirements of this specification for the specific insulation application. The Contractor shall submit all MICA Plates required to show the entire insulating system, including Plates required to show insulation penetrations, vessel bottom and top heads, legs, and skirt insulation as applicable. If the Contractor elects to submit detailed drawings instead of marked-up MICA Plates, the detail drawings shall show cut-away, section views, and details indicating each component of the insulation system and showing provisions for insulating jacketing, and sealing portions of the equipment. For each type of insulation installation on the drawings, provide a label which identifies each component in the installation (i.e., the duct, insulation, adhesive, vapor retarder, jacketing, tape, mechanical fasteners, etc.) Indicate insulation by type and manufacturer. Three copies of the booklet shall be submitted at the jobsite to the Contracting Officer. One copy of the approved booklet shall remain with the insulation Contractor's display sample and two copies shall be provided for Government use.

After approval of materials actual sections of installed systems properly insulated in accordance with the specification requirements shall be displayed. Such actual sections must remain accessible to inspection throughout the job and will be reviewed from time to time for controlling the quality of the work throughout the construction site. Each material used shall be identified, by indicating on an attached sheet the specification requirement for the material and the material by each manufacturer intended to meet the requirement. Display sample sections will be inspected at the jobsite by the Contracting Officer. Approved display sample sections shall remain on display at the jobsite during the construction period. Upon completion of construction, the display sample sections will be closed and sealed.

Pipe Insulation Display Sections: Display sample sections shall include as a minimum an elbow or tee, a valve, dielectric unions and flanges, a hanger with protection shield and insulation insert, or dowel as required, at support point, method of fastening and sealing insulation at longitudinal lap, circumferential lap, butt joints at fittings and on pipe runs, and terminating points for each type of pipe insulation used on the job, and for hot pipelines and cold pipelines, both interior and exterior, even when the same type of insulation is used for these services.

Duct Insulation Display Sections: Display sample sections for rigid and flexible duct insulation used on the job. A display section for duct insulation exposed to weather shall be protected by enclosing with a temporary covering.

1.5 STORAGE

Materials shall be delivered in the manufacturer's unopened containers. Materials delivered and placed in storage shall be provided with protection from weather, humidity, dirt, dust and other contaminants. Insulation material and supplies that become dirty, dusty, wet, or otherwise contaminated may be rejected by the Contracting Officer.

PART 2 PRODUCTS

2.1 GENERAL MATERIALS

Materials shall be compatible and shall not contribute to corrosion, soften, or otherwise attack surfaces to which applied in either the wet or dry state. Materials to be used on stainless steel surfaces shall meet ASTM C 795 requirements. Materials shall be asbestos free and conform to the following:

2.1.1 Adhesives

2.1.1.1 Acoustical Lining Insulation Adhesive

Adhesive shall be a nonflammable, fire-resistant adhesive conforming to ASTM C 916, Type I.

2.1.1.2 Mineral Fiber Insulation Cement

Cement shall be in accordance with ASTM C 195.

2.1.1.3 Lagging Adhesive

Lagging is the material used for thermal insulation, especially around a cylindrical object. This may include the insulation as well as the cloth/material covering the insulation. Lagging adhesives shall be nonflammable and fire-resistant and shall have a flame spread rating no higher than 25 and a smoke developed rating no higher than 50 when tested in accordance with ASTM E 84. Adhesive shall be pigmented white and be suitable for bonding fibrous glass cloth to faced and unfaced fibrous glass insulation board; for bonding cotton brattice cloth to faced and unfaced fibrous glass insulation board; for sealing edges of and bounding fibrous glass tape to joints of fibrous glass board; for bonding lagging cloth to thermal insulation; or for attaching fibrous glass insulation to metal surfaces. Lagging adhesives shall be applied in strict accordance with the manufacturer's recommendations.

2.1.2 Contact Adhesive

Adhesive may be dispersed in a nonhalogenated organic solvent or, dispersed in a nonflammable organic solvent which shall not have a fire point below 200 degrees F. The adhesive shall not adversely affect, initially or in service, the insulation to which it is applied, nor shall it cause any corrosive effect on metal to which it is applied. Any solvent dispersing medium or volatile component of the adhesive shall have no objectionable odor and shall not contain any benzene or carbon tetrachloride. The dried adhesive shall not emit nauseous, irritating, or toxic volatile matters or aerosols when the adhesive is heated to any temperature up to 212 degrees F. The adhesive shall be nonflammable and fire resistant.

2.1.3 Caulking

ASTM C 920, Type S, Grade NS, Class 25, Use A.

2.1.4 Corner Angles

Nominal 0.016 inch aluminum 1 x 1 inch with factory applied kraft backing. Aluminum shall be ASTM B 209, Alloy 3003, 3105, or 5005.

2.1.5 Finishing Cement

Mineral fiber hydraulic-setting thermal insulating cement ASTM C 449/C 449M. All cements that may come in contact with Austenitic stainless steel must include testing per ASTM C 795.

2.1.6 Fibrous Glass Cloth and Glass Tape

Fibrous glass cloth and glass tape shall have flame spread and smoke developed ratings of no greater than 25/50 when measured in accordance with ASTM E 84. Tape shall be 4 inch wide rolls.

2.1.7 Staples

Outward clinching type monel or ASTM A 167, Type 304 or 316 stainless steel. Monel is a nickel rich alloy which has high strength, high ductility, and excellent resistance to corrosion.

2.1.8 Jackets

ASTM C 921, Type I, maximum moisture vapor transmission 0.02 perms, (measured before factory application or installation), minimum puncture resistance 50 Beach units on all surfaces except concealed ductwork, where a minimum puncture resistance of 25 Beach units is acceptable. Minimum tensile strength, 35 pound/inch width. ASTM C 921, Type II, minimum puncture resistance 25 Beach units, tensile strength minimum 20 pound/inch width. Jackets used on insulation exposed in finished areas shall have white finish suitable for painting without sizing. Based on the application, insulation materials which require factory applied jackets are mineral fiber, cellular glass, and phenolic foam. All non-metallic jackets shall have a maximum flame spread index of 25 and a maximum smoke developed index of 50 when tested in accordance with ASTM E 84.

2.1.8.1 White Vapor Retarder All Service Jacket (ASJ)

For use on hot/cold pipes, ducts, or equipment vapor retarder jackets used on insulation exposed in finished areas shall have white finish suitable for painting without sizing.

2.1.8.2 Aluminum Jackets

Aluminum jackets shall be corrugated, embossed or smooth sheet, 0.016 inch nominal thickness; ASTM B 209, Temper H14, Temper H16, Alloy 3003, 5005, or 3105 with factory applied moisture retarder. Corrugated aluminum jacket shall not be used outdoors. Aluminum jacket securing bands shall be Type 304 stainless steel, 0.015 inch thick, 1/2 inch wide for pipe under 12 inch diameter and 3/4 inch wide for pipe over 12 inch and larger diameter. Aluminum jacket circumferential seam bands shall be 2 x 0.016 inch aluminum matching jacket material. Bands for insulation below ground shall be 3/4 x 0.020 inch) thick stainless steel, or fiberglass reinforced tape. The jacket may, at the option of the Contractor, be provided with a factory fabricated Pittsburg or "Z" type longitudinal joint. When the "Z" joint is used, the bands at the circumferential joints shall be designed by the manufacturer to seal the joints and hold the jacket in place.

2.1.8.3 Polyvinyl Chloride (PVC) Jackets

Polyvinyl chloride (PVC) jacket and fitting covers shall have high impact

strength, UV resistant rating or treatment and moderate chemical resistance with minimum thickness 0.030 inch.

2.1.9 Vapor Retarder Coating

The vapor retarder coating shall be fire and water resistant and appropriately selected for either outdoor or indoor service. Color shall be white. The water vapor permeance of the compound shall be determined according to procedure B of ASTM E 96 utilizing apparatus described in ASTM E 96. The coating shall be a nonflammable, fire resistant type. All other application and service properties shall be in accordance with ASTM C 647.

2.1.9.1 Vapor Retarder Required

ASTM C 1136, Type I, maximum moisture vapor transmission 0.02 perms, minimum puncture resistance 50 Beach units on all surfaces except concealed ductwork, where Type II, maximum moisture vapor transmission 0.02 perms, a minimum puncture resistance of 25 Beach units is acceptable.

2.1.9.2 Vapor Retarder Not Required

ASTM C 1136, Type III, maximum moisture vapor transmission 0.10 perms, minimum puncture resistance 50 Beach units on all surfaces except ductwork, where Type IV, maximum moisture vapor transmission 0.10, a minimum puncture resistance of 25 Beach units is acceptable.

2.1.10 Wire

Soft annealed ASTM A 580/A 580M Type 302, 304 or 316 stainless steel, 16 or 18 gauge.

2.2 PIPE INSULATION MATERIALS

Pipe insulation materials shall be limited to those listed herein and shall meet the following requirements:

2.2.1 Aboveground Cold Pipeline

Insulation for minus 30 degrees to plus 60 degrees F for outdoor, indoor, exposed or concealed applications, shall be as follows:

a. Cellular Glass: ASTM C 552, Type II, and Type III. Supply the insulation with manufacturer's recommended factory applied jacket.

b. Flexible Cellular Insulation:ASTM C 534, Type I or II. Type II shall have vapor retarder skin on both sides of the insulation.

c. Phenolic Insulation: ASTM C 1126, Type III. Phenolic insulations shall comply with ASTM C 795 and with the ASTM C 665 paragraph Corrosiveness. Supply the insulation with manufacturer's recommended factory applied jacket.

d. Mineral Fiber: ASTM C 547

e. Polyisocyanurate Insulation: ASTM C 591, type I. Supply the insulation with manufacturer's recommended factory applied jacket.

2.2.2 Aboveground Hot Pipeline

Insulation for above 60 degrees F, for outdoor, indoor, exposed or concealed applications shall meet the following requirements. Supply the insulation with manufacturers recommended factory applied jacket.

a. Mineral Fiber: ASTM C 547, Types I, II or III, supply the insulation with manufacturers recommended factory applied jacket.

b. Calcium Silicate: ASTM C 533, Type I indoor only, or outdoors above 250 degrees F pipe temperature.

c. Cellular Glass: ASTM C 552, Type II and Type III. Supply the insulation with manufacturers recommended factory applied jacket.

d. Flexible Cellular Insulation: ASTM C 534, Type I or II to 200 degrees F service.

e. Phenolic Insulation: ASTM C 1126 Type III to 250 F service shall comply with ASTM C 795. Supply the insulation with manufacturers recommended factory applied jacket.

f. Perlite Insulation: ASTM C 610

g. Polyisocyanurate Insulation: ASTM C 591, Type 1, to 300 degrees F service. Supply the insulation with manufacturer's recommended factory applied jacket.

2.2.3 Below ground Pipeline Insulation

For below ground pipeline insulation the following requirements shall be met.

2.2.3.1 Cellular Glass

ASTM C 552, type II.

2.3 DUCT INSULATION MATERIALS

Duct insulation materials shall be limited to those listed herein and shall meet the following requirements:

2.3.1 Rigid Mineral Fiber

ASTM C 612, Type IA, IB, II, III, & IV.

2.3.2 Flexible Mineral Fiber

ASTM C 553, Type I,or Type II up to 250 F. ASTM C 1290 Type III.

2.3.3 Cellular Glass

ASTM C 552, Type I.

2.3.4 Phenolic Foam

ASTM C 1126 Type II, shall comply with ASTM C 795.

2.3.5 Flexible Cellular

ASTM C 534 Type II.

2.3.6 Polyisocyanurate

ASTM C 591, Type 1. Supply the insulation with manufacturer's recommended factory applied jacket.

2.4 EQUIPMENT INSULATION MATERIALS

Equipment insulation materials shall be limited to those listed herein and shall meet the following requirements:

2.4.1 Cold Equipment Insulation

For temperatures below 60 degrees F.

2.4.1.1 Cellular Glass

ASTM C 552, Type I, Type III, or Type IV as required.

2.4.1.2 Flexible Cellular Insulation

ASTM C 534, Type II.

2.4.1.3 Phenolic Foam

ASTM C 1126 Type II shall comply with ASTM C 795.

2.4.1.4 Polyisocyanurate Foam

ASTM C 591, Type I. Supply the insulation with manufacturer's factory applied jacket.

2.4.2 Hot Equipment Insulation

For temperatures above 60 degrees F.

2.4.2.1 Rigid Mineral Fiber

ASTM C 612, Type IA, IB, II, III, IV, or V as required for temperature encountered to 1800 degrees F.

2.4.2.2 Flexible Mineral Fiber

ASTM C 553, Type I, II, III, IV, V, VI or VII as required for temperature encountered to 1200 degrees F.

2.4.2.3 Calcium Silicate

ASTM C 533, Type I, indoors only, or outdoors above 250 degrees F. Pipe shape may be used on diesel engine exhaust piping and mufflers to 1200 degrees F.

2.4.2.4 Cellular Glass

ASTM C 552, Type I, Type III, or Type IV as required.

2.4.2.5 Flexible Cellular Insulation

ASTM C 534, Type II, to 200 degrees F.

2.4.2.6 Phenolic Foam

ASTM C 1126 Type II to 250 degrees F shall comply with ASTM C 795.

2.4.2.7 Molded Expanded Perlite

ASTM C 610.

2.4.2.8 Polyisocyanurate Foam:

ASTM C 591, Type I. Supply the insulation with manufacturer's recommended factory applied jacket.

PART 3 EXECUTION

3.1 APPLICATION - GENERAL

3.1.1 Installation

Except as otherwise specified, material shall be installed in accordance with the manufacturer's written instructions. Insulation materials shall not be applied until tests and heat tracing specified in other sections of this specification are completed. Material such as rust, scale, dirt and moisture shall be removed from surfaces to receive insulation. Insulation shall be kept clean and dry. Insulation shall not be removed from its shipping containers until the day it is ready to use and shall be returned to like containers or equally protected from dirt and moisture at the end of each workday. Insulation that becomes dirty shall be thoroughly cleaned prior to use. If insulation becomes wet or if cleaning does not restore the surfaces to like new condition, the insulation will be rejected, and shall be immediately removed from the jobsite. Joints shall be staggered on multi layer insulation. Mineral fiber thermal insulating cement shall be mixed with demineralized water when used on stainless steel surfaces. Insulation, jacketing and accessories shall be installed in accordance with MICA Insulation Stds standard plates except where modified herein or on the drawings.

3.1.2 Firestopping

Where pipes and ducts pass through fire walls, fire partitions, above grade floors, and fire rated chase walls, the penetration shall be sealed with fire stopping materials as specified in Section 07840 FIRESTOPPING.

3.1.3 Painting and Finishing

Painting shall be as specified in Section 09900 PAINTING, GENERAL.

3.1.4 Installation of Flexible Cellular Insulation

Flexible cellular insulation shall be installed with seams and joints sealed with a contact adhesive. Flexible cellular insulation shall not be used on surfaces greater than 200 degrees F. Seams shall be staggered when applying multiple layers of insulation. Insulation exposed to weather and not shown to have jacketing shall be protected with two coats of UV resistant finish as recommended by the manufacturer after the adhesive is dry.

3.1.5 Welding

No welding shall be done on piping, duct or equipment without written approval of the Contracting Officer. The capacitor discharge welding process may be used for securing metal fasteners to duct.

3.1.6 Pipes/Ducts/Equipment which Require Insulation

Insulation is required on all pipes, ducts, or equipment, except for omitted items, as specified.

3.2 PIPE INSULATION INSTALLATION

3.2.1 Pipe Insulation

3.2.1.1 General

Pipe insulation shall be installed on aboveground hot and cold pipeline systems as specified below to form a continuous thermal retarder, including straight runs, fittings and appurtenances unless specified otherwise. Installation shall be with full length units of insulation and using a single cut piece to complete a run. Cut pieces or scraps abutting each other shall not be used. Pipe insulation shall be omitted on the following:

a. Pipe used solely for fire protection, except fire protection piping installed outdoors.

b. Chromium plated pipe to plumbing fixtures. However, fixtures for use by the physically handicapped shall have the hot water supply and drain, including the trap, insulated where exposed.

c. Sanitary drain lines.

d. Air chambers.

3.2.1.2 Pipes Passing Through Walls, Roofs, and Floors

a. Pipe insulation shall be continuous through the sleeve.

b. An aluminum jacket with factory applied moisture retarder shall be provided over the insulation wherever penetrations require sealing.

c. Where penetrating interior walls, the aluminum jacket shall extend 2 inches beyond either side of the wall and shall be secured on each end with a band.

d. Where penetrating floors, the aluminum jacket shall extend from a point below the backup material to a point 10 inches above the floor with one band at the floor and one not more than 1 inch from the end of the aluminum jacket.

e. Where penetrating waterproofed floors, the aluminum jacket shall extend from below the backup material to a point 2 inchesabove the flashing with a band 1 inch from the end of the aluminum jacket.

f. Where penetrating exterior walls, the aluminum jacket required for pipe exposed to weather shall continue through the sleeve to a point 2 inches beyond the interior surface of the wall.

g. For hot water pipes supplying lavatories or other similar heated

service which requires insulation, the insulation shall be terminated on the backside of the finished wall. The insulation termination shall be protected with two coats of vapor barrier coating with a minimum total thickness of 1/16 inch applied with glass tape embedded between coats (if applicable). The coating shall extend out onto the insulation 2 inches and shall seal the end of the insulation. Glass tape seams shall overlap 1 inch. Caulk the annular space between the pipe and wall penetration with approved fire stop material. Cover the pipe and wall penetration with a properly sized (well fitting) escutcheon plate. The escutcheon plate shall overlap the wall penetration at least 3/8 inch.

h. For domestic cold water pipes supplying lavatories or other similar cooling service which requires insulation, the insulation shall be terminated on the finished side of the wall (i.e., insulation must cover the pipe throughout the wall penetration). The insulation shall be protected with two coats of vapor barrier coating with a minimum total thickness of 1/16 inch. The coating shall extend out onto the insulation 2 inches and shall seal the end of the insulation. Caulk the annular space between the outer surface of the pipe insulation and the wall penetration with an approved fire stop material having vapor retarder properties. Cover the pipe and wall penetration with a properly sized (well fitting) escutcheon plate. The escutcheon plate shall overlap the wall penetration by at least 3/8 inch.

3.2.1.3 Pipes Passing Through Hangers

a. Insulation, whether hot or cold application, shall be continuous through hangers. All horizontal pipes 2 inches and smaller shall be supported on hangers with the addition of a Type 40 protection shield to protect the insulation in accordance with MSS SP-69. Whenever insulation shows signs of being compressed, or when the insulation or jacket shows visible signs of distortion at or near the support shield, insulation inserts as specified below for piping larger than 2 inches shall be installed.

b. Horizontal pipes larger than 2 inches at 60 degrees F and above shall be supported on hangers in accordance with MSS SP-69, and Section 15400 PLUMBING, GENERAL PURPOSE.

c. Horizontal pipes larger than 2 inches and below 60 degrees F shall be supported on hangers with the addition of a Type 40 protection shield in accordance with MSS SP-69. An insulation insert of cellular glass or calcium silicate shall be installed above each shield. The insert shall cover not less than the bottom 180 degree arc of the pipe. Inserts shall be the same thickness as the insulation, and shall extend 2 inches on each end beyond the protection shield. When insulation inserts are required per the above, and the insulation thickness is less than 1 inch, wooden or cork dowels or blocks may be installed between the pipe and the shield to prevent the weight of the pipe from crushing the insulation, as an option to installing insulation inserts. The insulation jacket shall be continuous over the wooden dowel, wooden block, or insulation insert.

d. Vertical pipes shall be supported with either Type 8 or Type 42 riser clamps with the addition of two Type 40 protection shields

in accordance with MSS SP-69 covering the 360 degree arc of the insulation. An insulation insert of cellular glass or calcium silicate shall be installed between each shield and the pipe. The insert shall cover the 360 degree arc of the pipe. Inserts shall be the same thickness as the insulation, and shall extend 2 inches on each end beyond the protection shield. When insulation inserts are required per the above, and the insulation thickness is less than 1 inch, wooden or cork dowels or blocks may be installed between the pipe and the shield to prevent the hanger from crushing the insulation, as an option instead of installing insulation inserts. The insulation jacket shall be continuous over the wooden dowel, wooden block, or insulation insert. The vertical weight of the pipe shall be supported with hangers located in a horizontal section of the pipe. When the pipe riser is longer than 30 feet, the weight of the pipe shall be additionally supported with hangers in the vertical run of the pipe which are directly clamped to the pipe, penetrating the pipe insulation. These hangers shall be insulated and the insulation jacket sealed as indicated herein for anchors in a similar service.

e. Inserts shall be covered with a jacket material of the same appearance and quality as the adjoining pipe insulation jacket, shall overlap the adjoining pipe jacket 1-1/2 inches, and shall be sealed as required for the pipe jacket. The jacket material used to cover inserts in flexible cellular insulation shall conform to ASTM C 1136, Type 1, and is allowed to be of a different material than the adjoining insulation material.

3.2.1.4 Flexible Cellular Pipe Insulation

Flexible cellular pipe insulation shall be tubular form for pipe sizes 6 inches and less. Seams shall be staggered when applying multiple layers of insulation. Sweat fittings shall be insulated with miter-cut pieces the same size as on adjacent piping. Screwed fittings shall be insulated with sleeved fitting covers fabricated from miter-cut pieces and shall be overlapped and sealed to the adjacent pipe insulation.

3.2.1.5 Pipes in high abuse areas.

In high abuse areas such as janitor closets and traffic areas in equipment rooms, and mechanical rooms, aluminum jackets shall be utilized. Pipe insulation to the 6 foot level shall be protected.

3.2.2 Aboveground Cold Pipelines

The following cold pipelines shall be insulated per Table I minus 30 degrees to plus 60 degrees F:

a. Domestic cold and chilled drinking water.

b. Make-up water.

c. Horizontal and vertical portions of interior roof drains.

d. Refrigerant suction lines.

e. Air conditioner condensate drains.

f. Exposed lavatory drains, exposed domestic water piping and drains

to areas for handicap personnel.

3.2.2.1 Insulation Thickness

Insulation thickness for cold pipelines shall be determined using Table I.

Table I - Cold Piping Insulation Thickness
Pipe Size (inches)

Type of Service	Material	Runouts up to 2 in*	1 in & less	1.25 - 2 in	2.5 - 4 in	5 - 6 in	8 in & larger
Refrigerant suction piping	CG		1.5	1.5	1.5	1.5	1.5
	FC		1.0	1.0	1.0	1.0	1.0
	PF		1.0	1.0	1.0	1.0	1.0
	PC		1.0	1.0	1.0	1.0	1.0
Cold domestic water, above and below ceilings & makeup water	CG	1.5	1.5	1.5	1.5	1.5	1.5
	FC	3/8	3/8	3/8	3/8	3/8	3/8
	PF	1.0	1.0	1.0	1.0	1.0	1.0
	PC	1.0	1.0	1.0	1.0	1.0	1.0
Exposed lavatory drains exposed domestic water piping & drains to areas for handicap personnel	FC	0.5	0.5	0.5	0.5	3/4	3/4
	MF	0.5	1.0	1.0	1.5	1.5	1.5
Horizontal & vertical roof drain leaders (including underside of roof drain fitting)	FC		0.5	0.5	0.5	0.5	0.5
	PF		1.0	1.0	1.0	1.0	1.0
	CG		1.5	1.5	1.5	1.5	1.5
	PC		1.0	1.0	1.0	1.0	1.0
Air conditioning condensate drain located inside building	FC		3/8	0.5	0.5	N/A	N/A
	PF		1.0	1.0	1.0	N/A	N/A
	PC		1.0	1.0	1.0	N/A	N/A

*When runouts to terminal units exceed 12 feet, the entire length of runout shall be insulated like main feed pipe.

LEGEND:

PF - Phenolic Foam
CG - Cellular Glass
MF - Mineral Fiber
FC - Flexible Cellular

PC - Polyisocyanurate Foam

3.2.2.2 Jacket for Mineral Fiber, Cellular Glass, Phenolic Foam, and Polyisocyanurate Foam Insulated Pipe

Insulation shall be covered with a factory applied vapor retarder jacket or field applied seal welded PVC jacket. Insulation inside the building shown to be protected with an aluminum jacket shall have the insulation and vapor retarder jacket installed as specified herein. The aluminum jacket shall be installed as specified for piping exposed to weather, except sealing of the laps of the aluminum jacket is not required. In high abuse areas such as janitor closets and traffic areas in equipment rooms, and mechanical rooms, aluminum jackets shall be utilized. Pipe insulation to the 6 ft level will be protected.

3.2.2.3 Insulation for Straight Runs (Mineral Fiber, Cellular Glass, Phenolic Foam and Polyisocyanurate Foam)

a. Insulation shall be applied to the pipe with joints tightly butted. All butted joints and ends shall be sealed with a vapor retarder coating.

b. Longitudinal laps of the jacket material shall overlap not less than 1-1/2 inches. Butt strips 3 inches wide shall be provided for circumferential joints.

c. Laps and butt strips shall be secured with adhesive and stapled on 4 inch centers if not factory self-sealing. If staples are used, they shall be sealed per paragraph 3.2.2.3 e.

d. Factory self-sealing lap systems may be used when the ambient temperature is between 40 degrees and 120 degrees F during installation. The lap system shall be installed in accordance with manufacturer's recommendations. Stapler shall be used only if specifically recommended by the manufacturer. Where gaps occur, the section shall be replaced or the gap repaired by applying adhesive under the lap and then stapling.

e. All Staples, including those used to repair factory self-seal lap systems, shall be coated with a vapor retarder coating. All seams, except those on factory self-seal systems shall be coated with vapor retarder coating.

f. Breaks and punctures in the jacket material shall be patched by wrapping a strip of jacket material around the pipe and securing it with adhesive, stapling, and coating with vapor retarder coating. The patch shall extend not less than 1-1/2 inches past the break.

g. At penetrations such as thermometers, the voids in the insulation shall be filled and sealed with vapor retarder coating.

3.2.2.4 Insulation for Fittings and Accessories

a. Pipe insulation shall be tightly butted to the insulation of the fittings and accessories. The butted joints and ends shall be coated with vapor retarder coating.

b. Precut or preformed insulation shall be placed around all fittings

and accessories and shall conform to MICA plates except as modified herein: 5 for anchors; 10, 11, and 13 for fittings; 14 for valves; and 17 for flanges and unions. Insulation shall be the same insulation as the pipe insulation, including same density, thickness, and thermal conductivity. Where precut/preformed is unavailable, rigid preformed pipe insulation sections may be segmented into the shape required. Insulation of the same thickness and conductivity as the adjoining pipe insulation shall be used. If nesting size insulation is used, the insulation shall be overlapped 2 inches or one pipe diameter. Elbows insulated using segments shall conform to MICA Tables 12.20 "Mitered Insulation Elbow'.

c. Upon completion of insulation installation on flanges, unions, valves, anchors, fittings and accessories, terminations, seams, joints and insulation not protected by factory vapor retarder jackets or PVC fitting covers shall be protected with two coats of vapor retarder coating with a minimum total thickness of 1/16 inch, applied with glass tape embedded between coats. Tape seams shall overlap 1 inch.The coating shall extend out onto the adjoining pipe insulation 2 inches. Fabricated insulation with a factory vapor retarder jacket shall be protected with two coats of vapor retarder coating with a minimum thickness of 1/16 inch and with a 2 inch wide glass tape embedded between coats. Where fitting insulation butts to pipe insulation, the joints shall be sealed with a vapor retarder coating and a 4 inch wide ASJ tape which matches the jacket of the pipe insulation.

d. Anchors attached directly to the pipe shall be insulated for a sufficient distance to prevent condensation but not less than 6 inches from the insulation surface.

e. Insulation shall be marked showing the location of unions, strainers, and check valves.

3.2.2.5 Optional PVC Fitting Covers

At the option of the Contractor, premolded, one or two piece PVC fitting covers may be used in lieu of the vapor retarder and embedded glass tape. Factory precut or premolded insulation segments shall be used under the fitting covers for elbows. Insulation segments shall be the same insulation as the pipe insulation including same density, thickness, and thermal conductivity. The covers shall be secured by PVC vapor retarder tape, adhesive, seal-welding or with tacks made for securing PVC covers. Seams in the cover, and tacks and laps to adjoining pipe insulation jacket, shall be sealed with vapor retarder tape to ensure that the assembly has a continuous vapor seal.

3.2.3 Aboveground Hot Pipelines

The following hot pipelines above 60 degrees F shall be insulated per Table II:

a. Domestic hot water supply & recirculating system.

3.2.3.1 Insulation Thickness

Insulation thickness for hot pipelines shall be determined using Table II.

LEGEND:

PF - Phenolic Foam
CG - Cellular Glass
CS - Calcium Silicate
MF - Mineral Fiber
FC - Flexible Cellular
PL - Perlite
PC - Polyisocyanurate Foam

Table II - Hot Piping Insulation Thickness
Pipe Size (inches)

Type of Service (degrees F)	Material	Runouts up to 2 in *	1 in & less	1.25 - 2 in	2.5 - 4 in	5 - 6 in	8 in & larger
Hot domestic water supply & recirculating system, (200 F max)**	CG	1.5	1.5	1.5	1.5	1.5	1.5
	FC	0.5	0.5	1.0	1.0	1.5	1.5
	PF	0.5	0.5	1.0	1.0	1.0	1.0
	MF	0.5	1.5	1.5	1.5	1.5	1.5
	PC	1.0	1.0	1.0	1.0	1.0	1.0
	CG		1.5	2.0	2.0	2.0	3.5
	PF		1.0	1.0	1.0	1.0	1.5

* When runouts to terminal units exceed 12 feet, the entire length of runout shall be insulated like the main feed pipe.

** Applies to recirculating sections of service or domestic hot water systems and first 8 feet from storage tank for non-recirculating systems.

3.2.3.2 Jacket for Insulated Hot Pipe, Except Pipe Insulated with Flexible Cellular

Insulation shall be covered, in accordance with manufacturer's recommendations, with a factory applied Type II jacket or field applied aluminum where required or seal welded PVC.

3.2.3.3 Insulation for Straight Runs

a. Insulation shall be applied to the pipe with joints tightly butted.

b. Longitudinal laps of the jacket material shall overlap not less than 1-1/2 inches, and butt strips 3 inches wide shall be provided for circumferential joints.

c. Laps and butt strips shall be secured with adhesive and stapled on 4 inch centers if not factory self-sealing. Adhesive may be omitted where pipe is concealed.

d. Factory self-sealing lap systems may be used when the ambient temperature is between 40 degrees and 120 degrees F and shall be installed in accordance with manufacturer's instructions. Laps and butt strips shall be stapled whenever there is nonadhesion of the system. Where gaps occur, the section shall be replaced or

the gap repaired by applying adhesive under the lap and then stapling.

e. Breaks and punctures in the jacket material shall be patched by either wrapping a strip of jacket material around the pipe and securing with adhesive and staple on 4 inch centers (if not factory self-sealing), or patching with tape and sealing with a brush coat of vapor retarder coating. Adhesive may be omitted where pipe is concealed. Patch shall extend not less than 1-1/2 inches past the break.

f. Flexible cellular pipe insulation shall be installed by slitting tubular sections and applying onto piping or tubing. Alternately, whenever possible, slide unslit sections over the open ends of piping or tubing. All seams and butt joints shall be secured and sealed with adhesive. When using self seal products only the butt joints shall be secured with adhesive. Insulation shall be pushed on the pipe, never pulled. Stretching of insulation may result in open seams and joints. All edges shall be clean cut. Rough or jagged edges of the insulation shall not be permitted. Proper tools such as sharp knives shall be used. Type II sheet insulation when used on pipe larger than 6 inches shall not be stretched around the pipe. On pipes larger than 12 inches, adhere sheet insulation directly to the pipe on the lower 1/3 of the pipe.

3.2.3.4 Insulation for Fittings and Accessories

a. Pipe insulation shall be tightly butted to the insulation of the fittings and accessories.

b. Precut or preformed insulation shall be placed around all fittings and accessories and shall conform to MICA plates, except as modified herein: 5 for anchors; 10, 11, 12,and 13 for fittings; 14, 15 and 16 for valves; 17 for flanges and unions; and 18 for couplings. Insulation shall be the same as the pipe insulation, including same density, thickness, and thermal conductivity. Where precut/preformed is unavailable, rigid preformed pipe insulation sections may be segmented into the shape required. Insulation of the same thickness and conductivity as the adjoining pipe insulation shall be used. If nesting size insulation is used, the insulation shall be overlapped 2 inches or one pipe diameter. Elbows insulated using segments shall conform to MICA Tables 12.20 "Mitered Insulation Elbow".

c. Upon completion of installation of insulation on flanges, unions, valves, anchors, fittings and accessories, terminations and insulation not protected by factory vapor retarder jackets or PVC fitting covers shall be protected with two coats of adhesive applied with glass tape embedded between coats. Tape seams shall overlap 1 inch. Adhesive shall extend onto the adjoining insulation not less than 2 inches. The total dry film thickness shall be not less than 1/16 inch.

d. Insulation terminations shall be tapered to unions at a 45-degree angle.

e. At the option of the Contractor, factory premolded one- or two-piece PVC fitting covers may be used in lieu of the adhesive and embedded glass tape. Factory premolded segments or factory or

field cut blanket insert insulation segments shall be used under the cover and shall be the same thickness as adjoining pipe insulation. The covers shall be secured by PVC vapor retarder tape, adhesive, seal-welding or with tacks made for securing PVC covers.

3.2.4 Piping Exposed to Weather

Piping exposed to weather shall be insulated and jacketed as specified for the applicable service inside the building. After this procedure, an aluminum jacket shall be applied. Corrugated aluminum jacket shall not be installed on piping exposed to the weather. Flexible cellular insulation exposed to weather shall be treated in accordance with paragraph INSTALLATION OF FLEXIBLE CELLULAR INSULATION.

3.2.4.1 Aluminum Jacket

The jacket for hot piping may be factory applied. The jacket shall overlap not less than 2 inches at longitudinal and circumferential joints and shall be secured with bands at not more than 12 inch centers. Longitudinal joints shall be overlapped down to shed water and located at 4 or 8 o'clock positions. Joints on piping 60 degrees F and below shall be sealed with caulking while overlapping to prevent moisture penetration. Where jacketing on piping 60 degrees F and below abuts an uninsulated surface, joints shall be caulked to prevent moisture penetration. Joints on piping above 60 degrees F shall be sealed with a moisture retarder.

3.2.4.2 Insulation for Fittings

Flanges, unions, valves, fittings, and accessories shall be insulated and finished as specified for the applicable service. Two coats of breather emulsion type weatherproof mastic (impermeable to water, permeable to air) recommended by the insulation manufacturer shall be applied with glass tape embedded between coats. Tape overlaps shall be not less than 1 inch and the adjoining aluminum jacket not less than 2 inches. Factory preformed aluminum jackets may be used in lieu of the above. Molded PVC fitting covers shall be provided when PVC jackets are used for straight runs of pipe. PVC fitting covers shall have adhesive welded joints and shall be weatherproof.

3.3 DUCT INSULATION INSTALLATION

Except for oven hood exhaust duct insulation, corner angles shall be installed on external corners of insulation on ductwork in exposed finished spaces before covering with jacket. Air conditioned spaces shall be defined as those spaces directly supplied with cooled conditioned air (or provided with a cooling device such as a fan-coil unit) and heated conditioned air (or provided with a heating device such as a unit heater, radiator or convector).

3.3.1 Duct Insulation Thickness

Duct insulation thickness shall be in accordance with Table III. Maximum thickness for flexible cellular insulation shall not exceed 25 mm, and maximum thickness for polyisocyanurate foam insulation shall not exceed 40 mm to comply with ASTM E 84 flame spread/smoke developed ratings of 25/50

Table III - Minimum Duct Insulation (inches)

Cold Air Ducts	2.0
Relief Ducts	1.5
Fresh Air Intake Ducts	1.5
Warm Air Ducts	2.0
Relief Ducts	1.5
Fresh Air Intake Ducts	1.5

Maximum thickness for flexible cellular insulation shall not exceed 1 inch and maximum thickness for polyisocyanurate foam insulation shall not exceed 1.5 inch, to comply with ASTM E 84 flame spread/smoke developed ratings of 25/50.

3.3.2 Insulation and Vapor Retarder for Cold Air Duct

Insulation and vapor retarder shall be provided for the following cold air ducts and associated equipment. Vapor retarder coating shall be accomplished by applying two coats of vapor retarder coating with a layer of glass cloth embedded between the coats.

a. Supply ducts.

b. Relief ducts.

c. Flexible runouts (field-insulated).

d. Plenums.

e. Fresh air intake ducts.

f. Ducts exposed to weather.

g. Combustion air intake ducts.

Insulation for rectangular ducts shall be flexible type where concealed, minimum density 3/4 pcf and rigid type where exposed, minimum density 3 pcf. Insulation for round/oval ducts shall be flexible type, minimum density 3/4 pcf with a factory Type I or II jacket; or, a semi rigid board, minimum density 3 pcf, formed or fabricated to a tight fit, edges beveled and joints tightly butted and staggered, with a factory applied Type I or II all service jacket. Insulation for exposed ducts shall be provided with either a white, paintable, factory-applied Type I jacket or a vapor retarder jacket coating finish as specified. Insulation on concealed duct shall be provided with a factory-applied Type I or II vapor retarder jacket. The total dry film thickness shall be approximately 1/16 inch. Duct insulation shall be continuous through sleeves and prepared openings except fire wall penetrations. Duct insulation terminating at fire dampers, shall be continuous over the damper collar and retaining angle of fire dampers, which are exposed to unconditioned air and which may be prone to condensate formation. Duct insulation and vapor retarder shall cover the collar, neck, and any uninsulated surfaces of diffusers, registers and grills. Vapor retarder materials shall be applied to form a complete unbroken vapor seal over the insulation. Sheet Metal Duct shall be sealed in accordance with CEGS 15895 AIR SUPPLY, DISTRIBUTION, VENTILATION, AND EXHAUST SYSTEM.

3.3.2.1 Installation on Concealed Duct

a. For rectangular, oval or round ducts, insulation shall be attached by applying adhesive around the entire perimeter of the duct in 6 inch wide strips on 12 inch centers.

b. For rectangular and oval ducts, 24 inches and larger insulation shall be additionally secured to bottom of ducts by the use of mechanical fasteners. Fasteners shall be spaced on 16 inch centers and not more than 16 inches from duct corners.

c. For rectangular, oval and round ducts, mechanical fasteners shall be provided on sides of duct risers for all duct sizes. Fasteners shall be spaced on 16 inch centers and not more than 16 inches from duct corners.

d. Insulation shall be impaled on the mechanical fasteners (self stick pins) where used and shall be pressed thoroughly into the adhesive. Care shall be taken to ensure vapor retarder jacket joints overlap 2 inches. The insulation shall not be compressed to a thickness less than that specified. Insulation shall be carried over standing seams and trapeze-type duct hangers.

e. Self-locking washers shall be installed where mechanical fasteners are used. The pin shall be trimmed back and bent over.

f. Jacket overlaps shall be secured with staples and tape as necessary to ensure a secure seal. Staples, tape and seams shall be coated with a brush coat of vapor retarder coating.

g. Breaks in the jacket material shall be covered with patches of the same material as the vapor retarder jacket. The patches shall extend not less than 2 inches beyond the break or penetration in all directions and shall be secured with tape and staples. Staples and tape joints shall be sealed with a brush coat of vapor retarder coating.

h. At jacket penetrations such as hangers, thermometers, and damper operating rods, voids in the insulation shall be filled and the penetration sealed with a brush coat of vapor retarder coating.

i. Insulation terminations and pin punctures shall be sealed and flashed with a reinforced vapor retarder coating finish or tape with a brush coat of vapor retarder coating. The coating shall overlap the adjoining insulation and uninsulated surface 2 inches. Pin puncture coatings shall extend 2 inches from the puncture in all directions.

j. Where insulation standoff brackets occur, insulation shall be extended under the bracket and the jacket terminated at the bracket.

3.3.2.2 Installation on Exposed Duct Work

a. For rectangular ducts, rigid insulation shall be secured to the duct by mechanical fasteners on all four sides of the duct, spaced not more than 12 inches apart and not more than 3 inches from the edges of the insulation joints. A minimum of two rows of

fasteners shall be provided for each side of duct 12 inches and larger. One row shall be provided for each side of duct less than 12 inches.

b. Duct insulation shall be formed with minimum jacket seams. Each piece of rigid insulation shall be fastened to the duct using mechanical fasteners. When the height of projections is less than the insulation thickness, insulation shall be brought up to standing seams, reinforcing, and other vertical projections and shall not be carried over. Vapor retarder jacket shall be continuous across seams, reinforcing, and projections. When height of projections is greater than the insulation thickness, insulation and jacket shall be carried over.

c. Insulation shall be impaled on the fasteners; self-locking washers shall be installed and the pin trimmed or bent over.

d. Joints in the insulation jacket shall be sealed with a 4 inchwide strip of tape. Tape seams shall be sealed with a brush coat of vapor retarder coating.

e. Breaks and ribs or standing seam penetrations in the jacket material shall be covered with a patch of the same material as the jacket. Patches shall extend not less than 2 inches beyond the break or penetration and shall be secured with tape and stapled. Staples and joints shall be sealed with a brush coat of vapor retarder coating.

f. At jacket penetrations such as hangers, thermometers, and damper operating rods, the voids in the insulation shall be filled and the penetrations sealed with a brush coat of vapor retarder coating.

g. Insulation terminations and pin punctures shall be sealed and flashed with a reinforced vapor retarder coating finish. The coating shall overlap the adjoining insulation and uninsulated surface 2 inches. Pin puncture coatings shall extend 2 inches from the puncture in all directions.

h. Oval and round ducts, flexible type, shall be insulated with factory Type I jacket insulation with minimum density of 3/4 pcf, attached as per MICA standards.

3.3.3 Ducts Handling Air for Dual Purpose

For air handling ducts for dual purpose below and above 60 degrees F, ducts shall be insulated as specified for cold air duct.

3.3.4 Duct Test Holes

After duct systems have been tested, adjusted, and balanced, breaks in the insulation and jacket shall be repaired in accordance with the applicable section of this specification for the type of duct insulation to be repaired.

3.3.5 Duct Exposed to Weather

3.3.5.1 Installation

Ducts exposed to weather shall be insulated and finished as specified for the applicable service for exposed duct inside the building. After the above is accomplished, the insulation shall then be further finished as detailed in the following subparagraphs.

3.3.5.2 Round Duct

Aluminum jacket with factory applied moisture retarder shall be applied with the joints lapped not less than 3 inches and secured with bands located at circumferential laps and at not more than 12 inch intervals throughout. Horizontal joints shall lap down to shed water and located at 4 or 8 o'clock position. Joints shall be sealed with caulking to prevent moisture penetration. Where jacketing abuts an uninsulated surface, joints shall be sealed with caulking.

3.3.5.3 Fittings

Fittings and other irregular shapes shall be finished as specified for rectangular ducts.

3.3.5.4 Rectangular Ducts

Two coats of weather barrier mastic reinforced with fabric or mesh for outdoor application shall be applied to the entire surface. Each coat of weatherproof mastic shall be 1/16 inch minimum thickness. The exterior shall be a metal jacketing applied for mechanical abuse and weather protection, and secured with screws.

3.4 EQUIPMENT INSULATION INSTALLATION

3.4.1 General

Removable insulation sections shall be provided to cover parts of equipment which must be opened periodically for maintenance including vessel covers, fasteners, flanges and accessories. Equipment insulation shall be omitted on the following:

a. Handholes.

b. Cleanouts.

c. ASME stamps.

d. Manufacturer's nameplates.

3.4.2 Insulation for Cold Equipment

Cold equipment below 60 degrees F: Insulation shall be furnished on equipment handling media below 60 degrees F including the following:

a. Drip pans under chilled equipment.

b. Air handling equipment parts that are not factory insulated.

3.4.2.1 Insulation Type

Insulation shall be suitable for the temperature encountered. Thicknesses shall be as follows:

a. Equipment handling media between 35 and 60 degrees F: 1.5 inch thick cellular glass, 1 inch thick flexible cellular, 1 inch thick phenolic foam, or 1 inch thick polyisocyanurate foam.

3.4.2.2 Other Equipment

a. Insulation shall be formed or fabricated to fit the equipment. To ensure a tight fit on round equipment, edges shall be beveled and joints shall be tightly butted and staggered.

b. Insulation shall be secured in place with bands or wires at intervals as recommended by the manufacturer but not more than 12 inch centers except flexible cellular which shall be adhered. Insulation corners shall be protected under wires and bands with suitable corner angles.

c. Cellular glass and phenolic foam insulation shall be set in a coating of bedding compound, and joints shall be sealed with bedding compound as recommended by the manufacturer.

d. Exposed insulation corners shall be protected with corner angles.

e. Insulation on equipment with ribs shall be applied over 6 x 6 inches by 12 gauge welded wire fabric which has been cinched in place, or if approved by the Contracting Officer, spot welded to the equipment over the ribs. Insulation shall be secured to the fabric with J-hooks and 2 x 2 incheswashers or shall be securely banded or wired in place on 12 inch centers.

3.4.2.3 Vapor Retarder

Upon completion of installation of insulation, penetrations shall be caulked. Two coats of vapor retarder coating shall be applied over insulation, including removable sections, with a layer of open mesh synthetic fabric embedded between the coats. The total dry thickness of the finish shall be 1/16 inch. Caulking shall be applied to parting line between equipment and removable section insulation.

3.4.3 Insulation for Hot Equipment

Insulation shall be furnished on equipment handling media above 60 degrees F including the following:

a. Water heaters.

3.4.3.1 Insulation

Insulation shall be suitable for the temperature encountered.

Insulation thickness for hot equipment shall be determined using Table IV:

Legend

RMF: Rigid Mineral Fiber
FMF: Flexible Mineral Fiber
CS: Calcium Silicate
PL: Perlite
CG: Cellular Glass
FC: Flexible Cellular

PF: Phenolic Foam
PC: Polyisocyanurate Foam

TABLE IV
Insulation Thickness for Hot Equipment (Inches)

Equipment handling media to indicated temperature limit:	Material	Thickness
250F	RMF	2.0 inches
	FMF	2.0 inches
	CS/PL	4.0 inches
	CG	3.0 inches
	PF	1.5 inches
	FC (<200F)	1.0 inches
	PC	1.0 inches

3.4.3.2 Other Equipment

a. Insulation shall be formed or fabricated to fit the equipment. To ensure a tight fit on round equipment, edges shall be beveled and joints shall be tightly butted and staggered.

b. Insulation shall be secured in place with bands or wires at intervals as recommended by the manufacturer but not greater than 12 inch centers except flexible cellular which shall be adhered. Insulation corners shall be protected under wires and bands with suitable corner angles.

c. On high vibration equipment, cellular glass insulation shall be set in a coating of bedding compound as recommended by the manufacturer, and joints shall be sealed with bedding compound. Mineral fiber joints shall be filled with finishing cement.

d. Exposed insulation corners shall be protected with corner angles.

e. On equipment with ribs, such as boiler flue gas connection, draft fans, and fly ash or soot collectors, insulation shall be applied over 6 x 6 inch by 12 gauge welded wire fabric which has been cinched in place, or if approved by the Contracting Officer, spot welded to the equipment over the ribs. Insulation shall be secured to the fabric with J-hooks and 2 x 2 inch washers or shall be securely banded or wired in place on 12 inch (maximum) centers.

f. Upon completion of installation of insulation, penetrations shall be caulked. Two coats of adhesive shall be applied over insulation, including removable sections, with a layer of glass cloth embedded between the coats. The total dry thickness of the finish shall be 1/16 inch. Caulking shall be applied to parting line between equipment and removable section insulation.

3.4.4 Equipment Exposed to Weather

3.4.4.1 Installation

Equipment exposed to weather shall be insulated and finished in accordance with the requirements for ducts exposed to weather in paragraph DUCT INSULATION INSTALLATION.

3.4.4.2 Optional Panels

At the option of the Contractor, prefabricated metal insulation panels may be used in lieu of the insulation and finish previously specified. Thermal performance shall be equal to or better than that specified for field applied insulation. Panels shall be the standard catalog product of a manufacturer of metal insulation panels. Fastenings, flashing, and support system shall conform to published recommendations of the manufacturer for weatherproof installation and shall prevent moisture from entering the insulation. Panels shall be designed to accommodate thermal expansion and to support a 250 pound walking load without permanent deformation or permanent damage to the insulation. Exterior metal cover sheet shall be aluminum and exposed fastenings shall be stainless steel or aluminum.

-- End of Section --

SECTION 15182

REFRIGERANT PIPING
01/01

PART 1 GENERAL

1.1 REFERENCES

The publications listed below form a part of this specification to the extent referenced. The publications are referred to in the text by basic designation only.

AIR CONDITIONING AND REFRIGERATION INSTITUTE (ARI)

ARI 710	(1995) Liquid-Line Driers
ARI 720	(1997) Refrigerant Access Valves and Hose Connectors
ARI 750	(1994) Thermostatic Refrigerant Expansion Valves
ARI 760	(1994) Solenoid Valves for Use with Volatile Refrigerants

AMERICAN SOCIETY FOR TESTING AND MATERIALS (ASTM)

ASTM A 53/A 53M	(1999b) Pipe, Steel, Black and Hot-Dipped, Zinc-Coated, Welded and Seamless
ASTM A 653/A 653M	(1999a) Steel Sheet, Zinc-Coated (Galvanized) or Zinc-Iron Alloy-Coated (Galvannealed) by the Hot-Dip Process
ASTM B 32	(1996) Solder Metal
ASTM B 62	(1993) Composition Bronze or Ounce Metal Castings
ASTM B 75	(1999) Seamless Copper Tube
ASTM B 117	(1997) Operating Salt Spray (Fog) Apparatus
ASTM B 280	(1999) Seamless Copper Tube for Air Conditioning and Refrigeration Field Service
ASTM B 813	(1993) Liquid and Paste Fluxes for Soldering Applications of Copper and Copper Alloy Tube
ASTM D 520	(1984; R 1995el) Zinc Dust Pigment
ASTM D 3308	(1997) PTFE Resin Skived Tape

AMERICAN SOCIETY OF HEATING, REFRIGERATING AND AIR-CONDITIONING

ENGINEERS (ASHRAE)

ASHRAE 15	(1994) Safety Code for Mechanical Refrigeration
ASHRAE 17	(1998) Method of Testing for Capacity Rating of Thermostatic Refrigerant Expansion Valves

ASME INTERNATIONAL (ASME)

ASME B16.22	(1995; B16.22a1998) Wrought Copper and Copper Alloy Solder Joint Pressure Fittings
ASME B16.26	(1988) Cast Copper Alloy Fittings for Flared Copper Tubes
ASME B31.1	(1998) Power Piping
ASME B31.5	(1992; B31.5a1994) Refrigeration Piping
ASME B40.1	(1991) Gauges - Pressure Indicating Dial Type - Elastic Element

AMERICAN WELDING SOCIETY (AWS)

AWS A5.8	(1992) Filler Metals for Brazing and Braze Welding
AWS Brazing Hdbk	(1991) Brazing Handbook
AWS Z49.1	(1999) Safety in Welding and Cutting

MANUFACTURERS STANDARDIZATION SOCIETY OF THE VALVE AND FITTINGS INDUSTRY (MSS)

MSS SP-58	(1993) Pipe Hangers and Supports - Materials, Design and Manufacture
MSS SP-69	(1996) Pipe Hangers and Supports - Selection and Application

1.2 SUBMITTALS

Government approval is required for submittals with a "G" designation; submittals not having a "G" designation are for information only. When used, a designation following the "G" designation identifies the office that will review the submittal for the Government. The following shall be submitted in accordance with Section 01330 SUBMITTAL PROCEDURES:

SD-02 Shop Drawings

Refrigerant Piping System; G

Drawings provided in adequate detail to demonstrate compliance with contract requirements. Drawings shall consist of:

a. Piping layouts which identify all valves and fittings.

b. Plans and elevations which identify clearances required for maintenance and operation.

SD-03 Product Data

Refrigerant Piping System; G

Manufacturer's standard catalog data, at least 5 weeks prior to the purchase or installation of a particular component, highlighted to show material, size, options, performance charts and curves, etc. in adequate detail to demonstrate compliance with contract requirements. Data shall include manufacturer's recommended installation instructions and procedures. Data shall be provided for the following components as a minimum:

a. Piping and Fittings

b. Valves

c. Piping Accessories

d Pipe Hangers, Inserts, and Supports

Spare Parts; G A/E

Spare parts data for each different item of equipment specified. The data shall include a complete list of parts and supplies, with current unit prices and source of supply, a recommended spare parts list for 1 year of operation, and a list of the parts recommended by the manufacturer to be replaced on a routine basis.

Refrigerant Piping Tests; G

A schedule, at least 2 weeks prior to the start of related testing, for each test. The schedules shall identify the proposed date, time, and location for each test.

SD-06 Test Reports

Refrigerant Piping Tests; G

Six copies of the report shall be provided in bound 8 1/2 x 11 inch booklets. Reports shall document all phases of the tests performed. The report shall include initial test summaries, all repairs/adjustments made, and the final test results.

SD-10 Operation and Maintenance Data; G

Operation and maintenance data shall be provided for all equipment, components and items of work specified herein where standard data is routinely and commercially available by the manufacturer. Submit in accordance with Section 01781 OPERATION AND MAINTENANCE DATA.

1.3 SAFETY REQUIREMENTS

Exposed moving parts, parts that produce high operating temperature, parts which may be electrically energized, and parts that may be a hazard to operating personnel shall be insulated, fully enclosed, guarded, or fitted

with other types of safety devices. Safety devices shall be installed so that proper operation of equipment is not impaired. Welding and cutting safety requirements shall be in accordance with AWS Z49.1.

1.4 DELIVERY, STORAGE, AND HANDLING

Stored items shall be protected from the weather, humidity and temperature variations, dirt and dust, or other contaminants. Proper protection and care of all material both before and during installation shall be the Contractor's responsibility. Any materials found to be damaged shall be replaced at the Contractor's expense. During installation, piping and similar openings shall be capped to keep out dirt and other foreign matter.

1.5 PROJECT/SITE CONDITIONS

1.5.1 Verification of Dimensions

The Contractor shall become familiar with all details of the work, verify all dimensions in the field, and advise the Contracting Officer of any discrepancy before performing any work.

1.5.2 Drawings

Because of the small scale of the drawings, it is not possible to indicate all offsets, fittings, and accessories that may be required. The Contractor shall carefully investigate the plumbing, fire protection, electrical, structural and finish conditions that would affect the work to be performed and shall arrange such work accordingly, furnishing required offsets, fittings, and accessories to meet such conditions.

PART 2 PRODUCTS

2.1 STANDARD COMMERCIAL PRODUCTS

Materials and equipment shall be standard products of a manufacturer regularly engaged in the manufacturing of such products, which are of a similar material, design and workmanship. The standard products shall have been in satisfactory commercial or industrial use for 2 years prior to bid opening. The 2 year use shall include applications of equipment and materials under similar circumstances and of similar size. The 2 years experience shall be satisfactorily completed by a product which has been sold or is offered for sale on the commercial market through advertisements, manufacturer's catalogs, or brochures. Products having less than a 2 year field service record shall be acceptable if a certified record of satisfactory field operation, for not less than 6000 hours exclusive of the manufacturer's factory tests, can be shown. Products shall be supported by a service organization. System components shall be environmentally suitable for the indicated locations.

2.2 ELECTRICAL WORK

Electrical equipment and wiring shall be in accordance with Section 16415 ELECTRICAL WORK, INTERIOR. Field wiring shall be in accordance with manufacturer's instructions. Manual or automatic control and protective or signal devices required for the operation specified and any control wiring required for controls and devices specified, but not shown, shall be provided.

2.3 REFRIGERANT PIPING SYSTEM

Refrigerant piping, valves, fittings, and accessories shall be in accordance with ASHRAE 15 and ASME B31.5, except as specified herein. Refrigerant piping, valves, fittings, and accessories shall be compatible with the fluids used and capable of withstanding the pressures and temperatures of the service. Refrigerant piping, valves, and accessories used for refrigerant service shall be cleaned, dehydrated, and sealed (capped or plugged) prior to shipment from the manufacturer's plant.

2.4 PIPE, FITTINGS AND END CONNECTIONS (JOINTS)

2.4.1 Copper Tubing

Copper tubing shall conform to ASTM B 280 annealed or hard drawn as required. Copper tubing shall be soft annealed where bending is required and hard drawn where no bending is required. Soft annealed copper tubing shall not be used in sizes larger than 1-3/8 inches. Joints shall be brazed except that joints on lines 7/8 inchand smaller may be flared. Cast copper alloy fittings for flared copper tube shall conform to ASME B16.26 and ASTM B 62. Wrought copper and bronze solder-joint pressure fittings shall conform to ASME B16.22 and ASTM B 75. Joints and fittings for brazed joint shall be wrought-copper or forged-brass sweat fittings. Cast sweat-type joints and fittings shall not be allowed for brazed joints. Brass or bronze adapters for brazed tubing may be used for connecting tubing to flanges and to threaded ends of valves and equipment.

2.4.2 Solder

Solder shall conform to ASTM B 32, grade Sb5, tin-antimony alloy for service pressures up to 150 psig. Solder flux shall be liquid or paste form, non-corrosive and conform to ASTM B 813.

2.4.3 Brazing Filler Metal

Filler metal shall conform to AWS A5.8, Type BAg-5 with AWS Type 3 flux, except Type BCuP-5 or BCuP-6 may be used for brazing copper-to-copper joints.

2.5 VALVES

Valves shall be designed, manufactured, and tested specifically for refrigerant service. Valve bodies shall be of brass, bronze, steel, or ductile iron construction. Valves 1 inch and smaller shall have brazed or socket welded connections. Valves larger than 1 inch shall have butt welded end connections. Threaded end connections shall not be used, except in pilot pressure or gauge lines where maintenance disassembly is required and welded flanges cannot be used. Internal parts shall be removable for inspection or replacement without applying heat or breaking pipe connections. Valve stems exposed to the atmosphere shall be stainless steel or corrosion resistant metal plated carbon steel. Direction of flow shall be legibly and permanently indicated on the valve body. Control valve inlets shall be fitted with integral or adapted strainer or filter where recommended or required by the manufacturer. Purge, charge and receiver valves shall be of manufacturer's standard configuration.

2.5.1 Refrigerant Stop Valves

Valve shall be the globe or full-port ball type with a back-seating stem especially packed for refrigerant service. Valve packing shall be

replaceable under line pressure. Valve shall be provided with a wrench operator and a seal cap. Valve shall be the straight or angle pattern design as indicated.

2.5.2 Check Valves

Valve shall be the swing or lift type as required to provide positive shutoff at the differential pressure indicated. Valve shall be provide with resilient seat.

2.5.3 Liquid Solenoid Valves

Valves shall comply with ARI 760 and be suitable for continuous duty with applied voltages 15 percent under and 5 percent over nominal rated voltage at maximum and minimum encountered pressure and temperature service conditions. Valves shall be direct-acting or pilot-operating type, packless, except that packed stem, seal capped, manual lifting provisions shall be furnished. Solenoid coils shall be moisture-proof, UL approved, totally encapsulated or encapsulated and metal jacketed as required. Valves shall have safe working pressure of 400 psi and a maximum operating pressure differential of at least 200 psi at 85 percent rated voltage. Valves shall have an operating pressure differential suitable for the refrigerant used.

2.5.4 Expansion Valves

Valve shall conform to ARI 750 and ASHRAE 17. Valve shall be the diaphragm and spring-loaded type with internal or external equalizers, and bulb and capillary tubing. Valve shall be provided with an external superheat adjustment along with a seal cap. Internal equalizers may be utilized where flowing refrigerant pressure drop between outlet of the valve and inlet to the evaporator coil is negligible and pressure drop across the evaporator is less than the pressure difference corresponding to 2 degrees F of saturated suction temperature at evaporator conditions. Bulb charge shall be determined by the manufacturer for the application and such that liquid will remain in the bulb at all operating conditions. Gas limited liquid charged valves and other valve devices for limiting evaporator pressure shall not be used without a distributor or discharge tube or effective means to prevent loss of control when bulb becomes warmer than valve body. Pilot-operated valves shall have a characterized plug to provide required modulating control. A de-energized solenoid valve may be used in the pilot line to close the main valve in lieu of a solenoid valve in the main liquid line. An isolatable pressure gauge shall be provided in the pilot line, at the main valve. Automatic pressure reducing or constant pressure regulating expansion valves may be used only where indicted or for constant evaporator loads.

2.5.5 Safety Relief Valves

Valve shall be the two-way type, unless indicated otherwise. Valve shall bear the ASME code symbol. Valve capacity shall be certified by the National Board of Boiler and Pressure Vessel Inspectors. Valve shall be of an automatically reseating design after activation.

2.5.6 Evaporator Pressure Regulators, Direct-Acting

Valve shall include a diaphragm/spring assembly, external pressure adjustment with seal cap, and pressure gauge port. Valve shall maintain a constant inlet pressure by balancing inlet pressure on diaphragm against an

adjustable spring load. Pressure drop at system design load shall not exceed the pressure difference corresponding to a 2 degrees F change in saturated refrigerant temperature at evaporator operating suction temperature. Spring shall be selected for indicated maximum allowable suction pressure range.

2.5.7 Refrigerant Access Valves

Refrigerant access valves and hose connections shall be in accordance with ARI 720.

2.6 PIPING ACCESSORIES

2.6.1 Filter Driers

Driers shall conform to ARI 710. Sizes 5/8 inch and larger shall be the full flow, replaceable core type. Sizes 1/2 inch and smaller shall be the sealed type. Cores shall be of suitable desiccant that will not plug, cake, dust, channel, or break down, and shall remove water, acid, and foreign material from the refrigerant. Filter driers shall be constructed so that none of the desiccant will pass into the refrigerant lines. Minimum bursting pressure shall be 1,500 psi.

2.6.2 Sight Glass and Liquid Level Indicator

2.6.2.1 Assembly and Components

Assembly shall be pressure- and temperature-rated and constructed of materials suitable for the service. Glass shall be borosilicate type. Ferrous components subject to condensation shall be electro-galvanized.

2.6.2.2 Gauge Glass

Gauge glass shall include top and bottom isolation valves fitted with automatic checks, and packing followers; red-line or green-line gauge glass; elastomer or polymer packing to suit the service; and gauge glass guard.

2.6.2.3 Bull's-Eye and Inline Sight Glass Reflex Lens

Bull's-eye and inline sight glass reflex lens shall be provided for dead-end liquid service. For pipe line mounting, two plain lenses in one body suitable for backlighted viewing shall be provided.

2.6.2.4 Moisture Indicator

Indicator shall be a self-reversible action, moisture reactive, color changing media. Indicator shall be furnished with full-color-printing tag containing color, moisture and temperature criteria. Unless otherwise indicated, the moisture indicator shall be an integral part of each corresponding sight glass.

2.6.3 Flexible Pipe Connectors

Connector shall be a composite of interior corrugated phosphor bronze or Type 300 Series stainless steel, as required for fluid service, with exterior reinforcement of bronze, stainless steel or monel wire braid. Assembly shall be constructed with a safety factor of not less than 4 at 300 degrees F. Unless otherwise indicated, the length of a flexible

connector shall be as recommended by the manufacturer for the service intended.

2.6.4 Strainers

Strainers used in refrigerant service shall have brass or cast iron body, Y-or angle-pattern, cleanable, not less than 60-mesh noncorroding screen of an area to provide net free area not less than ten times the pipe diameter with pressure rating compatible with the refrigerant service. Screens shall be stainless steel or monel and reinforced spring-loaded where necessary for bypass-proof construction.

2.6.5 Pressure and Vacuum Gauges

Gauges shall conform to ASME B40.1 and shall be provided with throttling type needle valve or a pulsation dampener and shut-off valve. Gauge shall be a minimum of 3-1/2 inches in diameter with a range from 0 psig to approximately 1.5 times the maximum system working pressure. Each gauge range shall be selected so that at normal operating pressure, the needle is within the middle-third of the range.

2.6.6 Pipe Hangers, Inserts, and Supports

Pipe hangers, inserts, guides, and supports shall conform to MSS SP-58 and MSS SP-69.

2.6.7 Escutcheons

Escutcheons shall be chromium-plated iron or chromium-plated brass, either one piece or split pattern, held in place by internal spring tension or set screws.

2.7 FABRICATION

2.7.1 Factory Coating

Unless otherwise specified, equipment and component items, when fabricated from ferrous metal, shall be factory finished with the manufacturer's standard finish, except that items located outside of buildings shall have weather resistant finishes that will withstand 500 hours exposure to the salt spray test specified in ASTM B 117 using a 5 percent sodium chloride solution. Immediately after completion of the test, the specimen shall show no signs of blistering, wrinkling, cracking, or loss of adhesion and no sign of rust creepage beyond 1/8 inch on either side of the scratch mark. Cut edges of galvanized surfaces where hot-dip galvanized sheet steel is used shall be coated with a zinc-rich coating conforming to ASTM D 520, Type I.

2.8 SUPPLEMENTAL COMPONENTS/SERVICES

2.8.1 Field Applied Insulation

Field applied insulation shall be provided and installed in accordance with Section 15080 THERMAL INSULATION FOR MECHANICAL SYSTEMS.

2.9 SPARE PARTS

Submit spare parts data in accordance with 1.2 SUBMITTALS.

PART 3 EXECUTION

3.1 INSTALLATION

Pipe and fitting installation shall conform to the requirements of ASME B31.1. Pipe shall be cut accurately to measurements established at the jobsite, and worked into place without springing or forcing, completely clearing all windows, doors, and other openings. Cutting or other weakening of the building structure to facilitate piping installation will not be permitted without written approval. Pipe or tubing shall be cut square, shall have burrs removed by reaming, and shall permit free expansion and contraction without causing damage to the building structure, pipe, joints, or hangers.

3.1.1 Directional Changes

Changes in direction shall be made with fittings, except that bending of pipe 4 inches and smaller will be permitted, provided a pipe bender is used and wide weep bends are formed. Mitering or notching pipe or other similar construction to form elbows or tees will not be permitted. The centerline radius of bends shall not be less than 6 diameters of the pipe. Bent pipe showing kinks, wrinkles, flattening, or other malformations will not be accepted.

3.1.2 Functional Requirements

Piping shall be installed 1/2 inch per 10 feet of pipe in the direction of flow to ensure adequate oil drainage. Open ends of refrigerant lines or equipment shall be properly capped or plugged during installation to keep moisture, dirt, or other foreign material out of the system. Piping shall remain capped until installation. Equipment piping shall be in accordance with the equipment manufacturer's recommendations and the contract drawings. Equipment and piping arrangements shall fit into space allotted and allow adequate acceptable clearances for installation, replacement, entry, servicing, and maintenance.

3.1.3 Fittings and End Connections

3.1.3.1 Threaded Connections

Threaded connections shall be made with tapered threads and made tight with PTFE tape complying with ASTM D 3308 or equivalent thread-joint compound applied to the male threads only. Not more than three threads shall show after the joint is made.

3.1.3.2 Brazed Connections

Brazing shall be performed in accordance with AWS Brazing Hdbk, except as modified herein. During brazing, the pipe and fittings shall be filled with a pressure regulated inert gas, such as nitrogen, to prevent the formation of scale. Before brazing copper joints, both the outside of the tube and the inside of the fitting shall be cleaned with a wire fitting brush until the entire joint surface is bright and clean. Brazing flux shall not be used. Surplus brazing material shall be removed at all joints. Steel tubing joints shall be made in accordance with the manufacturer's recommendations. Joints in steel tubing shall be painted with the same material as the baked-on coating within 8 hours after joints are made. Tubing shall be protected against oxidation during brazing by

continuous purging of the inside of the piping using nitrogen. Piping shall be supported prior to brazing and not be sprung or forced.

3.1.3.3 Flared Connections

When flared connections are used, a suitable lubricant shall be used between the back of the flare and the nut in order to avoid tearing the flare while tightening the nut.

3.1.4 Valves

3.1.4.1 General

Refrigerant stop valves shall be installed on each side of each piece of equipment such as compressors condensers, evaporators, receivers, and other similar items in multiple-unit installation, to provide partial system isolation as required for maintenance or repair. Stop valves shall be installed with stems horizontal unless otherwise indicated. Ball valves shall be installed with stems positioned to facilitate operation and maintenance. Isolating valves for pressure gauges and switches shall be external to thermal insulation. Safety switches shall not be fitted with isolation valves. Filter dryers having access ports may be considered a point of isolation. Purge valves shall be provided at all points of systems where accumulated noncondensible gases would prevent proper system operation. Valves shall be furnished to match line size, unless otherwise indicated or approved.

3.1.4.2 Expansion Valves

Expansion valves shall be installed with the thermostatic expansion valve bulb located on top of the suction line when the suction line is less than 2-1/8 inches in diameter and at the 4 o'clock or 8 o'clock position on lines larger than 2-1/8 inches. The bulb shall be securely fastened with two clamps. The bulb shall be insulated. The bulb shall installed in a horizontal portion of the suction line, if possible, with the pigtail on the bottom. If the bulb must be installed in a vertical line, the bulb tubing shall be facing up.

3.1.4.3 Valve Identification

Each system valve, including those which are part of a factory assembly, shall be tagged. Tags shall be in alphanumeric sequence, progressing in direction of fluid flow. Tags shall be embossed, engraved, or stamped plastic or nonferrous metal of various shapes, sized approximately 1-3/8 inch diameter, or equivalent dimension, substantially attached to a component or immediately adjacent thereto.

3.1.5 Strainers

Strainers shall be provided immediately ahead of solenoid valves and expansion devices. Strainers may be an integral part of an expansion valve.

3.1.6 Filter Dryer

A liquid line filter dryer shall be provided on each refrigerant circuit located such that all liquid refrigerant passes through a filter dryer. Dryers shall be sized in accordance with the manufacturer's recommendations for the system in which it is installed. Dryers shall be installed such that it can be isolated from the system, the isolated portion of the system

evacuated, and the filter dryer replaced. Dryers shall be installed in the horizontal position except replaceable core filter dryers may be installed in the vertical position with the access flange on the bottom.

3.1.7 Sight Glass

A moisture indicating sight glass shall be installed in all refrigerant circuits down stream of all filter dryers and where indicated. Site glasses shall be full line size.

3.1.8 Flexible Pipe Connectors

Connectors shall be installed perpendicular to line of motion being isolated. Piping for equipment with bidirectional motion shall be fitted with two flexible connectors, in perpendicular planes. Reinforced elastomer flexible connectors shall be installed in accordance with manufacturer's instructions. Piping guides and restraints related to flexible connectors shall be provided as required.

3.1.9 Pipe Hangers, Inserts, and Supports

Pipe hangers, inserts, and supports shall conform to MSS SP-58 and MSS SP-69, except as modified herein. Pipe hanger types 5, 12, and 26 shall not be used. Hangers used to support piping 2 inches and larger shall be fabricated to permit adequate adjustment after erection while still supporting the load. Piping subjected to vertical movement, when operating temperatures exceed ambient temperatures, shall be supported by variable spring hangers and supports or by constant support hangers.

3.1.9.1 Hangers

Type 3 shall not be used on insulated piping. Type 24 may be used only on trapeze hanger systems or on fabricated frames.

3.1.9.2 Inserts

Type 18 inserts shall be secured to concrete forms before concrete is placed. Continuous inserts which allow more adjustments may be used if they otherwise meet the requirements for Type 18 inserts.

3.1.9.3 C-Clamps

Type 19 and 23 C-clamps shall be torqued per MSS SP-69 and have both locknuts and retaining devices, furnished by the manufacturer. Field-fabricated C-clamp bodies or retaining devices are not acceptable.

3.1.9.4 Angle Attachments

Type 20 attachments used on angles and channels shall be furnished with an added malleable-iron heel plate or adapter.

3.1.9.5 Saddles and Shields

Where Type 39 saddle or Type 40 shield are permitted for a particular pipe attachment application, the Type 39 saddle, connected to the pipe, shall be used on all pipe 4 inches and larger when the temperature of the medium is 60 degrees F or higher. Type 40 shields shall be used on all piping less than 4 inches and all piping 4 inches and larger carrying medium less than 60 degrees F. A high density insulation insert of cellular glass shall be

used under the Type 40 shield for piping 2 inches and larger.

3.1.9.6 Horizontal Pipe Supports

Horizontal pipe supports shall be spaced as specified in MSS SP-69 and a support shall be installed not over 1 foot from the pipe fitting joint at each change in direction of the piping. Pipe supports shall be spaced not over 5 feet apart at valves. Pipe hanger loads suspended from steel joist with hanger loads between panel points in excess of 50 pounds shall have the excess hanger loads suspended from panel points.

3.1.9.7 Vertical Pipe Supports

Vertical pipe shall be supported at each floor, except at slab-on-grade, and at intervals of not more than 15 feet, not more than 8 feetfrom end of risers, and at vent terminations.

3.1.9.8 Pipe Guides

Type 35 guides using, steel, reinforced polytetrafluoroethylene (PTFE) or graphite slides shall be provided where required to allow longitudinal pipe movement. Lateral restraints shall be provided as required. Slide materials shall be suitable for the system operating temperatures, atmospheric conditions, and bearing loads encountered.

3.1.9.9 Steel Slides

Where steel slides do not require provisions for restraint of lateral movement, an alternate guide method may be used. On piping 4 inches and larger, a Type 39 saddle shall be used. On piping under 4 inches, a Type 40 protection shield may be attached to the pipe or insulation and freely rest on a steel slide plate.

3.1.9.10 High Temperature Guides with Cradles

Where there are high system temperatures and welding to piping is not desirable, then the Type 35 guide shall include a pipe cradle, welded to the guide structure and strapped securely to the pipe. The pipe shall be separated from the slide material by at least 4 inches, or by an amount adequate for the insulation, whichever is greater.

3.1.9.11 Multiple Pipe Runs

In the support of multiple pipe runs on a common base member, a clip or clamp shall be used where each pipe crosses the base support member. Spacing of the base support members shall not exceed the hanger and support spacing required for an individual pipe in the multiple pipe run.

3.1.9.12 Seismic Requirements

Piping and attached valves shall be supported and braced to resist seismic loads as specified under Section 15070 SEISMIC PROTECTION FOR MECHANICAL EQUIPMENT as shown on the drawings. Structural steel required for reinforcement to properly support piping, headers, and equipment but not shown shall be provided under this section. Material used for support shall be as specified under Section 05120 STRUCTURAL STEEL.

3.1.9.13 Structural Attachments

Attachment to building structure concrete and masonry shall be by cast-in concrete inserts, built-in anchors, or masonry anchor devices. Inserts and anchors shall be applied with a safety factor not less than 5. Supports shall not be attached to metal decking. Masonry anchors for overhead applications shall be constructed of ferrous materials only. Structural steel brackets required to support piping, headers, and equipment, but not shown, shall be provided under this section. Material used for support shall be as specified under Section 05120 STRUCTURAL STEEL.

3.1.10 Pipe Alignment Guides

Pipe alignment guides shall be provided where indicated for expansion loops, offsets, and bends and as recommended by the manufacturer for expansion joints, not to exceed 5 feet on each side of each expansion joint, and in lines 4 inches or smaller not more than 2 feet on each side of the joint.

3.1.11 Pipe Anchors

Anchors shall be provided wherever necessary or indicated to localize expansion or to prevent undue strain on piping. Anchors shall consist of heavy steel collars with lugs and bolts for clamping and attaching anchor braces, unless otherwise indicated. Anchor braces shall be installed in the most effective manner to secure the desired results using turnbuckles where required. Supports, anchors, or stays shall not be attached where they will injure the structure or adjacent construction during installation or by the weight of expansion of the pipeline. Where pipe and conduit penetrations of vapor barrier sealed surfaces occur, these items shall be anchored immediately adjacent to each penetrated surface, to provide essentially zero movement within penetration seal. Detailed drawings of pipe anchors shall be submitted for approval before installation.

3.1.12 Building Surface Penetrations

Sleeves shall not be installed in structural members except where indicated or approved. Sleeves in nonload bearing surfaces shall be galvanized sheet metal, conforming to ASTM A 653/A 653M, Coating Class G-90, 20 gauge. Sleeves in load bearing surfaces shall be uncoated carbon steel pipe, conforming to ASTM A 53/A 53M, Standard weight. Sealants shall be applied to moisture and oil-free surfaces and elastomers to not less than 1/2 inch depth. Sleeves shall not be installed in structural members.

3.1.12.1 General Service Areas

Each sleeve shall extend through its respective wall, floor, or roof, and shall be cut flush with each surface. Pipes passing through concrete or masonry wall or concrete floors or roofs shall be provided with pipe sleeves fitted into place at the time of construction. Sleeves shall be of such size as to provide a minimum of 1/4 inch all-around clearance between bare pipe and sleeves or between jacketed-insulation and sleeves. Except in pipe chases or interior walls, the annular space between pipe and sleeve or between jacket over-insulation and sleeve shall be sealed in accordance with Section 07900 JOINT SEALING.

3.1.12.2 Waterproof Penetrations

Pipes passing through roof or floor waterproofing membrane shall be installed through a 17 ounce copper sleeve, or a 0.032 inch thick aluminum sleeve, each within an integral skirt or flange. Flashing sleeve shall be

suitably formed, and skirt or flange shall extend not less than 8 inches from the pipe and be set over the roof or floor membrane in a troweled coating of bituminous cement. The flashing sleeve shall extend up the pipe a minimum of 2 inches above the roof or floor penetration. The annular space between the flashing sleeve and the bare pipe or between the flashing sleeve and the metal-jacket-covered insulation shall be sealed as indicated. Penetrations shall be sealed by either one of the following methods.

a. Waterproofing Clamping Flange: Pipes up to and including 10 inches in diameter passing through roof or floor waterproofing membrane may be installed through a cast iron sleeve with caulking recess, anchor lugs, flashing clamp device, and pressure ring with brass bolts. Waterproofing membrane shall be clamped into place and sealant shall be placed in the caulking recess.

b. Modular Mechanical Type Sealing Assembly: In lieu of a waterproofing clamping flange and caulking and sealing of annular space between pipe and sleeve or conduit and sleeve, a modular mechanical type sealing assembly may be installed. Seals shall consist of interlocking synthetic rubber links shaped to continuously fill the annular space between the pipe/conduit and sleeve with corrosion protected carbon steel bolts, nuts, and pressure plates. Links shall be loosely assembled with bolts to form a continuous rubber belt around the pipe with a pressure plate under each bolt head and each nut. After the seal assembly is properly positioned in the sleeve, tightening of the bolt shall cause the rubber sealing elements to expand and provide a watertight seal rubber sealing elements to expand and provide a watertight seal between the pipe/conduit seal between the pipe/conduit and the sleeve. Each seal assembly shall be sized as recommended by the manufacturer to fit the pipe/conduit and sleeve involved. The Contractor electing to use the modular mechanical type seals shall provide sleeves of the proper diameters.

3.1.12.3 Fire-Rated Penetrations

Penetration of fire-rated walls, partitions, and floors shall be sealed as specified in Section 07840 FIRESTOPPING.

3.1.12.4 Escutcheons

Finished surfaces where exposed piping, bare or insulated, pass through floors, walls, or ceilings, except in boiler, utility, or equipment rooms, shall be provided with escutcheons. Where sleeves project slightly from floors, special deep-type escutcheons shall be used. Escutcheon shall be secured to pipe or pipe covering.

3.1.13 Access Panels

Access panels shall be provided for all concealed valves, vents, controls, and items requiring inspection or maintenance. Access panels shall be of sufficient size and located so that the concealed items may be serviced and maintained or completely removed and replaced. Access panels shall be as specified in Section 05500 MISCELLANEOUS METALS.

3.1.14 Field Applied Insulation

Field installed insulation shall be as specified in Section 15080 THERMAL

INSULATION FOR MECHANICAL SYSTEMS, except as defined differently herein.

3.1.15 Field Painting

Painting required for surfaces not otherwise specified, and finish painting of items only primed at the factory are specified in Section 09900 PAINTING, GENERAL.

3.1.15.1 Color Coding

Color coding for piping identification is specified in Section 09900 PAINTING, GENERAL.

3.2 CLEANING AND ADJUSTING

Clean uncontaminated system(s) by evacuation and purging procedures currently recommended by refrigerant and refrigerant equipment manufacturers, and as specified herein, to remove small amounts of air and moisture. Systems containing moderate amounts of air, moisture, contaminated refrigerant, or any foreign matter shall be considered contaminated systems. Restoring contaminated systems to clean condition including disassembly, component replacement, evacuation, flushing, purging, and re-charging, shall be performed using currently approved refrigerant and refrigeration manufacturer's procedures. Restoring contaminated systems shall be at no additional cost to the Government as determined by the Contracting Officer. Water shall not be used in any procedure or test.

3.3 REFRIGERANT PIPING TESTS

After all components of the refrigerant system have been installed and connected, the entire refrigeration system shall be subjected to pneumatic, evacuation, and startup tests as described herein. Tests shall be conducted in the presence of the Contracting Officer. Water and electricity required for the tests will be furnished by the Government. Any material, equipment, instruments, and personnel required for the test shall be provided by the Contractor. The services of a qualified technician shall be provided as required to perform all tests and procedures indicated herein. Field tests shall be coordinated with Section 15990 TESTING, ADJUSTING, AND BALANCING OF HVAC SYSTEMS.

3.3.1 Preliminary Procedures

Prior to pneumatic testing, equipment which has been factory tested and refrigerant charged as well as equipment which could be damaged or cause personnel injury by imposed test pressure, positive or negative, shall be isolated from the test pressure or removed from the system. Safety relief valves and rupture discs, where not part of factory sealed systems, shall be removed and openings capped or plugged.

3.3.2 Pneumatic Test

Pressure control and excess pressure protection shall be provided at the source of test pressure. Valves shall be wide open, except those leading to the atmosphere. Test gas shall be dry nitrogen, with minus 70 degree F dewpoint and less than 5 ppm oil. Test pressure shall be applied in two stages before any refrigerant pipe is insulated or covered. First stage test shall be at 10 psi with every joint being tested with a thick soap or color indicating solution. Second stage tests shall raise the system to

the minimum refrigerant leakage test pressure specified in ASHRAE 15 with a maximum test pressure 25 percent greater. Pressure above 100 psig shall be raised in 10 percent increments with a pressure acclimatizing period between increments. The initial test pressure shall be recorded along with the ambient temperature to which the system is exposed. Final test pressures of the second stage shall be maintained on the system for a minimum of 24 hours. At the end of the 24 hour period, the system pressure will be recorded along with the ambient temperature to which the system is exposed. A correction factor of 0.3 psi will be allowed for each degree F change between test space initial and final ambient temperature, plus for increase and minus for a decrease. If the corrected system pressure is not exactly equal to the initial system test pressure, then the system shall be investigated for leaking joints. To repair leaks, the joint shall be taken apart, thoroughly cleaned, and reconstructed as a new joint. Joints repaired by caulking, remelting, or back-welding/brazing shall not be acceptable. Following repair, the entire system shall be retested using the pneumatic tests described above. The entire system shall be reassembled once the pneumatic tests are satisfactorily completed.

3.3.3 Evacuation Test

Following satisfactory completion of the pneumatic tests, the pressure shall be relieved and the entire system shall be evacuated to an absolute pressure of 300 micrometers. During evacuation of the system, the ambient temperature shall be higher than 35 degrees F. No more than one system shall be evacuated at one time by one vacuum pump. Once the desired vacuum has been reached, the vacuum line shall be closed and the system shall stand for 1 hour. If the pressure rises over 500 micrometers after the 1 hour period, then the system shall be evacuated again down to 300 micrometers and let set for another 1 hour period. The system shall not be charged until a vacuum of at least 500 micrometers is maintained for a period of 1 hour without the assistance of a vacuum line. If during the testing the pressure continues to rise, check the system for leaks, repair as required, and repeat the evacuation procedure. During evacuation, pressures shall be recorded by a thermocouple-type, electronic-type, or a calibrated-micrometer type gauge.

3.3.4 System Charging and Startup Test

Following satisfactory completion of the evacuation tests, the system shall be charged with the required amount of refrigerant by raising pressure to normal operating pressure and in accordance with manufacturer's procedures. Following charging, the system shall operate with high-side and low-side pressures and corresponding refrigerant temperatures, at design or improved values. The entire system shall be tested for leaks. Fluorocarbon systems shall be tested with halide torch or electronic leak detectors.

3.3.5 Refrigerant Leakage

If a refrigerant leak is discovered after the system has been charged, the leaking portion of the system shall immediately be isolated from the remainder of the system and the refrigerant pumped into the system receiver or other suitable container. Under no circumstances shall the refrigerant be discharged into the atmosphere.

3.3.6 Contractor's Responsibility

The Contractor shall, at all times during the installation and testing of the refrigeration system, take steps to prevent the release of refrigerants

into the atmosphere. The steps shall include, but not be limited to, procedures which will minimize the release of refrigerants to the atmosphere and the use of refrigerant recovery devices to remove refrigerant from the system and store the refrigerant for reuse or reclaim. At no time shall more than 3 ounces of refrigerant be released to the atmosphere in any one occurrence. Any system leaks within the first year shall be repaired in accordance with the requirements herein at no cost to the Government including material, labor, and refrigerant if the leak is the result of defective equipment, material, or installation.

-- End of Section --

SECTION 15190

GAS PIPING SYSTEMS
02/99

PART 1 GENERAL

1.1 REFERENCES

The publications listed below form a part of this specification to the extent referenced. The publications are referred to in the text by basic designation only.

AMERICAN GAS ASSOCIATION (AGA)

AGA Manual	(1994; Addenda/Correction Jan 1996) A.G.A. Plastic Pipe Manual for Gas Service

AMERICAN NATIONAL STANDARDS INSTITUTE (ANSI)

ANSI Z21.45	(1995) Flexible Connectors of Other Than All-Metal Construction for Gas Appliances
ANSI Z21.69	(1992; Z21.69a) Connectors for Movable Gas Appliances

AMERICAN PETROLEUM INSTITUTE (API)

API Spec 6D	(1994; Supple 1 Jun 1996; Supple 2 Dec 1997) Pipeline Valves (Gate, Plug, Ball, and Check Valves)

AMERICAN SOCIETY FOR TESTING AND MATERIALS (ASTM)

ASTM D 2513	(1999a) Thermoplastic Gas Pressure Pipe, Tubing, and Fittings

ASME INTERNATIONAL (ASME)

ASME B1.20.1	(1983; R 1992) Pipe Threads, General Purpose (Inch)
ASME B16.3	(1998) Malleable Iron Threaded Fittings
ASME B16.5	(1996; B16.5a) Pipe Flanges and Flanged Fittings NPS 1/2 thru NPS 24
ASME B16.9	(1993) Factory-Made Wrought Steel Buttwelding Fittings
ASME B16.11	(1996) Forged Fittings, Socket-Welding and Threaded
ASME B16.21	(1992) Nonmetallic Flat Gaskets for Pipe Flanges
ASME B16.33	(1990) Manually Operated Metallic Gas

	Valves for Use in Gas Piping Systems Up to 125 psig (Sizes 1/2 through 2)
ASME B31.1	(1998) Power Piping
ASME B31.2	(1968) Fuel Gas Piping
ASME B36.10M	(1996) Welded and Seamless Wrought Steel Pipe
ASME BPV IX	(1998) Boiler and Pressure Vessel Code; Section IX, Welding and Brazing Qualifications

MANUFACTURERS STANDARDIZATION SOCIETY OF THE VALVE AND FITTINGS INDUSTRY (MSS)

MSS SP-25	(1998) Standard Marking System for Valves, Fittings, Flanges and Unions
MSS SP-58	(1993) Pipe Hangers and Supports - Materials, Design and Manufacture
MSS SP-69	(1996) Pipe Hangers and Supports - Selection and Application

NATIONAL FIRE PROTECTION ASSOCIATION (NFPA)

NFPA 54	(1999) National Fuel Gas Code
NFPA 70	(1999) National Electrical Code

THE SOCIETY FOR PROTECTIVE COATINGS (SSPC)

SSPC SP 6/NACE 3	(1994) Commercial Blast Cleaning

UNDERWRITERS LABORATORIES (UL)

UL Gas&Oil Dir	(1999)Gas and Oil Equipment Directory

1.2 GENERAL REQUIREMENTS

1.2.1 Welding

Piping shall be welded in accordance with qualified procedures using performance qualified welders and welding operators. Procedures and welders shall be qualified in accordance with ASME BPV IX. Welding procedures qualified by others, and welders and welding operators qualified by another employer may be accepted as permitted by ASME B31.1. The Contracting Officer shall be notified at least 24 hours in advance of tests and the tests shall be performed at the work site if practicable. The Contracting Officer shall be furnished with a copy of qualified procedures and a list of names and identification symbols of qualified welders and welding operators. The welder or welding operator shall apply his assigned symbol near each weld he makes as a permanent record. Structural members shall be welded in accordance with Section 05090 WELDING, STRUCTURAL. Submit welder qualifications in accordance with 1.3 SUBMITTALS.

1.2.2 Standard Products

Materials and equipment shall be the standard products of a manufacturer regularly engaged in the manufacture of the products and shall essentially duplicate items that have been in satisfactory use for at least 2 years prior to bid opening. Asbestos or products containing asbestos shall not be used. Manufacturer's descriptive data and installation instructions shall be submitted for approval for compression-type mechanical joints used in joining dissimilar materials and for insulating joints. Valves, flanges and fittings shall be marked in accordance with MSS SP-25.

1.2.3 Verification of Dimensions

The Contractor shall become familiar with all details of the work, verify all dimensions in the field, and shall advise the Contracting Officer of any discrepancy before performing the work.

1.3 SUBMITTALS

Government approval is required for submittals with a "G" designation; submittals not having a "G" designation are for information only. When used, a designation following the "G" designation identifies the office that will review the submittal for the Government. The following shall be submitted in accordance with Section 01330 SUBMITTAL PROCEDURES:

SD-02 Shop Drawings

Gas Piping System; G

Drawings showing location, size and all branches of pipeline; location of all required shutoff valves; and instructions necessary for the installation of connectors and supports.

SD-03 Product Data

Qualifications; G

Qualified procedures and a list of names and identification symbols of qualified welders and welding operators.

SD-06 Test Reports

Pressure Tests;

Test reports in booklet form tabulating test and measurements performed. The reports shall be dated after award of this contract, shall state the contractor's name and address, shall name the project and location, and shall list the specific requirements which are being certified.

PART 2 PRODUCTS

2.1 PIPE AND FITTINGS

2.1.1 Steel Pipe, Joints, and Fittings

Steel pipe shall conform to ASME B36.10M. Malleable-iron threaded fittings shall conform to ASME B16.3. Steel pipe flanges and flanged fittings including bolts, nuts, and bolt pattern shall be in accordance with ASME B16.5. Wrought steel buttwelding fittings shall conform to ASME B16.9. Socket welding and threaded forged steel fittings shall conform to ASME

B16.11.

2.1.2 Thermoplastic Pipe, Tubing, Joints, and Fittings

Thermoplastic pipe, tubing, joints and fittings shall conform to ASTM D 2513.

2.1.3 Sealants for Steel Pipe Threaded Joints

Joint sealing compound shall be listed in UL Gas&Oil Dir, Class 20 or less. Tetrafluoroethylene tape shall conform to UL Gas&Oil Dir.

2.1.4 Identification

Pipe flow markings and metal tags shall be provided as required.

2.1.5 Flange Gaskets

Gaskets shall be nonasbestos compressed material in accordance with ASME B16.21, 1/16 inch thickness, full face or self-centering flat ring type. The gaskets shall contain aramid fibers bonded with styrene butadiene rubber (SBR) or nitrile butadiene rubber (NBR) suitable for a maximum 600 degree F service. NBR binder shall be used for hydrocarbon service.

2.1.6 Pipe Threads

Pipe threads shall conform to ASME B1.20.1.

2.1.7 Escutcheons

Escutcheons shall be chromium-plated steel or chromium-plated brass, either one piece or split pattern, held in place by internal spring tension or set screw.

2.1.8 Gas Transition Fittings

Gas transition fittings shall be manufactured steel fittings approved for jointing metallic and thermoplastic or fiberglass pipe. Approved transition fittings are those that conform to AGA Manual requirements for transitions fittings.

2.1.9 Insulating Pipe Joints

2.1.9.1 Insulating Joint Material

Insulating joint material shall be provided between flanged or threaded metallic pipe systems where shown to control galvanic or electrical action.

2.1.9.2 Threaded Pipe Joints

Joints for threaded pipe shall be steel body nut type dielectric unions with insulating gaskets.

2.1.9.3 Flanged Pipe Joints

Joints for flanged pipe shall consist of full face sandwich-type flange insulating gasket of the dielectric type, insulating sleeves for flange bolts, and insulating washers for flange nuts.

2.1.10 Flexible Connectors

Flexible connectors for connecting gas utilization equipment to building gas piping shall conform to ANSI Z21.45. Flexible connectors for movable food service equipment shall conform to ANSI Z21.69.

2.2 VALVES

Valves shall be suitable for shutoff or isolation service and shall conform to the following:

2.2.1 Valves 2 Inches and Smaller

Valves 2 inches and smaller shall conform to ASME B16.33 and shall be of materials and manufacture compatible with system materials used.

2.2.2 Valves 2-1/2 Inches and Larger

Valves 2-1/2 inches and larger shall be carbon steel conforming to API Spec 6D, Class 150.

2.3 PIPE HANGERS AND SUPPORTS

Pipe hangers and supports shall conform to MSS SP-58 and MSS SP-69.

PART 3 EXECUTION

3.1 EXCAVATION AND BACKFILLING

Earthwork shall be as specified in Section 02316 EXCAVATION, TRENCHING AND BACKFILLING FOR UTILITIES SYSTEMS.

3.2 GAS PIPING SYSTEM

Gas piping system shall be from the point of delivery, defined as the outlet of the building regulator, to the connections to each gas utilization device.

3.2.1 Protection of Materials and Components

Pipe and tube openings shall be closed with caps or plugs during installation. Equipment shall be protected from dirt, water, and chemical or mechanical damage. At the completion of all work, the entire system shall be thoroughly cleaned.

3.2.2 Workmanship and Defects

Piping, tubing and fittings shall be clear and free of cutting burrs and defects in structure or threading and shall be thoroughly brushed and chip-and scale-blown. Defects in piping, tubing or fittings shall not be repaired. When defective piping, tubing, or fittings are located in a system, the defective material shall be replaced.

3.3 PROTECTIVE COVERING

3.3.1 Aboveground Metallic Piping Systems

3.3.1.1 Ferrous Surfaces

Shop primed surfaces shall be touched up with ferrous metal primer.

Surfaces that have not been shop primed shall be solvent cleaned. Surfaces that contain loose rust, loose mill scale and other foreign substances shall be commercial sand blasted conforming to SSPC SP 6/NACE 3 and primed with ferrous metal primer. Primed surface shall be finished with two coats of exterior oil paint.

3.4 INSTALLATION

Installation of the gas system shall be in conformance with the manufacturer's recommendations and applicable provisions of NFPA 54, AGA Manual, and as indicated. Pipe cutting shall be done without damage to the pipe. Unless otherwise authorized, cutting shall be done by an approved type of mechanical cutter. Wheel cutters shall be used where practicable. On steel pipe 6 inches and larger, an approved gas cutting and beveling machine may be used.

3.4.1 Metallic Piping Installation

Changes in direction of piping shall be made with fittings only; mitering or notching pipe to form elbows and tees or other similar type construction will not be permitted. Branch connection may be made with either tees or forged branch outlet fittings. Branch outlet fittings shall be forged, flared for improvement of flow where attached to the run, and reinforced against external strains.

3.4.2 Thermoplastic and Fiberglass Piping, Tubing, and Fittings

Thermoplastic and fiberglass piping, tubing, and fittings shall be installed underground only. Piping shall be buried a minimum of 18 inches below grade. The piping shall be installed to avoid excessive stresses due to thermal contraction. Thermoplastic and fiberglass piping shall only be allowed as indicated.

3.4.3 Connections Between Metallic and Plastic Piping

Connections shall be made only outside, underground, and with approved transition fittings.

3.4.4 Concealed Piping in Buildings

When installing piping which is to be concealed, unions, tubing fittings, running threads, right- and left-hand couplings, bushings, and swing joints made by combinations of fittings shall not be used.

3.4.4.1 Piping in Partitions

Concealed piping shall be located in hollow rather than solid partitions. Tubing passing through walls or partitions shall be protected against physical damage.

3.4.5 Aboveground Piping

Aboveground piping shall be run as straight as practicable along the alignment indicated and with a minimum of joints. Piping shall be separately supported. Exposed horizontal piping shall not be installed farther than 6 inches from nearest parallel wall in laundry areas where clothes hanging could be attempted.

3.4.6 Final Gas Connections

Unless otherwise specified, final connections shall be made with rigid metallic pipe and fittings. Flexible connectors may be used for final connections to gas utilization equipment. In addition to cautions listed in instructions required by ANSI standards for flexible connectors, insure that flexible connectors do not pass through equipment cabinet. Provide accessible gas shutoff valve and coupling for each gas equipment item.

3.5 PIPE JOINTS

Pipe joints shall be designed and installed to effectively sustain the longitudinal pull-out forces caused by contraction of the piping or superimposed loads.

3.5.1 Threaded Metallic Joints

Threaded joints in metallic pipe shall have tapered threads evenly cut and shall be made with UL approved graphite joint sealing compound for gas service or tetrafluoroethylene tape applied to the male threads only. Threaded joints up to 1-1/2 inches in diameter may be made with approved tetrafluoroethylene tape. Threaded joints up to 2 inches in diameter may be made with approved joint sealing compound. After cutting and before threading, pipe shall be reamed and burrs shall be removed. Caulking of threaded joints to stop or prevent leaks shall not be permitted.

3.5.2 Welded Metallic Joints

Beveling, alignment, heat treatment, and inspection of welds shall conform to ASME B31.2. Weld defects shall be removed and repairs made to the weld, or the weld joints shall be entirely removed and rewelded. After filler metal has been removed from its original package, it shall be protected or stored so that its characteristics or welding properties are not affected adversely. Electrodes that have been wetted or have lost any of their coating shall not be used.

3.5.3 Thermoplastic Joints

Jointing procedures shall conform to AGA Manual. Solvent cement or heat of fusion joints shall not be made between different kinds of plastics.

3.5.4 Joining Thermoplastic to Metallic Piping or Tubing

When compression type mechanical joints are used, the gasket material in the fittings shall be compatible with the plastic piping and with the gas in the system. An internal tubular rigid stiffener shall be used in conjunction with the fitting, and the stiffener shall be flush with end of the pipe or tubing and shall extend at least to the outside end of the compression fitting when installed. The stiffener shall be free of rough or sharp edges and shall not be a force fit in the plastic. A split tubular stiffener shall not be used.

3.6 PIPE SLEEVES

Pipes passing through concrete or masonry walls or concrete floors or roofs shall be provided with pipe sleeves fitted into place at the time of construction. Sleeves shall not be installed in structural members except where indicated or approved. All rectangular and square openings shall be as detailed. Each sleeve shall extend through its respective wall, floor or roof, and shall be cut flush with each surface, except in mechanical

room floors not located on grade where clamping flanges or riser pipe clamps are used. Sleeves in mechanical room floors above grade shall extend at least 4 inches above finish floor. Unless otherwise indicated, sleeves shall be large enough to provide a minimum clearance of 1/4 inch all around the pipe. Sleeves in bearing walls, waterproofing membrane floors, and wet areas shall be steel pipe. Sleeves in nonbearing walls, floors, or ceilings may be steel pipe, galvanized sheet metal with lock-type longitudinal seam, or moisture-resistant fiber or plastic. For penetrations of fire walls, fire partitions and floors which are not on grade, the annular space between the pipe and sleeve shall be sealed with firestopping material and sealant that meet the requirement of Section 07840 FIRESTOPPING.

3.7 PIPES PENETRATING WATERPROOFING MEMBRANES

Pipes penetrating waterproofing membranes shall be installed as specified in Section 15400 PLUMBING, GENERAL PURPOSE.

3.8 FIRE SEAL

Penetrations of fire rated partitions, walls and floors shall be in accordance with Section 07840 FIRESTOPPING.

3.9 ESCUTCHEONS

Escutcheons shall be provided for all finished surfaces where gas piping passes through floors, walls, or ceilings except in boiler, utility, or equipment rooms.

3.10 SPECIAL REQUIREMENTS

Drips, grading of the lines, freeze protection, and branch outlet locations shall be as shown and shall conform to the requirements of NFPA 54.

3.11 BUILDING STRUCTURE

Building structure shall not be weakened by the installation of any gas piping. Beams or joists shall not be cut or notched.

3.12 PIPING SYSTEM SUPPORTS

Gas piping systems in buildings shall be supported with pipe hooks, metal pipe straps, bands or hangers suitable for the size of piping or tubing. Gas piping system shall not be supported by other piping. Spacing of supports in gas piping and tubing installations shall conform to the requirements of NFPA 54. The selection and application of supports in gas piping and tubing installations shall conform to the requirements of MSS SP-69. In the support of multiple pipe runs on a common base member, a clip or clamp shall be used where each pipe crosses the base support member. Spacing of the base support members shall not exceed the hanger and support spacing required for any of the individual pipes in the multiple pipe run. The clips or clamps shall be rigidly connected to the common base member. A clearance of 1/8 inch shall be provided between the pipe and clip or clamp for all piping which may be subjected to thermal expansion.

3.13 ELECTRICAL BONDING AND GROUNDING

The gas piping system within the building shall be electrically continuous

and bonded to a grounding electrode as required by NFPA 70. Conventional flange joints allow sufficient current flow to satisfy this requirement.

3.14 SHUTOFF VALVE

Main gas shutoff valve controlling the gas piping system shall be easily accessible for operation and shall be installed as indicated, protected from physical damage, and marked with a metal tag to clearly identify the piping system controlled.

3.15 TESTING

Before any section of a gas piping system is put into service, it shall be carefully tested to assure that it is gastight. Prior to testing, the system shall be blown out, cleaned and cleared of all foreign material. Each joint shall be tested by means of an approved gas detector, soap and water, or an equivalent nonflammable solution. Testing shall be completed before any work is covered, enclosed, or concealed. All testing of piping systems shall be done with due regard for the safety of employees and the public during the test. Bulkheads, anchorage and bracing suitably designed to resist test pressures shall be installed if necessary. Oxygen shall not be used as a testing medium.

3.15.1 Pressure Tests

Before appliances are connected, piping systems shall be filled with air or an inert gas and shall withstand a minimum pressure of 3 pounds gauge for a period of not less than 10 minutes as specified in NFPA 54 without showing any drop in pressure. Oxygen shall not be used. Pressure shall be measured with a mercury manometer, slope gauge, or an equivalent device so calibrated as to be read in increments of not greater than 0.1 pound. The source of pressure shall be isolated before the pressure tests are made.

3.15.2 Test With Gas

Before turning gas under pressure into any piping, all openings from which gas can escape shall be closed. Immediately after turning on the gas, the piping system shall be checked for leakage by using a laboratory-certified gas meter, an appliance orifice, a manometer, or equivalent device. All testing shall conform to the requirements of NFPA 54. If leakage is recorded, the gas supply shall be shut off, the leak shall be repaired, and the tests repeated until all leaks have been stopped.

3.15.3 Purging

After testing is completed, and before connecting any appliances, all gas piping shall be fully purged. Piping shall not be purged into the combustion chamber of an appliance. The open end of piping systems being purged shall not discharge into confined spaces or areas where there are ignition sources unless the safety precautions recommended in NFPA 54 are followed.

3.15.4 Labor, Materials and Equipment

All labor, materials and equipment necessary for conducting the testing and purging shall be furnished by the Contractor.

3.16 FIELD PAINTING

Painting required for surfaces not otherwise specified, and finish painting of items only primed at the factory are specified in Section 09900 PAINTING, GENERAL.

3.17 PIPE COLOR CODE MARKING

Color code marking of piping shall be as specified in Section 09900 PAINTING, GENERAL.

-- End of Section --

SECTION 15400

PLUMBING, GENERAL PURPOSE
02/01

PART 1 GENERAL

1.1 REFERENCES

The publications listed below form a part of this specification to the extent referenced. The publications are referred to in the text by basic designation only.

AIR CONDITIONING AND REFRIGERATION INSTITUTE (ARI)

ARI 700	(1995; Apx C) Specifications for Fluorocarbon and Other Refrigerants
ARI 1010	(1994) Self-Contained, Mechanically Refrigerated Drinking-Water Coolers

AMERICAN NATIONAL STANDARDS INSTITUTE (ANSI)

ANSI Z21.10.1	(1998) Gas Water Heaters Vol. I, Water Heaters with Input Ratings of 75,000 Btu Per Hour or Less
ANSI Z21.10.3	(1998) Gas Water Heaters Vol. III, Storage Water Heaters with Input Ratings Above 75,000 Btu Per Hour, Circulating and Instantaneous Water Heaters
ANSI Z21.22	(1986; Z21.22a) Relief Valves and Automatic Gas Shutoff Devices for Hot Water Supply Systems

AMERICAN SOCIETY FOR TESTING AND MATERIALS (ASTM)

ASTM A 47/A 47M	(1999) Ferritic Malleable Iron Castings
ASTM A 53/A 53M	(1999b) Pipe, Steel, Black and Hot-Dipped, Zinc-Coated, Welded and Seamless
ASTM A 74	(1998) Cast Iron Soil Pipe and Fittings
ASTM A 105/A 105M	(1998) Carbon Steel Forgings for Piping Applications
ASTM A 183	(1983; R 1998) Carbon Steel Track Bolts and Nuts
ASTM A 193/A 193M	(1999a) Alloy-Steel and Stainless Steel Bolting Materials for High-Temperature Service
ASTM A 515/A 515M	(1989; R 1997) Pressure Vessel Plates, Carbon Steel, for Intermediate- and

	Higher-Temperature Service
ASTM A 516/A 516M	(1990; R 1996) Pressure Vessel Plates, Carbon Steel, for Moderate- and Lower-Temperature Service
ASTM A 536	(1984; R 1999el) Ductile Iron Castings
ASTM A 888	(1998el) Hubless Cast Iron Soil Pipe and Fittings for Sanitary and Storm Drain, Waste, and Vent Piping Applications
ASTM B 32	(1996) Solder Metal
ASTM B 42	(1998) Seamless Copper Pipe, Standard Sizes
ASTM B 43	(1998) Seamless Red Brass Pipe, Standard Sizes
ASTM B 88	(1999) Seamless Copper Water Tube
ASTM B 88M	(1999) Seamless Copper Water Tube (Metric)
ASTM B 306	(1999) Copper Drainage Tube (DWV)
ASTM B 370	(1998) Copper Sheet and Strip for Building Construction
ASTM B 584	(1998a) Copper Alloy Sand Castings for General Applications
ASTM B 813	(1993) Liquid and Paste Fluxes for Soldering Applications of Copper and Copper Alloy Tube
ASTM B 828	(1998) Making Capillary Joints by Soldering of Copper and Copper Alloy Tube and Fittings
ASTM C 564	(1997) Rubber Gaskets for Cast Iron Soil Pipe and Fittings
ASTM C 920	(1998) Elastomeric Joint Sealants
ASTM D 2000	(1999) Rubber Products in Automotive Applications
ASTM D 2235	(1996a) Solvent Cement for Acrylonitrile-Butadiene-Styrene (ABS) Plastic Pipe and Fittings
ASTM D 2564	(1996a) Solvent Cements for Poly(Vinyl Chloride) (PVC) Plastic Piping Systems
ASTM D 2661	(1997ael) Acrylonitrile-Butadiene-Styrene (ABS) Schedule 40 Plastic Drain, Waste, and Vent Pipe and Fittings
ASTM D 2665	(1998) Poly(Vinyl Chloride) (PVC) Plastic

	Drain, Waste, and Vent Pipe and Fittings
ASTM D 2822	(1991; R 1997el) Asphalt Roof Cement
ASTM D 2855	(1996) Making Solvent-Cemented Joints with Poly(Vinyl Chloride) (PVC) Pipe and Fittings
ASTM D 3138	(1995) Solvent Cements for Transition Joints Between Acrylonitrile-Butadiene-Styrene (ABS) and Poly(Vinyl Chloride) (PVC) Non-Pressure Piping Components
ASTM D 3139	(1998) Joints for Plastic Pressure Pipes Using Flexible Elastomeric Seals
ASTM D 3212	(1996a) Joints for Drain and Sewer Plastic Pipes Using Flexible Elastomeric Seals
ASTM D 3308	(1997) PTFE Resin Skived Tape
ASTM D 3311	(1994) Drain, Waste, and Vent (DWV) Plastic Fittings Patterns
ASTM E 1	(1998) ASTM Thermometers
ASTM F 409	(1999a) Thermoplastic Accessible and Replaceable Plastic Tube and Tubular Fittings
ASTM F 477	(1999) Elastomeric Seals (Gaskets) for Joining Plastic Pipe
ASTM F 628	(1999el) Acrylonitrile-Butadiene-Styrene (ABS) Schedule 40 Plastic Drain, Waste, and Vent Pipe with a Cellular Core
ASTM F 891	(1998el) Coextruded Poly(Vinyl Chloride) (PVC) Plastic Pipe with a Cellular Core
ASTM F 1760	(1997) Coextruded Poly(Vinyl Chloride) (PVC) Non-Pressure Plastic Pipe Having Reprocessed-Recycled Content

AMERICAN SOCIETY OF HEATING, REFRIGERATING AND AIR-CONDITIONING ENGINEERS (ASHRAE)

ASHRAE 34	(1997) Number Designation and Safety Classification of Refrigerants
ASHRAE 90.1	(1989; 90.1b; 90.1c; 90.1d; 90.1e; 90.1g; 90.1i; 90.1l-1995; 90.1m-1995; 90.1n-1997) Energy Efficient Design of New Buildings Except Low-Rise Residential Buildings

ASME INTERNATIONAL (ASME)

ASME A112.1.2	(1991; R 1998) Air Gaps in Plumbing Systems

ASME A112.6.1M	(1997) Supports for Off-the-Floor Plumbing Fixtures for Public Use
ASME A112.14.1	(1975; R 1998) Backwater Valves
ASME A112.19.2M	(1998) Vitreous China Plumbing Fixtures
ASME A112.21.1M	(1991; R 1998) Floor Drains
ASME A112.21.2M	(1983) Roof Drains
ASME A112.36.2M	(1991; R 1998) Cleanouts
ASME B1.20.1	(1983; R 1992) Pipe Threads, General Purpose (Inch)
ASME B16.3	(1998) Malleable Iron Threaded Fittings
ASME B16.5	(1996; B16.5a) Pipe Flanges and Flanged Fittings NPS 1/2 thru NPS 24
ASME B16.15	(1985; R 1994) Cast Bronze Threaded Fittings Classes 125 and 250
ASME B16.18	(1984; R 1994) Cast Copper Alloy Solder Joint Pressure Fittings
ASME B16.21	(1992) Nonmetallic Flat Gaskets for Pipe Flanges
ASME B16.22	(1995; B16.22a1998) Wrought Copper and Copper Alloy Solder Joint Pressure Fittings
ASME B16.23	(1992; Errata Jan 1994) Cast Copper Alloy Solder Joint Drainage Fittings - DWV
ASME B16.24	(1991; R 1998) Cast Copper Alloy Pipe Flanges, Class 150, 300, 400, 600, 900, 1500, and 2500, and Flanged Fittings, Class 150 and 300
ASME B16.29	(1994) Wrought Copper and Wrought Copper Alloy Solder Joint Drainage Fittings - DWV
ASME B16.34	(1997) Valves - Flanged, Threaded, and Welding End
ASME B16.39	(1998) Malleable Iron Threaded Pipe Unions Classes 150, 250, and 300
ASME B31.1	(1998) Power Piping
ASME B31.5	(1992; B31.5a1994) Refrigeration Piping
ASME B40.1	(1991) Gauges - Pressure Indicating Dial Type - Elastic Element
ASME BPV IX	(1998) Boiler and Pressure Vessel Code;

	Section IX, Welding and Brazing Qualifications

AMERICAN SOCIETY OF SANITARY ENGINEERING (ASSE)

ASSE 1001	(1990) Pipe Applied Atmospheric Type Vacuum Breakers
ASSE 1003	(1995) Water Pressure Reducing Valves for Domestic Water Supply Systems
ASSE 1005	(1986) Water Heater Drain Valves - 3/4-Inch Iron Pipe Size
ASSE 1011	(1995) Hose Connection Vacuum Breakers
ASSE 1012	(1995) Backflow Preventers with Intermediate Atmospheric Vent
ASSE 1013	(1993) Reduced Pressure Principle Backflow Preventers
ASSE 1018	(1986) Trap Seal Primer Valves Water Supply Fed
ASSE 1020	(1998) Pressure Vacuum Breaker Assembly (Recommended for Outdoor Usage)
ASSE 1037	(1990; Rev thru Mar 1990) Pressurized Flushing Devices (Flushometers) for Plumbing Fixtures

AMERICAN WATER WORKS ASSOCIATION (AWWA)

AWWA EWW	(1999) Standard Methods for the Examination of Water and Wastewater
AWWA B300	(1999) Hypochlorites
AWWA B301	(1992; Addenda B301a - 1999) Liquid Chlorine
AWWA C105	(1993) Polyethylene Encasement for Ductile-Iron Pipe Systems
AWWA C203	(1997; addenda C203a - 1999) Coal-Tar Protective Coatings and Linings for Steel Water Pipelines - Enamel and Tape - Hot-Applied
AWWA C606	(1997) Grooved and Shouldered Joints
AWWA M20	(1973) Manual: Water Chlorination Principles and Practices

AMERICAN WELDING SOCIETY (AWS)

AWS A5.8	(1992) Filler Metals for Brazing and Braze Welding

AWS B2.2	(1991) Brazing Procedure and Performance Qualification

CAST IRON SOIL PIPE INSTITUTE (CISPI)

CISPI 301	(1997) Hubless Cast Iron Soil Pipe and Fittings for Sanitary and Storm Drain, Waste, and Vent Piping Applications
CISPI 310	(1997) Coupling for Use in Connection with Hubless Cast Iron Soil Pipe and Fittings for Sanitary and Storm Drain, Waste, and Vent Piping Applications
CISPI HSN-85	(1985) Neoprene Rubber Gaskets for Hub and Spigot Cast Iron Soil Pipe and Fittings

CODE OF FEDERAL REGULATIONS (CFR)

10 CFR 430	Energy Conservation Program for Consumer Products
PL 93-523	(1974; Amended 1986) Safe Drinking Water Act

COPPER DEVELOPMENT ASSOCIATION (CDA)

CDA Tube Handbook	(1995) Copper Tube Handbook

FOUNDATION FOR CROSS-CONNECTION CONTROL AND HYDRAULIC RESEARCH (FCCCHR)

FCCCHR-01	(1993) Manual of Cross-Connection Control

HYDRAULIC INSTITUTE (HI)

HI 1.1-1.5	(1994) Centrifugal Pumps

INTERNATIONAL ASSOCIATION OF PLUMBING AND MECHANICAL OFFICIALS (IAPMO)

IAPMO Z124.5	(1997) Plastic Toilet (Water Closets) Seats

INTERNATIONAL CODE COUNCIL (ICC)

CABO A117.1	(1998) Accessible and Usable Buildings and Facilities
ICC Plumbing Code	(2000) International Plumbing Code (IPC)

MANUFACTURERS STANDARDIZATION SOCIETY OF THE VALVE AND FITTINGS INDUSTRY (MSS)

MSS SP-25	(1998) Standard Marking System for Valves, Fittings, Flanges and Unions
MSS SP-44	(1996) Steel Pipeline Flanges

MSS SP-58	(1993) Pipe Hangers and Supports - Materials, Design and Manufacture
MSS SP-67	(1995) Butterfly Valves
MSS SP-69	(1996) Pipe Hangers and Supports - Selection and Application
MSS SP-70	(1998) Cast Iron Gate Valves, Flanged and Threaded Ends
MSS SP-71	(1997) Cast Iron Swing Check Valves, Flanges and Threaded Ends
MSS SP-72	(1999) Ball Valves with Flanged or Butt-Welding Ends for General Service
MSS SP-73	(1991; R 1996) Brazing Joints for Copper and Copper Alloy Pressure Fittings
MSS SP-78	(1998) Cast Iron Plug Valves, Flanged and Threaded Ends
MSS SP-80	(1997) Bronze Gate, Globe, Angle and Check Valves
MSS SP-83	(1995) Class 3000 Steel Pipe Unions Socket-Welding and Threaded
MSS SP-85	(1994) Cast Iron Globe & Angle Valves, Flanged and Threaded Ends
MSS SP-110	(1996) Ball Valves Threaded, Socket-Welding, Solder Joint, Grooved and Flared Ends

PLUMBING-HEATING-COOLING CONTRACTORS NATIONAL ASSOCIATION (NAPHCC)

NAPHCC Plumbing Code	Plumbing Code

NATIONAL ELECTRICAL MANUFACTURERS ASSOCIATION (NEMA)

NEMA 250	(1997) Enclosures for Electrical Equipment (1000 Volts Maximum)

NATIONAL FIRE PROTECTION ASSOCIATION (NFPA)

NFPA 54	(1999) National Fuel Gas Code
NFPA 90A	(1999) Installation of Air Conditioning and Ventilating Systems

NSF INTERNATIONAL (NSF)

NSF 14	(1999) Plastics Piping Components and Related Materials
NSF 61	(1999) Drinking Water System Components -

Health Effects (Sections 1-9)

PLASTIC PIPE AND FITTINGS ASSOCIATION (PPFA)

PPFA-01 (1999) Plastic Pipe in Fire Resistive Construction

PLUMBING AND DRAINAGE INSTITUTE (PDI)

PDI WH 201 (1992) Water Hammer Arresters

SOCIETY OF AUTOMOTIVE ENGINEERS INTERNATIONAL (SAE)

SAE J 1508 (1997) Hose Clamps

1.2 STANDARD PRODUCTS

Specified materials and equipment shall be standard products of a manufacturer regularly engaged in the manufacture of such products. Specified equipment shall essentially duplicate equipment that has performed satisfactorily at least two years prior to bid opening.

1.3 ELECTRICAL WORK

Motors, motor controllers and motor efficiencies shall conform to the requirements of Section 16415 ELECTRICAL WORK, INTERIOR. Electrical motor-driven equipment specified herein shall be provided complete with motors. Equipment shall be rated at 60 Hz, single phase, ac unless otherwise indicated. Where a motor controller is not provided in a motor-control center on the electrical drawings, a motor controller shall be as indicated. Motor controllers shall be provided complete with properly sized thermal-overload protection in each ungrounded conductor, auxiliary contact, and other equipment, at the specified capacity, and including an allowable service factor.

1.4 SUBMITTALS

Government approval is required for submittals with a "G" designation; submittals not having a "G" designation are for information only. When used, a designation following the "G" designation identifies the office that will review the submittal for the Government. The following shall be submitted in accordance with Section 01330 SUBMITTAL PROCEDURES:

SD-02 Shop Drawings

Plumbing System; G

Detail drawings consisting of illustrations, schedules, performance charts, instructions, brochures, diagrams, and other information to illustrate the requirements and operations of each system. Detail drawings for the complete plumbing system including piping layouts and locations of connections; dimensions for roughing-in, foundation, and support points; schematic diagrams and wiring diagrams or connection and interconnection diagrams. Detail drawings shall indicate clearances required for maintenance and operation. Where piping and equipment are to be supported other than as indicated, details shall include loadings and proposed support methods. Mechanical drawing plans,

elevations, views, and details, shall be drawn to scale.

SD-03 Product Data

Welding; G

A copy of qualified procedures and a list of names and identification symbols of qualified welders and welding operators.

Plumbing Fixture Schedule; G

Catalog cuts of specified plumbing fixtures, valves, and related piping system and system location where installed.

Vibration-Absorbing Features; G

Details of vibration-absorbing features, including arrangement, foundation plan, dimensions and specifications.

Plumbing System; G

Diagrams, instructions, and other sheets proposed for posting. Manufacturer's recommendations for the installation of bell and spigot and hubless joints for cast iron soil pipe.

SD-06 Test Reports

Tests, Flushing and Disinfection; G

Test reports in booklet form showing all field tests performed to adjust each component and all field tests performed to prove compliance with the specified performance criteria, completion and testing of the installed system. Each test report shall indicate the final position of controls.

Backflow Prevention Assembly Tests; G

Certification of proper operation shall be as accomplished in accordance with state regulations by an individual certified by the state to perform such tests. If no state requirement exists, the Contractor shall have the manufacturer's representative test the device, to ensure the unit is properly installed and performing as intended. The Contractor shall provide written documentation of the tests performed and signed by the individual performing the tests.

SD-07 Certificates

Materials and Equipment

Where materials or equipment are specified to comply with requirements of AGA, ASME, or NSF proof of such compliance shall be included. The label or listing of the specified agency will be acceptable evidence. In lieu of the label or listing, a written certificate may be submitted from an approved, nationally recognized testing organization equipped to perform such services, stating that the items have been tested and conform to the requirements and testing methods of the specified agency. Where equipment is specified to conform to requirements of the ASME

Boiler and Pressure Vessel Code, the design, fabrication, and installation shall conform to the code.

Bolts

Written certification by the bolt manufacturer that the bolts furnished comply with the specified requirements. The certification shall include illustrations of product-required markings, the date of manufacture, and the number of each type of bolt to be furnished based on this certification.

SD-10 Operation and Maintenance Data

Operation and maintenance data shall be provided for all equipment, components and items of work specified herein where standard data is routinely and commercially available by the manufacturer. Submit in accordance with Section 01781 OPERATION AND MAINTENANCE DATA.

1.5 PERFORMANCE REQUIREMENTS

1.5.1 Welding

Piping shall be welded in accordance with qualified procedures using performance-qualified welders and welding operators. Procedures and welders shall be qualified in accordance with ASME BPV IX. Welding procedures qualified by others, and welders and welding operators qualified by another employer, may be accepted as permitted by ASME B31.1. The Contracting Officer shall be notified 24 hours in advance of tests, and the tests shall be performed at the work site if practicable. Welders or welding operators shall apply their assigned symbols near each weld they make as a permanent record. Structural members shall be welded in accordance with Section 05090 WELDING, STRUCTURAL.

1.5.2 Cathodic Protection and Pipe Joint Bonding

Cathodic protection and pipe joint bonding systems shall be in accordance with Section 13110 CATHODIC PROTECTION SYSTEM (SACRIFICIAL ANODE).

1.6 REGULATORY REQUIREMENTS

Plumbing work shall be in accordance with ICC Plumbing Code.

1.7 PROJECT/SITE CONDITIONS

The Contractor shall become familiar with details of the work, verify dimensions in the field, and advise the Contracting Officer of any discrepancy before performing any work.

PART 2 PRODUCTS

2.1 MATERIALS

Materials and equipment specified to comply with requirements of AGA, ASME, or NSF shall be provided with proof of such compliance. Materials for various services shall be in accordance with TABLES I and II. Pipe schedules shall be selected based on service requirements. Pipe fittings shall be compatible with the applicable pipe materials. Plastic pipe, fittings, and solvent cement shall meet NSF 14 and shall be NSF listed for

the service intended. Plastic pipe, fittings, and solvent cement used for potable hot and cold water service shall bear the NSF seal "NSF-PW." Pipe threads (except dry seal) shall conform to ASME B1.20.1. Grooved pipe couplings and fittings shall be from the same manufacturer. Material or equipment containing lead shall not be used in any potable water system. In line devices such as water meters, building valves, check valves, meter stops, valves, fittings and back flow preventers shall comply with PL 93-523 and NSF 61, Section 8. End point devices such as drinking water fountains, lavatory faucets, kitchen and bar faucets, residential ice makers, supply stops and end point control valves used to dispense water for drinking must meet the requirements of NSF 61, Section 9. Hubless cast-iron soil pipe shall not be installed underground, under concrete floor slabs, or in crawl spaces below kitchen floors. Plastic pipe shall not be installed in air plenums. Plastic pipe shall not be installed in a pressure piping system in buildings greater than three stories including any basement levels.

2.1.1 Pipe Joint Materials

Grooved pipe and hubless cast-iron soil pipe shall not be used under ground. Joints and gasket materials shall conform to the following:

a. Coupling for Cast-Iron Pipe: for hub and spigot type ASTM A 74, AWWA C606. For hubless type: CISPI 310

b. Coupling for Steel Pipe: AWWA C606.

c. Couplings for Grooved Pipe: Copper ASTM A 536.

d. Flange Gaskets: Gaskets shall be made of non-asbestos material in accordance with ASME B16.21. Gaskets shall be flat, 1/16 inch thick, and contain Aramid fibers bonded with Styrene Butadiene Rubber (SBR) or Nitro Butadiene Rubber (NBR). Gaskets shall be the full face or self centering flat ring type. Gaskets used for hydrocarbon service shall be bonded with NBR.

e. Neoprene Gaskets for Hub and Cast-Iron Pipe and Fittings: CISPI HSN-85.

f. Brazing Material: Brazing material shall conform to AWS A5.8, BCuP-5.

g. Brazing Flux: Flux shall be in paste or liquid form appropriate for use with brazing material. Flux shall be as follows: lead-free; have a 100 percent flushable residue; contain slightly acidic reagents; contain potassium borides; and contain fluorides.

h. Solder Material: Solder metal shall conform to ASTM B 32.

i. Solder Flux: Flux shall be liquid form, non-corrosive, and conform to ASTM B 813, Standard Test 1.

j. PTFE Tape: PTFE Tape, for use with Threaded Metal or Plastic Pipe, ASTM D 3308.

k. Rubber Gaskets for Cast-Iron Soil-Pipe and Fittings (hub and spigot type and hubless type): ASTM C 564.

l. Rubber Gaskets for Grooved Pipe: ASTM D 2000, maximum temperature

230 degrees F.

m. Flexible Elastomeric Seals: ASTM D 3139, ASTM D 3212 or ASTM F 477.

n. Bolts and Nuts for Grooved Pipe Couplings: Heat-treated carbon steel, ASTM A 183.

o. Solvent Cement for Transition Joints between ABS and PVC Nonpressure Piping Components: ASTM D 3138.

p. Plastic Solvent Cement for ABS Plastic Pipe: ASTM D 2235.

q. Plastic Solvent Cement for PVC Plastic Pipe: ASTM D 2564 and ASTM D 2855.

r. Flanged fittings including flanges, bolts, nuts, bolt patterns, etc., shall be in accordance with ASME B16.5 class 150 and shall have the manufacturer's trademark affixed in accordance with MSS SP-25. Flange material shall conform to ASTM A 105/A 105M. Blind flange material shall conform to ASTM A 516/A 516M cold service and ASTM A 515/A 515M for hot service. Bolts shall be high strength or intermediate strength with material conforming to ASTM A 193/A 193M.

2.1.2 Miscellaneous Materials

Miscellaneous materials shall conform to the following:

a. Water Hammer Arrester: PDI WH 201.

b. Copper, Sheet and Strip for Building Construction: ASTM B 370.

c. Asphalt Roof Cement: ASTM D 2822.

d. Hose Clamps: SAE J 1508.

e. Supports for Off-The-Floor Plumbing Fixtures: ASME A112.6.1M.

f. Metallic Cleanouts: ASME A112.36.2M.

g. Plumbing Fixture Setting Compound: A preformed flexible ring seal molded from hydrocarbon wax material. The seal material shall be nonvolatile nonasphaltic and contain germicide and provide watertight, gastight, odorproof and verminproof properties.

h. Coal-Tar Protective Coatings and Linings for Steel Water Pipelines: AWWA C203.

i. Hypochlorites: AWWA B300.

j. Liquid Chlorine: AWWA B301.

k. Polyethylene Encasement for Ductile-Iron Piping: AWWA C105.

l. Gauges - Pressure and Vacuum Indicating Dial Type - Elastic Element: ASME B40.1.

m. Thermometers: ASTM E 1.

2.1.3 Pipe Insulation Material

Insulation shall be as specified in Section 15080 THERMAL INSULATION FOR MECHANICAL SYSTEMS.

2.2 PIPE HANGERS, INSERTS, AND SUPPORTS

Pipe hangers, inserts, and supports shall conform to MSS SP-58 and MSS SP-69.

2.3 VALVES

Valves shall be provided on supplies to equipment and fixtures. Valves 2-1/2 inches and smaller shall be bronze with threaded bodies for pipe and solder-type connections for tubing. Valves 3 inches and larger shall have flanged iron bodies and bronze trim. Pressure ratings shall be based upon the application. Grooved end valves may be provided if the manufacturer certifies that the valves meet the performance requirements of applicable MSS standard. Valves shall conform to the following standards:

Description	Standard
Butterfly Valves	MSS SP-67
Cast-Iron Gate Valves, Flanged and Threaded Ends	MSS SP-70
Cast-Iron Swing Check Valves, Flanged and Threaded Ends	MSS SP-71
Ball Valves with Flanged Butt-Welding Ends for General Service	MSS SP-72
Ball Valves Threaded, Socket-Welding, Solder Joint, Grooved and Flared Ends	MSS SP-110
Cast-Iron Plug Valves, Flanged and Threaded Ends	MSS SP-78
Bronze Gate, Globe, Angle, and Check Valves	MSS SP-80
Steel Valves, Socket Welding and Threaded Ends	ASME B16.34
Cast-Iron Globe and Angle Valves, Flanged and Threaded Ends	MSS SP-85
Backwater Valves	ASME A112.14.1
Vacuum Relief Valves	ANSI Z21.22
Water Pressure Reducing Valves	ASSE 1003
Water Heater Drain Valves	ASSE 1005
Trap Seal Primer Valves	ASSE 1018

2.3.1 Backwater Valves

Backwater valves shall be either separate from the floor drain or a combination floor drain, P-trap, and backwater valve, as shown. Valves

shall have cast-iron bodies with cleanouts large enough to permit removal of interior parts. Valves shall be of the flap type, hinged or pivoted, with revolving disks. Hinge pivots, disks, and seats shall be nonferrous metal. Disks shall be slightly open in a no-flow no-backwater condition. Cleanouts shall extend to finished floor and be fitted with threaded countersunk plugs.

2.3.2 Hose Bibbs

Hose bibbs with vacuum-breaker backflow preventer shall be brass with 3/4 inch male inlet threads, hexagon shoulder, and 3/4 inch hose connection. Faucet handle shall be securely attached to stem.

2.3.3 Wall Hydrants

Wall hydrants with vacuum-breaker backflow preventer shall have a nickel-brass or nickel-bronze wall plate or flange with nozzle and detachable key handle. A brass or bronze operating rod shall be provided within a galvanized iron casing of sufficient length to extend through the wall so that the valve is inside the building, and the portion of the hydrant between the outlet and valve is self-draining. A brass or bronze valve with coupling and union elbow having metal-to-metal seat shall be provided. Valve rod and seat washer shall be removable through the face of the hydrant. The hydrant shall have 3/4 inch exposed hose thread on spout and 3/4 inch male pipe thread on inlet.

2.3.4 Relief Valves

Water heaters and hot water storage tanks shall have a combination pressure and temperature (P&T) relief valve. The pressure relief element of a P&T relief valve shall have adequate capacity to prevent excessive pressure buildup in the system when the system is operating at the maximum rate of heat input. The temperature element of a P&T relief valve shall have a relieving capacity which is at least equal to the total input of the heaters when operating at their maximum capacity. Relief valves shall be rated according to ANSI Z21.22. Relief valves for systems where the maximum rate of heat input is less than 200,000 Btuh shall have 3/4 inch minimum inlets, and 3/4 inch outlets. Relief valves for systems where the maximum rate of heat input is greater than 200,000 Btuh shall have 1 inch minimum inlets, and 1 inch outlets. The discharge pipe from the relief valve shall be the size of the valve outlet.

2.3.5 Thermostatic Mixing Valves

Mixing valves, thermostatic type, pressure-balanced or combination thermostatic and pressure-balanced shall be line size and shall be constructed with rough or finish bodies either with or without plating. Each valve shall be constructed to control the mixing of hot and cold water and to deliver water at a desired temperature regardless of pressure or input temperature changes. The control element shall be of an approved type. The body shall be of heavy cast bronze, and interior parts shall be brass, bronze, corrosion-resisting steel or copper. The valve shall be equipped with necessary stops, check valves, unions, and sediment strainers on the inlets. Mixing valves shall maintain water temperature within 5 degrees F of any setting.

2.3.6 Mechanical Trap Primer Valves

ASSE 1018, water-supply-fed type, with 125-psig minimum working pressure.

Bronze body with atmospheric-vented drain chamber. Inlet connection shall be 1/2-inch threaded, union, or solder joint. Gravity drain outlet connection shall be 1/2-inch threaded or solder joint, with distribution chamber as required to feed up to four drains from one trap primer valve.

2.4 FIXTURES

Fixtures shall be water conservation type, in accordance with ICC Plumbing Code. Fixtures for use by the physically handicapped shall be in accordance with CABO A117.1. Vitreous china, nonabsorbent, hard-burned, and vitrified throughout the body shall be provided. Porcelain enameled ware shall have specially selected, clear white, acid-resisting enamel coating evenly applied on surfaces. No fixture will be accepted that shows cracks, crazes, blisters, thin spots, or other flaws. Fixtures shall be equipped with appurtenances such as traps, faucets, stop valves, and drain fittings. Each fixture and piece of equipment requiring connections to the drainage system, except grease interceptors, shall be equipped with a trap. Brass expansion or toggle bolts capped with acorn nuts shall be provided for supports, and polished chromium-plated pipe, valves, and fittings shall be provided where exposed to view. Fixtures with the supply discharge below the rim shall be equipped with backflow preventers. Internal parts of flush and/or flushometer valves, shower mixing valves, shower head face plates, pop-up stoppers of lavatory waste drains, and pop-up stoppers and overflow tees and shoes of bathtub waste drains may contain acetal resin, fluorocarbon, nylon, acrylonitrile-butadiene-styrene (ABS) or other plastic material, if the material has provided satisfactory service under actual commercial or industrial operating conditions for not less than 2 years. Plastic in contact with hot water shall be suitable for 180 degrees F water temperature. Plumbing fixtures shall be as indicated in paragraph PLUMBING FIXTURE SCHEDULE.

2.4.1 Lavatories

Enameled cast-iron lavatories shall be provided with two cast-iron or steel brackets secured to the underside of the apron and drilled for bolting to the wall in a manner similar to the hanger plate. Exposed brackets shall be porcelain enameled. Vitreous china lavatories shall be provided with two integral molded lugs on the back-underside of the fixture and drilled for bolting to the wall in a manner similar to the hanger plate.

2.4.2 Automatic Flushing System

Flushing system shall consist of solenoid-activated flush valve with electrical-operated light beam sensor and pushbutton to energize solenoid. Flushing devices shall be provided as described in paragraph FIXTURES AND FIXTURE TRIMMINGS.

2.5 BACKFLOW PREVENTERS

Backflow preventers shall be approved and listed by the Foundation For Cross-Connection Control & Hydraulic Research. Reduced pressure principle assemblies, double check valve assemblies, atmospheric (nonpressure) type vacuum breakers, and pressure type vacuum breakers shall be tested, approved, and listed in accordance with FCCCHR-01. Backflow preventers with intermediate atmospheric vent shall conform to ASSE 1012. Reduced pressure principle backflow preventers shall conform to ASSE 1013. Hose connection vacuum breakers shall conform to ASSE 1011. Pipe applied atmospheric type vacuum breakers shall conform to ASSE 1001. Pressure vacuum breaker assembly shall conform to ASSE 1020. Air gaps in plumbing

systems shall conform to ASME A112.1.2.

2.6 DRAINS

2.6.1 Floor Drains (FD-A)

Floor and shower drains shall consist of a galvanized body, integral seepage pan, and adjustable perforated or slotted chromium-plated bronze, nickel-bronze, or nickel-brass strainer, consisting of grate and threaded collar. Shower drain strainer shall be square. Floor drains shall be cast iron except where metallic waterproofing membrane is installed. Drains shall be of double drainage pattern for embedding in the floor construction. The seepage pan shall have weep holes or channels for drainage to the drainpipe. The strainer shall be adjustable to floor thickness. A clamping device for attaching flashing or waterproofing membrane to the seepage pan without damaging the flashing or waterproofing membrane shall be provided when required. Drains shall be provided with threaded connection. Between the drain outlet and waste pipe, a neoprene rubber gasket conforming to ASTM C 564 may be installed, provided that the drain is specifically designed for the rubber gasket compression type joint. Floor and shower drains shall conform to ASME A112.21.1M.

2.6.2 Area Drains (FD-B)

Area drains shall be plain pattern with polished stainless steel perforated or slotted grate and bottom outlet. The drain shall be circular or square with a 12 inch nominal overall width or diameter and 10 inch nominal overall depth. Drains shall be cast iron with manufacturer's standard coating, with tractor grate, medium duty. Grate shall be easily lifted out for cleaning. Outlet shall be suitable for inside caulked connection to drain pipe. Drains shall conform to ASME A112.21.1M.

2.6.3 Floor Sinks (FD-C)

Floor sinks shall be square, with 12 inch nominal overall width and 10 inch nominal overall depth. Floor sink shall have an acid-resistant enamel interior finish with cast-iron body, aluminum sediment bucket, and perforated grate of cast iron in industrial areas and stainless steel in finished areas. The outlet pipe size shall be as indicated or of the same size as the connecting pipe.

2.6.4 Boiler Room Drains (FD-D)

Boiler room drains shall have combined drain and trap, hinged grate, removable bucket, and threaded brass cleanout with brass backwater valve. The removable galvanized cast-iron sediment bucket shall have rounded corners to eliminate fouling and shall be equipped with hand grips. Drain shall have a minimum water seal of 4 inches. The grate area shall be not less than 100 square inches.

2.6.5 Sight Drains (FD-E)

Sight drains shall consist of body, integral seepage pan, and adjustable strainer with perforated or slotted grate and funnel extension. The strainer shall have a threaded collar to permit adjustment to floor thickness. Drains shall be of double drainage pattern suitable for embedding in the floor construction. A clamping device for attaching flashing or waterproofing membrane to the seepage pan without damaging the flashing or membrane shall be provided for other than concrete

construction. Drains shall have a galvanized heavy cast-iron body and seepage pan and chromium-plated bronze, nickel-bronze, or nickel-brass strainer and funnel combination. Drains shall be provided with threaded connection and with a separate cast-iron "P" trap, unless otherwise indicated. Drains shall be circular, unless otherwise indicated. The funnel shall be securely mounted over an opening in the center of the strainer. Minimum dimensions shall be as follows:

Area of strainer and collar	36 square inches
Height of funnel	3-3/4 inches
Diameter of lower portion of funnel	2 inches
Diameter of upper portion of funnel	4 inches

2.6.6 Roof Drains and Expansion Joints

Roof drains shall conform to ASME A112.21.2M, with dome and integral flange, and shall have a device for making a watertight connection between roofing and flashing. The whole assembly shall be galvanized heavy pattern cast iron. For aggregate surface roofing, the drain shall be provided with a gravel stop. On roofs other than concrete construction, roof drains shall be complete with underdeck clamp, sump receiver, and an extension for the insulation thickness where applicable. A clamping device for attaching flashing or waterproofing membrane to the seepage pan without damaging the flashing or membrane shall be provided when required to suit the building construction. Strainer openings shall have a combined area equal to twice that of the drain outlet. The outlet shall be equipped to make a proper connection to threaded pipe of the same size as the downspout. An expansion joint of proper size to receive the conductor pipe shall be provided. The expansion joint shall consist of a heavy cast-iron housing, brass or bronze sleeves, brass or bronze fastening bolts and nuts, and gaskets or packing. The sleeve shall have a nominal thickness of not less than 0.134 inch. Gaskets and packing shall be close-cell neoprene, O-ring packing shall be close-cell neoprene of 70 durometer. Packing shall be held in place by a packing gland secured with bolts.

2.7 TRAPS

Unless otherwise specified, traps shall be plastic per ASTM F 409 or copper-alloy adjustable tube type with slip joint inlet and swivel. Traps shall be without a cleanout. Tubes shall be copper alloy with walls not less than 0.032 inch thick within commercial tolerances, except on the outside of bends where the thickness may be reduced slightly in manufacture by usual commercial methods. Inlets shall have rubber washer and copper alloy nuts for slip joints above the discharge level. Swivel joints shall be below the discharge level and shall be of metal-to-metal or metal-to-plastic type as required for the application. Nuts shall have flats for wrench grip. Outlets shall have internal pipe thread, except that when required for the application, the outlets shall have sockets for solder-joint connections. The depth of the water seal shall be not less than 2 inches. The interior diameter shall be not more than 1/8 inch over or under the nominal size, and interior surfaces shall be reasonably smooth throughout. A copper alloy "P" trap assembly consisting of an adjustable "P" trap and threaded trap wall nipple with cast brass wall flange shall be provided for lavatories. The assembly shall be a standard manufactured

unit and may have a rubber-gasketed swivel joint.

2.8 GREASE INTERCEPTOR

Grease interceptor of the size indicated shall be of reinforced concrete or precast concrete construction with two removable access manhole covers, and shall be installed outside the building. Interceptors shall be tested and rated in accordance with PDI G 101. Concrete shall have 3,000 psi minimum compressive strength at 28 days.

2.9 WATER HEATERS

Water heater types and capacities shall be as indicated. Each water heater shall have replaceable anodes. Each gas-fired water heater shall have controls with an adjustable range that includes 120 to 180 degrees F. Hot water systems utilizing recirculation systems shall be tied into building off-hour controls. The thermal efficiencies and standby heat losses shall conform to TABLE III for each type of water heater specified. Plastic materials polyetherimide (PEI) and polyethersulfone (PES) are forbidden to be used for vent piping of combustion gases.

2.9.1 Commercial, Storage, Gas Water Heaters

Water heater shall be direct-vent design with an automatic blower-powered, two-pipe air intake and exhaust system communicating directly with the outside of the building. The blower shall have safety controls that will not allow the operation of the pilot and main burners unless the blower is in operation. Unit shall have a combustion air passage that is internal to the outer jacket of the water heater other than the intake and exhaust connections at the top of the water heater.

Water heater shall be complete with control system, and shall have ASME rated combination pressure and temperature gauge. Heaters shall conform to ANSI Z21.10.1 when input is 75,000 Btu per hour or less or ANSI Z21.10.3 when input is greater than 75,000 Btu per hour. Storage tank shall be manufactured from non-ASME-code steel with 150-psig working pressure. Interior lining shall comply with NSF 61, barrier materials for potable water tank linings. Insulation shall comply with ASHRAE 90.1. Jacket shall be steel, with enamel finish.

2.10 PUMPS

2.10.1 Circulating Pumps

Domestic hot water circulating pumps shall be electrically driven, single-stage, centrifugal, with mechanical seals, suitable for the intended service. Pump capacities, efficiencies, motor sizes, speeds, and impeller types shall be as shown. Pump and motor shall be supported by the piping on which it is installed. The shaft shall be one-piece, heat-treated, corrosion-resisting steel with impeller and smooth-surfaced housing of bronze. Motor shall be totally enclosed, fan-cooled and shall have sufficient horsepower for the service required. Pump shall conform to HI 1.1-1.5. Each pump motor shall be equipped with an across-the-line magnetic controller in a NEMA 250, Type 1 enclosure with "START-STOP" switch in cover. Fractional horsepower pump motors shall have integral thermal overload protection in accordance with Section 16415 ELECTRICAL WORK, INTERIOR. Guards shall shield exposed moving parts.

PART 3 EXECUTION

3.1 GENERAL INSTALLATION REQUIREMENTS

Piping located in air plenums shall conform to NFPA 90A requirements. Plastic pipe shall not be installed in air plenums. Piping located in shafts that constitute air ducts or that enclose air ducts shall be noncombustible in accordance with NFPA 90A. Installation of plastic pipe where in compliance with NFPA may be installed in accordance with PPFA-01. The plumbing system shall be installed complete with necessary fixtures, fittings, traps, valves, and accessories. Water and drainage piping shall be extended 5 feet outside the building, unless otherwise indicated. Drain lines shall be installed with a minimum slope of 2 percent for pipes 3 inches and smaller, 1 percent for pipes 4 inches and larger. A gate valve and drain shall be installed on the water service line inside the building approximately 6 inches above the floor from point of entry. Piping shall be connected to the exterior service lines or capped or plugged if the exterior service is not in place. Sewer and water pipes shall be laid in separate trenches, except when otherwise shown. Exterior underground utilities shall be at least 12 inches below the average local frost depth or as indicated on the drawings. If trenches are closed or the pipes are otherwise covered before being connected to the service lines, the location of the end of each plumbing utility shall be marked with a stake or other acceptable means. Valves shall be installed with control no lower than the valve body.

3.1.1 Water Pipe, Fittings, and Connections

3.1.1.1 Utilities

The piping shall be extended to fixtures, outlets, and equipment. The hot-water and cold-water piping system shall be arranged and installed to permit draining. The supply line to each item of equipment or fixture, except faucets, flush valves, or other control valves which are supplied with integral stops, shall be equipped with a shutoff valve to enable isolation of the item for repair and maintenance without interfering with operation of other equipment or fixtures. Supply piping to fixtures, faucets, hydrants, shower heads, and flushing devices shall be anchored to prevent movement.

3.1.1.2 Cutting and Repairing

The work shall be carefully laid out in advance, and unnecessary cutting of construction shall be avoided. Damage to building, piping, wiring, or equipment as a result of cutting shall be repaired by mechanics skilled in the trade involved.

3.1.1.3 Protection of Fixtures, Materials, and Equipment

Pipe openings shall be closed with caps or plugs during installation. Fixtures and equipment shall be tightly covered and protected against dirt, water, chemicals, and mechanical injury. Upon completion of the work, the fixtures, materials, and equipment shall be thoroughly cleaned, adjusted, and operated. Safety guards shall be provided for exposed rotating equipment.

3.1.1.4 Mains, Branches, and Runouts

Piping shall be installed as indicated. Pipe shall be accurately cut and worked into place without springing or forcing. Structural portions of the

building shall not be weakened. Aboveground piping shall run parallel with the lines of the building, unless otherwise indicated. Branch pipes from service lines may be taken from top, bottom, or side of main, using crossover fittings required by structural or installation conditions. Supply pipes, valves, and fittings shall be kept a sufficient distance from other work and other services to permit not less than 1/2 inch between finished covering on the different services. Bare and insulated water lines shall not bear directly against building structural elements so as to transmit sound to the structure or to prevent flexible movement of the lines. Water pipe shall not be buried in or under floors unless specifically indicated or approved. Changes in pipe sizes shall be made with reducing fittings. Use of bushings will not be permitted except for use in situations in which standard factory fabricated components are furnished to accommodate specific accepted installation practice. Change in direction shall be made with fittings.

3.1.1.5 Pipe Drains

Pipe drains indicated shall consist of 3/4 inch hose bibb with renewable seat and gate or ball valve ahead of hose bibb. At other low points, 3/4 inch brass plugs or caps shall be provided. Disconnection of the supply piping at the fixture is an acceptable drain.

3.1.1.6 Expansion and Contraction of Piping

Allowance shall be made throughout for expansion and contraction of water pipe. Each hot-water and hot-water circulation riser shall have expansion loops or other provisions such as offsets, changes in direction, etc., where indicated and/or required. Risers shall be securely anchored as required or where indicated to force expansion to loops. Branch connections from risers shall be made with ample swing or offset to avoid undue strain on fittings or short pipe lengths. Horizontal runs of pipe over 50 feet in length shall be anchored to the wall or the supporting construction about midway on the run to force expansion, evenly divided, toward the ends. Sufficient flexibility shall be provided on branch runouts from mains and risers to provide for expansion and contraction of piping. Flexibility shall be provided by installing one or more turns in the line so that piping will spring enough to allow for expansion without straining. If mechanical grooved pipe coupling systems are provided, the deviation from design requirements for expansion and contraction may be allowed pending approval of Contracting Officer.

3.1.1.7 Thrust Restraint

Plugs, caps, tees, valves and bends deflecting 11.25 degrees or more, either vertically or horizontally, in waterlines 4 inches in diameter or larger shall be provided with thrust blocks, where indicated, to prevent movement. Thrust blocking shall be concrete of a mix not leaner than: 1 cement, 2-1/2 sand, 5 gravel; and having a compressive strength of not less than 2000 psi after 28 days. Blocking shall be placed between solid ground and the fitting to be anchored. Unless otherwise indicated or directed, the base and thrust bearing sides of the thrust block shall be poured against undisturbed earth. The side of the thrust block not subject to thrust shall be poured against forms. The area of bearing will be as shown. Blocking shall be placed so that the joints of the fitting are accessible for repair. Steel rods and clamps, protected by galvanizing or by coating with bituminous paint, shall be used to anchor vertical down bends into gravity thrust blocks.

3.1.1.8 Commercial-Type Water Hammer Arresters

Commercial-type water hammer arresters shall be provided on hot- and cold-water supplies and shall be located as generally indicated, with precise location and sizing to be in accordance with PDI WH 201. Water hammer arresters, where concealed, shall be accessible by means of access doors or removable panels. Commercial-type water hammer arresters shall conform to PDI WH 201. Vertical capped pipe columns will not be permitted.

3.1.2 Joints

Installation of pipe and fittings shall be made in accordance with the manufacturer's recommendations. Mitering of joints for elbows and notching of straight runs of pipe for tees will not be permitted. Joints shall be made up with fittings of compatible material and made for the specific purpose intended.

3.1.2.1 Threaded

Threaded joints shall have American Standard taper pipe threads conforming to ASME B1.20.1. Only male pipe threads shall be coated with graphite or with an approved graphite compound, or with an inert filler and oil, or shall have a polytetrafluoroethylene tape applied.

3.1.2.2 Mechanical Couplings

Grooved mechanical joints shall be prepared according to the coupling manufacturer's instructions. Pipe and groove dimensions shall comply with the tolerances specified by the coupling manufacturer. The diameter of grooves made in the field shall be measured using a "go/no-go" gauge, vernier or dial caliper, or narrow-land micrometer. Groove width and dimension of groove from end of the pipe shall be measured and recorded for each change in grooving tool setup to verify compliance with coupling manufacturer's tolerances. Grooved joints shall not be used in concealed locations.

3.1.2.3 Unions and Flanges

Unions, flanges and mechanical couplings shall not be concealed in walls, ceilings, or partitions. Unions shall be used on pipe sizes 2-1/2 inches and smaller; flanges shall be used on pipe sizes 3 inches and larger.

3.1.2.4 Grooved Mechanical Joints

Grooves shall be prepared according to the coupling manufacturer's instructions. Grooved fittings, couplings, and grooving tools shall be products of the same manufacturer. Pipe and groove dimensions shall comply with the tolerances specified by the coupling manufacturer. The diameter of grooves made in the field shall be measured using a "go/no-go" gauge, vernier or dial caliper, narrow-land micrometer, or other method specifically approved by the coupling manufacturer for the intended application. Groove width and dimension of groove from end of pipe shall be measured and recorded for each change in grooving tool setup to verify compliance with coupling manufacturer's tolerances. Grooved joints shall not be used in concealed locations.

3.1.2.5 Cast Iron Soil, Waste and Vent Pipe

Bell and spigot compression and hubless gasketed clamp joints for soil,

waste and vent piping shall be installed per the manufacturer's recommendations.

3.1.2.6 Copper Tube and Pipe

The tube or fittings shall not be annealed when making connections.

a. Brazed. Brazed joints shall be made in conformance with AWS B2.2, MSS SP-73, and CDA Tube Handbook with flux and are acceptable for all pipe sizes. Copper to copper joints shall include the use of copper-phosphorus or copper-phosphorus-silver brazing metal without flux. Brazing of dissimilar metals (copper to bronze or brass) shall include the use of flux with either a copper-phosphorus, copper-phosphorus-silver or a silver brazing filler metal.

b. Soldered. Soldered joints shall be made with flux and are only acceptable for piping 2 inches and smaller. Soldered joints shall conform to ASME B31.5 and CDA Tube Handbook.

c. Copper Tube Extracted Joint. An extracted mechanical joint may be made in copper tube. Joint shall be produced with an appropriate tool by drilling a pilot hole and drawing out the tube surface to form a collar having a minimum height of three times the thickness of the tube wall. To prevent the branch tube from being inserted beyond the depth of the extracted joint, dimpled depth stops shall be provided. Branch tube shall be notched for proper penetration into fitting to assure a free flow joint. Extracted joints shall be brazed in accordance with NAPHCC Plumbing Code using B-cup series filler metal in accordance with MSS SP-73. Soldered extracted joints will not be permitted.

3.1.2.7 Plastic Pipe

Acrylonitrile-Butadiene-Styrene (ABS) pipe shall have joints made with solvent cement. PVC and CPVC pipe shall have joints made with solvent cement elastomeric, threading, (threading of Schedule 80 Pipe is allowed only where required for disconnection and inspection; threading of Schedule 40 Pipe is not allowed), or mated flanged.

3.1.2.8 Other Joint Methods

3.1.3 Dissimilar Pipe Materials

Connections between ferrous and non-ferrous copper water pipe shall be made with dielectric unions or flange waterways. Dielectric waterways shall have temperature and pressure rating equal to or greater than that specified for the connecting piping. Waterways shall have metal connections on both ends suited to match connecting piping. Dielectric waterways shall be internally lined with an insulator specifically designed to prevent current flow between dissimilar metals. Dielectric flanges shall meet the performance requirements described herein for dielectric waterways. Connecting joints between plastic and metallic pipe shall be made with transition fitting for the specific purpose.

3.1.4 Corrosion Protection for Buried Pipe and Fittings

3.1.4.1 Cast Iron and Ductile Iron

Pressure pipe shall have protective coating, a cathodic protection system, and joint bonding. Pipe, fittings, and joints shall have a protective coating. The protective coating shall be completely encasing polyethylene tube or sheet in accordance with AWWA C105. Joints and fittings shall be cleaned, coated with primer, and wrapped with tape. The pipe shall be cleaned, coated, and wrapped prior to pipe tightness testing. Joints and fittings shall be cleaned, coated, and wrapped after pipe tightness testing. Tape shall conform to AWWA C203 and shall be applied with a 50 percent overlap. Primer shall be as recommended by the tape manufacturer.

3.1.4.2 Steel

Steel pipe, joints, and fittings shall be cleaned, coated with primer, and wrapped with tape. Pipe shall be cleaned, coated, and wrapped prior to pipe tightness testing. Joints and fittings shall be cleaned, coated, and wrapped after pipe tightness testing. Tape shall conform to AWWA C203 and shall be applied with a 50 percent overlap. Primer shall be as recommended by the tape manufacturer.

3.1.5 Pipe Sleeves and Flashing

Pipe sleeves shall be furnished and set in their proper and permanent location.

3.1.5.1 Sleeve Requirements

Pipes 4 inch and smaller passing through concrete or masonry walls or concrete floors or roofs shall be core drilled or provided with pipe sleeves fitted into place and the time of construction. Pipes 6 inches and larger passing through concrete or masonry walls or concrete floors or roofs shall be provided with pipe sleeves fitted into place at the time of construction. Sleeves are not required for supply, drainage, waste and vent pipe passing through concrete slab on grade, except where penetrating a membrane waterproof floor. A modular mechanical type sealing assembly may be installed in lieu of a waterproofing clamping flange and caulking and sealing of annular space between pipe and sleeve. The seals shall consist of interlocking synthetic rubber links shaped to continuously fill the annular space between the pipe and sleeve using galvanized steel bolts, nuts, and pressure plates. The links shall be loosely assembled with bolts to form a continuous rubber belt around the pipe with a pressure plate under each bolt head and each nut. After the seal assembly is properly positioned in the sleeve, tightening of the bolt shall cause the rubber sealing elements to expand and provide a watertight seal between the pipe and the sleeve. Each seal assembly shall be sized as recommended by the manufacturer to fit the pipe and sleeve involved.

Sleeves shall not be installed in structural members, except where indicated or approved. Rectangular and square openings shall be as detailed. Each sleeve shall extend through its respective floor, or roof, and shall be cut flush with each surface, except for special circumstances. Pipe sleeves passing through floors in wet areas such as mechanical equipment rooms, lavatories, kitchens, and other plumbing fixture areas shall extend a minimum of 4 inches above the finished floor. Unless otherwise indicated, sleeves shall be of a size to provide a minimum of 1/4 inch clearance between bare pipe or insulation and inside of sleeve or between insulation and inside of sleeve. Sleeves in bearing walls and concrete slab on grade floors shall be steel pipe or cast-iron pipe. Sleeves in nonbearing walls or ceilings may be steel pipe, cast-iron pipe, galvanized sheet metal with lock-type longitudinal seam, or plastic.

Except as otherwise specified, the annular space between pipe and sleeve, or between jacket over insulation and sleeve, shall be sealed as indicated with sealants conforming to ASTM C 920 and with a primer, backstop material and surface preparation as specified in Section 07900 JOINT SEALING. The annular space between pipe and sleeve, between bare insulation and sleeve or between jacket over insulation and sleeve shall not be sealed for interior walls which are not designated as fire rated. Sleeves through below-grade walls in contact with earth shall be recessed 1/2 inch from wall surfaces on both sides. Annular space between pipe and sleeve shall be filled with backing material and sealants in the joint between the pipe and masonry wall as specified above. Sealant selected for the earth side of the wall shall be compatible with dampproofing/waterproofing materials that are to be applied over the joint sealant. Pipe sleeves in fire-rated walls shall conform to the requirements in Section 07840 FIRESTOPPING.

3.1.5.2 Flashing Requirements

Pipes passing through roof shall be installed through a 16 ounce copper flashing, each within an integral skirt or flange. Flashing shall be suitably formed, and the skirt or flange shall extend not less than 8 inches from the pipe and shall be set over the roof or floor membrane in a solid coating of bituminous cement. The flashing shall extend up the pipe a minimum of 10 inches. For cleanouts, the flashing shall be turned down into the hub and caulked after placing the ferrule. Pipes passing through pitched roofs shall be flashed, using lead or copper flashing, with an adjustable integral flange of adequate size to extend not less than 8 inches from the pipe in all directions and lapped into the roofing to provide a watertight seal. The annular space between the flashing and the bare pipe or between the flashing and the metal-jacket-covered insulation shall be sealed as indicated. Flashing for dry vents shall be turned down into the pipe to form a waterproof joint. Pipes, up to and including 10 inches in diameter, passing through roof or floor waterproofing membrane may be installed through a cast-iron sleeve with caulking recess, anchor lugs, flashing-clamp device, and pressure ring with brass bolts. Flashing shield shall be fitted into the sleeve clamping device. Pipes passing through wall waterproofing membrane shall be sleeved as described above. A waterproofing clamping flange shall be installed.

3.1.5.3 Waterproofing

Waterproofing at floor-mounted water closets shall be accomplished by forming a flashing guard from soft-tempered sheet copper. The center of the sheet shall be perforated and turned down approximately 1-1/2 inches to fit between the outside diameter of the drainpipe and the inside diameter of the cast-iron or steel pipe sleeve. The turned-down portion of the flashing guard shall be embedded in sealant to a depth of approximately 1-1/2 inches; then the sealant shall be finished off flush to floor level between the flashing guard and drainpipe. The flashing guard of sheet copper shall extend not less than 8 inches from the drainpipe and shall be lapped between the floor membrane in a solid coating of bituminous cement. If cast-iron water closet floor flanges are used, the space between the pipe sleeve and drainpipe shall be sealed with sealant and the flashing guard shall be upturned approximately 1-1/2 inches to fit the outside diameter of the drainpipe and the inside diameter of the water closet floor flange. The upturned portion of the sheet fitted into the floor flange shall be sealed.

3.1.5.4 Optional Counterflashing

Instead of turning the flashing down into a dry vent pipe, or caulking and sealing the annular space between the pipe and flashing or metal-jacket-covered insulation and flashing, counterflashing may be accomplished by utilizing the following:

a. A standard roof coupling for threaded pipe up to 6 inches in diameter.

b. A tack-welded or banded-metal rain shield around the pipe.

3.1.5.5 Pipe Penetrations of Slab on Grade Floors

Where pipes, fixture drains, floor drains, cleanouts or similar items penetrate slab on grade floors, except at penetrations of floors with waterproofing membrane as specified in paragraphs Flashing Requirements and Waterproofing, a groove 1/4 to 1/2 inch wide by 1/4 to 3/8 inch deep shall be formed around the pipe, fitting or drain. The groove shall be filled with a sealant as specified in Section 07900 JOINT SEALING.

3.1.6 Fire Seal

Where pipes pass through fire walls, fire-partitions, fire-rated pipe chase walls or floors above grade, a fire seal shall be provided as specified in Section 07840 FIRESTOPPING.

3.1.7 Supports

3.1.7.1 General

Hangers used to support piping 2 inches and larger shall be fabricated to permit adequate adjustment after erection while still supporting the load. Pipe guides and anchors shall be installed to keep pipes in accurate alignment, to direct the expansion movement, and to prevent buckling, swaying, and undue strain. Piping subjected to vertical movement when operating temperatures exceed ambient temperatures shall be supported by variable spring hangers and supports or by constant support hangers. In the support of multiple pipe runs on a common base member, a clip or clamp shall be used where each pipe crosses the base support member. Spacing of the base support members shall not exceed the hanger and support spacing required for an individual pipe in the multiple pipe run. Threaded sections of rods shall not be formed or bent.

3.1.7.2 Pipe Hangers, Inserts, and Supports

Installation of pipe hangers, inserts and supports shall conform to MSS SP-58 and MSS SP-69, except as modified herein.

a. Types 5, 12, and 26 shall not be used.

b. Type 3 shall not be used on insulated pipe.

c. Type 18 inserts shall be secured to concrete forms before concrete is placed. Continuous inserts which allow more adjustment may be used if they otherwise meet the requirements for type 18 inserts.

d. Type 19 and 23 C-clamps shall be torqued per MSS SP-69 and shall have both locknuts and retaining devices furnished by the manufacturer. Field-fabricated C-clamp bodies or retaining devices are not acceptable.

e. Type 20 attachments used on angles and channels shall be furnished with an added malleable-iron heel plate or adapter.

f. Type 24 may be used only on trapeze hanger systems or on fabricated frames.

g. Type 39 saddles shall be used on insulated pipe 4 inches and larger when the temperature of the medium is 60 degrees F or higher. Type 39 saddles shall be welded to the pipe.

h. Type 40 shields shall:

(1) Be used on insulated pipe less than 4 inches.

(2) Be used on insulated pipe 4 inches and larger when the temperature of the medium is 60 degrees F or less.

(3) Have a high density insert for all pipe sizes. High density inserts shall have a density of 8 pcf or greater.

i. Horizontal pipe supports shall be spaced as specified in MSS SP-69 and a support shall be installed not over 1 foot from the pipe fitting joint at each change in direction of the piping. Pipe supports shall be spaced not over 5 feet apart at valves. Operating temperatures in determining hanger spacing for PVC or CPVC pipe shall be 120 degrees F for PVC and 180 degrees F for CPVC. Horizontal pipe runs shall include allowances for expansion and contraction.

j. Vertical pipe shall be supported at each floor, except at slab-on-grade, at intervals of not more than 15 feet nor more than 8 feet from end of risers, and at vent terminations. Vertical pipe risers shall include allowances for expansion and contraction.

k. Type 35 guides using steel, reinforced polytetrafluoroethylene (PTFE) or graphite slides shall be provided to allow longitudinal pipe movement. Slide materials shall be suitable for the system operating temperatures, atmospheric conditions, and bearing loads encountered. Lateral restraints shall be provided as needed. Where steel slides do not require provisions for lateral restraint the following may be used:

(1) On pipe 4 inches and larger when the temperature of the medium is 60 degrees F or higher, a Type 39 saddle, welded to the pipe, may freely rest on a steel plate.

(2) On pipe less than 4 inches a Type 40 shield, attached to the pipe or insulation, may freely rest on a steel plate.

(3) On pipe 4 inches and larger carrying medium less that 60 degrees F a Type 40 shield, attached to the pipe or insulation, may freely rest on a steel plate.

l. Pipe hangers on horizontal insulated pipe shall be the size of the outside diameter of the insulation. The insulation shall be continuous through the hanger on all pipe sizes and applications.

m. Where there are high system temperatures and welding to piping is not desirable, the type 35 guide shall include a pipe cradle, welded to the guide structure and strapped securely to the pipe. The pipe shall be separated from the slide material by at least 4 inches or by an amount adequate for the insulation, whichever is greater.

n. Hangers and supports for plastic pipe shall not compress, distort, cut or abrade the piping, and shall allow free movement of pipe except where otherwise required in the control of expansion/contraction.

3.1.8 Welded Installation

Plumbing pipe weldments shall be as indicated. Changes in direction of piping shall be made with welding fittings only; mitering or notching pipe to form elbows and tees or other similar type construction will not be permitted. Branch connection may be made with either welding tees or forged branch outlet fittings. Branch outlet fittings shall be forged, flared for improvement of flow where attached to the run, and reinforced against external strains. Beveling, alignment, heat treatment, and inspection of weld shall conform to ASME B31.1. Weld defects shall be removed and repairs made to the weld, or the weld joints shall be entirely removed and rewelded. After filler metal has been removed from its original package, it shall be protected or stored so that its characteristics or welding properties are not affected. Electrodes that have been wetted or that have lost any of their coating shall not be used.

3.1.9 Pipe Cleanouts

Pipe cleanouts shall be the same size as the pipe except that cleanout plugs larger than 4 inches will not be required. A cleanout installed in connection with cast-iron soil pipe shall consist of a long-sweep 1/4 bend or one or two 1/8 bends extended to the place shown. An extra-heavy cast-brass or cast-iron ferrule with countersunk cast-brass head screw plug shall be caulked into the hub of the fitting and shall be flush with the floor. Cleanouts in connection with other pipe, where indicated, shall be T-pattern, 90-degree branch drainage fittings with cast-brass screw plugs, except plastic plugs shall be installed in plastic pipe. Plugs shall be the same size as the pipe up to and including 4 inches. Cleanout tee branches with screw plug shall be installed at the foot of soil and waste stacks, at the foot of interior downspouts, on each connection to building storm drain where interior downspouts are indicated, and on each building drain outside the building. Cleanout tee branches may be omitted on stacks in single story buildings with slab-on-grade construction or where less than 18 inches of crawl space is provided under the floor. Cleanouts on pipe concealed in partitions shall be provided with chromium plated bronze, nickel bronze, nickel brass or stainless steel flush type access cover plates. Round access covers shall be provided and secured to plugs with securing screw. Square access covers may be provided with matching frames, anchoring lugs and cover screws. Cleanouts in finished walls shall have access covers and frames installed flush with the finished wall. Cleanouts installed in finished floors subject to foot traffic shall be provided with a chrome-plated cast brass, nickel brass, or nickel bronze cover secured to the plug or cover frame and set flush with the finished floor. Heads of fastening screws shall not project above the cover surface. Where cleanouts are provided with adjustable heads, the heads shall be cast iron.

3.2 WATER HEATERS AND HOT WATER STORAGE TANKS

3.2.1 Relief Valves

No valves shall be installed between a relief valve and its water heater or storage tank. The P&T relief valve shall be installed where the valve actuator comes in contact with the hottest water in the heater. Whenever possible, the relief valve shall be installed directly in a tapping in the tank or heater; otherwise, the P&T valve shall be installed in the hot-water outlet piping. A vacuum relief valve shall be provided on the cold water supply line to the hot-water storage tank or water heater and mounted above and within 6 inches above the top of the tank or water heater.

3.2.2 Installation of Gas- Fired Water Heater

Installation shall conform to NFPA 54. Storage water heaters that are not equipped with integral heat traps and having vertical pipe risers shall be installed with heat traps directly on both the inlet and outlet. Circulating systems need not have heat traps installed. An acceptable heat trap may be a piping arrangement such as elbows connected so that the inlet and outlet piping make vertically upward runs of not less than 24 inches just before turning downward or directly horizontal into the water heater's inlet and outlet fittings. Commercially available heat traps, specifically designed by the manufacturer for the purpose of effectively restricting the natural tendency of hot water to rise through vertical inlet and outlet piping during standby periods may also be approved.

3.2.3 Vent Piping

Water heater vent and air intake piping shall be installed in compliance with the manufacturer's recommendations. Vent piping and air intake piping for the water heater shall be 3 inch diameter Schedule 40 PVC piping and shall be sloped at 1/4 inch per foot and shall be supported at 42 inch intervals. Each pipe shall be routed through the building roof and shall terminate with a 45 degree elbow vent cap with screen. A minimum distance of 7 inches and maximum distance of 24 inches must separate the two pipe outlets. Roof penetration must be completed using self-sealing roof flashing and shall be sealed weather-tight. The first 5 feet of the vent system shall be 3 inch ABS Schedule 40 piping.

3.2.4 Connections to Water Heaters

Connections of metallic pipe to water heaters shall be made with dielectric unions or flanges.

3.2.5 Expansion Tank

A pre-charged expansion tank shall be installed on the cold water supply between the water heater inlet and the cold water supply shut-off valve. The Contractor shall adjust the expansion tank air pressure, as recommended by the tank manufacturer, to match incoming water pressure.

3.3 FIXTURES AND FIXTURE TRIMMINGS

Polished chromium-plated pipe, valves, and fittings shall be provided where exposed to view. Angle stops, straight stops, stops integral with the faucets, or concealed type of lock-shield, and loose-key pattern stops for supplies with threaded, sweat or solvent weld inlets shall be furnished and installed with fixtures. Where connections between copper tubing and

faucets are made by rubber compression fittings, a beading tool shall be used to mechanically deform the tubing above the compression fitting. Exposed traps and supply pipes for fixtures and equipment shall be connected to the rough piping systems at the wall, unless otherwise specified under the item. Floor and wall escutcheons shall be as specified. Drain lines and hot water lines of fixtures for handicapped personnel shall be insulated and do not require polished chrome finish. Plumbing fixtures and accessories shall be installed within the space shown.

3.3.1 Fixture Connections

Where space limitations prohibit standard fittings in conjunction with the cast-iron floor flange, special short-radius fittings shall be provided. Connections between earthenware fixtures and flanges on soil pipe shall be made gastight and watertight with a closet-setting compound or neoprene gasket and seal. Use of natural rubber gaskets or putty will not be permitted. Fixtures with outlet flanges shall be set the proper distance from floor or wall to make a first-class joint with the closet-setting compound or gasket and fixture used.

3.3.2 Flushometer Valves

Flushometer valves shall be secured to prevent movement by anchoring the long finished top spud connecting tube to wall adjacent to valve with approved metal bracket. Flushometer valves for water closets shall be installed 39 inches above the floor, except at water closets intended for use by the physically handicapped where flushometer valves shall be mounted at approximately 30 inches above the floor and arranged to avoid interference with grab bars. In addition, for water closets intended for handicap use, the flush valve handle shall be installed on the wide side of the enclosure.

3.3.3 Height of Fixture Rims Above Floor

Lavatories shall be mounted with rim 31 inches above finished floor. Wall-hung drinking fountains and water coolers shall be installed with rim 42 inches above floor. Installation of fixtures for use by the physically handicapped shall be in accordance with CABO A117.1.

3.3.4 Fixture Supports

Fixture supports for off-the-floor lavatories, urinals, water closets, and other fixtures of similar size, design, and use, shall be of the chair-carrier type. The carrier shall provide the necessary means of mounting the fixture, with a foot or feet to anchor the assembly to the floor slab. Adjustability shall be provided to locate the fixture at the desired height and in proper relation to the wall. Support plates, in lieu of chair carrier, shall be fastened to the wall structure only where it is not possible to anchor a floor-mounted chair carrier to the floor slab.

3.3.4.1 Support for Solid Masonry Construction

Chair carrier shall be anchored to the floor slab. Where a floor-anchored chair carrier cannot be used, a suitable wall plate shall be imbedded in the masonry wall.

3.3.4.2 Support for Concrete-Masonry Wall Construction

Chair carrier shall be anchored to floor slab. Where a floor-anchored

chair carrier cannot be used, a suitable wall plate shall be fastened to the concrete wall using through bolts and a back-up plate.

3.3.4.3 Support for Steel Stud Frame Partitions

Chair carrier shall be used. The anchor feet and tubular uprights shall be of the heavy duty design; and feet (bases) shall be steel and welded to a square or rectangular steel tube upright. Wall plates, in lieu of floor-anchored chair carriers, shall be used only if adjoining steel partition studs are suitably reinforced to support a wall plate bolted to these studs.

3.3.5 Backflow Prevention Devices

Plumbing fixtures, equipment, and pipe connections shall not cross connect or interconnect between a potable water supply and any source of nonpotable water. Backflow preventers shall be installed where indicated and in accordance with ICC Plumbing Code at all other locations necessary to preclude a cross-connect or interconnect between a potable water supply and any nonpotable substance. In addition backflow preventers shall be installed at all locations where the potable water outlet is below the flood level of the equipment, or where the potable water outlet will be located below the level of the nonpotable substance. Backflow preventers shall be located so that no part of the device will be submerged. Backflow preventers shall be of sufficient size to allow unrestricted flow of water to the equipment, and preclude the backflow of any nonpotable substance into the potable water system. Bypass piping shall not be provided around backflow preventers. Access shall be provided for maintenance and testing. Each device shall be a standard commercial unit.

3.3.6 Access Panels

Access panels shall be provided for concealed valves and controls, or any item requiring inspection or maintenance. Access panels shall be of sufficient size and located so that the concealed items may be serviced, maintained, or replaced. Access panels shall be as specified in Section 05500 MISCELLANEOUS METAL.

3.3.7 Sight Drains

Sight drains shall be installed so that the indirect waste will terminate 2 inches above the flood rim of the funnel to provide an acceptable air gap.

3.3.8 Traps

Each trap shall be placed as near the fixture as possible, and no fixture shall be double-trapped. Traps installed on cast-iron soil pipe shall be cast iron. Traps installed on steel pipe or copper tubing shall be recess-drainage pattern, or brass-tube type. Traps installed on plastic pipe may be plastic conforming to ASTM D 3311. Traps for acid-resisting waste shall be of the same material as the pipe.

3.4 VIBRATION-ABSORBING FEATURES

Mechanical equipment, including compressors and pumps, shall be isolated from the building structure by approved vibration-absorbing features, unless otherwise shown. Each foundation shall include an adequate number of standard isolation units. Each unit shall consist of machine and floor or foundation fastening, together with intermediate isolation material, and

shall be a standard product with printed load rating. Piping connected to mechanical equipment shall be provided with flexible connectors.

3.5 IDENTIFICATION SYSTEMS

3.5.1 Identification Tags

Identification tags made of brass, engraved laminated plastic, or engraved anodized aluminum, indicating service and valve number shall be installed on valves, except those valves installed on supplies at plumbing fixtures. Tags shall be 1-3/8 inch minimum diameter, and marking shall be stamped or engraved. Indentations shall be black, for reading clarity. Tags shall be attached to valves with No. 12 AWG, copper wire, chrome-plated beaded chain, or plastic straps designed for that purpose.

3.5.2 Pipe Color Code Marking

Color code marking of piping shall be as specified in Section 09900 PAINTING, GENERAL.

3.6 ESCUTCHEONS

Escutcheons shall be provided at finished surfaces where bare or insulated piping, exposed to view, passes through floors, walls, or ceilings, except in boiler, utility, or equipment rooms. Escutcheons shall be fastened securely to pipe or pipe covering and shall be satin-finish, corrosion-resisting steel, polished chromium-plated zinc alloy, or polished chromium-plated copper alloy. Escutcheons shall be either one-piece or split-pattern, held in place by internal spring tension or setscrew.

3.7 PAINTING

Painting of pipes, hangers, supports, and other iron work, either in concealed spaces or exposed spaces, is specified in Section 09900 PAINTING, GENERAL.

3.8 TESTS, FLUSHING AND DISINFECTION

3.8.1 Plumbing System

The following tests shall be performed on the plumbing system in accordance with ICC Plumbing Code.

a. Drainage and Vent Systems Tests.

b. Building Sewers Tests.

c. Water Supply Systems Tests.

3.8.1.1 Backflow Prevention Assembly Tests

Backflow prevention assembly shall be tested using gauges specifically designed for the testing of backflow prevention assemblies. Gauges shall be tested annually for accuracy in accordance with the University of Southern California's Foundation of Cross Connection Control and Hydraulic Research or the American Water Works Association Manual of Cross Connection (Manual M-14). Report form for each assembly shall include, as a minimum, the following:

Data on Device	Data on Testing Firm
Type of Assembly	Name
Manufacturer	Address
Model Number	Certified Tester
Serial Number	Certified Tester No.
Size	Date of Test
Location	
Test Pressure Readings	Serial Number and Test Data of Gauges

If the unit fails to meet specified requirements, the unit shall be repaired and retested.

3.8.2 Defective Work

If inspection or test shows defects, such defective work or material shall be replaced or repaired as necessary and inspection and tests shall be repeated. Repairs to piping shall be made with new materials. Caulking of screwed joints or holes will not be acceptable.

3.8.3 System Flushing

3.8.3.1 During Flushing

Before operational tests or disinfection, potable water piping system shall be flushed with potable water. Sufficient water shall be used to produce a water velocity that is capable of entraining and removing debris in all portions of the piping system. This requires simultaneous operation of all fixtures on a common branch or main in order to produce a flushing velocity of approximately 4 fps through all portions of the piping system. In the event that this is impossible due to size of system, the Contracting Officer (or the designated representative) shall specify the number of fixtures to be operated during flushing. Contractor shall provide adequate personnel to monitor the flushing operation and to ensure that drain lines are unobstructed in order to prevent flooding of the facility. Contractor shall be responsible for any flood damage resulting from flushing of the system. Flushing shall be continued until entrained dirt and other foreign materials have been removed and until discharge water shows no discoloration.

3.8.3.2 After Flushing

System shall be drained at low points. Strainer screens shall be removed, cleaned, and replaced. After flushing and cleaning, systems shall be prepared for testing by immediately filling water piping with clean, fresh potable water. Any stoppage, discoloration, or other damage to the finish, furnishings, or parts of the building due to the Contractor's failure to properly clean the piping system shall be repaired by the Contractor. When the system flushing is complete, the hot-water system shall be adjusted for uniform circulation. Flushing devices and automatic control systems shall be adjusted for proper operation. All faucets and drinking water fountains, to include any device considered as an end point device by NSF 61, Section 9, shall be flushed a minimum of 0.25 gallons per 24 hour period, ten times over a 14 day period.

3.8.4 Operational Test

Upon completion of flushing and prior to disinfection procedures, the Contractor shall subject the plumbing system to operating tests to

demonstrate satisfactory functional and operational efficiency. Such operating tests shall cover a period of not less than 8 hours for each system and shall include the following information in a report with conclusion as to the adequacy of the system:

a. Time, date, and duration of test.

b. Water pressures at the most remote and the highest fixtures.

c. Operation of each fixture and fixture trim.

d. Operation of each valve, hydrant, and faucet.

e. Pump suction and discharge pressures.

f. Temperature of each domestic hot-water supply.

g. Operation of each floor and roof drain by flooding with water.

h. Operation of each vacuum breaker and backflow preventer.

Each indicating instrument shall be read at 1/2 hour intervals. The report of the test shall be submitted in quadruplicate. The Contractor shall furnish instruments, equipment, and personnel required for the tests; the Government will furnish the necessary water and electricity.

3.8.5 Disinfection

After operational tests are complete, the entire domestic hot- and cold-water distribution system shall be disinfected. System shall be flushed as specified, before introducing chlorinating material. The chlorinating material shall be hypochlorites or liquid chlorine. Water chlorination procedure shall be in accordance with AWWA M20. The chlorinating material shall be fed into the water piping system at a constant rate at a concentration of at least 50 parts per million (ppm). A properly adjusted hypochlorite solution injected into the main with a hypochlorinator, or liquid chlorine injected into the main through a solution-feed chlorinator and booster pump, shall be used. The chlorine residual shall be checked at intervals to ensure that the proper level is maintained. Chlorine application shall continue until the entire main is filled. The water shall remain in the system for a minimum of 24 hours. Each valve in the system being disinfected shall be opened and closed several times during the contact period to ensure its proper disinfection. Following the 24-hour period, no less than 25 ppm chlorine residual shall remain in the system. Water tanks shall be disinfected by the addition of chlorine directly to the filling water. Following a 6 hour period, no less than 50 ppm chlorine residual shall remain in the tank. If after the 24 hour and 6 hour holding periods, the residual solution contains less than 25 ppm and 50 ppm chlorine respectively, flush the piping and tank with potable water, and repeat the above procedures until the required residual chlorine levels are satisfied. The system including the tanks shall then be flushed with clean water until the residual chlorine level is reduced to less than one part per million. During the flushing period each valve and faucet shall be opened and closed several times. Samples of water in disinfected containers shall be obtained from several locations selected by the Contracting Officer. The samples of water shall be tested for total coliform organisms (coliform bacteria, fecal coliform, streptococcal, and other bacteria) in accordance with AWWA EWW. The testing method used shall be either the multiple-tube fermentation technique or the membrane-filter

technique. Disinfection shall be repeated until tests indicate the absence of coliform organisms (zero mean coliform density per 100 milliliters) in the samples for at least 2 full days. The system will not be accepted until satisfactory bacteriological results have been obtained.

3.8.6 Flushing of Potable Water System

As an option to the system flushing specified above, the potable water system system shall be flushed and conditioned until the residual level of lead is less than that specified by the base industrial hygienist. The water supply to the building shall be tested separately to ensure that any lead contamination found during potable water system testing is due to work being performed inside the building.

3.9 PLUMBING FIXTURE SCHEDULE

WC-1 WATER CLOSET (FLOOR MOUNTED):

Siphon-jet, elongated bowl, top supply spud, ASME A112.19.2M, floor mounted. Floor flange shall be copper alloy, cast iron, or plastic.

Gasket shall be wax type.

Seat - IAPMO Z124.5, Type A, white plastic, elongated, open front.

Flushometer Valve - Automatic solenoid operator, 24-volt, with override button, and transformer, ASSE 1037, large diaphragm type with non-hold-open feature, backcheck angle control stop, and vacuum breaker. Minimum upper chamber inside diameter of not less than 2-5/8 inches at the point where the diaphragm is sealed between the upper and lower chambers. The maximum water use shall be 1.6 gallons per flush.

WC-2 WATER CLOSET (HANDICAPPED):

Siphon-jet, elongated bowl, top supply spud, ASME A112.19.2M, floor mounted. Floor flange shall be copper alloy, cast iron, or plastic. Height of top rim of bowl shall be 18 inches above finish floor in accordance with CABO A117.1.

Gasket shall be wax type.

Seat - IAPMO Z124.5, Type A, white plastic, elongated, open front.

Flushometer Valve - Automatic solenoid operator, 24-volt, with override button, and transformer, ASSE 1037, large diaphragm type with non-hold-open feature, backcheck angle control stop, and vacuum breaker. Minimum upper chamber inside diameter of not less than 2-5/8 inches at the point where the diaphragm is sealed between the upper and lower chambers. The maximum water use shall be 1.6 gallons per flush.

U-1 URINAL (HANDICAPPED):

Wall hanging, with integral trap and extended shields, ASME A112.19.2M siphon jet above floor. Top supply connection, back outlet. Rim height shall be 17 inches above finish floor in accordance with CABO A117.1.

Flushometer Valve - Similar to Flushometer Valve for WC-1. Automatic solenoid operator with override button, and transformer. The maximum water use shall be 1 gallon per flush.

LAV-1 WHEELCHAIR LAVATORY:

White Vitreous china, ASME A112.19.2M, wall-hung, wheelchair lavatory with wrist or elbow controls 20 inches wide x 27 inches deep with gooseneck spout. Flow shall be limited to 0.25 gallon per cycle at a flowing water pressure of 80 psi if a metering device or fitting is used that limits the period of water discharge such as foot switch or fixture occupancy sensor. If a metering device is not used, the flow shall be limited to 2.5 gpm at a flowing water pressure of 80 psi.

Drain - Strainer shall be copper alloy or stainless steel.

LAV-2 LAVATORY (ACCESSIBLE):

Manufacturer's standard sink depth, rimless for under counter mounting white vitreous china ASME A112.19.2M countertop, oval, with mounting kit.

Faucet - Faucets shall meet the requirements of NSF 61, Section 9. Faucets shall be center set type with 24-volt electronic operator, sensor and transformer. Faucets shall have replaceable seats and washers. Faucets shall have metal replaceable cartridge control unit or metal cartridge units with diaphragm which can be replaced without special tools. Valves shall be copper alloy. Connection between valve and spout for center-set faucet shall be of rigid metal tubing. Flow shall be limited to 0.25 gallon per cycle at a flowing water pressure of 80 psi if a metering device or fitting is used that limits the period of water discharge such as a foot switch or fixture occupancy sensor. If a metering device is not used, the flow shall be limited to 2.5 gpm at a flowing pressure of 80 psi.

Drain - Strainer shall be copper alloy or stainless steel. See paragraph FIXTURES for optional plastic accessories.

MB-1 MOP BASIN

Mop sinks shall be constructed of a prefabricated terrazzo base with tile curb, floor mounted, 24 inches square by 10 inches deep with 6 inches deep threshold. Hose faucet (bibbs) with vacuum breaker backflow preventer shall be brass with 3/4-inch male inlet threads, hexagon shoulder, and 3/4-inch hose connection. Faucets shall have four-arm or lever type operating handle, and spout with bucket hook.

Drain assembly - plug, cup strainer, crossbars, jam nuts, washers, couplings, stopper, etc., shall be copper alloy or stainless steel. Mop sink shall be supplied with 3-inch drain located in the center of terrazzo base.

EWC-1 WATER COOLER DRINKING FOUNTAINS:

Drinking fountains shall meet the requirements of NSF 61, Section 9. Water cooler drinking fountains shall: be self contained, conform to ARI 1010, use one of the fluorocarbon gases conforming to ARI 700 and ASHRAE 34 which has an Ozone Depletion Potential of less than or equal to 0.05, have a capacity to deliver 8 gph of water at 50 degrees F with an inlet water temperature of 80 degrees F while residing in a room environment of 90 degrees F, and have self-closing valves. Self-closing valves shall have automatic stream regulators, have a flow control capability, have a push button actuation or have a cross-shaped index metal turn handle without a

hood. Exposed surfaces of stainless steel shall have No. 4 general polish finish. Spouts shall provide a flow of water at least 4 inches high so as to allow the insertion of a cup or glass under the flow of water.

Two-level surface wall-mounted unit shall be two-level design to meet the height requirements of handicapped and able-bodied people. Units shall be surface wall-mounted. The dimensions unit shall be dual unit, each unit 15 inches wide, 20 inches deep, with a back height of 6 to 8 inches. The unit shall clear the floor or ground by at least 8 inches. A clear knee space shall exist between the bottom of the bowl and the floor or ground of at least 27 inches and between the front edge of the bowl and the body of the unit of at least 8 inches. A 8 inch wide clear space shall exist on both sides of the unit. The spout height for the handicapped unit shall be no more than 36 inches above the floor or ground to the outlet. The spout shall be at the front of the unit and direct the water flow in a trajectory that is parallel or nearly parallel to the front of the unit. The bowl shall be 6-1/2 inches high, made of stainless steel and be for interior installation.

GARBAGE DISPOSAL MACHINES:

Garbage disposals machines shall be as specified in Section 11400.

3.10 POSTED INSTRUCTIONS

Framed instructions under glass or in laminated plastic, including wiring and control diagrams showing the complete layout of the entire system, shall be posted where directed. Condensed operating instructions explaining preventive maintenance procedures, methods of checking the system for normal safe operation, and procedures for safely starting and stopping the system shall be prepared in typed form, framed as specified above for the wiring and control diagrams and posted beside the diagrams. The framed instructions shall be posted before acceptance testing of the systems.

3.11 PERFORMANCE OF WATER HEATING EQUIPMENT

Standard rating condition terms are as follows:

EF = Energy factor, overall efficiency.

ET = Thermal efficiency with 70 degrees F delta T.

EC = Combustion efficiency, 100 percent - flue loss when smoke = o (trace is permitted).

SL = Standby loss in W/sq. ft. based on 80 degrees F delta T, or in percent per hour based on nominal 90 degrees F delta T.

HL = Heat loss of tank surface area.

V = Storage volume in liters

3.11.1 Storage Water Heaters

3.11.1.1 Gas

a. Storage capacity of 100 gallons or less, and input rating of 75,000 Btu/h or less: minimum EF shall be 0.62-0.0019V per 10 CFR

430.

b. Storage capacity of more than 100 gallons - or input rating more than 75,000 Btu/h: It shall be 77 percent; maximum SL shall be 1.3+38/V, per ANSI Z21.10.3.

3.12 OPERATION AND MAINTENANCE DATA

Provide operation and maintenance for equipment as specified.

3.13 TABLES

TABLE I
PIPE AND FITTING MATERIALS FOR
DRAINAGE, WASTE, AND VENT PIPING SYSTEMS

		SERVICE				
Item #	Pipe and Fitting Materials	A	B	C	D	E
1	Cast iron soil pipe and fittings, hub and spigot, ASTM A 74 with compression gaskets	X	X	X	X	
2	Cast iron soil pipe and fittings hubless, CISPI 301 and ASTM A 888		X	X	X	
3	Copper drainage tube, (DWV), ASTM B 306	X*	X	X*	X	X
4	Wrought copper and wrought alloy solder-joint drainage fittings. ASME B16.29	X	X	X	X	X
5	Cast copper alloy solder joint drainage fittings, DWV, ASME B16.23	X	X	X	X	X
6	Acrylonitrile-Butadiene-Styrene (ABS) plastic drain, waste, and vent pipe and fittings ASTM D 2661, ASTM F 628	X		X		
7	Polyvinyl Chloride plastic drain, waste and vent pipe and fittings, ASTM D 2665, ASTM F 891, (Sch 40) ASTM F 1760	X		X		

SERVICE:

A - Underground Building Soil, Waste and Storm Drain
B - Aboveground Soil, Waste, Drain and Roof Drain Piping In Buildings
C - Underground Vent
D - Aboveground Vent

TABLE I
PIPE AND FITTING MATERIALS FOR
DRAINAGE, WASTE, AND VENT PIPING SYSTEMS

		SERVICE				
Item #	Pipe and Fitting Materials	A	B	C	D	E

E - Equipment Condensate Drains
* - Hard Temper

TABLE II
PIPE AND FITTING MATERIALS FOR PRESSURE PIPING SYSTEMS

		SERVICE		
Item No.	Pipe and Fitting Materials	A	B	C
1	Malleable-iron threaded fittings, a. Galvanized, ASME B16.3 for use with Item 4a			
	b. Same as "a" but not galvanized for use with Item 4b			
2	Grooved pipe couplings, ferrous pipe ASTM A 536 and non-ferrous pipe, ASTM A 536			
3	Ductile iron grooved joint fittings for ferrous pipe ASTM A 536 and ASTM A 47/A 47M, for use with Item 2			
4	Steel pipe: a. Seamless, galvanized, ASTM A 53/A 53M, Type S, Grade B			
	b. Seamless, black, ASTM A 53/A 53M, Type S, Grade B			X
5	Seamless red brass pipe, ASTM B 43	X	X	X
6	Bronze flanged fittings, ASME B16.24 for use with Items 5 and 7	X	X	X
7	Seamless copper pipe, ASTM B 42	X	X	X
8	Seamless copper water tube, ASTM B 88, ASTM B 88M	X**	X**	X***
9	Cast bronze threaded fittings, ASME B16.15 for use with Items 5 and 7	X	X	X
10	Wrought copper and bronze solder-joint pressure fittings, ASME B16.22 for use with Items 5 and 7	X	X	X
11	Cast copper alloy solder-joint pressure fittings, ASME B16.18	X	X	X

TABLE II
PIPE AND FITTING MATERIALS FOR PRESSURE PIPING SYSTEMS

		SERVICE		
Item No.	Pipe and Fitting Materials	A	B	C
	for use with Items 8 and 9			
12	Bronze and sand castings grooved joint pressure fittings for non-ferrous pipe ASTM B 584, for use with Item 2	X		
13	Steel pipeline flanges, MSS SP-44			
14	Fittings: brass or bronze; ASME B16.15, and ASME B16.18 ASTM B 828	X		
15	Carbon steel pipe unions, socket-welding and threaded, MSS SP-83			
16	Malleable-iron threaded pipe unions ASME B16.39			

A - Cold Water Aboveground
B - Hot Water 180 degrees F Maximum Aboveground
C - Cold Water Service Belowground
Indicated types are minimum wall thicknesses.
** - Type L - Hard
*** - Type K - Hard temper with brazed joints only or type K-soft temper without joints in or under floors
**** - In or under slab floors only brazed joints

-- End of Section --

SECTION 15700

UNITARY HEATING AND COOLING EQUIPMENT
01/01

PART 1 GENERAL

1.1 REFERENCES

The publications listed below form a part of this specification to the extent referenced. The publications are referred to in the text by basic designation only.

AIR CONDITIONING AND REFRIGERATION INSTITUTE (ARI)

ARI 210/240	(1994) Unitary Air-Conditioning and Air-Source Heat Pump Equipment
ARI 340/360	(1993) Commercial and Industrial Unitary Air-Conditioning and Heat Pump Equipment
ARI 370	(1986) Sound Rating of Large Outdoor Refrigerating and Air-Conditioning Equipment
ARI 460	(2000) Remote Mechanical-Draft Air-Cooled Refrigerant Condensers
ARI 500	(1990) Variable Capacity Positive Displacement Refrigerant Compressors and Compressor Units for Air-Conditioning and Heat Pump Applications
ARI 700	(1999) Specifications for Fluorocarbons and Other Refrigerants

AMERICAN SOCIETY FOR TESTING AND MATERIALS (ASTM)

ASTM A 307	(1997) Carbon Steel Bolts and Studs, 60 000 PSI Tensile Strength
ASTM B 117	(1997) Operating Salt Spray (Fog) Apparatus
ASTM D 520	(1984; R 1995el) Zinc Dust Pigment
ASTM E 84	(1999) Surface Burning Characteristics of Building Materials
ASTM E 437	(1992; R 1997) Industrial Wire Cloth and Screens (Square Opening Series)
ASTM F 104	(1995) Nonmetallic Gasket Materials

AMERICAN SOCIETY OF HEATING, REFRIGERATING AND AIR-CONDITIONING ENGINEERS (ASHRAE)

ASHRAE 15	(1994) Safety Code for Mechanical

	Refrigeration
ASHRAE 34	(1997) Number Designation and Safety Classification of Refrigerants
ASHRAE 52.1	(1992) Gravimetric and Dust-Spot Procedures for Testing Air-Cleaning Devices Used in General Ventilation for Removing Particulate Matter
ASHRAE 127	(1988) Method of Testing for Rating Computer and Data Processing Room Unitary Air-Conditioners

AMERICAN WELDING SOCIETY (AWS)

AWS Z49.1	(1999) Safety in Welding and Cutting

ASME INTERNATIONAL (ASME)

ASME BPV VIII Div 1	(1998) Boiler and Pressure Vessel Code; Section VIII, Pressure Vessels Division 1 - Basic Coverage
ASME BPV IX	(1998) Boiler and Pressure Vessel Code; Section IX, Welding and Brazing Qualifications

NATIONAL ELECTRICAL MANUFACTURERS ASSOCIATION (NEMA)

NEMA ICS 6	(1993) Industrial Control and Systems, Enclosures
NEMA MG 1	(1998) Motors and Generators
NEMA MG 2	(1989) Safety Standard for Construction and Guide for Selection, Installation, and Use of Electric Motors and Generators

NATIONAL FIRE PROTECTION ASSOCIATION (NFPA)

NFPA 70	(1999) National Electrical Code

UNDERWRITERS LABORATORIES (UL)

UL 207	(1993; Rev thru Oct 1997) Refrigerant-Containing Components and Accessories, Nonelectrical
UL 586	(1996; Rev thru Aug 99) High-Efficiency, Particulate, Air Filter Units
UL 900	(1994; Rev thru Nov 1999) Test Performance of Air Filter Units
UL 1995	(1995; Rev thru Aug 1999) Heating and Cooling Equipment

1.2 SUBMITTALS

Government approval is required for submittals with a "G" designation; submittals not having a "G" designation are for information only. When used, a designation following the "G" designation identifies the office that will review the submittal for the Government. The following shall be submitted in accordance with Section 01330 SUBMITTAL PROCEDURES:

SD-02 Shop Drawings

Drawings; G

Drawings provided in adequate detail to demonstrate compliance with contract requirements. Drawings shall consist of:

a. Equipment layouts which identify assembly and installation details.

b. Plans and elevations which identify clearances required for maintenance and operation.

c. Wiring diagrams which identify each component individually and interconnected or interlocked relationships between components.

d. Foundation drawings, bolt-setting information, and foundation bolts prior to concrete foundation construction for equipment indicated or required to have concrete foundations.

e. Details, if piping and equipment are to be supported other than as indicated, which include loadings and type of frames, brackets, stanchions, or other supports.

f. Automatic temperature control diagrams and control sequences.

g. Installation details which includes the amount of factory set superheat and corresponding refrigerant pressure/temperature.

SD-03 Product Data

Unitary Equipment; G

Manufacturer's standard catalog data, at least 5 weeks prior to the purchase or installation of a particular component, highlighted to show material, size, options, performance charts and curves, etc. in adequate detail to demonstrate compliance with contract requirements. Data shall include manufacturer's recommended installation instructions and procedures. If vibration isolation is specified for a unit, vibration isolator literature shall be included containing catalog cuts and certification that the isolation characteristics of the isolators provided meet the manufacturer's recommendations. Data shall be submitted for each specified component.

Spare Parts Data; G

Spare parts data for each different item of equipment specified, after approval of detail drawings and not later than 1 month prior to the date of beneficial occupancy. The data shall include a complete list of parts and supplies, with current unit prices and source of supply, a recommended spare parts list for 1 year of

operation, and a list of the parts recommended by the manufacturer to be replaced on a routine basis.

Verification of Dimensions

A letter, at least 2 weeks prior to beginning construction, including the date the site was visited, conformation of existing conditions, and any discrepancies found.

System Performance Tests; G

A schedule, at least 2 weeks prior to the start of related testing, for the system performance tests. The schedules shall identify the proposed date, time, and location for each test.

Demonstrations; G

A schedule, at least 2 weeks prior to the date of the proposed training course, which identifies the date, time, and location for the training.

SD-06 Test Reports

Refrigerant Tests, Charging, and Start-Up; G

Six copies of each test containing the information described below in bound 8-1/2 x 11 inch booklets. Individual reports shall be submitted for the refrigerant system tests.

a. The date the tests were performed.

b. A list of equipment used, with calibration certifications.

c. Initial test summaries.

d. Repairs/adjustments performed.

e. Final test results.

System Performance Tests; G

Six copies of the report provided in bound 8-1/2 x 11 inch booklets. The report shall document compliance with the specified performance criteria upon completion and testing of the system. The report shall indicate the number of days covered by the tests and any conclusions as to the adequacy of the system. The report shall also include the following information and shall be taken at least three different times at outside dry-bulb temperatures that are at least 5 degrees F apart:

a. Date and outside weather conditions.

b. The load on the system based on the following:

(1) The refrigerant used in the system.
(2) Condensing temperature and pressure.
(3) Suction temperature and pressure.
(4) Ambient, condensing and coolant temperatures.
(5) Running current, voltage and proper phase sequence for each

phase of all motors.

c. The actual on-site setting of operating and safety controls.

d. Thermostatic expansion valve superheat - value as determined by field test.

e. Subcooling.

f. High and low refrigerant temperature switch set-points

g. Low oil pressure switch set-point.

h. Defrost system timer and thermostat set-points.

i. Moisture content.

j. Capacity control set-points.

k. Field data and adjustments which affect unit performance and energy consumption.

l. Field adjustments and settings which were not permanently marked as an integral part of a device.

SD-07 Certificates

Unitary Equipment; G

Where the system, components, or equipment are specified to comply with requirements of ARI, ASHRAE, ASME, or UL, proof of such compliance shall be provided. The label or listing of the specified agency shall be acceptable evidence. In lieu of the label or listing, a written certificate from an approved, nationally recognized testing organization equipped to perform such services, stating that the items have been tested and conform to the requirements and testing methods of the specified agency may be submitted. When performance requirements of this project's drawings and specifications vary from standard ARI rating conditions, computer printouts, catalog, or other application data certified by ARI or a nationally recognized laboratory as described above shall be included. If ARI does not have a current certification program that encompasses such application data, the manufacturer may self certify that his application data complies with project performance requirements in accordance with the specified test standards.

SD-10 Operation and Maintenance Data

Operations and maintenance data shall be provided for all equipment, components and items of work specified herein where standard data is routinely and commercially available by the manufacturer. Submit in accordance with Section 01781 - OPERATIONS AND MAINTENANCE DATA.

1.3 SAFETY REQUIREMENTS

Exposed moving parts, parts that produce high operating temperature, parts which may be electrically energized, and parts that may be a hazard to

operating personnel shall be insulated, fully enclosed, guarded, or fitted with other types of safety devices. Safety devices shall be installed so that proper operation of equipment is not impaired. Welding and cutting safety requirements shall be in accordance with AWS Z49.1.

1.4 DELIVERY, STORAGE, AND HANDLING

Stored items shall be protected from the weather, humidity and temperature variations, dirt and dust, or other contaminants. Proper protection and care of all material both before and during installation shall be the Contractor's responsibility. Any materials found to be damaged shall be replaced at the Contractor's expense. During installation, piping and similar openings shall be capped to keep out dirt and other foreign matter.

1.5 PROJECT/SITE CONDITIONS

1.5.1 Verification of Dimensions

The Contractor shall become familiar with all details of the work, verify all dimensions in the field, and advise the Contracting Officer of any discrepancy before performing any work.

1.5.2 Drawings

Because of the small scale of the drawings, it is not possible to indicate all offsets, fittings, and accessories that may be required. The Contractor shall carefully investigate the plumbing, fire protection, electrical, structural and finish conditions that would affect the work to be performed and arrange such work accordingly, furnishing required offsets, fittings, and accessories to meet such conditions.

PART 2 PRODUCTS

2.1 STANDARD COMMERCIAL PRODUCTS

Materials and equipment shall be standard products of a manufacturer regularly engaged in the manufacturing of such products, which are of a similar material, design and workmanship. The standard products shall have been in satisfactory commercial or industrial use for 2 years prior to bid opening. The 2 year use shall include applications of equipment and materials under similar circumstances and of similar size. The 2 years experience shall be satisfactorily completed by a product which has been sold or is offered for sale on the commercial market through advertisements, manufacturer's catalogs, or brochures. Products having less than a 2 year field service record shall be acceptable if a certified record of satisfactory field operation, for not less than 6000 hours exclusive of the manufacturer's factory tests, can be shown. Products shall be supported by a service organization. System components shall be environmentally suitable for the indicated locations.

2.2 NAMEPLATES

Major equipment including compressors, condensers, receivers, fans, and motors shall have the manufacturer's name, address, type or style, model or serial number, and catalog number on a plate secured to the item of equipment. Plates shall be durable and legible throughout equipment life and made of stainless steel. Plates shall be fixed in prominent locations with nonferrous screws or bolts.

2.3 ELECTRICAL WORK

Electrical equipment, motors, motor efficiencies, and wiring shall be in accordance with Section 16415 ELECTRICAL WORK, INTERIOR. Electrical motor driven equipment specified shall be provided complete with motors, motor starters, and controls. Electrical characteristics shall be as shown, and unless otherwise indicated, all motors of 1 horsepower and above with open, dripproof, totally enclosed, or explosion proof fan cooled enclosures, shall be high efficiency type. Field wiring shall be in accordance with manufacturer's instructions. Each motor shall conform to NEMA MG 1 and NEMA MG 2 and be of sufficient size to drive the equipment at the specified capacity without exceeding the nameplate rating of the motor. Motors shall be continuous duty with the enclosure specified. Motor starters shall be provided complete with thermal overload protection and other appurtenances necessary for the motor control indicated. Motors shall be furnished with a magnetic across-the-line or reduced voltage type starter as required by the manufacturer. Motor duty requirements shall allow for maximum frequency start-stop operation and minimum encountered interval between start and stop. Motors shall be sized for the applicable loads. Motor torque shall be capable of accelerating the connected load within 20 seconds with 80 percent of the rated voltage maintained at motor terminals during one starting period. Motor bearings shall be fitted with grease supply fittings and grease relief to outside of enclosure. Manual or automatic control and protective or signal devices required for the operation specified and any control wiring required for controls and devices specified, but not shown, shall be provided.

2.4 UNITARY EQUIPMENT, PACKAGE ROOFTOP UNITS

Units shall be air-cooled factory assembled, weatherproof packaged unit as indicated. Unit shall be the air-conditioning with gas-fired heating type conforming to applicable Underwriters Laboratories (UL) standards including UL 1995. Unit shall be rated in accordance with ARI 340/360. Unit shall be provided with equipment as specified in paragraph "Unitary Equipment Components". Evaporator or supply fans shall be double-width, double inlet, forward curved, backward inclined, or airfoil blade, centrifugal scroll type. Motors shall have totally enclosed enclosures. Condenser fans shall be manufacturer's standard for the unit specified and may be either propeller or centrifugal scroll type. Unit shall be provided with a factory operating charge of refrigerant and oil or a holding charge. Unit shipped with a holding charge shall be field charged with refrigerant and oil in accordance with manufacturer's recommendations. Outdoor unit shall produce a maximum ARI sound rating of 8.8 bels in accordance with ARI 370. Units shall be provided with gas-fired heating and with an option to operate in economizer mode, to take advantage of free cooling, at right outside air temperature.

2.4.1 Air-to-Refrigerant Coils

Air-to-refrigerant coils shall have copper or aluminum tubes of 3/8 inch minimum diameter with copper or aluminum fins that are mechanically bonded or soldered to the tubes. Coils shall be protected with a minimum 3 mil thick phenolic coating. Casing shall be galvanized steel or aluminum. Contact of dissimilar metals shall be avoided. Coils shall be tested in accordance with ASHRAE 15 at the factory and be suitable for the working pressure of the installed system. Each coil shall be dehydrated and sealed after testing and prior to evaluation and charging. Each unit shall be provided with a factory operating charge of refrigerant and oil or a holding charge. Unit shipped with a holding charge shall be field charged.

Separate expansion devices shall be provided for each compressor circuit.

2.4.2 Compressor

Compressor shall be direct drive, semi-hermetic or hermetic reciprocating, or scroll type capable of operating at partial load conditions. Compressor shall be capable of continuous operation down to the lowest step of unloading as specified. Compressors of 10 tons and larger shall be provided with capacity reduction devices to produce automatic capacity reduction of at least 50 percent. If standard with the manufacturer, two or more compressors may be used in lieu of a single compressor with unloading capabilities, in which case the compressors shall operate in sequence, and each compressor shall have an independent refrigeration circuit through the condenser and evaporator. Compressors shall start in the unloaded position. Each compressor shall be provided with vibration isolators, crankcase heater, thermal overloads, lubrication pump,high and low pressure safety cutoffs and protection against short cycling.

2.4.3 Refrigeration Circuit

Refrigerant containing components shall comply with ASHRAE 15 and be factory tested, cleaned, dehydrated, charged, and sealed. Refrigerant charging valves and connections, and pumpdown valves shall be provided for each circuit. Filter-drier shall be provided in each liquid line and be reversible-flow type. Refrigerant flow control devices shall be an adjustable superheat thermostatic expansion valve with external equalizer matched to coil, capillary or thermostatic control, and a pilot solenoid controlled, leak-tight, four-way refrigerant flow reversing valve.

2.4.4 Unit Controls

Unit shall be internally prewired with a 120 volt control circuit powered by an internal transformer. Terminal blocks shall be provided for power wiring and external control wiring. Unit shall have cutoffs for high and low pressure, low oil pressure for compressors with positive displacement oil pumps, supply fan failure and safety interlocks on all service panels. Head pressure controls shall sustain unit operation with ambient temperature of 0. Adjustable-cycle timers shall prevent short-cycling. Multiple compressors shall be staged by means of a time delay. Unit shall be internally protected by fuses or a circuit breaker in accordance with UL 1995. Low cost cooling shall be made possible by means of a control circuit which will modulate dampers to provide 100 percent outside air while locking out compressors.

2.5 REMOTE AIR-COOLED CONDENSING UNIT

Each remote condenser coil shall be fitted with a manual isolation valve and an access valve on the coil side. Saturated refrigerant condensing temperature shall not exceed 120 degrees F at 95 degrees F ambient. Unit shall be provided with low ambient condenser controls to ensure proper operation in an ambient temperature of 0 degrees F. Fan and cabinet construction shall be provided as specified in paragraph "System Components". Fan and condenser motors shall have open dripproof enclosures.

2.5.1 Air-Cooled Condenser

Unit shall be rated in accordance with ARI 460 and conform to the requirements of UL 1995. Unit shall be factory fabricated, tested, packaged, and self-contained. Unit shall be complete with casing,

propeller or centrifugal type fans, heat rejection coils, connecting piping and wiring, and all necessary appurtenances.

2.5.1.1 Connections

Interconnecting refrigeration piping, electrical power, and control wiring between the condensing unit and the indoor unit shall be provided as required and as indicated. Electrical and refrigeration piping terminal connections between condensing unit and evaporator units shall be provided.

2.5.1.2 Head Pressure Control and Liquid Subcooling

Controls shall be set to produce a minimum of 95 degrees F saturated refrigerant condensing temperature. Unit shall be provided with a liquid subcooling circuit which shall ensure proper liquid refrigerant flow to the expansion device over the specified application range of the condenser. Unit shall be provide with manufacturer's standard liquid subcooling. Subcooling circuit shall be liquid sealed.

2.5.1.3 Condensing Coil

Coils shall have copper tubes of 3/8 inch minimum diameter with aluminum fins that are mechanically bonded or soldered to the tubes. Coils shall be protected with a minimum 3 mil thick phenolic coating. Casing shall be galvanized steel or aluminum. Contact of dissimilar metals shall be avoided. Coils shall be tested in accordance with ASHRAE 15 at the factory and be suitable for the working pressure of the installed system. Each coil shall be dehydrated and sealed after testing and prior to evaluation and charging. Each unit shall be provided with a factory operating charge of refrigerant and oil or a holding charge. Unit shipped with a holding charge shall be field charged. Separate expansion devices shall be provided for each compressor circuit.

2.5.1.4 Unit Controls

The control system shall be complete with required accessories for regulating condenser pressure by fan cycling, solid-state variable fan speed, modulating condenser coil or fan dampers, flooding the condenser, or a combination of the above. Unit mounted control panels or enclosures shall be constructed in accordance with applicable requirements of NFPA 70 and housed in NEMA ICS 6, Class 1 or 3A enclosures. Controls shall include control transformer, fan motor solid-state speed control, time delay start-up, overload protective devices, interface with local and remote components, and intercomponent wiring to terminal block points.

2.5.2 Compressor

Unit shall be rated in accordance with ARI 500. Compressor shall be direct drive, semi-hermetic or hermetic reciprocating, or scroll type capable of operating at partial load conditions. Compressor shall be capable of continuous operation down to the lowest step of unloading as specified. If standard with the manufacturer, two or more compressors may be used in lieu of a single compressor with unloading capabilities, in which case the compressors will operate in sequence, and each compressor shall have an independent refrigeration circuit through the condenser and evaporator. Each compressor shall start in the unloaded position. Each compressor shall be provided with vibration isolators, crankcase heater, lubrication pump, thermal overloads, and high pressure safety cutoffs and protection against short cycling.

2.6 AIR-CONDITIONERS FOR ELECTRONIC DATA PROCESSING (EDP) SPACES (CRU)

Computer Room Unit for communications room shall be of the following types as indicated on the equipment schedules on the drawings:

Type 1: Split system, outdoor air-cooled condensing unit and indoor evaporator with supply fan, evaporator coil, and discharge grille.

Unit shall be air-cooled, air-conditioning unit as indicated on the schedules. Units shall be designed and constructed for automatic control of space conditions. Unit shall be in accordance with ASHRAE 127 and UL 1995. Unit shall be rated in accordance with ARI 210/240. ARI certification is not required. Each system shall be designed and constructed for maximum reliability and ease of maintenance. Necessary redundancy, access to refrigeration circuits, means of troubleshooting, and malfunction alarms shall be provided. Unit shall be provided with necessary fans, air filters, coil frost protection, liquid receiver, internal dampers, mixing boxes, supplemental heat, and cabinet construction as specified in paragraph "System Components". Evaporator or supply fans shall be double-width, double inlet, forward curved centrifugal scroll type. Condenser or outdoor fans shall be manufacturer's standard for unit specified and may be either propeller or centrifugal scroll type. Fan and condenser motors shall have open dripproof enclosures. Remote unit shall be as specified in paragraph REMOTE CONDENSING UNIT.

2.6.1 Air-to-Refrigerant Coils

Evaporator and condenser coil shall have copper tubes of 3/8 inch minimum diameter with copper or aluminum fins that are mechanically bonded or soldered to the tubes. Coil shall be protected with a minimum 3 mil thick phenolic coating. Casing shall be galvanized steel or aluminum. Contact of dissimilar metals shall be avoided. Coil shall be tested in accordance with ASHRAE 15 at the factory and be suitable for the working pressure of the installed system. Coil shall be dehydrated and sealed after testing and prior to evaluation and charging. Each unit shall be provided with a factory operating charge of refrigerant and oil or a holding charge. Unit shipped with a holding charge shall be field charged. Separate expansion devices shall be provided for each compressor circuit.

2.6.2 Compressor

Compressor shall be direct drive, semi-hermetic or hermetic reciprocating, or scroll type capable of operating at partial load conditions. Compressor shall be capable of continuous operation down to the lowest step of unloading as specified. Compressors of 7-1/2 tons and larger shall be provided with capacity reduction devices to produce automatic capacity reduction of at least 50 percent. If standard with the manufacturer, two or more compressors may be used in lieu of a single compressor with unloading capabilities, in which case the compressors will operate in sequence, and each compressor shall have an independent refrigeration circuit through the condenser and evaporator. Compressor shall start in the unloaded position. Compressor shall be provided with vibration isolators, crankcase heater, lubrication pump, thermal overloads, and high pressure safety cutoffs and protection against short cycling.

2.6.3 Refrigeration Circuit

Refrigerant-containing components shall comply with ASHRAE 15 and be

factory tested, cleaned, dehydrated, charged, and sealed. Refrigerant charging valves and connections, and pumpdown valves shall be provided for each circuit. Filter-drier shall be provided in each liquid line and be reversible-flow type.

2.6.4 Unit Controls

A unit's basic functions and space ambient conditions shall be controllable from a microprocessor controller furnished with each unit. Controller shall have LCD display and shall provide temperature setpoint and sensitivity adjustment, humidity setpoints and sensitivity adjustment, digital display of temperature, humidity setpoints and sensitivities, and alarm conditions.

2.6.4.1 Externally Accessible Controls

The following controls shall be externally accessible:

a. Start and stop total system functions.

b. Audible alarm silence.

c. Main power disconnect.

2.6.4.2 Status Indicators

The following status indicators shall be externally visible:

a. Power On.

b. System On.

c. Malfunction.

d. Provision for remote alarm status indication.

2.6.4.3 Alarmed Conditions

The following system status conditions shall be both audibly and visually alarmed:

a. Loss of air flow.

b. Dirty filters.

c. Compressor overload or lock-out (compressor high head pressure and low suction pressure).

d. High room temperature.

2.6.4.4 Space Temperature

Space temperature shall be controlled within plus or minus 1-1/2 degrees F of the set point over a range of 60 to 90 degrees F with a set point of 75. Space relative humidity shall be controlled within plus or minus 5 percent of the set point over a range of 20 to 80 percent with a set point of 50 percent.

2.6.4.5 Safety Controls

Safety controls shall include the following:

a. Fused, unfused or line-break circuit breaker disconnects, as indicated or required.

b. Automatic pump-out or pump-down liquid flooding controls.

c. High refrigerant pressure cutout.

d. Low refrigerant pressure cutout where automatic pump-down is not provided.

e. Accessible hermetic and open compressor low oil pressure cutout.

f. Elapsed time meter for each compressor where load equalization is not incorporated.

g. Lead and lag compressor selector switch, when compatible with system.

2.6.5 Cabinet Construction

Cabinet shall be totally enclosed. Enclosure surfaces shall be pulsation free, with hinged and removable doors and panels for vertical side or front access to unit components. Routine maintenance access to compressor and system control components shall be possible without unit shut-down. Enclosure surfaces shall be thermally and acoustically insulated. Interior baffle and compartment surfaces shall be galvanized steel. Drain pans shall collect all condensate and be steel with external insulation as required. Surface mounting steel pads and vibration isolating pads shall be provided. Enclosure surfaces shall be prepared, primed and finished. Paint and finishes shall comply with the requirements specified in paragraph FACTORY COATING.

2.7 EQUIPMENT EFFICIENCY

Air-cooled units shall have an efficiency of SEER=10.0.

2.8 UNITARY EQUIPMENT COMPONENTS

2.8.1 Refrigerant and Oil

Refrigerant shall be one of the fluorocarbon gases. Refrigerants shall have number designations and safety classifications in accordance with ASHRAE 34. Refrigerants shall meet the requirements of ARI 700 as a minimum. Refrigerants shall have an Ozone Depletion Potential (ODP) of less than or equal to 0.05. Contractor shall provide and install a complete charge of refrigerant for the installed system as recommended by the manufacturer. Except for factory sealed units, two complete charges of lubricating oil for each compressor crankcase shall be furnished. One charge shall be used during the system performance testing period. Following the satisfactory completion of the performance testing, the oil shall be drained and replaced with a second charge. Lubricating oil shall be of a type and grade recommended by the manufacturer for each compressor. Where color leak indicator dye is incorporated, charge shall be in accordance with manufacturer's recommendation.

2.8.2 Fans

Fan wheel shafts shall be supported by either maintenance-accessible lubricated antifriction block-type bearings, or permanently lubricated ball bearings. Unit fans shall be selected to produce the cfm required at the fan total pressure. Motor starters, if applicable, shall be magnetic across-the-line type with a totally enclosed enclosure. Thermal overload protection shall be of the manual or automatic-reset type. Fan wheels or propellers shall be constructed of aluminum or galvanized steel. Centrifugal fan wheel housings shall be of galvanized steel, and both centrifugal and propeller fan casings shall be constructed of aluminum or galvanized steel. Steel elements of fans, except fan shafts, shall be hot-dipped galvanized after fabrication or fabricated of mill galvanized steel. Mill-galvanized steel surfaces and edges damaged or cut during fabrication by forming, punching, drilling, welding, or cutting shall be recoated with an approved zinc-rich compound. Fan wheels or propellers shall be statically and dynamically balanced. Forward curved fan wheels shall be limited to 16 inches. Direct-drive fan motors shall be of the multiple-speed variety. Belt-driven fans shall have adjustable sheaves to provide not less than 70 percent fan-speed adjustment. The sheave size shall be selected so that the fan speed at the approximate midpoint of the sheave adjustment will produce the specified air quantity. Centrifugal scroll-type fans shall be provided with streamlined orifice inlet and V-belt drive. Each drive will be independent of any other drive. Propeller fans shall be direct-drive drive type with fixed pitch blades. V-belt driven fans shall be mounted on a corrosion protected drive shaft supported by either maintenance-accessible lubricated antifriction block-type bearings, or permanently lubricated ball bearings. Each drive will be independent of any other drive. Drive bearings shall be protected with water slingers or shields. V-belt drives shall be fitted with guards where exposed to contact by personnel and fixed pitch sheaves.

2.8.3 Air Filters

Air filters shall be listed in accordance with requirements of UL 900, except high efficiency particulate air filters of 99.97 percent efficiency by the DOP Test Method shall be as listed under the label service and shall meet the requirements of UL 586.

2.8.3.1 Replaceable Media Filters

Replaceable media filters shall be the dry-media type, of the size required to suit the application. Filtering media shall be not less than 2 inches thick fibrous glass media pad supported by a structural wire grid or woven wire mesh. Pad shall be enclosed in a holding frame of not less than 16 gauge galvanized steel, and equipped with quick-opening mechanism for changing filter media. The air flow capacity of the filter shall be based on net filter face velocity not exceeding 400 feet per minute, with initial resistance of 0.13 inches water gauge. Average efficiency shall be not less than 25 percent when tested in accordance with ASHRAE 52.1.

2.8.4 Coil Frost Protection

Each circuit shall be provided with a coil frost protection system which is a manufacturer's standard. The coil frost protection system shall use a temperature sensor in the suction line of the compressor to shut the compressor off when coil frosting occurs. Timers shall be used to prevent the compressor from rapid cycling.

2.8.5 Pressure Vessels

Pressure vessels shall conform to ASME BPV VIII Div 1 or UL 207, as applicable for maximum and minimum pressure or temperature encountered. Where referenced publications do not apply, pressure components shall be tested at 1-1/2 times design working pressure. Refrigerant wetted carbon steel surfaces shall be pickled or abrasive blasted free of mill scale, cleaned, dried, charged, and sealed.

2.8.5.1 Oil Separator

Separator shall be the high efficiency type and be provided with removable flanged head for ease in removing float assembly and removable screen cartridge assembly. Pressure drop through a separator shall not exceed 10 psi during the removal of hot gas entrained oil. Connections to compressor shall be as recommended by the compressor manufacturer. Separator shall be provided with an oil float valve assembly or needle valve and orifice assembly, drain line shutoff valve, sight glass, filter for removal of all particulate sized 10 microns and larger, thermometer and low temperature thermostat fitted to thermal well, external float valve fitted with three-valve bypass, and strainer.

2.8.5.2 Oil Reservoir

Reservoir capacity shall equal one charge of all connected compressors. Reservoir shall be provided with an external liquid gauge glass, plugged drain, and isolation valves. Vent piping between the reservoir and the suction header shall be provided with a 5 psi pressure differential relief valve. Reservoir shall be provided with the manufacturer's standard filter on the oil return line to the oil level regulators.

2.8.6 Gas-Fired Heat Exchanger

Coil shall be constructed of aluminized-steel for natural-gas-fired burners. Burner controls shall include redundant single or dual gas valve with manual shut-off, direct-spark pilot ignition, electronic flame sensor, induced-draft blower, and flame rollout switch.

2.8.7 Economizer

Return- and outside-air dampers with neoprene seals, outside-air filter and hood. Provide damper motor equipped with fully modulating spring return with adjustable minimum position. Electronic-control system shall use outside-air enthalpy to adjust mixing dampers. Relief-air damper shall be gravity actuated or motor actuated with bird screen and hood.

2.9 ACCESSORIES

2.9.1 Condensate Pump

Provide condensate pump where indicated with capacity as required to remove condensate from cooling coil. Condensate pump unit shall be complete with integral float switch, pump, motor assembly, and reservoir.

2.9.2 Refrigerant Signs

Refrigerant signs shall be a medium-weight aluminum type with a baked enamel finish. Signs shall be suitable for indoor or outdoor service. Signs shall have a white background with red letters not less than 0.5 inches in height.

2.9.2.1 Installation Identification

Each new refrigeration system shall be provided with a refrigerant sign which indicates the following as a minimum:

a. Contractor's name

b. Refrigerant number and amount of refrigerant.

c. The lubricant identity and amount.

d. Field test pressure applied.

2.9.3 Gaskets

Gaskets shall conform to ASTM F 104 - classification for compressed sheet with nitrile binder and acrylic fibers for maximum 700 degrees F service.

2.9.4 Bolts and Nuts

Bolts and nuts shall be in accordance with ASTM A 307. The bolt head shall be marked to identify the manufacturer and the standard with which the bolt complies in accordance with ASTM A 307.

2.9.5 Bird Screen

Screen shall be in accordance with ASTM E 437, Type 1, Class 1, 2 by 2 mesh, 0.063 inch diameter aluminum wire or 0.031 inch diameter stainless steel wire.

2.10 FABRICATION

2.10.1 Factory Coating

Unless otherwise specified, equipment and component items, when fabricated from ferrous metal, shall be factory finished with the manufacturer's standard finish, except that items located outside of buildings shall have weather resistant finishes that will withstand 500 hours exposure to the salt spray test specified in ASTM B 117 using a 5 percent sodium chloride solution. Immediately after completion of the test, the specimen shall show no signs of blistering, wrinkling, cracking, or loss of adhesion and no sign of rust creepage beyond 1/8 inch on either side of the scratch mark. Cut edges of galvanized surfaces where hot-dip galvanized sheet steel is used shall be coated with a zinc-rich coating conforming to ASTM D 520, Type I.

2.10.2 Factory Applied Insulation

Refrigeration equipment shall be provided with factory installed insulation on surfaces subject to sweating including the suction line piping. Where motors are the gas-cooled type, factory installed insulation shall be provided on the cold-gas inlet connection to the motor per manufacturer's standard practice. Factory insulated items installed outdoors are not required to be fire-rated. As a minimum, factory insulated items installed indoors shall have a flame spread index no higher than 75 and a smoke developed index no higher than 150. Factory insulated items (no jacket) installed indoors and which are located in air plenums, in ceiling spaces, and in attic spaces shall have a flame spread index no higher than 25 and a

smoke developed index no higher than 50. Flame spread and smoke developed indexes shall be determined by ASTM E 84. Insulation shall be tested in the same density and installed thickness as the material to be used in the actual construction. Material supplied by a manufacturer with a jacket shall be tested as a composite material. Jackets, facings, and adhesives shall have a flame spread index no higher than 25 and a smoke developed index no higher than 50 when tested in accordance with ASTM E 84.

2.11 SUPPLEMENTAL COMPONENTS/SERVICES

2.11.1 Refrigerant Piping

Refrigerant piping for split-system unitary equipment shall be provided and installed in accordance with Section 15182 REFRIGERANT PIPING.

2.11.2 Ductwork

Ductwork shall be provided and installed in accordance with Section 15895 AIR SUPPLY, DISTRIBUTION, VENTILATION, AND EXHAUST SYSTEM.

2.11.3 Temperature Controls

Temperature controls shall be in accordance with Section 15951 DIRECT DIGITAL CONTROL FOR HVAC CONTROL.

2.12 SPARE PARTS

Submit spare parts data in accordance with 1.2 SUBMITTALS.

PART 3 EXECUTION

3.1 INSTALLATION

Work shall be performed in accordance with the manufacturer's published diagrams, recommendations, and equipment warranty requirements. Where equipment is specified to conform to the requirements of ASME BPV VIII Div 1 and ASME BPV IX, the design, fabrication, and installation of the system shall conform to ASME BPV VIII Div 1 and ASME BPV IX.

3.1.1 Equipment

Refrigeration equipment and the installation thereof shall conform to ASHRAE 15. Necessary supports shall be provided for all equipment, appurtenances, and pipe as required, including frames or supports for compressors, pumps, condensers, and similar items. Compressors shall be isolated from the building structure. If mechanical vibration isolators are not provided, vibration absorbing foundations shall be provided. Each foundation shall include isolation units consisting of machine and floor or foundation fastenings, together with intermediate isolation material. Other floor-mounted equipment shall be set on not less than a 6 inch concrete pad doweled in place. Concrete foundations for floor mounted pumps shall have a mass equivalent to three times the weight of the components, pump, base plate, and motor to be supported. In lieu of concrete pad foundation, concrete pedestal block with isolators placed between the pedestal block and the floor may be provided. Concrete pedestal block shall be of mass not less than three times the combined pump, motor, and base weights. Isolators shall be selected and sized based on load-bearing requirements and the lowest frequency of vibration to be

isolated. Lines connected to pumps mounted on pedestal blocks shall be provided with flexible connectors. Foundation drawings, bolt-setting information, and foundation bolts shall be furnished prior to concrete foundation construction for all equipment indicated or required to have concrete foundations. Concrete for foundations shall be as specified in Section 03300 CAST-IN-PLACE STRUCTURAL CONCRETE. Equipment shall be properly leveled, aligned, and secured in place in accordance with manufacturer's instructions.

3.1.2 Field Applied Insulation

Field applied insulation shall be as specified in Section 15080 THERMAL INSULATION FOR MECHANICAL SYSTEMS, except as defined differently herein..

3.1.3 Field Painting

Painting required for surfaces not otherwise specified, and finish painting of items only primed at the factory are specified in Section 09900 PAINTING, GENERAL.

3.2 CLEANING AND ADJUSTING

Equipment shall be wiped clean, with all traces of oil, dust, dirt, or paint spots removed. Temporary filters shall be provided for all fans that are operated during construction, and new filters shall be installed after all construction dirt has been removed from the building. System shall be maintained in this clean condition until final acceptance. Bearings shall be properly lubricated with oil or grease as recommended by the manufacturer. Belts shall be tightened to proper tension. Control valves and other miscellaneous equipment requiring adjustment shall be adjusted to setting indicated or directed. Fans shall be adjusted to the speed indicated by the manufacturer to meet specified conditions. Testing, adjusting, and balancing shall be as specified in Section 15990 TESTING, ADJUSTING AND BALANCING OF HVAC SYSTEMS.

3.3 REFRIGERANT TESTS, CHARGING, AND START-UP

Split-system refrigerant piping systems shall be tested and charged as specified in Section 15182 REFRIGERANT PIPING. Packaged refrigerant systems which are factory charged shall be checked for refrigerant and oil capacity to verify proper refrigerant levels per manufacturer's recommendations. Following charging, packaged systems shall be tested for leaks with a halide torch or an electronic leak detector.

3.3.1 Refrigerant Leakage

If a refrigerant leak is discovered after the system has been charged, the leaking portion of the system shall immediately be isolated from the remainder of the system and the refrigerant pumped into the system receiver or other suitable container. Under no circumstances shall the refrigerant be discharged into the atmosphere.

3.3.2 Contractor's Responsibility

The Contractor shall, at all times during the installation and testing of the refrigeration system, take steps to prevent the release of refrigerants into the atmosphere. The steps shall include, but not be limited to, procedures which will minimize the release of refrigerants to the atmosphere and the use of refrigerant recovery devices to remove

refrigerant from the system and store the refrigerant for reuse or reclaim. At no time shall more than 3 ounces of refrigerant be released to the atmosphere in any one occurrence. Any system leaks within the first year shall be repaired in accordance with the requirements herein at no cost to the Government including material, labor, and refrigerant if the leak is the result of defective equipment, material, or installation.

3.4 SYSTEM PERFORMANCE TESTS

Before each refrigeration system is accepted, tests to demonstrate the general operating characteristics of all equipment shall be conducted by a registered professional engineer or an approved manufacturer's start-up representative experienced in system start-up and testing, at such times as directed. Tests shall cover a period of not less than 48 hours for each system and shall demonstrate that the entire system is functioning in accordance with the drawings and specifications. Corrections and adjustments shall be made as necessary and tests shall be re-conducted to demonstrate that the entire system is functioning as specified. Prior to acceptance, service valve seal caps and blanks over gauge points shall be installed and tightened. Any refrigerant lost during the system startup shall be replaced. If tests do not demonstrate satisfactory system performance, deficiencies shall be corrected and the system shall be retested. Tests shall be conducted in the presence of the Contracting Officer. Water and electricity required for the tests will be furnished by the Government. Any material, equipment, instruments, and personnel required for the test shall be provided by the Contractor. Field tests shall be coordinated with Section 15990 TESTING, ADJUSTING, AND BALANCING OF HVAC SYSTEMS.

3.5 DEMONSTRATIONS

Contractor shall conduct a training course for the operating staff as designated by the Contracting Officer. The training period shall consist of a total 4 hours of normal working time and start after the system is functionally completed but prior to final acceptance tests. The field posted instructions shall cover all of the items contained in the approved operation and maintenance manuals as well as demonstrations of routine maintenance operations.

-- End of Section --

SECTION 15768

ELECTRIC SPACE HEATING EQUIPMENT
09/99

PART 1 GENERAL

1.1 REFERENCES

The publications listed below form a part of this specification to the extent referenced. The publications are referred to in the text by the basic designation only.

NATIONAL ELECTRICAL MANUFACTURERS ASSOCIATION (NEMA)

NEMA ICS 2	(1993) Industrial Control and Systems Controllers, Contactors and Overload Relays, Rated Not More Than 2000 Volts AC or 750 Volts DC

NATIONAL FIRE PROTECTION ASSOCIATION (NFPA)

NFPA 70	(1999) National Electrical Code

UNDERWRITERS LABORATORIES (UL)

UL 1025	(1980; R 1990, Bul. 1991) Electric Air Heaters

1.2 GENERAL REQUIREMENTS

Section 16050, "Basic Electrical Materials and Methods," applies to this section, with the additions and modifications specified herein.

1.3 SUBMITTALS

Submit the following in accordance with Section 01330, "Submittal Procedures."

SD-02 Shop Drawings

Heater installation drawing; G

SD-03 Product Data

Electric unit heaters; G

Thermostat; G

SD-10 Operation and Maintenance Data; G

Operation and maintenance data shall be provided for all equipment, components and items of work specified herein where standard data is routinely and commercially available by the manufacturer. Submit in accordance with Section 01781 OPERATION AND MAINTENANCE DATA.

PART 2 PRODUCTS

2.1 ELECTRIC UNIT HEATERS

UL 1025; wattage, voltage, phase, number of steps, Btu/hr and CFM as indicated. Provide control-circuit terminals and single source of power supply. Limit leaving air temperature to 140 degrees F with entering air of 60 degrees F.

2.1.1 Enclosure

Minimum 20 gage steel.

2.1.2 Heating Element

Nickel chromium heating wire element, free from expansion noise and 60 Hz hum. Embed element in magnesium-oxide insulating refractory. Seal element in high-mass steel or corrosion-resisting metallic sheath with fins. Enclose element ends in terminal box. Provide not more than six fins per inch. Limit fin surface temperature 550 degrees F at any point during normal operation.

2.1.3 Controls

Include limit controls for overheat protection of heaters. For remote thermostatic operation, provide contactor rated for 100,000 duty cycles. Provide a control transformer to supply 120-volt thermostat control circuit for each heater.

2.1.4 Wiring

Completely factory-prewired to terminal strips, ready to receive branch circuit and control connections for 140 degrees F copper wiring.

2.1.5 Thermostat

Provide tamper resistant space thermostat, adjustable without requiring removal of heater components. Thermostat operating range shall be approximately 50 degrees F to a maximum of 75 degrees F with operating differential of 3 degrees F or less.

2.1.6 Disconnect Means

Provide factory-installed safety disconnect switch in the housing or in an auxiliary matching control section with "off" position marking on the face plate.

2.2 CONTACTORS

NEMA ICS 2, Enclosure Type 1.

PART 3 EXECUTION

3.1 INSTALLATION

Install in conformance with the approved heater installation drawing, NFPA 70, UL listing, and manufacturer's instructions, with necessary clearances for air circulation, maintenance, inspection, service testing and repair. Connect to electrical supply in accordance with Section 16415 ELECTRICAL WORK, INTERIOR.

3.1.1 Unit Heaters

Mount units plumb, square and level with ceiling and walls.

3.1.2 Remote Thermostat

Mount remote room space thermostats 4 feet 6 inches above finished floor on wall. Connect remote thermostats with conduit and wiring to heaters as indicated.

3.2 FIELD QUALITY CONTROL

Provide necessary personnel, instruments, and equipment to perform tests. Notify the Contracting Officer 5 working days prior to scheduled testings and locations.

3.2.1 Field Inspection

Prior to initial operation, inspect installed equipment for conformance with drawings and specifications.

3.2.2 Insulation Resistance Tests

Test 600-volt wiring to verify that no short circuits or grounds exist. Tests shall be made using an instrument which applies a voltage of approximately 500 volts and provides a direct reading of resistance in ohms.

3.2.3 Operational Tests

Test equipment circuits and devices to demonstrate proper operation. Test each item of control equipment not less than 5 times.

-- End of Section --

SECTION 15895

AIR SUPPLY, DISTRIBUTION, VENTILATION, AND EXHAUST SYSTEM
02/94

PART 1 GENERAL

1.1 REFERENCES

The publications listed below form a part of this specification to the extent referenced. The publications are referred to in the text by basic designation only.

AIR CONDITIONING AND REFRIGERATION INSTITUTE (ARI)

ARI Guideline D	(1996) Application and Installation of Central Station Air-Handling Units

AIR MOVEMENT AND CONTROL ASSOCIATION (AMCA)

AMCA 210	(1985) Laboratory Methods of Testing Fans for Rating
AMCA 300	(1996) Reverberant Room Method for Sound Testing of Fans

AMERICAN BEARING MANUFACTURERS ASSOCIATION (ABMA)

AFBMA Std 9	(1990) Load Ratings and Fatigue Life for Ball Bearings
AFBMA Std 11	(1990) Load Ratings and Fatigue Life for Roller Bearings

AMERICAN NATIONAL STANDARDS INSTITUTE (ANSI)

ANSI Z83.4	(1991; Z83.4a) Direct Gas-Fired Make-Up Air Heaters
ANSI Z21.66	(1996) Automatic Vent Damper Devices for Use With Gas-Fired Appliances

AMERICAN SOCIETY FOR TESTING AND MATERIALS (ASTM)

ASTM A 53/A 53M	(1999b) Pipe, Steel, Black and Hot-Dipped, Zinc-Coated, Welded and Seamless
ASTM A 123/A 123M	(1997ael) Zinc (Hot-Dip Galvanized) Coatings on Iron and Steel Products
ASTM A 924/A 924M	(1999) General Requirements for Steel Sheet, Metallic-Coated by the Hot-Dip Process
ASTM B 117	(1997) Operating Salt Spray (Fog) Apparatus
ASTM C 916	(1985; R 1996el) Adhesives for Duct

	Thermal Insulation
ASTM C 1071	(1998) Thermal and Acoustical Insulation (Glass Fiber, Duct Lining Material)
ASTM D 520	(1984; R 1995el) Zinc Dust Pigment
ASTM D 1654	(1992) Evaluation of Painted or Coated Specimens Subjected to Corrosive Environments
ASTM D 3359	(1997) Measuring Adhesion by Tape Test
ASTM E 84	(1999) Surface Burning Characteristics of Building Materials
ASTM E 437	(1992; R 1997) Industrial Wire Cloth and Screens (Square Opening Series)

AMERICAN SOCIETY OF HEATING, REFRIGERATING AND AIR-CONDITIONING ENGINEERS (ASHRAE)

ASHRAE 52.1	(1992) Gravimetric and Dust-Spot Procedures for Testing Air-Cleaning Devices Used in General Ventilation for Removing Particulate Matter
ASHRAE 70	(1991) Method of Testing for Rating the Performance of Air Outlets and Inlets

INTERNATIONAL APPROVAL SERVICES (IAS)

IAS Directory	(1998) IAS Directory of AGA & CGA Certified Appliances and Accessories

MANUFACTURERS STANDARDIZATION SOCIETY OF THE VALVE AND FITTINGS INDUSTRY (MSS)

MSS SP-58	(1993) Pipe Hangers and Supports - Materials, Design and Manufacture
MSS SP-69	(1996) Pipe Hangers and Supports - Selection and Application

NATIONAL ELECTRICAL MANUFACTURERS ASSOCIATION (NEMA)

NEMA MG 1	(1998) Motors and Generators

NATIONAL FIRE PROTECTION ASSOCIATION (NFPA)

NFPA 54	(1999) National Fuel Gas Code
NFPA 90A	(1999) Installation of Air Conditioning and Ventilating Systems
NFPA 96	(1998) Ventilation Control and Fire Protection of Commercial Cooking Equipment
NFPA 211	(2000) Standard for Chimneys, Fireplaces,

	Vents, and Solid Fuel-Burning Appliances

SHEET METAL & AIR CONDITIONING CONTRACTORS' NATIONAL ASSOCIATION (SMACNA)

SMACNA HVAC Duct Const Stds	(1995; Addenda Nov 1997) HVAC Duct Construction Standards - Metal and Flexible
SMACNA Leakage Test Mnl	(1985) HVAC Air Duct Leakage Test Manual

UNDERWRITERS LABORATORIES (UL)

UL 181	(1996; Rev Dec 1998) Factory-Made Air Ducts and Air Connectors
UL 214	(1997) Tests for Flame-Propagation of Fabrics and Films
UL 586	(1996; Rev thru Aug 1999) High-Efficiency, Particulate, Air Filter Units
UL 705	(1994; Rev thru Feb 1999) Power Ventilators
UL 723	(1996; Rev thru Dec 1998) Test for Surface Burning Characteristics of Building Materials
UL 900	(1994; Rev thru Nov 1999) Test Performance of Air Filter Units
UL Bld Mat Dir	(1999) Building Materials Directory
UL Elec Const Dir	(1999) Electrical Construction Equipment Directory
UL Gas & Oil Dir	(1999) Gas and Oil Equipment Directory

1.2 COORDINATION OF TRADES

Ductwork, piping offsets, fittings, and accessories shall be furnished as required to provide a complete installation and to eliminate interference with other construction.

1.3 DELIVERY AND STORAGE

Equipment delivered and placed in storage shall be stored with protection from the weather, humidity and temperature variations, dirt and dust, or other contaminants.

1.4 SUBMITTALS

Government approval is required for submittals with a "G" designation; submittals not having a "G" designation are for information only. When used, a designation following the "G" designation identifies the office that will review the submittal for the Government. The following shall be submitted in accordance with Section 01330 SUBMITTAL PROCEDURES:

SD-02 Shop Drawings

Drawings; G
Installation; G

Drawings shall consist of equipment layout including assembly and installation details and electrical connection diagrams; ductwork layout showing the location of all supports and hangers, typical hanger details, gauge reinforcement, reinforcement spacing rigidity classification, and static pressure and seal classifications; and piping layout showing the location of all guides and anchors, the load imposed on each support or anchor, and typical support details. Drawings shall include any information required to demonstrate that the system has been coordinated and will properly function as a unit and shall show equipment relationship to other parts of the work, including clearances required for operation and maintenance.

SD-03 Product Data

Components and Equipment; G

Manufacturer's catalog data shall be included with the detail drawings for the following items. The data shall be highlighted to show model, size, options, etc., that are intended for consideration. Data shall be adequate to demonstrate compliance with contract requirements for the following:

a. Piping Components

b. Ductwork Components

c. Air Systems Equipment

Test Procedures; G

Proposed test procedures for piping hydrostatic test, ductwork leak test, and performance tests of systems, at least 2 weeks prior to the start of related testing.

Similar Services; G

Statement demonstrating successful completion of similar services on at least 5 projects of similar size and scope, at least 2 weeks prior to submittal of other items required by this section.

Testing, Adjusting and Balancing; G

Proposed test schedules for hydrostatic test of piping, ductwork leak test, and performance tests, at least 2 weeks prior to the start of related testing.

Field Training; G

Proposed schedule for field training, at least 2 weeks prior to the start of related training.

SD-06 Test Reports

Performance Tests; G

Test reports for the piping hydrostatic test, ductwork leak test, and performance tests in booklet form, upon completion of testing. Reports shall document phases of tests performed including initial test summary, repairs/adjustments made, and final test results.

SD-10 Operation and Maintenance Data

Operation and maintenance data shall be provided for all equipment, components and items of work specified herein where standard data is routinely and commercially available by the manufacturer. Submit in accordance with Section 01781 OPERATION AND MAINTENANCE DATA.

PART 2 PRODUCTS

2.1 STANDARD PRODUCTS

Components and equipment shall be standard products of a manufacturer regularly engaged in the manufacturing of products that are of a similar material, design and workmanship. The standard products shall have been in satisfactory commercial or industrial use for 2 years before bid opening. The 2-year experience shall include applications of components and equipment under similar circumstances and of similar size. The 2 years must be satisfactorily completed by a product which has been sold or is offered for sale on the commercial market through advertisements, manufacturers' catalogs, or brochures. Products having less than a 2-year field service record will be acceptable if a certified record of satisfactory field operation, for not less than 6000 hours exclusive of the manufacturer's factory tests, can be shown. The equipment items shall be supported by a service organization.

2.2 ASBESTOS PROHIBITION

Asbestos and asbestos-containing products shall not be used.

2.3 NAMEPLATES

Equipment shall have a nameplate that identifies the manufacturer's name, address, type or style, model or serial number, and catalog number.

2.4 EQUIPMENT GUARDS AND ACCESS

Belts, pulleys, chains, gears, couplings, projecting setscrews, keys, and other rotating parts exposed to personnel contact shall be fully enclosed or guarded according to OSHA requirements. High temperature equipment and piping exposed to contact by personnel or where it creates a potential fire hazard shall be properly guarded or covered with insulation of a type specified.

2.5 PIPING COMPONENTS

2.5.1 Backflow Preventers

Backflow preventers shall be according to Section 15400 PLUMBING, GENERAL PURPOSE.

2.5.2 Pipe Hangers, Inserts, and Supports

Pipe hangers, inserts, and supports shall conform to MSS SP-58 and MSS SP-69.

2.5.3 Insulation

Shop and field applied insulation shall be as specified in Section 15080 THERMAL INSULATION FOR MECHANICAL SYSTEMS.

2.5.4 Condensate Drain Lines

Condensate drainage shall be copper tubing or black steel and shall be provided for each item of equipment that generates condensate as specified for drain, waste, and vent piping systems in Section 15400 PLUMBING, GENERAL PURPOSE.

2.6 ELECTRICAL WORK

Electrical motor-driven equipment specified shall be provided complete with motor, motor starter, and controls. Unless otherwise specified, electric equipment, including wiring and motor efficiencies, shall be according to Section 16415 ELECTRICAL WORK, INTERIOR. Electrical characteristics and enclosure type shall be as shown. Unless otherwise indicated, motors of 1 hp and above shall be high efficiency type. Motor starters shall be provided complete with thermal overload protection and other appurtenances necessary. Each motor shall be according to NEMA MG 1 and shall be of sufficient size to drive the equipment at the specified capacity without exceeding the nameplate rating of the motor. Manual or automatic control and protective or signal devices required for the operation specified, and any control wiring required for controls and devices, but not shown, shall be provided. Where two-speed or variable-speed motors are indicated, solid-state variable-speed controller may be provided to accomplish the same function. Solid-state variable-speed controllers shall be utilized for motors rated 10 hp or less. Adjustable frequency drives shall be used for larger motors.

2.7 CONTROLS

Controls shall be provided as specified in Section 15951 DIRECT DIGITAL CONTROL FOR HVAC.

2.8 DUCTWORK COMPONENTS

2.8.1 Metal Ductwork

All aspects of metal ductwork construction, including all fittings and components, shall comply with SMACNA HVAC Duct Const Stds unless otherwise specified. Elbows shall be radius type with a centerline radius of 1-1/2 times the width or diameter of the duct where space permits. Otherwise, elbows having a minimum radius equal to the width or diameter of the duct or square elbows with factory fabricated turning vanes may be used. Static pressure Class 1/2, 1, and 2 inch w.g. ductwork shall meet the requirements of Seal Class C. Class 3 through 10 inch shall meet the requirements of Seal Class A. Sealants shall conform to fire hazard classification specified in Section 15080 THERMAL INSULATION FOR MECHANICAL SYSTEMS. Pressure sensitive tape shall not be used as a sealant. Spiral lock seam duct, and flat oval shall be made with duct sealant and locked with not less than 3 equally spaced drive screws or other approved methods indicated in SMACNA HVAC Duct Const Stds. The sealant shall be applied to the

exposed male part of the fitting collar so that the sealer will be on the inside of the joint and fully protected by the metal of the duct fitting. One brush coat of the sealant shall be applied over the outside of the joint to at least 2 inch band width covering all screw heads and joint gap. Dents in the male portion of the slip fitting collar will not be acceptable. Outdoor air intake ducts and plenums shall be fabricated with watertight soldered or brazed joints and seams.

2.8.1.1 Transitions

Diverging air flow transitions shall be made with each side pitched out a maximum of 15 degrees, for an included angle of 30 degrees. Transitions for converging air flow shall be made with each side pitched in a maximum of 30 degrees, for an included angle of 60 degrees, or shall be as indicated. Factory-fabricated reducing fittings for systems using round duct sections when formed to the shape of the ASME short flow nozzle, need not comply with the maximum angles specified.

2.8.1.2 Insulated Nonmetallic Flexible Duct Runouts

Flexible duct runouts shall be used only where indicated. Runout length shall be as shown on the drawings, but shall in no case exceed 5 feet. Runouts shall be preinsulated, factory fabricated, and shall comply with NFPA 90A and UL 181. Either field or factory applied vapor barrier shall be provided. Where coil induction or high velocity units are supplied with vertical air inlets, a streamlined and vaned and mitered elbow transition piece shall be provided for connection to the flexible duct or hose. The last elbow to these units, other than the vertical air inlet type, shall be a die-stamped elbow and not a flexible connector. Insulated flexible connectors may be used as runouts. The insulated material and vapor barrier shall conform to the requirements of Section 15080 THERMAL INSULATION FOR MECHANICAL SYSTEMS. The insulation material surface shall not be exposed to the air stream.

2.8.1.3 General Service Duct Connectors

A flexible duct connector approximately 6 inches in width shall be provided where sheet metal connections are made to fans, fan coil units, computer room units and air handling units or where ducts of dissimilar metals are connected. For round/oval ducts, the flexible material shall be secured by stainless steel or zinc-coated, iron clinch-type draw bands. For rectangular ducts, the flexible material locked to metal collars shall be installed using normal duct construction methods. The composite connector system shall comply with UL 214 and be classified as "flame-retarded fabrics" in UL Bld Mat Dir.

2.8.2 Ductwork Accessories

2.8.2.1 Duct Access Doors

Access doors shall be provided in ductwork and plenums where indicated and at all air flow measuring primaries, automatic dampers, fire dampers, coils, thermostats, and other apparatus requiring service and inspection in the duct system, and unless otherwise shown, shall conform to SMACNA HVAC Duct Const Stds. Access doors shall be provided upstream and downstream of air flow measuring primaries and heating and cooling coils. Doors shall be minimum 15 x 18 inches, unless otherwise shown. Where duct size will not accommodate this size door, the doors shall be made as large as practicable. Doors 24 x 24 inches or larger shall be provided with

fasteners operable from both sides. Doors in insulated ducts shall be the insulated type.

2.8.2.2 Manual Balancing Dampers

Manual balancing dampers shall be furnished with accessible operating mechanisms. Where operators occur in finished portions of the building, operators shall be chromium plated with all exposed edges rounded. Manual volume control dampers shall be operated by locking-type quadrant operators. Dampers shall be 2 gauges heavier than the duct in which installed. Unless otherwise indicated, multileaf dampers shall be opposed blade type with maximum blade width of 12 inches. Access doors or panels shall be provided for all concealed damper operators and locking setscrews. Unless otherwise indicated, the locking-type quadrant operators for dampers, when installed on ducts to be thermally insulated, shall be provided with stand-off mounting brackets, bases, or adapters to provide clearance between the duct surface and the operator not less than the thickness of the insulation. Stand-off mounting items shall be integral with the operator or standard accessory of the damper manufacturer. Volume dampers shall be provided where indicated. Dampers exposed to outside air shall be of all aluminum construction.

2.8.2.3 Backdraft Dampers

Backdraft dampers shall be suitable for horizontal or vertical installation and consist of an aluminum frame with welded corners and mounting flange. Blades shall be 0.05 inch thick 60603T extruded aluminum with vinyl seals and galvanized steel blade axles. Tie bars and brackets shall be aluminum, and return spring shall be adjustable tension type.

2.8.2.4 Air Deflectors and Branch Connections

Air deflectors shall be provided at duct mounted supply outlets, at takeoff or extension collars to supply outlets, at duct branch takeoff connections, and at 90 degree elbows, as well as at locations as indicated on the drawings or otherwise specified. Conical branch connections or 45 degree entry connections may be used in lieu of deflectors or extractors for branch connections. All air deflectors, except those installed in 90 degree elbows, shall be provided with an approved means of adjustment. Adjustment shall be made from easily accessible means inside the duct or from an adjustment with sturdy lock on the face of the duct. When installed on ducts to be thermally insulated, external adjustments shall be provided with stand-off mounting brackets, integral with the adjustment device, to provide clearance between the duct surface and the adjustment device not less than the thickness of the thermal insulation. Air deflectors shall be factory-fabricated units consisting of curved turning vanes or louver blades designed to provide uniform air distribution and change of direction with minimum turbulence or pressure loss. Air deflectors shall be factory or field assembled. Blade air deflectors, also called blade air extractors, shall be approved factory fabricated units consisting of equalizing grid and adjustable blade and lock. Adjustment shall be easily made from the face of the diffuser or by position adjustment and lock external to the duct. Stand-off brackets shall be provided on insulated ducts and are described herein. Fixed air deflectors, also called turning vanes, shall be provided in 90 degree elbows.

2.8.3 Duct Sleeves, Framed Prepared Openings, Closure Collars

2.8.3.1 Duct Sleeves

Duct sleeves shall be provided for round ducts 15 inches in diameter or less passing through floors, walls, ceilings, or roof, and installed during construction of the floor, wall, ceiling, or roof. Round ducts larger than 15 inches in diameter and square, rectangular, and oval ducts passing through floors, walls, ceilings, or roof shall be installed through framed prepared openings. The Contractor shall be responsible for the proper size and location of sleeves and prepared openings. Sleeves and framed openings are also required where grilles, registers, and diffusers are installed at the openings. Framed prepared openings shall be fabricated from 20 gauge galvanized steel, unless otherwise indicated. Where sleeves are installed in bearing walls or partitions, black steel pipe, ASTM A 53/A 53M, Schedule 20 shall be used. Sleeve shall provide 1 inch clearance between the duct and the sleeve or 1 inch clearance between the insulation and the sleeve for insulated ducts.

2.8.3.2 Framed Prepared Openings

Openings shall have 1 inch clearance between the duct and the opening or 1 inch clearance between the insulation and the opening for insulated ducts.

2.8.3.3 Closure Collars

Collars shall be fabricated of galvanized sheet metal not less than 4 inches wide, unless otherwise indicated, and shall be installed on exposed ducts on each side of walls or floors where sleeves or prepared openings are provided. Collars shall be installed tight against surfaces. Collars shall fit snugly around the duct or insulation. Sharp edges of the collar around insulated duct shall be ground smooth to preclude tearing or puncturing the insulation covering or vapor barrier. Collars for round ducts 15 inches in diameter or less shall be fabricated from 20 gauge galvanized steel. Collars for round ducts larger than 15 inches and square, and rectangular ducts shall be fabricated from 18 gauge galvanized steel. Collars shall be installed with fasteners on maximum 6 inch centers, except that not less than 4 fasteners shall be used.

2.8.4 Sound Attenuation Equipment

a. Acoustical Duct Liner:

Acoustical duct lining shall be fibrous glass designed exclusively for lining ductwork and shall conform to the requirements of ASTM C 1071, Type I and II. Liner composition may be uniform density, graduated density, or dual density, as standard with the manufacturer. Lining shall be coated, not less than 1 inch thick. Where acoustical duct liner is used, liner or combination of liner and insulation applied to the exterior of the ductwork shall be the thermal equivalent of the insulation specified in Section 15080 THERMAL INSULATION FOR MECHANICAL SYSTEMS. Duct sizes shown shall be increased to compensate for the thickness of the lining used. In lieu of sheet metal duct with field-applied acoustical lining, acoustically equivalent lengths of fibrous glass duct or factory fabricated double-walled internally insulated duct with perforated liner may be provided. Net insertion loss value, static pressure drop, and air flow velocity capacity data shall be certified by a nationally recognized independent acoustical laboratory.

2.8.5 Diffusers, Registers, and Grilles

Units shall be factory-fabricated of steel, corrosion-resistant steel, or aluminum and shall distribute the specified quantity of air evenly over space intended without causing noticeable drafts, air movement faster than 50 fpm in occupied zone, or dead spots anywhere in the conditioned area. Outlets for diffusion, spread, throw, and noise level shall be as required for specified performance. Performance shall be certified according to ASHRAE 70. Inlets and outlets shall be sound rated and certified according to ASHRAE 70. Sound power level shall be as indicated. Diffusers and registers shall be provided with volume damper with accessible operator, unless otherwise indicated; or if standard with the manufacturer, an automatically controlled device will be acceptable. Volume dampers shall be opposed blade type for all diffusers and registers, except linear slot diffusers. Linear slot diffusers shall be provided with round or elliptical balancing dampers. Where the inlet and outlet openings are located less than 7 feet above the floor, they shall be protected by a grille or screen according to NFPA 90A.

2.8.5.1 Diffusers

Diffuser types shall be as indicated. Ceiling mounted units shall be furnished with anti-smudge devices, unless the diffuser unit minimizes ceiling smudging through design features. Diffusers shall be provided with air deflectors of the type indicated. Air handling troffers or combination light and ceiling diffusers shall conform to the requirements of UL Elec Const Dir for the interchangeable use as cooled or heated air supply diffusers or return air units. Ceiling mounted units shall be installed with rims tight against ceiling. Sponge rubber gaskets shall be provided between ceiling and surface mounted diffusers for air leakage control. Suitable trim shall be provided for flush mounted diffusers. Duct collar connecting the duct to diffuser shall be airtight and shall not interfere with volume controller.

2.8.5.2 Registers and Grilles

Units shall be four-way directional-control type, except that return and exhaust registers may be fixed horizontal or vertical louver type similar in appearance to the supply register face. Registers shall be provided with sponge-rubber gasket between flanges and wall or ceiling. Wall supply registers shall be installed at least 6 inches below the ceiling unless otherwise indicated. Four-way directional control may be achieved by a grille face which can be rotated in 4 positions or by adjustment of horizontal and vertical vanes. Grilles shall be as specified for registers, without volume control damper.

2.8.6 Louvers

Louvers for installation in exterior walls which are associated with the air supply and distribution system shall be as specified in Section 10200 ARCHITECTURAL LOUVERS.

2.8.7 Bird Screens and Frames

Bird screens shall conform to ASTM E 437, No. 2 mesh, aluminum or stainless steel. Aluminum screens shall be rated "medium-light". Stainless steel screens shall be rated "light". Frames shall be removable type, or stainless steel or extruded aluminum.

2.9 AIR SYSTEMS EQUIPMENT

2.9.1 Fans

Fans shall be tested and rated according to AMCA 210. Fans may be connected to the motors either directly or indirectly with V-belt drive. V-belt drives shall be designed for not less than 150 percent of the connected driving capacity. Motor sheaves shall be variable pitch for 15 hp and below and fixed pitch as defined by ARI Guideline D. Variable pitch sheaves shall be selected to drive the fan at a speed which will produce the specified capacity when set at the approximate midpoint of the sheave adjustment. When fixed pitch sheaves are furnished, a replaceable sheave shall be provided when needed to achieve system air balance. Motors for V-belt drives shall be provided with adjustable rails or bases. Removable metal guards shall be provided for all exposed V-belt drives, and speed-test openings shall be provided at the center of all rotating shafts. Fans shall be provided with personnel screens or guards on both suction and supply ends, except that the screens need not be provided, unless otherwise indicated, where ducts are connected to the fan. Fan and motor assemblies shall be provided with vibration-isolation supports or mountings as indicated. Vibration-isolation units shall be standard products with published loading ratings. Each fan shall be selected to produce the capacity required at the fan static pressure indicated. Sound power level shall be as indicated. The sound power level values shall be obtained according to AMCA 300. Standard AMCA arrangement, rotation, and discharge shall be as indicated.

2.9.1.1 In-Line Centrifugal Fans

In-line fans shall have centrifugal backward inclined blades, stationary discharge conversion vanes, internal and external belt guards, and adjustable motor mounts. Fans shall be mounted in a welded tubular casing. Air shall enter and leave the fan axially. Inlets shall be streamlined with conversion vanes to eliminate turbulence and provide smooth discharge air flow. Fan bearings and drive shafts shall be enclosed and isolated from the air stream. Fan bearings shall be sealed against dust and dirt and shall be permanently lubricated, and shall be precision self aligning ball or roller type. Bearing life shall be L50 rated at not less than 200,000 hours as defined by AFBMA Std 9 and AFBMA Std 11. Motors shall have open dripproof enclosure unless otherwise indicated.

2.9.1.2 Centrifugal Type Power Roof Ventilators

Fan shall be V-belt driven with backward inclined, non-overloading wheel. Motor compartment housing shall be hinged or removable and weatherproof, constructed of heavy gauge aluminum. Fan shall be provided with birdscreen, disconnect switch, and roof curb. Backdraft or motorized damper shall be furnished as indicated on the fan schedule. Motors enclosure shall be dripproof type. Grease-laden kitchen exhaust fan EF-K4 shall be centrifugal type according to UL 705 and fitted with V-belt drive, round hood, and windband upblast discharge configuration, integral residue trough and collection device, motor and power transmission components located in outside positively air ventilated compartment. Lubricated bearings shall be provided.

2.9.2 Kitchen Hood Make-Up Air Unit

Heater shall be equipped for and adjusted to burn natural gas. Heater shall be provided with a gas pressure regulator that will satisfactorily limit the main gas burner supply pressure. Heater shall have an

intermittent or interrupted electrically ignited pilot or a direct electric ignition system. Safety controls shall conform to the ANSI standard specified for the heater. Mounting brackets and hardware shall be furnished by the heater manufacturer and shall be factory finished to match the supported equipment. Seismic details shall be in accordance with Sections 13080 SEISMIC PROTECTION FOR MISCELLANEOUS EQUIPMENT and 15070 SEISMIC PROTECTION FOR MECHANICAL EQUIPMENT.

Heater shall be in accordance with ANSI Z83.4. Direct fired make-up air heaters use outside air directly ducted to the heater. The products of combustion generated by the heater are released into the outside air stream being heated. Heaters shall be equipped with motorized inlet dampers, 2" washable aluminum air filters and galvanized weatherhood with bird screen. Gas control valve shall be modulating type. Maximum air temperature rise during minimum burner fire shall be 7 degrees F. Fan shall be single-speed. Outdoor heaters shall be weatherized and shall have manufacturer's standard exterior finish for outdoor units. Motorized inlet dampers shall be closed when the unit is shut down. Dampers shall be interlocked to prevent burner operation when dampers are closed. Heaters shall be provided with a discharge air thermostat, a low limit air stream thermostat, and an ambient air thermostat. The discharge air thermostat shall control the gas control valve. The low limit air stream thermostat shall shut down the entire unit if the discharge air temperature drops below the discharge thermostat setting. The ambient air thermostat shall shut down the burner if the outside air exceeds the discharge thermostat setting.

2.9.3 Air Filters

Air filters shall be listed according to requirements of UL 900, except high efficiency particulate air filters of 99.97 percent efficiency by the DOP Test method shall be as listed under the Label Service and shall meet the requirements of UL 586.

2.9.3.1 Extended Surface Pleated Panel Filters

Filters shall be 2 inch depth, sectional, disposable type of the size indicated and shall have an average efficiency of 25 to 30 percent and an average arrestance of 90% when tested according to ASHRAE 52.1. Initial resistance at 500 feet per minute shall not exceed 0.30 inches water gauge. Filters shall be UL Class 2. Media shall be nonwoven cotton and synthetic fiber mat. A wire support grid bonded to the media shall be attached to a moisture resistant fiberboard frame. All four edges of the filter media shall be bonded to the inside of the frame to prevent air bypass and increase rigidity.

2.9.3.2 Holding Frames (General)

Frames shall be fabricated from not lighter than 16 gauge sheet steel with rust-inhibitor coating. Each holding frame shall be equipped with suitable filter holding devices. Holding frame seats shall be gasketed. All joints shall be airtight.

2.9.3.3 Filter Gauges

Filter gauges shall be dial type, diaphragm actuated draft and shall be provided for all filter stations, including those filters which are furnished as integral parts of factory fabricated air handling units. Gauges shall be at least 3-7/8 inches in diameter, shall have white dials

with black figures, and shall be graduated in 0.01 inch of water and shall have a minimum range of 1 inch beyond the specified final resistance for the filter bank on which each gauge is applied. Each gauge shall incorporate a screw operated zero adjustment and shall be furnished complete with two static pressure tips with integral compression fittings, two molded plastic vent valves, two 5 foot minimum lengths of 1/4 inch diameter aluminum tubing, and all hardware and accessories for gauge mounting.

2.10 VENT PIPING

Vent piping shall conform to the requirements of NFPA 54. Plastic material polyetherimide (PEI) and polyethersulfone (PES) are forbidden to be used for vent piping of combustion gases.

2.11 INSULATION

Insulation for piping and equipment and application shall be in accordance with Section 15080 THERMAL INSULATION FOR MECHANICAL SYSTEMS.

2.12 FACTORY PAINTING

Units which are not of galvanized construction according to ASTM A 123/A 123M or ASTM A 924/A 924M shall be factory painted with a corrosion resisting paint finish. Internal and external ferrous metal surfaces shall be cleaned, phosphatized and coated with a paint finish which has been tested according to ASTM B 117, ASTM D 1654, and ASTM D 3359. Evidence of satisfactory paint performance for a minimum of 125 hours for units to be installed indoors and 500 hours for units to be installed outdoors shall be submitted. Rating of failure at the scribe mark shall be not less than 6, average creepage not greater than 1/8 inch. Rating of the inscribed area shall not be less than 10, no failure. On units constructed of galvanized steel which have been welded, exterior surfaces of welds or welds that have burned through from the interior shall receive a final shop docket of zinc-rich protective paint according to ASTM D 520 Type I.

PART 3 EXECUTION

3.1 INSTALLATION

Work shall be installed as shown and according to the manufacturer's diagrams and recommendations and the listing agency, except as otherwise specified.

3.1.1 Condensate Drain Lines

Water seals shall be provided in the condensate drain from all computer room units and package rooftop units with cooling coils. The depth of each seal shall be 2 inches plus the number of inches, measured in water gauge, of the total static pressure rating of the unit to which the drain is connected. Water seals shall be constructed of 2 tees and an appropriate U-bend with the open end of each tee plugged. Pipe cap or plug cleanouts shall be provided where indicated. Drains indicated to connect to the sanitary waste system shall be connected by an indirect waste fitting. Air conditioner drain lines shall be insulated as specified in Section 15080 THERMAL INSULATION FOR MECHANICAL SYSTEMS.

3.1.2 Air Vents and Drains

3.1.2.1 Vents

Air vents shall be provided at high points, on water coils, and where indicated to ensure adequate venting of the piping system.

3.1.2.2 Drains

Drains shall be provided at low points and where indicated to ensure complete drainage of the piping. Drains shall be accessible, and shall consist of nipples and caps or plugged tees unless otherwise indicated.

3.1.3 Heating Equipment

Heaters shall be installed with clearance to combustibles complying with minimum distances as determined by IAS Directory, UL Gas & Oil Dir and as indicated on each heater approval and listing plate. Heaters shall be independently supported from the building structure as indicated and shall not rely on support from suspended ceiling systems.

3.1.4 Vents

Vent dampers, piping and structural penetrations shall be located as indicated. Vent damper installation shall conform to ANSI Z21.66. Vent pipes, where not connected to a masonry chimney conforming to NFPA 211, shall extend through the roof or an outside wall and shall terminate, in compliance with NFPA 54. Vents passing through waterproof membranes shall be provided with the necessary flashings to obtain waterproof installations.

3.1.5 Gas Piping

Gas piping shall be connected as indicated and shall comply with the applicable requirements at Section 15190 GAS PIPING SYSTEMS.

3.1.6 Equipment and Installation

Frames and supports shall be provided for tanks, compressors, pumps, valves, rooftop units, fans, coils, dampers, and other similar items requiring supports. Package rooftop units shall be pad mounted outdoors, as indicated. The method of anchoring and fastening shall be as detailed. Floor-mounted equipment, unless otherwise indicated, shall be set on not less than 6 inch concrete pads or curbs doweled in place. Concrete foundations for circulating pumps shall be heavy enough to minimize the intensity of the vibrations transmitted to the piping and the surrounding structure, as recommended in writing by the pump manufacturer. In lieu of a concrete pad foundation, a concrete pedestal block with isolators placed between the pedestal block and the floor may be provided. The concrete foundation or concrete pedestal block shall be of a mass not less than three times the weight of the components to be supported. Lines connected to the pump mounted on pedestal blocks shall be provided with flexible connectors. Foundation drawings, bolt-setting information, and foundation bolts shall be furnished prior to concrete foundation construction for all equipment indicated or required to have concrete foundations. Concrete for foundations shall be as specified in Section 03300 CAST-IN-PLACE STRUCTURAL CONCRETE.

3.1.7 Access Panels

Access panels shall be provided for concealed valves, vents, controls, dampers, and items requiring inspection or maintenance. Access panels

shall be of sufficient size and located so that the concealed items may be serviced and maintained or completely removed and replaced. Access panels shall be as specified in Section 05500 MISCELLANEOUS METALS.

3.1.8 Flexible Connectors

Pre-insulated flexible connectors and flexible duct shall be attached to other components in accordance with the latest printed instructions of the manufacturer to ensure a vapor tight joint. Hangers, when required to suspend the connectors, shall be of the type recommended by the connector or duct manufacturer and shall be provided at the intervals recommended.

3.1.9 Sleeved and Framed Openings

Space between the sleeved or framed opening and the duct or the duct insulation shall be packed as specified in Section 07840 FIRESTOPPING for fire rated penetrations. For non-fire rated penetrations, the space shall be packed as specified in Section 07900 JOINT SEALING.

3.1.10 Metal Ductwork

Installation shall be according to SMACNA HVAC Duct Const Stds unless otherwise indicated. Duct supports for sheet metal ductwork shall be according to SMACNA HVAC Duct Const Stds, unless otherwise specified. Friction beam clamps indicated in SMACNA HVAC Duct Const Stds shall not be used. Risers on high velocity ducts shall be anchored in the center of the vertical run to allow ends of riser to move due to thermal expansion. Supports on the risers shall allow free vertical movement of the duct. Supports shall be attached only to structural framing members and concrete slabs. Supports shall not be anchored to metal decking unless a means is provided and approved for preventing the anchor from puncturing the metal decking. Where supports are required between structural framing members, suitable intermediate metal framing shall be provided. Where C-clamps are used, retainer clips shall be provided.

3.1.11 Kitchen Exhaust Ductwork

3.1.11.1 Ducts Conveying Smoke and Grease Laden Vapors

Ducts conveying smoke and grease laden vapors shall conform to requirements of NFPA 96. Seams, joints, penetrations, and duct-to-hood collar connections shall have a liquid tight continuous external weld. Duct material shall be 18 gauge, Type 304L or 316L, stainless steel. Duct construction shall include external perimeter angle sized in accordance with SMACNA HVAC Duct Const Stds, except welded joint reinforcement shall be on maximum of 24 inch centers; continuously welded companion angle bolted flanged joints with flexible ceramic cloth gaskets where indicated; pitched to drain at low points; welded pipe coupling-plug drains at low points; welded fire protection and detergent cleaning penetration; steel framed, stud bolted, and flexible ceramic cloth gasketed cleaning access provisions where indicated. Angles, pipe couplings, frames, bolts, etc., shall be same material as that specified for the duct unless indicated otherwise.

3.1.11.2 Concealed Ducts Conveying Moisture Laden Air

Concealed ducts conveying moisture laden air from condensate hoods shall be fabricated from minimum 18 gauge, Type 300 series, stainless steel. Joints shall be continuously welded, brazed, or soldered to be liquid tight. Duct

shall be pitched to drain at points indicated. Transitions to other metals shall be liquid tight, companion angle bolted and gasketed.

3.1.12 Acoustical Duct Lining

Lining shall be applied in cut-to-size pieces attached to the interior of the duct with nonflammable fire resistant adhesive conforming to ASTM C 916, Type I, NFPA 90A, UL 723, and ASTM E 84. Top and bottom pieces shall lap the side pieces and shall be secured with welded pins, adhered clips of metal, nylon, or high impact plastic, and speed washers or welding cup-head pins installed according to SMACNA HVAC Duct Const Stds. Welded pins, cup-head pins, or adhered clips shall not distort the duct, burn through, nor mar the finish or the surface of the duct. Pins and washers shall be flush with the surfaces of the duct liner and all breaks and punctures of the duct liner coating shall be sealed with the nonflammable, fire resistant adhesive. Exposed edges of the liner at the duct ends and at other joints where the lining will be subject to erosion shall be coated with a heavy brush coat of the nonflammable, fire resistant adhesive, to prevent delamination of glass fibers. Duct liner may be applied to flat sheet metal prior to forming duct through the sheet metal brake. Lining at the top and bottom surfaces of the duct shall be additionally secured by welded pins or adhered clips as specified for cut-to-size pieces. Other methods indicated in SMACNA HVAC Duct Const Stds to obtain proper installation of duct liners in sheet metal ducts, including adhesives and fasteners, will be acceptable.

The following ducts shall be insulated with a 1-inch thick interior duct liner unless otherwise indicated:

a. Air conditioning system supply and return.

b. Computer room unit supply and return ducts.

c. Outside air ducts (up to the point where outdoor air reaches the conditioning unit).

3.1.13 Dust Control

To prevent the accumulation of dust, debris and foreign material during construction, temporary dust control protection shall be provided. The distribution system (supply and return) shall be protected with temporary seal-offs at all inlets and outlets at the end of each day's work. Temporary protection shall remain in place until system is ready for startup.

3.1.14 Insulation

Thickness and application of insulation materials for ductwork, piping, and equipment shall be according to Section 15080 THERMAL INSULATION FOR MECHANICAL SYSTEMS. Outdoor air intake ducts and plenums shall have the option of being externally insulated up to the point where the outdoor air reaches the conditioning unit.

3.1.15 Duct Test Holes

Holes with closures or threaded holes with plugs shall be provided in ducts and plenums as indicated or where necessary for the use of pitot tube in balancing the air system. Extensions, complete with cap or plug, shall be provided where the ducts are insulated.

3.1.16 Power Transmission Components Adjustment

V-belts and sheaves shall be tested for proper alignment and tension prior to operation and after 72 hours of operation at final speed. Belts on drive side shall be uniformly loaded, not bouncing. Alignment of direct driven couplings shall be to within 50 percent of manufacturer's maximum allowable range of misalignment.

3.2 FIELD PAINTING AND COLOR CODE MARKING

Finish painting of items only primed at the factory, surfaces not specifically noted otherwise, and color code marking for piping shall be as specified in Section 09900 PAINTING, GENERAL.

3.3 DUCTWORK LEAK TEST

Ductwork leak test shall be performed for the entire air distribution and exhaust system, including fans, coils, filters, etc. Test procedure, apparatus, and report shall conform to SMACNA Leakage Test Mnl. The maximum allowable leakage rate is 2% for round and 5% for rectangular duct work. Ductwork leak test shall be completed with satisfactory results prior to applying insulation to ductwork exterior.

3.4 CLEANING AND ADJUSTING

Pipes shall be cleaned free of scale and thoroughly flushed of foreign matter. A temporary bypass shall be provided for water coils to prevent flushing water from passing through coils. Strainers and valves shall be thoroughly cleaned. Prior to testing and balancing, air shall be removed from water systems by operating the air vents. Temporary measures, such as piping the overflow from vents to a collecting vessel shall be taken to avoid water damage during the venting process. Air vents shall be plugged or capped after the system has been vented. Inside of air terminal units, ducts, plenums, and casing shall be thoroughly cleaned of debris and blown free of small particles of rubbish and dust and then shall be vacuum cleaned before installing outlet faces. Equipment shall be wiped clean, with traces of oil, dust, dirt, or paint spots removed. Temporary filters shall be provided prior to startup of all fans that are operated during construction, and new filters shall be installed after all construction dirt has been removed from the building, and the ducts, plenums, casings, and other items specified have been vacuum cleaned. System shall be maintained in this clean condition until final acceptance. Bearings shall be properly lubricated with oil or grease as recommended by the manufacturer. Belts shall be tightened to proper tension. Control valves and other miscellaneous equipment requiring adjustment shall be adjusted to setting indicated or directed. Fans shall be adjusted to the speed indicated by the manufacturer to meet specified conditions.

3.5 TESTING, ADJUSTING, AND BALANCING

Testing, adjusting, and balancing shall be as specified in Section 15990 TESTING, ADJUSTING AND BALANCING OF HVAC SYSTEMS. Testing, adjusting, and balancing shall begin only when the air supply and distribution, including controls, has been completed, with the exception of performance tests. Submit test procedures and list of projects with similar services in accordance with 1.4 SUBMITTALS.

3.6 PERFORMANCE TESTS

After testing, adjusting, and balancing has been completed as specified, each system shall be tested as a whole to see that all items perform as integral parts of the system and temperatures and conditions are evenly controlled throughout the building. Corrections and adjustments shall be made as necessary to produce the conditions indicated or specified. Capacity tests and general operating tests shall be conducted by an experienced engineer. Tests shall cover a period of not less than 5 days for each system and shall demonstrate that the entire system is functioning according to the specifications. Coincidental chart recordings shall be made at points indicated on the drawings for the duration of the time period and shall record the temperature at space thermostats or space sensors, the humidity at space humidistats or space sensors and the ambient temperature and humidity in a shaded and weather protected area.

3.7 FIELD TRAINING

The Contractor shall conduct a training course for operating and maintenance personnel as designated by the Contracting Officer. Training shall be provided for a period of 8 hours of normal working time and shall start after the system is functionally complete but prior to the performance tests. The field instruction shall cover all of the items contained in the approved Operating and Maintenance Instructions.

-- End of Section --

SECTION 15951

DIRECT DIGITAL CONTROL FOR HVAC
06/98

PART 1 GENERAL

1.1 REFERENCES

The publications listed below form a part of this specification to the extent referenced. The publications are referred to in the text by basic designation only.

AIR MOVEMENT AND CONTROL ASSOCIATION (AMCA)

AMCA Std 500	(11989; Rev994) Test Methods for Louvers, Dampers and Shutters

AMERICAN SOCIETY FOR TESTING AND MATERIALS (ASTM)

ASTM A 269	(1996) Seamless and Welded Austenitic Stainless Steel Tubing for General Service
ASTM B 88	(1996) Seamless Copper Water Tube
ASTM B 88M	(1996) Seamless Copper Water Tube (Metric)
ASTM D 635	(1997) Rate of Burning and/or Extent and Time of Burning of Self-Supporting Plastics in a Horizontal Position
ASTM D 1693	(1997a) Environmental Stress-Cracking of Ethylene Plastics

ASME INTERNATIONAL (ASME)

ASME B40.1	(1991) Gauges - Pressure Indicating Dial Type - Elastic Element

ELECTRONIC INDUSTRIES ALLIANCE (EIA)

EIA ANSI/EIA/TIA 232-F	(1991) Interface Between Data Technical Equipment and Data Circuit-Terminating Equipment Employing Serial Binary Data Interchange

INSTITUTE OF ELECTRICAL AND ELECTRONICS ENGINEERS (IEEE)

IEEE C62.41	(1991; R 1995) Surge Voltages in Low-Voltage AC Power Circuits
IEEE Std 142	(1991) IEEE Recommended Practice for Grounding of Industrial and Commercial Power Systems

NATIONAL ELECTRICAL MANUFACTURERS ASSOCIATION (NEMA)

NEMA 250	(1991) Enclosures for Electrical Equipment (1000 Volts Maximum)
NEMA ICS 1	(1993) Industrial Control and Systems
NEMA ST 1	(1988) Specialty Transformers (Except General-Purpose Type)

NATIONAL FIRE PROTECTION ASSOCIATION (NFPA)

NFPA 70	(1999) National Electrical Code
NFPA 90A	(1996) Installation of Air Conditioning and Ventilating Systems

UNDERWRITERS LABORATORIES (UL)

UL 94	(1996; Rev thru Jul 1998) Tests for Flammability of Plastic Materials for Parts in Devices and Appliances
UL 268A	(1998) Smoke Detectors for Duct Application
UL 508	(1993; Rev thru Oct 1997) Industrial Control Equipment

1.2 GENERAL REQUIREMENTS

The direct digital control (DDC) shall be a complete system suitable for the heating, ventilating and air-conditioning (HVAC) system. DDC system shall not utilize pneumatic components. HVAC control shall be accomplished using LonMark based devices where the application has a LonMark profile defined. Where LonMark devices are not available for a particular application, devices based on LonMark shall be acceptable. For each LonWorks device that does not have LonMark certification, the device supplier must provide an XIF file for the device. Publicly available specifications for the Applications Programming Interface (API) must be provided for each LonWorks/LonMark controller defining the programming or setup of each device. All programming, documentation and programming tools necessary to set up and configure the supplied devices per the specified sequences of operations shall be provided.

1.2.1 Nameplates, Lens Caps, and Tags

Nameplates and lens caps bearing legends as shown and tags bearing device-unique identifiers as shown shall have engraved or stamped characters. A plastic or metal tag shall be mechanically attached directly to each device or attached by a metal chain or wire. Each airflow measurement station shall have a tag showing flow rate range for signal output range, duct size, and identifier as shown.

1.2.2 Verification of Dimensions

After becoming familiar with all details of the work, the Contractor shall verify all dimensions in the field, and shall advise the Contracting Officer of any discrepancy before performing any work.

1.2.3 Drawings

Because of the small scale of the drawings, it is not possible to indicate all offsets, fittings, and accessories that may be required. The Contractor shall carefully investigate the mechanical, electrical, and finish conditions that could affect the work to be performed, shall arrange such work accordingly, and shall furnish all work necessary to meet such conditions.

1.2.4 Power-Line Surge Protection

Equipment connected to ac circuits shall be protected from power-line surges. Equipment protection shall meet the requirements of IEEE C62.41. Fuses shall not be used for surge protection.

1.2.5 Surge Protection for Transmitter and Control Wiring

DDC system control-panel equipment shall be protected against surges induced on control and transmitter wiring installed outside and as shown. The equipment protection shall be tested in the normal mode and in the common mode, using the following two waveforms:

a. A 10-microsecond by 1,000-microsecond waveform with a peak voltage of 1,500 volts and a peak current of 60 amperes.

b. An eight microsecond by 20-microsecond waveform with a peak voltage of 1,000 volts and a peak current of 500 amperes.

1.2.6 System Overall Reliability Requirement

The system shall be configured and installed to yield a mean time between failure (MTBF) of at least 40,000 hours. Each DDC controller shall be designed, configured, installed and programmed to provide for stand alone operation with minimal performance degradation on failure of other system components to which it is connected or with which it communicates.

1.2.7 DDC System Network Accessibility

Where the systems to be controlled by the DDC system are located in multiple mechanical rooms, each mechanical room shall have at least one communication port for the portable workstation/tester. DDC controllers shall be located in the same room as the equipment being controlled or in an adjacent space which has direct access to the equipment room.

1.2.8 System Accuracy and Display

The system shall maintain an end-to-end accuracy for one year from sensor to operator's console display for the applications specified and shall display the value as specified. Each temperature shall be displayed and printed to nearest 0.1 degree F.

1.2.8.1 Space Temperature

Space temperature with a range of 50 to 85 degrees F plus or minus 0.75 degree F for conditioned space; 30 to 130 degrees F plus or minus 1 degree F for unconditioned space.

1.2.8.2 Duct Temperature

Duct temperature with a range of 40 to 140 degrees F plus or minus 2 degrees F.

1.2.8.3 Outside Air Temperature

Outside air (OA) temperature with a range of minus 30 to plus 130 degrees F plus or minus 2 degrees F; with a subrange of 30 to 100 degrees F plus or minus 1 degree F.

1.2.8.4 High Temperature

High temperature with a range of 200 to 500 degrees F plus or minus 2.0 degrees F.

1.2.8.5 Relative Humidity

Relative humidity, within a range of 20 to 80 percent, plus or minus 2.0 percent of range (display and print to nearest 1.0 percent).

1.2.8.6 Pressure

Pressure with a range for the specific application plus or minus 2.0 percent of range (display and print to nearest psi.)

1.2.8.7 Flow

Flow with a range for the specific application plus or minus 3.0 percent of range, and flows for the purpose of thermal calculations to plus or minus 2.0 percent of actual flow (display and print to nearest unit, such as gallons per minute).

1.2.8.8 KWh and kW Demand

KWh and kW demand with a range for the specific application plus or minus 1.0 percent of reading (display and print to nearest kWh or kW).

1.2.8.9 Analog Value Input

An analog value input to the system's equipment via an AI with a maximum error of 0.50 percent of range, not including the sensor or transmitter error. This accuracy shall be maintained over the specified environmental conditions.

1.3 SUBMITTALS

Government approval is required for submittals with a "G" designation; submittals not having a "G" designation are for information only. When used, a designation following the "G" designation identifies the office that will review the submittal for the Government. The following shall be submitted in accordance with Section 01330 SUBMITTAL PROCEDURES:

SD-02 Shop Drawings

HVAC Control System; G

Drawings shall be on 34 by 22 inch sheets in the form and arrangement shown. The drawings shall use the same abbreviations, symbols, nomenclature and identifiers shown. Each control system element on a drawing shall have a unique identifier as shown. The HVAC Control System Drawings shall be delivered together as a complete submittal. Deviations must be approved by the

Contracting Officer. Drawings shall be submitted along with Submittal SD-01, Data.

a. HVAC Control System Drawings shall include the following:

Sheet One: Drawing Index, HVAC Control System Legend.

Sheet Two: Damper Schedule.

Sheet Three: Control System Schematic and Equipment Schedule.

Sheet Four: Sequence of Operation and Data Terminal Strip Layout.

Sheet Five: Control Loop Wiring Diagrams.

Sheet Six: Motor Starter and Relay Wiring Diagram.

Sheet Seven: Communication Network and Block Diagram.

Sheet Eight: DDC Panel Installation and Block Diagram.

(Repeat Sheets Three through Eight for each AHU System.)

b. The HVAC Control System Drawing Index shall show the name and number of the building, military site, State or other similar designation, and Country. The Drawing Index shall list HVAC Control System Drawings, including the drawing number, sheet number, drawing title, and computer filename when used. The HVAC Control System Legend shall show generic symbols and the name of devices shown on the HVAC Control System Drawings.

c. The valve schedule shall include each valve's unique identifier, size, flow coefficient Cv, pressure drop at specified flow rate, spring range, positive positioner range, actuator size, close-off pressure data, dimensions, and access and clearance requirements data.

d. The damper schedule shall contain each damper's and each actuator's identifier, nominal and actual sizes, orientation of axis and frame, direction of blade rotation, spring ranges, operation rate, positive positioner ranges, locations of actuators and damper end switches, arrangement of sections in multi-section dampers, and methods of connecting dampers, actuators, and linkages. The Damper Schedule shall include the maximum leakage rate at the operating static-pressure differential. The Damper Schedule shall contain actuator selection data supported by calculations of the torque required to move and seal the dampers, access and clearance requirements. Damper schedules may be submitted in advance but shall be included in the complete submittal.

e. The HVAC control system schematics shall be in the form shown, and shall show all control and mechanical devices associated with the HVAC system. A system schematic drawing shall be submitted for each HVAC system.

f. The HVAC control system equipment Schedule shall be in the form shown. All devices shown on the drawings having unique

identifiers shall be referenced in the equipment schedule. Information to be included in the equipment schedule shall be the control loop, device unique identifier, device function, setpoint, input range, and additional important parameters (i.e., output range). An equipment schedule shall be submitted for each HVAC system.

g. The HVAC control system sequence of operation shall reflect the language and format of this specification, and shall refer to the devices by their unique identifiers as shown. No operational deviations from specified sequences will be permitted without prior written approval of the Contracting Officer. Sequences of operation shall be submitted for each HVAC control system including each type of terminal unit control system.

h. The HVAC control system wiring diagrams shall be functional wiring diagrams which show the interconnection of conductors and cables to HVAC control panel terminal blocks and to the identified terminals of devices, starters and package equipment. The wiring diagrams shall show necessary jumpers and ground connections. The wiring diagrams shall show the labels of all conductors. Sources of power required for HVAC control systems and for packaged equipment control systems shall be identified back to the panel board circuit breaker number, HVAC system control panel, magnetic starter, or packaged equipment control circuit. Each power supply and transformer not integral to a controller, starter, or packaged equipment shall be shown. The connected volt-ampere load and the power supply volt-ampere rating shall be shown. Wiring diagrams shall be submitted for each HVAC control system.

SD-03 Product Data

Service Organizations; G

Six copies of a list of service organizations qualified to service the HVAC control system. The list shall include the service organization name, address, technical point of contact and telephone number, and contractual point of contact and telephone number.

Equipment Compliance Booklet; G

The HVAC Control System Equipment Compliance Booklet (ECB) shall be in booklet form and indexed, with numbered tabs separating the information on each device. It shall consist of, but not be limited to, data sheets and catalog cuts which document compliance of all devices and components with the specifications. The ECB shall be indexed in alphabetical order by the unique identifiers. Devices and components which do not have unique identifiers shall follow the devices and components with unique identifiers and shall be indexed in alphabetical order according to their functional name. The ECB shall include a Bill of Materials for each HVAC Control System. The Bill of Materials shall function as the Table of Contents for the ECB and shall include the device's unique identifier, device function, manufacturer, model/part/catalog number used for ordering, and tab number where the device information is located in the ECB. The ECB shall be submitted along with Submittal SD-04, Drawings.

Commissioning Procedures; G

Six copies of the HVAC control system commissioning procedures, in booklet form and indexed, 60 days prior to the scheduled start of commissioning. Commissioning procedures shall be provided for each HVAC control system, and for each type of terminal unit control system. The Commissioning procedures shall reflect the format and language of this specification, and refer to devices by their unique identifiers as shown. The Commissioning procedures shall be specific for each HVAC system, and shall give detailed step-by-step procedures for commissioning of the system.

a. The Commissioning procedures shall include detailed, product specific set-up procedures, configuration procedures, adjustment procedures, and calibration procedures for each device. Where the detailed product specific commissioning procedures are included in manufacturer supplied manuals, reference may be made in the HVAC control system commissioning procedures to the manuals.

b. An HVAC control system commissioning procedures equipment list shall be included that lists the equipment to be used to accomplish commissioning. The list shall include manufacturer name, model number, equipment function, the date of the latest calibration, and the results of the latest calibration.

Performance Verification Test Procedures; G

Six copies of the HVAC Control System Performance Verification Test Procedures, in booklet form and indexed, 60 days before the Contractor's scheduled test dates. The performance verification test procedures shall refer to the devices by their unique identifiers as shown, shall explain, step-by-step, the actions and expected results that will demonstrate that the HVAC control system performs in accordance with the sequences of operation, and other contract documents. An HVAC control system performance verification test equipment list shall be included that lists the equipment to be used during performance verification testing. The list shall include manufacturer name, model number, equipment function, the date of the latest calibration, and the results of the latest calibration.

Training; G

An outline for the HVAC control system training course with a proposed time schedule. Approval of the planned training schedule shall be obtained from the Government at least 60 days prior to the start of the training. Six copies of HVAC control system training course material 30 days prior to the scheduled start of the training course. The training course material shall include the operation manual, maintenance and repair manual, and paper copies of overheads used in the course.

SD-06 Test Reports

Commissioning Report; G

Six copies of the HVAC Control System Commissioning Report, in booklet form and indexed, within 30 days after completion of the system commissioning. The commissioning report shall include data

collected during the HVAC control system commissioning procedures and shall follow the format of the commissioning procedures. The commissioning report shall include all configuration checksheets with final values listed for all parameters, setpoints, P, I, D setting constants, calibration data for all devices, results of adjustments, and results of testing.

Performance Verification Test; G

Six copies of the HVAC Control System Performance Verification Test Report, in booklet form and indexed, within 30 days after completion of the test. The HVAC control system performance verification test report shall include data collected during the HVAC control system performance verification test. The original copies of all data gathered during the performance verification test shall be turned over to the Government after Government approval of the test results.

SD-10 Operation and Maintenance Data

Operations and maintenance data shall be provided for all equipment, components and items of work specified herein where standard data is routinely and commercially available by the manufacturer. Submit in accordance with Section 01781 OPERATIONS AND MAINTENANCE DATA.

1.4 DELIVERY AND STORAGE

Products shall be stored with protection from the weather, humidity and temperature variations, dirt and dust, and other contaminants, within the storage condition limits published by the equipment manufacturer. Dampers shall be stored so that seal integrity, blade alignment and frame alignment are maintained.

1.5 OPERATION MANUAL

An HVAC control system operation manual in indexed booklet form shall be provided for each HVAC control system. The operation manual shall include the HVAC control system sequence of operation, and procedures for the HVAC system start-up, operation and shut-down. The operation manual shall include as-built HVAC control system detail drawings. The operation manual shall include the as-built configuration checksheets, the procedures for changing HVAC control system setpoints, and the procedures for placing HVAC system controllers in the manual control mode.

a. The procedures for changing HVAC control system setpoints shall describe the step-by-step procedures required to change the process variable setpoints, the alarm setpoints, the bias settings, and setpoint reset schedules.

b. The procedures for placing HVAC system controllers in the manual control mode shall describe step-by-step procedures required to obtain manual control of each controlled device and to manually adjust their positions.

1.6 MAINTENANCE AND REPAIR MANUAL

An HVAC control system maintenance and repair manual in indexed booklet form in hardback binders shall be provided for each HVAC control system.

The maintenance and repair manual shall include the routine maintenance checklist, a recommended repair methods list, a list of recommended maintenance and repair tools, the qualified list of service organizations, the as-built commissioning procedures and report, the as-built performance verification test procedures and report, and the as-built equipment data booklet.

a. The routine maintenance checklist shall be arranged in a columnar format. The first column shall list all devices listed in the equipment compliance booklet, the second column shall state the maintenance activity or state no maintenance required, the third column shall state the frequency of the maintenance activity, and the fourth column for additional comments or reference.

b. The recommended repair methods list shall be arranged in a columnar format and shall list all devices in the equipment data compliance booklet and state the guidance on recommended repair methods, either field repair, factory repair, or whole-item replacement.

c. The as-built equipment data booklet shall include the equipment compliance booklet and manufacturer supplied user manuals and information.

d. If the operation manual and the maintenance and repair manual are provided in a common volume, they shall be clearly differentiated and separately indexed.

1.7 MAINTENANCE AND SERVICE

Services, materials and equipment shall be provided as necessary to maintain the entire system in an operational state as specified for a period of one year after successful completion and acceptance of the Performance Verification Test. Impacts on facility operations shall be minimized.

1.7.1 Description of Work

The adjustment and repair of the system shall include the manufacturer's required adjustments of computer equipment, software updates, transmission equipment and instrumentation and control devices.

1.7.2 Personnel

Service personnel shall be qualified to accomplish work promptly and satisfactorily. The Government shall be advised in writing of the name of the designated service representative, and of any changes in personnel.

1.7.3 Scheduled Inspections

Two inspections shall be performed at six-month intervals (or less if required by the manufacturer), and all work required shall be performed. Inspections shall be scheduled in June and December. These inspections shall include:

a. Visual checks and operational tests of equipment.

b. Fan checks and filter changes for control system equipment.

c. Clean control system equipment including interior and exterior surfaces.

d. Check and calibrate each field device. Check and calibrate 50 percent of the total analog points during the first inspection. Check and calibrate the remaining 50 percent of the analog points during the second major inspection. Certify analog test instrumentation accuracy to be twice that of the device being calibrated. Randomly check at least 25 percent of all digital points for proper operation during the first inspection. Randomly check at least 25 percent of the remaining digital points during the second inspection.

e. Run system software diagnostics and correct diagnosed problems.

f. Resolve any previous outstanding problems.

1.7.4 Scheduled Work

This work shall be performed during regular working hours, Monday through Friday, excluding legal holidays.

1.7.5 Emergency Service

The Government will initiate service calls when the system is not functioning properly. Qualified personnel shall be available to provide service to the system. A telephone number where the service supervisor can be reached at all times shall be provided. Service personnel shall be at the site within 24 hours after receiving a request for service. The control system shall be restored to proper operating condition within three calendar days after receiving a request for service.

1.7.6 Operation

Scheduled adjustments and repairs shall include verification of the control system operation as demonstrated by the applicable tests of the performance verification test.

1.7.7 Records and Logs

Dated records and logs shall be kept of each task, with cumulative records for each major component, and for the complete system chronologically. A continuous log shall be maintained for all devices. The log shall contain initial analog span and zero calibration values and digital points. Complete logs shall be kept and shall be available for inspection onsite, demonstrating that planned and systematic adjustments and repairs have been accomplished for the control system.

1.7.8 Work Requests

Each service call request shall be recorded as received and shall include the serial number identifying the component involved, its location, date and time the call was received, nature of trouble, names of the service personnel assigned to the task, instructions describing what has to be done, the amount and nature of the materials to be used, the time and date work started, and the time and date of completion. A record of the work performed shall be submitted within 5 days after work is accomplished.

1.7.9 System Modifications

Recommendations for system modification shall be submitted in writing. No system modifications, including operating parameters and control settings,

shall be made without prior approval of the Government. Any modifications made to the system shall be incorporated into the operations and maintenance manuals, and other documentation affected.

1.7.10 Software

Updates to the software shall be provided for system, operating and application software, and operation in the system shall be verified. Updates shall be incorporated into operations and maintenance manuals, and software documentation. There shall be at least one scheduled update near the end of the first year's warranty period, at which time the latest released version of the Contractor's software shall be installed and validated.

1.8 FACTORY TESTING

The Contractor shall assemble the factory test DDC system as specified and shall perform test to demonstrate that the performance of the system satisfies the requirements of this specification. Model numbers of equipment tested shall be identical to those to be delivered to the site. Original copies of data produced, including results of each test procedure during factory testing shall be delivered to the Government at the conclusion of testing, prior to Government approval of the test. The test results documentation shall be arranged so that commands, responses, and data acquired are correlated in a manner which will allow for logical interpretation of the data.

1.8.1 Factory Test Setup

The factory test setup shall include the following:

a. Central workstation/tester.

b. Printer.

c. DDC test set.

d. Portable workstation/tester.

e. Communication links of each type and speed including MODEMs.

f. Dial-up MODEM.

g. Software.

PART 2 PRODUCTS

2.1 GENERAL EQUIPMENT REQUIREMENTS

Units of the same type of equipment shall be products of a single manufacturer. Each major component of equipment shall have the manufacturer's name and address, and the model and serial number in a conspicuous place. Materials and equipment shall be standard products of a manufacturer regularly engaged in the manufacturing of such products, which are of a similar material, design and workmanship. The standard products shall have been in a satisfactory commercial or industrial use for two years prior to use on this project. The two years' use shall include applications of equipment and materials under similar circumstances and of similar size. The two years' experience shall be satisfactorily completed

by a product which has been sold or is offered for sale on the commercial market through advertisements, manufacturers' catalogs, or brochures. Products having less than a two-year field service record will be acceptable if a certified record of satisfactory field operation, for not less than 6,000 hours exclusive of the manufacturer's factory tests, can be shown. The equipment items shall be supported by a service organization. Items of the same type and purpose shall be identical, including equipment, assemblies, parts and components. Automatic temperature controls shall be direct digital controls that will provide the required sequence of operation. No pneumatics will be allowed. The unitary local equipment controllers, intelligent sensors, and intelligent actuators shall be based upon LonMark functional profile configurations. All LonMark devices shall be integrated into the base-wide Niagara Framework EMCS, no exceptions.

2.1.1 Electrical and Electronic Devices

Electrical, electronic, and electropneumatic devices not located within a DDC panel shall have a NEMA ICS 1 enclosure in accordance with NEMA 250 unless otherwise shown.

2.1.2 Standard Signals

Except for air distribution terminal unit control equipment, the output of all analog transmitters and the analog input and output of all DDC controllers shall be 4-to-20 mAdc signals. The signal shall originate from current-sourcing devices and shall be received by current-sinking devices.

2.1.3 Ambient Temperature Limits

DDC panels shall have ambient condition ratings of 35 to 120 degrees F and 10 to 95 percent relative humidity, noncondensing. Devices installed outdoors shall operate within limit ratings of minus 35 to plus 150 degrees F. Instrumentation and control elements shall be rated for continuous operation under the ambient environmental temperature, pressure, humidity, and vibration conditions specified or normally encountered for the installed location.

2.1.4 Year 2000 Compliance

All equipment and software shall be Year 2000 compliant and shall be able to accurately process date/time data (including, but not limited to, calculating, comparing, and sequencing) from, into, and between the twentieth and twenty-first centuries, including leap year calculations, when used in accordance with the product documentation provided by the contractor, provided that all products (e.g. hardware, software, firmware) used in combination with other information technology, shall accurately process date/time data if other information technology properly exchanges date/time data with it.

2.2 TUBING

2.2.1 Copper

Copper tubing shall conform to ASTM B 88, ASTM B 88M and shall have sweat fittings and valves.

2.2.2 Stainless Steel

Stainless steel tubing shall conform to ASTM A 269 and shall have stainless

steel compression fittings.

2.2.3 Plastic

Plastic tubing shall have barbed fittings and valves. Plastic tubing shall have the burning characteristics of linear low-density polyethylene tubing, shall be self-extinguishing when tested in accordance with ASTM D 635, shall have UL 94 V-2 flammability classification, and shall withstand stress cracking when tested in accordance with ASTM D 1693. Plastic-tubing bundles shall be provided with Mylar barrier and flame-retardant polyethylene jacket.

2.3 WIRING

Control wiring for 24-volt circuits, wiring for 120-volt circuits and instrumentation cable shall meet the requirements of Section 16415 ELECTRICAL WORK, INTERIOR.

2.3.1 Terminal Blocks

Terminal blocks shall be insulated, modular, feed-through, clamp style with recessed captive screw-type clamping mechanism, shall be suitable for rail mounting, and shall have end plates and partition plates for separation or shall have enclosed sides.

2.3.2 Transformers

Step down transformers shall be utilized where control equipment operates at lower than line circuit voltage. Transformers, other than transformers in bridge circuits, shall have primaries wound for the voltage available and secondaries wound for the correct control circuit voltage. Transformer shall be sized so that the connected load is 80 percent of the rated capacity or less. Transformers shall conform to UL 508 and NEMA ST 1.

2.4 ACTUATORS

Actuators shall be electric or electronic as shown and shall be provided with mounting and connecting hardware. Electric or electronic actuators shall be used for dampers. Actuators shall fail to their spring-return positions on signal or power failure. The actuator stroke shall be limited in the direction of power stroke by an adjustable stop. Actuators shall have a visible position indicator. Actuators shall smoothly open or close the devices to which they are applied and shall have a full stroke response time of 90 seconds or less. Electric actuators shall have an oil-immersed gear train. Electric or electronic actuators operating in series shall have an auxiliary actuator driver. Electric or electronic actuators used in sequencing applications shall have an adjustable operating range and start point.

2.5 DAMPERS

2.5.1 Damper Assembly

A single damper section shall have blades no longer than 48 inches and shall be no higher than 72 inches. Maximum damper blade width shall be 8 inches. Larger sizes shall be made from a combination of sections. Dampers shall be steel, or other materials where shown. Flat blades shall be made rigid by folding the edges. Blade-operating linkages shall be within the frame so that blade-connecting devices within the same damper

section shall not be located directly in the air stream. Damper axles shall be 0.5 inch minimum, plated steel rods supported in the damper frame by stainless steel or bronze bearings. Blades mounted vertically shall be supported by thrust bearings. Pressure drop through dampers shall not exceed 0.04 inch water gauge at 1,000 feet per minute in the wide-open position. Frames shall not be less than 2 inches in width. Dampers shall be tested in accordance with AMCA Std 500.

2.5.2 Operating Links

Operating links external to dampers, such as crankarms, connecting rods, and line shafting for transmitting motion from damper actuators to dampers, shall withstand a load equal to at least twice the maximum required damper-operating force. Rod lengths shall be adjustable. Links shall be brass, bronze, zinc-coated steel, or stainless steel. Working parts of joints and clevises shall be brass, bronze, or stainless steel. Adjustments of crankarms shall control the open and closed positions of dampers.

2.5.3 Damper Types

Two-position dampers shall be parallel-blade type. Modulating dampers shall be opposed-blade type.

2.5.3.1 Outside Air, Return Air, and Relief Air Dampers

Outside air, return air and relief air dampers shall be provided where shown. Blades shall have interlocking edges and shall be provided with compressible seals at points of contact. The channel frames of the dampers shall be provided with jamb seals to minimize air leakage. Dampers shall not leak in excess of 20 cfm per square foot at 4 inches water gauge static pressure when closed. Seals shall be suitable for an operating temperature range of minus 40 to plus 200 degrees F. Dampers shall be rated at not less than 2,000 feet per minute air velocity.

2.5.3.2 Mechanical and Electrical Space Ventilation Dampers

Mechanical and electrical space ventilation dampers shall be as shown. Dampers shall not leak in excess of 80 cfm square foot at 4 inches water gauge static pressure when closed. Dampers shall be rated at not less than 1,500 feet per minute air velocity.

2.5.4 Damper End Switches

Each end switch shall be a hermetically sealed switch with a trip lever and over-travel mechanism. The switch enclosure shall be suitable for mounting on the duct exterior and shall permit setting the position of the trip lever that actuates the switch. The trip lever shall be aligned with the damper blade.

2.6 SMOKE DETECTORS

Duct smoke detectors shall be provided in supply and return air ducts in accordance with NFPA 90A. Duct smoke detectors shall conform to the requirements of UL 268A. Duct smoke detectors are specified in Section 16721 FIRE DETECTION AND ALARM SYSTEM.

2.7 INSTRUMENTATION

2.7.1 Measurements

Transmitters shall be calibrated to provide the following measurements, over the indicated ranges, for an output of 4 to 20 mAdc:

a. Conditioned space temperature, from 50 to 85 degrees F.

b. Duct temperature, from 40 to 140 degrees F.

c. Outside-air temperature, from minus 30 to 130 degrees F.

d. Relative humidity, 0 to 100 percent for space and duct high-limit applications.

e. Differential pressure for VAV supply-duct static pressure from 0 to 2.0 inches water gauge.

f. Pitot-tube air-flow measurement station and transmitter, from 0 to 0.1 inch water gauge for flow velocities of 700 to 1200 fpm, 0 to 0.25 inch water gauge for velocities of 700 to 1800 fpm, or 0 to 0.5 inch water gauge for velocities of 700 to 2500 fpm.

g. Electronic air-flow measurement station and transmitter, from 125 to 2500 fpm.

2.7.2 Temperature Instruments

2.7.2.1 Resistance Temperature Detectors (RTD)

Temperature sensors shall be 100 ohms 3- or 4-wire RTD. Each RTD shall be platinum with a tolerance of 0.54 degrees F at 32 degrees F with a temperature coefficient of resistance (TCR) of .00214 ohms/ohm/deg F and shall be encapsulated in epoxy, series 300 stainless steel, anodized aluminum, or copper. Each RTD shall be furnished with an RTD transmitter as specified, integrally mounted unless otherwise shown.

2.7.2.2 Continuous Averaging RTD

Continuous averaging RTDs shall have a tolerance of plus or minus 1.0 degree F at the reference temperature, and shall be of sufficient length to ensure that the resistance represents an average over the cross section in which it is installed. The sensing element shall have a bendable copper sheath. Each averaging RTD shall be furnished with an RTD transmitter to match the resistance range of the averaging RTD.

2.7.2.3 RTD Transmitter

The RTD transmitter shall match the resistance range of the RTD. The transmitter shall be a two-wire, loop powered device. The transmitter shall produce a linear 4-to-20 mAdc output corresponding to the required temperature measurement. The output error shall not exceed 0.1 percent of the calibrated measurement.

2.7.3 Relative Humidity Instruments

A relative-humidity instrument for indoor application shall have a measurement range from 0 to 100 percent relative-humidity and be rated for operation at ambient air temperatures within the range of 25 to 130 degrees F. It shall be capable of being exposed to a condensing air stream

(100 percent RH) with no adverse effect to the sensor's calibration or other harm to the instrument. The instrument shall be of the wall-mounted or duct-mounted type, as required by the application, and shall be provided with any required accessories. Instruments used in duct high-limit applications shall have a bulk polymer resistive sensing element. Duct-mounted instruments shall be provided with a duct probe designed to protect the sensing element from dust accumulation and mechanical damage. The instrument (sensing element and transmitter) shall be a two-wire, loop-powered device and shall have an accuracy of plus or minus three percent of full scale within the range of 20 to 80 percent relative humidity. The instrument shall have a typical long-term stability of 1 percent or less drift per year. The transmitter shall convert the sensing element's output to a linear 4-20 mAdc output signal in proportion to the measured relative-humidity value. The transmitter shall include offset and span adjustments.

2.7.4 Differential Pressure Instruments

The instrument shall be a pressure transmitter with an integral sensing element. The instrument over pressure rating shall be 300 percent of the operating pressure. The sensor/transmitter assembly accuracy shall be plus or minus two percent of full scale. The transmitter shall be a two-wire, loop-powered device. The transmitter shall produce a linear 4-to-20 mAdc output corresponding to the required pressure measurement.

2.8 THERMOSTATS

Thermostat ranges shall be selected so that the setpoint is adjustable without tools between plus or minus 10 degrees F of the setpoint shown. Thermostats shall be electronic or electric.

2.8.1 Nonmodulating Room Thermostats

Contacts shall be single-pole double-throw (SPDT), hermetically sealed, and wired to identified terminals. Maximum differential shall be 5 degrees F. Room thermostats shall be enclosed with separate locking covers (guards).

2.8.2 Microprocessor Based Room Thermostats

Microprocessor based thermostats shall have built-in keypads for scheduling of day and night temperature settings. When out of the scheduling mode, thermostats shall have continuous display of time, with AM and PM indicator, continuous display of day of week, and either continuous display of room temperature with display of temperature setpoint on demand, or continuous display of temperature setpoint with display of room temperature on demand. In the programmable mode, the display shall be used for interrogating time program ON-OFF setpoints for all seven days of the week. The time program shall allow two separate temperature setback intervals per day. The thermostats shall have a means for temporary and manual override of the program schedule, with automatic program restoration on the following day. Thermostats shall have a replaceable battery to maintain the timing and maintain the schedule in memory for one year in the event of a power outage. Maximum differential shall be 2 degrees F.

2.8.3 Modulating Room Thermostats

Modulating room thermostats shall have either one output signal, two output signals operating in unison, or two output signals operating in sequence, as required for the application. Each thermostat shall have an adjustable

throttling range of 4 to 8 degrees F for each output. Room thermostats shall be enclosed with separate locking covers (guards).

2.8.4 Nonmodulating Capillary Thermostats and Aquastats

Each thermostat shall have a capillary length of at least 5 feet, shall have adjustable direct-reading scales for both setpoint and differential, and shall have a differential adjustable from 6 to 16 degrees F. Aquastats shall be of the strap on type, with 10 degrees F fixed differential.

2.8.5 Freezestats

Freezestats shall be manual reset, low temperature safety thermostats, with NO and NC contacts and a 20 foot element which shall respond to the coldest 18 inch segment.

2.8.6 Modulating Capillary Thermostats

Each thermostat shall have either one output signal, two output signals operating in unison, or two output signals operating in sequence, as required for the application. Thermostats shall have adjustable throttling ranges of 4 to 8 degrees F for each output.

2.8.7 Fan Coil Unit Thermostat

Thermostat for control of cooling and heating shall be furnished with fan coil unit. Thermostat shall have 2 stages of cooling. Thermostat shall have automatic changeover subbase with Off-Heat-Auto-Cool System Switch and Auto-On-Fan Switch. Maximum differential shall be 3 degrees F.

2.9 PRESSURE SWITCHES AND SOLENOID VALVES

2.9.1 Pressure Switches

Each switch shall have an adjustable setpoint with visible setpoint scale. Range shall be as shown. Differential adjustment shall span 20 to 40 percent of the range of the device.

2.9.2 Differential-Pressure Switches

Each switch shall be an adjustable diaphragm-operated device with two SPDT contacts, with taps for sensing lines to be connected to duct pressure fittings designed to sense air pressure. These fittings shall be of the angled-tip type with tips pointing into the air stream. The setpoint shall not be in the upper or lower quarters of the range and the range shall not be more than three times the setpoint. Differential shall be a maximum of 0.15 inch water gauge at the low end of the range and 0.35 inch water gauge at the high end of the range.

2.10 INDICATING DEVICES

2.10.1 Thermometers

2.10.1.1 Piping System Thermometers

Piping system thermometers shall have brass, malleable iron or aluminum alloy case and frame, clear protective face, permanently stabilized glass tube with indicating-fluid column, white face, black numbers, and a 9 inch

scale. Thermometers for piping systems shall have rigid stems with straight, angular, or inclined pattern.

2.10.1.2 Piping System Thermometer Stems

Thermometer stems shall have expansion heads as required to prevent breakage at extreme temperatures. On rigid-stem thermometers, the space between bulb and stem shall be filled with a heat-transfer medium.

2.10.1.3 Nonaveraging Air-Duct Thermometers

Air-duct thermometers shall have perforated stem guards and 45-degree adjustable duct flanges with locking mechanism.

2.10.1.4 Averaging Air-Duct Thermometers

Averaging thermometers shall have a 3-1/2 inch (nominal) dial, with black legend on white background, and pointer traveling through a 270-degree arc.

2.10.1.5 Accuracy

Thermometers shall have an accuracy of plus or minus one percent of scale range. Thermometers shall have a range suitable for the application.

2.10.2 Pressure Gauges

Gauges shall be 2 inch (nominal) size, back connected, suitable for field or panel mounting as required, shall have black legend on white background, and shall have a pointer traveling through a 270-degree arc. Accuracy shall be plus or minus three percent of scale range. Gauges shall meet requirements of ASME B40.1.

2.10.3 Low Differential Pressure Gauges

Gauges for low differential pressure measurements shall be a minimum of 3.5 inch (nominal) size with two sets of pressure taps, and shall have a diaphragm-actuated pointer, white dial with black figures, and pointer zero adjustment. Gauges shall have ranges and graduations as shown. Accuracy shall be plus or minus two percent of scale range.

2.10.4 Flow Transmitter

Impeller flow meter made for insertion in hydronic piping fluid flow that measures flow directly in gpm. Include register to indicate total volume in gallons. "Bi-directional" flow meter shall measure flow in either direction.

2.10.5 Volatile Organic Compound (VOC) Monitor

VOC monitor shall be a Detronics - Infiniti Gas Transmitter U9500 or approved equal. Sensor shall utilize combustible gas sensing, 0 to 100 percent LFL.

2.11 CONTROL DEVICES AND ACCESSORIES

2.11.1 Relays

Control relay contacts shall have utilization category and ratings selected for the application, with a minimum of two sets of contacts (two normally

open, two normally closed) enclosed in a dustproof enclosure. Relays shall be rated for a minimum life of one million operations. Operating time shall be 20 milliseconds or less. Relays shall be equipped with coil transient suppression devices to limit transients to 150 percent of rated coil voltage. Time delay relays shall be 2PDT with eight-pin connectors, dust cover, and a matching rail-mounted socket. Adjustable timing range shall be 0 to 5 minutes. Power consumption shall not be greater than three watts.

2.11.2 Current Sensing Relays

Current sensing relays shall provide a normally-open contact rated at a minimum of 50 volts peak and 1/2 ampere or 25 VA, noninductive. There shall be a single hole for passage of current carrying conductors. The devices shall be sized for operation at 50 percent rated current based on the connected load. Voltage isolation shall be a minimum of 600 volts.

2.11.3 Power-Line Conditioners (PLC)

Power line conditioners shall be furnished for each DDC panel. The PLCs shall provide both voltage regulation and noise rejection. The PLCs shall be of the ferro-resonant design, with no moving parts and no tap switching, while electrically isolating the secondary from the power-line side. The PLCs shall be sized for 125 percent of the actual connected kVA load. Characteristics of the PLC shall be as follows:

a. At 85 percent load, the output voltage shall not deviate by more than plus or minus one percent of nominal when the input voltage fluctuates between minus 20 percent to plus 10 percent of nominal.

b. During load changes of zero to full load, the output voltage shall not deviate by more than plus or minus three percent of nominal voltage. Full correction of load switching disturbances shall be accomplished within five cycles, and 95 percent correction shall be accomplished within two cycles of the onset of the disturbance.

c. Total harmonic distortion shall not exceed 3-1/2 percent at full load.

2.12 DIRECT DIGITAL CONTROL (DDC) HARDWARE

All functions, constraints, data base parameters, operator developed programs and any other data shall be downloadable from a portable workstation/tester to DDC control panels and local equipment controllers. Download shall be accomplished through both the primary network and the local DDC portable workstation/tester port.

2.12.1 DDC Control Panel

a. The Flight Kitchen Facility will have a DDC Control Panel. The DDC Control Panel shall provide the interface between the LAN or WAN and the field control devices, and provide global supervisory control functions over the control devices connected to the DDC Control Panel. It shall be capable of executing application control programs to provide:

(1) Calender functions.

(2) Scheduling.

(3) Trending.

(4) Alarm monitoring and routing.

(5) Time synchronization.

(6) Integration of LonWorks controller data.

(7) Network Management functions for all LonWorks based devices.

b. The DDC Control Panel must provide the following hardware features as a minimum:

(1) One Ethernet Port -10/100 Mbps.

(2) One RS-232 port.

(3) One LonWorks Interface Port - 78KB FTT-10A.

(4) Battery backup.

(5) Flash memory for long term data backup (if battery backup or flash memory is not supplied, the controller must contain a hard disk with at least 1 gigabyte storage capacity).

(6) The DDC Control Panel must be capable of operation over a temperature range of 32 to 130 degrees F.

(7) The DDC Control Panel must be capable of withstanding storage temperatures of between 32 and 158 degrees F.

(8) The DDC Control Panel must be capable of operation over a humidity range of 5 to 95 percent RH, noncondensing.

c. The DDC Control Panel shall support standard web browser access via the Intranet/Internet. It shall support a minimum of 16 simultaneous users.

2.12.2 Unitary Local Equipment Controller

The unitary controller shall be a microprocessor based, stand-alone, dedicated purpose controller, communicating with the DDC Control Panel, designed and programmed to control air distribution system mixing boxes, packaged rooftop units, fan coil units, as shown. Each unitary local equipment controller must be a LonMark based device and shall be a LonWorks/LonMark controller. Each unitary controller shall contain resident programs in nonvolatile memory for each specific application implemented. Each unitary controller shall contain necessary power supplies, transformers, memory, I/O functions and communications interfaces necessary to perform its required functions and to provide control and monitoring of connected equipment and devices. It shall contain all necessary I/O functions to connect to field sensors and controls. I/O operation shall be fully supervised to detect I/O function failures and shall provide for operation as a device connected to the DDC Control panel via the manufacturers control network.

2.12.2.1 Integral Features

The unitary controller shall include:

a. Main power switch.

b. Power on indicator.

c. Portable workstation/tester port, connector, and power supply.

d. Manufacturers control network port.

e. All I/O functions required to implement the requirements as shown.

f. On-Off-Auto switches for each DO which controls a device. These switches shall be mounted in the field panel, with the exception of motors, for which the switch shall be mounted at the motor control center. On-Off-Auto switches are not required for DO associated with a status or alarm such as pilot lights. The status of these switches shall be available to the panel for further processing.

g. Minimum-Maximum-Auto switches, or Auto-Manual switches with manual output override, for each AO. The status of these shall be available to the panel for further processing.

2.12.2.2 Communication Interfaces

The unitary local equipment controller shall have the following communication capabilities which shall function simultaneously.

a. Manufacturers Control Network. The manufacturers control network communications interface for a data transmission systems (DTS) circuit between the unitary local equipment controller and a DDC Control Panel shall be provided. The DTS will provide for transmission speeds necessary to comply with performance requirements specified. DTS equipment shall be installed in the unitary control panel enclosure.

b. Portable Workstation/Tester Port. A communications port for interfacing to a portable workstation/tester shall be provided. A unitary controller workstation/tester port other than RS-232, shall be converted to RS-232, including cabling and power supply, and shall be permanently installed in the panel. For unitary controller applications where the controller is not mounted in an enclosure, such as for fan-coil units or VAV terminal units, a portable conversion device for an RS-232 connection to the portable workstation/tester may be provided.

2.12.2.3 Specific Requirements

Accessibility and Interfaces: Each unitary local equipment controller shall be accessible for purposes of application selection, control parameters, set point adjustment, and monitoring using a portable workstation/tester connected to the manufacturers control network. They shall also be accessible with a portable workstation/tester connected to the unitary local equipment controller portable workstation/tester port.

2.12.2.4 Failure Mode

Upon failure of the unitary local equipment controller, it shall revert to the failure mode of operation as shown.

2.12.3 Network Communications

Access to the system shall be via the base-wide LAN from a remote location or from a local command entry device by direct communication to the Ethernet LAN. TCP/IP address shall be government provided.
The system shall be capable of supporting an unlimited number of clients using a standard Web browser such as Internet Explorer™ or Netscape Navigator™. Systems requiring additional software (to enable a standard Web browser) to be resident on the client machine, or manufacture-specific browsers shall not be acceptable.

The Web browser client shall support at a minimum, the following functions:

a. User log-on identification and password shall be required. If an unauthorized user attempts access, a blank web page shall be displayed. Security using Java authentication and encryption techniques to prevent unauthorized access shall be implemented.

b. Graphical screens developed for the GUI shall be the same screens used for the Web browser client. Any animated graphical objects supported by the GUI shall be supported by the Web browser interface.

c. HTML programming shall not be required to display system graphics or data on a Web page. HTML editing of the Web page shall be allowed if the user desires a specific look or format.

d. Storage of the graphical screens shall be in the DDC Control Panel, without requiring any graphics to be stored on the client machine. Systems that require graphics storage on each client are not acceptable.

e. Real-time values displayed on a Web page shall update automatically without requiring a manual "refresh" of the Web page.

f. Users shall have administrator-defined access privileges. Depending on the access privileges assigned, the user shall be able to perform the following:

(1) Modify common application objects, such as schedules, calendars, and set points in a graphical manner.

(2) Start/stop binary objects.

(3) View logs and charts.

(4) View and acknowledge alarms.

2.12.4 Communication

The DDC system shall be equipped with a minimum one Ethernet Port -10/100 Mbps for connection to the base-wide LAN and one LonWorks Interface Port - 78KB FTT-10A for connection to field devices. The DDC system shall support access with Internet Explorer™ or Netscape Navigator™ via the base-wide intranet and by direct connection to the Ethernet LAN. The system shall support a minimum of 16 simultaneous users.

The field bus communications network shall be based on industry standard LonWorks open protocol. All communications shall be via twisted pairs wires, shielded where required and approved for use with LonWorks Free

Topology Transceivers.

a. UCs and intelligent actuators and sensors shall reside directly on a peer-to-peer network utilizing LonMark™ configurations with selectable speed from 78K baud up to 1 megabit. Bus speed shall be selected to maintain the required system response times. Physical media configurations shall be provided to support the LonWorks protocol.

b. The system shall support an optional Radio Frequency Interface for communication with electric, gas and water meters for remote readings. The interface shall be a standard 900 MHz Spread-Spectrum RF interface which supports communications distances of up to one mile. This interface shall support a minimum of 400 meters of a mix of any type (gas, electric or water).

2.12.5 I/O Functions

2.12.5.1 DDC Hardware I/O Functions

I/O Functions shall be provided as part of the DDC system and shall be in accordance with the following:

a. The analog input (AI) function shall monitor each analog input, perform A-to-D conversion, and hold the digital value in a buffer for interrogation. The A-to-D conversion shall have a minimum resolution of 10 bits plus sign. Signal conditioning shall be provided for each analog input. Analog inputs shall be individually calibrated for zero and span, in hardware or in software. The AI shall incorporate common mode noise rejection of 50 dB from 0 to 100 Hz for differential inputs, and normal mode noise rejection of 20 dB at 60 Hz from a source impedance of 10,000 ohms. Input ranges shall be within the range of 4-to-20 mAdc.

b. The analog output (AO) function shall accept digital data, perform D-to-A conversion, and output a signal within the range of 4-to-20 mAdc. D-to-A conversion shall have a minimum resolution of eight bits plus sign. Analog outputs shall be individually calibrated for zero and span. Short circuit protection on voltage outputs and open circuit protection on current outputs shall be provided. An individual gradual switch for manual override of each analog output and means of physically securing access to these switches shall be provided. Each AO shall have a three-position switch for selection of the DDC control signal, no control, or a locally generated control signal for connection to the controlled device. Feedback shall be provided to the system as to the status of the output (manual control or automatic). All switches shall be either of a key operated design with the same keying system used for other outputs or otherwise suitably protected from unauthorized access.

c. The digital input (DI) function shall accept on-off, open-close, or other change of state (two state data) indications. Isolation and protection against an applied steady-state voltage up to 180 Vac peak shall be provided.

d. The digital output (DO) function shall provide contact closures for momentary and maintained operation of output devices. Closures shall have a minimum duration of 0.1 second. DO relays shall have an initial breakdown voltage between contacts and coil of at least 500 V peak. Electromagnetic interference suppression shall be furnished on all output

lines to limit transients to nondamaging levels. Protection against an applied steady-state voltage up to 180 Vac peak shall be provided. Minimum contact rating shall be one ampere at 24 Vac. Key locked HOA switches shall be provided for manual override of each digital output. Feedback shall be provided to the system as to the status of the output (manual control or automatic). Switches shall be common keyed.

e. The pulse accumulator function shall have the same characteristics as the DI. In addition, a buffer shall be provided to totalize pulses and allow for interrogation by the DDC system. The pulse accumulator shall accept rates up to 20 pulses per second. The totalized value shall be reset to zero upon operator's command.

f. Signal conditioning for sensors shall be provided as specified.

g. The binary coded decimal (BCD) function: The BCD function shall have the same characteristics as the DI, except that, in addition, a buffer shall be provided to totalize inputs and allow for interrogation by the network control panel. The BCD function shall have 16-channel optically isolated buffered inputs to read four digit numbers. The BCD function shall accumulate inputs at rates up to 10 inputs per second.

2.12.5.2 Failure Mode

Upon failure of the I/O function, including data transmission failure, logic power supply failure, DDC processor malfunction, software failure, interposing relay power failure, or any other failure which prevents stand alone operation of any DDC normally capable of stand alone operation, connected outputs shall be forced to the failure mode shown.

2.12.6 Portable Workstation/Tester

A portable workstation/tester shall be provided and shall be able to connect to any DDC hardware. The portable workstation/tester shall consist of a portable computer with a nominal 10 inch active color matrix liquid crystal display, capable of displaying up to 256 colors at a minimum resolution of 640 X 480 pixels, an external VGA monitor port, 32 bit microprocessor operating at a minimum of 100 MHZ. The portable workstation/tester shall have, as a minimum, a 1200 MB hard drive, 16 megabytes of memory, integral pointing device, serial and parallel ports, color VGA video port for an external color monitor, 3.5 inch floppy disk drive, modem, PCMCIA type 3 slot, rechargeable battery, battery charger and 120 Vac power supply. It shall include carrying case, extra battery, charger and a compatible network adapter. The workstation/tester shall:

a. Run DDC diagnostics.

b. Load all DDC memory resident programs and information, including parameters and constraints.

c. Display any AI, DI, AO, DO, or PA point in engineering units for analog points or status for digital points.

d. Control any AO or DO.

e. Provide an operator interface, contingent on password level, allowing the operator to use full English language words and acronyms, or an object oriented graphical user interface.

f. Display database parameters.

g. Modify database parameters.

h. Accept DDC software and information for subsequent loading into a specific DDC. Provide all necessary software and hardware required to support this function, including an EIA ANSI/EIA/TIA 232-F port.

i. Disable/enable each DDC.

j. Perform all workstation functions as specified.

2.13 DDC SOFTWARE

All DDC software described in this specification shall be furnished as part of the complete DDC System.

2.13.1 Operating System

Each DDC shall contain an operating system that controls and schedules that DDC's activities in real time. The DDC shall maintain a point database in its memory that includes all parameters, constraints, and the latest value or status of all points connected to that DDC. The execution of DDC application programs shall utilize the data in memory resident files. The operating system shall include a real time clock function that maintains the seconds, minutes, hours, date and month, including day of the week. Each DDC real time clock shall be automatically synchronized with the DDC control panel real time clock at least once per day to plus or minus 10 seconds. When the DDC control panel is connected to a central workstation/tester, the DDC control panel RTC shall be updated by the central workstation/tester RTC. The time synchronization shall be accomplished without operator intervention and without requiring system shutdown. The operating system shall allow loading of software, data files data entry, and diagnostics from the central workstation/tester both locally through the central workstation/tester port and remotely through a DDC control panel and the manufacturers control network.

2.13.1.1 Startup

The DDC shall have startup software that causes automatic commencement of operation without human intervention, including startup of all connected I/O functions. A DDC restart program based on detection of power failure at the DDC shall be included in the DDC software. Upon restoration of power to the DDC, the program shall restart equipment and restore loads to the state at time of power failure, or to the state as commanded by time programs or other overriding programs. The restart program shall include start time delays between successive commands to prevent demand surges or overload trips. The startup software shall initiate operation of self-test diagnostic routines. Upon failure of the DDC, if the database and application software are no longer resident or if the clock cannot be read, the DDC shall not restart and systems shall remain in the failure mode indicated until the necessary repairs are made. If the database and application programs are resident, the DDC shall resume operation after an adjustable time delay of from 0 to 600 seconds. The startup sequence for each DDC shall include a unique time delay setting for each control output when system operation is initiated.

2.13.1.2 Operating Mode

Each DDC shall control and monitor functions as specified, independent of communications with other DDC. This software shall perform all DDC functions and DDC resident application programs as specified using data obtained from I/O functions and based upon the DDC real time clock function. When communications circuits between the DDC are operable, the DDC shall obtain real time clock updates and any required global data values transmitted from other DDC control panels. The DDC software shall execute commands after performing constraints checks in the DDC. Status and analog values, including alarms and other data shall be transmitted from other DDC control panels when communications circuits are operable. If communications are not available, each DDC shall function in stand-alone mode and operational data, including the latest status and value of each point and results of calculations, normally transmitted from other DDC control panels shall be stored for later transmission to the DDC control panel. Storage for the latest 256 values shall be provided at each DDC control panel. Each DDC shall accept software downloaded from the DDC control panel. Constraints shall reside at the DDC.

2.13.1.3 Failure Mode

Upon failure for any reason, each DDC shall perform an orderly shutdown and force all DDC outputs to a predetermined (failure mode) state, consistent with the failure modes shown and the associated control device.

2.13.2 Functions

The Contractor shall provide software necessary to accomplish the following functions, as appropriate, fully implemented and operational, within each DDC control panel and unitary local equipment controller.

a. Scanning of inputs.

b. Control of outputs.

c. Reporting of analog changes outside a selectable differential.

d. Reporting of unauthorized digital status.

e. Reporting of alarms automatically to network control panel.

f. Reporting of I/O status to network control panel upon request.

g. Maintenance of real time, updated by the DDC control panel at least once a day.

h. Communication with the network control panel.

i. Execution of DDC resident application programs.

j. Averaging or filtering of AIs.

k. Constraints checks (prior to command issuance).

l. Diagnostics.

m. Portable workstation/tester operation as specified.

n. Reset of PA by operator based on time and value.

2.13.2.1 Analog Monitoring

The system shall measure and transmit analog values including calculated analog points. An analog change in value is defined as a change exceeding a preset differential value as specified. The record transmitted for each analog value shall include a readily identifiable flag which indicates the abnormal status of the value when it deviates from operator selectable upper and lower analog limits. Analog values shall be expressed in proper engineering units with sign. Engineering units conversions shall be provided for each measurement. Each engineering units conversion set shall include range, span, and conversion equation. A vocabulary of engineering unit descriptors shall be provided, using at least three alphanumeric characters to identify information in the system. The system shall support 255 different engineering units.

2.13.2.2 Logic (Virtual) Points

Logic (virtual) points shall be software points entered in the point database which are not directly associated with a physical I/O function. Logic (virtual) points shall be analog or digital points created by calculation from any combination of digital and analog points, or other data having the properties of real points, including alarms, without the associated hardware. Logic (virtual) points shall be defined or calculated and entered into the database by the Contractor. The calculated analog point shall have point identification in the same format as any other analog point. The calculated point shall be used in any program where the real value is not obtainable directly. Constants used in calculations shall be changeable on-line by the operator. Calculated point values shall be current for use by the system within 10 seconds of the time of any input changes.

2.13.2.3 State Variables

If an analog point represents more than two (up to eight) specific states, each state shall be nameable. For example, a level sensor shall be displayed at its measured engineering units plus a state variable with named states usable in programs or for display such as low alarm/low/normal/high/high alarm.

2.13.2.4 Analog Totalization

Any analog point shall be operator assignable to the totalization program. Up to eight analog values shall be totalized within a selectable time period. At the end of the period, the totals shall be stored. Totalization shall then restart from zero for the next time period. The program shall keep track of the peak and total value measured during the current period and for the previous period. The operator shall be able to set or reset each totalized value individually. The time period shall be able to be operator defined, modified or deleted on-line.

2.13.2.5 Energy Totalization

The system shall calculate the heat energy in Btus, for each energy source consumed by the mechanical systems specified, totalize the calculated Btus, the instantaneous rate in Btus per hour, and store totals in thousands of Btus (MBtu). The Btus calculated shall be totalized for an adjustable time period. The time period shall be defined uniquely for each Btu totalization.

2.13.2.6 Trending

Any analog or calculated point shall be operator assignable to the trend program. Up to eight points shall be sampled at individually assigned intervals, selectable between one minute and two hours. A minimum of the most recent 128 samples of each trended point shall be stored. The sample intervals shall be able to be defined, modified, or deleted on-line.

2.13.3 I/O Point Database/Parameter Definition

Each I/O point shall be defined in a database residing in the DDC. The definition shall include all physical parameters associated with each point. Each point shall be defined and entered into the database by the Contractor, including as applicable:

a. Name.

b. Device or sensor type (i.e., sensor, control relay, motors).

c. Point identification number.

d. Unit.

e. Building number.

f. Area.

g. DDC number and channel address.

h. KW (running).

i. KW (starting).

j. Sensor range.

k. Controller range.

l. Sensor span.

m. Controller span.

n. Engineering units conversion (scale factor).

o. Setpoint (analog).

p. High reasonableness value (analog).

q. Low reasonableness value (analog).

r. High alarm limit differential (return to normal).

s. Low alarm limit differential (return to normal).

t. High alarm limit (analog).

u. Low alarm limit (analog).

v. Alarm disable time period upon startup or change of setpoint.

w. Analog change differential (for reporting).

x. Alarm class and associated primary message text.

y. High accumulator limit (pulse).

z. Status description.

aa. Run time target.

bb. Failure mode as specified and shown.

cc. Constraints as specified.

2.13.4 Alarm Processing

Each DDC shall have alarm processing software for AI, DI, and PA alarms for all real and virtual points connected to that DDC.

2.13.4.1 Digital Alarms Definition

Digital alarms are those abnormal conditions indicated by DIs as specified and shown.

2.13.4.2 Analog Alarms Definition

Analog alarms are those conditions higher or lower than a defined value, as measured by an AI. Analog readings shall be compared to predefined high and low limits, and alarmed each time a value enters or returns from a limit condition. Unique high and low limits shall be assigned to each analog point in the system. Analog alarm limits shall be stored in the DDC database. Each analog alarm limit shall have an associated unique limit differential specifying the amount by which a variable must return into the proper operating range before being annunciated as a return-to-normal-state. All limits and differentials shall be entered on-line by the operator in limits of the measured variable, without interruption or loss of monitoring of the point concerned. The program shall automatically change the high or low limits or both, of any analog point, based on time scheduled operations as specified, allowing for a time interval before the alarm limit becomes effective. In CPA applications, key the limit to a finite deviation traveling with the setpoint. The system shall automatically suppress analog alarm reporting associated with a digital point when that digital point is turned off.

2.13.4.3 Pulse Accumulator Alarms Definition

Pulse accumulator alarms are those conditions calculated from totalized values of accumulator inputs or PA input rates that are outside defined limits as specified and shown. PA totalized values shall be compared to predefined limits and alarmed each time a value enters a limit condition. Unique limits shall be assigned to each PA point in the system. Limits shall be stored in the DDC database.

2.13.5 Constraints

2.13.5.1 Equipment Constraints Definitions

Each control point in the database shall have DDC resident constraints defined and entered by the Contractor, including as applicable:

a. Maximum starts (cycles) per hour.

b. Minimum off time.

c. Minimum on time.

d. High limit (value in engineering units).

e. Low limit (value in engineering units).

2.13.5.2 Constraints Checks

Control devices connected to the system shall have the DDC memory resident constraints checked before each command is issued to insure that no equipment damage will result from improper operation. Each command shall be executed by the DDC only after all constraints checks have been passed. Each command point shall have unique constraints assigned. High and low "reasonableness" values or one differential "rate-of-change" value shall be assigned to each AI. Values outside the reasonableness limits shall be rejected and an alarm message sent to the DDC control panel or portable workstation/tester. Status changes and analog point values shall be reported to the workstation upon operator request, such as for reports, alphanumeric displays, graphic displays, and application programs. Each individual point shall be capable of being selectively disabled by the operator from a workstation/tester. Disabling a point shall prohibit monitoring and automatic control of that point.

2.13.6 Diagnostics

Each DDC shall have self-test diagnostic routines implemented in firmware. The tests shall include routines that exercise memory. Diagnostic software shall be usable in conjunction with the central workstation/tester and portable workstation/tester. The software shall display messages in English to inform the tester's operator of diagnosed problems.

2.13.7 Summer-Winter Operation Monitoring

The system shall provide software to automatically change the operating parameters, monitoring of alarm limits, and start-stop schedules for each mechanical system from summer to winter and vice-versa. The software shall provide automatic commands to applications programs to coordinate proper summer or winter operation. Change over setpoints shall be operator selectable and settable.

2.13.8 Control Sequences and Control Loops

Sufficient memory shall be provided to implement the requirements specified and shown for each DDC. Specific functions to be implemented are defined in individual system control sequences and database tables shown in the drawings, and shall include, as applicable, the following:

a. PI Control: This function shall provide proportional control and proportional plus integral control.

b. Two Position Control: This function shall provide control for a two state device by comparing a set point against a process variable and an established deadband.

c. Floating Point Control: This function shall exercise control when an error signal exceeds a selected deadband, and shall maintain control until the error is within the deadband limits.

d. Signal Selection: This function shall allow the selection of the highest or lowest analog value from a group of analog values as the basis of control. The function shall include the ability to cascade analog values so that large numbers of inputs can be reduced to one or two outputs.

e. Signal Averaging: This function shall allow the mathematical calculation of the average analog value from a group of analog values as the basis of control. The function shall include the ability to "weight" the individual analog values so that the function output can be biased as necessary to achieve proper control.

f. Reset Function: This function shall develop an AO based on up to two AIs and one operator specified reset schedule.

g. Cooling/Heating Operation Program: Software shall be provided to change, either automatically or on operator command, the operating parameters, monitoring of alarm limits, and start-stop schedules for each mechanical system where such a change from cooling to heating and vice versa is meaningful. The software shall provide commands to application programs to coordinate cooling or heating mode operation. Software shall automatically switch facilities from cooling to heating, and vice versa, based on schedules or temperatures. All HVAC equipment and systems shall be assigned to the program.

2.13.9 Command Priorities

A scheme of priority levels shall be provided to prevent interaction of a command of low priority with a command of higher priority. The system shall require the latest highest priority command addressed to a single point to be stored for a period of time longer than the longest time constraint in the on and off states, insuring that the correct command shall be issued when the time constraint is no longer in effect or report the rejected command. Override commands entered by the operator shall have higher priority than those emanating from applications programs.

2.13.10 Resident Application Software

The Contractor shall provide resident applications programs to achieve the sequences of operation, parameters, constraints, and interlocks necessary to provide control of the systems connected to the DDC system. Application programs shall be resident and shall execute in the DDC, and shall coordinate with each other, to insure that no conflicts or contentions remain unresolved. The Contractor shall coordinate the application programs specified with the equipment and controls operation, and other specified requirements. A scheme of priority levels shall be provided to prevent interaction of a command of low priority with a command of higher priority. The system shall require the latest highest priority command addressed to a single point to be stored for a period of time longer than the longest time constraint in the ON and OFF states, insuring that the correct command shall be issued when the time constraint is no longer in effect or the rejected command shall be reported. Override commands entered by the operator shall have higher priority than those emanating from application programs.

2.13.10.1 Program Inputs and Outputs

The Contractor shall select the appropriate program inputs listed for each application program to calculate the required program outputs. Where the specific program inputs are not available, a "default" value or virtual point appropriate for the equipment being controlled and the proposed sequence of operation shall be provided to replace the missing input, thus allowing the application program to operate. AIs to application programs shall have an operator adjustable deadband to preclude short cycling or hunting. Program outputs shall be real analog or digital outputs or logic (virtual) points as required to provide the specified functions. The Contractor shall select the appropriate input and output signals to satisfy the requirements for control of systems as shown.

2.13.10.2 DDC General Conditions

The Contractor shall provide software required to achieve the sequences of operation, parameters, constraints, and interlocks shown. Application software shall be resident in the DDC in addition to any other required software. In the event of a DDC failure, the controlled equipment shall continue to function in the failure mode shown.

2.13.10.3 Scheduled Start/Stop Program

This program shall start and stop equipment based on a time of day schedule for each day of the week, and on a holiday schedule. To eliminate power surges, an operator adjustable time delay shall be provided between consecutive start commands.

a. Program Inputs:

(1) Day of week/holiday.

(2) Time of day.

(3) Cooling and heating high-low alarm limits.

(4) Cooling and heating start-stop schedules.

(5) Cooling or heating mode of operation.

(6) Equipment status.

(7) Equipment constraints.

(8) Consecutive start time delay.

b. Program Outputs: Start/stop signal.

2.13.10.4 Optimum Start/Stop Program

This program shall start and stop equipment as specified for the scheduled start/stop program, but shall include a sliding schedule based on indoor and outdoor air conditions. The program shall take into account the thermal characteristics of the structure, and indoor and outdoor air conditions, using prediction software to determine the minimum time of HVAC system operation needed to satisfy space environmental requirements at the start of the occupied cycle, and determine the earliest time for stopping equipment at the day's end without exceeding space environmental requirements. An adaptive control algorithm shall be utilized to

automatically adjust the constants used in the program.

a. Program Inputs:

(1) Day of week/holiday.

(2) Time of day.

(3) Cooling or heating mode of operation.

(4) Equipment status.

(5) Cooling and heating building occupancy schedules.

(6) Space temperature.

(7) Building heating constant (operator adjustable and automatically optimized).

(8) Building cooling constant (operator adjustable and automatically optimized).

(9) OA temperature.

(10) Required space temperature at occupancy (heating).

(11) Required space temperature at occupancy (cooling).

(12) Equipment constraints.

(13) Cooling and heating high-low alarm limits.

b. Program Outputs: Start/stop signal.

2.13.10.5 Day-Night Setback Program

The software shall limit the rise or drop of space temperature (or specified fluid temperature) during unoccupied hours. Whenever the space temperature (or specified fluid temperature) is above (or below for heating) the operator assigned temperature limit, the system shall be turned on until the temperature is within the assigned temperature limit.

a. Program Inputs:

(1) Day of week.

(2) Time of day.

(3) Cooling or heating mode of operation.

(4) Cooling and heating occupancy schedules.

(5) Equipment status.

(6) Space temperature (or specified fluid temperature).

(7) Minimum space temperature (or specified fluid temperature) during unoccupied periods.

(8) Maximum space temperature (or specified fluid temperature) during unoccupied periods.

(9) Equipment constraints.

b. Program Outputs: Start/stop signal.

2.13.10.6 Makeup Air Unit Program

The software shall control gas heat section to maintain space/supply air temperatures for heating and ventilating units. This program shall be coordinated with the ventilation-recirculation program for damper control and the scheduled or optimum start-stop program for fan control.

a. Program Inputs

(1) Space temperature.
(2) Space temperature setpoint.
(3) Supply air temperature.
(4) Supply air temperature setpoint.

b. Program Outputs

(1) Damper actuator control signal.

PART 3 EXECUTION

3.1 GENERAL INSTALLATION CRITERIA

3.1.1 HVAC Control System

The HVAC control system shall be completely installed and ready for operation. Dielectric isolation shall be provided where dissimilar metals are used for connection and support. Penetrations through and mounting holes in the building exterior shall be made watertight. The HVAC control system installation shall provide clearance for control system maintenance by maintaining access space between coils, access space to mixed-air plenums, and other access space required to calibrate, remove, repair, or replace control system devices. The control system installation shall not interfere with the clearance requirements for mechanical and electrical system maintenance.

3.1.2 Software Installation

Software shall be loaded for an operational system, including databases for all points, operational parameters, and system, command, and application software. The Contractor shall provide original and backup copies of source, excluding the general purpose operating systems and utility programs furnished by computer manufacturers and the non-job-specific proprietary code furnished by the system manufacturer, and object modules for software on each type of media utilized, within 30 days of formal Government acceptance. In addition, a copy of individual floppy disks of software for each DDC panel shall be provided.

3.1.3 Device Mounting Criteria

Devices mounted in or on piping or ductwork, on building surfaces, in mechanical/electrical spaces, or in occupied space ceilings shall be installed in accordance with manufacturer's recommendations and as shown.

Control devices to be installed in piping and ductwork shall be provided with required gaskets, flanges, thermal compounds, insulation, piping, fittings, and manual valves for shutoff, equalization, purging, and calibration. Strap-on temperature sensing elements shall not be used except as specified.

3.1.4 Wiring Criteria

Wiring external to control panels, including low-voltage wiring, shall be installed in metallic raceways. Nonmetallic-sheathed cables or metallic-armored cables may be installed in areas permitted by NFPA 70 Wiring shall be installed without splices between control devices and DDC panels. Instrumentation grounding shall be installed as necessary to prevent ground loops, noise, and surges from adversely affecting operation of the system. Ground rods installed by the contractor shall be tested as specified in IEEE Std 142. Cables and conductor wires shall be tagged at both ends, with the identifier shown on the shop drawings. Electrical work shall be as specified in Section 16415 ELECTRICAL WORK, INTERIOR and as shown.

3.2 CONTROL SYSTEM INSTALLATION

3.2.1 Damper Actuators

Actuators shall not be mounted in the air stream. Multiple actuators operating a common damper shall be connected to a common drive shaft. Actuators shall be installed so that their action shall seal the damper to the extent required to maintain leakage at or below the specified rate and shall move the blades smoothly.

3.2.2 Room Instrument Mounting

Room instruments , such as wall mounted thermostats, shall be mounted 60 inches above the floor unless otherwise shown. Temperature setpoint devices shall be recess mounted.

3.2.3 Freezestats

For each 20 square feet of coil face area, or fraction thereof, a freezestat shall be provided to sense the temperature at the location shown. Manual reset freezestats shall be installed in approved, accessible locations where they can be reset easily. The freezestat sensing element shall be installed in a serpentine pattern.

3.2.4 Averaging Temperature Sensing Elements

Sensing elements shall have a total element minimum length equal to 1 linear foot per square foot of duct cross-sectional area.

3.2.5 Duct Static Pressure Sensing Elements and Transmitters

The duct static pressure sensing element and transmitter sensing point shall be located at 75% to 100% of the distance between the first and last air terminal units.

3.2.6 Indication Devices Installed in Piping and Liquid Systems

Gauges in piping systems subject to pulsation shall have snubbers. Gauges for steam service shall have pigtail fittings with cock. Thermometers and

temperature sensing elements installed in liquid systems shall be installed in thermowells.

3.3 CONTROL SEQUENCES OF OPERATION

Sequence of operations for HVAC systems are shown on the HVAC Contract Drawings.

3.4 COMMISSIONING PROCEDURES

3.4.1 Evaluations

The Contractor shall make the observations, adjustments, calibrations, measurements, and tests of the control systems, set the time schedule, and make any necessary control system corrections to ensure that the systems function as described in the sequence of operation.

3.4.1.1 Item Check

Signal levels shall be recorded for the extreme positions of each controlled device. An item-by-item check of the sequence of operation requirements shall be performed using Steps 1 through 4 in the specified control system commissioning procedures. Steps 1, 2, and 3 shall be performed with the HVAC system shut down; Step 4 shall be performed after the HVAC systems have been started. External input signals to the DDC system (such as starter auxiliary contacts, and external systems) may be simulated in steps 1, 2, and 3. With each operational mode signal change, DDC system output relay contacts shall be observed to ensure that they function.

3.4.1.2 Weather Dependent Test Procedures

Weather dependent test procedures that cannot be performed by simulation shall be performed in the appropriate climatic season. When simulation is used, the actual results shall be verified in the appropriate season.

3.4.1.3 Two-Point Accuracy Check

A two-point accuracy check of the calibration of each HVAC control system sensing element and transmitter shall be performed by comparing the DDC system readout to the actual value of the variable measured at the sensing element and transmitter or airflow measurement station location. Digital indicating test instruments shall be used, such as digital thermometers, motor-driven psychrometers, and tachometers. The test instruments shall be at least twice as accurate as the specified sensing element-to-DDC system readout accuracy. The calibration of the test instruments shall be traceable to National Institute Of Standards And Technology standards. The first check point shall be with the HVAC system in the shutdown condition, and the second check point shall be with the HVAC system in an operational condition. Calibration checks shall verify that the sensing element-to-DDC system readout accuracies at two points are within the specified product accuracy tolerances. If not, the device shall be recalibrated or replaced and the calibration check repeated.

3.4.1.4 Insertion and Immersion Temperatures

Insertion temperature and immersion temperature sensing elements and transmitter-to-DDC system readout calibration accuracy shall be checked at one physical location along the axis of the sensing element.

3.4.1.5 Averaging Temperature

Averaging temperature sensing element and transmitter-to-DDC system readout calibration accuracy shall be checked every 2 feet along the axis of the sensing element in the proximity of the sensing element, for a maximum of 10 readings. These readings shall then be averaged.

3.4.2 Unit Heater

The "OFF/AUTO" switch shall be placed in the "OFF" position. Each space thermostat temperature setting shall be turned up so that it makes contact to turn on the unit heater fans. The unit heater fans shall not start. The "OFF/AUTO" switch shall be placed in the "AUTO" position. It shall be ensured that the unit heater fans start. Each space thermostat temperature setting shall be turned down, and the unit heater fans shall stop. The thermostats shall be set at their temperature setpoints. The results of testing of one of each type of unit shall be logged.

3.4.3 Packaged Rooftop Units

The schedules shall be manually entered for day temperature and night temperature setpoints as shown. The fan "AUTO/ON" switch shall be set to "ON." The time shall be manually entered as "DAY." The "HEATING/COOLING" switch shall be set to "HEATING" and it shall be ensured that cooling is off. The temperature setpoint shall be raised and it shall be ensured that heating starts. The "HEATING/COOLING" switch shall be set to "COOLING" and it shall be ensured that heat is off. The temperature setpoint shall be lowered and it shall be ensured that cooling starts. The fan "AUTO/ON" switch shall be set to "AUTO" and the foregoing procedure repeated. The fan shall start and stop automatically with the starting and stopping of heating and cooling. The time shall be manually entered as "NIGHT." The foregoing procedures shall be repeated. When the system is verified as operational, the correct "DAY" and "NIGHT" temperature settings shall be restored and the correct time restored. The power to the thermostat shall be shut off and it shall be verified that the thermostat clock keeps time. The results of testing of one of each type of unit shall be logged.

3.4.4 Makeup Air Unit

Steps for installation are as follows:

a. Step 1 - System Inspection: The HVAC system shall be observed in its shutdown condition. The system shall be checked to see that power and main air are available where required, the outside air damper and relief air damper are closed, and the return air damper is open.

b. Step 2 - Calibration Accuracy Check with HVAC System Shutdown: Readings shall be taken with a digital thermometer at each temperature sensing element location. Each temperature shall be read at the DDC controller, and the thermometer and DDC system readings logged. The calibration accuracy of the sensing element-to-DDC system readout for space temperature shall be checked.

c. Step 3 - Actuator Range Adjustments: A signal shall be applied to the actuator through an operator entered value to the DDC system. The proper operation of the actuators and positioners for all dampers and valves shall be verified. The signal shall be varied from live zero to full range, and that the actuators travel from zero stroke to full stroke

within the signal range shall be verified. It shall be verified that all sequenced and parallel-operated actuators move from zero stroke to full stroke in the proper direction, and move the connected device in the proper direction from one extreme position to the other.

d. Step 4 - Control System Commissioning:

(1) With the fan ready to start, the system shall be placed in the ventilation delay mode and in the occupied mode through operator entered values. It shall be verified that supply fan starts. It shall be verified that the outside air and relief air dampers are closed, the return air damper is open, and the heating coil valve is under control, by artificially changing the space temperature through operator entered values. The system shall be placed out of the ventilation delay mode, and it shall be verified that the outside air, return air, and relief air dampers come under control by simulating a change in space temperature.

(2) The control system shall be placed in the minimum outside air mode. It shall be verified that the outside air damper opens to minimum position.

(3) The calibration accuracy check of sensing element-to-DDC system readout for the space temperature shall be performed. The space temperature setpoint shall be set as shown.

(4) The control system shall be placed in the unoccupied mode, and it shall be verified that the HVAC system shuts down, and the control system assumes the specified shutdown conditions. The space temperature shall be artificially changed to below the night setback setpoint, and it shall be verified that the HVAC system starts; the space temperature shall be artificially changed to above the night setback setpoint, and it shall be verified that the HVAC system stops. The night setback temperature setpoint shall be set as shown.

(5) With the HVAC system running, a filter differential pressure switch input signal shall be simulated, at the device. It shall be verified that the filter alarm is initiated. The differential pressure switch shall be set at the setpoint as shown.

(6) With the HVAC system running, a freezestat trip input signal shall be simulated at the device. HVAC system shutdown shall be verified. It shall be verified that a low temperature alarm is initiated. The freezestat shall be set at the setpoint. The HVAC system shall be restarted by manual restart and it shall be verified that the alarm returns to normal.

(7) With the HVAC system running, a smoke detector trip input signal shall be simulated at each detector, and verification of control device actions and interlock functions as described in the Sequence of Operation shall be made. Simulation shall be performed without false-alarming any Life Safety systems. It shall be verified that the HVAC system shuts down and that the smoke detector alarm is initiated. The detectors shall be reset. The HVAC system shall be restarted by manual reset, and it shall be verified that the alarm signal is changed to a return-to-normal signal.

3.5 BALANCING, COMMISSIONING, AND TESTING

3.5.1 Coordination with HVAC System Balancing

Commissioning of the control system, except for tuning of controllers, shall be performed prior to or simultaneous with HVAC system balancing. The contractor shall tune the HVAC control system after all air system and hydronic system balancing has been completed, minimum damper positions set and a report has been issued.

3.5.2 Control System Calibration, Adjustments, and Commissioning

Control system commissioning shall be performed for each HVAC system, using test plans and procedures previously approved by the Government. The Contractor shall provide all personnel, equipment, instrumentation, and supplies necessary to perform commissioning and testing of the HVAC control system. All instrumentation and controls shall be calibrated and the specified accuracy shall be verified using test equipment with calibration traceable to NIST standards. Wiring shall be tested for continuity and for ground, open, and short circuits. Tubing systems shall be tested for leaks. Mechanical control devices shall be adjusted to operate as specified. HVAC control panels shall be pretested off-site as a functioning assembly ready for field connections, calibration, adjustment, and commissioning of the operational HVAC control system. Control parameters and logic (virtual) points including control loop setpoints, gain constants, and integral constraints, shall be adjusted before the system is placed on line. Communications requirements shall be as indicated. Written notification of any planned commissioning or testing of the HVAC Control systems shall be given to the Government at least 14 calendar days in advance.

3.5.3 Performance Verification Test

The Contractor shall demonstrate compliance of the HVAC control system with the contract documents. Using test plans and procedures previously approved by the Government, the Contractor shall demonstrate all physical and functional requirements of the project. The performance verification test shall show, step-by-step, the actions and results demonstrating that the control systems perform in accordance with the sequences of operation. The performance verification test shall not be started until after receipt by the Contractor of written permission by the Government, based on Government approval of the Commissioning Report and completion of balancing. The tests shall not be conducted during scheduled seasonal off periods of base heating and cooling systems.

3.5.4 Endurance Test

The endurance test shall be used to demonstrate the specified overall system reliability requirement of the completed system. The endurance test shall not be started until the Government notifies the Contractor in writing that the performance verification test is satisfactorily completed. The Government may terminate the testing at any time when the system fails to perform as specified. Upon termination of testing by the Government or by the Contractor, the Contractor shall commence an assessment period as described for Phase II. Upon successful completion of the endurance test, the Contractor shall deliver test reports and other documentation as specified to the Government prior to acceptance of the system.

a. Phase I (Testing). The test shall be conducted 24 hours per day,

7 days per week, for 15 consecutive calendar days, including holidays, and the system shall operate as specified. The Contractor shall make no repairs during this phase of testing unless authorized by the Government in writing.

b. Phase II (Assessment). After the conclusion of Phase I, the Contractor shall identify failures, determine causes of failures, repair failures, and deliver a written report to the Government. The report shall explain in detail the nature of each failure, corrective action taken, results of tests performed, and shall recommend the point at which testing should be resumed. After delivering the written report, the Contractor shall convene a test review meeting at the jobsite to present the results and recommendations to the Government. As a part of this test review meeting, the Contractor shall demonstrate that all failures have been corrected by performing appropriate portions of the performance verification test. Based on the Contractor's report and test review meeting, the Government may require that the Phase I test be totally or partially rerun. After the conclusion of any retesting which the Government may require, the Phase II assessment shall be repeated as if Phase I had just been completed.

3.5.5 Posted and Panel Instructions

Posted and Panel Instructions, showing the final installed conditions, shall be provided for each system. The posted instructions shall consist of laminated half-size drawings and shall include the control system schematic, equipment schedule, sequence of operation, wiring diagram, communication network diagram, and valve and damper schedules. The posted instructions shall be permanently affixed, by mechanical means, to a wall near the control panel. Panel instructions shall consist of laminated letter-size sheets and shall include a Routine Maintenance Checklist and as-built configuration check sheets. Panel instructions and one copy of the Operation and Maintenance Manuals, previously described herein, shall be placed inside each control panel or permanently affixed, by mechanical means, to a wall near the panel.

3.6 TRAINING

3.6.1 Training Course Requirements

A training course shall be conducted for operating staff members designated by the Contracting Officer in the maintenance and operation of the system, including specified hardware and software. The training period, for a total of 32 hours of normal working time, shall be conducted within 30 days after successful completion of the performance verification test. The training course shall be conducted at the project site. Audiovisual equipment and 10 sets of all other training materials and supplies shall be provided. A training day is defined as 8 hours of classroom instruction, including two 15 minute breaks and excluding lunchtime, Monday through Friday, during the daytime shift in effect at the training facility.

3.6.2 Training Course Content

For guidance in planning the required instruction, the Contractor shall assume that attendees will have a high school education or equivalent, and are familiar with HVAC systems. The training course shall cover all of the material contained in the Operating and Maintenance Instructions, the layout and location of each HVAC control panel, the layout of one of each type of unitary equipment and the locations of each, the location of each

control device external to the panels, the location of the compressed air station, preventive maintenance, troubleshooting, diagnostics, calibration, adjustment, commissioning, tuning, and repair procedures. Typical systems and similar systems may be treated as a group, with instruction on the physical layout of one such system. The results of the performance verification test and the calibration, adjustment and commissioning report shall be presented as benchmarks of HVAC control system performance by which to measure operation and maintenance effectiveness.

-- End of Section --

SECTION 15990

TESTING, ADJUSTING, AND BALANCING OF HVAC SYSTEMS
08/97

PART 1 GENERAL

1.1 REFERENCES

The publications listed below form a part of this specification to the extent referenced. The publications are referred to in the text by basic designation only.

ASSOCIATED AIR BALANCE COUNCIL (AABC)

AABC MN-1	(1989) National Standards for Testing and Balancing Heating, Ventilating, and Air Conditioning Systems

NATIONAL ENVIRONMENTAL BALANCING BUREAU (NEBB)

NEBB Procedural Stds	(1991) Procedural Standards for Testing Adjusting Balancing of Environmental Systems

1.2 SUBMITTALS

Government approval is required for submittals with a "G" designation; submittals not having a "G" designation are for information only. When used, a designation following the "G" designation identifies the office that will review the submittal for the Government. The following shall be submitted in accordance with Section 01330 SUBMITTAL PROCEDURES:

SD-02 Shop Drawings

TAB Schematic Drawings and Report Forms; G

Three copies of the TAB Schematic Drawings and Report Forms, no later than 21 days prior to the start of TAB field measurements.

SD-03 Product Data

TAB Related HVAC Submittals

A list of the TAB Related HVAC Submittals, no later than 7 days after the approval of the TAB Specialist.

TAB Procedures; G

Proposed procedures for TAB, submitted with the TAB Schematic Drawings and Report Forms.

Calibration; G

List of each instrument to be used during TAB, stating calibration requirements required or recommended by both the TAB Standard and the instrument manufacturer and the actual

calibration history of the instrument, submitted with the TAB Procedures. The calibration history shall include dates calibrated, the qualifications of the calibration laboratory, and the calibration procedures used.

Systems Readiness Check; G

Proposed date and time to begin the Systems Readiness Check, no later than 7 days prior to the start of the Systems Readiness Check.

TAB Execution; G

Proposed date and time to begin field measurements, making adjustments, etc., for the TAB Report, submitted with the Systems Readiness Check Report.

TAB Verification; G

Proposed date and time to begin the TAB Verification, submitted with the TAB Report.

SD-06 Test Reports

Design Review Report; G

A copy of the Design Review Report, no later than 14 days after approval of the TAB Firm and the TAB Specialist.

Systems Readiness Check; G

A copy of completed checklists for each system, each signed by the TAB Specialist, at least 7 days prior to the start of TAB Execution. All items in the Systems Readiness Check Report shall be signed by the TAB Specialist and shall bear the seal of the Professional Society or National Association used as the TAB Standard.

TAB Report; G

Three copies of the completed TAB Reports, no later that 7 days after the execution of TAB. All items in the TAB Report shall be signed by the TAB Specialist and shall bear the seal of the Professional Society or National Association used as the TAB Standard.

TAB Verification Report; G

Three copies of the completed TAB Verification Report, no later than 7 days after the execution of TAB Verification. All items in the TAB Verification Report shall be signed by the TAB Specialist and shall bear the seal of the Professional Society or National Association used as the TAB Standard.

SD-07 Certificates

Ductwork Leak Testing

A written statement signed by the TAB Specialist certifying that

the TAB Specialist witnessed the Ductwork Leak Testing, it was successfully completed, and that there are no known deficiencies related to the ductwork installation that will prevent TAB from producing satisfactory results.

TAB Firm

Certification of the proposed TAB Firm's qualifications by either AABC or NEBB to perform the duties specified herein and in other related Sections, no later than 21 days after the Notice to Proceed. The documentation shall include the date that the Certification was initially granted and the date that the current Certification expires. Any lapses in Certification of the proposed TAB Firm or disciplinary action taken by AABC or NEBB against the proposed TAB Firm shall be described in detail.

TAB Specialist

Certification of the proposed TAB Specialist's qualifications by either AABC or NEBB to perform the duties specified herein and in other related Sections, no later than 21 days after the Notice to Proceed. The documentation shall include the date that the Certification was initially granted and the date that the current Certification expires. Any lapses in Certification of the proposed TAB Specialist or disciplinary action taken by AABC or NEBB against the proposed TAB Specialist shall be described in detail.

1.3 SIMILAR TERMS

In some instances, terminology differs between the Contract and the TAB Standard primarily because the intent of this Section is to use the industry standards specified, along with additional requirements listed herein to produce optimal results. The following table of similar terms is provided for clarification only. Contract requirements take precedent over the corresponding AABC or NEBB requirements where differences exist.

SIMILAR TERMS

Contract Term	AABC Term	NEBB Term
TAB Standard	National Standards for Testing and Balancing Heating, Ventilating, and Air Conditioning Systems	Procedural Standards for Testing Adjusting Balancing of Environmental Systems.
TAB Specialist	TAB Engineer	TAB Supervisor
Systems Readiness Check	Construction Phase Inspection	Field Readiness Check & Preliminary Field Procedures.

1.4 TAB STANDARD

TAB shall be performed in accordance with the requirements of the standard under which the TAB Firm's qualifications are approved, i.e., AABC MN-1or NEBB Procedural Stds, unless otherwise specified herein. All recommendations and suggested practices contained in the TAB Standard shall

be considered mandatory. The provisions of the TAB Standard, including checklists, report forms, etc., shall, as nearly as practical, be used to satisfy the Contract requirements. The TAB Standard shall be used for all aspects of TAB, including qualifications for the TAB Firm and Specialist and calibration of TAB instruments. Where the instrument manufacturer calibration recommendations are more stringent than those listed in the TAB Standard, the manufacturer's recommendations shall be adhered to. All quality assurance provisions of the TAB Standard such as performance guarantees shall be part of this contract. For systems or system components not covered in the TAB Standard, TAB procedures shall be developed by the TAB Specialist. Where new procedures, requirements, etc., applicable to the Contract requirements have been published or adopted by the body responsible for the TAB Standard used (AABC or NEBB), the requirements and recommendations contained in these procedures and requirements shall be considered mandatory.

1.5 QUALIFICATIONS

1.5.1 TAB Firm

The TAB Firm shall be either a member of AABC or certified by the NEBB and certified in all categories and functions where measurements or performance are specified on the plans and specifications, including TAB of environmental systems building systems commissioning. The certification shall be maintained for the entire duration of duties specified herein. If, for any reason, the firm loses subject certification during this period, the Contractor shall immediately notify the Contracting Officer and submit another TAB Firm for approval. Any firm that has been the subject of disciplinary action by either the AABC or the NEBB within the five years preceding Contract Award shall not be eligible to perform any duties related to the HVAC systems, including TAB. All work specified in this Section and in other related Sections to be performed by the TAB Firm shall be considered invalid if the TAB Firm loses its certification prior to Contract completion and must be performed by an approved successor. These TAB services are to assist the prime Contractor in performing the quality oversight for which it is responsible. The TAB Firm shall be a subcontractor of the prime Contractor, and shall report to and be paid by the prime Contractor.

1.5.2 TAB Specialist

The TAB Specialist shall be either a member of AABC or an experienced technician of the Firm certified by the NEBB. The certification shall be maintained for the entire duration of duties specified herein. If, for any reason, the Specialist loses subject certification during this period, the Contractor shall immediately notify the Contracting Officer and submit another TAB Specialist for approval. Any individual that has been the subject of disciplinary action by either the AABC or the NEBB within the five years preceding Contract Award shall not be eligible to perform any duties related to the HVAC systems, including TAB. All work specified in this Section and in other related Sections performed by the TAB Specialist shall be considered invalid if the TAB Specialist loses its certification prior to Contract completion and must be performed by the approved successor.

1.6 TAB SPECIALIST RESPONSIBILITIES

All TAB work specified herein and in related sections shall be performed under the direct guidance of the TAB Specialist. The TAB Specialist shall

participate in the commissioning process specified in Section 15995 COMMISSIONING OF HVAC SYSTEMS.

PART 2 PRODUCTS (Not Applicable)

PART 3 EXECUTION

3.1 DESIGN REVIEW

The TAB Specialist shall review the Contract Plans and Specifications and advise the Contracting Officer of any deficiencies that would prevent the HVAC systems from effectively operating in accordance with the sequence of operation specified or prevent the effective and accurate TAB of the system. The TAB Specialist shall provide a Design Review Report individually listing each deficiency and the corresponding proposed corrective action necessary for proper system operation.

3.2 TAB RELATED HVAC SUBMITTALS

The TAB Specialist shall prepare a list of the submittals from the Contract Submittal Register that relate to the successful accomplishment of all HVAC TAB. The submittals identified on this list shall be accompanied by a letter of approval signed and dated by the TAB Specialist when submitted to the Government. The TAB Specialist shall also ensure that the location and details of ports, terminals, connections, etc., necessary to perform TAB are identified on the submittals.

3.3 TAB SCHEMATIC DRAWINGS AND REPORT FORMS

A schematic drawing showing each system component, including balancing devices, shall be provided for each system. Each drawing shall be accompanied by a copy of all report forms required by the TAB Standard used for that system. Where applicable, the acceptable range of operation or appropriate setting for each component shall be included on the forms or as an attachment to the forms. The schematic drawings shall identify all testing points and cross reference these points to the report forms and procedures.

3.4 DUCTWORK LEAK TESTING

The TAB Specialist shall witness the Ductwork Leak Testing specified in Section 15895 AIR SUPPLY, DISTRIBUTION, VENTILATION, AND EXHAUST SYSTEM and approve the results as specified in Paragraph TAB RELATED HVAC SUBMITTALS.

3.5 TESTING, ADJUSTING, AND BALANCING

3.5.1 TAB Procedures

Step by step procedures for each measurement required during TAB Execution shall be provided. The procedures shall be oriented such that there is a separate section for each system. The procedures shall include measures to ensure that each system performs as specified in all operating modes, interactions with other components (such as exhaust fans, relief vents, etc.) and systems, and with all seasonal operating differences, diversity, simulated loads, and pressure relationships required.

Test, adjust, and balance the following mechanical systems:

1. Supply air systems, all pressure ranges; including variable volume

systems.
2. Return air systems.
3. Exhaust air systems.
4. Verify temperature control system operation.
5. Test systems for proper sound and vibration levels.
6. Fans running amperes and voltage in all three phases under full load conditions.

3.5.2 Systems Readiness Check

The TAB Specialist shall inspect each system to ensure that it is complete, including installation and operation of controls, and that all aspects of the facility that have any bearing on the HVAC systems, including installation of ceilings, walls, windows, doors, and partitions, are complete to the extent that TAB results will not be affected by any detail or touch-up work remaining. The TAB Specialist shall also verify that all items such as ductwork and piping ports, terminals, connections, etc., necessary to perform TAB shall be complete during the Systems Readiness Check.

3.5.3 Preparation of TAB Report

Preparation of the TAB Report shall begin only when the Systems Readiness Report has been completed. The Report shall be oriented so that there is a separate section for each system. The Report shall include a copy of the appropriate approved Schematic Drawings and TAB Related Submittals, such as pump curves, fan curves, etc., along with the completed report forms for each system. The operating points measured during successful TAB Execution and the theoretical operating points listed in the approved submittals shall be marked on the performance curves and tables. Where possible, adjustments shall be made using an "industry standard" technique which would result in the greatest energy savings, such as adjusting the speed of a fan instead of throttling the flow. Any deficiencies outside of the realm of normal adjustments and balancing during TAB Execution shall be noted along with a description of corrective action performed to bring the measurement into the specified range. If, for any reason, the TAB Specialist determines during TAB Execution that any Contract requirement cannot be met, the TAB Specialist shall immediately provide a written description of the deficiency and the corresponding proposed corrective action necessary for proper system operation to the Contracting Officer.

3.5.4 TAB Verification

The TAB Specialist shall recheck ten percent of the measurements listed in the Tab Report and prepare a TAB Verification Report. The measurements selected for verification and the individuals that witness the verification will be selected by the Contracting Officer's Representative (COR). The measurements will be recorded in the same manner as required for the TAB Report. All measurements that fall outside the acceptable operating range specified shall be accompanied by an explanation as to why the measurement does not correlate with that listed in the TAB Report and a description of corrective action performed to bring the measurement into the specified range. The TAB Specialist shall update the original TAB report to reflect any changes or differences noted in the TAB verification report and submit the updated TAB report. If over 20 percent of the measurements selected by the COR for verification fall outside of the acceptable operating range specified, the COR will select an additional ten percent for verification. If over 20 percent of the total tested (including both test groups) fall outside of the acceptable range, the TAB Report shall be considered invalid

and all contract TAB work shall be repeated beginning with the Systems Readiness Check.

3.5.5 Marking of Setting

Following approval of TAB Verification Report, the setting of all HVAC adjustment devices including valves, splitters, and dampers shall be permanently marked by the TAB Specialist so that adjustment can be restored if disturbed at any time.

3.5.6 Identification of Test Ports

The TAB Specialist shall permanently and legibly identify the location points of duct test ports. If the ductwork has exterior insulation, the identification shall be made on the exterior side of the insulation. All penetrations through ductwork and ductwork insulation shall be sealed to prevent air leakage or to maintain integrity of vapor barrier.

-- End of Section --

SECTION 15995

COMMISSIONING OF HVAC SYSTEMS
04/01

PART 1 GENERAL

1.1 SUBMITTALS

Government approval is required for submittals with a "G" designation; submittals not having a "G" designation are for information only. When used, a designation following the "G" designation identifies the office that will review the submittal for the Government. The following shall be submitted in accordance with Section 01330 SUBMITTAL PROCEDURES:

SD-03 Product Data

Commissioning Team; G

List of team members who will represent the Contractor in the pre-commissioning checks and functional performance testing, at least 2 weeks prior to the start of pre-commissioning checks. Proposed revision to the list, prior to the start of the impacted work.

Test Procedures; G

Detailed procedures for pre-commissioning checks and functional performance tests, at least 4 weeks prior to the start of pre-commissioning checks.

Test Schedule; G

Schedule for pre-commissioning checks and functional performance tests, at least 2 weeks prior to the start of pre-commissioning checks.

SD-06 Test Reports

Test Reports; G

Completed pre-commissioning checklists and functional performance test checklists organized by system and by subsystem and submitted as one package. The results of failed tests shall be included along with a description of the corrective action taken.

1.2 SEQUENCING AND SCHEDULING

The work described in this Section shall begin only after all work required in related Sections, including Section 15951 DIRECT DIGITAL CONTROL FOR HVAC and Section 15990 TESTING, ADJUSTING, AND BALANCING OF HVAC SYSTEMS, has been successfully completed, and all test and inspection reports and operation and maintenance manuals required in these Sections have been submitted and approved.Seismic details shall be in accordance with Section 15070 SEISMIC PROTECTION FOR MECHANICAL EQUIPMENT as indicated.

PART 2 PRODUCTS (Not Applicable)

PART 3 EXECUTION

3.1 COMMISSIONING TEAM AND CHECKLISTS

The Contractor shall designate team members to participate in the pre-commissioning checks and the functional performance testing specified herein. In addition, the Government will be represented by a representative of the Contracting Officer, and the Using Agency. The team members shall be as follows:

Designation	Function
Q	Contractor's Chief Quality Control Representative
M	Contractor's Mechanical Representative
E	Contractor's Electrical Representative
T	Contractor's Testing, Adjusting, and Balancing Representative
C	Contractor's Controls Representative
O	Contracting Officer's Representative
U	Using Agency's Representative

Each checklist shown in appendices A and B shall be completed by the commissioning team. Acceptance by each commissioning team member of each pre-commissioning checklist item shall be indicated by initials and date unless an "X" is shown indicating that participation by that individual is not required. Acceptance by each commissioning team member of each functional performance test checklist shall be indicated by signature and date.

3.2 TESTS

The pre-commissioning checks and functional performance tests shall be performed in a manner which essentially duplicates the checking, testing, and inspection methods established in the related Sections. Where checking, testing, and inspection methods are not specified in other Sections, methods shall be established which will provide the information required. Testing and verification required by this section shall be performed during the Commissioning phase. Requirements in related Sections are independent from the requirements of this Section and shall not be used to satisfy any of the requirements specified in this Section. The Contractor shall provide all materials, services, and labor required to perform the pre-commissioning checks and functional performance tests. A pre-commissioning check or functional performance test shall be aborted if any system deficiency prevents the successful completion of the test or if any participating non-Government commissioning team member of which participation is specified is not present for the test. The Contractor shall reimburse the Government for all costs associated with effort lost due to tests that are aborted. These costs shall include salary, travel costs and per diem (where applicable) for Government commissioning team members. Submit Test Procedures, Test Schedule, and Test Reports in accordance with 1.1 SUBMITTALS.

3.2.1 Pre-Commissioning Checks

Pre-commissioning checks shall be performed for the items indicated on the checklists in Appendix A. Deficiencies discovered during these checks

shall be corrected and retested in accordance with the applicable contract requirements.

3.2.2 Functional Performance Tests

Functional performance tests shall be performed for the items indicated on the checklists in Appendix B. Functional performance tests shall begin only after all pre-commissioning checks have been successfully completed. Tests shall prove all modes of the sequences of operation, and shall verify all other relevant contract requirements. Tests shall begin with equipment or components and shall progress through subsystems to complete systems. Upon failure of any functional performance test checklist item, the Contractor shall correct all deficiencies in accordance with the applicable contract requirements. The checklist shall then be repeated until it has been completed with no errors.

APPENDIX A

PRE-COMMISSIONING CHECKLISTS

Pre-commissioning checklist - Piping

For [_____] Piping System

Checklist Item	Q	M	E	T	C	O	U
Installation							
a. Piping complete.	___	___	X	___	X	___	___
b. As-built shop drawings submitted.	___	___	X	___	X	___	___
c. Piping flushed and cleaned.	___	___	X	___	X	___	___
d. Strainers cleaned.	___	___	X	___	X	___	___
e. Valves installed as required.	___	___	X	___	X	___	___
f. Piping insulated as required.	___	___	X	___	X	___	___
g. Thermometers and gauges installed as required.	___	___	X	___	X	___	___
h. Verify operation of valves.	___	___	X	___	___	___	___
i. Air vents installed as specified.	___	___	X	X	X	___	___
j. Flexible connectors installed as specified	___	___	X	X	X	___	___
k. Verify that piping has been labeled and valves identified as specified.	___	___	X	___	___	___	___
Testing, Adjusting, and Balancing (TAB)							
a. Hydrostatic test complete.	___	___	X	___	X	___	___
b. TAB operation complete.	___	___	X	___	___	___	___

Pre-commissioning Checklist - Ductwork

For Air Handler: [_____]

Checklist Item	Q	M	E	T	C	O	U
Installation							
a. Ductwork complete.	___	___	X	___	X	___	___
b. As-built shop drawings submitted.	___	___	X	___	X	___	___
c. Ductwork leak test complete.	___	___	X	___	X	___	___
d. Access doors installed as required with installation of each verified by the specified team members initialing each location on a copy of the as-built drawings.	___	___	X	___	X	___	___
e. Ductwork insulated as required.	___	___	X	___	X	___	___
f. Thermometers and gauges installed as required.	___	___	___	___	___	___	___
g. Verify open/closed status of dampers.	___	___	X	___	X	___	___
h. Flexible connectors installed as specified	___	___	X	___	X	___	___
Testing, Adjusting, and Balancing (TAB)							
a. TAB operation complete.	___	___	X	___	X	___	___

Pre-commissioning Checklist - Packaged Rooftop Unit

For Rooftop Unit: [_____]

Checklist Item	Q	M	E	T	C	O	U
Installation							
a. Vibration isolation devices installed [and freed to float with adequate movement and seismic restraint] as specified.	___	___	X	X	X	___	___
b. Inspection and access doors are operable and sealed.	___	___	X	___	X	___	___
c. Casing undamaged.	___	___	X	X	X	___	___
d. Insulation undamaged.	___	___	X	X	X	___	___
e. Gas piping installed.	___	___	X	X	X	___	___
f. Gas piping tested.	___	___	X	X	X	___	___
g. Condensate drainage is unobstructed. (Visually verify pan drains completely by pouring a cup of water into drain pan.)	___	___	X	X	X	___	___
h. Fan belt adjusted.	___	___	X	___	X	___	___
i. Check condenser fans for proper rotation.	___	___	X	___	X	___	___
j. Manufacturer's required maintenance clearance provided.	___	___	X	X	X	___	___
Electrical							
a. Power available to unit disconnect.	___	___	___	X	___	___	___
b. Power available to unit control panel.	___	___	___	X	___	___	___
c. Proper motor rotation verified.	___	___	___	___	X	___	___
d. Verify that power disconnect is located within sight of the unit it serves.	___	___	___	X	___	___	
Coils							
a. Any damage to coil fins has been repaired	___	___	X	___	X	___	___
Controls							
a. O.A. dampers/actuators properly installed.	___	___	X	___	___	___	___
b. O.A. dampers/actuators operable.	___	___	X	___	___	___	___
c. Unit safety/protection devices tested.	___	___	X	___	___	___	___

Pre-commissioning Checklist - Packaged Rooftop Unit

For Rooftop Unit: [_____]

Checklist Item	Q	M	E	T	C	O	U
d. Control system and interlocks installed.	___	___	X	___	___	___	___
e. Control system and interlocks operational.	___	___	X	___	___	___	___
f. Verify proper location and installation of thermostat.	___	___	X	___	___	___	___
Testing, Adjusting, and Balancing (TAB)							
a. Construction filters removed and replaced.	__	___	X	___	X	___	___
b. TAB report submitted.	___	___	X	___	X	___	___
c. TAB results within +10%/-0% of cfm shown on drawings							
d. TAB results for outside air intake within +10%/-0% of CFM shown on drawings.	___	___	X	___	X	___	___

Pre-commissioning Checklist - DX Air Cooled Condensing Unit

For Condensing Unit: [_____]

Checklist Item	Q	M	E	T	C	O	U
Installation	___	___	X	X	X	___	___
b. Refrigerant pipe leak tested.	___	___	X	X	X	___	___
c. Refrigerant pipe evacuated and charged in accordance with manufacturer's instructions.	___	___	X	X	X	___	____
d. Check condenser fans for proper rotation.	___	___	X	___	X	___	___
e. Any damage to coil fins has been repaired.	__	___	X	___	X	___	___
f. Manufacturer's required maintenance/ operational clearance provided.	___	___	X	X	X	___	___
Electrical							
a. Power available to unit disconnect.	___	___	___	X	X	___	___
b. Power available to unit control panel.	___	___	___	X	___	___	___
c. Verify that power disconnect is located within sight of the unit it controls	___	___	___	X	___	___	___
Controls							
a. Unit safety/protection devices tested.	___	___	X	X	___	___	___
b. Control system and interlocks installed.	___	___	X	X	___	___	___
c. Control system and interlocks operational.	__	___	X	X	___	___	___

Pre-commissioning Checklist - Unit Heater

For Unit Heater: [_____]

Checklist Item	Q	M	E	T	C	D	O	U
Installation								
a. Manufacturer's required maintenance/ operational clearance provided.	___	___	X	X	X	___	___	
Electrical								
a. Power available to unit disconnect.	___	___	___	X	___	___	___	
b. Proper motor rotation verified.	___	___	___	X	X	___	___	
c. Verify that power disconnect is located within sight of the unit it controls.	___	___	___	X	___	___	___	
d. Power available to electric heating coil.	___	___	___	X	___	___	___	
Controls								
a. Verify proper location and installation of thermostat.	___	___	X	___	___	___	___	
Testing, Adjusting, and Balancing (TAB)								
a. TAB Report submitted.	___	___	X	___	X	___	___	

Pre-commissioning Checklist - Exhaust Fan

For Exhaust Fan: [_____]

Checklist Item	Q	M	E	T	C	O	U
Installation							
a. Fan belt adjusted.	___	___	X	___	X	___	___
Electrical							
a. Power available to fan disconnect.	___	___	___	X	___	___	___
b. Proper motor rotation verified.	___	___	___	___	X	___	___
c. Verify that power disconnect is located within sight of the unit it controls.	___	___	___	X	___	___	___
Controls							
a. Control interlocks properly installed.	___	___	___	X	___	___	___
b. Control interlocks operable.	___	___	___	X	___	___	___
c. Dampers/actuators properly installed.	___	___	X	___	___	___	___
d. Dampers/actuators operable.	___	___	X	___	___	___	___
e. Verify proper location and installation of thermostat.	___	___	X	___	___	___	___
Testing, Adjusting, and Balancing (TAB)							
a. TAB results +10%/-0% to cfm shown on drawings	___	___	X	___	X	___	___
b. TAB Report submitted.	___	___	X	___	X	___	___

Pre-commissioning Checklist - Computer Room Unit

For Computer Room Unit: [_____]

Checklist Item	Q	M	E	T	C	O	U
Installation							
a. Unit properly supported.	___	___	X	X	X	___	___
b. Access doors are operable and sealed.	___	___	X	___	X	___	___
c. Casing undamaged.	___	___	X	X	X	___	___
d. Insulation undamaged.	___	___	X	X	X	___	___
e. Condensate drainage is unobstructed and routed to floor drain.	___	___	X	X	X	___	___
f. Fan belt adjusted.	___	___	X	___	X	___	___
g. Manufacturer's required maintenance operational clearance provided.	___	___	X	X	X	___	___
Electrical							
a. Power available to unit disconnect.	___	___	___	X	X	___	___
b. Proper motor rotation verified.	___	___	___	___	X	___	___
c. Proper motor rotation verified.	___	___	___	___	X	___	___
d. Verify that power disconnect is located within sight of the unit it controls.	___	___	___	X	___	___	___
e. Power available to reheat coils.	___	___	___	___	X	___	___
Coils/Humidifier							
a. Refrigerant piping properly connected.	___	___	X	X	X	___	___
b. Refrigerant piping pressure tested.	___	___	X	X	X	___	___
c. Humidifier makeup water connected.	___	___	X	X	X	___	___
Controls							
a. Control valves operable.	___	___	X	X	___	___	___
b. Unit control system operable and verified	___	___	___	X	___	___	___
c. Verify proper location and installation of thermostat.	___	___	X	___	___	___	___
Testing, Adjusting, and Balancing (TAB)							
a. Construction filters removed and replaced	___	___	X	___	X	___	___

Pre-commissioning Checklist - Computer Room Unit

For Computer Room Unit: [_____]

Checklist Item	Q	M	E	T	C	O	U
b. TAB results +10%/-0% cfm shown on drawings.	___	___	X	___	X	___	___
c. TAB Report submitted.	___	___	X	___	X	___	___

Pre-commissioning Checklist - HVAC System Controls

For HVAC System: [_____]

Checklist Item	Q	M	E	T	C	O	U
Installation							
a. As-built shop drawings submitted.	___	___	X	X	___	___	___
b. Layout of control panel matches drawings.	___	___	X	X	___	___	___
c. Framed instructions mounted in or near control panel.	___	___	X	X	___	___	___
d. Components properly labeled (on inside and outside of panel).	___	___	X	X	___	___	___
e. Control components piped and/or wired to each labeled terminal strip.	___	___	X	X	___	___	___
f. EMCS connection made to each labeled terminal strip as shown.	___	___	X	X	___	___	___
g. Control wiring and tubing labeled at all terminations, splices, and junctions.	___	___	X	X	___	___	___
h. Shielded wiring used on electronic sensors.	__	__	X	X	___	___	___
i. Air dryer installed as specified.	___	___	X	X	___	___	___
j. Water drain installed as specified.	___	___	X	X	___	___	___
Main Power							
a. 110 volt AC power available to panel.	___	___	___	X	___	___	___
Testing, Commissioning, and Balancing							
a. Testing, Commissioning, and Balancing Report submitted.	___	___	X	___	___	___	___

APPENDIX B

FUNCTIONAL PERFORMANCE TESTS CHECKLISTS

Functional Performance Test Checklist - Packaged Rooftop Unit

For Rooftop Unit: [_____]

Ensure that a slight negative pressure exists on inboard side of the outside air dampers throughout the operation of the dampers. Modulate OA, RA, and EA dampers from fully open to fully closed positions.

1. Functional Performance Test: Contractor shall verify operation of rooftop unit as per specification including the following:

a. The following shall be verified when the unit operating mode is initiated:

(1) All dampers in normal position. _____

(2) System safeties allow start if safety conditions are met. _____

(3) Verify cooling and heating operation by varying thermostat set point from space set point to space set point plus 10 degrees, spare set point minus 10 degrees, and returning to space set point.

(4) Verify that airflow is within +10/-10 percent of design airflow.

b. Occupied mode of operation - economizer de-energized.

(1) Outside air damper at minimum position. _____

(2) Return air damper open. _____

(3) Relief air damper at minimum position. _____

c. Occupied mode of operation - economizer energized.

(1) Outside air damper modulates to maintain mixed air temperature set point. _____

(2) Relief air damper modulates with outside air damper according to sequence of operation. _____

d. Unoccupied mode of operation

(1) All dampers in normal position. _____

(2) Verify low limit space temperature is maintained as specified in sequence of operation. _____

e. The following shall be verified when the unit off mode is initiated:

(1) All dampers in normal position. _____

(2) Fan de-energizes. _____

f. Verify safety shut down initiated by smoke detectors. _____

g. Verify safety shut down initiated by low temperature protection thermostat. _____

Functional Performance Test Checklist - Packaged Rooftop Unit

For Rooftop Unit: [_____]

h. Index room thermostats to full cooling then to full heating. Measure and record supply air and return air temperatures and determine damper leakage for a minimum of 2 zones.

Supply air temperature _____ degrees F
Return air temperature _____ degrees F

2. Certification: We the undersigned have witnessed the above functional performance tests and certify that the item tested has met the performance requirements in this section of the specifications.

Signature and Date

Contractor's Chief Quality Control Representative _____

Contractor's Mechanical Representative _____

Contractor's Electrical Representative _____

Contractor's Testing, Adjusting and Balancing Representative _____

Contractor's Controls Representative _____

Contracting Officer's Representative _____

Using Agency's Representative _____

Functional Performance Test Checklist - Air Cooled Condensing Unit

For Condensing Unit: [_____]

1. Functional Performance Test: Contractor shall demonstrate operation of refrigeration system as per specifications including the following: Start building air handler to provide load for condensing unit. Activate controls system start sequence as follows.

a. Start air handling unit. Verify control system energizes condensing unit start sequence. _____

b. Shut off air handling equipment to verify condensing unit de-energizes. _____

c. Restart air handling equipment one minute after condensing unit shut down. Verify condensing unit restart sequence. _____

2. Verify condensing unit amperage each phase and voltage phase to phase and phase to ground.

	PHASE 1	PHASE 2	PHASE 3
Amperage	_____	_____	_____
Voltage	_____	_____	
Voltage	_____		
Voltage to ground	_____	_____	_____

3. Record the following information:

Ambient dry bulb temperature	_____	degrees F
Ambient wet bulb temperature	_____	degrees F
Suction pressure	_____	psig
Discharge pressure	_____	psig

4. Unusual vibration, noise, etc.

_____

_____

5. Certification: We the undersigned have witnessed the above functional performance tests and certify that the item tested has met the performance requirements in this section of the specifications.

Signature and Date

Contractor's Chief Quality Control Representative _____

Contractor's Mechanical Representative _____

Contractor's Electrical Representative Representative _____

Contractor's Testing, Adjusting and Balancing _____

Functional Performance Test Checklist - Air Cooled Condensing Unit

For Condensing Unit: [_____]

Contractor's Controls Representative _____

Contracting Officer's Representative _____

Using Agency's Representative _____

Functional Performance Test Checklist - Unit Heaters

The Contracting Officer will select unit heaters to be spot-checked during the functional performance test. The number of terminals shall not exceed 10.

1. Functional Performance Test: Contractor shall demonstrate operation of selected unit heaters as per specifications including the following:

a. Verify unit heater response to room temperature set point adjustment. Changes to be heating set point to heating set point minus 10 degrees and return to heating set point. _____

b. Check blower fan speed. _____rpm

c. Check heating mode inlet air temperature. _____ degrees F

d. Check heating mode outlet air temperature. _____ degrees F

2. Certification: We the undersigned have witnessed the above functional performance tests and certify that the item tested has met the performance requirements in this section of the specifications.

Signature and Date

Contractor's Chief Quality Control Representative _____

Contractor's Mechanical Representative _____

Contractor's Electrical Representative _____

Contractor's Testing, Adjusting and Balancing Representative _____

Contractor's Controls Representative _____

Contracting Officer's Representative _____

Using Agency's Representative _____

Functional Performance Test Checklist - HVAC Controls

For HVAC System: [_____]

The Contracting Officer will select HVAC control systems to undergo functional performance testing. The number of systems shall not exceed 10.

1. Functional Performance Test: Contractor shall verify operation of HVAC controls by performing the following tests:

a. Verify that controller is maintaining the set point by manually measuring the controlled variable with a thermometer, sling psychrometer, inclined manometer, etc.

b. Verify sensor/controller combination by manually measuring the controlled medium. Take readings from control panel display and compare readings taken manually. Record all readings.

Sensor _____
Manual measurement _____
Panel reading value _____

c. Verify system stability by changing the controller set point as follows:

(1) Air temperature - 10 degrees F

(2) Water temperature - 10 degrees F

(3) Static pressure - 10 percent of set point

(4) Relative humidity - percent (RH)

The control system shall be observed for 10 minutes after the change in set point. Instability or excessive hunting will be unacceptable.

d. Verify interlock with other HVAC controls.

e. Verify interlock with fire alarm control panel.

f. Verify interlock with DDC System.

g. Change controller set point 10 percent with DDC System and verify correct response.

2. Verify that operation of control system conforms to that specified in the sequence of operation.

3. Certification: We the undersigned have witnessed the above functional performance tests and certify that the item tested has met the performance requirements in this section of the specifications.

Signature and Date

Contractor's Chief Quality Control Representative _____

Contractor's Mechanical Representative _____

Functional Performance Test Checklist - HVAC Controls

For HVAC System: [_____]

Contractor's Electrical Representative _____

Contractor's Testing, Adjusting and Balancing Representative _____

Contractor's Controls Representative _____

Contractor's Officer's Representative _____

Using Agency's Representative _____

Functional Performance Test Checklist - Computer Room Unit

For Computer Room Unit: [_____]

1. Functional Performance Test: Contractor shall verify operation of computer room unit as per specification including the following:

a. System safeties allow start if safety conditions are met. _____

b. Verify cooling and heating operation by varying thermostat set point from space set point to space set point plus 10 degrees, space set point minus 10 degrees, and returning to space set point. _____

c. Verify humidifier operation by varying humidistat set point from space set point to space set point plus 20 percent RH, and returning to space set point. _____

d. Verify that airflow is within +10/-0 percent of design airflow. _____

e. Verify unit shut down during fire event initiated by smoke/heat sensors. _____

2. Certification: We the undersigned have witnessed the above functional performance tests and certify that the item tested has met the performance requirements in this section of the specifications.

Signature and Date

Contractor's Chief Quality Control Representative _____

Contractor's Mechanical Representative _____

Contractor's Electrical Representative _____

Contractor's Testing, Adjusting and Balancing Representative _____

Contractor's Controls Representative _____

Contracting Officer's Representative _____

Using Agency's Representative _____

-- End of Section --

SECTION 16050

BASIC ELECTRICAL MATERIALS AND METHODS
02/01

PART 1 GENERAL

1.1 REFERENCES

The publications listed below form a part of this specification to the extent referenced. The publications are referred to in the text by the basic designation only.

AMERICAN SOCIETY FOR TESTING AND MATERIALS (ASTM)

ASTM D709	(2000) Laminated Thermosetting Materials

U.S. NATIONAL ARCHIVES AND RECORDS ADMINISTRATION (NARA)

29 CFR 1910.147	Control of Hazardous Energy (Lock Out/Tag Out)

INSTITUTE OF ELECTRICAL AND ELECTRONICS ENGINEERS (IEEE)

IEEE 100	(1996) Dictionary of Electrical and Electronics Terms (ANSI/IEEE)
IEEE C2	(1997) National Electrical Safety Code (ANSI/IEEE)

NATIONAL ELECTRICAL MANUFACTURERS ASSOCIATION (NEMA)

NEMA C57.12.28	(1999) Pad-Mounted Equipment - Enclosure Integrity (Revision of ANSI C57.12.28-88)
NEMA ICS 6	(1993) Industrial Control and Systems Enclosures
NEMA MG 1	(1998; Errata 1999) Motors and Generators
NEMA MG 10	(1994) Energy Management Guide for Selection and Use of Fixed Frequency Medium AC Squirrel-Cage Polyphase Induction Motors
NEMA MG 11	(1977; R 1992) Energy Management Guide for Selection and Use of Single-Phase Motors

NATIONAL FIRE PROTECTION ASSOCIATION (NFPA)

NFPA 70	(1999) National Electrical Code

1.2 RELATED REQUIREMENTS

This section applies to certain sections of Division 2, "Site Construction," Division 11, "Equipment," Division 13, "Special Construction," and Division 14, "Conveying Systems" and Division 15, "Mechanical". This section applies to all sections of Division 16,

"Electrical," of this project specification unless specified otherwise in the individual sections.

1.3 DEFINITIONS

a. Unless otherwise specified or indicated, electrical and electronics terms used in these specifications, and on the drawings, shall be as defined in IEEE 100.

b. The technical sections referred to herein are those specification sections that describe products, installation procedures, and equipment operations and that refer to this section for detailed description of submittal types.

c. The technical paragraphs referred to herein are those paragraphs in PART 2 - PRODUCTS and PART 3 - EXECUTION of the technical sections that describe products, systems, installation procedures, equipment, and test methods.

1.4 ELECTRICAL CHARACTERISTICS

Electrical characteristics for this project shall be 22 kV primary, three phase, three wire, 60 Hz, and 208Y/120 volts secondary, three phase, four wire. Final connections to the power distribution system at the existing shall be made by the Contractor as directed by the Contracting Officer.

1.5 SUBMITTALS

Submittals required in the sections which refer to this section shall conform to the requirements of Section 01330, "Submittal Procedures" and to the following additional requirements. Submittals shall include the manufacturer's name, trade name, place of manufacture, catalog model or number, nameplate data, size, layout dimensions, capacity, project specification and technical paragraph reference. Submittals shall also include applicable federal, military, industry, and technical society publication references, and years of satisfactory service, and other information necessary to establish contract compliance of each item to be provided. Photographs of existing installations are unacceptable and will be returned without approval.

1.5.1 Manufacturer's Catalog Data

Submittals for each manufactured item shall be current manufacturer's descriptive literature of cataloged products, equipment drawings, diagrams, performance and characteristic curves, and catalog cuts. Handwritten and typed modifications and other notations not part of the manufacturer's preprinted data will result in the rejection of the submittal. Should manufacturer's data require supplemental information for clarification, the supplemental information shall be submitted as specified for certificates of compliance.

1.5.2 Drawings

Submit drawings a minimum of 14 by 20 inches in size using a minimum scale of 1/8 inch per foot. Include wiring diagrams and installation details of equipment indicating proposed location, layout and arrangement, control panels, accessories, piping, ductwork, and other items that must be shown to ensure a coordinated installation. Wiring diagrams shall identify circuit terminals and indicate the internal wiring for each item of

equipment and the interconnection between each item of equipment. Drawings shall indicate adequate clearance for operation, maintenance, and replacement of operating equipment devices.

1.5.3 Instructions

Where installation procedures or part of the installation procedures are required to be in accordance with manufacturer's instructions, submit printed copies of those instructions prior to installation. Installation of the item shall not proceed until manufacturer's instructions are received. Failure to submit manufacturer's instructions shall be cause for rejection of the equipment or material.

1.5.4 Certificates

Submit manufacturer's certifications as required for products, materials, finishes, and equipment as specified in the technical sections. Certificates from material suppliers are not acceptable. Preprinted certifications and copies of previously submitted documents will not be acceptable. The manufacturer's certifications shall name the appropriate products, equipment, or materials and the publication specified as controlling the quality of that item. Certification shall not contain statements to imply that the item does not meet requirements specified, such as "as good as"; "achieve the same end use and results as materials formulated in accordance with the referenced publications"; or "equal or exceed the service and performance of the specified material." Certifications shall simply state that the item conforms to the requirements specified. Certificates shall be printed on the manufacturer's letterhead and shall be signed by the manufacturer's official authorized to sign certificates of compliance.

1.5.4.1 Reference Standard Compliance

Where equipment or materials are specified to conform to industry and technical society reference standards of the organizations such as American National Standards Institute (ANSI), American Society for Testing and Materials (ASTM), National Electrical Manufacturers Association (NEMA), Underwriters Laboratories (UL), and Association of Edison Illuminating Companies (AEIC), submit proof of such compliance. The label or listing by the specified organization will be acceptable evidence of compliance.

1.5.4.2 Independent Testing Organization Certificate

In lieu of the label or listing, submit a certificate from an independent testing organization, competent to perform testing, and approved by the Contracting Officer. The certificate shall state that the item has been tested in accordance with the specified organization's test methods and that the item complies with the specified organization's reference standard.

1.5.5 Operation and Maintenance Manuals

Comply with the requirements of Section 01781, "Operation and Maintenance Data" and the technical sections.

1.5.5.1 Operating Instructions

Submit text of posted operating instructions for each system and principal item of equipment as specified in the technical sections.

1.6 QUALITY ASSURANCE

1.6.1 Material and Equipment Qualifications

Provide materials and equipment that are products of manufacturers regularly engaged in the production of such products which are of equal material, design and workmanship. Products shall have been in satisfactory commercial or industrial use for 2 years prior to bid opening. The 2-year period shall include applications of equipment and materials under similar circumstances and of similar size. The product shall have been on sale on the commercial market through advertisements, manufacturers' catalogs, or brochures during the 2-year period. Where two or more items of the same class of equipment are required, these items shall be products of a single manufacturer; however, the component parts of the item need not be the products of the same manufacturer unless stated in the technical section.

1.6.2 Regulatory Requirements

Equipment, materials, installation, and workmanship shall be in accordance with the mandatory and advisory provisions of NFPA 70.

1.6.3 Alternative Qualifications

Products having less than a 2-year field service record will be acceptable if a certified record of satisfactory field operation for not less than 6000 hours, exclusive of the manufacturers' factory or laboratory tests, is furnished.

1.6.4 Service Support

The equipment items shall be supported by service organizations which are reasonably convenient to the equipment installation in order to render satisfactory service to the equipment on a regular and emergency basis during the warranty period of the contract.

1.6.5 Manufacturer's Nameplate

Each item of equipment shall have a nameplate bearing the manufacturer's name, address, model number, and serial number securely affixed in a conspicuous place; the nameplate of the distributing agent will not be acceptable.

1.6.6 Modification of References

In each of the publications referred to herein, consider the advisory provisions to be mandatory, as though the word, "shall" had been substituted for "should" wherever it appears. Interpret references in these publications to the "authority having jurisdiction," or words of similar meaning, to mean the Contracting Officer.

1.6.7 Material and Equipment Manufacturing Date

Products manufactured more than 3 years prior to date of delivery to site shall not be used, unless specified otherwise.

1.7 POSTED OPERATING INSTRUCTIONS

Provide for each system and principal item of equipment as specified in the technical sections for use by operation and maintenance personnel. The

operating instructions shall include the following:

a. Wiring diagrams, control diagrams, and control sequence for each principal system and item of equipment.

b. Start up, proper adjustment, operating, lubrication, and shutdown procedures.

c. Safety precautions.

d. The procedure in the event of equipment failure.

e. Other items of instruction as recommended by the manufacturer of each system or item of equipment.

Print or engrave operating instructions and frame under glass or in approved laminated plastic. Post instructions where directed. For operating instructions exposed to the weather, provide weather-resistant materials or weatherproof enclosures. Operating instructions shall not fade when exposed to sunlight and shall be secured to prevent easy removal or peeling.

1.8 NAMEPLATES

ASTM D709. Provide laminated plastic nameplates for each panelboard, equipment enclosure, relay, switch, and device; as specified in the technical sections or as indicated on the drawings. Each nameplate inscription shall identify the function and, when applicable, the position. Nameplates shall be melamine plastic, 0.125 inch thick, white with black center core. Provide red laminated plastic label with white center core where indicated. Surface shall be matte finish. Corners shall be square. Accurately align lettering and engrave into the core. Minimum size of nameplates shall be one by 2.5 inches. Lettering shall be a minimum of 0.25 inch high normal block style.

1.9 WARNING SIGNS

Provide warning signs for the enclosures of electrical equipment including substations, pad-mounted transformers, pad-mounted switches, generators, and switchgear having a nominal rating exceeding 600 volts.

a. When the enclosure integrity of such equipment is specified to be in accordance with NEMA C57.12.28, such as for pad-mounted transformers and pad-mounted SF6 switches, provide self-adhesive warning signs on the outside of the high voltage compartment door(s). Sign shall be a decal and shall have nominal dimensions of 7 by 10 inches with the legend "DANGER HIGH VOLTAGE" printed in two lines of nominal 2 inch high letters. The word "DANGER" shall be in white letters on a red background and the words "HIGH VOLTAGE" shall be in black letters on a white background. Decal shall be Panduit No. PPSO710D72 or approved equal.

b. When such equipment is guarded by a fence, mount signs on the fence. Provide metal signs having nominal dimensions of 14 by 10 inches with the legend "DANGER HIGH VOLTAGE KEEP OUT" printed in three lines of nominal 3 inch high white letters on a red and black field.

1.10 CABLE TAGS IN MANHOLES, HANDHOLES, AND VAULTS

Provide tags for each cable or wire located in manholes, handholes, and vaults. Tag new wire and cable provided under this contract and existing wire and cable which are indicated to have splices and terminations provided by this contract. Do not provide handwritten letters. As an example, a tag could have the following designation: "11.5 NAS 1-8(Phase A)500," denoting that the tagged cable is on the 11.5kV system circuit number NAS 1-8, underground, Phase A, sized at 500 kcmil.

1.10.1 Polyethylene Cable Tags

Provide tags of polyethylene that have an average tensile strength of 3250 pounds per square inch; and that are 0.08 inch thick (minimum), non-corrosive non-conductive; resistive to acids, alkalis, organic solvents, and salt water; and distortion resistant to 170 degrees F. Provide 0.05 inch (minimum) thick black polyethylene tag holder. Provide a one-piece nylon, self-locking tie at each end of the cable tag. Ties shall have a minimum loop tensile strength of 175 pounds. The cable tags shall have black block letters, numbers, and symbols one inch high on a yellow background. Letters, numbers, and symbols shall not fall off or change positions regardless of the cable tags' orientation.

1.11 ELECTRICAL REQUIREMENTS

Electrical installations shall conform to IEEE C2, NFPA 70, and requirements specified herein.

1.11.1 Motors and Equipment

Provide electrical components of mechanical equipment, such as motors, motor starters, control or push-button stations, float or pressure switches, solenoid valves, and other devices functioning to control mechanical equipment, including control wiring and conduit for circuits rated 100 volts or less, to conform with the requirements of the section covering the mechanical equipment. Extended voltage range motors shall not be permitted. The interconnecting power wiring and conduit, control wiring rated 120 volts (nominal) and conduit, the motor control equipment forming a part of motor control centers, and the electrical power circuits shall be provided under Division 16.

Provide motors, controllers, integral disconnects, and contactors with their respective pieces of equipment, except controllers indicated as part of the motor control centers shall be provided under Section 16415, "Electrical Work, Interior". Motors, controllers, integral disconnects, and contactors shall conform to Section 16415, "Electrical Work, Interior". Extended voltage range motors shall not be permitted. Control voltage for controllers and contactors shall not exceed 120 volts nominal. When motors and equipment furnished are larger than sizes indicated, the cost of additional electrical service and related work shall be included under the section that specified that motor or equipment. Where fuse protection is specifically recommended by the equipment manufacturer, provide fused switches in lieu of non-fused switches indicated.

1.11.2 Wiring and Conduit

Provide internal wiring for components of packaged equipment as an integral part of the equipment. Provide power wiring and conduit for field-installed equipment, and motor control equipment forming part of motor control centers or switchgear assemblies, the conduit and wiring

connecting such centers, assemblies, or other power sources to equipment under Section 16415, "Electrical Work, Interior." Power wiring and conduit shall conform to Section 16415, "Electrical Work, Interior." Control wiring and conduit shall be provided under, and conform to the requirements of the section specifying the associated equipment.

1.11.3 High Efficiency Motors

1.11.3.1 High Efficiency Single-Phase Motors

Unless otherwise specified, single-phase fractional-horsepower alternating-current motors shall be high efficiency types corresponding to the applications listed in NEMA MG 11.

1.11.3.2 High Efficiency Polyphase Motors

Unless otherwise specified, polyphase motors shall be selected based on high efficiency characteristics relative to the applications as listed in NEMA MG 10. Additionally, polyphase squirrel-cage medium induction motors with continuous ratings shall meet or exceed energy efficient ratings in accordance with Table 12-10 of NEMA MG 1.

1.11.4 Three-Phase Motor Protection

Provide controllers for motors rated 1-hp and above with electronic phase-voltage monitors designed to protect motors from phase-loss, undervoltage, and overvoltage. Provide protection for motors from immediate restart by a time adjustable restart relay.

1.12 INSTRUCTION TO GOVERNMENT PERSONNEL

Where specified in the technical sections, furnish the services of competent instructors to give full instruction to designated Government personnel in the adjustment, operation, and maintenance of the specified systems and equipment, including pertinent safety requirements as required. Instructors shall be thoroughly familiar with all parts of the installation and shall be trained in operating theory as well as practical operation and maintenance work. Instruction shall be given during the first regular work week after the equipment or system has been accepted and turned over to the Government for regular operation. The number of man-days (8 hours per day) of instruction furnished shall be as specified in the individual section. When more than 4 man-days of instruction are specified, use approximately half of the time for classroom instruction. Use other time for instruction with equipment or system. When significant changes or modifications in the equipment or system are made under the terms of the contract, provide additional instructions to acquaint the operating personnel with the changes or modifications.

1.13 LOCKOUT REQUIREMENTS

Provide disconnecting means capable of being locked out for machines and other equipment to prevent unexpected startup or release of stored energy in accordance with 29 CFR 1910.147. Mechanical isolation of machines and other equipment shall be in accordance with requirements of Division 15, "Mechanical."

PART 2 PRODUCTS

Not used.

PART 3 EXECUTION

3.1 PAINTING OF EQUIPMENT

3.1.1 Factory Applied

Electrical equipment shall have factory-applied painting systems which shall, as a minimum, meet the requirements of NEMA ICS 6 corrosion-resistance test and the additional requirements specified in the technical sections.

3.1.2 Field Applied

Paint electrical equipment as required to match finish of adjacent surfaces or to meet the indicated or specified safety criteria. Painting shall be as specified in Section 09900, "Paints and Coatings."

3.2 NAMEPLATE MOUNTING

Provide number, location, and letter designation of nameplates as indicated. Fasten nameplates to the device with a minimum of two sheet-metal screws or two rivets.

3.3 WARNING SIGN MOUNTING

Provide the number of signs required to be readable from each accessible side, but space the signs a maximum of 30 feet apart.

3.4 CABLE TAG INSTALLATION

Install cable tags in each manhole, handhole, and vault as specified, including each splice. Install cable tags over the fireproofing, if any, and locate the tags so that they are clearly visible without disturbing any cabling or wiring in the manholes, handholes, and vaults.

-- End of Section --

SECTION 16375

ELECTRICAL DISTRIBUTION SYSTEM, UNDERGROUND
02/02

PART 1 GENERAL

1.1 REFERENCES

The publications listed below form a part of this specification to the extent referenced. The publications are referred to in the text by basic designation only.

AMERICAN NATIONAL STANDARDS INSTITUTE (ANSI)

ANSI C119.1	(1986; R 1997) Sealed Insulated Underground Connector Systems Rated 600 Volts
ANSI C12.11	(1987; R 1993) Instrument Transformers for Revenue Metering, 10 kV BIL through 350 kV BIL (0.6 kV NSV through 69 kV NSV)
ANSI C29.1	(1988; R 1996) Electrical Power Insulators - Test Methods
ANSI C37.46	(1981; R 1992) Power Fuses and Fuse Disconnecting Switches
ANSI C57.12.21	(1995) Requirements for Pad-Mounted, Compartmental-Type, Self-Cooled, Single-Phase Distribution Transformers with High-Voltage Bushings; (High-Voltage, 34 500 Grd Y/19 920 Volts and Below; Low-Voltage, 240/120; 167 kVA and Smaller)
ANSI C57.12.26	(1993) Pad-Mounted Compartmental-Type, Self-Cooled, Three-Phase Distribution Transformers for Use with Separable Insulated High-Voltage Connectors, High-Voltage, 34 500 Grd Y/19 920 Volts and Below; 2500 kVA and Smaller
ANSI C80.1	(1995) Rigid Steel Conduit - Zinc Coated
ANSI O5.1	(1992) Specifications and Dimensions for Wood Poles

AMERICAN SOCIETY FOR TESTING AND MATERIALS (ASTM)

ASTM A 123/A 123M	(2001) Zinc (Hot-Dip Galvanized) Coatings on Iron and Steel Products
ASTM A 153/A 153M	(2001) Zinc Coating (Hot-Dip) on Iron and Steel Hardware
ASTM A 48	(1994ae1) Gray Iron Castings

ASTM B 117	(1997) Operating Salt Spray (Fog) Apparatus
ASTM B 3	(1995) Soft or Annealed Copper Wire
ASTM B 496	(1999) Compact Round Concentric-Lay-Stranded Copper Conductors
ASTM B 8	(1999) Concentric-Lay-Stranded Copper Conductors, Hard, Medium-Hard, or Soft
ASTM C 478	(1997) Precast Reinforced Concrete Manhole Sections
ASTM C 478M	(1997) Precast Reinforced Concrete Manhole Sections (Metric)
ASTM D 1654	(1992) Evaluation of Painted or Coated Specimens Subjected to Corrosive Environments
ASTM D 4059	(1996) Analysis of Polychlorinated Biphenyls in Insulating Liquids by Gas Chromatography
ASTM D 923	(1997) Sampling Electrical Insulating Liquids

ASSOCIATION OF EDISON ILLUMINATING COMPANIES (AEIC)

AEIC CS5	(1994; CS5a-1995) Cross-Linked Polyethylene Insulated Shielded Power Cables Rated 5 Through 46 kV
AEIC CS6	(1996) Ethylene Propylene Rubber Insulated Shielded Power Cables Rated 5 Through 69 kV

FACTORY MUTUAL ENGINEERING AND RESEARCH (FM)

FM P7825a	(1998) Approval Guide Fire Protection

INSTITUTE OF ELECTRICAL AND ELECTRONICS ENGINEERS (IEEE)

IEEE C2	(1997) National Electrical Safety Code
IEEE C37.2	(1996) Electrical Power System Device Function Numbers and Contact Designations
IEEE C37.20.1	(1993) Metal-Enclosed Low-Voltage Power Circuit-Breaker Switchgear
IEEE C37.20.2	(1993; C37.20.2b) Metal-Clad and Station-Type Cubicle Switchgear
IEEE C37.20.3	(1997) Metal-Enclosed Interrupter Switchgear
IEEE C37.34	(1994) Test Code for High-Voltage Air Switches

IEEE C37.41	(1994; C37.41c) Design Tests for High-Voltage Fuses, Distribution Enclosed Single-Pole Air Switches, Fuse Disconnecting Switches, and Accessories
IEEE C37.90	(1989; R 1994) Relays and Relay Systems Associated with Electric Power Apparatus
IEEE C37.90.1	(1989; R 1994) IEEE Standard Surge Withstand Capability (SWC) Tests for Protective Relays and Relay Systems
IEEE C37.98	(1987; R 1991) Seismic Testing of Relays
IEEE C57.12.00	(1993) Standard General Requirements for Liquid-Immersed Distribution, Power, and Regulating Transformers
IEEE C57.13	(1993) Instrument Transformers
IEEE C57.98	(1993) Guide for Transformer Impulse Tests \$avail only as part of Distribution, Power, and Regulating Transformers Stds Collection
IEEE C62.1	(1989; R 1994) Surge Arresters for AC Power Circuits
IEEE C62.11	(1999) IEEE Standard Metal-Oxide Surge Arresters for AC Power Circuits
IEEE C62.2	(1987; R 1994) Guide for the Application of Gapped Silicon-Carbide Surge Arresters for Alternating Current Systems
IEEE Std 100	(1997) IEEE Standard Dictionary of Electrical and Electronics Terms
IEEE Std 242	(1986; R 1991) Recommended Practice for Protection and Coordination of Industrial and Commercial Power Systems
IEEE Std 386	(1995) Separable Insulated Connector Systems for Power Distribution Systems Above 600V
IEEE Std 399	(1997) Recommended Practice for Industrial and Commercial Power Systems Analysis
IEEE Std 404	(1993) Cable Joints for Use with Extruded Dielectric Cable Rated 5000 V Through 138 000 V and Cable Joints for Use with Laminated Dielectric Cable Rated 2500 V Through 500 000 V
IEEE Std 48	(1998) Standard Test Procedures and Requirements for Alternating-Current Cable Terminations 2.5 kV through 765 kV

IEEE Std 592	(1990; R 1996) Exposed Semiconducting Shields on Premolded High Voltage Cable Joints and Separable Insulated Connectors
IEEE Std 81	(1983) Guide for Measuring Earth Resistivity, Ground Impedance, and Earth Surface Potentials of a Ground System (Part 1) \$31.00$\F

NATIONAL ELECTRICAL MANUFACTURERS ASSOCIATION (NEMA)

NEMA FB 1	(1993) Fittings, Cast Metal Boxes, and Conduit Bodies for Conduit and Cable Assemblies
NEMA FU 1	(1986) Low Voltage Cartridge Fuses
NEMA LA 1	(1992) Surge Arresters
NEMA TC 6	(1990) PVC and ABS Plastic Utilities Duct for Underground Installation
NEMA WC 7	(1988; Rev 3 1996) Cross-Linked-Thermosetting-Polyethylene-Insulated Wire and Cable for the Transmission and Distribution of Electrical Energy
NEMA WC 8	(1988; Rev 3 1996) Ethylene-Propylene-Rubber-Insulated Wire and Cable for the Transmission and Distribution of Electrical Energy

NATIONAL FIRE PROTECTION ASSOCIATION (NFPA)

NFPA 70	(2002) National Electrical Code

UNDERWRITERS LABORATORIES (UL)

UL 1072	(1995; Rev Mar 1998) Medium Voltage Power Cables
UL 1242	(1996; Rev Mar 1998) Intermediate Metal Conduit
UL 198D	(1995) Class K Fuses
UL 467	(1993; Rev thru Apr 1999) Grounding and Bonding Equipment
UL 486A	(1997; Rev thru Dec 1998) Wire Connectors and Soldering Lugs for Use with Copper Conductors
UL 486B	(1997; Rev Jun 1997) Wire Connectors for Use with Aluminum Conductors
UL 510	(1994; Rev thru Apr 1998) Polyvinyl Chloride, Polyethylene, and Rubber

	Insulating Tape
UL 514A	(1996; Rev Dec 1999) Metallic Outlet Boxes
UL 6	(1997) Rigid Metal Conduit
UL 651	(1995; Rev thru Oct 1998) Schedule 40 and 80 Rigid PVC Conduit
UL 854	(1996; Rev Oct 1999) Service-Entrance Cables

1.2 GENERAL REQUIREMENTS

1.2.1 Terminology

Terminology used in this specification is as defined in IEEE Std 100.

1.2.2 Rented Equipment

Section 16050, "Basic Electrical Materials Methods" shall apply to this section with additions and modifications specified herein.

1.3 SUBMITTALS

Government approval is required for submittals with a "G" designation; submittals not having a "G" designation are for information only. When used, a designation following the "G" designation identifies the office that will review the submittal for the Government. The following shall be submitted in accordance with Section 01330 SUBMITTAL PROCEDURES:

SD-02 Shop Drawings

Electrical Distribution System; G

Detail drawings consisting of equipment drawings, illustrations, schedules, instructions, diagrams manufacturers standard installation drawings and other information necessary to define the installation and enable the Government to check conformity with the requirements of the contract drawings.

If departures from the contract drawings are deemed necessary by the Contractor, complete details of such departures shall be included with the detail drawings. Approved departures shall be made at no additional cost to the Government.

Detail drawings shall show how components are assembled, function together and how they will be installed on the project. Data and drawings for component parts of an item or system shall be coordinated and submitted as a unit. Data and drawings shall be coordinated and included in a single submission. Multiple submissions for the same equipment or system are not acceptable except where prior approval has been obtained from the Contracting Officer. In such cases, a list of data to be submitted later shall be included with the first submission. Detail drawings shall consist of the following:

a. Detail drawings showing physical arrangement, construction

details, connections, finishes, materials used in fabrication, provisions for conduit or busway entrance, access requirements for installation and maintenance, physical size, electrical characteristics, foundation and support details, and equipment weight. Drawings shall be drawn to scale and/or dimensioned. All optional items shall be clearly identified as included or excluded.

b. Internal wiring diagrams of equipment showing wiring as actually provided for this project. External wiring connections shall be clearly identified.

Detail drawings shall as a minimum depict the installation of the following items:

a. Medium-voltage cables and accessories including cable installation plan.

b. Transformers.

c. Substations.

d. Switchgear.

e. Pad-mounted loadbreak switches.

f. Busways.

g. Surge arresters.

As-Built Drawings; G

The as-built drawings shall be a record of the construction as installed. The drawings shall include the information shown on the contract drawings as well as deviations, modifications, and changes from the contract drawings, however minor. The as-built drawings shall be a full sized set of prints marked to reflect deviations, modifications, and changes. The as-built drawings shall be complete and show the location, size, dimensions, part identification, and other information. Additional sheets may be added. The as-built drawings shall be jointly inspected for accuracy and completeness by the Contractor's quality control representative and by the Contracting Officer prior to the submission of each monthly pay estimate. Upon completion of the work, the Contractor shall provide three full sized sets of the marked prints to the Contracting Officer for approval. If upon review, the as-built drawings are found to contain errors and/or omissions, they will be returned to the Contractor for correction. The Contractor shall correct and return the as-built drawings to the Contracting Officer for approval within 10 calendar days from the time the drawings are returned to the Contractor.

SD-03 Product Data

Fault Current Analysis; G
Protective Device; G
Coordination Study; G

The study shall be submitted with protective device equipment submittals. No time extension or similar contract modifications

will be granted for work arising out of the requirements for this study. Approval of protective devices proposed shall be based on recommendations of this study. The Government shall not be held responsible for any changes to equipment, device ratings, settings, or additional labor for installation of equipment or devices ordered and/or procured prior to approval of the study.

Nameplates; G

Catalog cuts, brochures, circulars, specifications, product data, and printed information in sufficient detail and scope to verify compliance with the requirements of the contract documents.

Material and Equipment; G

A complete itemized listing of equipment and materials proposed for incorporation into the work. Each entry shall include an item number, the quantity of items proposed, and the name of the manufacturer of each such item.

General Installation Requirements; G

As a minimum, installation procedures for transformers, substations, switchgear, and medium-voltage cable terminations and splices.

Procedures shall include cable pulling plans, diagrams, instructions, and precautions required to install, adjust, calibrate, and test the devices and equipment.

SD-06 Test Reports

Factory Tests; G

Certified factory test reports shall be submitted when the manufacturer performs routine factory tests, including tests required by standards listed in paragraph REFERENCES. Results of factory tests performed shall be certified by the manufacturer, or an approved testing laboratory, and submitted within 7 days following successful completion of the tests. The manufacturer's pass-fail criteria for tests specified in paragraph FIELD TESTING shall be included.

Field Testing; G

A proposed field test plan, 20 days prior to testing the installed system. No field test shall be performed until the test plan is approved. The test plan shall consist of complete field test procedures including tests to be performed, test equipment required, and tolerance limits.

Operating Tests; G

Six copies of the information described below in 8-1/2 by 11 inch binders having a minimum of three rings, including a separate section for each test. Sections shall be separated by heavy plastic dividers with tabs.

a. A list of equipment used, with calibration certifications.

b. A copy of measurements taken.

c. The dates of testing.

d. The equipment and values to be verified.

e. The condition specified for the test.

f. The test results, signed and dated.

g. A description of adjustments made.

Cable Installation; G

Six copies of the information described below in 8-1/2 by 11 inch binders having a minimum of three rings from which material may readily be removed and replaced, including a separate section for each cable pull. Sections shall be separated by heavy plastic dividers with tabs, with all data sheets signed and dated by the person supervising the pull.

a. Site layout drawing with cable pulls numerically identified.

b. A list of equipment used, with calibration certifications. The manufacturer and quantity of lubricant used on pull.

c. The cable manufacturer and type of cable.

d. The dates of cable pulls, time of day, and ambient temperature.

e. The length of cable pull and calculated cable pulling tensions.

f. The actual cable pulling tensions encountered during pull.

SD-07 Certificates

Material and Equipment; G

Where materials or equipment are specified to conform to the standards of the Underwriters Laboratories (UL) or to be constructed or tested, or both, in accordance with the standards of the American National Standards Institute (ANSI), the Institute of Electrical and Electronics Engineers (IEEE), or the National Electrical Manufacturers Association (NEMA), the Contractor shall submit proof that the items provided conform to such requirements. The label of, or listing by, UL will be acceptable as evidence that the items conform. Either a certification or a published catalog specification data statement, to the effect that the item is in accordance with the referenced ANSI or IEEE standard, will be acceptable as evidence that the item conforms. A similar certification or published catalog specification data statement to the effect that the item is in accordance with the referenced NEMA standard, by a company listed as a member company of NEMA, will be acceptable as evidence that the item conforms. In lieu of such certification or published data, the Contractor may submit a certificate from a recognized testing agency equipped and

competent to perform such services, stating that the items have been tested and that they conform to the requirements listed, including methods of testing of the specified agencies. Compliance with above-named requirements does not relieve the Contractor from compliance with any other requirements of the specifications.

Cable Joints; G

A certification that contains the names and the qualifications of people recommended to perform the splicing and termination of medium-voltage cables approved for installation under this contract. The certification shall indicate that any person recommended to perform actual splicing and terminations has been adequately trained in the proper techniques and have had at least three recent years of experience in splicing and terminating the same or similar types of cables approved for installation. In addition, any person recommended by the Contractor may be required to perform a practice splice and termination, in the presence of the Contracting Officer, before being approved as a qualified installer of medium-voltage cables. If that additional requirement is imposed, the Contractor shall provide short sections of the approved types of cables along with the approved type of splice and termination kits, and detailed manufacturer's instruction for the proper splicing and termination of the approved cable types.

Cable Installer Qualifications; G

The Contractor shall provide at least one onsite person in a supervisory position with a documentable level of competency and experience to supervise all cable pulling operations. A resume shall be provided showing the cable installers' experience in the last three years, including a list of references complete with points of contact, addresses and telephone numbers.

SD-10 Operation and Maintenance Data

Electrical Distribution System; G

Six copies of operation and maintenance manuals, within 7 calendar days following the completion of tests and including assembly, installation, operation and maintenance instructions, spare parts data which provides supplier name, current cost, catalog order number, and a recommended list of spare parts to be stocked. Manuals shall also include data outlining detailed procedures for system startup and operation, and a troubleshooting guide which lists possible operational problems and corrective action to be taken. A brief description of all equipment, basic operating features, and routine maintenance requirements shall also be included. Documents shall be bound in a binder marked or identified on the spine and front cover. A table of contents page shall be included and marked with pertinent contract information and contents of the manual. Tabs shall be provided to separate different types of documents, such as catalog ordering information, drawings, instructions, and spare parts data. Index sheets shall be provided for each section of the manual when warranted by the quantity of documents included under separate tabs or dividers.

Three additional copies of the instructions manual shall be provided within 30 calendar days following the manuals.

1.4 DELIVERY, STORAGE, AND HANDLING

Devices and equipment shall be visually inspected by the Contractor when received and prior to acceptance from conveyance. Stored items shall be protected from the environment in accordance with the manufacturer's published instructions. Damaged items shall be replaced. Oil filled transformers and switches shall be stored in accordance with the manufacturer's requirements. Wood poles held in storage for more than 2 weeks shall be stored in accordance with ANSI O5.1. Handling of wood poles shall be in accordance with ANSI O5.1, except that pointed tools capable of producing indentations more than 1 inch in depth shall not be used. Metal poles shall be handled and stored in accordance with the manufacturer's instructions.

1.5 EXTRA MATERIALS

One additional spare fuse or fuse element for each furnished fuse or fuse element shall be delivered to the contracting officer when the electrical system is accepted. Two complete sets of all special tools required for maintenance shall be provided, complete with a suitable tool box. Special tools are those that only the manufacturer provides, for special purposes (to access compartments, or operate, adjust, or maintain special parts).

PART 2 PRODUCTS

2.1 STANDARD PRODUCT

Material and equipment shall be the standard product of a manufacturer regularly engaged in the manufacture of the product and shall essentially duplicate items that have been in satisfactory use for at least 2 years prior to bid opening. Items of the same classification shall be identical including equipment, assemblies, parts, and components.

2.2 NAMEPLATES

2.2.1 General

Each major component of this specification shall have the manufacturer's name, address, type or style, model or serial number, and catalog number on a nameplate securely attached to the equipment. Nameplates shall be made of noncorrosive metal. Equipment containing liquid dielectrics shall have the type of dielectric on the nameplate. Sectionalizer switch nameplates shall have a schematic with all switch positions shown and labeled. As a minimum, nameplates shall be provided for transformers, circuit breakers, meters, switches, and switchgear.

2.2.2 Liquid-Filled Transformer Nameplates

Power transformers shall be provided with nameplate information in accordance with IEEE C57.12.00. Nameplates shall indicate the number of gallons and composition of liquid-dielectric, and shall be permanently marked with a statement that the transformer dielectric to be supplied is non-polychlorinated biphenyl. If transformer nameplate is not so marked, the Contractor shall furnish manufacturer's certification for each transformer that the dielectric is non-PCB classified, with less than 2 ppm

PCB content in accordance with paragraph LIQUID DIELECTRICS. Certifications shall be related to serial numbers on transformer nameplates. Transformer dielectric exceeding the 2 ppm PCB content or transformers without certification will be considered as PCB insulated and will not be accepted.

2.3 CORROSION PROTECTION

2.3.1 Aluminum Materials

2.3.2 Ferrous Metal Materials

2.3.2.1 Hardware

Ferrous metal hardware shall be hot-dip galvanized in accordance with ASTM A 153/A 153M and ASTM A 123/A 123M.

2.3.2.2 Equipment

Equipment and component items, including but not limited to transformer stations and ferrous metal luminaries not hot-dip galvanized or porcelain enamel finished, shall be provided with corrosion-resistant finishes which shall withstand 480 hours of exposure to the salt spray test specified in ASTM B 117 without loss of paint or release of adhesion of the paint primer coat to the metal surface in excess of 1/16 inch from the test mark. The scribed test mark and test evaluation shall be in accordance with ASTM D 1654 with a rating of not less than 7 in accordance with TABLE 1, (procedure A). Cut edges or otherwise damaged surfaces of hot-dip galvanized sheet steel or mill galvanized sheet steel shall be coated with a zinc rich paint conforming to the manufacturer's standard.

2.3.3 Finishing

Painting required for surfaces not otherwise specified and finish painting of items only primed at the factory shall be as specified in Section 09900 PAINTS AND COATINGS.

2.4 CABLES

Cables shall be single conductor type unless otherwise indicated.

2.4.1 Medium-Voltage Cables

2.4.1.1 General

Cable construction shall be Type MV, conforming to NFPA 70 and UL 1072 Cables shall be manufactured for use in applications as indicated.

2.4.1.2 Ratings

Cables shall be rated for a circuit voltage as indicated.

2.4.1.3 Conductor Material

Underground cables shall be soft drawn copper complying with ASTM B 3 and ASTM B 8 for regular concentric and compressed stranding or ASTM B 496 for compact stranding.

2.4.1.4 Insulation

Cable insulation shall be cross-linked thermosetting polyethylene (XLP) insulation conforming to the requirements of NEMA WC 7 and AEIC CS5 or ethylene-propylene-rubber (EPR) insulation conforming to the requirements of NEMA WC 8 and AEIC CS6. A 133 percent insulation level shall be used on 5 kV, 15 kV and 25 kV rated cables. A 100 percent insulation level shall be used on 35kV rated cables.

2.4.1.5 Shielding

Cables rated for 2 kV and above shall have a semiconducting conductor shield, a semiconducting insulation shield.

2.4.1.6 Neutrals

Neutral conductors of shall be copper, employing the same insulation and jacket materials as phase conductors, except that a 600-volt insulation rating is acceptable.

2.4.1.7 Jackets

Cables shall be provided with a PVC jacket. Direct buried cables shall be rated for direct burial.

2.4.2 Low-Voltage Cables

Cables shall be rated 600 volts and shall conform to the requirements of NFPA 70, and must be UL listed for the application or meet the applicable section of either ICEA or NEMA standards.

2.4.2.1 Conductor Material

Underground cables shall be annealed copper complying with ASTM B 3 and ASTM B 8. Intermixing of copper and aluminum conductors is not permitted.

2.4.2.2 Insulation

Insulation must be in accordance with NFPA 70, and must be UL listed for the application or meet the applicable sections of either ICEA, or NEMA standards.

2.4.2.3 Jackets

Multiconductor cables shall have an overall PVC outer jacket.

2.4.2.4 Direct Buried

Single and multi-conductor cables shall of a type identified for direct burial. Service entrance cables shall conform to UL 854 for Type USE service entrance cable.

2.4.2.5 In Duct

Cables shall be single-conductor cable, in accordance with NFPA 70.

2.5 CABLE JOINTS, TERMINATIONS, AND CONNECTORS

2.5.1 Medium-Voltage Cable Joints

Medium-voltage cable joints shall comply with IEEE Std 404 and IEEE Std 592. Medium-voltage cable terminations shall comply with IEEE Std 48. Joints shall be the standard products of a manufacturer and shall be either of the factory preformed type or of the kit type containing tapes and other required parts. Joints shall have ratings not less than the ratings of the cables on which they are installed. Splice kits may be of the heat-shrinkable type for voltages up to 15 kV, of the premolded splice and connector type, the conventional taped type, or the resin pressure-filled overcast taped type for voltages up to 35 kV; except that for voltages of 7.5 kV or less a resin pressure-filled type utilizing a plastic-tape mold is acceptable. Joints used in manholes, handholes, vaults and pull boxes shall be certified by the manufacturer for waterproof, submersible applications.

2.5.2 Medium-Voltage Separable Insulated Connectors

Separable insulated connectors shall comply with IEEE Std 386 and IEEE Std 592 and shall be of suitable construction or standard splice kits shall be used. Separable insulated connectors are acceptable for voltages up to 35 kV. Connectors shall be of the loadbreak type as indicated, of suitable construction for the application and the type of cable connected, and shall include cable shield adaptors. Separable insulated connectors shall not be used as substitutes for conventional permanent splices. External clamping points and test points shall be provided.

2.5.3 Low-Voltage Cable Splices

Low-voltage cable splices and terminations shall be rated at not less than 600 Volts. Splices in conductors No. 10 AWG and smaller shall be made with an insulated, solderless, pressure type connector, conforming to the applicable requirements of UL 486A. Splices in conductors No. 8 AWG and larger shall be made with noninsulated, solderless, pressure type connector, conforming to the applicable requirements of UL 486A and UL 486B. Splices shall then be covered with an insulation and jacket material equivalent to the conductor insulation and jacket. Splices below grade or in wet locations shall be sealed type conforming to ANSI C119.1 or shall be waterproofed by a sealant-filled, thick wall, heat shrinkable, thermosetting tubing or by pouring a thermosetting resin into a mold that surrounds the joined conductors.

2.5.4 Terminations

Terminations shall be in accordance with IEEE Std 48, Class 1 or Class 2; of the molded elastomer, wet-process porcelain, prestretched elastomer, heat-shrinkable elastomer, or taped type. Acceptable elastomers are track-resistant silicone rubber or track-resistant ethylene propylene compounds, such as ethylene propylene rubber or ethylene propylene diene monomer. Separable insulated connectors may be used for apparatus terminations, when such apparatus is provided with suitable bushings. Terminations shall be of the outdoor type, except that where installed inside outdoor equipment housings which are sealed against normal infiltration of moisture and outside air, indoor, Class 2 terminations are acceptable. Class 3 terminations are not acceptable. Terminations, where required, shall be provided with mounting brackets suitable for the intended installation and with grounding provisions for the cable shielding, metallic sheath, and armor.

2.5.4.1 Factory Preformed Type

Molded elastomer, wet-process porcelain, prestretched, and heat-shrinkable terminations shall utilize factory preformed components to the maximum extent practicable rather than tape build-up. Terminations shall have basic impulse levels as required for the system voltage level.

2.5.4.2 Taped Terminations

Taped terminations shall use standard termination kits providing terminal connectors, field-fabricated stress cones, and rain hoods. Terminations shall be at least 12-1/2 inches long from the end of the tapered cable jacket to the start of the terminal connector, or not less than the kit manufacturer's recommendations, whichever is greater.

2.6 CONDUIT AND DUCTS

Duct lines shall be concrete-encased, thin-wall type. Duct lines shall be concrete-encased, thin-wall type for duct lines between manholes and for other medium-voltage lines.

2.6.1 Metallic Conduit

Intermediate metal conduit shall comply with UL 1242. Rigid galvanized steel conduit shall comply with UL 6 and ANSI C80.1. Metallic conduit fittings and outlets shall comply with UL 514A and NEMA FB 1.

2.6.2 Nonmetallic Ducts

2.6.2.1 Concrete Encased Ducts

UL 651 Schedule 40.

2.6.2.2 Direct Burial

UL 651 Schedule 40 as indicated, or NEMA TC 6 Type DB.

2.6.3 Conduit Sealing Compound

Compounds for sealing ducts and conduit shall have a putty-like consistency workable with the hands at temperatures as low as 35 degrees F, shall neither slump at a temperature of 300 degrees F, nor harden materially when exposed to the air. Compounds shall adhere to clean surfaces of fiber or plastic ducts; metallic conduits or conduit coatings; concrete, masonry, or lead; any cable sheaths, jackets, covers, or insulation materials; and the common metals. Compounds shall form a seal without dissolving, noticeably changing characteristics, or removing any of the ingredients. Compounds shall have no injurious effect upon the hands of workmen or upon materials.

2.7 MANHOLES, HANDHOLES, AND PULLBOXES

Manholes, handholes, and pullboxes shall be as indicated. Strength of manholes, handholes, and pullboxes and their frames and covers shall conform to the requirements of IEEE C2. Precast-concrete manholes shall have the required strength established by ASTM C 478, ASTM C 478M. Frames and covers shall be made of gray cast iron and a machine-finished seat shall be provided to ensure a matching joint between frame and cover. Cast iron shall comply with ASTM A 48, Class 30B, minimum. Handholes for low voltage cables installed in parking lots, sidewalks, and turfed areas shall be fabricated from an aggregate consisting of sand and with continuous woven glass strands having an overall compressive strength of at least

10,000 psi and a flexural strength of at least 5,000 psi. Pullbox and handhole covers in sidewalks, and turfed areas shall be of the same material as the box. Concrete pullboxes shall consist of precast reinforced concrete boxes, extensions, bases, and covers.

2.8 TRANSFORMERS AND SWITCHGEAR

Transformers and switchgear shall be of the outdoor type having the ratings and arrangements indicated. Medium-voltage ratings of cable terminations shall be 35 kV between phases for 100 percent insulation level.

2.8.1 Pad-Mounted Transformers

Pad-mounted transformers shall comply with ANSI C57.12.26 and shall be of the radial type. Pad-mounted transformer stations shall be assembled and coordinated by one manufacturer and each transformer station shall be shipped as a complete unit so that field installation requirements are limited to mounting each unit on a concrete pad and connecting it to primary and secondary lines. Stainless steel pins and hinges shall be provided. Barriers shall be provided between high- and low-voltage compartments. High-voltage compartment doors shall be interlocked with low-voltage compartment doors to prevent access to any high-voltage section unless its associated low-voltage section door has first been opened. Compartments shall be sized to meet the specific dimensional requirements of ANSI C57.12.26. Pentahead locking bolts shall be provided with provisions for a padlock.

2.8.1.1 High-Voltage Compartments

The high-voltage compartment shall be dead-front construction. Primary switching and protective devices shall include loadbreak switching, oil-immersed, oil-immersed, bayonet-type, overload fuse in series with a partial range current-limiting fuse, medium-voltage separable loadbreak connectors, universal bushing wells and inserts or integral one piece bushings and surge arresters. Fuses shall comply with the requirements of paragraph METERING AND PROTECTIVE DEVICES. The switch shall be mounted inside transformer tank with switch operating handle located in high-voltage compartment and equipped with metal loop for hook stick operation. Fuses shall be interlocked with switches so that fuses can be removed only when the associated switch is in the "OPEN" position. Adjacent to medium-voltage cable connections, a nameplate or equivalent stencilled inscription shall be provided inscribed "DO NOT OPEN CABLE CONNECTORS UNLESS SWITCH IS OPEN." Surge arresters shall be fully insulated and configured to terminate on the same bushing as the primary cable by means of a loadbreak, feed-through bushing insert.

2.8.1.2 Load-Break Switch

Radial-feed oil-immersed type rated at 22 kV, 125 kV BIL, with a continuous current rating and load-break rating of 200 ampere, and a make-and-latch rating of 10,000 rms amperes symmetrical. Locate the switch handle in the high-voltage compartment.

2.8.1.3 Transformer Tank Sections

Transformers shall comply with IEEE C57.12.00, ANSI C57.12.21, and ANSI C57.12.26 and shall be of the mineral oil-insulated type. Transformers shall be suitable for outdoor use and shall have 2 separate windings per phase. Standard NEMA primary taps shall be provided. Where primary taps

are not specified, 4, 2-1/2 percent rated kVA high-voltage taps shall be provided 2 above and 2 below rated, primary voltage. Operating handles for primary tap changers for de-energized operation shall be located within high-voltage compartments, externally to transformer tanks. Adjacent to the tap changer operating handle, a nameplate or equivalent stenciled inscription shall be provided and inscribed "DO NOT OPERATE UNDER LOAD." Transformer ratings at 60 Hz shall be as follows: As indicated.

2.8.1.4 Low-Voltage Cable Compartments

Neutrals shall be provided with fully-insulated bushings. Clamp type cable terminations, suitable for copper conductors entering from below, shall be provided as necessary.

2.8.1.5 Accessories

High-voltage warning signs shall be permanently attached to each side of transformer stations. Voltage warning signs shall comply with IEEE C2. Copper-faced steel or stainless steel ground connection pads shall be provided in both the high- and low-voltage compartments. Dial-type thermometer, liquid-level gauge, and drain valve with built-in sampling device shall be provided for each transformer station. Insulated-bushing-type parking stands shall be provided adjacent to each separable load-break elbow to provide for cable isolation during sectionalizing operations.

2.9 METERING AND PROTECTIVE DEVICES

2.9.1 Circuit Breakers, Low-Voltage

2.9.1.1 Molded-Case Circuit Breakers

Mold-Case Circuit breakers shall meet the requirements in Section 16415 "Electrical Work, InteriorM

2.9.2 Fuses, Medium-Voltage, Including Current-Limiting

2.9.2.1 Construction

Units shall be suitable for outdoor use. Fuses shall have integral blown-fuse indicators. All ratings shall be clearly visible.

2.9.2.2 Ratings

Current-limiting power fuses shall have ratings in accordance with ANSI C37.46 and as follows: As indicated.

2.9.2.3 E-Rated, Current-Limiting Power Fuses

E-rated, current-limiting, power fuses shall conform to ANSI C37.46.

2.9.2.4 C-Rated, Current-Limiting Power Fuses

C-rated, current-limiting power fuses shall open in 1000 seconds at currents between 170 and 240 percent of the C rating.

2.9.3 Fuses, Low-Voltage, Including Current-Limiting

Low-voltage fuses shall conform to NEMA FU 1. Time delay and nontime delay

options shall be as shown. Equipment provided under this contract shall be provided with a complete set of properly rated fuses when the equipment manufacturer utilizes fuses in the manufacture of the equipment, or if current-limiting fuses are required to be installed to limit the ampere-interrupting capacity of circuit breakers or equipment to less than the maximum available fault current at the location of the equipment to be installed. Fuses shall have a voltage rating of not less than the phase-to-phase circuit voltage, and shall have the time-current characteristics required for effective power system coordination.

2.9.3.1 Cartridge Fuses

Cartridge fuses, current-limiting type, Class RK1 shall have tested interrupting capacity not less than 200,000 amperes. Fuse holders shall be the type that will reject Class H fuses.

a. Class K fuses shall conform to UL 198D.

2.9.3.2 Transformer Circuit Fuses

Transformer circuit fuses shall be Class RK1 or RK5, current-limiting, time-delay with 200,000 amperes interrupting capacity.

2.9.4 Instrument Transformers

2.9.4.1 General

Instrument transformers shall comply with ANSI C12.11 and IEEE C57.13. Instrument transformers shall be configured for mounting in/on the device to which they are applied. Polarity marks on instrument transformers shall be visually evident and shown on drawings.

2.9.4.2 Current Transformers

Unless otherwise indicated, bar, wound, or window-type transformers are acceptable; and except for window-type units installed over insulated buses, transformers shall have a BIL rating consistent with the rated BIL of the associated switchgear or electric power apparatus bushings, buses or conductors. Current transformers shall have the indicated ratios. The continuous thermal-current rating factor shall not be less than 1.2. Other thermal and mechanical ratings of current transformers and their primary leads shall be coordinated with the design of the circuit breaker and shall be not less than the momentary rating of the associated circuit breaker. Circuit protectors shall be provided across secondary leads of the current transformers to prevent the accident open-circuiting of the transformers while energized. Each terminal of each current transformer shall be connected to a short-circuiting terminal block in the circuit interrupting mechanism cabinet, power transformer terminal cabinet, and in the associated instrument and relay cabinets.

2.9.4.3 Current Transformers for Power Transformers

Single-ratio bushing type current transformers shall be provided internally around power transformer bushings as shown. Single-ratio units shall have a minimum relaying accuracy class of 0.3B-0.5.

2.9.4.4 Current Transformers for Kwh and Demand Metering (Low-Voltage)

Current transformers shall conform to IEEE C57.13. Provide current

transformers with a metering accuracy Class of 0.3 through 1.8, with a minimum RF of 1.5 at 30 degrees C, with 600-volt insulations, and 10 kV BIL. Provide butyl-molded, window-type current transformers mounted on the transformer low-voltage bushings. Route current transformer leads in a location as remote as possible from the power transformer secondary cables to permit current measurements to be taken with hook-on-ammeters.

2.9.4.5 Voltage Transformers

Voltage transformers shall have indicated ratios. Units shall have an accuracy class rating of 3. Voltage transformers shall be of the drawout type having current-limiting fuses in both primary and secondary circuits. Mechanical interlocks shall prevent removal of fuses, unless the associated voltage transformer is in a drawout position. Voltage transformer compartments shall have hinged doors.

2.9.5 Protective Relaying

2.9.5.1 General

Solid-state protective relays shall be provided as shown and shall be of a type specifically designed for use on power switchgear or associated electric power apparatus. Protective relays shall conform to IEEE C37.90. Relays and auxiliaries shall be suitable for operation with the instrument transformer ratios and connections provided.

2.9.5.2 Construction

Relays shall be dustproof and moisture resistant. Necessary test devices shall be incorporated within each relay and shall provide a means for testing either from an external source of electric power or from associated instrument transformers. Each relay shall be provided with an operation indicator and an external target reset device. Relays shall have necessary auxiliaries for proper operation. Relays and auxiliaries shall be suitable for operation with the instrument transformer ratios and connections provided.

2.9.5.3 Ratings

Relays shall be the manufacturer's standard items of equipment with appropriate ranges for time dial, tap, and other settings. Relay device numbers shall correspond to the function names and descriptions of IEEE C37.2.

2.10 SURGE ARRESTERS

Surge arresters shall comply with NEMA LA 1, IEEE C62.1, IEEE C62.2, and IEEE C62.11 and shall be provided where indicated. Arresters shall be distribution class, rated as shown. Arresters for use at elevations in excess of 6000 feet above mean sea level shall be specifically rated for that purpose. Arresters shall be equipped with mounting brackets suitable for the indicated installations. Arresters shall be of the metal-oxide varistor type.

2.11 GROUNDING AND BONDING

2.11.1 Driven Ground Rods

Ground rods shall be copper-clad steel conforming to UL 467 not less than

3/4 inch in diameter by 10 feet in length.

2.11.2 Grounding Conductors

Grounding conductors shall be bare, except where installed in conduit with associated phase conductors. Insulated conductors shall be of the same material as phase conductors and green color-coded, except that conductors shall be rated no more than 600 volts. Bare conductors shall be ASTM B 8 soft-drawn unless otherwise indicated. Aluminum is not acceptable.

2.12 CONCRETE AND REINFORCEMENT

Concrete work shall have minimum 3000 psi compressive strength and conform to the requirements of Section 03300 CAST-IN-PLACE STRUCTURAL CONCRETE. Concrete reinforcing shall be as specified in Section 03200 CONCRETE REINFORCEMENT.

2.13 PADLOCKS

Padlocks shall comply with Section 08710 DOOR HARDWARE.

2.14 CABLE FIREPROOFING SYSTEMS

Cable fireproofing systems shall be listed in FM P7825a as a fire-protective coating or tape approved for grouped electrical conductors and shall be suitable for application on the type of medium-voltage cables provided. After being fully cured, materials shall be suitable for use where exposed to oil, water, gases, salt water, sewage, and fungus and shall not damage cable jackets or insulation. Asbestos materials are not acceptable.

2.14.1 Fireproof Coating

Cable fireproofing coatings shall be compounded of water-based thermoplastic resins, flame-retardant chemicals, and inorganic noncombustible fibers and shall be suitable for the application methods used. Coatings applied on bundled cables shall have a derating factor of less than 5 percent, and a dielectric strength of 95 volts per mil minimum after curing.

2.14.2 Fireproofing Tape

Fireproofing tape shall be at least 2 inches wide and shall be a flexible, conformable, polymeric, elastomer tape designed specifically for fireproofing cables.

2.14.3 Plastic Tape

Preapplication plastic tape shall be pressure sensitive, 10 mil thick, conforming to UL 510.

2.15 LIQUID DIELECTRICS

Liquid dielectrics for transformers, capacitors, reclosers, and other liquid-filled electrical equipment shall be non-polychlorinated biphenyl (PCB) mineral-oil or less-flammable liquid as specified. Nonflammable fluids shall not be used. Tetrachloroethylene (perchloroethylene) and 1, 2, 4 trichlorobenzene fluids shall not be used. Liquid dielectrics in retrofitted equipment shall be certified by the manufacturer as having less

than 2 parts per million (ppm) PCB content. In lieu of the manufacturer's certification, the Contractor may submit a test sample of the dielectric in accordance with ASTM D 923 and have tests performed per ASTM D 4059 at a testing facility approved by the Contracting Officer. Equipment with test results indicating PCB level exceeding 2 ppm shall be replaced.

2.16 FACTORY TESTS

Factory tests shall be performed, as follows, in accordance with the applicable publications and with other requirements of these specifications. The Contracting Officer shall be notified at least 10 days before the equipment is ready for testing. The Contracting Officer reserves the right to witness the tests.

a. Transformers: Manufacturer's standard design tests in accordance with IEEE C57.12.00.

b. Transformers rated 200 kVA and above: Reduced full-wave, chopped-wave, and full-wave impulse test on each line and neutral terminal, in accordance with IEEE C57.98.

c. High-Voltage Air Switches: Manufacturer's standard tests in accordance with IEEE C37.34 and IEEE C37.41.

d. Protective Relays: Seismic tests in accordance with IEEE C37.98. Surge withstand tests in accordance with IEEE C37.90.1.

e. Relaying Current Transformers: Manufacturer's standard tests in accordance with IEEE C57.13.

f. Instrument Current Transformers: Manufacturer's standard tests in accordance with IEEE C57.13.

g. Factory Preformed Terminations: Wet withstand voltage tests in accordance with IEEE Std 48 for the next higher BIL level.

h. Outdoor Switchgear: Manufacturer's standard tests in accordance with IEEE C37.20.1, IEEE C37.20.2, and IEEE C37.20.3.

i. Electrical Power Insulators: Manufacturer's standard tests in accordance with ANSI C29.1.

2.17 FENCING

Fencing shall conform to the requirements of Section 02821 FENCING.

2.18 COORDINATED POWER SYSTEM PROTECTION

Analyses shall be prepared to demonstrate that the equipment selected and system constructed meet the contract requirements for equipment ratings, coordination, and protection. They shall include a load flow analysis, a fault current analysis, and a protective device coordination study. The studies shall be performed by a registered professional engineer with demonstrated experience in power system coordination in the last three years. The Contractor shall provide a list of references complete with points of contact, addresses and telephone numbers. The selection of the engineer is subject to the approval of the Contracting Officer.

2.18.1 Scope of Analyses

The fault current analysis, and protective device coordination study shall begin at: the source bus and extend down to system bused where fault availability is 10,000 amperes (symmetrical) for building/facility 600 volt level distribution buses for main electric supply substations.

2.18.2 Determination of Facts

The time-current characteristics, features, and nameplate data for each existing protective device shall be determined and documented. The Contractor shall coordinate with the Base Utility for fault current availability at the site.

2.18.3 Single Line Diagram

A single line diagram shall be prepared to show the electrical system buses, devices, transformation points, and all sources of fault current (including generator and motor contributions). A fault-impedance diagram or a computer analysis diagram may be provided. Each bus, device or transformation point shall have a unique identifier. If a fault-impedance diagram is provided, impedance data shall be shown. Locations of switches, breakers, and circuit interrupting devices shall be shown on the diagram together with available fault data, and the device interrupting rating.

2.18.4 Fault Current Analysis

2.18.4.1 Method

The fault current analysis shall be performed in accordance with methods described in IEEE Std 242, and IEEE Std 399.

2.18.4.2 Data

Actual data shall be utilized in fault calculations. Bus characteristics and transformer impedances shall be those proposed. Data shall be documented in the report.

2.18.5 Coordination Study

The study shall demonstrate that the maximum possible degree of selectively has been obtained between devices specified, consistent with protection of equipment and conductors from damage from overloads and fault conditions. The study shall include a description of the coordination of the protective devices in this project. Provide a written narrative that describes: which devices may operate in the event of a fault at each bus; the logic used to arrive at device ratings and settings; situations where system coordination is not achievable due to device limitations (an analysis of any device curves which overlap); coordination between upstream and downstream devices; and any relay settings. Recommendations to improve or enhance system reliability, and detail where such changes would involve additions or modifications to the contract and cost changes (addition or reduction) shall be provided. Composite coordination plots shall be provided on log-log graph paper.

2.18.6 Study Report

a. The report shall include a narrative describing: the analyses performed; the bases and methods used; and the desired method of coordinated protection of the power system.

b. The study shall include descriptive and technical data for existing devices and new protective devices proposed. The data shall include manufacturers published data, nameplate data, and definition of the fixed or adjustable features of the existing or new protective devices.

c. The report shall document utility company data including system voltages, fault MVA, system X/R ratio, time-current characteristics curves, current transformer ratios, and relay device numbers and settings; and existing power system data including time-current characteristic curves and protective device ratings and settings.

d. The report shall contain fully coordinated composite time-current characteristic curves for each bus in the system, as required to ensure coordinated power system protection between protective devices or equipment. The report shall include recommended ratings and settings of all protective devices in tabulated form.

e. The report shall provide the calculation performed for the analyses, including computer analysis programs utilized. The name of the software package, developer, and version number shall be provided.

PART 3 EXECUTION

3.1 GENERAL INSTALLATION REQUIREMENTS

Equipment and devices shall be installed and energized in accordance with the manufacturer's published instructions. Steel conduits installed underground shall be installed and protected from corrosion in conformance with the requirements of Section 16415 ELECTRICAL WORK, INTERIOR. Except as covered herein, excavation, trenching, and backfilling shall conform to the requirements of Section 02316 EXCAVATION, TRENCHING, AND BACKFILLING FOR UTILITIES SYSTEMS. Concrete work shall have minimum 3000 psi compressive strength and conform to the requirements of Section 03300 CAST-IN-PLACE STRUCTURAL CONCRETE.

3.1.1 Conformance to Codes

The installation shall comply with the requirements and recommendations of NFPA 70 and IEEE C2 as applicable.

3.1.2 Verification of Dimensions

The Contractor shall become familiar with details of the work, shall verify dimensions in the field, and shall advise the Contracting Officer of any discrepancy before performing any work.

3.1.3 Disposal of Liquid Dielectrics

PCB-contaminated dielectrics must be marked as PCB and transported to and incinerated by an approved EPA waste disposal facility. The Contractor shall furnish certification of proper disposal. Contaminated dielectrics shall not be diluted to lower the contamination level.

3.2 CABLE AND BUSWAY INSTALLATION

The Contractor shall obtain from the manufacturer an installation manual or set of instructions which addresses such aspects as cable construction, insulation type, cable diameter, bending radius, cable temperature, lubricants, coefficient of friction, conduit cleaning, storage procedures, moisture seals, testing for and purging moisture, etc. The Contractor shall then prepare a checklist of significant requirements. Perform pulling calculations and prepare a pulling plan which shall be submitted along with the manufacturers instructions in accordance with SUBMITTALS.

3.2.1 Cable Installation Plan and Procedure

Cable shall be installed strictly in accordance with the cable manufacturer's recommendations. Each circuit shall be identified by means of a fiber, laminated plastic, or non-ferrous metal tags, or approved equal, in each manhole, handhole, junction box, and each terminal. Each tag shall contain the following information; cable type, conductor size, circuit number, circuit voltage, cable destination and phase identification.

3.2.1.1 Cable Inspection

The cable reel shall be inspected for correct storage positions, signs of physical damage, and broken end seals. If end seal is broken, moisture shall be removed from cable in accordance with the cable manufacturer's recommendations.

3.2.1.2 Duct Cleaning

Duct shall be cleaned with an assembly that consists of a flexible mandrel (manufacturers standard product in lengths recommended for the specific size and type of duct) that is 1/4 inch less than inside diameter of duct, 2 wire brushes, and a rag. The cleaning assembly shall be pulled through conduit a minimum of 2 times or until less than a volume of 8 cubic inches of debris is expelled from the duct.

3.2.1.3 Duct Lubrication

The cable lubricant shall be compatible with the cable jacket for cable that is being installed. Application of lubricant shall be in accordance with lubricant manufacturer's recommendations.

3.2.1.4 Cable Installation

The Contractor shall provide a cable feeding truck and a cable pulling winch as required. The Contractor shall provide a pulling grip or pulling eye in accordance with cable manufacturer's recommendations. The pulling grip or pulling eye apparatus shall be attached to polypropylene or manilla rope followed by lubricant front end packs and then by power cables. A dynamometer shall be used to monitor pulling tension. Pulling tension shall not exceed cable manufacturer's recommendations. The Contractor shall not allow cables to cross over while cables are being fed into duct. For cable installation in cold weather, cables shall be kept at 50 degrees F temperature for at least 24 hours before installation.

3.2.1.5 Cable Installation Plan

The Contractor shall submit a cable installation plan for all cable pulls in accordance with the detail drawings portion of paragraph SUBMITTALS. Cable installation plan shall include:

a. Site layout drawing with cable pulls identified in numeric order of expected pulling sequence and direction of cable pull.

b. List of cable installation equipment.

c. Lubricant manufacturer's application instructions.

d. Procedure for resealing cable ends to prevent moisture from entering cable.

e. Cable pulling tension calculations of all cable pulls.

f. Cable percentage conduit fill.

g. Cable sidewall thrust pressure.

h. Cable minimum bend radius and minimum diameter of pulling wheels used.

i. Cable jam ratio.

j. Maximum allowable pulling tension on each different type and size of conductor.

k. Maximum allowable pulling tension on pulling device.

l. Cable Installer Qualifications.

3.2.2 Duct Line

Cables shall be installed in duct lines where indicated. Cable splices in low-voltage cables shall be made in manholes and handholes only, except as otherwise noted. Cable joints in medium-voltage cables shall be made in manholes or approved pullboxes only. Neutral and grounding conductors shall be installed in the same duct with their associated phase conductors.

3.2.3 Insect and Rodent Damage

Animal guards shall be installed as shown. Buried fiberglass pads shall be installed as shown.

3.2.4 Electric Manholes

Cables shall be routed around the interior walls and securely supported from walls on cables racks. Cable routing shall minimize cable crossover, provide access space for maintenance and installation of additional cables, and maintain cable separation in accordance with IEEE C2.

3.2.5 Busway Installation

Busways penetrating walls shall have wall flanges installed on both surfaces of walls. Wall openings shall be approximately 1/4 inch larger than the busway on each of the 4 busway sides, and openings shall be sealed with a suitable compound. Fire barriers shall be provided when penetrating fire rated walls. Fire barriers shall have a rating equal to the fire wall rating. A weather barrier shall be used when a busway penetrates an exterior wall. Busways shall be supported at intervals not exceeding 10 feet and shall be braced to prevent lateral movement.

3.3 CABLE JOINTS

Medium-voltage cable joints shall be made by qualified cable splicers only. Qualifications of cable splicers shall be submitted in accordance with paragraph SUBMITTALS. Shields shall be applied as required to continue the shielding system through each entire cable joint. Shields may be integrally molded parts of preformed joints. Shields shall be grounded at each joint or in accordance with manufacturer's recommended practice. Cable joints shall provide insulation and jacket equivalent to that of the associated cable. Armored cable joints shall be enclosed in compound-filled, cast-iron or alloy, splice boxes equipped with stuffing boxes and armor clamps of a suitable type and size for the cable being installed.

3.4 FIREPROOFING

Each medium-voltage cable and conductor in manholes shall be fire-proofed for their entire length within the manhole. Where cables and conductors have been lubricated to enhance pulling into ducts, the lubricant shall be removed from cables and conductors exposed in the manhole before fireproofing.

3.4.1 Tape Method

Before application of fireproofing tape, plastic tape wrapping shall be applied over exposed metallic items such as the cable ground wire, metallic outer covering, or armor to minimize the possibility of corrosion from the fireproofing materials and moisture. Before applying fireproofing tape, irregularities of cables, such as at cable joints, shall be evened out with insulation putty. A flexible conformable polymeric elastomer fireproof tape shall be wrapped tightly around each cable spirally in 1/2 lapped wrapping or in 2 butt-jointed wrappings with the second wrapping covering the joints of the first.

3.4.2 Sprayable Method

Manholes shall be power ventilated until coatings are dry and dewatered and the coatings are cured. Ventilation requirements shall be in accordance with the manufacturer's instruction, but not less than 10 air changes per hour shall be provided. Cable coatings shall be applied by spray, brush, or glove to a wet film thickness that reduces to the dry film thickness approved for fireproofing by FM P7825a. Application methods and necessary safety precautions shall be in accordance with the manufacturers instructions. After application, cable coatings shall be dry to the touch in 1 to 2 hours and fully cured in 48 hours, except where the manufacturer has stated that because of unusual humidity or temperature, longer periods may be necessary.

3.5 DUCT LINES

3.5.1 Requirements

Numbers and sizes of ducts shall be as indicated. Duct lines shall be laid with a minimum slope of 4 inches per 100 feet. Depending on the contour of the finished grade, the high-point may be at a terminal, a manhole, a handhole, or between manholes or handholes. Short-radius manufactured 90-degree duct bends may be used only for pole or equipment risers, unless specifically indicated as acceptable. The minimum manufactured bend radius shall be 18 inches for ducts of less than 3 inch diameter, and 36 inches

for ducts 3 inches or greater in diameter. Otherwise, long sweep bends having a minimum radius of 25 feet shall be used for a change of direction of more than 5 degrees, either horizontally or vertically. Both curved and straight sections may be used to form long sweep bends, but the maximum curve used shall be 30 degrees and manufactured bends shall be used. Ducts shall be provided with end bells whenever duct lines terminate in manholes or handholes.

3.5.2 Treatment

Ducts shall be kept clean of concrete, dirt, or foreign substances during construction. Field cuts requiring tapers shall be made with proper tools and match factory tapers. A coupling recommended by the duct manufacturer shall be used whenever an existing duct is connected to a duct of different material or shape. Ducts shall be stored to avoid warping and deterioration with ends sufficiently plugged to prevent entry of any water or solid substances. Ducts shall be thoroughly cleaned before being laid. Plastic ducts shall be stored on a flat surface and protected from the direct rays of the sun.

3.5.3 Concrete Encasement

Ducts requiring concrete encasements shall comply with NFPA 70, except that electrical duct bank configurations for ducts 6 inches in diameter shall be determined by calculation and as shown on the drawings. The separation between adjacent electric power and communication ducts shall conform to IEEE C2. Duct line encasements shall be monolithic construction. Where a connection is made to a previously poured encasement, the new encasement shall be well bonded or doweled to the existing encasement. The Contractor shall submit proposed bonding method for approval in accordance with the detail drawing portion of paragraph SUBMITTALS. At any point, except railroad and airfield crossings, tops of concrete encasements shall be not less than the cover requirements listed in NFPA 70. At railroad and airfield crossings, duct lines shall be encased with concrete and reinforced as indicated to withstand specified surface loadings. Tops of concrete encasements shall be not less than 5 feet below tops of rails or airfield paving unless otherwise indicated. Where ducts are jacked under existing pavement, rigid steel conduit will be installed because of its strength. To protect the corrosion-resistant conduit coating, predrilling or installing conduit inside a larger iron pipe sleeve (jack-and-sleeve) is required. For crossings of existing railroads and airfield pavements greater than 50 feet in length, the predrilling method or the jack-and-sleeve method will be used. Separators or spacing blocks shall be made of steel, concrete, plastic, or a combination of these materials placed not farther apart than 4 feet on centers. Ducts shall be securely anchored to prevent movement during the placement of concrete and joints shall be staggered at least 6 inches vertically.

3.5.4 Installation of Couplings

Joints in each type of duct shall be made up in accordance with the manufacturer's recommendations for the particular type of duct and coupling selected and as approved.

3.5.4.1 Plastic Duct

Duct joints shall be made by brushing a plastic solvent cement on insides of plastic coupling fittings and on outsides of duct ends. Each duct and fitting shall then be slipped together with a quick 1/4-turn twist to set

the joint tightly.

3.5.5 Duct Line Markers

Duct line markers shall be provided at the ends of long duct line stubouts or for other ducts whose locations are indeterminate because of duct curvature or terminations at completely below-grade structures. In addition to markers, a 5 mil brightly colored plastic tape, not less than 3 inches in width and suitably inscribed at not more than 10 feet on centers with a continuous metallic backing and a corrosion-resistant 1 mil metallic foil core to permit easy location of the duct line, shall be placed approximately 12 inches below finished grade levels of such lines.

3.6 MANHOLES, HANDHOLES, AND PULLBOXES

3.6.1 General

Manholes shall be constructed approximately where shown. The exact location of each manhole shall be determined after careful consideration has been given to the location of other utilities, grading, and paving. The location of each manhole shall be approved by the Contracting Officer before construction of the manhole is started. Manholes shall be the type noted on the drawings and shall be constructed in accordance with the applicable details as indicated. Top, walls, and bottom shall consist of reinforced concrete. Walls and bottom shall be of monolithic concrete construction. The Contractor may at his option utilize monolithically constructed precast-concrete manholes having the required strength and inside dimensions as required by the drawings or specifications. In paved areas, frames and covers for manhole and handhole entrances in vehicular traffic areas shall be flush with the finished surface of the paving. In unpaved areas, the top of manhole covers shall be approximately 1/2 inch above the finished grade. Where existing grades that are higher than finished grades are encountered, concrete assemblies designed for the purpose shall be installed to elevate temporarily the manhole cover to existing grade level. All duct lines entering manholes must be installed on compact soil or otherwise supported when entering a manhole to prevent shear stress on the duct at the point of entrance to the manhole. Duct lines entering cast-in-place concrete manholes shall be cast in-place with the manhole. Duct lines entering precast concrete manholes through a precast knockout penetration shall be grouted tight with a portland cement mortar. PVC duct lines entering precast manholes through a PVC endbell shall be solvent welded to the endbell. A cast metal grille-type sump frame and cover shall be installed over the manhole sump. A cable-pulling iron shall be installed in the wall opposite each duct line entrance.

3.6.2 Electric Manholes

Cables shall be securely supported from walls by hot-dip galvanized cable racks with a plastic coating over the galvanizing and equipped with adjustable hooks and insulators. The number of cable racks indicated shall be installed in each manhole and not less than 2 spare hooks shall be installed on each cable rack. Insulators shall be made of high-glazed porcelain. Insulators will not be required on spare hooks.

3.6.3 Communications Manholes

The number of hot-dip galvanized cable racks with a plastic coating over the galvanizing indicated shall be installed in each telephone manhole. Each cable rack shall be provided with 2 cable hooks. Cables for the

telephone and communication systems will be installed by others.

3.6.4 Handholes

Handholes shall be located approximately as shown. Handholes shall be of the type noted on the drawings and shall be constructed in accordance with the details shown.

3.6.5 Pullboxes

Pullbox tops shall be flush with sidewalks or curbs or placed 1/2 inchabove surrounding grades when remote from curbed roadways or sidewalks. Covers shall be marked "Low-Voltage" and provided with 2 lifting eyes and 2 hold-down bolts. Each box shall have a suitable opening for a ground rod. Conduit, cable, ground rod entrances, and unused openings shall be sealed with mortar.

3.6.6 Ground Rods

A ground rod shall be installed at the manholes, handholes and pullboxes. Ground rods shall be driven into the earth before the manhole floor is poured so that approximately 4 inches of the ground rod will extend above the manhole floor. When precast concrete manholes are used, the top of the ground rod may be below the manhole floor and a No. 1/0 AWG ground conductor brought into the manhole through a watertight sleeve in the manhole wall.

3.7 PAD-MOUNTED EQUIPMENT INSTALLATION

Pad-mounted equipment, shall be installed on concrete pads in accordance with the manufacturer's published, standard installation drawings and procedures, except that they shall be modified to meet the requirements of this document. Units shall be installed so that they do not damage equipment or scratch painted or coated surfaces. After installation, surfaces shall be inspected and scratches touched up with a paint or coating provided by the manufacturer especially for this purpose. Three-phase transformers shall be installed with clockwise phase sequence. Primary taps shall be set at normal.

3.7.1 Concrete Pads

3.7.1.1 Construction

Concrete pads for pad-mounted electrical equipment may be either pre-fabricated or poured-in-place. Pads shall be constructed as indicated, except that exact pad dimensions and mounting details are equipment specific and are the responsibility of the Contractor. Tops of concrete pads shall be level and shall project 4 inches above finished paving or grade and sloped to drain. Edges of concrete pads shall have 3/4 inch chamfer. Conduits for primary, secondary, and grounding conductors shall be set in place prior to placement of concrete pads. Where grounding electrode conductors are installed through concrete pads, PVC conduit sleeves shall be installed through the concrete to provide physical protection. To facilitate cable installation and termination, the concrete pad shall be provided with a rectangular hole below the primary and secondary compartments, sized in accordance with the manufacturer's recommended dimensions. Upon completion of equipment installation the rectangular hole shall be filled with masonry grout.

3.7.1.2 Concrete and Reinforcement

Concrete work shall have minimum 3000 psi compressive strength and conform to the requirements of Section 03300 CAST-IN-PLACE STRUCTURAL CONCRETE. Concrete pad reinforcement shall be in accordance with Section 03200 CONCRETE REINFORCEMENT.

3.7.1.3 Sealing

When the installation is complete, the Contractor shall seal all conduit and other entries into the equipment enclosure with an approved sealing compound. Seals shall be of sufficient strength and durability to protect all energized live parts of the equipment from rodents, insects, or other foreign matter.

3.7.2 Padlocks

Padlocks shall be provided for pad-mounted equipment and for each fence gate. Padlocks shall be keyed alike as directed by the Contracting Officer.

3.7.3 Fencing

Fencing shall conform to the requirement of and be installed in accordance with Section 02821 FENCING. Fences shall provide working clearances for operation and maintenance in accordance with IEEE C2. The entire space between fences and concrete pads shall be excavated to a minimum depth of 4 inches below finished gradelines, shall be graded to reasonably level surfaces, and filled with well-compacted clean coarse gravel or crushed stone of 1/2 to 1-1/2 inches graded size up to finished gradelines. Space between fences and concrete pads shall be excavated to a minimum depth of 4 inches below finished gradelines, shall be graded to reasonably level surfaces, and filled with well-compacted clean coarse gravel or crushed stone of 1/2 to 1-1/2 inches graded size up to finished gradelines.

3.8 CONNECTIONS TO BUILDINGS

Cables shall be extended into the various buildings as indicated, and shall be connected to the first applicable termination point in each building. Interfacing with building interior conduit systems shall be at conduit stubouts terminating 5 feet outside of a building and 2 feet below finished grade as specified and provided under Section 16415 ELECTRICAL WORK, INTERIOR. After installation of cables, conduits shall be sealed with caulking compound to prevent entrance of moisture or gases into buildings.

3.9 GROUNDING

A ground ring consisting of the indicated configuration of bare copper conductors and driven ground rods shall be installed around pad-mounted equipment as shown. Equipment frames of metal-enclosed equipment, and other noncurrent-carrying metal parts, such as cable shields, cable sheaths and armor, and metallic conduit shall be grounded. At least 2 connections shall be provided from a transformer, and a switchgear ground bus to the ground mat. Metallic frames and covers of handholes and pull boxes shall be grounded by use of a braided, copper ground strap with equivalent ampacity of No. 6 AWG.

3.9.1 Grounding Electrodes

Grounding electrodes shall be installed as shown on the drawings and as

follows:

a. Driven rod electrodes - Unless otherwise indicated, ground rods shall be driven into the earth until the tops of the rods are approximately 1 foot below finished grade.

c. Ground ring - A ground ring shall be installed as shown consisting of bare copper conductors installed 24 inches, plus or minus 3 inches, below finished top of soil grade. Ground ring conductors shall be sized as shown.

3.9.2 Grounding and Bonding Connections

Connections above grade shall be made by the fusion-welding process or with bolted solderless connectors, in compliance with UL 467, and those below grade shall be made by a fusion-welding process. Where grounding conductors are connected to aluminum-composition conductors, specially treated or lined copper-to-aluminum connectors suitable for this purpose shall be used.

3.9.3 Grounding and Bonding Conductors

Grounding and bonding conductors include conductors used to bond transformer enclosures and equipment frames to the grounding electrode system. Grounding and bonding conductors shall be sized as shown, and located to provide maximum physical protection. Bends greater than 45 degrees in ground conductors are not permitted. Routing of ground conductors through concrete shall be avoided. When concrete penetration is necessary, nonmetallic conduit shall be cast flush with the points of concrete entrance and exit so as to provide an opening for the ground conductor, and the opening shall be sealed with a suitable compound after installation.

3.9.4 Surge Arrester Grounding

Surge arresters and neutrals shall be bonded directly to the transformer enclosure and then to the grounding electrode system with a bare copper conductor, sized as shown. Lead lengths shall be kept as short as practicable with no kinks or sharp bends.

3.9.5 Manhole, Handhole, or Concrete Pullbox Grounding

Ground rods installed in manholes, handholes, or concrete pullboxes shall be connected to cable racks, cable-pulling irons, the cable shielding, metallic sheath, and armor at each cable joint or splice by means of a No. 4 AWG braided tinned copper wire. Connections to metallic cable sheaths shall be by means of tinned terminals soldered to ground wires and to cable sheaths. Care shall be taken in soldering not to damage metallic cable sheaths or shields. Ground rods shall be protected with a double wrapping of pressure-sensitive plastic tape for a distance of 2 inches above and 6 inches below concrete penetrations. Grounding electrode conductors shall be neatly and firmly attached to manhole or handhole walls and the amount of exposed bare wire shall be held to a minimum.

3.9.6 Metal Splice Case Grounding

Metal splice cases for medium-voltage direct-burial cable shall be grounded by connection to a driven ground rod located within 2 feet of each splice box using a grounding electrode conductor having a current-carrying

capacity of at least 20 percent of the individual phase conductors in the associated splice box, but not less than No. 6 AWG.

3.9.7 Riser Pole Grounding

A single continuous vertical grounding electrode conductor shall be installed on each riser pole and connected directly to the grounding electrodes indicated on the drawings or required by these specifications. All equipment, neutrals, surge arresters, and items required to be grounded shall be connected directly to this vertical conductor. The grounding electrode conductor shall be sized as shown. Grounding electrode conductors shall be stapled to wood poles at intervals not exceeding2 feet.

3.10 FIELD TESTING

3.10.1 General

Field testing shall be performed in the presence of the Contracting Officer. The Contractor shall notify the Contracting Officer 7 days prior to conducting tests. The Contractor shall furnish all materials, labor, and equipment necessary to conduct field tests. The Contractor shall perform all tests and inspections recommended by the manufacturer unless specifically waived by the Contracting Officer. The Contractor shall maintain a written record of all tests which includes date, test performed, personnel involved, devices tested, serial number and name of test equipment, and test results. Field test reports shall be signed and dated by the Contractor.

3.10.2 Safety

The Contractor shall provide and use safety devices such as rubber gloves, protective barriers, and danger signs to protect and warn personnel in the test vicinity. The Contractor shall replace any devices or equipment which are damaged due to improper test procedures or handling.

3.10.3 Ground-Resistance Tests

The resistance of the ground ring shall be measured using the fall-of-potential method defined in IEEE Std 81. Ground resistance measurements shall be made before the electrical distribution system is energized and shall be made in normally dry conditions not less than 48 hours after the last rainfall. Resistance measurements of separate grounding electrode systems shall be made before the systems are bonded together below grade. The combined resistance of separate systems may be used to meet the required resistance, but the specified number of electrodes must still be provided.

a. Ground ring - 25 ohms.

3.10.4 Ground-Mat Connection Inspection

All below-grade ground-mat connections will be visually inspected by the Contracting Officer before backfilling. The Contractor shall notify the Contracting Officer 4 hours before the site is ready for inspection.

3.10.5 Medium-Voltage Cable Test

After installation and before the operating test or connection to an existing system, the medium-voltage cable system shall be given a high

potential test. Direct-current voltage shall be applied on each phase conductor of the system by connecting conductors as one terminal and connecting grounds or metallic shieldings or sheaths of the cable as the other terminal for each test. Prior to making the test, the cables shall be isolated by opening applicable protective devices and disconnecting equipment. The test shall be conducted with all splices, connectors, and terminations in place. The method, voltage, length of time, and other characteristics of the test for initial installation shall be in accordance with NEMA WC 7 or NEMA WC 8 for the particular type of cable installed, except that 28 kV and 35 kV insulation test voltages shall be in accordance with either AEIC CS5 or AEIC CS6 as applicable, and shall not exceed the recommendations of IEEE Std 404 for cable joints and IEEE Std 48 for cable terminations unless the cable and accessory manufacturers indicate higher voltages are acceptable for testing. Should any cable fail due to a weakness of conductor insulation or due to defects or injuries incidental to the installation or because of improper installation of cable, cable joints, terminations, or other connections, the Contractor shall make necessary repairs or replace cables as directed. Repaired or replaced cables shall be retested.

3.10.6 Low-Voltage Cable Test

Low-voltage cable, complete with splices, shall be tested for insulation resistance after the cables are installed, in their final configuration, ready for connection to the equipment, and prior to energization. The test voltage shall be 500 volts dc, applied for one minute between each conductor and ground and between all possible combinations conductors in the same trench, duct, or cable, with all other conductors in the same trench, duct, or conduit. The minimum value of insulation shall be:

R in megohms = (rated voltage in kV + 1) x 1000/(length of cable in feet

Each cable failing this test shall be repaired or replaced. The repaired cable shall be retested until failures have been eliminated.

3.10.7 Liquid-Filled Transformer Tests

The following field tests shall be performed on all liquid-filled transformers. Pass-fail criteria shall be in accordance with transformer manufacturer's specifications.

a. Insulation resistance test phase-to-ground.

b. Turns ratio test.

c. Correct phase sequence.

d. Correct operation of tap changer.

3.10.8 Dry-Type Transformer Tests

The following field tests shall be performed on all dry-type transformers . Pass-fail criteria shall be in accordance with the transformer manufacturer's specifications.

a. Insulation resistance test phase-to-ground.

b. Turns ratio test.

3.10.9 Circuit Breaker Tests

The following field tests shall be performed on circuit breakers. Pass-fail criteria shall be in accordance with the circuit breaker manufacturer's specifications.

a. Insulation resistance test phase-to-phase.

b. Insulation resistance test phase-to-ground.

c. Closed breaker contact resistance test.

d. Power factor test.

e. High-potential test.

f. Manual operation of the breaker.

3.10.10 Protective Relays

Protective relays shall be visually and mechanically inspected, adjusted, tested, and calibrated in accordance with the manufacturer's published instructions. Tests shall include pick-up, timing, contact action, restraint, and other aspects necessary to ensure proper calibration and operation. Relay settings shall be implemented in accordance with the coordination study. Relay contacts shall be manually or electrically operated to verify that the proper breakers and alarms initiate. Relaying current transformers shall be field tested in accordance with IEEE C57.13.

3.10.11 Pre-Energization Services

Calibration, testing, adjustment, and placing into service of the installation shall be accomplished by a manufacturer's product field service engineer or independent testing company with a minimum of 2 years of current product experience. The following services shall be performed on the equipment listed below. These services shall be performed subsequent to testing but prior to the initial energization. The equipment shall be inspected to ensure that installation is in compliance with the recommendations of the manufacturer and as shown on the detail drawings. Terminations of conductors at major equipment shall be inspected to ensure the adequacy of connections. Bare and insulated conductors between such terminations shall be inspected to detect possible damage during installation. If factory tests were not performed on completed assemblies, tests shall be performed after the installation of completed assemblies. Components shall be inspected for damage caused during installation or shipment to ensure packaging materials have been removed. Components capable of being both manually and electrically operated shall be operated manually prior to the first electrical operation. Components capable of being calibrated, adjusted, and tested shall be calibrated, adjusted, and tested in accordance with the instructions of the equipment manufacturer. Items for which such services shall be provided, but are not limited to, are the following:

a. Pad-mounted transformers

b. Panelboards

c. Switchboards

d. Switches

3.10.12 Operating Tests

After the installation is completed, and at such times as the Contracting Officer may direct, the Contractor shall conduct operating tests for approval. The equipment shall be demonstrated to operate in accordance with the requirements herein. An operating test report shall be submitted in accordance with paragraph SUBMITTALS.

3.11 MANUFACTURER'S FIELD SERVICE

3.11.1 Onsite Training

The Contractor shall conduct a training course for the operating staff as designated by the Contracting Officer. The training period shall consist of a total of 8 hours of normal working time and shall start after the system is functionally completed but prior to final acceptance tests. The course instruction shall cover pertinent points involved in operating, starting, stopping, and servicing the equipment, as well as all major elements of the operation and maintenance manuals. Additionally, the course instructions shall demonstrate all routine maintenance operations. A VHS format video tape of the entire training session shall be submitted.

3.11.2 Installation Engineer

After delivery of the equipment, the Contractor shall furnish one or more field engineers, regularly employed by the equipment manufacturer to supervise the installation of the equipment, assist in the performance of the onsite tests, initial operation, and instruct personnel as to the operational and maintenance features of the equipment.

3.12 ACCEPTANCE

Final acceptance of the facility will not be given until the Contractor has successfully completed all tests and after all defects in installation, material or operation have been corrected and as-built drawings are completed.

-- End of Section --

SECTION 16415

ELECTRICAL WORK, INTERIOR
02/02

PART 1 GENERAL

1.1 REFERENCES

The publications listed below form a part of this specification to the extent referenced. The publications are referred to in the text by basic designation only.

AMERICAN NATIONAL STANDARDS INSTITUTE (ANSI)

ANSI C12.10	(1997) Electromechanical Watthour Meters
ANSI C12.11	(1987; R 1993) Instrument Transformers for Revenue Metering, 10 kV BIL through 350 kV BIL (0.6 kV NSV through 69 kV NSV)
ANSI C39.1	(1981; R 1992) Requirements for Electrical Analog Indicating Instruments
ANSI C78.1	(1991; C78.1a; R 1996) Fluorescent Lamps - Rapid-Start Types - Dimensional and Electrical Characteristics
ANSI C78.1350	(1990) Electric Lamps - 400-Watt, 100-Volt, S51 Single-Ended High-Pressure Sodium Lamps
ANSI C78.1351	(1989) Electric Lamps - 250-Watt, 100-Volt S50 Single-Ended High-Pressure Sodium Lamps
ANSI C78.1352	(1990) Electric Lamps - 1000-Watt, 250-Volt, S52 Single-Ended High-Pressure Sodium Lamps
ANSI C78.1355	(1989) Electric Lamps - 150-Watt, 55-Volt S55 High-Pressure Sodium Lamps
ANSI C78.1375	(1996) 400-Watt, M59 Single-Ended Metal-Halide Lamps
ANSI C78.1376	(1996) 1000-Watt, M47 Metal-Halide Lamps
ANSI C78.20	(1995) Electric Lamps - Characteristics of Incandescent Lamps A, G, PS, and Similar Shapes with E26 Medium Screw Bases
ANSI C78.21	(1995) Physical and Electrical Characteristics - Incandescent Lamps - PAR and R Shapes
ANSI C78.2A	(1991) 18 & 26- Watt, Compact Fluorescent Quad Tube Lamps **

ANSI C78.2B	(1992) 9 & 13-Watt, Compact Fluorescent Quad Tube Lamps **
ANSI C82.1	(1997) Specifications for Fluorescent Lamp Ballasts \$18.00$\F\X Addenda D & E
ANSI C82.4	(1992) Ballasts for High-Intensity-Discharge and Low-Pressure Sodium Lamps (Multiple-Supply Type)

AMERICAN SOCIETY FOR TESTING AND MATERIALS (ASTM)

ASTM B 1	(1995) Hard-Drawn Copper Wire
ASTM B 8	(1999) Concentric-Lay-Stranded Copper Conductors, Hard, Medium-Hard, or Soft
ASTM D 709	(2000) Laminated Thermosetting Materials

INSTITUTE OF ELECTRICAL AND ELECTRONICS ENGINEERS (IEEE)

IEEE C37.20.1	(1993) Metal-Enclosed Low-Voltage Power Circuit-Breaker Switchgear
IEEE C57.13	(1993) Instrument Transformers
IEEE C62.41	(1991; R 1995) Surge Voltages in Low-Voltage AC Power Circuits
IEEE Std 242	(1986; R 1991) Recommended Practice for Protection and Coordination of Industrial and Commercial Power Systems
IEEE Std 399	(1997) Recommended Practice for Industrial and Commercial Power Systems Analysis
IEEE Std 81	(1983) Guide for Measuring Earth Resistivity, Ground Impedance, and Earth Surface Potentials of a Ground System (Part 1) \$31.00$\F

NATIONAL ELECTRICAL MANUFACTURERS ASSOCIATION (NEMA)

NEMA AB 1	(1993) Molded Case Circuit Breakers and Molded Case Switches
NEMA FU 1	(1986) Low Voltage Cartridge Fuses
NEMA ICS 1	(1993) Industrial Control and Systems
NEMA ICS 2	(1993) Industrial Controls and Systems Controllers, Contactors, and Overload Relays Rated Not More Than 2,000 Volts AC or 750 Volts DC
NEMA ICS 3	(1993) Industrial Control and Systems Factory Built Assemblies

NEMA ICS 6	(1993) Industrial Control and Systems, Enclosures
NEMA LE 4	(1987) Recessed Luminaires, Ceiling Compatibility
NEMA MG 1	(1998) Motors and Generators
NEMA MG 10	(1994) Energy Management Guide for Selection and Use of Polyphase Motors
NEMA OS 1	(1996) Sheet-Steel Outlet Boxes, Device Boxes, Covers, and Box Supports
NEMA OS 2	(1998) Nonmetallic Outlet Boxes, Device Boxes, Covers and Box Supports
NEMA PB 1	(1995) Panelboards
NEMA PB 2	(1995) Deadfront Distribution Switchboards
NEMA RN 1	(1998) Polyvinyl-Chloride (PVC) Externally Coated Galvanized Rigid Steel Conduit and Intermediate Metal Conduit
NEMA ST 20	(1992) Dry-Type Transformers for General Applications
NEMA TC 13	(1993) Electrical Nonmetallic Tubing (ENT)
NEMA TC 2	(1998) Electrical Polyvinyl Chloride (PVC) Tubing (EPT) and Conduit (EPC-40 and EPC-80)
NEMA VE 1	(1996) Metal Cable Tray Systems
NEMA WD 1	(1999) General Requirements for Wiring Devices
NEMA WD 6	(1997) Wiring Devices - Dimensional Requirements

NATIONAL FIRE PROTECTION ASSOCIATION (NFPA)

NFPA 101	(2000) Life Safety Code
NFPA 70	(2002) National Electrical Code

U.S. NATIONAL ARCHIVES AND RECORDS ADMINISTRATION (NARA)

47 CFR 18	Industrial, Scientific, and Medical Equipment

UNDERWRITERS LABORATORIES (UL)

UL 1	(2000) Flexible Metal Conduit
UL 1004	(1994; Rev thru Nov 1999) Electric Motors

UL 1010	(1995; Rev thru Mar 1999) Receptical-Plug Combinations for Use in Hazardous (Classified) Locations
UL 1022	(1998) Line Isolation Monitors
UL 1029	(1994; Rev thru Dec 1997) High-Intensity-Discharge Lamp Ballasts
UL 1047	(1995; Rev Jul 1998) Isolated Power Systems Equipment
UL 1242	(1996; Rev Mar 1998) Intermediate Metal Conduit
UL 1449	(1996; Rev thru Dec 1999) Transient Voltage Surge Suppressors
UL 1570	(1995; Rev thru Nov 1999) Fluorescent Lighting Fixtures
UL 1571	(1995; Rev thru Nov 1999) Incandescent Lighting Fixtures
UL 1572	(1995; Rev thru Nov 1999) High Intensity Discharge Lighting Fixtures
UL 1660	(2000) Liquid-Tight Flexible Nonmetallic Conduit
UL 198B	(1995) Class H Fuses
UL 198C	(1986; Rev thru Feb 1998) High-Interrupting-Capacity Fuses, Current-Limiting Types
UL 198D	(1995) Class K Fuses
UL 198E	(1988; Rev Jul 1988) Class R Fuses
UL 198G	(1988; Rev May 1988) Fuses for Supplementary Overcurrent Protection
UL 198H	(1988; Rev thru Nov 1993) Class T Fuses
UL 198L	(1995; Rev May 1995) D-C Fuses for Industrial Use
UL 20	(1995; Rev thru Oct 1998) General-Use Snap Switches
UL 360	(1996; Rev thru Oct 1997) Liquid-Tight Flexible Steel Conduit
UL 467	(1993; Rev thru Apr 1999) Grounding and Bonding Equipment
UL 486A	(1997; Rev thru Dec 1998) Wire Connectors and Soldering Lugs for Use with Copper

	Conductors
UL 486C	(1997; Rev thru Aug 1998) Splicing Wire Connectors
UL 486E	(1994; Rev thru Feb 1997) Equipment Wiring Terminals for Use with Aluminum and/or Copper Conductors
UL 489	(1996; Rev thru Dec 1998) Molded-Case Circuit Breakers, Molded-Case Switches, and Circuit-Breaker Enclosures
UL 498	(1996; Rev thru Jan 1999) Attachment Plugs and Receptacles
UL 5	(1996) Surface Metal Raceways and Fittings
UL 50	(1995; Rev thru Nov 1999) Enclosures for Electrical Equipment
UL 506	(1994; R Oct 1997) Specialty Transformers
UL 508	(1999) Industrial Control Equipment
UL 510	(1994; Rev thru Apr 1998) Polyvinyl Chloride, Polyethylene, and Rubber Insulating Tape
UL 512	(1993; Rev thru Mar 1999) Fuseholders
UL 514A	(1996; Rev Dec 1999) Metallic Outlet Boxes
UL 514B	(1997; Rev Oct 1998) Fittings for Cable and Conduit
UL 514C	(1996; Rev thru Dec 1999) Nonmetallic Outlet Boxes, Flush-Device Boxes, and Covers
UL 542	(1999) Lampholders, Starters, and Starter Holders for Fluorescent Lamps
UL 6	(1997) Rigid Metal Conduit
UL 651	(1995; Rev thru Oct 1998) Schedule 40 and 80 Rigid PVC Conduit
UL 651A	(1995; Rev thru Apr 1998) Type EB and A Rigid PVC Conduit and HDPE Conduit
UL 67	(1993; Rev thru Oct 1999) Panelboards
UL 674	(1994; Rev thru Oct 1998) Electric Motors and Generators for Use in Division 1 Hazardous (Classified) Locations
UL 698	(1995; Rev thru Mar 1999) Industrial Control Equipment for Use in Hazardous

	(Classified) Locations
UL 797	(1993; Rev thru Mar 1997) Electrical Metallic Tubing
UL 817	(1994; Rev thru May 1999) Cord Sets and Power-
UL 83	(1998; Rev thru Sep 1999) Thermoplastic-Insulated Wires and Cables
UL 844	(1995; Rev thru Mar 1999) Electric Lighting Fixtures for Use in Hazardous (Classified) Locations
UL 845	(1995; Rev thru Nov 1999) Motor Control Centers
UL 854	(1996; Rev Oct 1999) Service-Entrance Cables
UL 869A	(1998) Reference Standard for Service Equipment
UL 877	(1993; Rev thru Nov 1999) Circuit Breakers and Circuit-Breaker Enclosures for Use in Hazardous (Classified) Locations
UL 886	(1994; Rev thru Apr 1999) Outlet Boxes and Fittings for Use in Hazardous (Classified) Locations
UL 891	(1994; Rev thru Jan 1995) Dead-Front Switchboards
UL 916	(1998) Energy Management Equipment
UL 924	(1995; Rev thru Oct 97) Emergency Lighting and Power Equipment
UL 943	(1993; Rev thru May 1998) Ground-Fault Circuit-Interrupters
UL 98	(1994; Rev thru Jun 1998) Enclosed and Dead-Front Switches
UL Elec Const Dir	(1999) Electrical Construction Equipment Directory

1.2 GENERAL

1.2.1 Rules

The installation shall conform to the requirements of NFPA 70 and NFPA 101, unless more stringent requirements are indicated or shown.

1.2.2 Coordination

The drawings indicate the extent and the general location and arrangement of equipment, conduit, and wiring. The Contractor shall become familiar with all details of the work and verify all dimensions in the field so that the outlets and equipment shall be properly located and readily accessible. Lighting fixtures, outlets, and other equipment and materials shall be carefully coordinated with mechanical or structural features prior to installation and positioned according to architectural reflected ceiling plans; otherwise, lighting fixtures shall be symmetrically located according to the room arrangement when uniform illumination is required, or asymmetrically located to suit conditions fixed by design and shown. Raceways, junction and outlet boxes, and lighting fixtures shall not be supported from sheet metal roof decks. If any conflicts occur necessitating departures from the drawings, details of and reasons for departures shall be submitted and approved prior to implementing any change. The Contractor shall coordinate the electrical requirements of the mechanical work and provide all power related circuits, wiring, hardware and structural support, even if not shown on the drawings.

1.2.3 Special Environments

1.2.3.1 Weatherproof Locations

Wiring, Fixtures, and equipment in designated locations shall conform to NFPA 70 requirements for installation in damp or wet locations.

1.2.3.2 Ducts, Plenums and Other Air-Handling Spaces

Wiring and equipment in ducts, plenums and other air-handling spaces shall be installed using materials and methods in conformance with NFPA 70unless more stringent requirements are indicated in this specification or on the contract drawings.

1.2.4 Standard Products

Material and equipment shall be a standard product of a manufacturer regularly engaged in the manufacture of the product and shall essentially duplicate items that have been in satisfactory use for at least 2 years prior to bid opening. Materials shall be listed on the Material, Equipment and Fixture Lists as stated in 1.3.

1.2.5 Nameplates

1.2.5.1 Identification Nameplates

Major items of electrical equipment and major components shall be permanently marked with an identification name to identify the equipment by type or function and specific unit number as indicated. Designation of motors shall coincide with their designation in the motor control center or panel. Unless otherwise specified, identification nameplates shall be made of laminated plastic in accordance with ASTM D 709 with black outer layers and a white core. Edges shall be chamfered. Plates shall be fastened with black-finished round-head drive screws, except motors, or approved nonadhesive metal fasteners. When the nameplate is to be installed on an irregular-shaped object, the Contractor shall devise an approved support suitable for the application and ensure the proper installation of the supports and nameplates. In all instances, the nameplate shall be installed in a conspicuous location. At the option of the Contractor, the equipment manufacturer's standard embossed nameplate material with black paint-filled letters may be furnished in lieu of laminated plastic. The

front of each panelboard, motor control center, switchgear, and switchboard shall have a nameplate to indicate the phase letter, corresponding color and arrangement of the phase conductors. The following equipment, as a minimum, shall be provided with identification nameplates:

Minimum 1/4 inch High Letters	Minimum 1/8 inch High Letters
Panelboards	Control Power Transformers
Starters	Control Devices
Safety Switches	Instrument Transformers
Transformers	
Equipment Enclosures	
Switchboards	
Motors	

Each panel, section, or unit in motor control centers, switchgear or similar assemblies shall be provided with a nameplate in addition to nameplates listed above, which shall be provided for individual compartments in the respective assembly, including nameplates which identify "future," "spare," and "dedicated" or "equipped spaces."

1.2.6 As-Built Drawings

Following the project completion or turnover, within 30 days the Contractor shall furnish 2 sets of as-built drawings to the Contracting Officer.

1.2.7 Recessed Light Fixtures (RLF) Option

The Contractor has the option to substitute inch-pound (I-P) RLF to metric RLF. This option shall be coordinated with Section 09510 ACOUSTICAL CEILINGS.

1.3 SUBMITTALS

Government approval is required for submittals with a "G" designation; submittals not having a "G" designation are for information only. When used, a designation following the "G" designation identifies the office that will review the submittal for the Government. The following shall be submitted in accordance with Section 01330 SUBMITTAL PROCEDURES:

SD-02 Shop Drawings

Interior Electrical Equipment; G.

Detail drawings consisting of equipment drawings, illustrations, schedules, instructions, diagrams, and other information necessary to define the installation. Detail drawings shall show the rating of items and systems and how the components of an item and system are assembled, function together, and how they will be installed on the project. Data and drawings for component parts of an item or system shall be coordinated and submitted as a unit. Data and drawings shall be coordinated and included in a single submission. Multiple submissions for the same equipment or system are not acceptable except where prior approval has been obtained from the Contracting Officer. In such cases, a list of data to be submitted later shall be included with the first submission. Detail drawings shall show physical arrangement, construction details, connections, finishes, materials used in fabrication,

provisions for conduit or busway entrance, access requirements for installation and maintenance, physical size, electrical characteristics, foundation and support details, and equipment weight. Drawings shall be drawn to scale and/or dimensioned. Optional items shall be clearly identified as included or excluded. Detail drawings shall as a minimum include:

a. Transformers.

b. Switchgear.

c. Battery system including calculations for the battery and charger.

d. Voltage regulators.

e. Grounding resistors.

f. Motors and rotating machinery.

g. Motor control centers.

h. Single line electrical diagrams including primary, metering, sensing and relaying, control wiring, and control logic.

i. Sway bracing for suspended luminaires.

Structural drawings showing the structural or physical features of major equipment items, components, assemblies, and structures, including foundations or other types of supports for equipment and conductors. These drawings shall include accurately scaled or dimensioned outline and arrangement or layout drawings to show the physical size of equipment and components and the relative arrangement and physical connection of related components. Weights of equipment, components and assemblies shall be provided when required to verify the adequacy of design and proposed construction of foundations or other types of supports. Dynamic forces shall be stated for switching devices when such forces must be considered in the design of support structures. The appropriate detail drawings shall show the provisions for leveling, anchoring, and connecting all items during installation, and shall include any recommendations made by the manufacturer.

Electrical drawings including single-line and three-line diagrams, and schematics or elementary diagrams of each electrical system; internal wiring and field connection diagrams of each electrical device when published by the manufacturer; wiring diagrams of cabinets, panels, units, or separate mountings; interconnection diagrams that show the wiring between separate components of assemblies; field connection diagrams that show the termination of wiring routed between separate items of equipment; internal wiring diagrams of equipment showing wiring as actually provided for this project. Field wiring connections shall be clearly identified.

If departures from the contract drawings are deemed necessary by the Contractor, complete details of such departures, including changes in related portions of the project and the reasons why, shall be submitted with the detail drawings. Approved departures

shall be made at no additional cost to the Government.

SD-03 Product Data

Fault Current Analysis and Protective Device Coordination Study; G.

The study shall be submitted along with protective device equipment submittals. No time extensions or similar contract modifications will be granted for work arising out of the requirements for this study. Approval of protective devices proposed shall be based on recommendations of this study, The Government shall not be held responsible for any changes to equipment, device ratings, settings, or additional labor for installation of equipment or devices ordered and/or procured prior to approval of the study.

Manufacturer's Catalog; G.

Data composed of catalog cuts, brochures, circulars, specifications, product data, and printed information in sufficient detail and scope to verify compliance with the requirements of the contract documents.

Material, Equipment, and Fixture Lists; G.

A complete itemized listing of equipment and materials proposed for incorporation into the work. Each entry shall include an item number, the quantity of items proposed, and the name of the manufacturer of each item.

Installation Procedures; G.

Installation procedures for rotating equipment, transformers, switchgear, battery systems, voltage regulators, and grounding resistors. Procedures shall include diagrams, instructions, and precautions required to install, adjust, calibrate, and test devices and equipment.

As-Built Drawings; G

The as-built drawings shall be a record of the construction as installed. The drawings shall include all the information shown on the contract drawings, deviations, modifications, and changes from the contract drawings, however minor. The as-built drawings shall be kept at the job site and updated daily. The as-built drawings shall be a full-sized set of prints marked to reflect all deviations, changes, and modifications. The as-built drawings shall be complete and show the location, size, dimensions, part identification, and other information. Additional sheets may be added. The as-built drawings shall be jointly inspected for accuracy and completeness by the Contractor's quality control representative and by the Contracting Officer prior to the submission of each monthly pay estimate. Upon completion of the work, the Contractor shall submit three full sized sets of the marked prints to the Contracting Officer for approval. If upon review, the as-built drawings are found to contain errors and/or omissions, they will be returned to the Contractor for correction. The Contractor shall correct and return the as-built drawings to the Contracting Officer for approval within ten calendar days from

the time the drawings are returned to the Contractor.

Onsite Tests; G.

A detailed description of the Contractor's proposed procedures for on-site tests.

SD-06 Test Reports

Field Test Plan; G.

A detailed description of the Contractor's proposed procedures for onsite test submitted 20 days prior to testing the installed system. No field test will be performed until the test plan is approved. The test plan shall consist of complete field test procedures including tests to be performed, test equipment required, and tolerance limits.

Field Test Reports; G.

Six copies of the information described below in 8 1/2 x 11 inch binders having a minimum of 5 rings from which material may readily be removed and replaced, including a separate section for each test. Sections shall be separated by heavy plastic dividers with tabs.

a. A list of equipment used, with calibration certifications.

b. A copy of measurements taken.

c. The dates of testing.

d. The equipment and values to be verified.

e. The conditions specified for the test.

f. The test results, signed and dated.

g. A description of adjustments made.

h. Final position of controls and device settings.

SD-07 Certificates

Materials and Interior Electrical Equipment; G.

The label or listing of the Underwriters Laboratories, Inc., will be accepted as evidence that the materials or equipment conform to the applicable standards of that agency. In lieu of this label or listing, a statement from a nationally recognized, adequately equipped testing agency indicating that the items have been tested in accordance with required procedures and that the materials and equipment comply with all contract requirements will be accepted. However, materials and equipment installed in hazardous locations must bear the UL label unless the data submitted from other testing agency is specifically approved in writing by the Contracting Officer. Items which are required to be listed and labeled in accordance with Underwriters Laboratories must be affixed with a UL label that states that it is UL listed.

No exceptions or waivers will be granted to this requirement. Materials and equipment will be approved based on the manufacturer's published data.

For other than equipment and materials specified to conform to UL publications, a manufacturer's statement indicating complete compliance with the applicable standard of the American Society for Testing and Materials, National Electrical Manufacturers Association, or other commercial standard, is acceptable.

1.4 WORKMANSHIP

Materials and interior electrical equipment shall be installed in accordance with NFPA 70, recommendations of the manufacturer, manufacturer's catalog and as shown.

1.5 SEISMIC REQUIREMENTS

Seismic details shall conform to Section 13080 SEISMIC PROTECTION FOR MISCELLANEOUS EQUIPMENT.

PART 2 PRODUCTS

Products shall conform to the respective publications and other requirements specified below. Materials and equipment not listed below shall be as specified elsewhere in this section. Items of the same classification shall be identical including equipment, assemblies, parts, and components.

2.1 CABLES AND WIRES

Conductors No. 8 AWG and larger diameter shall be stranded. Conductors No. 10 AWG and smaller diameter shall be solid, except that conductors for remote control, alarm, and signal circuits, classes 1, 2, and 3, shall be stranded unless specifically indicated otherwise. Conductor sizes and ampacities shown are based on copper, unless indicated otherwise. All conductors shall be copper.

2.1.1 Equipment Manufacturer Requirements

When manufacturer's equipment requires copper conductors at the terminations or requires copper conductors to be provided between components of equipment, provide copper conductors or splices, splice boxes, and other work required to meet manufacturer's requirements.

2.1.2 Aluminum Conductors

Aluminum conductors shall not be used.

2.1.3 Insulation

Unless indicated otherwise, or required by NFPA 70, power and lighting wires shall be 600-volt, Type THWN, THHN, or THW conforming to UL 83, except that grounding wire may be type TW conforming to UL 83; remote-control and signal circuits shall be Type TW, THW or TF, conforming to UL 83. Where lighting fixtures require 90-degree Centigrade (C) conductors, provide only conductors with 90-degree C insulation or better.

2.1.4 Bonding Conductors

ASTM B 1, solid bare copper wire for sizes No. 8 AWG and smaller diameter; ASTM B 8, Class B, stranded bare copper wire for sizes No. 6 AWG and larger diameter.

2.1.5 Service Entrance Cables

Service entrance (SE) and underground service entrance (USE) cables, UL 854.

2.1.6 Tray Cable or Power Limited Tray Cable

UL listed; Type TC or PLTC.

2.1.7 Cord Sets and Power-Supply Cords

UL 817.

2.2 CABLE TRAYS

Cable tray shall conform to NEMA VE 1, shall form a wireway system, and shall be of nominal 6 inch depth. Cable trays shall be constructed of aluminum. Trays shall include splice and end plates, dropouts, and miscellaneous hardware. Edges, fittings, and hardware shall be finished free from burrs and sharp edges. Fittings shall have not less than the load-carrying ability of straight tray sections and shall have manufacturer's minimum standard radius.

2.2.1 Trough

Trough-type cable trays width shall be as indicated

2.2.2 Ladder

Ladder-type cable trays width shall be as indicated. Rung spacing shall be on 6 inch maximum centers.

2.3 TRANSIENT VOLTAGE SURGE PROTECTION

Transient voltage surge suppressors shall be provided as indicated. Surge suppressors shall meet the requirements of IEEE C62.41 and be UL listed and labeled as having been tested in accordance with UL 1449. Surge suppressor ratings shall be 400 volts line to neutral for 208 panels. volts rms, operating voltage; 60 Hz; 3-phase 4 wire with ground; transient suppression voltage (peak let-through voltage) of 520 volts line to neutral for 208 panels volts. Fuses shall not be used as surge suppression.

2.4 CIRCUIT BREAKERS

2.4.1 MOLDED-CASE CIRCUIT BREAKERS

Molded-case circuit breakers shall conform to NEMA AB 1 and UL 489and UL 877 for circuit breakers and circuit breaker enclosures located in hazardous (classified) locations. Circuit breakers may be installed in panelboards, switchboards, enclosures, motor control centers, or combination motor controllers.

2.4.1.1 Construction

Circuit breakers shall be suitable for mounting and operating in any

position. Lug shall be listed for copper conductors in accordance with UL 486E. Single-pole circuit breakers shall be full module size with not more than one pole per module. Multi-pole circuit breakers shall be of the common-trip type having a single operating handle such that an overload or short circuit on any one pole will result in all poles opening simultaneously. Sizes of 100 amperes or less may consist of single-pole breakers permanently factory assembled into a multi-pole unit having an internal, mechanical, nontamperable common-trip mechanism and external handle ties. All circuit breakers shall have a quick-make, quick-break overcenter toggle-type mechanism, and the handle mechanism shall be trip-free to prevent holding the contacts closed against a short-circuit or sustained overload. All circuit breaker handles shall assume a position between "ON" and "OFF" when tripped automatically. All ratings shall be clearly visible.

2.4.1.2 Ratings

Voltage ratings shall be not less than the applicable circuit voltage. The interrupting rating of the circuit breakers shall be at least equal to the available short-circuit current at the line terminals of the circuit breaker and correspond to the UL listed integrated short-circuit current rating specified for the panelboards and switchboards. Molded-case circuit breakers shall have nominal voltage ratings, maximum continuous-current ratings, and maximum short-circuit interrupting ratings in accordance with NEMA AB 1. Ratings shall be coordinated with system X/R ratio.

2.4.1.3 Thermal-Magnetic Trip Elements

Thermal magnetic circuit breakers shall be provided as shown. Automatic operation shall be obtained by means of thermal-magnetic tripping devices located in each pole providing inverse time delay and instantaneous circuit protection. The instantaneous magnetic trip shall be adjustable and accessible from the front of all circuit breakers on frame sizes above 150 amperes.

2.4.2 Solid-State Trip Elements

Solid-state circuit breakers shall be provided as shown. All electronics shall be self-contained and require no external relaying, power supply, or accessories. Printed circuit cards shall be treated to resist moisture absorption, fungus growth, and signal leakage. All electronics shall be housed in an enclosure which provides protection against arcs, magnetic interference, dust, and other contaminants. Solid-state sensing shall measure true RMS current with error less than one percent on systems with distortions through the 13th harmonic. Peak or average actuating devices are not acceptable. Current sensors shall be torodial construction, encased in a plastic housing filled with epoxy to protect against damage and moisture and shall be integrally mounted on the breaker. Where indicated on the drawings, circuit breaker frames shall be rated for 100 percent continuous duty. Circuit breakers shall have tripping features as shown on the drawings and as described below:

a. Long-time current pick-up, adjustable from 50 percent to 100 percent of continuous current rating.

b. Adjustable long-time delay.

c. Short-time current pick-up, adjustable from 1.5 to 9 times long-time current setting.

d. Adjustable short-time delay.

e. Short-time I square times t switch.

f. Instantaneous current pick-up, adjustable from 1.5 to 9 times long-time current setting.

g. Ground-fault pick-up, adjustable from 20 percent to 60 percent of sensor rating, but not greater than 1200 amperes. Sensing of ground-fault current at the main bonding jumper or ground strap will not be permitted. Zone-selective interlocking shall be provided as shown.

h. Adjustable ground-fault delay.

i. Ground-fault I square times t switch.

j. Short-time and ground-fault trip indicators shall be provided.

2.4.3 Current-Limiting Circuit Breakers

Current-limiting circuit breakers shall be provided as shown. Current-limiting circuit breakers shall limit the let-through I square times t to a value less than the I square times t of one-half cycle of the symmetrical short-circuit current waveform. On fault currents below the threshold of limitation, breakers shall provide conventional overload and short-circuit protection. Integrally-fused circuit breakers shall not be used.

2.4.4 SWD Circuit Breakers

Circuit breakers rated 15 amperes and intended to switch 277 volts or less fluorescent lighting loads shall be marked "SWD."

2.4.5 HACR Circuit Breakers

Circuit breakers 60 amperes or below, 240 volts, 1-pole or 2-pole, intended to protect multi-motor and combination-load installations involved in heating, air conditioning, and refrigerating equipment shall be marked "Listed HACR Type."

2.4.6 Ground Fault Circuit Interrupters

UL 943. Breakers equipped with ground fault circuit interrupters shall have ground fault class, interrupting capacity, and voltage and current ratings as indicated.

2.5 MOTOR SHORT-CIRCUIT PROTECTOR (MSCP)

Motor short-circuit protectors shall conform to UL 508 and shall be provided as shown. Protectors shall be used only as part of a combination motor controller which provides coordinated motor branch-circuit overload and short-circuit protection, and shall be rated in accordance with the requirements of NFPA 70.

2.5.1 Construction

Motor short-circuit protector bodies shall be constructed of high

temperature, dimensionally stable, long life, nonhygroscopic materials. Protectors shall fit special MSCP mounting clips and shall not be interchangeable with any commercially available fuses. Protectors shall have 100 percent one-way interchangeability within the A-Y letter designations. All ratings shall be clearly visible.

2.5.2 Ratings

Voltage ratings shall be not less than the applicable circuit voltage. Letter designations shall be A through Y for motor controller Sizes 0, 1, 2, 3, 4, and 5, with 100,000 amperes interrupting capacity rating. Letter designations shall correspond to controller sizes as follows:

CONTROLLER SIZE	MSCP DESIGNATION
NEMA O	A-N
NEMA 1	A-P
NEMA 2	A-S
NEMA 3	A-U
NEMA 4	A-W
NEMA 5	A-Y

2.6 CONDUIT AND TUBING

2.6.1 Electrical, Zinc-Coated Steel Metallic Tubing (EMT)

UL 797

2.6.2 Electrical Nonmetallic Tubing (ENT)

NEMA TC 13.

2.6.3 Electrical Plastic Tubing and Conduit

NEMA TC 2.

2.6.4 Flexible Conduit, Steel and Plastic

General-purpose type, UL 1; liquid tight, UL 360, and UL 1660.

2.6.5 Intermediate Metal Conduit

UL 1242.

2.6.6 PVC Coated Rigid Steel Conduit

NEMA RN 1.

2.6.7 Rigid Metal Conduit

UL 6.

2.6.8 Rigid Plastic Conduit

NEMA TC 2, UL 651 and UL 651A.

2.6.9 Surface Metal Electrical Raceways and Fittings

UL 5.

2.7 CONDUIT AND DEVICE BOXES AND FITTINGS

2.7.1 Boxes, Metallic Outlet

NEMA OS 1 and UL 514A.

2.7.2 Boxes, Nonmetallic, Outlet and Flush-Device Boxes and Covers

NEMA OS 2 and UL 514C.

2.7.3 Boxes, Outlet for Use in Hazardous (Classified) Locations

UL 886.

2.7.4 Boxes, Switch (Enclosed), Surface-Mounted

UL 98.

2.7.5 Fittings for Conduit and Outlet Boxes

UL 514B.

2.7.6 Fittings For Use in Hazardous (Classified) Locations

UL 886.

2.7.7 Fittings, PVC, for Use with Rigid PVC Conduit and Tubing

UL 514B.

2.8 CONDUIT COATINGS PLASTIC RESIN SYSTEM

NEMA RN 1, Type A-40.

2.9 CONNECTORS, WIRE PRESSURE

2.9.1 For Use With Copper Conductors

UL 486A.

2.10 ELECTRICAL GROUNDING AND BONDING EQUIPMENT

UL 467.

2.10.1 Ground Rods

Ground rods shall be of copper-clad steel conforming to UL 467 not less than 3/4 inch in diameter by 10 feet in length of the sectional type driven full length into the earth.

2.10.2 Ground Bus

The ground bus shall be bare conductor or flat copper in one piece, if

practicable.

2.11 ENCLOSURES

NEMA ICS 6 or UL 698 for use in hazardous (classified) locations, unless otherwise specified.

2.11.1 Cabinets and Boxes

Cabinets and boxes with volume greater than 100 cubic inches shall be in accordance with UL 50, hot-dip, zinc-coated, if sheet steel.

2.11.2 Circuit Breaker Enclosures

UL 489.

2.11.3 Circuit Breaker Enclosures for Use in Hazardous (Classified) Locations

UL 877.

2.12 LIGHTING FIXTURES, LAMPS, BALLASTS, EMERGENCY EQUIPMENT, CONTROLS AND ACCESSORIES

The following specifications are supported and supplemented by information and details on the drawings. Additional fixtures, if shown, shall conform to this specification. Lighting equipment installed in classified hazardous locations shall conform to UL 844. Lamps, lampholders, ballasts, transformers, electronic circuitry and other lighting system components shall be constructed according to industry standards. Equipment shall be tested and listed by a recognized independent testing laboratory for the expected installation conditions. Equipment shall conform to the standards listed below.

2.12.1 Lamps

Lamps shall be constructed to operate in the specified fixture, and shall function without derating life or output as listed in published data. Lamps shall meet the requirements of the Energy Policy Act of 1992.

a. Incandescent and tungsten halogen lamps shall be designed for 125 volt operation (except for low voltage lamps), shall be rated for minimum life of 2,000 hours, and shall have color temperature between 2,800 and 3,200 degrees Kelvin. Tungsten halogen lamps shall incorporate quartz capsule construction. Lamps shall comply with ANSI C78.20 and sections 238 and 270 of ANSI C78.21.

b. Fluorescent lamps shall have color temperature as shown. They shall be designed to operate with the ballasts and circuitry of the fixtures in which they will be used. Fluorescent lamps, including spares, shall be manufactured by one manufacturer to provide for color and performance consistency. Fluorescent lamps shall comply with ANSI C78.1. Fluorescent tube lamp efficiencies shall meet or exceed the following requirements.

T8, 32 watts	(4' lamp)	2800 lumens
T8/U,31-32 watts	(U-tube)	2600 lumens

(1) Linear fluorescent lamps, unless otherwise indicated, shall be 4 feet long 32 watt T8, 265 mA, with minimum CRI of 75. Lamps of other lengths or types shall be used only where specified or shown. Lamps shall deliver rated life when operated on instant start ballasts.

(2) Small compact fluorescent lamps shall be twin, double, or triple tube configuration as shown with bi-pin or four-pin snap-in base and shall have minimum CRI of 85. They shall deliver rated life when operated on ballasts as shown. 9 and 13 watt double tube lamps shall comply with ANSI C78.2B. 18 and 26 watt double tube lamps shall comply with ANSI C78.2A. Minimum starting temperature shall be 32 degrees F for twin tube lamps and for double and triple twin tube lamps without internal starter; and 15 degrees F for double and triple twin tube lamps with internal starter.

c. High intensity discharge lamps, including spares, shall be manufactured by one manufacturer in order to provide color and performance consistency. High intensity discharge lamps shall be designed to operate with the ballasts and circuitry of the fixtures in which they will be used and shall have wattage, shape and base as shown. High intensity discharge lamps, unless otherwise shown, shall have medium or mogul screw base and minimum starting temperature of -20 degrees F. Metal halide lamps, unless otherwise shown, shall have minimum CRI of 65; color temperature of 4,300 degrees Kelvin; shall be -BU configuration if used in base-up position; and shall be -H or high output configuration if used in horizontal position. Lamps shall comply with all applicable ANSI C78.1350, ANSI C78.1351, ANSI C78.1352, ANSI C78.1355,ANSI C78.1375, and ANSI C78.1376.

2.12.2 Ballasts and Transformers

Ballasts or transformers shall be designed to operate the designated lamps within their optimum specifications, without derating the lamps. Lamp and ballast combinations shall be certified as acceptable by the lamp manufacturer.

a. Low voltage incandescent transformers shall be Class II UL listed 120/12 volt or 120/24 volt step-down transformers as required for the lamps shown. Transformers shall be high power factor type and shall be rated for continuous operation under the specified load. Transformers shall be encased or encased and potted, and mounted integrally within the lighting fixture unless otherwise shown.

b. Fluorescent ballasts shall comply with ANSI C82.1 and shall be mounted integrally within fluorescent fixture housing unless otherwise shown. Ballasts shall have maximum current crest factor of 1.7; high power factor; Class A sound rating; maximum operating case temperature of 77 degrees F above ambient; and shall be rated Class P. Unless otherwise indicated, the minimum number of ballasts shall be used to serve each individual fixture. A single ballast may be used to serve multiple fixtures if they are continuously mounted, identically controlled and factory manufactured for that installation with an integral wireway.

(1) Compact fluorescent ballasts shall comply with IEEE C62.41

Category A transient voltage variation requirements and shall be mounted integrally within compact fluorescent fixture housing unless otherwise shown. Ballasts shall have minimum ballast factor of 0.95; maximum current crest factor of 1.6; high power factor; maximum operating case temperature of 77 degrees F above ambient; shall be rated Class P; and shall have a sound rating of Class A. Ballasts shall meet FCC Class A specifications for EMI/RFI emissions. Ballasts shall operate from nominal line voltage of as indicated at 60 Hz and maintain constant light output over a line voltage variation of ± 10%. Ballasts shall have an end-of-lamp-life detection and shut-down circuit. Ballasts shall be UL listed and shall contain no PCBs. Ballasts shall contain potting to secure PC board, provide lead strain relief, and provide a moisture barrier.

(2) Electronic fluorescent ballasts shall comply with 47 CFR 18 for electromagnetic interference. Ballasts shall withstand line transients per IEEE C62.41, Category A. Ballasts shall have total harmonic distortion between 10 and 20%; minimum frequency of 20,000Hz; filament voltage between 2.5 and 4.5 volts; maximum starting inrush current of 20 amperes; and shall comply with the minimum Ballast Efficacy Factors shown in the table below. Minimum starting temperature shall be 0 degrees F. Ballasts shall carry a manufacturer's full warranty of three years, including a minimum $10 labor allowance per ballast.

ELECTRONIC FLUORESCENT BALLAST EFFICACY FACTORS

LAMP TYPE	TYPE OF STARTER & LAMP	NOMINAL OPERATIONAL VOLTAGE	NUMBER OF LAMPS	MINIMUM BALLAST EFFICACY FACTOR
32W T8	rapid start linear & U-tubes	120 or 277 V	1	2.54
			2	1.44
			3	0.93
			4	0.73
34W T12	rapid start linear & U-tubes	120 or 277 V	1	2.64
			2	1.41
			3	0.93

(4) Dimming fluorescent ballasts shall be electronic and shall comply with the applicable electronic ballast specifications shown above. Dimming ballasts shall be compatible with the specified dimming control equipment and shall operate the lamps shown in the range from full rated light output to 1 percent of full rated light output. Dimming ballasts shall provide smooth square law dimming such that perceived dimming action is proportionate to the motion of the dimming control. Single or two-lamp dimming ballasts shall be used. Multi-lamp dimming ballasts shall be designed to operate lamps of the same length and current rating.

(5) Dimming compact fluorescent ballasts shall be electronic and shall comply with the applicable compact fluorescent and dimming ballast specifications shown above. Ballasts shall operate the

lamps shown in the range from full rated light output to 5 percent of full rated light output. Ballast power factor shall be <90% throughout dimming range. THD shall be <10% at maximum light output and <20% at minimum light output. Ballast shall ignite the lamps at any light output setting selected.

c. High intensity discharge ballasts shall comply with UL 1029 and, if multiple supply types, with ANSI C82.4. Ballasts shall have minimum ballast factor of 0.9; high power factor; Class A sound rating; and maximum operating case temperature of 77 degrees F above ambient.

(1) Electronic high intensity discharge ballasts shall be constant wattage autotransformer type; shall have less than 10% ballast loss; shall have total harmonic distortion between 10 and 20%; and shall have a minimum starting temperature of 0 degrees F.

(2) Magnetic high intensity discharge ballasts shall have a minimum starting temperature of -20 degrees F.

2.12.3 Fixtures

Fixtures shall be in accordance with the size, shape, appearance, finish, and performance shown. Unless otherwise indicated, lighting fixtures shall be provided with housings, junction boxes, wiring, lampholders, mounting supports, trim, hardware and accessories for a complete and operable installation. Recessed housings shall be minimum 20 gauge cold rolled or galvanized steel as shown. Extruded aluminum fixtures shall have minimum wall thickness of 0.125 inches. Plastic lenses shall be 100% virgin acrylic or as shown. Glass lenses shall be tempered. Heat resistant glass shall be borosilicate type. Conoid recessed reflector cones shall be Alzak with clear specular low iridescent finish.

a. Incandescent fixtures shall comply with UL 1571. Incandescent fixture specular reflector cone trims shall be integral to the cone and shall be finished to match. Painted trim finishes shall be white with minimum reflectance of 88%. Low voltage incandescent fixtures shall have integral step-down transformers.

b. Fluorescent fixtures shall comply with UL 1570. Recessed ceiling fixtures shall comply with NEMA LE 4. Fixtures shall be plainly marked for proper lamp and ballast type to identify lamp diameter, wattage, color and start type. Marking shall be readily visible to service personnel, but not visible from normal viewing angles. Fluorescent fixture lens frames on recessed and surface mounted troffers shall be one assembly with mitered corners. Parabolic louvers shall have a low iridescent finish and 45 degree cut-off. Louver intersection joints shall be hairline type and shall conceal mounting tabs or other assembly methods. Louvers shall be free from blemishes, lines or defects which distort the visual surface. Integral ballast and wireway compartments shall be easily accessible without the use of special tools. Housings shall be constructed to include grounding necessary to start the lamps. Open fixtures shall be equipped with a sleeve, wire guard, or other positive means to prevent lamps from falling. Medium bi-pin lampholders shall be twist-in type with positive locking position. Long compact fluorescent fixtures and fixtures utilizing U-bend lamps shall have clamps or secondary lampholders to support the free ends of the lamps.

c. High intensity discharge fixture shall comply with UL 1572. Recessed ceiling fixtures shall comply with NEMA LE 4. Reflectors shall be anodized aluminum. Fixtures for horizontal lamps shall have position oriented lampholders. Lampholders shall be pulse-rated to 5,000 volts. Fixtures indicated as classified or rated for hazardous locations or special service shall be designed and independently tested for the environment in which they are installed. Recessed lens fixtures shall have extruded aluminum lens frames. Ballasts shall be integral to fixtures and shall be accessible without the use of special tools. Remote ballasts shall be encased and potted. Lamps shall be shielded from direct view with a UV absorbing material such as tempered glass, and shall be circuited through a cut-off switch which will shut off the lamp circuit if the lens is not in place.

d. Emergency lighting fixtures and accessories shall be constructed and independently tested to meet the requirements of applicable codes. Batteries shall be Nicad or equal with no required maintenance, and shall have a minimum life expectancy of five years and warranty period of three years.

e. Exit Signs

Exit signs shall be ENERGY STAR compliant, thereby meeting the following requirements. Input power shall be less than 5 watts per face. Letter size and spacing shall adhere to NFPA 101. Luminance contrast shall be greater than 0.8. Average luminance shall be greater than 15 cd/m^2 measured at normal (0 degree) and 45 degree viewing angles. Minimum luminance shall be greater than 8.6 cd/m^2 measured at normal and 45 degree viewing angles. Maximum to minimum luminance shall be less than 20:1 measured at normal and 45 degree viewing angles. The manufacturer warranty for defective parts shall be at least 5 years.

2.12.4 Lampholders, Starters, and Starter Holders

UL 542

2.12.5 Ultrasonic, and Passive Infrared Occupancy Sensors

UL 916

2.13 LOW-VOLTAGE FUSES AND FUSEHOLDERS

2.13.1 Fuses, Low Voltage Cartridge Type

NEMA FU 1.

2.13.2 Fuses, High-Interrupting-Capacity, Current-Limiting Type

Fuses, Class G, J, L and CC shall be in accordance with UL 198C.

2.13.3 Fuses, Class K, High-Interrupting-Capacity Type

UL 198D.

2.13.4 Fuses, Class H

UL 198B.

2.13.5 Fuses, Class R

UL 198E.

2.13.6 Fuses, Class T

UL 198H.

2.13.7 Fuses for Supplementary Overcurrent Protection

UL 198G.

2.13.8 Fuses, D-C for Industrial Use

UL 198L.

2.13.9 Fuseholders

UL 512.

2.14 INSTRUMENTS, ELECTRICAL INDICATING

ANSI C39.1.

2.15 MOTORS, AC, FRACTIONAL AND INTEGRAL

Motors, ac, fractional and integral horsepower, 500 hp and smaller shall conform to NEMA MG 1 and UL 1004for motors; NEMA MG 10 for energy management selection of polyphase motors; and UL 674 for use of motors in hazardous (classified) locations. In addition to the standards listed above, motors shall be provided with efficiencies as specified in the table "MINIMUM NOMINAL EFFICIENCIES" below.

2.15.1 Rating

The horsepower rating of motors should be limited to no more than 125 percent of the maximum load being served unless a NEMA standard size does not fall within this range. In this case, the next larger NEMA standard motor size should be used.

2.15.2 Motor Efficiencies

All permanently wired polyphase motors of 1 hp or more shall meet the minimum full-load efficiencies as indicated in the following table, and as specified in this specification. Motors of 1 hp or more with open, drip proof or totally enclosed fan cooled enclosures shall be high efficiency type, unless otherwise indicated. Motors provided as an integral part of motor driven equipment are excluded from this requirement if a minimum seasonal or overall efficiency requirement is indicated for that equipment by the provisions of another section.

Minimum Motor Efficiencies

HP	Std. Efficiency	High Efficiency
1	77.0	85.5

Minimum Motor Efficiencies

HP	Std. Efficiency	High Efficiency
1.5	78.5	85.5
2	78.5	85.5
3	78.5	88.5
5	82.5	88.5
7.5	84.0	90.0
10	85.5	90.0
15	85.5	91.0
20	87.5	92.0
25	88.5	92.0
30	88.5	92.0
40	88.5	92.0
50	89.0	92.5
60	89.0	92.5
75	89.0	95.5
100	90.0	93.5
125	91.0	94.5
150	91.0	94.5
200	91.0	94.5
250	91.0	94.5
300	91.0	94.5
350	91.0	94.5
400	91.0	94.5
500	91.0	94.5

2.16 GENERAL

a. Motors 1/2 hp and Larger: Polyphase, unless indicated otherwise.

b. Motors Smaller than 1/2 hp: Single-phase, unless indicated otherwise.

c. Frequency Rating: 60 hertz. Provide motors capable of operating at full load within a frequency range of 57 to 63 hertz.

d. Voltage Rating: Motors shall be capable of operating at full load within a motor terminal voltage of +/-10% of nameplate voltage. Determined by voltage of circuit to which motor is connected for the following motor voltage ratings (utilization voltages):

(1) 120V Circuit: 115V - motor rating.

(2) 208V Circuit: 200V - motor rating.

(3) 240V Circuit: 230V - motor rating.

(4) 480V Circuit: 460V - motor rating.

(5) 4160V Circuit: 4000V - motor rating.

e. Service factors indicated for motors are minimum values and apply at frequency and utilization voltage at which motor is connected.

f. Capacity: Sufficient to start and operate connected loads at designated speeds in indicated environment, and with indicated

operating sequence, without exceeding nameplate ratings. Provide motors rated for continuous duty at 100% of rated capacity. Frequency of starts shall be as indicated or specified and in no case shall be less than five evenly timed and spaced starts per hour.

g. Temperature Rise: Based on 40 degrees C ambient except as otherwise indicated.

h. Enclosure Type:

(1) Totally enclosed, fan cooled (TEFC) for use where motors are mounted in air streams, wet or dirty atmospheres.

(2) Explosionproof with integral winding thermostat in explosive gas atmospheres.

i. Noise Rating: "Quiet" rating on motors located in occupied spaces of building.

j. Nameplate: Indicate the full identification of manufacturer, ratings, characteristics, construction, special features and similar information.

2.16.1 Polyphase Motors

a. General: Squirrel-cage induction-type conforming to the following requirements, except as otherwise indicated. Provide Class B insulation unless Class F is recommended by the equipment manufacturer for the application.

b. NEMA Design Letter Designation: "B" unless another NEMA design is required by the load being driven by the motor.

c. Multi-Speed Motors: Separate winding for each speed.

d. Energy Efficient Motors: Nominal efficiency equal to or greater than that stated in NEMA MG 1, Table 12-6C for that type and rating of motor.

e. Variable Speed Motors for Use with Solid-State Drives: Energy efficient, squirrel-cage induction, NEMA design B units with ratings, characteristics, and features coordinated with and approved by the solid-state drive manufacturer.

f. Bearings: Double-shielded, prelubricated ball bearings suitable for radial and thrust loading of the application. Minimum bearing life for continuous operation of 50,000 hours and to conform to AFBMA, unless otherwise indicated.

g. Where indicated or specified, provide motors for reduced voltage starting. Coordinate with indicated reduced voltage controller type and with characteristics of driven equipment load. Provide required wiring leads in motor terminal box to suit control method.

2.16.2 Single-Phase Motors

a. General: Conform to the following requirements except as otherwise indicated. Provide Class A insulation unless the

equipment manufacturer recommends another type for the application.

b. Energy Efficient Motors: One of the following types as selected to suit the starting torque and other requirements of the specific motor application.

(1) Permanent Split Capacitor.

(2) Split-Phase Start, Capacitor-Run.

(3) Capacitor-Start, Capacitor-Run.

c. Shaded-Pole Motors: Use only for motors smaller than 1/20 hp. Internal Thermal Overload Protection for Motors: For motors protection automatically opens the power supply circuit to the motor. Protection operates when winding temperature exceeds a safe value calibrated to the temperature rating of the motor insulation. Provide device that automatically resets when motor temperature returns to normal range, except as otherwise indicated.

d. Bearings, belt connected motors, and other motors with high radial forces on motor shaft shall be ball bearing type. Sealed, prelubricated sleeve bearings may be used for other single-phase motors. Minimum bearing life for continuous, operation of 50,000 hours (8,800 hours for sleeve bearings) and to conform to AFBMA, unless otherwise indicated.

2.17 MOTOR CONTROLS

2.17.1 General

NEMA ICS 1, NEMA ICS 2, NEMA ICS 3 and NEMA ICS 6, and UL 508 and UL 845. Except as otherwise indicated, provide motor controllers (motor starters) and control components which comply with manufacturer's standard materials, design, and construction in accordance with published product information, and as required for a complete installation. Provide NEMA rated motor controllers. Provide terminals UL rated for 75 degrees C (minimum) conductors. All motor starters and controllers shall be the product of a single manufacturer.

2.17.2 Combination Disconnect and Full Voltage Controllers

Provide full-voltage nonreversing (FVNR) or full voltage reversing (FVR), alternating-current combination controllers, consisting of controller, fused 120V control transformer, push buttons, selector switches, indicating lights, mounted in common enclosure, of types, sizes, ratings, and NEMA sizes required. Equip controller with electrical interlocks specified and indicated. Provide controller with two normally open and two normally closed spare auxiliary contacts. Equip controller with block type manual external reset three-phase overload relay. Provide operating handle for disconnect mechanism capable of being locked in OFF position. Construct and mount controllers and disconnect mechanism in single NEMA Type 12 enclosure for indoor, dry, non-hazardous locations. Coat with manufacturer's standard color finish.

2.17.3 Combination Disconnect and Two-Speed Controller

Provide two-speed alternating-current controllers, of NEMA sizes, ratings, and electrical characteristics indicated or required, suitable for use with

motors with two separate windings. Provide integral main thermal magnetic circuit breaker or main motor circuit protector. Manufacturer shall size and coordinate the main protective device with the characteristics of the controller, motor and load furnished to provide proper protection by the main protective device, without nuisance tripping. Controller shall have two 3-pole contactors, fused 120V control transformer, push buttons, selector switches, indicating lights, and two 3-pole manual external reset motor overload relays. Provide controller with electrical interlocks specified and as required. Provide two normally open and two normally closed spare auxiliary contacts. Provide operating handle for main circuit protective mechanism capable of being locked in OFF position. Enclose controller unit in NEMA Type 12 enclosure for indoor, dry, nonhazardous locations. Coat enclosure with manufacturer's standard color finish.

2.17.4 Reduced-Voltage Starters

Reduced-voltage starters shall be provided for polyphase motors 30 hp or larger. Reduced-voltage starters shall be of the single-step autotransformer, reactor, or resistor type having an adjustable time interval between application of reduced and full voltages to the motors. Wye-delta reduced voltage starter or part winding increment starter having an adjustable time delay between application of voltage to first and second winding of motor may be used in lieu of the reduced voltage starters specified above for starting of motor-generator sets, centrifugally operated equipment or reciprocating compressors provided with automatic unloaders.

2.17.5 Thermal-Overload Protection

Each motor of 1/8 hp or larger shall be provided with thermal-overload protection. Polyphase motors shall have overload protection in each ungrounded conductor. The overload-protection device shall be provided either integral with the motor or controller, or shall be mounted in a separate enclosure. Unless otherwise specified, the protective device shall be of the manually reset type. Single or double pole tumbler switches specifically designed for alternating-current operation only may be used as manual controllers for single-phase motors having a current rating not in excess of 80 percent of the switch rating.

2.17.6 Low-Voltage Motor Overload Relays

2.17.7 Low-Voltage Motor Overload Relays

2.17.7.1 General

Thermal overload relays shall conform to NEMA ICS 2 and UL 508. Overload protection shall be provided either integral with the motor or motor controller, and shall be rated in accordance with the requirements of NFPA 70.

2.17.7.2 Construction

Manual reset type thermal relay shall be melting alloy or bimetallic construction. Automatic reset type thermal relays shall be bimetallic construction. Magnetic current relays shall consist of a contact mechanism and a dash pot mounted on a common frame.

2.17.7.3 Ratings

Voltage ratings shall be not less than the applicable circuit voltage. Trip current ratings shall be established by selection of the replaceable overload device and shall not be adjustable. Where the controller is remotely-located or difficult to reach, an automatic reset, non-compensated overload relay shall be provided. Manual reset overload relays shall be provided otherwise, and at all locations where automatic starting is provided. Where the motor is located in a constant ambient temperature, and the thermal device is located in an ambient temperature that regularly varies by more than minus 18 degrees F, an ambient temperature-compensated overload relay shall be provided.

2.18.5 Automatic Control Devices

2.18.5.1 Direct Control

Automatic control devices (such as thermostats, float or pressure switches) which control the starting and stopping of motors directly shall be designed for that purpose and have an adequate horsepower rating.

2.18.5.2 Pilot-Relay Control

Where the automatic-control device does not have such a rating, a magnetic starter shall be used, with the automatic-control device actuating the pilot-control circuit.

2.18.5.3 Manual/Automatic Selection

a. Where combination manual and automatic control is specified and the automatic-control device operates the motor directly, a double-throw, three-position tumbler or rotary switch (marked MANUAL-OFF-AUTOMATIC) shall be provided for the manual control.

b. Where combination manual and automatic control is specified and the automatic-control device actuates the pilot control circuit of a magnetic starter, the magnetic starter shall be provided with a three-position selector switch marked MANUAL-OFF-AUTOMATIC.

c. Connections to the selector switch shall be such that; only the normal automatic regulatory control devices will be bypassed when the switch is in the Manual position; all safety control devices, such as low-or high-pressure cutouts, high-temperature cutouts, and motor-overload protective devices, shall be connected in the motor-control circuit in both the Manual and the Automatic positions of the selector switch. Control circuit connections to any MANUAL-OFF-AUTOMATIC switch or to more than one automatic regulatory control device shall be made in accordance with wiring diagram approved by the Contracting Officer unless such diagram is included on the drawings. All controls shall be 120 volts or less unless otherwise indicated.

2.18 PANELBOARDS

Dead-front construction, NEMA PB 1 and UL 67.

2.19 RECEPTACLES

2.19.1 Hospital Grade

UL 498.

2.19.2 Heavy Duty Grade

NEMA WD 1. Devices shall conform to all requirements for heavy duty receptacles.

2.19.3 Standard Grade

UL 498.

2.19.4 Ground Fault Interrupters

UL 943, Class A or B.

2.19.5 Hazardous (Classified) Locations

UL 1010.

2.19.6 NEMA Standard Receptacle Configurations

NEMA WD 6.

a. Single and Duplex, 15-Ampere and 20-Ampere, 125 Volt

15-ampere, non-locking: NEMA type 5-15R, locking: NEMA type L5-15R, 20-ampere, non-locking: NEMA type 5-20R, locking: NEMA type L5-20R.

b. 15-Ampere, 250 Volt

Two-pole, 3-wire grounding, non-locking: NEMA type 6-15R, locking: NEMA type L6-15R. Three-pole, 4-wire grounding, non-locking: NEMA type 15-15R, locking: NEMA type L15-15R.

c. 20-Ampere, 250 Volt

Two-pole, 3-wire grounding, non-locking: NEMA type 6-20R, locking: NEMA type L6-20R. Three-pole, 4-wire grounding, non-locking: NEMA type 15-20R, locking: NEMA type L15-20R.

d. 30-Ampere, 125/250 Volt

Three-pole, 3-wire, non-locking: NEMA type 10-30R, locking: NEMA type L10-30R. Three-pole, 4-wire grounding, non-locking: NEMA type 14-30R, locking: NEMA type L14-30R.

e. 30-Ampere, 250 Volt

Two-pole, 3-wire grounding, non-locking: NEMA type 6-30R, locking: NEMA type L6-30R. Three-pole, 4-wire grounding, non-locking: NEMA type 15-30R, locking: NEMA type L15-30R.

f. 50-Ampere, 125/250 Volt

Three-pole, 3-wire: NEMA type 10-50R. Three-pole, 4-wire grounding: NEMA type 14-50R.

g. 50-Ampere, 250 Volt

Two-pole, 3-wire grounding: NEMA type 6-50R. Three-pole, 4-wire

grounding: NEMA type 15-50R.

2.20 Service Entrance Equipment

UL 869A.

2.21 SPLICE, CONDUCTOR

UL 486C.

2.22 SWITCHBOARDS

Assemblies shall be metal-enclosed, freestanding general-purpose type ventilated type in accordance with NEMA PB 2, UL 891, and IEEE C37.20.1 and shall be installed to provide front and rear access. Busses shall be copper. Assembly shall be approximately 90 inches high; arrangement of circuit breakers and other items specified shall be as indicated. The withstand rating and interrupting capacity of the switchboards and circuit breakers shall be based on the maximum fault current available.

2.22.1 Circuit Breakers

Circuit breakers shall be molded-case circuit breakers.

2.22.2 Auxiliary Equipment

2.22.2.1 Instruments

Instruments shall be long scale, 6.8 inches minimum, semiflush rectangular, indicating or digital switchboard type, mounted at eye level.

a. Ammeter, range 0 to 2000 amperes, complete with selector switch having off position and positions to read each phase current.

b. Voltmeter, range 0 to 600 volts, complete with selector switch having off position and positions to read each phase to phase and phase to neutral voltage.

2.22.2.2 Control Switch

A control switch with indicating lights shall be provided for each electrically operated breaker.

2.22.2.3 Control Power Sources

Control power shall be 120-volt AC.

2.23 SNAP SWITCHES

UL 20.

2.24 TAPES

2.24.1 Plastic Tape

UL 510.

2.24.2 Rubber Tape

UL 510.

2.25 TRANSFORMERS

Single- and three-phase transformers shall have two windings per phase. Full-capacity standard NEMA taps shall be provided in the primary windings of transformers unless otherwise indicated. Three-phase transformers shall be configured with delta-wye windings, except as indicated. "T" connections may be used for transformers rated 15 kVA or below. Transformers supplying non-linear loads shall be UL listed as suitable for supplying such loads with a total K-factor not to exceed K-13 and have neutrals sized for 200 percent of rated current.

2.25.1 Transformers, Dry-Type

Transformers shall have 220 degrees C insulation system for transformers 15 kVA and greater, and shall have 180 degrees C insulation system for transformers rated 10 kVA and less, with temperature rise not exceeding 150 degrees C under full-rated load in maximum ambient temperature of 40 degrees C. Transformer of 150 degrees C temperature rise shall be capable of carrying continuously 100 percent of nameplate kVA without exceeding insulation rating.

a. 600 Volt or Less Primary:

NEMA ST 20, UL 506, general purpose, dry-type, self-cooled, ventilated epoxy-resin cast coil,. Transformers shall be provided in NEMA 1 enclosure. Transformers shall be quiet type with maximum sound level at least 3 decibels less than NEMA standard level for transformer ratings indicated.

2.25.2 Average Sound Level

The average sound level in decibels (dB) of transformers shall not exceed the following dB level at 12 inches for the applicable kVA rating range listed unless otherwise indicated:

kVA Range	dB Sound Level
1-50	50
51-150	55
151-300	58
301-500	60
501-700	62
701-1000	64
1001-1500	65
1501 & above	70

2.26 ISOLATED POWER SYSTEM EQUIPMENT

UL 1047, with monitor UL 1022.

2.27 WATTHOUR/DEMAND METERS, CHECK

ANSI C12.10 for self-contained watthour-demand meter with pulse-initiators for remote monitoring of watt-hour usage and instantaneous demand. Meter shall be Class 100as indicated.

2.28 INSTRUMENT TRANSFORMERS

2.28.1 General

Instrument transformers shall comply with ANSI C12.11 and IEEE C57.13. Instrument transformers shall be configured for mounting in/on the device to which they are applied. Polarity marks on instrument transformers shall be visually evident and shown on drawings.

2.28.2 Current Transformers

Unless otherwise indicated, bar, wound, or window-type transformers are acceptable; and except for window-type units installed over insulated buses, transformers shall have a BIL rating consistent with the rated BIL of the associated switchgear or electric power apparatus bushings, buses or conductors. Current transformers shall have the indicated ratios. The continuous thermal-current rating factor shall be not less than 1.2. Other thermal and mechanical ratings of current transformer and their primary leads shall be coordinated with the design of the circuit breaker and shall be not less than the momentary rating of the associated circuit breaker. Circuit protectors shall be provided across secondary leads of the current transformers to prevent the accidental open-circuiting of the transformers while energized. Each terminal of each current transformer shall be connected to a short-circuiting terminal block in the circuit interrupting mechanism cabinet, power transformer terminal cabinet, and in the associated instrument and relay cabinets.

2.28.2.1 Current Transformers for kWH and Demand Metering (Low Voltage)

Current transformers shall conform to IEEE C57.13. Provide current transformers with a metering accuracy Class of 0.3 through B-0.5, with a minimum RF of 1.5 at 30 degrees C, with 600-volt insulation, and 10 kV BIL. Provide butyl-molded, window-type current transformers mounted on the transformer low-voltage bushings. Route current transformer leads in a location as remote as possible from the power transformer secondary cables to permit current measurements to be taken with hook-on-ammeters.

2.28.2.2 Voltage Transformers

Voltage transformers shall have indicated ratios. Units shall have an accuracy class rating of .3. Voltage transformers shall be of the drawout type having current-limiting fuses in both primary and secondary circuits. Mechanical interlocks shall prevent removal of fuses, unless the associated voltage transformer is in a drawout position. Voltage transformer compartments shall have hinged doors.

2.29 WIRING DEVICES

NEMA WD 1 for wiring devices, and NEMA WD 6 for dimensional requirements of wiring devices.

2.30 COORDINATED POWER SYSTEM PROTECTION

Analyses shall be prepared to demonstrate that the equipment and system constructed meet the specified requirements for equipment ratings, coordination, and protection. They shall include a load flow analysis, a fault current analysis, and protective device coordination study. The studies shall be performed by a registered professional engineer with demonstrated experience in power system coordination in the last three years. The Contractor shall provide a list of references complete with

points of contact, addresses and telephone numbers. The selection of the engineer is subject to the approval of the Contracting Officer.

2.30.1 Scope of Analyses

The fault current analysis, and protective device coordination study shall begin at the source bus and extend down to system buses where fault availability is 10,000 amperes (symmetrical) for building/facility 600 volt level distribution buses.

2.30.2 Determination of Facts

The time-current characteristics, features, and nameplate data for each existing protective device shall be determined and documented. The Contractor shall coordinate with the Base Utility for fault current availability at the site.

2.30.3 Single Line Diagram

A single line diagram shall be prepared to show the electrical system buses, devices, transformation points, and all sources of fault current (including generator and motor contributions). A fault-impedance diagram or a computer analysis diagram may be provided. Each bus, device or transformation point shall have a unique identifier. If a fault-impedance diagram is provide, impedance data shall be shown. Locations of switches, breakers, and circuit interrupting devices shall be shown on the diagram together with available fault data, and the device interrupting rating.

2.30.4 Fault Current Analysis

2.30.4.1 Method

The fault current analysis shall be performed in accordance with methods described in IEEE Std 242, and IEEE Std 399.

2.30.4.2 Data

Actual data shall be utilized in fault calculations. Bus characteristics and transformer impedances shall be those proposed. Data shall be documented in the report.

2.30.4.3 Fault Current Availability

Balanced three-phase fault, bolted line-to-line fault, and line-to-ground fault current values shall be provided at each voltage transformation point and at each power distribution bus. The maximum and minimum values of fault available at each location shall be shown in tabular form on the diagram or in the report.

2.30.5 Coordination Study

The study shall demonstrate that the maximum possible degree of selectivity has been obtained between devices specified, consistent with protection of equipment and conductors from damage from overloads and fault conditions. The study shall include a description of the coordination of the protective devices in this project. Provide a written narrative that describes: which devices may operate in the event of a fault at each bus; the logic used to arrive at device ratings and settings; situation where system coordination is not achievable due to device limitations (an analysis of any device

curves which order overlap); coordination between upstream and downstream devices; and relay settings. Recommendations to improve or enhance system reliability, and detail where such changes would involve additions or modifications to the contract and cost changes (addition or reduction) shall be provided. Composite coordination plots shall be provided on log-log graph paper.

2.30.6 Study Report

a. The report shall include a narrative: the analyses performed; the bases and methods used; and the desired method of coordinated protection of the power system.

b. The study shall include descriptive and technical data for existing devices and new protective devices proposed. The data shall include manufacturers published data, nameplate data, and definition of the fixed or adjustable features of the existing or new protective devices.

c. The report shall document utility company data including system voltages, fault MVA, system X/R ratio, time-current characteristic curves, current transformer ratios, and relay device curves and protective device ratings and settings.

d. The report shall contain fully coordinated composite time-current characteristic curves for each bus in the system, as required to ensure coordinated power system protection between protective devices or equipment. The report shall include recommended ratings and settings of all protective devices in tabulated form.

e. The report shall provide the calculations performed for the analyses, including computer analysis programs utilized. The name of the software package, developer, and version number shall be provided.

PART 3 EXECUTION

3.1 GROUNDING

Grounding shall be in conformance with NFPA 70, the contract drawings, and the following specifications.

3.1.1 Ground Rods

The resistance to ground shall be measured using the fall-of-potential method described in IEEE Std 81. The maximum resistance of a driven ground shall not exceed 25 ohms under normally dry conditions. If this resistance cannot be obtained with a single rod, additional rods not less than 10 feet on centers. In high-ground-resistance, UL listed chemically charged ground rods may be used. If the resultant resistance exceeds 25 ohms measured not less than 48 hours after rainfall, the Contracting Officer shall be notified immediately. Connections below grade shall be fusion welded. Connections above grade shall be fusion welded or shall use UL 467 approved connectors.

3.1.2 Ground Bus

Ground bus shall be provided in the electrical equipment rooms as indicated. Noncurrent-carrying metal parts of transformer neutrals and

other electrical equipment shall be effectively grounded by bonding to the ground bus. The ground bus shall be bonded to both the entrance ground, and to a ground rod or rods as specified above having the upper ends terminating approximately 4 inches above the floor. Connections and splices shall be of the brazed, welded, bolted, or pressure-connector type, except that pressure connectors or bolted connections shall be used for connections to removable equipment. For raised floor equipment rooms in computer and data processing centers, a minimum of 4, one at each corner, multiple grounding systems shall be furnished. Connections shall be bolted type in lieu of thermoweld, so they can be changed as required by additions and/or alterations.

3.1.3 Grounding Conductors

A green equipment grounding conductor, sized in accordance with NFPA 70 shall be provided, regardless of the type of conduit. Equipment grounding bars shall be provided in all panelboards. The equipment grounding conductor shall be carried back to the service entrance grounding connection or separately derived grounding connection. All equipment grounding conductors, including metallic raceway systems used as such, shall be bonded or joined together in each wiring box or equipment enclosure. Metallic raceways and grounding conductors shall be checked to assure that they are wired or bonded into a common junction. Metallic boxes and enclosures, if used, shall also be bonded to these grounding conductors by an approved means per NFPA 70.

3.2 WIRING METHODS

Wiring shall conform to NFPA 70, the contract drawings, and the following specifications. Unless otherwise indicated, wiring shall consist of insulated conductors installed in rigid zinc-coated steel conduit, rigid plastic conduit, intermediate metal conduit conduit. Where cables and wires are installed in cable trays, they shall be of the type permitted by NFPA 70 for use in such applications. Wire fill in conduits shall be based on NFPA 70 for the type of conduit and wire insulations specified. Wire fill in conduits located in Class I or II hazardous areas shall be limited to 25 percent of the cross sectional area of the conduit.

3.2.1 Conduit and Tubing Systems

Conduit and tubing systems shall be installed as indicated. Conduit sizes shown are based on use of copper conductors with insulation types as described in paragraph WIRING METHODS. Minimum size of raceways shall be 1/2 inch. Only metal conduits will be permitted when conduits are required for shielding or other special purposes indicated, or when required by conformance to NFPA 70. Nonmetallic conduit and tubing may be used in damp, wet or corrosive locations when permitted by NFPA 70 and the conduit or tubing system is provided with appropriate boxes, covers, clamps, screws or other appropriate type of fittings. Electrical metallic tubing (EMT) may be installed only within buildings. EMT may be installed in concrete and grout in dry locations. EMT installed in concrete or grout shall be provided with concrete tight fittings. EMT shall not be installed in damp or wet locations, or the air space of exterior masonry cavity walls. Bushings, manufactured fittings or boxes providing equivalent means of protection shall be installed on the ends of all conduits and shall be of the insulating type, where required by NFPA 70. Only UL listed adapters shall be used to connect EMT to rigid metal conduit, cast boxes, and conduit bodies. Aluminum conduit may be used only where installed exposed in dry locations. Nonaluminum sleeves shall be used where aluminum conduit

passes through concrete floors and firewalls. Penetrations of above grade floor slabs, time-rated partitions and fire walls shall be firestopped in accordance with Section 07840 FIRESTOPPING. Except as otherwise specified, IMC may be used as an option for rigid steel conduit in areas as permitted by NFPA 70. Raceways shall not be installed under the firepits of boilers and furnaces and shall be kept 6 inches away from parallel runs of flues, steam pipes and hot-water pipes. Raceways shall be concealed within finished walls, ceilings, and floors unless otherwise shown. Raceways crossing structural expansion joints or seismic joints shall be provided with suitable expansion fittings or other suitable means to compensate for the building expansion and contraction and to provide for continuity of grounding. Wiring installed in underfloor duct system or underfloor raceway system shall be suitable for installation in wet locations.

3.2.1.1 Pull Wires

A pull wire shall be inserted in all empty raceway of plastic having not less than 200 pounds per square inch tensile strength. Not less than 10 inches of slack shall be left at each end of the pull wire.

3.2.1.2 Conduit Stub-Ups

Where conduits are to be stubbed up through concrete floors, a short elbow shall be installed below grade to transition from the horizontal run of conduit to a vertical run. A conduit coupling fitting, threaded on the inside shall be installed, to allow terminating the conduit flush with the finished floor. Wiring shall be extended in rigid threaded conduit to equipment, except that where required, flexible conduit may be used 6 inches above the floor. Empty or spare conduit stub-ups shall be plugged flush with the finished floor with a threaded, recessed plug.

3.2.1.3 Below Slab-on-Grade or in the Ground

Electrical wiring below slab-on-grade shall be protected by a conduit system. Conduit passing vertically through slabs-on-grade shall be rigid steel or IMC. Rigid steel or IMC conduits installed below slab-on-grade or in the earth shall be field wrapped with 0.010 inch thick pipe-wrapping plastic tape applied with a 50 percent overlay, or shall have a factory-applied polyvinyl chloride, plastic resin, or epoxy coating system.

3.2.1.4 Installing in Slabs Including Slabs on Grade

Conduit installed in slabs-on-grade shall be rigid steel or IMC. Conduits shall be installed as close to the middle of concrete slabs as practicable without disturbing the reinforcement. Outside diameter shall not exceed 1/3 of the slab thickness and conduits shall be spaced not closer than 3 diameters on centers except at cabinet locations where the slab thickness shall be increased as approved by the Contracting Officer. Where conduit is run parallel to reinforcing steel, the conduit shall be spaced a minimum of one conduit diameter away but not less than one inch from the reinforcing steel.

3.2.1.5 Changes in Direction of Runs

Changes in direction of runs shall be made with symmetrical bends or cast-metal fittings. Field-made bends and offsets shall be made with an approved hickey or conduit-bending machine. Crushed or deformed raceways shall not be installed. Trapped raceways in damp and wet locations shall be avoided where possible. Lodgment of plaster, dirt, or trash in raceways,

boxes, fittings and equipment shall be prevented during the course of construction. Clogged raceways shall be cleared of obstructions or shall be replaced.

3.2.1.6 Supports

Metallic conduits and tubing,and the support system to which they are attached, shall be securely and rigidly fastened in place to prevent vertical and horizontal movement at intervals of not more than 10 feet and within 3 feet of boxes, cabinets, and fittings, with approved pipe straps, wall brackets, conduit clamps, conduit hangers, threaded C-clamps, beam clamps, or ceiling trapeze. Loads and supports shall be coordinated with supporting structure to prevent damage or deformation to the structure. Loads shall not be applied to joist bridging. Attachment shall be by wood screws or screw-type nails to wood; by toggle bolts on hollow masonry units; by expansion bolts on concrete or brick; by machine screws, welded threaded studs, heat-treated or spring-steel-tension clamps on steel work. Nail-type nylon anchors or threaded studs driven in by a powder charge and provided with lock washers and nuts may be used in lieu of expansion bolts or machine screws. Raceways or pipe straps shall not be welded to steel structures. Cutting the main reinforcing bars in reinforced concrete beams or joists shall be avoided when drilling holes for support anchors. Holes drilled for support anchors, but not used, shall be filled. In partitions of light steel construction, sheet-metal screws may be used. Raceways shall not be supported using wire or nylon ties. Raceways shall be independently supported from the structure. Upper raceways shall not be used as a means of support for lower raceways. Supporting means shall not be shared between electrical raceways and mechanical piping or ducts. Cables and raceways shall not be supported by ceiling grids. Except where permitted by NFPA 70, wiring shall not be supported by ceiling support systems. Conduits shall be fastened to sheet-metal boxes and cabinets with two locknuts where required by NFPA 70, where insulating bushings are used, and where bushings cannot be brought into firm contact with the box; otherwise, a single locknut and bushing may be used. Threadless fittings for electrical metallic tubing shall be of a type approved for the conditions encountered. Additional support for horizontal runs is not required when EMT rests on steel stud cutouts.

3.2.1.7 Exposed Raceways

Exposed raceways shall be installed parallel or perpendicular to walls, structural members, or intersections of vertical planes and ceilings. Raceways under raised floors and above accessible ceilings shall be considered as exposed installations in accordance with NFPA 70 definitions.

3.2.1.8 Exposed Risers

Exposed risers in wire shafts of multistory buildings shall be supported by U-clamp hangers at each floor level, and at intervals not to exceed 10 feet.

3.2.1.9 Communications Raceways

Communications raceways indicated shall be installed in accordance with the previous requirements for conduit and tubing and with the additional requirement that no length of run shall exceed 50 feet for 1/2 inch and 3/4 inch sizes, and 100 feet for 1 inch or larger sizes, and shall not contain more than two 90-degree bends or the equivalent. Additional pull or junction boxes shall be installed to comply with these limitations whether

or not indicated. Inside radii of bends in conduits of 1 inch size or larger shall not be less than ten times the nominal diameter.

3.2.2 Cable Trays

Cable trays shall be supported in accordance with the recommendations of the manufacturer but at no more than 6 foot intervals. Contact surfaces of aluminum connections shall be coated with an antioxidant compound prior to assembly. Adjacent cable tray sections shall be bonded together by connector plates of an identical type as the cable tray sections. The Contractor shall submit the manufacturer's certification that the cable tray system meets all requirements of Article 318 of NFPA 70. The cable tray shall be installed and grounded in accordance with the provisions of Article 318 of NFPA 70. Data submitted by the Contractor shall demonstrate that the completed cable tray systems will comply with the specified requirements. Cable trays shall terminate 10 inches from both sides of smoke and fire partitions. Conductors run through smoke and fire partitions shall be installed in 4 inch rigid steel conduits with grounding bushings, extending 12 inches beyond each side of the partitions. The installation shall be sealed to preserve the smoke and fire rating of the partitions. Penetrations shall be firestopped in accordance with Section 07840 FIRESTOPPING.

3.2.3 Cables and Conductors

Installation shall conform to the requirements of NFPA 70. Covered, bare or insulated conductors of circuits rated over 600 volts shall not occupy the same equipment wiring enclosure, cable, or raceway with conductors of circuits rated 600 volts or less.

3.2.3.1 Sizing

Unless otherwise noted, all sizes are based on copper conductors and the insulation types indicated. Sizes shall be not less than indicated. Branch-circuit conductors shall be not smaller than No. 12 AWG. Conductors for branch circuits of 120 volts more than 100 feet long from panel to load center, shall be no smaller than No. 10 AWG. Class 1 remote control and signal circuit conductors shall be not less than No. 14 AWG. Class 2 remote control and signal circuit conductors shall be not less than No. 16 AWG. Class 3 low-energy, remote-control and signal circuits shall be not less than No. 22 AWG.

3.2.3.2 Use of Aluminum Conductors in Lieu of Copper

Aluminum conductors shall not be used.

3.2.3.3 Cable Systems

Cable systems shall be installed where indicated. Cables shall be installed concealed behind ceiling or wall finish where practicable. Cables shall be threaded through holes bored on the approximate centerline of wood members; notching of surfaces will not be permitted. Sleeves shall be provided through bond beams of masonry-block walls for threading cables through hollow spaces. Exposed cables shall be installed parallel or at right angles to walls or structural members. In rooms or areas not provided with ceiling or wall finish, cables and outlets shall be installed so that a room finish may be applied in the future without disturbing the cables or resetting the boxes. Exposed nonmetallic-sheathed cables less than 4 feet above floors shall be protected from mechanical injury by

installation in conduit or tubing.

3.2.3.4 Cable Splicing

Splices shall be made in an accessible location. Crimping tools and dies shall be approved by the connector manufacturer for use with the type of connector and conductor.

a. Copper Conductors, 600 Volt and Under: Splices in conductors No. 10 AWG and smaller diameter shall be made with an insulated, pressure-type connector. Splices in conductors No. 8 AWG and larger diameter shall be made with a solderless connector and insulated with tape or heat-shrink type insulating material equivalent to the conductor insulation.

b. Greater Than 600 Volt: Cable splices shall be made in accordance with the cable manufacturer's recommendations and Section 16375 ELECTRICAL DISTRIBUTION SYSTEM, UNDERGROUND.

3.2.3.5 Conductor Identification and Tagging

Power, control, and signal circuit conductor identification shall be provided within each enclosure where a tap, splice, or termination is made. Where several feeders pass through a common pull box, the feeders shall be tagged to indicate clearly the electrical characteristics, circuit number, and panel designation. Phase conductors of low voltage power circuits shall be identified by color coding. Phase identification by a particular color shall be maintained continuously for the length of a circuit, including junctions.

a. Color coding shall be provided for service, feeder, branch, and ground conductors. Color shall be green for grounding conductors and white for neutrals; except where neutrals of more than one system are installed in the same raceway or box, other neutral shall be white with colored (not green) stripe. The color coding for 3-phase and single-phase low voltage systems shall be as follows:

   120/208-volt, 3-phase: Black(A), red(B), and blue(C).
   120/240-volt, 1-phase: Black and red.

b. Conductor phase and voltage identification shall be made by color-coded insulation for all conductors smaller than No. 6 AWG. For conductors No. 6 AWG and larger, identification shall be made by color-coded insulation, or conductors with black insulation may be furnished and identified by the use of half-lapped bands of colored electrical tape wrapped around the insulation for a minimum of 3 inches of length near the end, or other method as submitted by the Contractor and approved by the Contracting Officer.

c. Control and signal circuit conductor identification shall be made by color-coded insulated conductors, plastic-coated self-sticking printed markers, permanently attached stamped metal foil markers, or equivalent means as approved. Control circuit terminals of equipment shall be properly identified. Terminal and conductor identification shall match that shown on approved detail drawings. Hand lettering or marking is not acceptable.

3.3 BOXES AND SUPPORTS

Boxes shall be provided in the wiring or raceway systems where required by NFPA 70 for pulling of wires, making connections, and mounting of devices or fixtures. Pull boxes shall be furnished with screw-fastened covers. Indicated elevations are approximate, except where minimum mounting heights for hazardous areas are required by NFPA 70. Unless otherwise indicated, boxes for wall switches shall be mounted 48 inches above finished floors. Switch and outlet boxes located on opposite sides of fire rated walls shall be separated by a minimum horizontal distance of 24 inches. The total combined area of all box openings in fire rated walls shall not exceed 100 square inches per 100 square feet. Maximum box areas for individual boxes in fire rated walls vary with the manufacturer and shall not exceed the maximum specified for that box in UL Elec Const Dir. Only boxes listed in UL Elec Const Dir shall be used in fire rated walls.

3.3.1 Box Applications

Each box shall have not less than the volume required by NFPA 70 for number of conductors enclosed in box. Boxes for metallic raceways shall be listed for the intended use when located in normally wet locations, when flush or surface mounted on outside of exterior surfaces, or when located in hazardous areas. Boxes installed in wet locations and boxes installed flush with the outside of exterior surfaces shall be gasketed. Boxes for mounting lighting fixtures shall be not less than 4 inches square, or octagonal, except smaller boxes may be installed as required by fixture configuration, as approved. Cast-metal boxes with 3/32 inch wall thickness are acceptable. Large size boxes shall be NEMA 1 or as shown. Boxes in other locations shall be sheet steel except that aluminum boxes may be used with aluminum conduit, and nonmetallic boxes may be used with nonmetallic conduit and tubing or nonmetallic sheathed cable system, when permitted by NFPA 70. Boxes for use in masonry-block or tile walls shall be square-cornered, tile-type, or standard boxes having square-cornered, tile-type covers.

3.3.2 Brackets and Fasteners

Boxes and supports shall be fastened to wood with wood screws or screw-type nails of equal holding strength, with bolts and metal expansion shields on concrete or brick, with toggle bolts on hollow masonry units, and with machine screw or welded studs on steel work. Threaded studs driven in by powder charge and provided with lockwashers and nuts, or nail-type nylon anchors may be used in lieu of expansion shields, or machine screws. Penetration of more than 1-1/2 inches into reinforced-concrete beams or more than 3/4 inch into reinforced-concrete joists shall avoid cutting any main reinforcing steel. The use of brackets which depend on gypsum wallboard or plasterboard for primary support will not be permitted. In partitions of light steel construction, bar hangers with 1 inch long studs, mounted between metal wall studs or metal box mounting brackets shall be used to secure boxes to the building structure. When metal box mounting brackets are used, additional box support shall be provided on the side of the box opposite the brackets. This additional box support shall consist of a minimum 12 inch long section of wall stud, bracketed to the opposite side of the box and secured by two screws through the wallboard on each side of the stud. Metal screws may be used in lieu of the metal box mounting brackets.

3.3.3 Mounting in Walls, Ceilings, or Recessed Locations

In walls or ceilings of concrete, tile, or other non-combustible material, boxes shall be installed so that the edge of the box is not recessed more than 1/4 inch from the finished surface. Boxes mounted in combustible walls or ceiling material shall be mounted flush with the finished surface. The use of gypsum or plasterboard as a means of supporting boxes will not be permitted. Boxes installed for concealed wiring shall be provided with suitable extension rings or plaster covers, as required. The bottom of boxes installed in masonry-block walls for concealed wiring shall be mounted flush with the top of a block to minimize cutting of the blocks, and boxes shall be located horizontally to avoid cutting webs of block. Separate boxes shall be provided for flush or recessed fixtures when required by the fixture terminal operating temperature, and fixtures shall be readily removable for access to the boxes unless ceiling access panels are provided.

3.3.4 Installation in Overhead Spaces

In open overhead spaces, cast-metal boxes threaded to raceways need not be separately supported except where used for fixture support; cast-metal boxes having threadless connectors and sheet metal boxes shall be supported directly from the building structure or by bar hangers. Hangers shall not be fastened to or supported from joist bridging. Where bar hangers are used, the bar shall be attached to raceways on opposite sides of the box and the raceway shall be supported with an approved type fastener not more than 24 inches from the box.

3.4 DEVICE PLATES

One-piece type device plates shall be provided for all outlets and fittings. Plates on unfinished walls and on fittings shall be of zinc-coated sheet steel, cast-metal, or impact resistant plastic having rounded or beveled edges. Plates on finished walls shall be of steel with baked enamel finish or impact-resistant plastic and shall be ivory Screws shall be of metal with countersunk heads, in a color to match the finish of the plate. Plates shall be installed with all four edges in continuous contact with finished wall surfaces without the use of mats or similar devices. Plaster fillings will not be permitted. Plates shall be installed with an alignment tolerance of 1/16 inch. The use of sectional-type device plates will not be permitted. Plates installed in wet locations shall be gasketed and provided with a hinged, gasketed cover, unless otherwise specified.

3.5 RECEPTACLES

3.5.1 Single and Duplex, 15 or 20-ampere, 125 volt

Single and duplex receptacles shall be rated 20 amperes, 125 volts, two-pole, three-wire, grounding type with polarized parallel slots. Bodies shall be of ivory to match color of switch handles in the same room or to harmonize with the color of the respective wall, and supported by mounting strap having plaster ears. Contact arrangement shall be such that contact is made on two sides of an inserted blade. Receptacle shall be side- or back-wired with two screws per terminal. The third grounding pole shall be connected to the metal mounting yoke. Switched receptacles shall be the same as other receptacles specified except that the ungrounded pole of each suitable receptacle shall be provided with a separate terminal. Only the top receptacle of a duplex receptacle shall be wired for switching application. Receptacles with ground fault circuit interrupters shall have the current rating as indicated, and shall be UL Class A type unless

otherwise shown. Ground fault circuit protection shall be provided as required by NFPA 70 and as indicated on the drawings.

3.5.2 Clock Outlet

Clock outlet, for use in other than a wired clock system, shall consist of an outlet box, a plaster cover where required, and a single receptacle with clock-outlet plate. The receptacle shall be recessed sufficiently within the box to allow the complete insertion of a standard cap, flush with the plate. A suitable clip or support for hanging the clock shall be secured to the top of the plate. Material and finish of the plate shall be as specified in paragraph DEVICE PLATES.

3.5.3 Floor Outlets

Floor outlets shall be adjustable and each outlet shall consist of a cast-metal body with threaded openings for conduits, adjustable ring, and cover plate with 1/2 inch or 3/4 inch threaded flush plug. Each telephone outlet shall consist of a horizontal cast housing with a receptacle as specified. Gaskets shall be used where necessary to ensure a watertight installation. Plugs with installation instructions shall be delivered to the Contracting Officer at the job site for capping outlets upon removal of service fittings.

3.5.4 Weatherproof Applications

Weatherproof receptacles shall be suitable for the environment, damp or wet as applicable, and the housings shall be labeled to identify the allowable use. Receptacles shall be marked in accordance with UL 514A for the type of use indicated; "Damp locations", "Wet Locations", "Wet Location Only When Cover Closed". Assemblies shall be installed in accordance with the manufacturer's recommendations.

3.5.4.1 Damp Locations

Receptacles in damp locations shall be mounted in an outlet box with a gasketed, weatherproof, cast-metal cover plate (device plate, box cover) and a gasketed cap (hood, receptacle cover) over each receptacle opening. The cap shall be either a screw-on type permanently attached to the cover plate by a short length of bead chain or shall be a flap type attached to the cover with a spring loaded hinge.

3.5.4.2 Wet Locations

Receptacles in wet locations shall be installed in an assembly rated for such use whether the plug is inserted or withdrawn, unless otherwise indicated. In a duplex installation, the receptacle cover shall be configured to shield the connections whether one or both receptacles are in use. Assemblies which utilize a self-sealing boot or gasket to maintain wet location rating shall be furnished with a compatible plug at each receptacle location and a sign notifying the user that only plugs intended for use with the sealing boot shall be connected during wet conditions.

3.5.5 Receptacles, 15-Ampere, 250-Volt

Receptacles, 15-ampere, 250-volt, shall be single two-pole, three-wire, grounding type with bodies of ivory phenolic compound supported by mounting yoke having plaster ears. The third grounding pole shall be connected to the metal yoke. Each receptacle shall be provided with a mating cord-grip

plug.

3.5.6 Receptacles, 20-Ampere, 250-Volt

Receptacles, single, 20-ampere, 250-volt, shall be ivory molded plastic, two-pole, three-wire or three-pole, four-wire, grounding type complete with appropriate mating cord-grip plug.

3.5.7 Receptacles, 30-Ampere, 125/250-Volt

Receptacles, single, 30-ampere, 125/250-volt, shall be molded-plastic, three-pole, four-wire, grounding type, complete with appropriate mating cord-grip type attachment plug. Each dryer receptacle shall be furnished with a non-detachable power supply cord for connection to the electric clothes dryer. The cord shall be an angle-type 36 inch length of Type SRD, SRDE or SRDT range and dryer cable with three No. 10 AWG conductors.

3.5.8 Receptacles, 30-Ampere, 250-Volt

Receptacles, single, 30-ampere, 250-volt, shall be molded-plastic, three-pole, three-wire type, complete with appropriate mating cord-grip plug.

3.5.9 Receptacles, 50-Ampere, 125/250-Volt

Receptacles, single 50-ampere, 125/250-volt, shall be flush, molded plastic, three-pole, four-wire, grounding type. Each range receptacle shall be furnished with a nondetachable power supply cord for connection to the electric range. The cord shall be an angle-type 36 inch length of SRD, SRDE, or SRDT range and dryer cable with one No. 8 and two No. 6 AWG conductors.

3.5.10 Receptacles, 50-Ampere, 250-Volt

Receptacles, single, 50-ampere, 250-volt, shall be flush molded plastic, three-pole, three-wire type, complete with appropriate mating cord-grip plug.

3.5.11 Special-Purpose or Heavy-Duty Receptacles

Special-purpose or heavy-duty receptacles shall be of the type and of ratings and number of poles indicated or required for the anticipated purpose. Contact surfaces may be either round or rectangular. One appropriate straight or angle-type plug shall be furnished with each receptacle. Locking type receptacles, rated 30 amperes or less, shall be locked by rotating the plug. Locking type receptacles, rated more than 50 amperes, shall utilize a locking ring.

3.6 WALL SWITCHES

Wall switches shall be of the totally enclosed tumbler type. The wall switch handle and switch plate color shall be ivory. Wiring terminals shall be of the screw type or of the solderless pressure type having suitable conductor-release arrangement. Not more than two switches shall be installed in a single-gang position. Switches shall be rated 20-ampere 120-volt for use on alternating current only. Pilot lights indicated shall consist of yoke-mounted candelabra-base sockets rated at 75 watts, 125 volts, and fitted with glass or plastic jewels. A clear 6-watt lamp shall be furnished and installed in each pilot switch. Jewels for use with

switches controlling motors shall be green, and jewels for other purposes shall be red. Dimming switches shall be solid-state flush mounted, sized for the loads.

3.7 SERVICE EQUIPMENT

Service-disconnecting means shall be of the type indicated with an external handle for manual operation. When service disconnecting means is a part of an assembly, the assembly shall be listed as suitable for service entrance equipment. Enclosures shall be sheet metal with hinged cover for surface mounting unless otherwise indicated.

3.8 PANELBOARDS AND LOADCENTERS

Circuit breakers and switches used as a motor disconnecting means shall be capable of being locked in the open position. Door locks shall be keyed alike. Nameplates shall be as approved. Directories shall be typed to indicate loads served by each circuit and mounted in a holder behind a clear protective covering. Busses shall be copper.

3.8.1 Loadcenters

Loadcenters shall be circuit breaker equipped.

3.8.2 Panelboards

Panelboards shall be circuit breaker equipped as indicated on the drawings.

3.9 FUSES

Equipment provided under this contract shall be provided with a complete set of properly rated fuses when the equipment manufacturer utilize fuses in the manufacture of the equipment, or if current-limiting fuses are required to be installed to limit the ampere-interrupting capacity of circuit breakers or equipment to less than the maximum available fault current at the location of the equipment to be installed. Fuses shall have a voltage rating of not less than the phase-to-phase circuit voltage, and shall have the time-current characteristics required for effective power system coordination. Time-delay and non-time-delay options shall be as shown.

3.9.1 Cartridge Fuses; Noncurrent-Limiting Type

Cartridge fuses of the noncurrent-limiting type shall be Class H, nonrenewable, dual element, time lag type and shall have interrupting capacity of 10,000 amperes. At 500 percent current, cartridge fuses shall not blow in less than 10 seconds.

3.9.2 Cartridge Fuses; Current-Limiting Type

Cartridge fuses, current-limiting type, Class RK1 or RK5 shall have tested interrupting capacity not less than 200,000 amperes. Fuse holders shall be the type that will reject all Class H fuses.

3.9.3 Continuous Current Ratings (600 Amperes and Smaller)

Service entrance and feeder circuit fuses (600 amperes and smaller) shall be Class RK1, current-limiting, time-delay with 200,000 amperes interrupting capacity.

3.9.4 Continuous Current Ratings (Greater than 600 Amperes)

Service entrance and feeder circuit fuses (greater than 600 amperes) shall be Class L, current-limiting, time-delay with 200,000 amperes interrupting capacity.

3.9.5 Motor and Transformer Circuit Fuses

Motor, motor controller, transformer, and inductive circuit fuses shall be Class RK1 or RK5, current-limiting, time-delay with 200,000 amperes interrupting capacity.

3.10 UNDERGROUND SERVICE

Unless otherwise indicated, interior conduit systems shall be stubbed out 5 feet beyond the building wall and 2 feet below finished grade, for interface with the exterior service lateral conduits and exterior communications conduits. Outside conduit ends shall be bushed when used for direct burial service lateral conductors. Outside conduit ends shall be capped or plugged until connected to exterior conduit systems. Underground service lateral conductors will be extended to building service entrance and terminated in accordance with the requirements of Section 16375 ELECTRICAL DISTRIBUTION SYSTEM, UNDERGROUND and NFPA 70.

3.11 MOTORS

Each motor shall conform to the hp and voltage ratings indicated, and shall have a service factor and other characteristics that are essential to the proper application and performance of the motors under conditions shown or specified. Three-phase motors for use on 3-phase 208-volt systems shall have a nameplate rating of 200 volts. Unless otherwise specified, all motors shall have open frames, and continuous-duty classification based on a 40 degree C ambient temperature reference. Polyphase motors shall be squirrel-cage type, having normal-starting-torque and low-starting-current characteristics, unless other characteristics are specified in other sections of these specifications or shown on contract drawings. The Contractor shall be responsible for selecting the actual horsepower ratings and other motor requirements necessary for the applications indicated. When electrically driven equipment furnished under other sections of these specifications materially differs from the design, the Contractor shall make the necessary adjustments to the wiring, disconnect devices and branch-circuit protection to accommodate the equipment actually installed.

3.12 MOTOR CONTROL

Each motor or group of motors requiring a single control shall be provided under other sections of these specifications with a suitable controller and devices that will perform the functions as specified for the respective motors. Each motor of 1/8 hp or larger shall be provided with thermal-overload protection. Polyphase motors shall have overload protection in each ungrounded conductor. The overload-protection device shall be provided either integral with the motor or controller, or shall be mounted in a separate enclosure. Unless otherwise specified, the protective device shall be of the manually reset type. Single or double pole tumbler switches specifically designed for alternating-current operation only may be used as manual controllers for single-phase motors having a current rating not in excess of 80 percent of the switch rating. Automatic control devices such as thermostats, float or pressure switches

may control the starting and stopping of motors directly, provided the devices used are designed for that purpose and have an adequate horsepower rating. When the automatic-control device does not have such a rating, a magnetic starter shall be used, with the automatic-control device actuating the pilot-control circuit. When combination manual and automatic control is specified and the automatic-control device operates the motor directly, a double-throw, three-position tumbler or rotary switch shall be provided for the manual control; when the automatic-control device actuates the pilot control circuit of a magnetic starter, the latter shall be provided with a three-position selector switch marked MANUAL-OFF-AUTOMATIC. Connections to the selector switch shall be such that only the normal automatic regulatory control devices will be bypassed when the switch is in the Manual position; all safety control devices, such as low- or high-pressure cutouts, high-temperature cutouts, and motor-overload protective devices, shall be connected in the motor-control circuit in both the Manual and the Automatic positions of the selector switch. Control circuit connections to any MANUAL-OFF-AUTOMATIC switch or to more than one automatic regulatory control device shall be made in accordance with wiring diagram approved by the Contracting Officer unless such diagram is included on the drawings. All controls shall be 120 volts or less unless otherwise indicated.

3.12.1 Reduced-Voltage Controllers

Reduced-voltage controllers shall be provided for polyphase motors 30 hp or larger. Reduced-voltage starters shall be of the single-step autotransformer, reactor, or resistor type having an adjustable time interval between application of reduced and full voltages to the motors. Wye-delta reduced voltage starters or part winding increment starters having an adjustable time delay between application of voltage to first and second winding of motor may be used in lieu of the reduced voltage starters specified above for starting of motor-generator sets, centrifugally operated equipment or reciprocating compressors provided with automatic unloaders.

3.12.2 Contacts

Unless otherwise indicated, contacts in miscellaneous control devices such as float switches, pressure switches, and auxiliary relays shall have current and voltage ratings in accordance with NEMA ICS 2 for rating designation B300.

3.12.3 Safety Controls

Safety controls for boilers shall be connected to a 2-wire, 120 volt grounded circuit supplied from the associated boiler-equipment circuit. Where the boiler circuit is more than 120 volts to ground, safety controls shall be energized through a two-winding transformer having its 120 volt secondary winding grounded. Overcurrent protection shall be provided in the ungrounded secondary conductor and shall be sized for the load encountered.

3.13 MOTOR-DISCONNECT MEANS

Each motor shall be provided with a disconnecting means when required by NFPA 70 even though not indicated. For single-phase motors, a single or double pole toggle switch, rated only for alternating current, will be acceptable for capacities less than 30 amperes, provided the ampere rating of the switch is at least 125 percent of the motor rating. Switches shall

disconnect all ungrounded conductors.

3.14 TRANSFORMER INSTALLATION

Three-phase transformers shall be connected only in a delta-wye or wye-delta configuration as indicated . "T" connections may be used for transformers rated at 15 kVA or below. Dry-type transformers shown located within 5 feet of the exterior wall shall be provided in a weatherproof enclosure. Transformers to be located within the building may be provided in the manufacturer's standard, ventilated indoor enclosure designed for use in 40 degrees C ambient temperature, unless otherwise indicated.

3.15 LIGHTING FIXTURES, LAMPS AND BALLASTS

This paragraph shall cover the installation of lamps, lighting fixtures and ballasts in interior or building mounted applications.

3.15.1 Lamps

Lamps of the type, wattage, and voltage rating indicated shall be delivered to the project in the original cartons and installed just prior to project completion. Lamps installed and used for working light during construction shall be replaced prior to turnover to the Government if more than 15% of their rated life has been used. Lamps shall be tested for proper operation prior to turn-over and shall be replaced if necessary with new lamps from the original manufacturer. 10% spare lamps of each type, from the original manufacturer, shall be provided.

3.15.2 Lighting Fixtures

Fixtures shall be as shown and shall conform to the following specifications and shall be as detailed on the drawings. Illustrations shown on the drawings are indicative of the general type desired and are not intended to restrict selection to fixtures of any particular manufacturer. Fixtures of similar designs and equivalent energy efficiency, light distribution and brightness characteristics, and of equal finish and quality will be acceptable if approved. In suspended acoustical ceilings with fluorescent fixtures, the fluorescent emergency light fixtures shall be furnished with self-contained battery packs.

3.15.2.1 Accessories

Accessories such as straps, mounting plates, nipples, or brackets shall be provided for proper installation.

3.15.2.2 Ceiling Fixtures

Ceiling fixtures shall be coordinated with and suitable for installation in, on or from the ceiling as shown. Installation and support of fixtures shall be in accordance with NFPA 70 and manufacturer's recommendations. Where seismic requirements are specified herein, fixtures shall be supported as shown or specified. Recessed fixtures shall have adjustable fittings to permit alignment with ceiling panels. Recessed fixtures installed in fire-resistive ceiling construction shall have the same fire rating as the ceiling or shall be provided with fireproofing boxes having materials of the same fire rating as the ceiling, in conformance withUL Elec Const Dir. Surface-mounted fixtures shall be suitable for fastening to the ceiling panel structural supports.

3.15.2.3 Fixtures for Installation in Grid Type Ceilings

Fixtures for installation in grid type ceilings which are smaller than a full tile shall be centered in the tile. 1 by 4 foot fixtures shall be mounted along the grid rail as shown. Work above the ceiling shall be coordinated among the trades to provide the lighting layout shown. Fixtures mounted to the grid shall have trim exactly compatible with the grid. Contractor shall coordinate trims with ceiling trades prior to ordering fixtures. Metric fixtures shall be designed to fit the metric grid specified. Fixtures in continuous rows shall be coordinated between trades prior to ordering. Fixtures shall be mounted using independent supports capable of supporting the entire weight of the fixture. No fixture shall rest solely on the ceiling grid. Recessed fixtures installed in seismic areas should be installed utilizing specially designed seismic clips. Junction boxes shall be supported at four points.

3.15.2.4 Suspended Fixtures

Suspended fixtures shall be provided with swivel hangers or hand-straights so that they hang plumb. Pendants, rods, or chains 4 feet or longer excluding fixture shall be braced to prevent swaying using three cables at 120 degrees of separation. Suspended fixtures in continuous rows shall have internal wireway systems for end to end wiring and shall be properly aligned to provide a straight and continuous row without bends, gaps, light leaks or filler pieces. Aligning splines shall be used on extruded aluminum fixtures to assure hairline joints. Steel fixtures shall be supported to prevent "oil-canning" effects. Fixture finishes shall be free of scratches, nicks, dents, and warps, and shall match the color and gloss specified. Pendants shall be finished to match fixtures. Aircraft cable shall be stainless steel. Canopies shall be finished to match the ceiling and shall be low profile unless otherwise shown. Maximum distance between suspension points shall be 10 feet or as recommended by the manufacturer, whichever is less.

Suspended fixtures installed in seismic areas shall have 45% swivel hangers and shall be located with no obstructions within the 45% range in all directions. The stem, canopy and fixture shall be capable of 45% swing.

3.15.3 Ballasts

Remote type ballasts or transformers, where indicated, shall be mounted in a well ventilated, easily accessible location, within the maximum operating distance from the lamp as designated by the manufacturer.

3.15.4 Emergency Light Sets

Emergency light sets shall conform to UL 924 with the number of heads as indicated. Sets shall be permanently connected to the wiring system by conductors installed in short lengths of flexible conduit.

3.16 BATTERY CHARGERS

Battery chargers shall be installed in conformance with NFPA 70.

3.17 EQUIPMENT CONNECTIONS

Wiring not furnished and installed under other sections of the specifications for the connection of electrical equipment as indicated on the drawings shall be furnished and installed under this section of the

specifications per manufacturer's installation procedures. Connections shall comply with the applicable requirements of paragraph WIRING METHODS. Flexible conduits 6 feet or less in length shall be provided to all electrical equipment subject to periodic removal, vibration, or movement and for all motors. All motors shall be provided with separate grounding conductors. Liquid-tight conduits shall be used in damp or wet locations.

3.17.1 Motors and Motor Control

Motors, motor controls, and motor control centers shall be installed in accordance with NFPA 70, the manufacturer's recommendations, and as indicated. Wiring shall be extended to motors, motor controls, and motor control centers and terminated.

3.17.2 Installation of Government-Furnished Equipment

Wiring shall be extended to the equipment and terminated.

3.17.3 Food Service Equipment Provided Under Other Sections

Wiring shall be extended to the equipment and terminated.

3.18 CIRCUIT PROTECTIVE DEVICES

The Contractor shall calibrate, adjust, set and test each new adjustable circuit protective device to ensure that they will function properly prior to the initial energization of the new power system under actual operating conditions.

3.19 PAINTING AND FINISHING

Field-applied paint on exposed surfaces shall be provided under Section 09900 PAINTS AND COATINGS.

3.20 REPAIR OF EXISTING WORK

The work shall be carefully laid out in advance, and where cutting, channeling, chasing, or drilling of floors, walls, partitions, ceiling, or other surfaces is necessary for the proper installation, support, or anchorage of the conduit, raceways, or other electrical work, this work shall be carefully done, and any damage to building, piping, or equipment shall be repaired by skilled mechanics of the trades involved at no additional cost to the Government.

3.21 FIELD TESTING

Field testing shall be performed in the presence of the Contracting Officer in accordance with the field test plan. The Contractor shall notify the Contracting Officer 7 days prior to conducting tests. The Contractor shall furnish all materials, labor, and equipment necessary to conduct field tests. The Contractor shall perform all tests and inspection recommended by the manufacturer unless specifically waived by the Contracting Officer. The Contractor shall maintain a written record of all tests which includes date, test performed, personnel involved, devices tested, serial number and name of test equipment, and test results. All field test reports will be signed and dated by the Contractor.

3.21.1 Safety

The Contractor shall provide and use safety devices such as rubber gloves, protective barriers, and danger signs to protect and warn personnel in the test vicinity. The Contractor shall replace any devices or equipment which are damaged due to improper test procedures or handling.

3.21.2 Ground-Resistance Tests

The resistance of each grounding electrode system shall be measured using the fall-of-potential method defined in IEEE Std 81. Soil resistivity in the area of the grid shall be measured concurrently with the grid measurements. Ground resistance measurements shall be made before the electrical distribution system is energized and shall be made in normally dry conditions not less than 48 hours after the last rainfall. Resistance measurements of separate grounding electrode systems shall be made before the systems are bonded together below grade. The combined resistance of separate systems may be used to meet the required resistance, but the specified number of electrodes must still be provided.

a. Single rod electrode - 25 ohms.

3.21.3 Ground-Grid Connection Inspection

All below-grade ground-grid connections will be visually inspected by the Contracting Officer before backfilling. The Contractor shall notify the Contracting Officer 24 hours before the site is ready for inspection.

3.21.4 Cable Tests

The Contractor shall be responsible for identifying all equipment and devices that could be damaged by application of the test voltage and ensuring that they have been properly disconnected prior to performing insulation resistance testing. An insulation resistance test shall be performed on all low and medium voltage cables after the cables are installed in their final configuration and prior to energization. The test voltage shall be 500 volts DC applied for one minute between each conductor and ground and between all possible combinations of conductors. The minimum value of resistance shall be:

R in megohms = (rated voltage in kV + 1) x 1000/(length of cable in feet)

Each cable failing this test shall be repaired or replaced. The repaired cable system shall then be retested until failures have been eliminated.

3.21.4.1 Medium Voltage Cable Tests

a. Continuity test.

b. Insulation resistance test.

c. DC high-potential test.

3.21.4.2 Low Voltage Cable Tests

a. Continuity test.

b. Insulation resistance test.

3.21.5 Metal Enclosed Bus Duct Tests

a. Insulation Resistance phase-to-phase, all combinations.

b. Insulation resistance phase-to-ground, each phase.

c. AC or DC high-potential test.

d. Phase rotation test.

3.21.6 Motor Tests

a. Phase rotation test to ensure proper directions.

b. Operation and sequence of reduced voltage starters.

c. High potential test on each winding to ground.

d. Insulation resistance of each winding to ground.

e. Vibration test.

f. Dielectric absorption test on motor and starter.

3.21.7 Dry-Type Transformer Tests

The following field tests shall be performed on all dry-type transformers.

a. Insulation resistance test phase-to-ground, each phase.

b. Turns ratio test.

3.21.8 Circuit Breaker Tests

The following field tests shall be performed on circuit breakers.

3.21.8.1 Circuit Breaker Tests, Medium Voltage

a. Insulation resistance test phase-to-phase, all combinations.

b. Insulation resistance tests phase-to-ground, each phase.

c. Closed breaker contact resistance test.

d. Power factor test.

e. High-potential test.

f. Manual and electrical operation of the breaker.

3.21.8.2 Circuit Breakers, Low Voltage

a. Insulation resistance test phase-to-phase, all combinations.

b. Insulation resistance test phase-to-ground, each phase.

c. Closed breaker contact resistance test.

d. Manual and electrical operation of the breaker.

3.21.8.3 Circuit Breakers, Molded Case

a. Insulation resistance test phase-to-phase, all combinations.

b. Insulation resistance test phase-to-ground, each phase.

c. Closed breaker contact resistance test.

d. Manual operation of the breaker.

3.21.9 Motor Control Centers

a. Insulation resistance test phase-to-phase, all combinations.

b. Insulation resistance test phase-to-ground, each phase.

c. Manual and electrical operational tests.

3.21.10 Protective Relays

Protective relays shall be visually and mechanically inspected, adjusted, tested, and calibrated in accordance with the manufacturer's published instructions. These tests shall include pick-up, timing, contact action, restraint, and other aspects necessary to insure proper calibration and operation. Relay settings shall be implemented in accordance with the coordination study. Relay contacts shall be manually or electrically operated to verify that the proper breakers and alarms initiate. Relaying current transformers shall be field tested in accordance with IEEE C57.13.

3.22 OPERATING TESTS

After the installation is completed, and at such time as the Contracting Officer may direct, the Contractor shall conduct operating tests for approval. The equipment shall be demonstrated to operate in accordance with the specified requirements. An operating test report shall be submitted in accordance with paragraph FIELD TEST REPORTS.

3.23 FIELD SERVICE

3.23.1 Onsite Training

The Contractor shall conduct a training course for the operating staff as designated by the Contracting Officer. The training period shall consist of a total of 8 hours of normal working time and shall start after the system is functionally completed but prior to final acceptance tests. The course instruction shall cover pertinent points involved in operating, starting, stopping, servicing the equipment, as well as all major elements of the operation and maintenance manuals. Additionally, the course instructions shall demonstrate all routine maintenance operations. A VHS format video tape of the entire training shall be submitted.

3.23.2 Installation Engineer

After delivery of the equipment, the Contractor shall furnish one or more field engineers, regularly employed by the equipment manufacturer to supervise the installation of equipment, assist in the performance of the onsite tests, oversee initial operations, and instruct personnel as to the operational and maintenance features of the equipment.

3.24 ACCEPTANCE

Final acceptance of the facility will not be given until the Contractor has successfully completed all tests and after all defects in installation, material or operation have been corrected.

-- End of Section --

SECTION 16710

PREMISES DISTRIBUTION SYSTEM
04/01

PART 1 GENERAL

1.1 REFERENCES

The publications listed below form a part of this specification to the extent referenced. The publications are referred to in the text by basic designation only.

ELECTRONIC INDUSTRIES ALLIANCE (EIA)

ANSI/TIA/EIA-568-A	(1995) Commercial Building Telecommunications Cabling Standard
ANSI/TIA/EIA-568-A-5	(2000) Transmission Performance Specifications for 4-pair 100 ohm Category 5E Cabling
ANSI/TIA/EIA-569-A	(1998) Commercial Building Standard for Telecommunications Pathways and Spaces
ANSI/TIA/EIA-606	(1993) Administration Standard for the Telecommunications Infrastructure of Commercial Buildings
ANSI/TIA/EIA-607	(1994) Commercial Building Grounding and Bonding Requirements for Telecommunications
TIA/EIA TSB 67	(1995) Transmission Performance Specifications for Field Testing of Unshielded Twisted-Pair Cabling Systems

INSULATED CABLE ENGINEERS ASSOCIATION (ICEA)

ICEA S-80-576	(1994) Communications Wire and Cable for Wiring of Premises
ICEA S-83-596	(1994) Fiber Optic Premises Distribution Cable

NATIONAL FIRE PROTECTION ASSOCIATION (NFPA)

NFPA 70	(1999) National Electrical Code

UNDERWRITERS LABORATORIES (UL)

UL 50	(1995; Rev thru Nov 1999) Enclosures for Electrical Equipment

1.2 SYSTEM DESCRIPTION

The premises distribution system shall consist of inside-plant horizontal, riser, and backbone cables and connecting hardware to transport telephone

and data (including LAN) signals between equipment items in a building. This shall be a complete system, to include full telecommunication room (TR) wire pathway support from entry into TR and wire management system on equipment racks. This will also include complete grounding/bonding backbone system. Entire premises distribution system will be in accordance with above listed commercial specifications.

1.3 ENVIRONMENTAL REQUIREMENTS

Connecting hardware shall be rated for operation under ambient conditions of 32 to 140 degrees F and in the range of 0 to 95 percent relative humidity, noncondensing.

1.4 QUALIFICATIONS

1.4.1 Minimum Contractor Qualifications

All work under this section shall be performed by and all equipment shall be furnished and installed by a certified Telecommunications Contractor, hereafter referred to as the Contractor. The Contractor shall have the following qualifications in Telecommunications Systems installation:

a. Contractor shall have a minimum of 3 years experience in the application, installation and testing of the specified systems and equipment.

b. All supervisors and installers assigned to the installation of this system or any of its components shall have factory certification from each equipment manufacturer that they are qualified to install and test the provided products.

c. All installers assigned to the installation of this system or any of its components shall have a minimum of 3 years experience in the installation of the specified copper and fiber optic cable and components.

1.4.2 Minimum Manufacturer Qualifications

The equipment and hardware provided under this contract will be from manufacturers that have a minimum of 3 years experience in producing the types of systems and equipment specified.

1.5 SUBMITTALS

Government approval is required for submittals with a "G" designation; submittals not having a "G" designation are for information only. When used, a designation following the "G" designation identifies the office that will review the submittal for the Government. The following shall be submitted in accordance with Section 01330 SUBMITTAL PROCEDURES:

SD-02 Shop Drawings

Premises Distribution System; G.

Detail drawings including a complete list of equipment and material. Detail drawings shall contain complete wiring and schematic diagrams and other details required to demonstrate that the system has been coordinated and will function properly as a system. Drawings shall include vertical riser diagrams, equipment

rack details, elevation drawings of telecommunications closet walls, outlet face plate details for all outlet configurations, sizes and types of all cables, conduits, and cable trays. Drawings shall show proposed layout and anchorage of equipment and appurtenances, and equipment relationship to other parts of the work including clearance for maintenance and operation.

Record Drawings; G.

Record drawings for the installed wiring system infrastructure per ANSI/TIA/EIA-606. The drawings shall show the location of all cable terminations and location and routing of all backbone and horizontal cables. The identifier for each termination and cable shall appear on the drawings.

SD-03 Product Data

Record Keeping and Documentation; G

Documentation on cables and termination hardware in accordance with ANSI/TIA/EIA-606.

Spare Parts;

Lists of spare parts, tools, and test equipment for each different item of material and equipment specified, after approval of detail drawings, not later than 2 months prior to the date of beneficial occupancy. The data shall include a complete list of parts and supplies, with current unit prices and source of supply, and a list of spare parts recommended for stocking.

Manufacturer's Recommendations;

Where installation procedures, or any part thereof, are required to be in accordance with the recommendations of the manufacturer of the material being installed, printed copies of these recommendations, prior to installation shall be provided. Installation of the item will not be allowed to proceed until the recommendations are received and approved.

Test Plan; G

Test plan defining the tests required to ensure that the system meets technical, operational and performance specifications, 60 days prior to the proposed test date. The test plan must be approved before the start of any testing. The test plan shall identify the capabilities and functions to be tested, and include detailed instructions for the setup and execution of each test and procedures for evaluation and documentation of the results.

Qualifications; G

The qualifications of the Manufacturer, Contractor, and the Installer to perform the work specified herein. This shall include proof of the minimum qualifications specified herein.

SD-06 Test Reports

Test Reports; G

Test reports in booklet form with witness signatures verifying execution of tests. Reports shall show the field tests performed to verify compliance with the specified performance criteria. Test reports shall include record of the physical parameters verified during testing. Test reports shall be submitted within 7 days after completion of testing to the Contracting Officer and/or 1st Communication Squadron.

SD-07 Certificates

Premises Distribution System; G

Written certification that the premises distribution system complies with the ANSI/TIA/EIA-568-A, ANSI/TIA/EIA-569-A, and ANSI/TIA/EIA-606 standards.

Materials and Equipment; G

Where materials or equipment are specified to conform, be constructed or tested to meet specific requirements, certification that the items provided conform to such requirements. Certification by a nationally recognized testing laboratory that a representative sample has been tested to meet the requirements, or a published catalog specification statement to the effect that the item meets the referenced standard, will be acceptable as evidence that the item conforms. Compliance with these requirements does not relieve the Contractor from compliance with other requirements of the specifications.

Installers; G

The Contractor shall submit certification that all the installers are factory certified to install and test the provided products.

1.6 DELIVERY AND STORAGE

Equipment delivered and placed in storage shall be stored with protection from the weather, humidity and temperature variation, dirt and dust or other contaminants.

1.7 OPERATION AND MAINTENANCE MANUALS

Commercial off the shelf manuals shall be furnished for operation, installation, configuration, and maintenance for all products provided as a part of the premises distribution system. Specification sheets for all cable, connectors, and other equipment shall be provided.

1.8 RECORD KEEPING AND DOCUMENTATION

1.8.1 Cables

Two copies of record drawings shall be provided in hard copy prior to acceptance testing. A record of all installed cable shall be provided in hard copy format per ANSI/TIA/EIA-606. The cable records shall include the required data fields for each cable and complete end-to-end circuit report for each complete circuit from the assigned outlet to the entry facility per ANSI/TIA/EIA-606. For fiber optic cable power meter, test results

shall be provided in a hard copy format. All twisted pair copper cables shall have disk copy output of the test results with Station ID. Provide test results 7 days prior to final testing.

1.8.2 Termination Hardware

A record of all installed patch panels and outlets shall be provided in hard copy format per ANSI/TIA/EIA-606. The hardware records shall include only the required data fields per ANSI/TIA/EIA-606.

PART 2 PRODUCTS

2.1 MATERIALS AND EQUIPMENT

Materials and equipment shall be the standard products of a manufacturer regularly engaged in the manufacture of the products and shall be the manufacturer's latest standard design that has been in satisfactory use for at least 1 year prior to installation. Materials and equipment shall conform to the respective publications and other requirements specified below and to the applicable requirements of NFPA 70.

2.2 UNSHIELDED TWISTED PAIR CABLE SYSTEM

2.2.1 Cable Insulation

For each individual Category 5e cable, the insulation material used on each pair shall be exactly the same in all physical, electrical, and chemical respects. The use of Teflon insulated plenum rated category 5e cable is required for both plenum and non-plenum environments. Plenum rated cable shall be type 4x0, where all four pairs are Teflon insulated. Type 3x1 and 2x2 are not acceptable.

2.2.2 Riser Cable

Backbone cable shall meet the requirements of ICEA S-80-576 and ANSI/TIA/EIA-568-A for Category 5e 100-ohm unshielded twisted pair cable. Cable shall be label-verified. Cable jacket shall be factory marked at regular intervals indicating verifying organization and performance level. Conductors shall be solid untinned copper 24 AWG. Cable shall be rated CMP per NFPA 70.

2.2.3 Horizontal Cable

Horizontal cable shall meet the requirements of ANSI/TIA/EIA-568-A-5 for Category 5e. Cable shall be label-verified. Cable jacket shall be factory marked at regular intervals indicating verifying organization and performance level. Conductors shall be solid untinned copper 24 AWG. Cable shall be 4 pair. Cable shall be rated CMP per NFPA 70. All horizontal cables to be installed on any particular installation will be from the same manufacturer.

2.2.4 Connecting Hardware

Connecting and cross-connecting hardware shall be the same category as the cable it serves as well as type 110 insulation of displacement connection termination. Hardware shall be in accordance with ANSI/TIA/EIA-568-A.

2.2.4.1 Telecommunications Outlets

Wall and desk outlet plates shall come equipped with as indicated and be labeled according to Langley AFB standard labeling scheme. Modular jacks shall be the same category as the cable they terminate and shall meet the requirements of ANSI/TIA/EIA-568-A. Modular jack pin/pair configuration shall be T568A per ANSI/TIA/EIA-568-A. Termination shall be type 10 insulation displacement connection. Modular jacks shall be unkeyed. Faceplates shall be provided and shall be impact resistant plastic and match surrounding decor. Outlet assemblies used in the premises distribution system shall consist of modular jacks assembled into both simplex, duplex and Quadru-plex outlet assemblies in single or double gang covers as indicated on the drawings. The modular jacks shall conform to the requirements of ANSI/TIA/EIA-568-A, and shall be rated for use with Category 5e cable in accordance with ANSI/TIA/EIA-568-A-5. Modular jacks color shall match horizontal cable color.

2.2.4.2 Patch Panels

Patch panels shall be rated category 5e and not be more than 48 port, shall consist of eight-position modular jacks, with rear mounted type 110 insulation displacement connection, arranged in rows on 19 inch rack mounted panels. Jack pin/pair configuration shall be T568A per ANSI/TIA/EIA-568-A. jacks shall be unkeyed. Panels shall be labeled in accordance with Langley AFB standard labeling scheme.

2.2.4.3 Patch Cords

Patch cords shall be cable assemblies consisting of flexible, twisted pair stranded wire with eight-position plugs at each end. Cable shall be label-verified. Cable jacket shall be factory marked at regular intervals indicating verifying organization and performance level. Patch cords shall be wired straight through; pin numbers shall be identical at each end and shall be paired to match T568A patch panel jack wiring per ANSI/TIA/EIA-568-A. Patch cords shall be keyed (non-booted). Patch cords shall be factory assembled and gray in color. Patch cords shall be 7 foot in length and conform to the requirements of ANSI/TIA/EIA-568-A-5 for Category 5e.

2.2.4.4 Terminal Blocks

Terminal blocks shall be wall mounted and/or rack mounted wire termination units consisting of insulation displacement connectors mounted in plastic blocks, frames or housings. Blocks shall be type 110 IDC which meet the requirements of ANSI/TIA/EIA-568-A, and shall be rated for use with Category 5e cable in accordance with ANSI/TIA/EIA-568-A-5. Blocks shall include cable management hardware. Insulation displacement connectors shall terminate 22 or 24 gauge solid copper wire as a minimum, and shall be connected in pairs so that horizontal cable and connected jumper wires are on separate connected terminals.

2.3 FIBER OPTIC CABLE SYSTEM

2.3.1 Backbone Cable

2.3.1.1 Multimode

Multimode fiber optic backbone cable shall meet the requirements of ANSI/TIA/EIA-568-A and ICEA S-83-596 for 12 strand 62.5/125 micrometer multimode graded index optical fiber cable. Numerical aperture for each fiber shall be a minimum of 0.275. Cable construction shall be tight

buffered type. Individual fibers shall be color coded for identification. Cable shall be imprinted with fiber count and aggregate length at regular intervals. Cable shall be rated OFNP per NFPA 70.

2.3.2 Horizontal Distribution Cable

2.3.2.1 Multimode

Multimode fiber optic horizontal cable shall meet the requirements of ANSI/TIA/EIA-568-A and ICEA S-83-596 for 12 strand 62.5/125 micrometer multimode graded index optical fiber cable. Numerical aperture for each fiber shall be a minimum of 0.275. Cable construction shall be tight buffered type, two strands. Individual fibers shall be color coded for identification. Cable shall be imprinted with fiber count, fiber type, and aggregate length at regular intervals of 3 feet. Cable shall be rated and marked OFNP per NFPA 70.

2.3.3 Connecting Hardware

2.3.3.1 Connectors

Connectors shall be ST type with ceramic ferrule material with a maximum insertion loss of .5 dB. Connectors shall meet performance requirements of ANSI/TIA/EIA-568-A. Connectors shall be field installable. Connectors shall utilize adhesive for fiber attachment to ferrule. Connectors shall terminate fiber sizes as required for the service. Station cable faceplates shall be provided and shall be ivory in color, impact resistant plastic, single gang or double gang, with double-sided female ST coupler as required.

2.3.3.2 Patch Panels

Patch panels shall be a complete system of components by a single manufacturer, and shall provide termination, splice storage, routing, radius limiting, cable fastening, storage, and cross-connection. Patch panels shall be 19 inch rack mounted panels. Patch panels shall provide strain relief for cables. Panels shall be labeled per Langley AFB standards. Patch panel connectors and couplers shall be ST type for termination for connectivity in patch panels, with ceramic ferrule material with a maximum insertion loff of 0.5 dB. Connectors shall meet performance requirements of EIA ANSI/TIA/EIA-568-A.

2.3.3.3 Patch Cords

Patch cords shall be cable assemblies consisting of flexible optical fiber cable with connectors of the same type as used elsewhere in the system. Optical fiber shall be the same type as used elsewhere in the system. Patch cords shall be complete assemblies from manufacturer's standard product lines.

2.4 EQUIPMENT RACKS

2.4.1 Floor Mounted Open Frame

Floor mounted equipment racks shall be aluminum relay racks with uprights to mount equipment 19 inches wide. Uprights shall be 3 inch deep channel, 1-1/4 inches wide, drilled and tapped 12-24 in a 1/2 inch pattern. Racks shall be provided with a standard top crossmember, and predrilled base plate to allow floor fastening. Open frame equipment racks shall be 7 feet

in height and clear coated. AC outlets shall be provided as shown.

2.4.2 Cable Management

Cable management shall be specifically manufactured for the purpose of routing cables, wires and patch cords horizontally and vertically on 19 inch equipment racks. Cable management shall consist of ring or bracket-like devices mounted on rack panels for horizontal use. Cable management shall mount to racks by screws and/or nuts and lockwashers. Cable management shall be provided above, below and to both sides of each patch panel on the standard 19-inch equipment rack(s). Vertical cable management will be provided between and to the ends of equipment racks, and provide front and rear vertical management. Vertical Cable management shall be of a type that utilizes duct fingers with snap on covers. Cable management will be provided in the rear of the rack, utilizing duct fingers with snap on cover style, or stand off bars. Velcro ties shall be utilized for binding of horizontal distribution wires within the telecommunications room trays and wire management systems.

2.4.3 Wall Mounted Cabinets

Wall mounted cabinets shall conform to UL 50 and have boxes constructed of zinc-coated sheet steel with dimensions not less than shown on drawings. Trim shall be fitted with hinged door and flush catch. Doors shall provide maximum openings to the box interiors. Boxes shall be provided with 3/4 inch plywood backboard painted white or a light color. A duplex AC outlet shall be installed within the cabinet.

2.5 EQUIPMENT MOUNTING BACKBOARD

Plywood backboards, 4 feet by 8 feet by 3/4 inch and void free, grade A, shall be provided covering no less than 2 walls, painted with gray colored fire resistive paint.

2.6 TELECOMMUNICATIONS OUTLET BOXES

Electrical boxes for telecommunication outlets shall be 4-11/16 inch square by 2-1/8 inches deep with minimum 3/8 inch deep single or two gang plaster ring as shown. Provide a minimum 1 inch conduit.

PART 3 EXECUTION

3.1 INSTALLATION

System components and appurtenances shall be installed in accordance with NFPA 70, manufacturer's instructions and as shown. Necessary interconnections, services, and adjustments required for a complete and operable signal distribution system shall be provided. Components shall be labeled in accordance with ANSI/TIA/EIA-606 and Langley AFB standards. Penetrations in fire-rated construction shall be firestopped in accordance with Section 07840 FIRESTOPPING. Conduits, outlets and raceways shall be installed in accordance with Section 16415 ELECTRICAL WORK, INTERIOR. Wiring shall be installed in accordance with ANSI/TIA/EIA-568-A and as specified in Section 16415 ELECTRICAL WORK, INTERIOR and EIA ANSI/TIA/EIA-569-A. Wiring, and terminal blocks and outlets shall be marked in accordance with ANSI/TIA/EIA-606. Cables shall not be installed in the same cable tray, utility pole compartment, or floor trench compartment with ac power cables. Cables not installed in conduit or wireways shall be properly secured and neat in appearance and, if installed

in plenums or other spaces used for environmental air, shall comply with NFPA 70 requirements for this type of installation. Cable tray installation will be provided for complete wire support within the telecommunications room, from room entrance to overhead rack area, providing complete cable support, when overhead wire installation methods are utilized.

3.1.1 Horizontal Distribution Cable

The rated cable pulling tension shall not be exceeded. Cable shall not be stressed such that twisting, stretching or kinking occurs. Cable shall not be spliced. Fiber optic cables shall be installed either in conduit or through type cable trays to prevent microbending losses. Copper cable not in a wireway shall be suspended per EIA ANSI/TIA/EIA-568-A recommendations a minimum of 8 inches above ceilings by cable supports no greater than 60 inches apart. Cable shall not be run through structural members or in contact with pipes, ducts, or other potentially damaging items. Placement of cable parallel to power conductors shall be avoided, if possible; a minimum separation of 12 inches shall be maintained when such placement cannot be avoided. Cables shall be terminated; no cable shall contain unterminated elements. Minimum bending radius shall not be exceeded during installation or once installed. Cable ties shall not be excessively tightened such that the transmission characteristics of the cable are altered. In raised floor areas, cable shall be installed after the flooring system has been installed. Cable 6 feet long shall be neatly coiled not less than 12 inches in diameter below each feed point in raised floor areas.

3.1.2 Riser and Backbone Cable

Vertical cable support intervals shall be in accordance with manufacturer's recommendations. Cable bend radius shall not be less than ten times the outside diameter of the cable during installation and once installed. Maximum tensile strength rating of the cable shall not be exceeded. Cable shall not be spliced.

3.1.3 Telecommunications Outlets

3.1.3.1 Faceplates

As a minimum each jack shall be labeled as to its function and a unique number to identify cable link as per contract drawings and Langley AFB Standards.

3.1.3.2 Cables

Maintenance loop or slack required for modification or re-termination of horizontal cabling shall be no less than ten feet, at the distribution closet and no less than 12 inches at the outlet. Slack at the user termination shall not be placed in the outlet box, but shall be installed at the nearest practical point to the outlet box (i.e. above the ceiling prior to entering the wall).

3.1.3.3 Pull Cords

Pull cords shall be installed in all conduit serving telecommunications outlets which do not initially have fiber optic or Cat 5e cable installed.

3.1.4 Terminal Blocks

Terminal blocks shall be mounted in orderly rows and columns. Adequate vertical and horizontal wire routing areas shall be provided between groups of blocks. Industry standard wire routing guides shall be utilized. Rack mounted 110 IDC terminal blocks will be used at the Intermediate Distribution Frame (IDF) point (Patch Panel end) for copper backbone cable cross connects. Wall mounted 110 IDC terminal blocks will be utilized at the Main Distribution Frame (MDF) or Demarcation Point for outside plant copper cross connect capability.

3.1.5 Unshielded Twisted Pair Patch Panels

Patch panels shall be mounted in equipment racks with sufficient modular jacks to accommodate the installed cable plant plus 25 percent spares. Cable management shall be provided above, below, between each panel and to both sides of each to include the front and rear.

3.1.6 Fiber Optic Patch Panels

Patch panels shall be mounted in equipment racks with sufficient ports to accommodate the installed cable plant plus 25 percent spares. A slack loop of fiber shall be provided within each panel. Loop shall be 3 feet in length provided as recommended by the manufacturer. The outer jacket of each cable entering a patch panel shall be secured to the panel to prevent movement of the fibers within the panel, using clamps or brackets specifically manufactured for that purpose.

3.1.7 Equipment Racks

Open frame equipment racks shall be bolted to the floor. Cable management shall be bolted or screwed to racks. Racks shall be installed level. Ganged racks shall be bolted together with cable mounted in between racks. Ganged rack cabinets shall have adjacent side panels removed. Wall mounted racks shall be secured to the mounting surface to prevent fully loaded racks from separating from the mounting surface.

3.1.8 Rack Mounted Equipment

Equipment to be rack mounted shall be securely fastened to racks by means of the manufacturer's recommended fasteners.

3.2 TERMINATION

Cables and conductors shall sweep into termination areas; cables and conductors shall not bend at right angles. Manufacturer's minimum bending radius shall not be exceeded. When there are multiple system type drops to individual workstations, relative position for each system shall be maintained on each system termination block or patch panel. The maximum pulling tensions for 4-pair 24 AWG horizontal UTP cables shall not exceed 25 lbf to avoid stretching the conductors during installation. Cable management precautions shall be observed to include the elimination of cable stress as caused by tension in suspended cable runs and tightly cinched cable bundles. An additional practice that shall be followed to reduce untwisting of pairs, is to strip back only as much cable jacket as required to terminate on connecting hardware. Also, in spaces with UTP terminations, cable bend radii shall not be less than four times the cable diameter for horizontal cable and shall not be less than ten times the cable diameter for multi-pair cable. Care shall be exercised to minimize twisting/kinking of cable during installation. The amount of untwisting in

a pair as a result of termination to connecting hardware shall not exceed 0.5 inches for category 5 cables from IDC.

3.2.1 Unshielded Twisted Pair Cable

Each pair shall be terminated on appropriate outlets, terminal blocks or patch panels. No cable shall be unterminated or contain unterminated elements. Pairs shall remain twisted together to within the proper distance from the termination as specified in ANSI/TIA/EIA-568-A. Conductors shall not be damaged when removing insulation. Wire insulation shall not be damaged when removing outer jacket.

3.2.2 Shielded Twisted Pair Cable

Each cable shall be terminated on panel-mounted connectors. Cables shall be grounded at patch panels using manufacturer's recommended methods. Shield braid shall be continuous to connector braid terminator. Wire insulation shall not be damaged when removing shield.

3.2.3 Fiber Optic Cable

Each fiber shall have connectors installed. The pull strength between the connector and the attached fiber shall be not less than 25 pounds. The mated pair loss, without rotational optimization, shall not exceed 1.0 dB. Fiber optic, ST Type connectors shall be installed per ANSI/TIA/EIA-568-A.

3.3 GROUNDING

Signal distribution system ground shall be installed in the telecommunications entrance facility and in each telecommunications closet in accordance with ANSI/TIA/EIA-607 and Section 16415 ELECTRICAL WORK, INTERIOR. Equipment racks shall be connected to the electrical safety ground.

3.4 SPARE PARTS

The Contractor shall provide the following additional materials required for facility startup.

a. 10 of each type outlet.

b. 10 of each type cover plate.

c. 1 of each type terminal block for each telecommunications closet.

d. 4 Patch cords of 10 feet for each telecommunications closet.

e. 1 Set of any and all special tools required to establish a cross connect and to change and/or maintain a terminal block.

3.5 ADMINISTRATION AND LABELING

3.5.1 Labeling

3.5.1.1 Labels

All labels shall be in accordance with ANSI/TIA/EIA-606 and Langley AFB Standards.

3.5.1.2 Cable

All cables will be labeled using color labels on both ends with encoded identifiers per ANSI/TIA/EIA-606.

3.5.1.3 Termination Hardware

All workstation outlets and patch panel connections will be labeled using color coded labels with encoded identifiers per ANSI/TIA/EIA-606.

3.6 TESTING

Materials and documentation to be furnished under this specification are subject to inspections and tests. All components shall be terminated prior to testing. Equipment and systems will not be accepted until the required inspections and tests have been made, demonstrating that the signal distribution system conforms to the specified requirements, and that the required equipment, systems, and documentation have been provided. Contractor shall provide Test Plan and Test Reports per Paragraph 1.5.

3.6.1 Unshielded Twisted Pair Tests

All metallic cable pairs shall be tested for proper identification and continuity. All opens, shorts, crosses, grounds, and reversals shall be corrected. Correct color coding and termination of each pair shall be verified in the communications closet and at the outlet. Horizontal wiring shall be tested from and including the termination device in the communications closet to and including the modular jack in each room. Backbone wiring shall be tested end-to-end, including termination devices, from terminal block to terminal block, in the respective communications closets. These test shall be completed and all errors corrected before any other tests are started.

3.6.2 Category 5e Circuits

All category 5e circuits shall be tested using a test set that meets the Class II accuracy requirements of TIA/EIA TSB 67 standard, including the additional tests and test set accuracy requirements of ANSI/TIA/EIA-568-A-5. Testing shall use the Basic Link Test procedure of TIA/EIA TSB 67, as supplemented by ANSI/TIA/EIA-568-A-5. Cables and connecting hardware which contain failed circuits shall be replaced and retested to verify the standard is met.

1. All installed CAT 5e cable shall be tested for attenuation loss at 100 megahertz and results reported in dB.

2. All installed CAT 5e cable shall be tested in both directions (TC to outlet, outlet to TC) for near end crosstalk (NEXT) at 100 megahertz and results reported.

3. All "auto-test" results obtained from the cable tester shall be supplied in both hard copy and on disk to the Contracting Officer. All of the pairs in each installed copper backbone (CMR) cable shall be tested for continuity.

4. All circuit terminations shall be verified for color code consistency.

3.6.3 Fiber Optic Cable

Unless stated otherwise, tests shall be performed from both ends of each circuit. Connectors shall be visually inspected for scratches, pits or chips and shall be reterminated if any of these conditions exist. Each circuit leg and complete circuit shall be tested for insertion loss at 850, 1310 and 1550 nm using a light source similar to that used for the intended communications equipment. High-resolution optical time domain reflectometer (OTDR) tests shall be performed from one end of each fiber. Scale of the OTDR trace shall be such that the entire circuit appears over a minimum of 80 percent of the X-axis. Fiber optic cable shall be also tested on reels prior to installation. All fiber optic testing shall be in compliance with ANSI/TIA/EIA-568-A.

-- End of Section --

SECTION 16721

FIRE DETECTION AND ALARM SYSTEM

PART 1 GENERAL

1.1 REFERENCES

The publications listed below form a part of this specification to the extent referenced. The publications are referred to within the text by the basic designation only.

NATIONAL FIRE PROTECTION ASSOCIATION (NFPA)

NFPA 72	(1996; Errata Oct 96, Dec 96; TIA 96-1, 96-2, 96-3) National Fire Alarm Code
NFPA 90A	(1996) Installation of Air Conditioning and Ventilating Systems

1.2 OVERVIEW

The new equipment shall be properly installed, completely interconnected and placed in operation. The system shall provide electrically supervised fire alarms of coded type as specially listed below. Codes shall be directed by the Base Fire Chief.

1.2.1 Operation

Operation shall be as described in Part 3.

1.2.2 Installation

The installation shall conform in all respects to the NFPA Fire Code. The Contractor shall contact Contract Management before beginning installation (764-1386).

1.3 MATERIALS AND EQUIPMENT

1.3.1 General Requirements

Materials and equipment shall be standard products of the manufacturer's latest design and suitable to the functions, they shall be duplicates produced any one manufacturer. The name of the manufacturer and the serial numbers shall appear on all major components. Locks for similar devices shall be keyed alike. Alarm devices shall be installed complete with standard boxes and mounting hardware. Devices installed outside shall be weatherproof.

1.3.2 Quality Requirements

All materials and equipment shall be UL listed. The Contractor shall submit proof and Manufacturer's Catalog Data that the items furnished under this specification conform to this requirement. Only currently manufactured equipment shall be installed. Availability of replacement parts shall be guaranteed for a minimum of one year after installation.

1.3.3 Fire Alarm Equipment

All removed fire alarm equipment, excluding conduit and wiring, shall remain the property of the Government and shall be turned over by the Contractor to the I & C Shop, Building 328.

1.4 CONTRACTOR QUALIFICATIONS

The system shall be installed by an experienced firm regularly engaged in the installation of automatic fire detection and alarm systems in accordance with NFPA standards. The Contractor must be certified by the manufacturer of the fire alarm equipment to install and test the alarm system. Certification or proper installation in accordance with NFPA standards shall be submitted by the Contractor or representative of the manufacturer of the alarm upon completion of the installation.

1.5 SUBMITTALS

The following shall be submitted in accordance with Section 01330, SUBMITTAL PROCEDURES:

SD-02 Shop Drawings

Shop Drawings shall be submitted by the Contractor and approved before installation. These drawings shall consist of a complete list of equipment and materials, complete wiring schematic diagrams for the equipment furnished, equipment layout and connection, and other details required to demonstrate that the system has been coordinated and will properly function as a unit. The record drawings and instruction manuals shall be submitted by the Contractor 7 days prior to conducting the operational test.

SD-03 Product Data

Manufacturer's Catalog Data

Catalog cuts, brochures, circulars, specifications, product data and printed information in sufficient detail and scope to verify compliance with the requirements of the contract documents.

As a minimum, the manufacturer's catalog data submittal should include the following: Fire Alarm Control Panel (FACP), transmitter , pull stations, batteries, battery charger, smoke detectors, heat detectors, duct detectors, audiovisual devices and visual devices

Batteries

Substantiating battery calculations for supervisory and alarm power requirements. Ampere-hour requirements for each system component and each panel component, and the battery recharging period shall be included.

Voltage Drop

Voltage drop calculations for notification appliance circuits to indicate that sufficient voltage is available for proper appliance operation.

Spare Parts

As soon as practicable after approval of the list of equipment, and prior to the final inspection, the Contractor shall furnish three (3) copies of spare-parts data for each different item of equipment listed. The data shall include a complete list of parts and supplies that are either

normally furnished at no extra cost with the purchase of the equipment or specified below to be furnished as part of the contract; and a list of additional items recommended by the manufacture to assure efficient operation for a period of 120 days at the particular installation.

Detailed as-built, reproducible (mylar) drawings shall be provided by the Contractor and shall include the exact location of all existing and installed fire alarm devices, including the order of wiring for all new devices; and detailed wiring diagrams showing the hook-up and interconnection of all alarm devices, number and size of wire used, color coding, and the type, amount, manufacturer, model, and a part number of all fire alarm devices.

Record Drawing Software

Provide one (1) set of floppy diskettes containing AUTOCAD Version 14 or later based drawings, in DWG or DXF format of all as-built drawings and schematics.

SD-06 Test Reports

Testing

Test reports, in booklet form, showing field tests performed to prove compliance with the specified performance criteria, upon completion and testing of the installed system. Each test report shall document readings, test results and indicate the final position of controls. The Contractor shall include the NFPA 72 Certificate of Completion and NFPA 72 Inspection and Testing Form, with the appropriate test reports.

SD-07 Certificates

Testing

Detailed test procedures, prepared and signed by a Registered Professional Engineer or a NICET Level 3 Fire Alarm Technician, for the fire detection and alarm system 14 days prior to performing system tests.

Equipment

Certified copies of current approvals or listings issued by an independent test lab if not listed by UL, FM or other nationally recognized testing laboratory, showing compliance with specified NFPA standards.

Qualifications

Proof of qualifications for required personnel. The installer shall submit proof of experience for the Professional Engineer, fire alarm technician, and the installing company.

SD-10 Operation and Maintenance Data

Three copies of operating manual outlining step-by-step procedures required for system startup, operation, and shutdown. The manual shall include the manufacturer's name, model number, service manual, parts list, and complete description of equipment and their basic operating features. Three copies of maintenance manual listing routine maintenance procedures, possible breakdowns and repairs, and troubleshooting guide. The manuals shall include conduit layout, equipment layout and simplified wiring, and control

diagrams of the system as installed. Documents shall be bound in a suitable binder adequately marked or identified on the spine and front cover. A table of contents page shall be included and marked with pertinent contract information. Tabs shall be provided to separate differ ant types of documents, such as catalog ordering information, drawings, instructions and spare parts warranted by the quantity of documents included under separate tabs or dividers.

PART 2 PRODUCTS

2.1 SIGNALING DEVICES

Audible signaling devices shall be heavy-duty type, 24 volts DC, mounted on the wall, below the ceiling, at least seven feet above the floor. Actual locations shall be adjusted as necessary to provide the required sound coverage. Devices shall be red in color. Horns shall produce a sound output rating of at least 90 decibels at 10 feet.

2.1.1 Fire Alarm Horns/Strobes

Horns/Strobes shall be supervised, modular DC type with adjustable sound output. Twin projectors shall be installed unless otherwise noted on drawings. Horns installed in open hangar or other high noise areas shall include a red visual indicator (light).

2.2 MANUAL FIRE ALARM BOXES

Pull Stations shall be of the non-coded, non-break glass type, with a key operated test-reset lock, and shall be located near exits in the approximate locations shown, semi-flush mounted 50 inches above floor. Stations shall be metal finished in red, with instructions of contrasting color. Wording shall not include "LOCAL ALERT".

2.3 FIRE DETECTION EQUIPMENT

Fire detection equipment shall be installed as shown. Actual locations shall be adjusted to avoid obstructions and to comply with NFPA standards. Areas with raised floors or suspended ceilings shall have detectors installed to provide protection of these concealed areas.

2.3.1 Smoke Detectors

Smoke detectors shall be multi-chambered ionization type or photoelectric type with a dual chambers and LED lamp source. The sensitivity shall be adjustable within UL specifications to compensate for conditions under which it is to operate. All components shall be corrosion resistant and vibration shall have no effect on detector actuation. The device shall include a 135 degree F heat detector. The detector shall be mounted on a firmly supported four inch outlet box. Detectors shall be 2-wire type, 24 volt DC.

2.3.2 Heat Detectors

Heat detectors shall be fixed temperature (135 degrees F) type unless otherwise indicated or specified. Heat detectors installed in mechanical rooms, attics, or other non-cooled areas as specified shall be fixed temperature (190 degrees F). Exposed detectors in other than mechanical rooms or attics shall be of the low silhouette type. Detectors shall not be supported from suspended acoustical tile ceilings.

2.3.3 Duct Detector

In air handling systems, smoke or heat detectors approved for duct installation shall be installed and arranged to automatically shut down fans as required by NFPA 90A. Required detectors shall be installed so as to allow convenient access for testing and cleaning. The detectors shall be resettable at the fire alarm panel. Power for the detector shall be supplied from the fire control panel. All wiring and controls required for compliance with this specification shall be furnished, installed and connected by the Contractor. Each air handler shall be individually zoned for annunciation in the control panel.

2.4 CONTROL PANEL

Control panel shall be installed as part of the system in the building and shall be approved for use with the fire-detecting equipment, manual fire-alarm boxes or stations, and alarm-sounding appliances. The control panel shall be located where indicated and shall be housed in a substantial steel cabinet with lock and key. The control panel shall be painted red inside and out. The control panel shall include a suitable means for testing the system through each electrically supervised circuit. The panel shall be arranged so as to operate the alarm signaling devices in the event of fire and to continue operation until silenced by a switch within the unit cabinet. The control panel shall operate to allow an alarm from any one zone to be silenced, but allows subsequent alarms from other zones to resound the alarm. Status indicators (LEDs) shall be plainly visible when the cabinet of the control panel is closed. Circuit boards shall be the plug-in type. All cabinet knockouts or holes shall be patched and sealed. Supervision of all alarm devices, including pull stations, signaling devices and detectors shall be maintained. Circuitry and zoning modules shall be Class "A". Individual supervisory LEDs shall be provided to monitor the primary power, the charger, the batteries, and wiring, for "ground fault". The panel shall include a test switch to test all LEDs. In addition, the control panel shall have an on/off switch to de-energize the incoming A/C power.

2.4.1 Annunciator Panel

Annunciator panel shall be part of the fire alarm control panel. An annunciator window shall be provided for each zone. Each zone annunciator shall include an amber trouble lamp (LED) and a red alarm lamp (LED). Each lamp shall provide specific identification of the zone area by means of a permanently attached rigid plastic or metal sign with either raised or engraved letters. In no case shall zone identification consist of the words "Zone 1, Zone 2," etc., but shall consist of the description of the device locations. Zoning shall be as shown on the drawings. All spare annunciators shall be labeled as such. Spare zones shall be active, Class "A", plug-in modules installed in the control panel. A warranty card shall be firmly attached in the control panel, providing general warranty information; such as contract number, project number, name and phone number of the Contractor, effective dates of warranty, etc. Near the annunciator panel a one-line drawing shall be provided; indicating the general room arrangement of the detector and alarm locations, zone configuration and wiring order is all devices. In mechanical rooms and similar shop area, these one-line drawings shall be installed in a picture frame with class cover. In other finished areas, such as hallways and offices, these drawings shall be installed in plastic protective covers and shall be located within the panel.

2.5 TRANSMITTERS

The main base station presently employs a Monaco Enterprise, Inc., Model D-700 Central Radio Transmitter/Receiver System, tuned for a VHF FM frequency of 143.55 MHz. The unit utilizes a Monaco Model BSA-1 Omni-Directional Antenna for transmitting and receiving. The building transmitter/receiver shall be of the coded type that is fully compatible with the central system. The transmitter shall be electrically supervised, designed to transmit coded fire alarm signals and distinctive code trouble signal over the tuned radio waves to the central alarm location. Transmission of a coded trouble signal shall automatically result in a break in a fire detecting circuit or interior manual fire-alarm box circuit or from failure of main power supply for transmitters or alarm bell operation. Provisions shall be made also for a restoration signal upon restoration of the transmitter, interior circuits and power supply to normal standby condition after a fire alarm or trouble signal. A fire-alarm signal consists of not less than three complete transmissions of a code number identifying the transmitter is acceptable as a trouble signal and one or more as a restoration signal. The transmitter shall come complete with a compatible omni-directional antenna, including mounting hardware and coaxial cable, necessary to provide an operational system. System shall be suitable for operating up to a range of 35 miles. The antenna system shall be grounded to a separate ground rod system, complete with lighting arrestor in rainproof enclosure with a minimum of a No. 6 ground conductor. The transmitter shall be housed in a lockable metal cabinet painted red inside and out. A stamped or engraved plate bearing the code number of the transmitter shall be securely attached to the front of the cabinet. The existing base central alarm is located in Building 375. The Contractor shall provide 3 spare zone modules.

2.6 SPARE ZONES

The Contractor shall program zones as directed by the CONTRACTING OFFICER. The Contractor shall provide a minimum of 4 spare zones spare zone modules completely installed, tested and wired to the output terminal strip for connection of new zone detectors. The spare zone modules shall be installed complete in the annunciator panels, control panels and the transmitter. All interconnection between each panel and the transmitter shall be wired complete.

2.7 POWER SUPPLY

2.7.1 Primary Power Supply

Primary power supply for the alarm system shall be low voltage rectified direct circuit (24 V). Rectifiers shall be of the solid state type. Point of connection shall be the line side of the main service switch, using approved lugs and a fused disconnect switch (painted red), installed within ten feet of the main service switch, and sized in accordance with **NEC**. The connection shall comply with applicable requirements of Standard No. 72 of the National Fire Protection Association (NFPA 72). 120-volt power-supply wiring shall be in conduit or metallic tubing. Transformer, rectifier, resistor(s), and other required power-supply components shall be incorporated in the control unit, or a separate power-supply components shall be incorporated in the control unit, or a separate power-supply unit may be furnished and installed if approved for the application by the Contracting Officer.

2.7.2 Standby Power Supply

Standby power that will insure operation of all of the fire-alarm signaling devices within the building and activation of the transmitter in the event of power failure shall be provided by stoppage battery with a transfer switch. The transfer to battery shall be automatic upon failure of the primary power supply; indicated by a trouble signal at the control alarm location; and arranged so there will be no strain on the battery except on transfer and during a fire alarm. Restoration of primary power supply shall automatically disconnect the battery and reconnect the main supply. The batteries shall be housed in the control unit cabinet. Trickle charge shall be provided to maintain the emergency power supply at peak reserve power. The charger will automatically switch to a high rate charge if the battery voltage drops below full charge capacity.

2.7.3 Batteries

Back-up power shall consist of panel mounted, long-life, sealed, rechargeable gel cell batteries, of the power amperes-hours rating to operate the system and master box tripping circuits for a minimum of 24 hours under normal conditions, and to operate all audible signaling devices and transmission and control devices under alarm conditions for 15 minutes. Batteries shall be sized to allow for 20% growth in the alarm system. Calculations substantiating the above requirements shall be submitted by the Contractor to the Contracting Officer for approval before installation. Batteries shall be separated from the cabinet by a piece of non-conductive rubber material to provide additional corrosion protection.

2.8 TOOLS AND SPARE PARTS

The Contractor shall furnish any special tools necessary for the maintenance of the new equipment; one spare set of fuses for each control unit; one set of keys for each keyed device; one spare detector of each type and rating; one spare pull station, and one spare signaling device.

2.9 WIRING AND RACEWAY

AC operating power shall be obtained from the line side of the incoming building power source ahead of all building services. An independent properly fused safety switch, with provisions for locking the cover and operating handle in the "power on" position shall be provided for this connection. The switch box shall be painted red with white letters that say "FIRE ALARM PANEL SWITCH." Wiring shall be in accordance with the requirements of NFPA 70, 72, and 73. Wire for 120V circuits shall be No. 12 AWG minimum and sized based on voltage drop. Wiring shall be in conduit; electrical metallic tubing or the surface mounted raceway. Conduit sizing shall be in accordance with the National Electric Code. Concealed EMT shall be used in areas where lowered ceilings are installed and where new walls are being constructed. IMC shall be used out-of-doors or in wet locations. Surface mounted EMT painted to match the surface, or wire mold of the same color as the surface shall be used. All exposed supporting hardware shall be painted to match the surface. Raceways shall be securely and rigidly fastened in a place to the ceiling supports at intervals not more than 10 feet. Raceways and supporting hardware shall be from the actual ceiling or roof - not suspended on false ceilings. Fastenings shall be by wood screws to wood; by toggle bolts on hollow masonry units; by expansion bolts on concrete or brick; and by machine screws, welded threaded studs, heat-treated of spring-steel-tension clamps on steel work. Low voltage DC wiring shall be (90 degrees C), stranded

copper, No. 14 AWG installed in conduit. Wires shall be connected directly from the transmitter to the new building antenna. All alarm device wiring shall be Class "A". All wiring shall test free grounds or crosses between conductors before the control panel circuit boards are installed.

2.10 CONDUCTOR IDENTIFICATION

All circuit conductors shall be identified within each enclosure where a tap, splice or termination is made. Conductor identification shall be by color-coding of wires. Coding shall be by types of device and zone. A typed directory with plastic cover, showing color code used shall be permanently attached to the inside cover of each new control panel. The color-coding shall also be indicated on the record drawings.

PART 3 SYSTEM OPERATION & TESTING

3.1 SYSTEM OPERATION

The fire alarm system shall automatically initiate fire alarm signals wherever any manual or automatic fire detecting devices are placed into an alarm mode or the activation of the hood fire suppression system. Upon activation, the system shall indicate areas of annunciation (zone) and at the same instant deactivate HVAC fans, sound all local signaling devices, and transmit a coded signal to the Central Fire Station in Bldg 367. Signal identification for both fire and line-trouble conditions shall be transmitted over the new radio wave antenna system. Reporting signals at central-alarm locations shall be made by annunciator identification, signal light or drops. The Contractor shall coordinate with the Base Fire Department to insure proper annunciation to existing alarm equipment in Bldg 367.

3.2 TESTING

After complete installation of the equipment, and after the Contractor has conducted a functional test to insure that all components are operational; the Contractor shall perform an operational test in the presence of the representative of the Contracting Officer, to demonstrate that the requirements of the specifications have been met. All detectors and pull stations shall be activated by the Contractor as directed. Any device or components that fail the tests shall be replaced and reconnected by the Contractor at no cost to the Government. The Contractor shall provide all necessary equipment for the test and shall provide at least a 7-day notice prior to testing. A representative of the manufacturer of the fire alarm system shall be present during the test. This operational test shall be performed prior to final acceptance.

-- End of Section --

SECTION 16770

RADIO AND PUBLIC ADDRESS SYSTEMS
07/89

PART 1 GENERAL

1.1 REFERENCES

The publications listed below form a part of this specification to the extent referenced. The publications are referred to in the text by basic designation only.

ELECTRONIC INDUSTRIES ALLIANCE (EIA)

EIA ANSI/EIA/310-D	(1992) Cabinets, Racks, Panels, and Associated Equipment

NATIONAL FIRE PROTECTION ASSOCIATION (NFPA)

NFPA 70	(1999) National Electrical Code

1.2 SUBMITTALS

Government approval is required for submittals with a "G" designation; submittals not having a "G" designation are for information only. When used, a designation following the "G" designation identifies the office that will review the submittal for the Government. The following shall be submitted in accordance with Section 01330 SUBMITTAL PROCEDURES:

SD-02 Shop Drawings

Radio and Public Address System; G
Installation; G

Detail drawings consisting of a complete list of equipment and material, including manufacturer's descriptive and technical literature, performance charts and curves, catalog cuts, and installation instructions. Detail drawings shall also contain complete wiring and schematic diagrams and any other details required to demonstrate that the system has been coordinated and will properly function as a unit. Drawings shall show proposed layout of equipment and appurtenances, and equipment relationship to other parts of the work including clearances for maintenance and operation.

Detail drawings consisting of a complete list of equipment and material, including manufacturer's descriptive and technical literature, performance charts and curves, catalog cuts, and installation instructions. Detail drawings shall also contain complete wiring and schematic diagrams and any other details required to demonstrate that the system has been coordinated and will properly function as a unit. Drawings shall show proposed layout of equipment and appurtenances, and equipment relationship to other parts of the work including clearances for maintenance and operation.

SD-06 Test Reports

Approved Test Procedures; G

Test plan and test procedures for the acceptance tests. The test plan and test procedures shall explain in detail, step-by-step actions and expected results to demonstrate compliance with the requirements specified. The procedure shall also explain methods for simulating the necessary conditions of operation to demonstrate system performance.

Acceptance Tests; G

Test reports in booklet form showing all field tests performed to adjust each component and to prove compliance with the specified performance criteria, upon completion and testing of the installed system. The reports shall include the manufacturer, model number, and serial number of test equipment used in each test. Each report shall indicate the final position of controls and operating mode of the system.

SD-10 Operation and Maintenance Data

Radio and Public Address System; G

Six copies of the operation manual outlining the step-by-step procedures required for system start up, operation, and shutdown. The manual shall include equipment layout and schematics of simplified wiring and control diagrams of the system as installed, the manufacturer's name, model number, and brief description of all equipment and their basic operating features. Six copies of maintenance manual listing routine maintenance procedures, possible breakdowns and repairs, and troubleshooting guides. The manual shall include equipment layout and schematics and simplified wiring and control diagrams of the system.

1.3 SYSTEM DESCRIPTION

The radio and public address system shall consist of an audio distribution network to include amplifiers, mixers, speakers, cabling, and any ancillary components required to meet the required system configuration and operation.

1.3.1 Single Channel System

The system shall control and amplify an audio program for distribution within the areas indicated. Components of the system shall include a mixer-amplifier mike input expander power amplifier speaker system, compact disc tape equipment AM-FM tuner cabling, television equipment, and other associated hardware.

1.3.2 System Performance

The system shall provide even sound distribution throughout the designated area, plus or minus 3 dB for the 1-octave band centered at 4000 Hz. The system shall provide uniform frequency response throughout the designated area, plus or minus 3 dB as measured with 1/3-octave bands of pink noise at locations across the designated area selected by the Contracting Officer. The system shall be capable of delivering 75 dB average program level with additional 10 dB peaking margin sound pressure level (SPL) to any location

in the area at an acoustic distortion level below 5 percent total harmonic distortion (THD). Unless otherwise specified the sound pressure reference level is 20 micro Pascal.

1.4 DELIVERY AND STORAGE

Equipment placed in storage until installation time shall be stored with protection from the weather, humidity and temperature variations, dirt and dust, and other contaminants.

1.5 VERIFICATION OF DIMENSIONS

The Contractor shall become familiar with the details of the work and working conditions, shall verify dimensions in the field, and shall advise the Contracting Officer of any discrepancies before performing the work.

PART 2 PRODUCTS

2.1 STANDARD PRODUCTS

Material and equipment to be provided shall be the standard products of a manufacturer regularly engaged in the manufacture of such products, and shall essentially duplicate material and equipment that have been in satisfactory use at least 2 years. All components used in the system shall be commercial designs that comply with the requirements specified. Equipment shall be supported by a service organization that is, in the opinion of the Contracting Officer, reasonably convenient to the site.

2.1.1 Identical Items

Items of the same classification shall be identical. This requirement includes equipment, modules, assemblies, parts, and components.

2.1.2 Nameplates

Each major component of equipment shall have the manufacturer's name, address, model and catalog number, and serial number on a plate secured to the equipment.

2.2 POWER AMPLIFIERS

Power amplifiers as a minimum conform to the following specifications:

Rated power output:	150 watts RMS
Frequency Response:	Plus or Minus 2 dB, 60-13,000 Hz
Distortion:	Less than 2 percent at RPO, 600-13,000 Hz
Input Impedance:	50 k ohm unbalanced
Output Impedance:	83.3, 10.4, 8.0, and 4.0 ohms
Output voltage:	70.7, 25, 22, and 15.5 volts
Power Requirement:	110-125 Vac 60 Hz

2.3 MIXER AMPLIFIER

Mixer amplifier shall as a minimum conform to the following specifications:

Rated Power Output:	100 watts RMS
Frequency Response:	Plus or Minus 2 dB, 60-13,000 Hz
Distortion:	Less than 1 percent at RPO, 60 - 13,000 Hz
Inputs:	2 microphones (high impedance or low-impedance unbalanced 2 Aux. (high-impedance)
Output Impedance:	Balanced 4, 8, and 16 ohms
Output Voltage:	25 and 70 volts
Power Requirement:	110-125 Vac 60 Hz

2.4 LOUDSPEAKERS

2.4.1 Cone Speaker

The cone speaker shall as a minimum conform to the following specifications:

Application:	Wall baffle, Ceiling or Column as indicated
Frequency range:	60 to 12,000 Hz
Power Rating:	Normal - 7 watts Peak - 10 watts
Voice Coil Impedance:	8 ohms
Line Matching Transformer Type:	25/70 volt line
Capacity:	2 watts
Magnet:	8 ounces or greater
Primary Taps:	0.5, 1, and 2 watts
Primary Impedance:	25 volts - 1250, 625, and 312 ohms 70 volts - 10k, 5k, and 2.5k ohms
Frequency Response:	30 - 20,000 Hz
Insertion Loss:	Less than 1 dB

2.4.2 Horn Speaker

The horn speaker shall as a minimum conform to the following specifications:

Application:	As indicated

Frequency Response:	400 - 14,000 Hz
Power Taps:	70 volt line - .9, 1.8, 3.8, 7.5, and 15 watts
Impedance:	5000, 2500, 1300, 670, 330, 90, and 45 ohms
Power Rating:	Normal - 7 watts Peak - 15 watts

2.4.3 Speaker Enclosures

Wall baffle or column speaker enclosures shall be of the tuned-port design for precise balancing and tuning of the speaker. The enclosures shall be constructed throughout of 3/4 inch, high density board, with screwed and glued joints, durably braced, and padded with fiberglass where acoustically required. For wall mounting applications, the wall baffle enclosure shall come equipped with a wall-mounting bracket designed to assure a rigid mounting to any flat surfaces. Column speaker enclosures shall have a 25 degree vertical dispersion and 90 degrees horizontal dispersion. The effective length of throw shall be a minimum of 50 feet.

2.5 AM/FM EQUIPMENT

2.5.1 AM/FM Tuner

AM/FM tuner shall be rack-mounted and shall as a minimum conform to the following characteristics:

Tuning Range:	AM - 540 to 1605 kHz FM - 88 to 108 MHz
Selectivity:	60 dB on FM 40 dB on AM
Sensitivity:	FM - 1.5 microvolts AM - 2.0 microvolts
Capture Ratio:	1.0 dB
Power Requirement:	110-125 Vac, 60Hz

2.5.2 AM/FM Antenna

The AM/FM antenna shall be roof-mounted, either combined and suitable for both AM and FM reception or separate AM and FM antennas and shall cover all frequency bands specified for radio tuners. The antenna system shall be coordinated with the TV system. The antenna shall be supported at least 5 feet clear above the roof by means of self-supported or guyed mast. The system shall be furnished complete with a transformer, insulators, crossover insulator, 75 ohm coaxial cable of proper length, lightning arresters, coupling transformer and divider network at the radio tuners. Attenuation of the coaxial cable span between the antenna and amplifier shall not exceed 2.5 dB at 108 MHz.

2.6 PRIORITY RELAYS AND CONTROLS

Priority relays and controls required to accomplish operations specified shall be provided. Relays shall be completely enclosed with a plastic dust cover for maximum protection against foreign matter, and shall be plug-in type. Relays shall be provided with a diode wired across the relay coil for transient suppression and shall be installed utilizing factory-prewired, rack-mounted receptacle strips. Coil shall be maximum 24 volts dc.

2.7 SWITCHES AND CONTROLS

2.7.1 Radio System Control Switch

The loudspeaker in each room, or group of speakers in a room, shall be provided with a flush program channel selector rotating-switch knob. The switch shall be mounted at location and height above the floor as shown and in accordance with Section 16415 ELECTRICAL WORK, INTERIOR. A volume control shall be installed with a switch at each station and shall be of the auto transformer type and set so that the maximum volume is sufficient for the area while not disturbing adjacent areas. If music is turned down or off, the paging signal shall override controls except speakers designated for music only. Each device plate shall be satin-finished, corrosion-resisting steel permanently marked to indicate the channel selected.

2.7.2 Remote Loudspeaker ON/OFF Switches

Remote switches shall be toggle switch 2-pole, wall-mounted, single gang type with engraved switch plates finished to match the approved finish of electrical wall switches. Low-voltage priority override relays shall be provided as part of the switches with all wiring to the racks to allow override of the ON/OFF switches for priority announcements.

2.7.3 Remote Loudspeaker Volume Controls

Remote volume controls shall be an auto transformer type with detented 3 dB steps and an OFF position. The controls shall be wall-mounted in single-gang outlet boxes and furnished with engraved switching plates finished to match approved finish of electrical wall switches. Insertion loss of the controls shall not exceed 0.6 dB and the power-handling capacities of the control shall be 10 watts. Low-voltage priority override relays shall be furnished as part of these controls with all wiring to the racks to allow override of the volume controls for priority announcements.

2.8 EQUIPMENT RACKS

Equipment shall be mounted in enclosed lockable cabinets in accordance with EIA ANSI/EIA/310-D and located as shown on drawings. Ventilated rear panels, solid side panels, and solid top panels shall be provided. Perforations or louvers may be provided in front panels to ensure adequate ventilation of equipment. The racks and panels shall be factory finished with a uniform baked enamel over rust inhibiting primer.

2.9 SPEAKER AND MICROPHONE CABLE

Cables shall be of the gauge required depending upon the cable run length. In no case shall any cable be used which is smaller than 20 AWG. Insulation on the conductors shall be polyvinyl chloride (PVC) or an equivalent synthetic thermoplastic not less than 0.009 inch. Cables shall be shielded with a 34-gauge tinned soft copper strand formed into a braid.

Cables shall be jacketed with a PVC compound. The jacket thickness shall be 0.0200 inch minimum.

2.10 POWER SURGE PROTECTION

Major components of the system such as power amplifiers, mixer-preamplifiers, phonographs, and tuners, shall have a device, whether internal or external, which provides protection against voltage spikes and current surges originating from commercial power sources.

2.11 SIGNAL SURGE PROTECTION

Major components of the system shall have internal protection circuits which protects the component from mismatched loads, direct current, and shorted output lines.

PART 3 EXECUTION

3.1 INSTALLATION

All equipment shall be installed as indicated and specified, and in accordance with the manufacturer's recommendations except where otherwise indicated. Equipment mounted out-of-doors or subject to inclement conditions shall be weatherproofed.

3.1.1 Equipment Racks

Racks shall be mounted side-by-side and bolted together. Items of the same function shall be grouped together, either vertically or side-by-side. Controls shall be symmetrically arranged at a height as shown. Audio input and interconnections shall be made with approved shielded cable and plug connectors; output connections may be screw terminal type. All connections to power supplies shall utilize standard male plug and female receptacle connectors with the female receptacle being the source side of the connection. Inputs, outputs, interconnections, test points, and relays shall be accessible at the rear of the equipment rack for maintenance and testing. Each item shall be removable from the rack without disturbing other items or connections. Empty space in equipment racks shall be covered by blank panels so that the entire front of the rack is occupied by panels.

3.1.2 Wiring

Wiring shall be installed in rigid conduit, intermediate metal conduit, cable trays, or electric metallic tubing as specified in Section 16415 ELECTRICAL WORK, INTERIOR. Wiring for microphone, grounding, line level, video, speaker and power cables shall be isolated from each other by physical isolation and metallical shielding. Shielding shall be terminated at only one end.

3.2 GROUNDING

All grounding practices shall comply with NFPA 70. The antenna mast shall be separately grounded. The system shall utilize a multiple-point signal grounding scheme where conductive path connections are required between each piece of equipment and the reference ground point. An isolated ground bar for power shall be provided for the connection of the main system components. The ground bar shall be connected to the main service ground utilizing a No. 6 conductor.

3.3 ACCEPTANCE TESTS

After installation has been completed, the Contractor shall conduct acceptance tests, utilizing the approved test procedures, to demonstrate that equipment operates in accordance with specification requirements. The Contractor shall notify the Contracting Officer 7 days prior to the performance of tests. In no case shall notice be given until after the Contractor has received written Contracting Officer approval of the test plans as specified. The acceptance tests shall include originating and receiving messages at specified stations, at proper volume levels, without cross talk or noise from other links or nondesignated units.

3.4 TRAINING

The Contractor shall conduct a training course for 2 members of the operating and maintenance staff as designated by the Contracting Officer. The training course will be given at the installation during normal working hours for a total of 8 hours and shall start after the system is functionally complete but prior to final acceptance tests. The field instructions shall cover all of the items contained in the approved operating and maintenance manuals, as well as demonstrations of routine maintenance operations. The Contracting Officer shall be notified at least 14 days prior to the start of the training course.

-- End of Section --