| **SOLICITATION, OFFER, AND AWARD** *(Construction, Alteration, or Repair)* | 1. SOLICITATION NO. W91236-04-R-0039 | 2. TYPE OF SOLICITATION [ ] SEALED BID (IFB) [X] NEGOTIATED *(RFP)* | 3. DATE ISSUED 09-Sep-2004 | PAGE OF PAGES 1 OF 142 |
|---|---|---|---|---|

**IMPORTANT - The "offer" section on the reverse must be fully completed by offeror.**

| 4. CONTRACT NO. | 5. REQUISITION/PURCHASE REQUEST NO. W26GLG-4197-3113 | 6. PROJECT NO. |
|---|---|---|

| 7. ISSUED BY CODE W91236 | 8. ADDRESS OFFER TO *(If Other Than Item 7)* CODE |
|---|---|
| USA ENGINEER DISTRICT, NORFOLK<br>CONTRACTING OFFICE<br>803 FRONT STREET<br>NORFOLK VA 23510-1096 | **See Item 7** |
| TEL: FAX: 757-441-7183 | TEL: FAX: |

| 9. FOR INFORMATION CALL: | A. NAME | B. TELEPHONE NO. *(Include area code)* *(NO COLLECT CALLS)* |
|---|---|---|
| | DEBORA S GRAY | 757-441-7551 |

**SOLICITATION**

**NOTE: In sealed bid solicitations "offer" and "offeror" mean "bid" and "bidder".**

10. THE GOVERNMENT REQUIRES PERFORMANCE OF THE WORK DESCRIBED IN THESE DOCUMENTS *(Title, identifying no., date):*

This procurement is for the solicitation for Hydrant Fuel System, Langley Air Force Base, VA. Construct type III constant pressure hydrant fueling system. Includes a 2,400 GPM pump-house, control rooom modification of two bulk storage tanks, emergency generator, security fencing, fire detection, steel supply and return piping, 10 hydrant pits, isolation valve pits and demolition and disposal of one type I pump-house with tanks.

THIS IS AN UNRESTRICTED PROCUREMENT. NAICS CODE 237990

11. The Contractor shall begin performance within 10 calendar days and complete it within 540 calendar days after receiving [ ] award, [X] notice to proceed. This performance period is [ ] mandatory, [ ] negotiable. *(See _____ .)*

| 12 A. THE CONTRACTOR MUST FURNISH ANY REQUIRED PERFORMANCE AND PAYMENT BONDS? *(If "YES," indicate within how many calendar days after award in Item 12B.)* [X] YES [ ] NO | 12B. CALENDAR DAYS 10 |
|---|---|

13. ADDITIONAL SOLICITATION REQUIREMENTS:

A. Sealed offers in original and 3 copies to perform the work required are due at the place specified in Item 8 by 02:00 PM *(hour)* local time 13 Oct 2004 *(date).* If this is a sealed bid solicitation, offers must be publicly opened at that time. Sealed envelopes containing offers shall be marked to show the offeror's name and address, the solicitation number, and the date and time offers are due.

B. An offer guarantee [X] is, [ ] is not required.

C. All offers are subject to the (1) work requirements, and (2) other provisions and clauses incorporated in the solicitation in full text or by reference.

D. Offers providing less than 120 calendar days for Government acceptance after the date offers are due will not be considered and will be rejected.

## SOLICITATION, OFFER, AND AWARD (Continued)

*(Construction, Alteration, or Repair)*

**OFFER** ***(Must be fully completed by offeror)***

| 14. NAME AND ADDRESS OF OFFEROR *(Include ZIP Code)* | | 15. TELEPHONE NO. *(Include area code)* |
|---|---|---|
| | | 16. REMITTANCE ADDRESS *(Include only if different than Item 14)*<br><br>**See Item 14** |
| CODE | FACILITY CODE | |

17. The offeror agrees to perform the work required at the prices specified below in strict accordance with the terms of this solicitation, if this offer is accepted by the Government in writing within _____ calendar days after the date offers are due. *(Insert any number equal to or greater than the minimum requirements stated in Item 13D. Failure to insert any number means the offeror accepts the minimum in Item 13D.)*

| AMOUNTS | SEE SCHEDULE OF PRICES |
|---|---|

18. The offeror agrees to furnish any required performance and payment bonds.

19. ACKNOWLEDGMENT OF AMENDMENTS

*(The offeror acknowledges receipt of amendments to the solicitation -- give number and date of each)*

| AMENDMENT NO. | | | | | | | | | | |
|---|---|---|---|---|---|---|---|---|---|---|
| DATE | | | | | | | | | | |

| 20A. NAME AND TITLE OF PERSON AUTHORIZED TO SIGN OFFER *(Type or print)* | 20B. SIGNATURE | 20C. OFFER DATE |
|---|---|---|
| | | |

**AWARD** ***(To be completed by Government)***

21. ITEMS ACCEPTED:

| 22. AMOUNT | 23. ACCOUNTING AND APPROPRIATION DATA |
|---|---|
| | |

| 24. SUBMIT INVOICES TO ADDRESS SHOWN IN *(4 copies unless otherwise specified)* | **ITEM** | 25. OTHER THAN FULL AND OPEN COMPETITION PURSUANT TO<br>☐ 10 U.S.C. 2304(c) ☐ 41 U.S.C. 253(c) |
|---|---|---|
| 26. ADMINISTERED BY CODE | | 27. PAYMENT WILL BE MADE BY: CODE |

*CONTRACTING OFFICER WILL COMPLETE ITEM 28 OR 29 AS APPLICABLE*

| ☐ 28. NEGOTIATED AGREEMENT *(Contractor is required to sign this document and return _ _ copies to issuing office.)* Contractor agrees to furnish and deliver all items or perform all work, requisitions identified on this form and any continuation sheets for the consideration stated in this contract. The rights and obligations of the parties to this contract shall be governed by (a) this contract award, (b) the solicitation, and (c) the clauses, representations, certifications, and specifications or incorporated by reference in or attached to this contract. | | ☐ 29. AWARD *(Contractor is not required to sign this document.)* Your offer on this solicitation, is hereby accepted as to the items listed. This award consummates the contract, which consists of (a) the Government solicitation and your offer, and (b) this contract award. No further contractual document is necessary. | |
|---|---|---|---|
| 30A. NAME AND TITLE OF CONTRACTOR OR PERSON AUTHORIZED TO SIGN *(Type or print)* | | 31A. NAME OF CONTRACTING OFFICER *(Type or print)*<br><br>TEL: EMAIL: | |
| 30B. SIGNATURE | 30C. DATE | 31B. UNITED STATES OF AMERICA<br>BY | 31C. AWARD DATE |

Section 00010 - Solicitation Contract Form

| ITEM NO | SUPPLIES/SERVICES | QUANTITY | UNIT | UNIT PRICE | AMOUNT |
|---|---|---|---|---|---|
| 0001 | | 1 | Lump Sum | | |

BASE ITEMS - SCHEDULE I
FFP
All work completed for the Hydrant Fuel System, excluding Items 2 thru 0010.
PURCHASE REQUEST NUMBER: W26GLG-4197-3113

| ITEM NO | SUPPLIES/SERVICES | QUANTITY | UNIT | UNIT PRICE | AMOUNT |
|---|---|---|---|---|---|
| 0002 | | | | | |

FFP
Excavation, Stockpiling, Handling of Petroleum Contaminated Soil, Disposal (includes final testing for disposal)

| ITEM NO | SUPPLIES/SERVICES | QUANTITY | UNIT | UNIT PRICE | AMOUNT |
|---|---|---|---|---|---|
| 0002AA | | 30 | Ton Miles | | |

FFP
First 30 Tons

| ITEM NO | SUPPLIES/SERVICES | QUANTITY | UNIT | UNIT PRICE | AMOUNT |
|---|---|---|---|---|---|
| 0002AB | | 100 | Ton Miles | | |

FFP
For 30 - 100 Tons

| ITEM NO | SUPPLIES/SERVICES | QUANTITY | UNIT | UNIT PRICE | AMOUNT |
|---|---|---|---|---|---|
| 0002AC | | 1,400 | Ton Miles | | |

FFP
Over 100 Tons

| ITEM NO | SUPPLIES/SERVICES | QUANTITY | UNIT | UNIT PRICE | AMOUNT |
|---|---|---|---|---|---|
| 0003 | | | | | |

FFP
Removal, Storing, Handling of Petroleum Contaminated Water, Disposal (Includes Final Testing for Disposal).

| ITEM NO | SUPPLIES/SERVICES | QUANTITY | UNIT | UNIT PRICE | AMOUNT |
|---|---|---|---|---|---|
| 0003AA | | 10,000 | Gallon | | |
| | FFP<br>First 10,000 Gallons | | | | |

| ITEM NO | SUPPLIES/SERVICES | QUANTITY | UNIT | UNIT PRICE | AMOUNT |
|---|---|---|---|---|---|
| 0003AB | | 100,000 | Gallon | | |
| | FFP<br>For Over 10,000 - 100,000 gallons | | | | |

| ITEM NO | SUPPLIES/SERVICES | QUANTITY | UNIT | UNIT PRICE | AMOUNT |
|---|---|---|---|---|---|
| 0003AC | | 750,000 | Gallon | | |
| | FFP<br>Over 100,000 gallons | | | | |

TOTAL –SCH I _____

| ITEM NO | SUPPLIES/SERVICES | QUANTITY | UNIT | UNIT PRICE | AMOUNT |
|---|---|---|---|---|---|
| 0004 | OPTIONAL ITEMS - SCHEDULE II<br>FFP<br>Excavation, Stockpiling, Handling of Petroleum, contaminated soil, disposal (includes final testing for disposal). | | | | |

| ITEM NO | SUPPLIES/SERVICES | QUANTITY | UNIT | UNIT PRICE | AMOUNT |
|---|---|---|---|---|---|
| 0004AA | FFP<br>First 30 Tons. | 30 | Ton Miles | | |

| ITEM NO | SUPPLIES/SERVICES | QUANTITY | UNIT | UNIT PRICE | AMOUNT |
|---|---|---|---|---|---|
| 0004AB | FFP<br>30 - 100 Tons | 100 | Ton Miles | | |

| ITEM NO | SUPPLIES/SERVICES | QUANTITY | UNIT | UNIT PRICE | AMOUNT |
|---|---|---|---|---|---|
| 0004AC | FFP<br>Over 100 tons | 1,400 | Ton Miles | | |

| ITEM NO | SUPPLIES/SERVICES | QUANTITY | UNIT | UNIT PRICE | AMOUNT |
|---|---|---|---|---|---|
| 0005 | FFP<br>Removal, storing, handling of petroleum contaminated water, disposal (includes final testing for disposal). | | | | |

| ITEM NO | SUPPLIES/SERVICES | QUANTITY | UNIT | UNIT PRICE | AMOUNT |
|---|---|---|---|---|---|
| 0005AA | FFP<br>First 10,000 gallons | 10,000 | Gallon | | |

| ITEM NO | SUPPLIES/SERVICES | QUANTITY | UNIT | UNIT PRICE | AMOUNT |
|---|---|---|---|---|---|
| 0005AB | | 100,000 | Gallon | | |

FFP
Over 10,000 - 100,000 gallons

| ITEM NO | SUPPLIES/SERVICES | QUANTITY | UNIT | UNIT PRICE | AMOUNT |
|---|---|---|---|---|---|
| 0005AC | | 750,000 | Gallon | | |

FFP
Over 100,000 gallons

| ITEM NO | SUPPLIES/SERVICES | QUANTITY | UNIT | UNIT PRICE | AMOUNT |
|---|---|---|---|---|---|
| 0006 | | 1 | Lump Sum | | |

FFP
All work complete for Pantograph Parking Pad

| ITEM NO | SUPPLIES/SERVICES | QUANTITY | UNIT | UNIT PRICE | AMOUNT |
|---|---|---|---|---|---|
| 0007 | | 1 | Lump Sum | | |

FFP
All work complete for Pantograph canopy

| ITEM NO | SUPPLIES/SERVICES | QUANTITY | UNIT | UNIT PRICE | AMOUNT |
|---|---|---|---|---|---|
| 0008 | | 1 | Lump Sum | | |

FFP
All work complete for Hot Pit Parking Pavement

| ITEM NO | SUPPLIES/SERVICES | QUANTITY | UNIT | UNIT PRICE | AMOUNT |
|---|---|---|---|---|---|
| 0009 | | 1 | Lump Sum | | |

FFP
All work complete for removal of existing hydrant pits in west apron.

| ITEM NO | SUPPLIES/SERVICES | QUANTITY | UNIT | UNIT PRICE | AMOUNT |
|---|---|---|---|---|---|
| 0010 | | 1 | Each | | |
| | FFP<br>Wide range (60 ft) aircraft refueling pantograph, complete and delivered to the site. | | | | |

| ITEM NO | SUPPLIES/SERVICES | QUANTITY | UNIT | UNIT PRICE | AMOUNT |
|---|---|---|---|---|---|
| 0011 | | 2 | Each | | |
| | FFP<br>Wide range (60ft) aircraft refueling pantograph with high reach attachment, complete and delivered to the site. | | | | |

TOTAL – SCH II _____

TOTAL – SCH I + II __

EVALUATED TOTAL COST

**EVALUATION FACTORS**
(To be completed by bidder)

Includes total bid price for both Schedules I and II plus the following:

Performance Period in Calendar Days _____
(Offers should not exceed 540 calendar days.)

Overhead Rate _____%
(percent)

Extended Overhead $_____
(dollars/calendar day)

Calculations:
(ETC = **E**valuated **T**otal **C**ost)

ETC #1:

Total Proposal From Bid Schedule* $_____

ETC #2:

_____ X $2,731.00 X 75% = $_____
(performance period) (liquidated damages)

ETC #3:

_____ X _____ X 1.9% = $_____
(contract price*) (overhead rate)

ETC #4

_____ X _____ X 15.9%= $_____
(performance period) (extended overhead)

EVALUATED TOTAL COST + $_____
(Total of ETC 1 through ETC 4)

**NOTE**: Contract Price = For evaluation purposes, contract price is the total of all items 0001 through 0011. (The use of optional items may cause the contract award amount to be different.)

Bid Price = The total of Schedule I and II.

**INSTRUCTIONS TO BIDDERS**
**TOTAL EVALUATED COST**

NOTES:

1. Determination of award will be made on the basis of the "Evaluated Total Cost". The amount of award will be the contract price amount shown in Item 1.

2. The performance period shall be entered in the space provided and in Item 11 on page one (1) of Standard Form 1442. The bidder shall enter the shortest practicable construction period in calendar days that is required to perform the contract. Any working hour or other time constraint(s) shall be considered in determining the construction period. The overhead rate and extended overhead rate shall be entered in the spaces provided. See *"SPECIAL CLAUSES"* for definitions of the overhead and extended overhead rates. .

3. Bid prices must be entered for all items of the schedule. Additions and multiplications will be subject to verification by the Government. In case of variation between the individual prices and the evaluated cost total, the individual prices will be considered the bid.

   a. The formula in *Evaluation Factor 2* represents estimated Government costs of administration of the contract over the entire performance period.
   b. The formula in *Evaluation Factor 3* represents an estimate of the amount of home office overhead costs that the Government would pay the contractor for a hypothetical increase in contract due to modifications.
   c. The formula in *Evaluation Factor 4* represents an estimated amount of extended field office costs that the Government would pay for extending the contract performance period by a hypothetical number of days. Formulas for evaluation factors 2-4 include Government estimates of cost and time growth in order to derive an "Evaluated Total Cost" of the completed project. The estimates are based on historical information and shall not be construed as a limitation or guarantee of modifications to the contract.

4. Quantities for unit priced items are estimated only and the respective unit price will prevail in the event of an overrun or under-run subject to Contract Clause "Variation in Estimated Quantities".

5. A bid with an unreasonably short performance period may be subject for rejection.

6. A modification to a bid should state the application of the adjustment to every respective individual item affected. If the modification is not so applied, the single adjustment will be applied to the "Contract Price" amount and recalculated accordingly.

ADDITIONAL CLAUSES

**EXTENDED OVERHEAD DEFINITION (TOTAL EVALUATED COST)**

Extended overhead is defined as and shall include field office costs for all personnel, to include but not limited to, the project superintendent and clerical persons, all plant, all utilities, and all supplies which are related to an incurred on a time basis. The unit price ($/calendar day) inserted in the evaluation factors shall be used in determining amount to be applied to change orders or modifications for field overhead. Personnel, plant, utilities, and supplies referenced above shall not be bid or charged as direct costs on change orders and modifications. Further, the unit price stated shall be applied for each day the contract is extended, excluding time extensions granted under the Contract Clause entitled “Default (Fixed-price Construction)” and that this price represents the total amount to be applied for all field overhead including all subcontractors.

**OVERHEAD DEFINITION (TOTAL EVALUATED COST)**

Overhead is defined as all overhead costs other than extended overheard costs. Examples include, but are not limited to, general administrative home office costs and non-time related field office costs. The percentage for overhead inserted in the evaluation factors shall be used in determining the amount to be applied to all change orders or modifications. Further, the stated percentage, when applied to direct costs, represents the total amount of overhead payable, including any and all subcontractors.

Section 00100 - Bidding Schedule/Instructions to Bidders

CLAUSES INCORPORATED BY FULL TEXT

52.215-1 INSTRUCTIONS TO OFFERORS--COMPETITIVE ACQUISITION (JAN 2004)

(a) Definitions. As used in this provision--

“Discussions” are negotiations that occur after establishment of the competitive range that may, at the Contracting Officer's discretion, result in the offeror being allowed to revise its proposal.

“In writing or written” means any worded or numbered expression which can be read, reproduced, and later communicated, and includes electronically transmitted and stored information.

“Proposal modification” is a change made to a proposal before the solicitation's closing date and time, or made in response to an amendment, or made to correct a mistake at any time before award.

“Proposal revision” is a change to a proposal made after the solicitation closing date, at the request of or as allowed by a Contracting Officer as the result of negotiations.

“Time”, if stated as a number of days, is calculated using calendar days, unless otherwise specified, and will include Saturdays, Sundays, and legal holidays. However, if the last day falls on a Saturday, Sunday, or legal holiday, then the period shall include the next working day.

(b) Amendments to solicitations. If this solicitation is amended, all terms and conditions that are not amended remain unchanged. Offerors shall acknowledge receipt of any amendment to this solicitation by the date and time specified in the amendment(s).

(c) Submission, modification, revision, and withdrawal of proposals. (1) Unless other methods (e.g., electronic commerce or facsimile) are permitted in the solicitation, proposals and modifications to proposals shall be submitted in paper media in sealed envelopes or packages (i) addressed to the office specified in the solicitation, and (ii) showing the time and date specified for receipt, the solicitation number, and the name and address of the offeror. Offerors using commercial carriers should ensure that the proposal is marked on the outermost wrapper with the information in paragraphs (c)(1)(i) and (c)(1)(ii) of this provision.

(2) The first page of the proposal must show--

(i) The solicitation number;

(ii) The name, address, and telephone and facsimile numbers of the offeror (and electronic address if available);

(iii) A statement specifying the extent of agreement with all terms, conditions, and provisions included in the solicitation and agreement to furnish any or all items upon which prices are offered at the price set opposite each item;

(iv) Names, titles, and telephone and facsimile numbers (and electronic addresses if available) of persons authorized to negotiate on the offeror's behalf with the Government in connection with this solicitation; and

(v) Name, title, and signature of person authorized to sign the proposal. Proposals signed by an agent shall be accompanied by evidence of that agent's authority, unless that evidence has been previously furnished to the issuing office.

(3) Submission, modification, or revision, of proposals.

(i) Offerors are responsible for submitting proposals, and any modifications, or revisions, so as to reach the Government office designated in the solicitation by the time specified in the solicitation. If no time is specified in the solicitation, the time for receipt is 4:30 p.m., local time, for the designated Government office on the date that proposal or revision is due.

(ii)(A) Any proposal, modification, or revision received at the Government office designated in the solicitation after the exact time specified for receipt of offers is “late” and will not be considered unless it is received before award is made, the Contracting Officer determines that accepting the late offer would not unduly delay the acquisition; and--

(1) If it was transmitted through an electronic commerce method authorized by the solicitation, it was received at the initial point of entry to the Government infrastructure not later than 5:00 p.m. one working day prior to the date specified for receipt of proposals; or

(2) There is acceptable evidence to establish that it was received at the Government installation designated for receipt of offers and was under the Government's control prior to the time set for receipt of offers; or

(3) It is the only proposal received.

(B) However, a late modification of an otherwise successful proposal that makes its terms more favorable to the Government, will be considered at any time it is received and may be accepted.

(iii) Acceptable evidence to establish the time of receipt at the Government installation includes the time/date stamp of that installation on the proposal wrapper, other documentary evidence of receipt maintained by the installation, or oral testimony or statements of Government personnel.

(iv) If an emergency or unanticipated event interrupts normal Government processes so that proposals cannot be received at the office designated for receipt of proposals by the exact time specified in the solicitation, and urgent Government requirements preclude amendment of the solicitation, the time specified for receipt of proposals will be deemed to be extended to the same time of day specified in the solicitation on the first work day on which normal Government processes resume.

(v) Proposals may be withdrawn by written notice received at any time before award. Oral proposals in response to oral solicitations may be withdrawn orally. If the solicitation authorizes facsimile proposals, proposals may be withdrawn via facsimile received at any time before award, subject to the conditions specified in the provision at 52.215-5, Facsimile Proposals. Proposals may be withdrawn in person by an offeror or an authorized representative, if the identity of the person requesting withdrawal is established and the person signs a receipt for the proposal before award.

(4) Unless otherwise specified in the solicitation, the offeror may propose to provide any item or combination of items.

(5) Offerors shall submit proposals in response to this solicitation in English, unless otherwise permitted by the solicitation, and in U.S. dollars, unless the provision at FAR 52.225-17, Evaluation of Foreign Currency Offers, is included in the solicitation.

(6) Offerors may submit modifications to their proposals at any time before the solicitation closing date and time, and may submit modifications in response to an amendment, or to correct a mistake at any time before award.

(7) Offerors may submit revised proposals only if requested or allowed by the Contracting Officer.

(8) Proposals may be withdrawn at any time before award. Withdrawals are effective upon receipt of notice by the Contracting Officer.

(d) Offer expiration date. Proposals in response to this solicitation will be valid for the number of days specified on the solicitation cover sheet (unless a different period is proposed by the offeror).

(e) Restriction on disclosure and use of data. Offerors that include in their proposals data that they do not want disclosed to the public for any purpose, or used by the Government except for evaluation purposes, shall--

(1) Mark the title page with the following legend: This proposal includes data that shall not be disclosed outside the Government and shall not be duplicated, used, or disclosed--in whole or in part--for any purpose other than to evaluate this proposal. If, however, a contract is awarded to this offeror as a result of--or in connection with-- the submission of this data, the Government shall have the right to duplicate, use, or disclose the data to the extent provided in the resulting contract. This restriction does not limit the Government's right to use information contained in this data if it is obtained from another source without restriction. The data subject to this restriction are contained in sheets [insert numbers or other identification of sheets]; and

(2) Mark each sheet of data it wishes to restrict with the following legend: Use or disclosure of data contained on this sheet is subject to the restriction on the title page of this proposal.

(f) Contract award. (1) The Government intends to award a contract or contracts resulting from this solicitation to the responsible offeror(s) whose proposal(s) represents the best value after evaluation in accordance with the factors and subfactors in the solicitation.

(2) The Government may reject any or all proposals if such action is in the Government's interest.

(3) The Government may waive informalities and minor irregularities in proposals received.

(4) The Government intends to evaluate proposals and award a contract without discussions with offerors (except clarifications as described in FAR 15.306(a)). Therefore, the offeror's initial proposal should contain the offeror's best terms from a cost or price and technical standpoint. The Government reserves the right to conduct discussions if the Contracting Officer later determines them to be necessary. If the Contracting Officer determines that the number of proposals that would otherwise be in the competitive range exceeds the number at which an efficient competition can be conducted, the Contracting Officer may limit the number of proposals in the competitive range to the greatest number that will permit an efficient competition among the most highly rated proposals.

(5) The Government reserves the right to make an award on any item for a quantity less than the quantity offered, at the unit cost or prices offered, unless the offeror specifies otherwise in the proposal.

(6) The Government reserves the right to make multiple awards if, after considering the additional administrative costs, it is in the Government's best interest to do so.

(7) Exchanges with offerors after receipt of a proposal do not constitute a rejection or counteroffer by the Government.

(8) The Government may determine that a proposal is unacceptable if the prices proposed are materially unbalanced between line items or subline items. Unbalanced pricing exists when, despite an acceptable total evaluated price, the price of one or more contract line items is significantly overstated or understated as indicated by the application of cost or price analysis techniques. A proposal may be rejected if the Contracting Officer determines that the lack of balance poses an unacceptable risk to the Government.

(9) If a cost realism analysis is performed, cost realism may be considered by the source selection authority in evaluating performance or schedule risk.

(10) A written award or acceptance of proposal mailed or otherwise furnished to the successful offeror within the time specified in the proposal shall result in a binding contract without further action by either party.

(11) If a post-award debriefing is given to requesting offerors, the Government shall disclose the following information, if applicable:

(i) The agency's evaluation of the significant weak or deficient factors in the debriefed offeror's offer.

(ii) The overall evaluated cost or price and technical rating of the successful and the debriefed offeror and past performance information on the debriefed offeror.

(iii) The overall ranking of all offerors, when any ranking was developed by the agency during source selection.

(iv) A summary of the rationale for award.

(v) For acquisitions of commercial items, the make and model of the item to be delivered by the successful offeror.

(vi) Reasonable responses to relevant questions posed by the debriefed offeror as to whether source-selection procedures set forth in the solicitation, applicable regulations, and other applicable authorities were followed by the agency.

(End of provision)

52.215-20 REQUIREMENTS FOR COST OR PRICING DATA OR INFORMATION OTHER THAN COST OR PRICING DATA (OCT 1997)

(a) Exceptions from cost or pricing data. (1) In lieu of submitting cost or pricing data, offerors may submit a written request for exception by submitting the information described in the following subparagraphs. The Contracting Officer may require additional supporting information, but only to the extent necessary to determine whether an exception should be granted, and whether the price is fair and reasonable.

(i) Identification of the law or regulation establishing the price offered. If the price is controlled under law by periodic rulings, reviews, or similar actions of a governmental body, attach a copy of the controlling document, unless it was previously submitted to the contracting office.

(ii) Commercial item exception. For a commercial item exception, the offeror shall submit, at a minimum, information on prices at which the same item or similar items have previously been sold in the commercial market that is adequate for evaluating the reasonableness of the price for this acquisition. Such information may include--

(A) For catalog items, a copy of or identification of the catalog and its date, or the appropriate pages for the offered items, or a statement that the catalog is on file in the buying office to which the proposal is being submitted. Provide a copy or describe current discount policies and price lists (published or unpublished), e.g., wholesale, original equipment manufacturer, or reseller. Also explain the basis of each offered price and its relationship to the established catalog price, including how the proposed price relates to the price of recent sales in quantities similar to the proposed quantities;

(B) For market-priced items, the source and date or period of the market quotation or other basis for market price, the base amount, and applicable discounts. In addition, describe the nature of the market;

(C) For items included on an active Federal Supply Service Multiple Award Schedule contract, proof that an exception has been granted for the schedule item.

(2) The offeror grants the Contracting Officer or an authorized representative the right to examine, at any time before award, books, records, documents, or other directly pertinent records to verify any request for an exception

under this provision, and the reasonableness of price. For items priced using catalog or market prices, or law or regulation , access does not extend to cost or profit information or other data relevant solely to the offeror's determination of the prices to be offered in the catalog or marketplace.

(b) Requirements for cost or pricing data. If the offeror is not granted an exception from the requirement to submit cost or pricing data, the following applies:

(1) The offeror shall prepare and submit cost or pricing data and supporting attachments in accordance with Table 15-2 of FAR 15.408.

As soon as practicable after agreement on price, but before contract award (except for unpriced actions such as letter contracts), the offeror shall submit a Certificate of Current Cost or Pricing Data, as prescribed by FAR 15.406-2.

(End of provision)

52.216-1 TYPE OF CONTRACT (APR 1984)

The Government contemplates award of a firm fixed price contract resulting from this solicitation.

(End of clause)

52.217-5 EVALUATION OF OPTIONS (JUL 1990)

Except when it is determined in accordance with FAR 17.206(b) not to be in the Government's best interests, the Government will evaluate offers for award purposes by adding the total price for all options to the total price for the basic requirement. Evaluation of options will not obligate the Government to exercise the option(s).

(End of provision)

52.222-23 NOTICE OF REQUIREMENT FOR AFFIRMATIVE ACTION TO ENSURE EQUAL EMPLOYMENT OPPORTUNITY FOR CONSTRUCTION (FEB 1999)

(a) The offeror's attention is called to the Equal Opportunity clause and the Affirmative Action Compliance Requirements for Construction clause of this solicitation.

(b) The goals for minority and female participation, expressed in percentage terms for the Contractor's aggregate workforce in each trade on all construction work in the covered area, are as follows:

| Goals for minority participation for each trade | Goals for female participation for each trade |
|---|---|
| 27.1% | 6.9% |

These goals are applicable to all the Contractor's construction work performed in the covered area. If the Contractor performs construction work in a geographical area located outside of the covered area, the Contractor shall apply the goals established for the geographical area where the work is actually performed. Goals are published periodically in the Federal Register in notice form, and these notices may be obtained from any Office of Federal Contract Compliance Programs office.

(c) The Contractor's compliance with Executive Order 11246, as amended, and the regulations in 41 CFR 60-4 shall be based on (1) its implementation of the Equal Opportunity clause, (2) specific affirmative action obligations required by the clause entitled "Affirmative Action Compliance Requirements for Construction," and (3) its efforts to meet the goals. The hours of minority and female employment and training must be substantially uniform throughout the length of the contract, and in each trade. The Contractor shall make a good faith effort to employ minorities and women evenly on each of its projects. The transfer of minority or female employees or trainees from Contractor to Contractor, or from project to project, for the sole purpose of meeting the Contractor's goals shall be a violation of the contract, Executive Order 11246, as amended, and the regulations in 41 CFR 60-4. Compliance with the goals will be measured against the total work hours performed.

(d) The Contractor shall provide written notification to the Deputy Assistant Secretary for Federal Contract Compliance, U.S. Department of Labor, within 10 working days following award of any construction subcontract in excess of $10,000 at any tier for construction work under the contract resulting from this solicitation. The notification shall list the --

(1) Name, address, and telephone number of the subcontractor;

(2) Employer's identification number of the subcontractor;

(3) Estimated dollar amount of the subcontract;

(4) Estimated starting and completion dates of the subcontract; and

(5) Geographical area in which the subcontract is to be performed.

(e) As used in this Notice, and in any contract resulting from this solicitation, the "covered area" is Langley Air Force Base, VA.

(End of provision)

52.225-12 NOTICE OF BUY AMERICAN ACT REQUIREMENT-- CONSTRUCTION MATERIALS (JAN 2004) - ALTERNATE I (MAY 2002)

(a) Definitions. Construction material, designated country construction material, domestic construction material, foreign construction material, and FTA country construction material, as used in this provision, are defined in the clause of this solicitation entitled “Buy American Act--Balance--Construction Materials under Trade Agreements” (Federal Acquisition Regulation (FAR) clause 52.225-11).

(b) Requests for determination of inapplicability. An offeror requesting a determination regarding the inapplicability of the Buy American Act or Balance shall submit the request with its offer, including the information and applicable supporting data required by paragraphs (c) and (d) of FAR clause 52.225-11.

(c) Evaluation of offers. (1) The Government will evaluate an offer requesting exception to the requirements of the Buy American Act, based on claimed unreasonable cost of domestic construction materials, by adding to the offered price the appropriate percentage of the cost of such foreign construction material, as specified in paragraph (b)(4)(i) of FAR clause 52.225-11.

(2) If evaluation results in a tie between an offeror that requested the substitution of foreign construction material based on unreasonable cost and an offeror that did not request an exception, the Contracting Officer will award to the offeror that did not request an exception based on unreasonable cost.

(d) Alternate offers. (1) When an offer includes foreign construction material, other than designated country or FTA country construction material, that is not listed by the Government in this solicitation in paragraph (b)(3) of FAR clause 52.225-11, the offeror also may submit an alternate offer based on use of equivalent domestic, designated country, or FTA country construction material.

(2) If an alternate offer is submitted, the offeror shall submit a separate Standard Form 1442 for the alternate offer, and a separate price comparison table prepared in accordance with paragraphs (c) and (d) of FAR clause 52.225-11 for the offer that is based on the use of any foreign construction material for which the Government has not yet determined an exception applies.

(3) If the Government determines that a particular exception requested in accordance with paragraph (c) of FAR clause 52.225-11 does not apply, the Government will evaluate only those offers based on use of the equivalent domestic, designated country, or FTA country construction material, and the offeror shall be required to furnish such domestic, designated country, or FTA country construction material. An offer based on use of the foreign construction material for which an exception was requested--

(i) Will be rejected as nonresponsive if this acquisition is conducted by sealed bidding; or

(ii) May be accepted if revised during negotiations.

(End of provision)

52.233-2 SERVICE OF PROTEST (AUG 1996)

(a) Protests, as defined in section 33.101 of the Federal Acquisition Regulation, that are filed directly with an agency, and copies of any protests that are filed with the General Accounting Office (GAO), shall be served on the Contracting Officer (addressed as follows) by obtaining written and dated acknowledgment of receipt from Chief, Contracting Office, U.S. Army Engineer District, Norfolk, ATTN: CENAO-BR-C, 803 Front Street, Norfolk, VA 23510-1096.

(b) The copy of any protest shall be received in the office designated above within one day of filing a protest with the GAO.

(End of provision)

52.236-27 SITE VISIT (CONSTRUCTION) (FEB 1995)

(a) The clauses at 52.236-2, Differing Site Conditions, and 52.236-3, Site Investigations and Conditions Affecting the Work, will be included in any contract awarded as a result of this solicitation. Accordingly, offerors or quoters are urged and expected to inspect the site where the work will be performed.

(b) Site visits may be arranged during normal duty hours by contacting:

Name: Brian Boynton
Address: Langley Air Force Base, VA
Telephone: 757-225-4053

(End of provision)

52.252-5 AUTHORIZED DEVIATIONS IN PROVISIONS (APR 1984)

(a) The use in this solicitation of any Federal Acquisition Regulation (48 CFR Chapter 1) provision with an authorized deviation is indicated by the addition of"(DEVIATION)" after the date of the provision.

(iv) The use in this solicitation of any _____ (48 CFR Chapter _____) provision with an authorized deviation is indicated by the addition of "(DEVIATION)" after the name of the regulation.

(End of provision)

252.204-7001 COMMERCIAL AND GOVERNMENT ENTITY (CAGE) CODE REPORTING (AUG 1999)

(a) The offeror is requested to enter its CAGE code on its offer in the block with its name and address. The CAGE code entered must be for that name and address. Enter “CAGE” before the number.

(b) If the offeror does not have a CAGE code, it may ask the Contracting Officer to request one from the Defense Logistics Information Service (DLIS). The Contracting Officer will--

(1) Ask the Contractor to complete section B of a DD Form 2051, Request for Assignment of a Commercial and Government Entity (CAGE) Code;

(2) Complete section A and forward the form to DLIS; and

(3) Notify the Contractor of its assigned CAGE code.

(c) Do not delay submission of the offer pending receipt of a CAGE code.

(End of provision)

E4LC02 AWARD TO RESPONSIBLE OFFEROR

Responsibility will be determined, prior to award, by the Contracting Officer, either by performing a pre-award survey or conclusions based on a previous pre-award survey and/or any performance data available. A pre-award survey will be performed and the offeror will be required to show that he has the necessary capital, experience, and owns or can procure the necessary plant or other resources to commence the work at the time prescribed in the specifications and thereafter to prosecute and complete the work safely and satisfactorily within the time specified.

E4LC04 EVIDENCE OF AUTHORITY TO SIGN OFFERS

Evidence of the authority of individuals signing offers to submit firm offers on behalf of the offeror is required except where the offer is signed, and shows that it is so signed, by: the President, Vice-President, or Secretary of an incorporated offeror; a partner in the case of a partnership; or the owner in the case of a sole proprietorship. Failure to submit with the offer satisfactory evidence of the authority of all other persons may be cause for rejection of the offer as invalid or nonresponsive.

E4LC05 PREAWARD SAFETY CONFERENCE

a. Where an apparent low bidder, in performance of contracts during the previous three-year period, incurred one or more accidents, or where, in the opinion of the Contracting Officer, there is any question regarding this compliance with any safety or accident prevention requirement, such bidder, on request of the Contracting Officer prior to any award under this solicitation, shall attend a conference with representatives of the Contracting Officer to discuss any such accidents or non-compliance, the reason for their occurrence, and measures which will be taken to preclude any recurrence thereof.

b. Information elicited at this conference will be used by the Contracting Officer, in conjunction with other information obtained in a preaward survey, in determining the bidder's responsibility.

c. The items discussed, the preventive measures considered, and any conclusions reached in this conference shall be recorded in minutes of the meeting, which shall be authenticated by the signatures of representatives of the bidder and the Contracting Officer, and any procedures noted therein as agreed upon shall become an obligation of the bidder, along with all other safety and accident prevention requirements of the contract, if award is made to him.

E4LC06 INSPECTION OF THE SITE

Prospective bidders are invited to visit the site of the work in order to acquaint themselves as to site conditions and other problems incident to the prosecution of the work. Arrangements for inspection of the site shall be made through the Office the Area Engineer identified in the clause 52.236-27, entitled "SITE VISIT (CONSTRUCTION)."

E4LC07 SUBCONTRACTING PLAN (CONSTRUCTION)

If the offeror is a large business and the offer amount exceeds $1,000,000.00, he shall submit a subcontracting plan within three (3) working days of being notified (either verbally or in writing) that he is the apparent low bidder or is otherwise in line for award. The subcontracting plan shall be reviewed and approved by the Contracting Officer prior to award.

E4LC08 MAGNITUDE OF CONSTRUCTION PROJECT

The estimated contract price of the work for this project is estimated to be over $10,000,000.00.

E4LC09 BASIS OF AWARD

All blanks must be filled in by the bidder. A single award will be made to the lowest responsible, responsive bidder on the basis of the total price bid. Prior to making an award, a pre-award survey will be made and the low bidder will be required to show that he has the necessary capital, experience, and owns or can procure the necessary plant to commence the work at the time prescribed in the specifications and thereafter to prosecute and complete the work safely and satisfactorily within the time specified.

E4LC10 UNBALANCED OFFERS

Any offer which is materially unbalanced as to prices for the Base Items and the Optional Items may be rejected as non-responsive or otherwise not considered for award. An unbalanced offer is one which is based on prices significantly less than cost for some work and prices which are significantly overstated for other work.

E4LC13 PERFORMANCE OF WORK BY CONTRACTOR

Offeror's attention is directed to FAR 52.236-1, "Performance of Work by Contractor." Contractor is required to furnish a description of the work which will be performed by his own organization, (e.g., earthwork, paving, etc.), the percentage of the total work this represents, and the estimated cost thereof. Such description of work to be performed by the contractor's own organization shall be provided to the Contracting Officer within 10 days of contract award.

E4LC23 INCURRING COSTS

The Government is not liable for any costs incurred by the offeror submitting an offer in response to this solicitation.

E4LC27 REQUIREMENT FOR "PAYMENT AND PERFORMANCE BONDS" OR "PAYMENT BONDS ONLY"

If the resulting contract is awarded for an amount in excess of $100,000, the contractor shall be required to provide both payment and performance bonds in accordance with FAR 52.228-15, "Performance and Payment Bonds--Construction." FAR 52.228-15 applies only to those contracts awarded for an amount in excess of $100,000.

If the resulting contract is awarded for an amount in excess of $25,000 but no more than $100,000, the contractor shall not be required to provide a performance bond. The required payment bond shall be provided in accordance with FAR 52.228-13, "Alternative Payment Protections." FAR 52.228-13 applies only to those contracts awarded for an amount in excess of $25,000 by no more than $100,000. Neither payment nor performance bonds are required for contracts awarded for an amount less than $25,000.

E4LC58 BID GUARANTEE (SEP 1996)

(a) Failure to furnish a bid guarantee in the proper form and amount, by the time set for opening of bids, may be cause for rejection of the bid.

(b) The bidder shall furnish a bid guarantee in the form of a firm commitment, e.g., bid bond supported by good and sufficient surety or sureties acceptable to the Government, postal money order, certified check, cashier's check, irrevocable letter of credit, or, under Treasury Department regulations, certain bonds or notes of the United States. The Contracting Officer will return bid guarantees, other than bid bonds, (1) to unsuccessful bidders as soon as practicable after the opening of bids, and (2) to the successful bidder upon execution of contractual documents and bonds (including any necessary coinsurance or reinsurance agreements), as required by the bid as accepted.

(c) The amount of the bid guarantee shall be 20 percent of the bid price or $3,000,000, whichever is less.

(d) If the successful bidder, upon acceptance of its bid by the Government within the period specified for acceptance, fails to execute all contractual documents or furnish executed bond(s) within 10 days after receipt of the forms by the bidder, the Contracting Officer may terminate the contract for default.

(e) In the event the contract is terminated for default, the bidder is liable for any cost of acquiring the work that exceeds the amount of its bid, and the bid guarantee is available to offset the difference.

(End of provision)

CLAUSES INCORPORATED BY FULL TEXT

52.203-2 CERTIFICATE OF INDEPENDENT PRICE DETERMINATION (APR 1985)

(a) The offeror certifies that --

(1) The prices in this offer have been arrived at independently, without, for the purpose of restricting competition, any consultation, communication, or agreement with any other offeror or competitor relating to –

(i) Those prices,

(ii) The intention to submit an offer, or

(iii) The methods of factors used to calculate the prices offered:

(2) The prices in this offer have not been and will not be knowingly disclosed by the offeror, directly or indirectly, to any other offeror or competitor before bid opening (in the case of a sealed bid solicitation) or contract award (in the case of a negotiated solicitation) unless otherwise required by law; and

(3) No attempt has been made or will be made by the offeror to induce any other concern to submit or not to submit an offer for the purpose of restricting competition.

(b) Each signature on the offer is considered to be a certification by the signatory that the signatory --

(1) Is the person in the offeror's organization responsible for determining the prices offered in this bid or proposal, and that the signatory has not participated and will not participate in any action contrary to subparagraphs (a)(1) through (a)(3) of this provision; or

(2) (i) Has been authorized, in writing, to act as agent for the following principals in certifying that those principals have not participated, and will not participate in any action contrary to subparagraphs (a)(1) through (a)(3) of this provison _____ (insert full name of person(s) in the offeror's organization responsible for determining the prices offered in this bid or proposal, and the title of his or her position in the offeror's organization);

(ii) As an authorized agent, does certify that the principals named in subdivision (b)(2)(i) above have not participated, and will not participate, in any action contrary to subparagraphs (a)(1) through (a)(3) above; and

(iii) As an agent, has not personally participated, and will not participate, in any action contrary to subparagraphs (a)(1) through (a)(3) of this provision.

(c) If the offeror deletes or modifies subparagraph (a)(2) of this provision, the offeror must furnish with its offer a signed statement setting forth in detail the circumstances of the disclosure.

(End of clause)

52.203-11 CERTIFICATION AND DISCLOSURE REGARDING PAYMENTS TO INFLUENCE CERTAIN FEDERAL TRANSACTIONS (APR 1991)

(a) The definitions and prohibitions contained in the clause, at FAR 52.203-12, Limitation on Payments to Influence

Certain Federal Transactions, included in this solicitation, are hereby incorporated by reference in paragraph (b) of this Certification.

(b) The offeror, by signing its offer, hereby certifies to the best of his or her knowledge and belief that on or after December 23, 1989,--

(1) No Federal appropriated funds have been paid or will be paid to any person for influencing or attempting to influence an officer or employee of any agency, a Member of Congress, an officer or employee of Congress, or an employee of a Member of Congress on his or her behalf in connection with the awarding of any Federal contract, the making of any Federal grant, the making of any Federal loan, the entering into of any cooperative agreement, and the extension, continuation, renewal, amendment or modification of any Federal contract, grant, loan, or cooperative agreement;

(2) If any funds other than Federal appropriated funds (including profit or fee received under a covered Federal transaction) have been paid, or will be paid to any person for influencing or attempting to influence an officer or employee of any agency, a Member of Congress, an officer or employee of Congress or an employee of a Member of Congress on his or her behalf in connection with this solicitation, the offeror shall complete and submit, with its offer, OMB standard form LLL, Disclosure of Lobbying Activities, to the Contracting Officer; and

(3) He or she will include the language of this certification in all subcontract awards at any tier and require that all recipients of subcontract awards in excess of $100,000 shall certify and disclose accordingly.

(v) Submission of this certification and disclosure is a prerequisite for making or entering into this contract imposed by section 1352, title 31, United States Code. Any person who makes an expenditure prohibited under this provision, shall be subject to a civil penalty of not less than $10,000, and not more than $100,000, for each such failure.

(End of provision)

52.204-3 TAXPAYER IDENTIFICATION (OCT 1998)

(a) Definitions.

“Common parent,” as used in this provision, means that corporate entity that owns or controls an affiliated group of corporations that files its Federal income tax returns on a consolidated basis, and of which the offeror is a member.

“Taxpayer Identification Number (TIN),” as used in this provision, means the number required by the Internal Revenue Service (IRS) to be used by the offeror in reporting income tax and other returns. The TIN may be either a Social Security Number or an Employer Identification Number.

(b) All offerors must submit the information required in paragraphs (d) through (f) of this provision to comply with debt collection requirements of 31 U.S.C. 7701(c) and 3325(d), reporting requirements of 26 U.S.C. 6041, 6041A, and 6050M, and implementing regulations issued by the IRS. If the resulting contract is subject to the payment reporting requirements described in Federal Acquisition Regulation (FAR) 4.904, the failure or refusal by the offeror to furnish the information may result in a 31 percent reduction of payments otherwise due under the contract.

(c) The TIN may be used by the Government to collect and report on any delinquent amounts arising out of the offeror's relationship with the Government (31 U.S.C. 7701(c)(3)). If the resulting contract is subject to the payment reporting requirements described in FAR 4.904, the TIN provided hereunder may be matched with IRS records to verify the accuracy of the offeror's TIN.

(d) Taxpayer Identification Number (TIN).

___ TIN:._____

___ TIN has been applied for.

___ TIN is not required because:

___ Offeror is a nonresident alien, foreign corporation, or foreign partnership that does not have income effectively connected with the conduct of a trade or business in the United States and does not have an office or place of business or a fiscal paying agent in the United States;

___ Offeror is an agency or instrumentality of a foreign government;

___ Offeror is an agency or instrumentality of the Federal Government.

(e) Type of organization.

___ Sole proprietorship;

___ Partnership;

___ Corporate entity (not tax-exempt);

___ Corporate entity (tax-exempt);

___ Government entity (Federal, State, or local);

___ Foreign government;

___ International organization per 26 CFR 1.6049-4;

___ Other _____

(f) Common parent.

___ Offeror is not owned or controlled by a common parent as defined in paragraph (a) of this provision.

___ Name and TIN of common parent:

Name _____

TIN _____

(End of provision)

52.204-5 WOMEN-OWNED BUSINESS (OTHER THAN SMALL BUSINESS) (MAY 1999)

(a) Definition. Women-owned business concern, as used in this provision, means a concern that is at least 51 percent owned by one or more women; or in the case of any publicly owned business, at least 51 percent of its stock is owned by one or more women; and whose management and daily business operations are controlled by one or more women.

(b) Representation. [Complete only if the offeror is a women-owned business concern and has not represented itself as a small business concern in paragraph (b)(1) of FAR 52.219-1, Small Business Program Representations, of this solicitation.] The offeror represents that it ( ) is a women-owned business concern.

(End of provision)

52.209-5 CERTIFICATION REGARDING DEBARMENT, SUSPENSION, PROPOSED DEBARMENT, AND OTHER RESPONSIBILITY MATTERS (DEC 2001)

(a)(1) The Offeror certifies, to the best of its knowledge and belief, that-

(i) The Offeror and/or any of its Principals-

(A) Are ( ) are not ( ) presently debarred, suspended, proposed for debarment, or declared ineligible for the award of contracts by any Federal agency;

(B) Have ( ) have not ( ), within a three-year period preceding this offer, been convicted of or had a civil judgment rendered against them for: commission of fraud or a criminal offense in connection with obtaining, attempting to obtain, or performing a public (Federal, state, or local) contract or subcontract; violation of Federal or state antitrust statutes relating to the submission of offers; or commission of embezzlement, theft, forgery, bribery, falsification or destruction of records, making false statements, tax evasion, or receiving stolen property; and

(C) Are ( ) are not ( ) presently indicted for, or otherwise criminally or civilly charged by a governmental entity with, commission of any of the offenses enumerated in paragraph (a)(1)(i)(B) of this provision.

(ii) The Offeror has ( ) has not ( ), within a three-year period preceding this offer, had one or more contracts terminated for default by any Federal agency.

(2) "Principals," for the purposes of this certification, means officers; directors; owners; partners; and, persons having primary management or supervisory responsibilities within a business entity (e.g., general manager; plant manager; head of a subsidiary, division, or business segment, and similar positions).

This Certification Concerns a Matter Within the Jurisdiction of an Agency of the United States and the Making of a False, Fictitious, or Fraudulent Certification May Render the Maker Subject to Prosecution Under Section 1001, Title 18, United States Code.

(b) The Offeror shall provide immediate written notice to the Contracting Officer if, at any time prior to contract award, the Offeror learns that its certification was erroneous when submitted or has become erroneous by reason of changed circumstances.

(c) A certification that any of the items in paragraph (a) of this provision exists will not necessarily result in withholding of an award under this solicitation. However, the certification will be considered in connection with a determination of the Offeror's responsibility. Failure of the Offeror to furnish a certification or provide such additional information as requested by the Contracting Officer may render the Offeror nonresponsible.

(d) Nothing contained in the foregoing shall be construed to require establishment of a system of records in order to render, in good faith, the certification required by paragraph (a) of this provision. The knowledge and information of an Offeror is not required to exceed that which is normally possessed by a prudent person in the ordinary course of business dealings.

(e) The certification in paragraph (a) of this provision is a material representation of fact upon which reliance was placed when making award. If it is later determined that the Offeror knowingly rendered an erroneous certification,

in addition to other remedies available to the Government, the Contracting Officer may terminate the contract resulting from this solicitation for default.

(End of provision)

ADDITIONAL SMALL BUSINESS SIZE STANDARD INFORMATION FOR DREDGING

(a) FAR 52.219-1, SMALL BUSINESS PROGRAM REPRESENTATION, PROVIDES THE NAICS CODE AND SMALL BUSINESS SIZE STANDARD FOR DREDGING.
(b) ADDITIONALLY, TO BE CONSIDERED SMALL, A FIRM MUST PERFORM AT LEAST 40% OF THE YARDAGE WITH ITS OWN DREDGING EQUIPMENT OR EQUIPMENT OWNED BY ANOTHER SMALL DREDGING FIRM.

52.219-19 SMALL BUSINESS CONCERN REPRESENTATION FOR THE SMALL BUSINESS COMPETITIVENESS DEMONSTRATION PROGRAM (OCT 2000)

(a) Definition.

"Emerging small business" as used in this solicitation, means a small business concern whose size is no greater than 50 percent of the numerical size standard applicable to the North American Industry Classification System (NAICS) code assigned to a contracting opportunity.

(b) [Complete only if the Offeror has represented itself under the provision at 52.219-1 as a small business concern under the size standards of this solicitation.] The Offeror [ ] is, [ ] is not an emerging small business.

(c) (Complete only if the Offeror is a small business or an emerging small business, indicating its size range.)

Offeror's number of employees for the past 12 months (check this column if size standard stated in solicitation is expressed in terms of number of employees) or Offeror's average annual gross revenue for the last 3 fiscal years (check this column if size standard stated in solicitation is expressed in terms of annual receipts). (Check one of the following.)

| No. of Employees | Avg. Annual Gross Revenues |
|---|---|
| ____ 50 or fewer | ____ $1 million or less |
| ____ 51 - 100 | ____ $1,000,001 - $2 million |
| ____ 101 - 250 | ____ $2,000,001 - $3.5 million |
| ____ 251 - 500 | ____ $3,500,001 - $5 million |
| ____ 501 - 750 | ____ $5,000,001 - $10 million |
| ____ 751 - 1,000 | ____ $10,000,001 - $17 million |
| ____ Over 1,000 | ____ Over $17 million |

(End of provision)

52.222-21 PROHIBITION OF SEGREGATED FACILITIES (FEB 1999)

(a) Segregated facilities, as used in this clause, means any waiting rooms, work areas, rest rooms and wash rooms, restaurants and other eating areas, time clocks, locker rooms and other storage or dressing areas, parking lots, drinking fountains, recreation or entertainment areas, transportation, and housing facilities provided for employees, that are segregated by explicit directive or are in fact segregated on the basis of race, color, religion, sex, or national origin because of written or oral policies or employee custom. The term does not include separate or single-user rest rooms or necessary dressing or sleeping areas provided to assure privacy between the sexes.

(b) The Contractor agrees that it does not and will not maintain or provide for its employees any segregated facilities at any of its establishments, and that it does not and will not permit its employees to perform their services at any location under its control where segregated facilities are maintained. The Contractor agrees that a breach of this clause is a violation of the Equal Opportunity clause in this contract.

(c) The Contractor shall include this clause in every subcontract and purchase order that is subject to the Equal Opportunity clause of this contract.

(End of clause)

52.222-22 PREVIOUS CONTRACTS AND COMPLIANCE REPORTS (FEB 1999)

The offeror represents that --

(a) ( ) It has, ( ) has not participated in a previous contract or subcontract subject to the Equal Opportunity clause of this solicitation;

(b) ( ) It has, ( ) has not, filed all required compliance reports; and

(c) Representations indicating submission of required compliance reports, signed by proposed subcontractors, will be obtained before subcontract awards.

(End of provision)

252.209-7001 DISCLOSURE OF OWNERSHIP OR CONTROL BY THE GOVERNMENT OF A TERRORIST COUNTRY (MAR 1998)

(a) "Definitions."

As used in this provision --

(a) "Government of a terrorist country" includes the state and the government of a terrorist country, as well as any political subdivision, agency, or instrumentality thereof.

(2) "Terrorist country" means a country determined by the Secretary of State, under section 6(j)(1)(A) of the Export Administration Act of 1979 (50 U.S.C. App. 2405(j)(i)(A)), to be a country the government of which has repeatedly provided support for such acts of international terrorism. As of the date of this provision, terrorist countries include: Cuba, Iran, Iraq, Libya, North Korea, Sudan, and Syria.

(3) "Significant interest" means --

(i) Ownership of or beneficial interest in 5 percent or more of the firm's or subsidiary's securities. Beneficial interest includes holding 5 percent or more of any class of the firm's securities in "nominee shares," "street names," or some other method of holding securities that does not disclose the beneficial owner;

(ii) Holding a management position in the firm, such as a director or officer;

(iii) Ability to control or influence the election, appointment, or tenure of directors or officers in the firm;

(iv) Ownership of 10 percent or more of the assets of a firm such as equipment, buildings, real estate, or other tangible assets of the firm; or

(v) Holding 50 percent or more of the indebtness of a firm.

(b) "Prohibition on award."

In accordance with 10 U.S.C. 2327, no contract may be awarded to a firm or a subsidiary of a firm if the government of a terrorist country has a significant interest in the firm or subsidiary or, in the case of a subsidiary, the firm that owns the subsidiary, unless a waiver is granted by the Secretary of Defense.

(c) "Disclosure."

If the government of a terrorist country has a significant interest in the Offeror or a subsidiary of the Offeror, the Offeror shall disclosure such interest in an attachment to its offer. If the Offeror is a subsidiary, it shall also disclose any significant interest the government of a terrorist country has in any firm that owns or controls the subsidiary. The disclosure shall include --

(1) Identification of each government holding a significant interest; and

(2) A description of the significant interest held by each government.

(End of provision)

252.236-7010 OVERSEAS MILITARY CONSTRUCTION-PREFERENCE FOR UNITED STATES FIRMS (JAN 1997)

(a)Definition.

"United States firm," as used in this provision, means a firm incorporated in the United States that complies with the following:

(1)The corporate headquarters are in the United States;

(2)The firm has filed corporate and employment tax returns in the United States for a minimum of 2 years (if required), has filed State and Federal income tax returns (if required) for 2 years, and has paid any taxes due as a result of these filings; and

(3)The firm employs United States citizens in key management positions.

(b)Evaluation. Offers from firms that do not qualify as United States firms will be evaluated by adding 20 percent to the offer.

(c)Status. The offeror ____ is, _____is not a United States firm.

252.247-7022 REPRESENTATION OF EXTENT OF TRANSPORTATION BY SEA (AUG 1992)

(a) The Offeror shall indicate by checking the appropriate blank in paragraph (b) of this provision whether transportation of supplies by sea is anticipated under the resultant contract. The term supplies is defined in the Transportation of Supplies by Sea clause of this solicitation.

(b) Representation. The Offeror represents that it:

____ (1) Does anticipate that supplies will be transported by sea in the performance of any contract or subcontract resulting from this solicitation.

____ (2) Does not anticipate that supplies will be transported by sea in the performance of any contract or subcontract resulting from this solicitation.

(c) Any contract resulting from this solicitation will include the Transportation of Supplies by Sea clause. If the Offeror represents that it will not use ocean transportation, the resulting contract will also include the Defense FAR Supplement clause at 252.247-7024, Notification of Transportation of Supplies by Sea.

(End of provision)

E4LC01 CORPORATE CERTIFICATE

Note: Contractor, if a corporation, should cause the following certificate to be executed under its corporate seal, provided that the same officer shall not execute both the contract and the certificate.

CERTIFICATE

I, _____, certify that I am

_____ of the corporation named as Contractor herein, that

_____, was then the _____ of said

corporation; that said contract was duly signed for and in behalf of said corporation of authority

of its governing body, and is within the scope of its corporate powers.

_____
(Name of Corporation)

_____
(Signature)

(Corporate Seal)

NOTE: A CORPORATE OFFICER OTHER THAN THE OFFICER SIGNING THE SOLICITATION MUST FILL OUT AND SIGN THIS FORM.

E4LC01B CERTIFICATE OF AUTHORITY

The undersigned:
_____
(Names of Partners)

do hereby certify that they are the individual partners who comprise the partnership of

_____
(Name of Partnership)

which firm has its office at
_____
(Address of Partnership)

that _____, one of the said partners, is hereby
(Name of Partner)

authorized to sign contracts between said partnership and the United States Government

and any modifications of such contracts on behalf of and in the name of the said

partnership.

In witness whereof the undersigned have executed this instrument this

_____ day of _____ 19___.

WITNESSES:

Name Address

(1) _____ _____

_____

(Partner)

(2) _____ _____

(1) _____ _____

_____

(Partner)

(2) _____ _____

(1) _____ _____

_____

(Partner)

(2) _____ _____

NOTE: 2 WITNESSES FOR EACH SIGNATURE

E4LC17 COMMERCIAL AND GOVERNMENT ENTITY (CAGE) CODE REPORTING

(a) The Offeror is requested to enter its CAGE code in the space provided below. The CAGE code entered must be for that name and address.

(b) If the Offeror does not have a CAGE code, it may ask the Contracting Officer to request one in accordance with the provisions of DFARS 52.204-7001 in the section of this solicitation entitled "Instructions to Bidders."

(c) Do not delay submission of the offer pending receipt of a CAGE code.

CAGE Code: __ __ __ __ __

( ) UNKNOWN

E4LC18 CONTRACTOR IDENTIFICATION NUMBER

The offeror is to supply his/her Contractor Identification Number, also known as the Data Universal Numbering System (DUNS) number, in the space provided below:

DUNS: __ __ __ __ __ __ __ __ __

This number can be obtained by following the instructions in FAR Clause 52.204-0006, which appears in Section L or Section 00100 of this document.

Section 00700 - Contract Clauses

CLAUSES INCORPORATED BY FULL TEXT

52.202-1 DEFINITIONS (JUL 2004)

(a) When a solicitation provision or contract clause uses a word or term that is defined in the Federal Acquisition Regulation (FAR), the word or term has the same meaning as the definition in FAR 2.101 in effect at the time the solicitation was issued, unless--

(1) The solicitation, or amended solicitation, provides a different definition;

(2) The contracting parties agree to a different definition;

(3) The part, subpart, or section of the FAR where the provision or clause is prescribed provides a different meaning; or

(4) The word or term is defined in FAR Part 31, for use in the cost principles and procedures.

(b) The FAR Index is a guide to words and terms the FAR defines and shows where each definition is located. The FAR Index is available via the Internet at http://www.acqnet.gov at the end of the FAR, after the FAR Appendix.

(End of clause)

52.203-3 GRATUITIES (APR 1984)

(a) The right of the Contractor to proceed may be terminated by written notice if, after notice and hearing, the agency head or a designee determines that the Contractor, its agent, or another representative--

(1) Offered or gave a gratuity (e.g., an entertainment or gift) to an officer, official, or employee of the Government; and

(2) Intended, by the gratuity, to obtain a contract or favorable treatment under a contract.

(b) The facts supporting this determination may be reviewed by any court having lawful jurisdiction.

(c) If this contract is terminated under paragraph (a) of this clause, the Government is entitled--

(1) To pursue the same remedies as in a breach of the contract; and

(2) In addition to any other damages provided by law, to exemplary damages of not less than 3 nor more than 10 times the cost incurred by the Contractor in giving gratuities to the person concerned, as determined by the agency head or a designee. (This subparagraph (c)(2) is applicable only if this contract uses money appropriated to the Department of Defense.)

(d) The rights and remedies of the Government provided in this clause shall not be exclusive and are in addition to any other rights and remedies provided by law or under this contract.

(End of clause)

52.203-5 COVENANT AGAINST CONTINGENT FEES (APR 1984)

(a) The Contractor warrants that no person or agency has been employed or retained to solicit or obtain this contract upon an agreement or understanding for a contingent fee, except a bona fide employee or agency. For breach or violation of this warranty, the Government shall have the right to annul this contract without liability or, in its discretion, to deduct from the contract price or consideration, or otherwise recover, the full amount of the contingent fee.

(b) "Bona fide agency," as used in this clause, means an established commercial or selling agency, maintained by a contractor for the purpose of securing business, that neither exerts nor proposes to exert improper influence to solicit or obtain Government contracts nor holds itself out as being able to obtain any Government contract or contracts through improper influence.

"Bona fide employee," as used in this clause, means a person, employed by a contractor and subject to the contractor's supervision and control as to time, place, and manner of performance, who neither exerts nor proposes to exert improper influence to solicit or obtain Government contracts nor holds out as being able to obtain any Government contract or contracts through improper influence.

"Contingent fee," as used in this clause, means any commission, percentage, brokerage, or other fee that is contingent upon the success that a person or concern has in securing a Government contract.

"Improper influence," as used in this clause, means any influence that induces or tends to induce a Government employee or officer to give consideration or to act regarding a Government contract on any basis other than the merits of the matter.

(End of clause)

52.203-7 ANTI-KICKBACK PROCEDURES. (JUL 1995)

(a) Definitions.

"Kickback," as used in this clause, means any money, fee, commission, credit, gift, gratuity, thing of value, or compensation of any kind which is provided, directly or indirectly, to any prime Contractor, prime Contractor employee, subcontractor, or subcontractor employee for the purpose of improperly obtaining or rewarding favorable treatment in connection with a prime contract or in connection with a subcontract relating to a prime contract.

"Person," as used in this clause, means a corporation, partnership, business association of any kind, trust, joint-stock company, or individual.

"Prime contract," as used in this clause, means a contract or contractual action entered into by the United States for the purpose of obtaining supplies, materials, equipment, or services of any kind.

"Prime Contractor," as used in this clause, means a person who has entered into a prime contract with the United States.

"Prime Contractor employee," as used in this clause, means any officer, partner, employee, or agent of a prime Contractor.

"Subcontract," as used in this clause, means a contract or contractual action entered into by a prime Contractor or subcontractor for the purpose of obtaining supplies, materials, equipment, or services of any kind under a prime contract.

"Subcontractor," as used in this clause, (1) means any person, other than the prime Contractor, who offers to furnish or furnishes any supplies, materials, equipment, or services of any kind under a prime contract or a subcontract entered into in connection with such prime contract, and (2) includes any person who offers to furnish or furnishes general supplies to the prime Contractor or a higher tier subcontractor.

"Subcontractor employee," as used in this clause, means any officer, partner, employee, or agent of a subcontractor.

(b) The Anti-Kickback Act of 1986 (41 U.S.C. 51-58) (the Act), prohibits any person from -

(1) Providing or attempting to provide or offering to provide any kickback;

(2) Soliciting, accepting, or attempting to accept any kickback; or

(3) Including, directly or indirectly, the amount of any kickback in the contract price charged by a prime Contractor to the United States or in the contract price charged by a subcontractor to a prime Contractor or higher tier subcontractor.

(c)(1) The Contractor shall have in place and follow reasonable procedures designed to prevent and detect possible violations described in paragraph (b) of this clause in its own operations and direct business relationships.

(2) When the Contractor has reasonable grounds to believe that a violation described in paragraph (b) of this clause may have occurred, the Contractor shall promptly report in writing the possible violation. Such reports shall be made to the inspector general of the contracting agency, the head of the contracting agency if the agency does not have an inspector general, or the Department of Justice.

(3) The Contractor shall cooperate fully with any Federal agency investigating a possible violation described in paragraph (b) of this clause.

(4) The Contracting Officer may (i) offset the amount of the kickback against any monies owed by the United States under the prime contract and/or (ii) direct that the Prime Contractor withhold, from sums owed a subcontractor under the prime contract, the amount of any kickback. The Contracting Officer may order the monies withheld under subdivision (c)(4)(ii) of this clause be paid over to the Government unless the Government has already offset those monies under subdivision (c)(4)(i) of this clause. In either case, the Prime Contractor shall notify the Contracting Officer when the monies are withheld.

(5) The Contractor agrees to incorporate the substance of this clause, including this subparagraph (c)(5) but excepting subparagraph (c)(1), in all subcontracts under this contract which exceed $100,000.

52.203-8 CANCELLATION, RESCISSION, AND RECOVERY OF FUNDS FOR ILLEGAL OR IMPROPER ACTIVITY (JAN 1997)

(a) If the Government receives information that a contractor or a person has engaged in conduct constituting a violation of subsection (a), (b), (c), or (d) of Section 27 of the Office of Federal Procurement Policy Act (41 U.S.C. 423) (the Act), as amended by section 4304 of the 1996 National Defense Authorization Act for Fiscal Year 1996 (Pub. L. 104-106), the Government may--

(1) Cancel the solicitation, if the contract has not yet been awarded or issued; or

(2) Rescind the contract with respect to which--

(i) The Contractor or someone acting for the Contractor has been convicted for an offense where the conduct constitutes a violation of subsection 27(a) or (b) of the Act for the purpose of either--

(A) Exchanging the information covered by such subsections for anything of value; or

(B) Obtaining or giving anyone a competitive advantage in the award of a Federal agency procurement contract; or

(ii) The head of the contracting activity has determined, based upon a preponderance of the evidence, that the Contractor or someone acting for the Contractor has engaged in conduct constituting an offense punishable under subsections 27(e)(1) of the Act.

(b) If the Government rescinds the contract under paragraph (a) of this clause, the Government is entitled to recover, in addition to any penalty prescribed by law, the amount expended under the contract.

(c) The rights and remedies of the Government specified herein are not exclusive, and are in addition to any other rights and remedies provided by law, regulation, or under this contract.

(End of clause)

52.203-10 PRICE OR FEE ADJUSTMENT FOR ILLEGAL OR IMPROPER ACTIVITY (JAN 1997)

(a) The Government, at its election, may reduce the price of a fixed-price type contract and the total cost and fee under a cost-type contract by the amount of profit or fee determined as set forth in paragraph (b) of this clause if the head of the contracting activity or designee determines that there was a violation of subsection 27 (a), (b), or (c) of the Office of Federal Procurement Policy Act, as amended (41 U.S.C. 423), as implemented in section 3.104 of the Federal Acquisition Regulation.

(b) The price or fee reduction referred to in paragraph (a) of this clause shall be--

(1) For cost-plus-fixed-fee contracts, the amount of the fee specified in the contract at the time of award;

(2) For cost-plus-incentive-fee contracts, the target fee specified in the contract at the time of award, notwithstanding any minimum fee or "fee floor" specified in the contract;

(3) For cost-plus-award-fee contracts--

(i) The base fee established in the contract at the time of contract award;

(ii) If no base fee is specified in the contract, 30 percent of the amount of each award fee otherwise payable to the Contractor for each award fee evaluation period or at each award fee determination point.

(4) For fixed-price-incentive contracts, the Government may--

(i) Reduce the contract target price and contract target profit both by an amount equal to the initial target profit specified in the contract at the time of contract award; or

(ii) If an immediate adjustment to the contract target price and contract target profit would have a significant adverse impact on the incentive price revision relationship under the contract, or adversely affect the contract financing provisions, the Contracting Officer may defer such adjustment until establishment of the total final price of the contract. The total final price established in accordance with the incentive price revision provisions of the contract shall be reduced by an amount equal to the initial target profit specified in the contract at the time of

contract award and such reduced price shall be the total final contract price.

(5) For firm-fixed-price contracts, by 10 percent of the initial contract price or a profit amount determined by the Contracting Officer from records or documents in existence prior to the date of the contract award.

(c) The Government may, at its election, reduce a prime contractor's price or fee in accordance with the procedures of paragraph (b) of this clause for violations of the Act by its subcontractors by an amount not to exceed the amount of profit or fee reflected in the subcontract at the time the subcontract was first definitively priced.

(d) In addition to the remedies in paragraphs (a) and (c) of this clause, the Government may terminate this contract for default. The rights and remedies of the Government specified herein are not exclusive, and are in addition to any other rights and remedies provided by law or under this contract.

(End of clause)

52.203-12 LIMITATION ON PAYMENTS TO INFLUENCE CERTAIN FEDERAL TRANSACTIONS (JUN 2003)

(a) Definitions.

"Agency," as used in this clause, means executive agency as defined in 2.101.

"Covered Federal action," as used in this clause, means any of the following Federal actions:

(1) The awarding of any Federal contract.

(2) The making of any Federal grant.

(3) The making of any Federal loan.

(4) The entering into of any cooperative agreement.

(5) The extension, continuation, renewal, amendment, or modification of any Federal contract, grant, loan, or cooperative agreement.

"Indian tribe" and "tribal organization," as used in this clause, have the meaning provided in section 4 of the Indian Self-Determination and Education Assistance Act (25 U.S.C. 450B) and include Alaskan Natives.

"Influencing or attempting to influence," as used in this clause, means making, with the intent to influence, any communication to or appearance before an officer or employee of any agency, a Member of Congress, an officer or employee of Congress, or an employee of a Member of Congress in connection with any covered Federal action.

"Local government," as used in this clause, means a unit of government in a State and, if chartered, established, or otherwise recognized by a State for the performance of a governmental duty, including a local public authority, a special district, an intrastate district, a council of governments, a sponsor group representative organization, and any other instrumentality of a local government.

"Officer or employee of an agency," as used in this clause, includes the following individuals who are employed by an agency:

(1) An individual who is appointed to a position in the Government under Title 5, United States Code, including a position under a temporary appointment.

(2) A member of the uniformed services, as defined in subsection 101(3),Title 37, United States Code.

(3) A special Government employee, as defined in section 202, Title 18, United States Code.

(4) An individual who is a member of a Federal advisory committee, as defined by the Federal Advisory Committee Act, Title 5, United States Code, appendix 2.

"Person," as used in this clause, means an individual, corporation, company, association, authority, firm, partnership, society, State, and local government, regardless of whether such entity is operated for profit, or not for profit. This term excludes an Indian tribe, tribal organization, or any other Indian organization with respect to expenditures specifically permitted by other Federal law.

"Reasonable compensation," as used in this clause, means, with respect to a regularly employed officer or employee of any person, compensation that is consistent with the normal compensation for such officer or employee for work that is not furnished to, not funded by, or not furnished in cooperation with the Federal Government.

"Reasonable payment," as used in this clause, means, with respect to professional and other technical services, a payment in an amount that is consistent with the amount normally paid for such services in the private sector.

"Recipient," as used in this clause, includes the Contractor and all subcontractors. This term excludes an Indian tribe, tribal organization, or any other Indian organization with respect to expenditures specifically permitted by other Federal law.

"Regularly employed," as used in this clause, means, with respect to an officer or employee of a person requesting or receiving a Federal contract, an officer or employee who is employed by such person for at least 130 working days within 1 year immediately preceding the date of the submission that initiates agency consideration of such person for receipt of such contract. An officer or employee who is employed by such person for less than 130 working days within 1 year immediately preceding the date of the submission that initiates agency consideration of such person shall be considered to be regularly employed as soon as he or she is employed by such person for 130 working days.

State, as used in this clause, means a State of the United States, the District of Columbia, or an outlying area of the United States, an agency or instrumentality of a State, and multi-State, regional, or interstate entity having governmental duties and powers.

(b) Prohibitions.

(1) Section 1352 of Title 31, United States Code, among other things, prohibits a recipient of a Federal contract, grant, loan, or cooperative agreement from using appropriated funds to pay any person for influencing or attempting to influence an officer or employee of any agency, a Member of Congress, an officer or employee of Congress, or an employee of a Member of Congress in connection with any of the following covered Federal actions: the awarding of any Federal contract; the making of any Federal grant; the making of any Federal loan; the entering into of any cooperative agreement; or the modification of any Federal contract, grant, loan, or cooperative agreement.

(2) The Act also requires Contractors to furnish a disclosure if any funds other than Federal appropriated funds (including profit or fee received under a covered Federal transaction) have been paid, or will be paid, to any person for influencing or attempting to influence an officer or employee of any agency, a Member of Congress, an officer or employee of Congress, or an employee of a Member of Congress in connection with a Federal contract, grant, loan, or cooperative agreement.

(3) The prohibitions of the Act do not apply under the following conditions:

(i) Agency and legislative liaison by own employees.

(A) The prohibition on the use of appropriated funds, in subparagraph (b)(1) of this clause, does not apply in the case of a payment of reasonable compensation made to an officer or employee of a person requesting or receiving a covered Federal action if the payment is for agency and legislative liaison activities not directly related to a covered Federal action.

(B) For purposes of subdivision (b)(3)(i)(A) of this clause, providing any information specifically requested by an agency or Congress is permitted at any time.

(C) The following agency and legislative liaison activities are permitted at any time where they are not related to a specific solicitation for any covered Federal action:

(1) Discussing with an agency the qualities and characteristics (including individual demonstrations) of the person's products or services, conditions or terms of sale, and service capabilities.

(2) Technical discussions and other activities regarding the application or adaptation of the person's products or services for an agency's use.

(D) The following agency and legislative liaison activities are permitted where they are prior to formal solicitation of any covered Federal action--

(1) Providing any information not specifically requested but necessary for an agency to make an informed decision about initiation of a covered Federal action;

(2) Technical discussions regarding the preparation of an unsolicited proposal prior to its official submission; and

(3) Capability presentations by persons seeking awards from an agency pursuant to the provisions of the Small Business Act, as amended by Pub. L. 95-507, and subsequent amendments.

(E) Only those services expressly authorized by subdivision (b)(3)(i)(A) of this clause are permitted under this clause.

(ii) Professional and technical services.

(A) The prohibition on the use of appropriated funds, in subparagraph (b)(1) of this clause, does not apply in the case of--

(1) A payment of reasonable compensation made to an officer or employee of a person requesting or receiving a covered Federal action or an extension, continuation, renewal, amendment, or modification of a covered Federal action, if payment is for professional or technical services rendered directly in the preparation, submission, or negotiation of any bid, proposal, or application for that Federal action or for meeting requirements imposed by or pursuant to law as a condition for receiving that Federal action.

(2) Any reasonable payment to a person, other than an officer or employee of a person requesting or receiving a covered Federal action or an extension, continuation, renewal, amendment, or modification of a covered Federal action if the payment is for professional or technical services rendered directly in the preparation, submission, or negotiation of any bid, proposal, or application for that Federal action or for meeting requirements imposed by or pursuant to law as a condition for receiving that Federal action. Persons other than officers or employees of a person requesting or receiving a covered Federal action include consultants and trade associations.

(B) For purposes of subdivision (b)(3)(ii)(A) of this clause, "professional and technical services" shall be limited to advice and analysis directly applying any professional or technical discipline. For example, drafting of a legal document accompanying a bid or proposal by a lawyer is allowable. Similarly, technical advice provided by an engineer on the performance or operational capability of a piece of equipment rendered directly in the negotiation of a contract is allowable. However, communications with the intent to influence made by a professional (such as a

licensed lawyer) or a technical person (such as a licensed accountant) are not allowable under this section unless they provide advice and analysis directly applying their professional or technical expertise and unless the advice or analysis is rendered directly and solely in the preparation, submission or negotiation of a covered Federal action. Thus, for example, communications with the intent to influence made by a lawyer that do not provide legal advice or analysis directly and solely related to the legal aspects of his or her client's proposal, but generally advocate one proposal over another are not allowable under this section because the lawyer is not providing professional legal services. Similarly, communications with the intent to influence made by an engineer providing an engineering analysis prior to the preparation or submission of a bid or proposal are not allowable under this section since the engineer is providing technical services but not directly in the preparation, submission or negotiation of a covered Federal action.

(C) Requirements imposed by or pursuant to law as a condition for receiving a covered Federal award include those required by law or regulation and any other requirements in the actual award documents.

(D) Only those services expressly authorized by subdivisions (b)(3)(ii)(A)(1) and (2) of this clause are permitted under this clause.

(E) The reporting requirements of FAR 3.803(a) shall not apply with respect to payments of reasonable compensation made to regularly employed officers or employees of a person.

(c) Disclosure.

(1) The Contractor who requests or receives from an agency a Federal contract shall file with that agency a disclosure form, OMB standard form LLL, Disclosure of Lobbying Activities, if such person has made or has agreed to make any payment using nonappropriated funds (to include profits from any covered Federal action), which would be prohibited under subparagraph (b)(1) of this clause, if paid for with appropriated funds.

(2) The Contractor shall file a disclosure form at the end of each calendar quarter in which there occurs any event that materially affects the accuracy of the information contained in any disclosure form previously filed by such person under subparagraph (c)(1) of this clause. An event that materially affects the accuracy of the information reported includes--

(i) A cumulative increase of $25,000 or more in the amount paid or expected to be paid for influencing or attempting to influence a covered Federal action; or

(ii) A change in the person(s) or individual(s) influencing or attempting to influence a covered Federal action; or

(iii) A change in the officer(s), employee(s), or Member(s) contacted to influence or attempt to influence a covered Federal action.

(3) The Contractor shall require the submittal of a certification, and if required, a disclosure form by any person who requests or receives any subcontract exceeding $100,000 under the Federal contract.

(4) All subcontractor disclosure forms (but not certifications) shall be forwarded from tier to tier until received by the prime Contractor. The prime Contractor shall submit all disclosures to the Contracting Officer at the end of the calendar quarter in which the disclosure form is submitted by the subcontractor. Each subcontractor certification shall be retained in the subcontract file of the awarding Contractor.

(d) Agreement. The Contractor agrees not to make any payment prohibited by this clause.

(e) Penalties.

(1) Any person who makes an expenditure prohibited under paragraph (a) of this clause or who fails to file or amend the disclosure form to be filed or amended by paragraph (b) of this clause shall be subject to civil penalties

as provided for by 31 U.S.C. 1352. An imposition of a civil penalty does not prevent the Government from seeking any other remedy that may be applicable.

(2) Contractors may rely without liability on the representation made by their subcontractors in the certification and disclosure form.

(f) Cost allowability. Nothing in this clause makes allowable or reasonable any costs which would otherwise be unallowable or unreasonable. Conversely, costs made specifically unallowable by the requirements in this clause will not be made allowable under any other provision.

(End of clause)

52.204-4 PRINTED OR COPIED DOUBLE-SIDED ON RECYCLED PAPER (AUG 2000)

(a) Definitions. As used in this clause--

“Postconsumer material” means a material or finished product that has served its intended use and has been discarded for disposal or recovery, having completed its life as a consumer item. Postconsumer material is a part of the broader category of “recovered material.” For paper and paper products, postconsumer material means “postconsumer fiber” defined by the U.S. Environmental Protection Agency (EPA) as--

(1) Paper, paperboard, and fibrous materials from retail stores, office buildings, homes, and so forth, after they have passed through their end-usage as a consumer item, including: used corrugated boxes; old newspapers; old magazines; mixed waste paper; tabulating cards; and used cordage; or

(2) All paper, paperboard, and fibrous materials that enter and are collected from municipal solid waste; but not

(3) Fiber derived from printers' over-runs, converters' scrap, and over-issue publications.

“Printed or copied double-sided” means printing or reproducing a document so that information is on both sides of a sheet of paper.

“Recovered material,” for paper and paper products, is defined by EPA in its Comprehensive Procurement Guideline as “recovered fiber” and means the following materials:

(1) Postconsumer fiber; and

(2) Manufacturing wastes such as--

(i) Dry paper and paperboard waste generated after completion of the papermaking process (that is, those manufacturing operations up to and including the cutting and trimming of the paper machine reel into smaller rolls or rough sheets) including: envelope cuttings, bindery trimmings, and other paper and paperboard waste resulting from printing, cutting, forming, and other converting operations; bag, box, and carton manufacturing wastes; and butt rolls, mill wrappers, and rejected unused stock; and

(ii) Repulped finished paper and paperboard from obsolete inventories of paper and paperboard manufacturers, merchants, wholesalers, dealers, printers, converters, or others.

(b) In accordance with Section 101 of Executive Order 13101 of September 14, 1998, Greening the Government through Waste Prevention, Recycling, and Federal Acquisition, the Contractor is encouraged to submit paper documents, such as offers, letters, or reports, that are printed or copied double-sided on recycled paper that meet

minimum content standards specified in Section 505 of Executive Order 13101, when not using electronic commerce methods to submit information or data to the Government.

(c) If the Contractor cannot purchase high-speed copier paper, offset paper, forms bond, computer printout paper, carbonless paper, file folders, white wove envelopes, writing and office paper, book paper, cotton fiber paper, and cover stock meeting the 30 percent postconsumer material standard for use in submitting paper documents to the Government, it should use paper containing no less than 20 percent postconsumer material. This lesser standard should be used only when paper meeting the 30 percent postconsumer material standard is not obtainable at a reasonable price or does not meet reasonable performance standards.

(End of clause)

52.209-6 PROTECTING THE GOVERNMENT'S INTEREST WHEN SUBCONTRACTING WITH CONTRACTORS DEBARRED, SUSPENDED, OR PROPOSED FOR DEBARMENT (JUL 1995)

(a) The Government suspends or debars Contractors to protect the Government's interests. The Contractor shall not enter into any subcontract in excess of the $25,000 with a Contractor that is debarred, suspended, or proposed for debarment unless there is a compelling reason to do so.

(b) The Contractor shall require each proposed first-tier subcontractor, whose subcontract will exceed $25,000, to disclose to the Contractor, in writing, whether as of the time of award of the subcontract, the subcontractor, or its principles, is or is not debarred, suspended, or proposed for debarment by the Federal Government.

(c) A corporate officer or a designee of the Contractor shall notify the Contracting Officer, in writing, before entering into a subcontract with a party that is debarred, suspended, or proposed for debarment (see FAR 9.404 for information on the List of Parties Excluded from Federal Procurement and Nonprocurement Programs). The notice must include the following:

(1) The name of the subcontractor.

(2) The Contractor's knowledge of the reasons for the subcontractor being on the List of Parties Excluded from Federal Procurement and Nonprocurement Programs.

(3) The compelling reason(s) for doing business with the subcontractor notwithstanding its inclusion on the List of Parties Excluded from Federal Procurement and Nonprocurement Programs.

(4) The systems and procedures the Contractor has established to ensure that it is fully protecting the Government's interests when dealing with such subcontractor in view of the specific basis for the party's debarment, suspension, or proposed debarment.

(End of clause)

52.211-18 VARIATION IN ESTIMATED QUANTITY (APR 1984)

If the quantity of a unit-priced item in this contract is an estimated quantity and the actual quantity of the unit-priced item varies more than 15 percent above or below the estimated quantity, an equitable adjustment in the contract price shall be made upon demand of either party. The equitable adjustment shall be based upon any increase or decrease in costs due solely to the variation above 115 percent or below 85 percent of the estimated quantity. If the quantity variation is such as to cause an increase in the time necessary for completion, the Contractor may request, in writing, an extension of time, to be received by the Contracting Officer within 10 days from the beginning of the

delay, or within such further period as may be granted by the Contracting Officer before the date of final settlement of the contract. Upon the receipt of a written request for an extension, the Contracting Officer shall ascertain the facts and make an adjustment for extending the completion date as, in the judgement of the Contracting Officer, is justified.

52.215-2 AUDIT AND RECORDS--NEGOTIATION (JUN 1999)

(a) As used in this clause, "records" includes books, documents, accounting procedures and practices, and other data, regardless of type and regardless of whether such items are in written form, in the form of computer data, or in any other form.

(b) Examination of costs. If this is a cost-reimbursement, incentive, time-and-materials, labor-hour, or price redeterminable contract, or any combination of these, the Contractor shall maintain and the Contracting Officer, or an authorized representative of the Contracting Officer, shall have the right to examine and audit all records and other evidence sufficient to reflect properly all costs claimed to have been incurred or anticipated to be incurred directly or indirectly in performance of this contract. This right of examination shall include inspection at all reasonable times of the Contractor's plants, or parts of them, engaged in performing the contract.

(c) Cost or pricing data. If the Contractor has been required to submit cost or pricing data in connection with any pricing action relating to this contract, the Contracting Officer, or an authorized representative of the Contracting Officer, in order to evaluate the accuracy, completeness, and currency of the cost or pricing data, shall have the right to examine and audit all of the Contractor's records, including computations and projections, related to--

(1) The proposal for the contract, subcontract, or modification;

(2) The discussions conducted on the proposal(s), including those related to negotiating;

(3) Pricing of the contract, subcontract, or modification; or

(4) Performance of the contract, subcontract or modification.

(d) Comptroller General--(1) The Comptroller General of the United States, or an authorized representative, shall have access to and the right to examine any of the Contractor's directly pertinent records involving transactions related to this contract or a subcontract hereunder.

(2) This paragraph may not be construed to require the Contractor or subcontractor to create or maintain any record that the Contractor or subcontractor does not maintain in the ordinary course of business or pursuant to a provision of law.

(e) Reports. If the Contractor is required to furnish cost, funding, or performance reports, the Contracting Officer or an authorized representative of the Contracting Officer shall have the right to examine and audit the supporting records and materials, for the purpose of evaluating (1) the effectiveness of the Contractor's policies and procedures to produce data compatible with the objectives of these reports and (2) the data reported.

(f) Availability. The Contractor shall make available at its office at all reasonable times the records, materials, and other evidence described in paragraphs (a), (b), (c), (d), and (e) of this clause, for examination, audit, or reproduction, until 3 years after final payment under this contract or for any shorter period specified in Subpart 4.7, Contractor Records Retention, of the Federal Acquisition Regulation (FAR), or for any longer period required by statute or by other clauses of this contract. In addition--

(1) If this contract is completely or partially terminated, the Contractor shall make available the records relating to the work terminated until 3 years after any resulting final termination settlement; and

(2) The Contractor shall make available records relating to appeals under the Disputes clause or to litigation or the settlement of claims arising under or relating to this contract until such appeals, litigation, or claims are finally resolved.

(g) The Contractor shall insert a clause containing all the terms of this clause, including this paragraph (g), in all subcontracts under this contract that exceed the simplified acquisition threshold, and--

(1) That are cost-reimbursement, incentive, time-and-materials, labor-hour, or price-redeterminable type or any combination of these;

(2) For which cost or pricing data are required; or

(3) That require the subcontractor to furnish reports as discussed in paragraph (e) of this clause.

The clause may be altered only as necessary to identify properly the contracting parties and the Contracting Officer under the Government prime contract.

(End of clause)

52.215-10 PRICE REDUCTION FOR DEFECTIVE COST OR PRICING DATA (OCT 1997)

(a) If any price, including profit or fee, negotiated in connection with this contract, or any cost reimbursable under this contract, was increased by any significant amount because--

(1) The Contractor or a subcontractor furnished cost or pricing data that were not complete, accurate, and current as certified in its Certificate of Current Cost or Pricing Data;

(2) A subcontractor or prospective subcontractor furnished the Contractor cost or pricing data that were not complete, accurate, and current as certified in the Contractor's Certificate of Current Cost or Pricing Data; or

(3) Any of these parties furnished data of any description that were not accurate, the price or cost shall be reduced accordingly and the contract shall be modified to reflect the reduction.

(b) Any reduction in the contract price under paragraph (a) of this clause due to defective data from a prospective subcontractor that was not subsequently awarded the subcontract shall be limited to the amount, plus applicable overhead and profit markup, by which--

(1) The actual subcontract; or

(2) The actual cost to the Contractor, if there was no subcontract, was less than the prospective subcontract cost estimate submitted by the Contractor; provided, that the actual subcontract price was not itself affected by defective cost or pricing data.

(c)(1) If the Contracting Officer determines under paragraph (a) of this clause that a price or cost reduction should be made, the Contractor agrees not to raise the following matters as a defense:

(i) The Contractor or subcontractor was a sole source supplier or otherwise was in a superior bargaining position and thus the price of the contract would not have been modified even if accurate, complete, and current cost or pricing data had been submitted.

(ii) The Contracting Officer should have known that the cost or pricing data in issue were defective even though the Contractor or subcontractor took no affirmative action to bring the character of the data to the attention of the Contracting Officer.

(iii) The contract was based on an agreement about the total cost of the contract and there was no agreement about the cost of each item procured under the contract.

(iv) The Contractor or subcontractor did not submit a Certificate of Current Cost or Pricing Data.

(2)(i) Except as prohibited by subdivision (c)(2)(ii) of this clause, an offset in an amount determined appropriate by the Contracting Officer based upon the facts shall be allowed against the amount of a contract price reduction if--

(A) The Contractor certifies to the Contracting Officer that, to the best of the Contractor's knowledge and belief, the Contractor is entitled to the offset in the amount requested; and

(B) The Contractor proves that the cost or pricing data were available before the “as of” date specified on its Certificate of Current Cost or Pricing Data, and that the data were not submitted before such date.

(ii) An offset shall not be allowed if--

(A) The understated data were known by the Contractor to be understated before the “as of” date specified on its Certificate of Current Cost or Pricing Data; or

(B) The Government proves that the facts demonstrate that the contract price would not have increased in the amount to be offset even if the available data had been submitted before the “as of” date specified on its Certificate of Current Cost or Pricing Data.

(d) If any reduction in the contract price under this clause reduces the price of items for which payment was made prior to the date of the modification reflecting the price reduction, the Contractor shall be liable to and shall pay the United States at the time such overpayment is repaid--

(1) Simple interest on the amount of such overpayment to be computed from the date(s) of overpayment to the Contractor to the date the Government is repaid by the Contractor at the applicable underpayment rate effective for each quarter prescribed by the Secretary of the Treasury under 26 U.S.C. 6621(a)(2); and

A penalty equal to the amount of the overpayment, if the Contractor or subcontractor knowingly submitted cost or pricing data that were incomplete, inaccurate, or noncurrent.

(End of clause)

52.215-11 PRICE REDUCTION FOR DEFECTIVE COST OR PRICING DATA--MODIFICATIONS (OCT 1997)

(a) This clause shall become operative only for any modification to this contract involving a pricing adjustment expected to exceed the threshold for submission of cost or pricing data at FAR 15.403-4, except that this clause does not apply to any modification if an exception under FAR 15.403-1 applies.

(b) If any price, including profit or fee, negotiated in connection with any modification under this clause, or any cost reimbursable under this contract, was increased by any significant amount because (1) the Contractor or a subcontractor furnished cost or pricing data that were not complete, accurate, and current as certified in its Certificate of Current Cost or Pricing Data, (2) a subcontractor or prospective subcontractor furnished the Contractor cost or pricing data that were not complete, accurate, and current as certified in the Contractor's Certificate of Current Cost or Pricing Data, or (3) any of these parties furnished data of any description that were not accurate, the price or cost shall be reduced accordingly and the contract shall be modified to reflect the

reduction. This right to a price reduction is limited to that resulting from defects in data relating to modifications for which this clause becomes operative under paragraph (a) of this clause.

(c) Any reduction in the contract price under paragraph (b) of this clause due to defective data from a prospective subcontractor that was not subsequently awarded the subcontract shall be limited to the amount, plus applicable overhead and profit markup, by which--

(1) The actual subcontract; or

(2) The actual cost to the Contractor, if there was no subcontract, was less than the prospective subcontract cost estimate submitted by the Contractor; provided, that the actual subcontract price was not itself affected by defective cost or pricing data.

(d)(1) If the Contracting Officer determines under paragraph (b) of this clause that a price or cost reduction should be made, the Contractor agrees not to raise the following matters as a defense:

(i) The Contractor or subcontractor was a sole source supplier or otherwise was in a superior bargaining position and thus the price of the contract would not have been modified even if accurate, complete, and current cost or pricing data had been submitted.

(ii) The Contracting Officer should have known that the cost or pricing data in issue were defective even though the Contractor or subcontractor took no affirmative action to bring the character of the data to the attention of the Contracting Officer.

(iii) The contract was based on an agreement about the total cost of the contract and there was no agreement about the cost of each item procured under the contract.

(iv) The Contractor or subcontractor did not submit a Certificate of Current Cost or Pricing Data.

(2)(i) Except as prohibited by subdivision (d)(2)(ii) of this clause, an offset in an amount determined appropriate by the Contracting Officer based upon the facts shall be allowed against the amount of a contract price reduction if--

(A) The Contractor certifies to the Contracting Officer that, to the best of the Contractor's knowledge and belief, the Contractor is entitled to the offset in the amount requested; and

(B) The Contractor proves that the cost or pricing data were available before the “as of” date specified on its Certificate of Current Cost or Pricing Data, and that the data were not submitted before such date.

(ii) An offset shall not be allowed if--

(A) The understated data were known by the Contractor to be understated before the “as of” date specified on its Certificate of Current Cost or Pricing Data; or

(B) The Government proves that the facts demonstrate that the contract price would not have increased in the amount to be offset even if the available data had been submitted before the “as of” date specified on its Certificate of Current Cost or Pricing Data.

(e) If any reduction in the contract price under this clause reduces the price of items for which payment was made prior to the date of the modification reflecting the price reduction, the Contractor shall be liable to and shall pay the United States at the time such overpayment is repaid--

(1) Simple interest on the amount of such overpayment to be computed from the date(s) of overpayment to the Contractor to the date the Government is repaid by the Contractor at the applicable underpayment rate effective for each quarter prescribed by the Secretary of the Treasury under 26 U.S.C. 6621(a)(2); and

A penalty equal to the amount of the overpayment, if the Contractor or subcontractor knowingly submitted cost or pricing data that were incomplete, inaccurate, or noncurrent.

(End of clause)

52.215-13 SUBCONTRACTOR COST OR PRICING DATA--MODIFICATIONS (OCT 1997)

(a) The requirements of paragraphs (b) and (c) of this clause shall--

(1) Become operative only for any modification to this contract involving a pricing adjustment expected to exceed the threshold for submission of cost or pricing data at FAR 15.403-4; and

(2) Be limited to such modifications.

(b) Before awarding any subcontract expected to exceed the threshold for submission of cost or pricing data at FAR 15.403-4, on the date of agreement on price or the date of award, whichever is later; or before pricing any subcontract modification involving a pricing adjustment expected to exceed the threshold for submission of cost or pricing data at FAR 15.403-4, the Contractor shall require the subcontractor to submit cost or pricing data (actually or by specific identification in writing), unless an exception under FAR 15.403-1 applies.

(c) The Contractor shall require the subcontractor to certify in substantially the form prescribed in FAR 15.406-2 that, to the best of its knowledge and belief, the data submitted under paragraph (b) of this clause were accurate, complete, and current as of the date of agreement on the negotiated price of the subcontract or subcontract modification.

The Contractor shall insert the substance of this clause, including this paragraph (d), in each subcontract that exceeds the threshold for submission of cost or pricing data at FAR 15.403-4 on the date of agreement on price or the date of award, whichever is later.

(End of clause)

52.215-19 NOTIFICATION OF OWNERSHIP CHANGES (OCT 1997)

(a) The Contractor shall make the following notifications in writing:

(1) When the Contractor becomes aware that a change in its ownership has occurred, or is certain to occur, that could result in changes in the valuation of its capitalized assets in the accounting records, the Contractor shall notify the Administrative Contracting Officer (ACO) within 30 days.

(2) The Contractor shall also notify the ACO within 30 days whenever changes to asset valuations or any other cost changes have occurred or are certain to occur as a result of a change in ownership.

(b) The Contractor shall--

(1) Maintain current, accurate, and complete inventory records of assets and their costs;

(2) Provide the ACO or designated representative ready access to the records upon request;

(3) Ensure that all individual and grouped assets, their capitalized values, accumulated depreciation or amortization,

and remaining useful lives are identified accurately before and after each of the Contractor's ownership changes; and

(4) Retain and continue to maintain depreciation and amortization schedules based on the asset records maintained before each Contractor ownership change.

The Contractor shall include the substance of this clause in all subcontracts under this contract that meet the applicability requirement of FAR 15.408(k).

(End of clause)

52.215-21 REQUIREMENTS FOR COST OR PRICING DATA OR INFORMATION OTHER THAN COST OR PRICING DATA--MODIFICATIONS (OCT 1997)

(a) Exceptions from cost or pricing data. (1) In lieu of submitting cost or pricing data for modifications under this contract, for price adjustments expected to exceed the threshold set forth at FAR 15.403-4 on the date of the agreement on price or the date of the award, whichever is later, the Contractor may submit a written request for exception by submitting the information described in the following subparagraphs. The Contracting Officer may require additional supporting information, but only to the extent necessary to determine whether an exception should be granted, and whether the price is fair and reasonable--

(i) Identification of the law or regulation establishing the price offered. If the price is controlled under law by periodic rulings, reviews, or similar actions of a governmental body, attach a copy of the controlling document, unless it was previously submitted to the contracting office.

(ii) Information on modifications of contracts or subcontracts for commercial items. (A) If--

(1) The original contract or subcontract was granted an exception from cost or pricing data requirements because the price agreed upon was based on adequate price competition or prices set by law or regulation, or was a contract or subcontract for the acquisition of a commercial item; and

(2) The modification (to the contract or subcontract) is not exempted based on one of these exceptions, then the Contractor may provide information to establish that the modification would not change the contract or subcontract from a contract or subcontract for the acquisition of a commercial item to a contract or subcontract for the acquisition of an item other than a commercial item.

(B) For a commercial item exception, the Contractor shall provide, at a minimum, information on prices at which the same item or similar items have previously been sold that is adequate for evaluating the reasonableness of the price of the modification. Such information may include--

(1) For catalog items, a copy of or identification of the catalog and its date, or the appropriate pages for the offered items, or a statement that the catalog is on file in the buying office to which the proposal is being submitted. Provide a copy or describe current discount policies and price lists (published or unpublished), e.g., wholesale, original equipment manufacturer, or reseller. Also explain the basis of each offered price and its relationship to the established catalog price, including how the proposed price relates to the price of recent sales in quantities similar to the proposed quantities.

(2) For market-priced items, the source and date or period of the market quotation or other basis for market price, the base amount, and applicable discounts. In addition, describe the nature of the market.

(3) For items included on an active Federal Supply Service Multiple Award Schedule contract, proof that an exception has been granted for the schedule item.

(2) The Contractor grants the Contracting Officer or an authorized representative the right to examine, at any time before award, books, records, documents, or other directly pertinent records to verify any request for an exception under this clause, and the reasonableness of price. For items priced using catalog or market prices, or law or regulation , access does not extend to cost or profit information or other data relevant solely to the Contractor's determination of the prices to be offered in the catalog or marketplace.

(b) Requirements for cost or pricing data. If the Contractor is not granted an exception from the requirement to submit cost or pricing data, the following applies:

(1) The Contractor shall submit cost or pricing data and supporting attachments in accordance with Table 15-2 of FAR 15.408.

As soon as practicable after agreement on price, but before award (except for unpriced actions), the Contractor shall submit a Certificate of Current Cost or Pricing Data, as prescribed by FAR 15.406-2.

(End of clause)

52.217-7 OPTION FOR INCREASED QUANTITY--SEPARATELY PRICED LINE ITEM (MAR 1989)

The Government may require the delivery of the numbered line item, identified in the Schedule as an option item, in the quantity and at the price stated in the Schedule. The Contracting Officer may exercise the option by written notice to the Contractor within 120 calendar days from receipt of Notice to Proceed. Delivery of added items shall continue at the same rate that like items are called for under the contract, unless the parties otherwise agree.

(End of clause)

52.219-4 NOTICE OF PRICE EVALUATION PREFERENCE FOR HUBZONE SMALL BUSINESS CONCERNS (JAN 1999)

(a) Definition. HUBZone small business concern, as used in this clause, means a small business concern that appears on the List of Qualified HUBZone Small Business Concerns maintained by the Small Business Administration.

(b) Evaluation preference. (1) Offers will be evaluated by adding a factor of 10 percent to the price of all offers, except--

(i) Offers from HUBZone small business concerns that have not waived the evaluation preference;

(ii) Otherwise successful offers from small business concerns;

(iii) Otherwise successful offers of eligible products under the Trade Agreements Act when the dollar threshold for application of the Act is exceeded (see 25.402 of the Federal Acquisition Regulation (FAR)); and

(iv) Otherwise successful offers where application of the factor would be inconsistent with a Memorandum of Understanding or other international agreement with a foreign government.

(2) The factor of 10 percent shall be applied on a line item basis or to any group of items on which award may be made. Other evaluation factors described in the solicitation shall be applied before application of the factor.

(3) A concern that is both a HUBZone small business concern and a small disadvantaged business concern will receive the benefit of both the HUBZone small business price evaluation preference and the small disadvantaged business price evaluation adjustment (see FAR clause 52.219-23). Each applicable price evaluation preference or adjustment shall be calculated independently against an offeror's base offer.

These individual preference amounts shall be added together to arrive at the total evaluated price for that offer.

(c) Waiver of evaluation preference. A HUBZone small business concern may elect to waive the evaluation preference, in which case the factor will be added to its offer for evaluation purposes. The agreements in paragraph (d) of this clause do not apply if the offeror has waived the evaluation preference.

___ Offeror elects to waive the evaluation preference.

(d) Agreement. A HUBZone small business concern agrees that in the performance of the contract, in the case of a contract for

(1) Services (except construction), at least 50 percent of the cost of personnel for contract performance will be spent for employees of the concern or employees of other HUBZone small business concerns;

(2) Supplies (other than procurement from a nonmanufacturer of such supplies), at least 50 percent of the cost of manufacturing, excluding the cost of materials, will be performed by the concern or other HUBZone small business concerns;

(3) General construction, at least 15 percent of the cost of the contract performance incurred for personnel will be will be spent on the concern's employees or the employees of other HUBZone small business concerns; or

(4) Construction by special trade contractors, at least 25 percent of the cost of the contract performance incurred for personnel will be spent on the concern's employees or the employees of other HUBZone small business concerns.

(e) A HUBZone joint venture agrees that in the performance of the contract, the applicable percentage specified in paragraph (d) of this clause will be performed by the HUBZone small business participant or participants.

(f) A HUBZone small business concern nonmanufacturer agrees to furnish in performing this contract only end items manufactured or produced by HUBZone small business manufacturer concerns. This paragraph does not apply in connection with construction or service contracts.

(End of clause)

52.219-9 SMALL BUSINESS SUBCONTRACTING PLAN (JAN 2002)--ALTERNATE II (OCT 2001).

(a) This clause does not apply to small business concerns.

(b) Definitions. As used in this clause--

Commercial item means a product or service that satisfies the definition of commercial item in section 2.101 of the Federal Acquisition Regulation.

Commercial plan means a subcontracting plan (including goals) that covers the offeror's fiscal year and that applies to the entire production of commercial items sold by either the entire company or a portion thereof (e.g., division, plant, or product line).

Individual contract plan means a subcontracting plan that covers the entire contract period (including option periods), applies to a specific contract, and has goals that are based on the offeror's planned subcontracting in

support of the specific contract, except that indirect costs incurred for common or joint purposes may be allocated on a prorated basis to the contract.

Master plan means a subcontracting plan that contains all the required elements of an individual contract plan, except goals, and may be incorporated into individual contract plans, provided the master plan has been approved.

Subcontract means any agreement (other than one involving an employer-employee relationship) entered into by a Federal Government prime Contractor or subcontractor calling for supplies or services required for performance of the contract or subcontract.

(c) Proposals submitted in response to this solicitation shall include a subcontracting plan that separately addresses subcontracting with small business, veteran-owner small business, HUBZone small business, small disadvantaged business, and women-owned small business concerns. If the offeror is submitting an individual contract plan, the plan must separately address subcontracting with small business, veteran-owner small business, HUBZone small business, small disadvantaged business, and women-owned small business concerns, with a separate part for the basic contract and separate parts for each option (if any). The plan shall be included in and made a part of the resultant contract. The subcontracting plan shall be negotiated within the time specified by the Contracting Officer. Failure to submit and negotiate a subcontracting plan shall make the offeror ineligible for award of a contract.

(d) The offeror's subcontracting plan shall include the following:

(1) Goals, expressed in terms of percentages of total planned subcontracting dollars, for the use of small business, veteran-owned small business, HUBZone small business, small disadvantaged business, and women-owned small business concerns as subcontractors. The offeror shall include all subcontracts that contribute to contract performance, and may include a proportionate share of products and services that are normally allocated as indirect costs.

(2) A statement of--

(i) Total dollars planned to be subcontracted for an individual contract plan; or the offeror's total projected sales, expressed in dollars, and the total value of projected subcontracts to support the sales for a commercial plan;

(ii) Total dollars planned to be subcontracted to small business concerns;

(iii) Total dollars planned to be subcontracted to veteran-owned small business concerns;

(iv) Total dollars planned to be subcontracted to HUBZone small business concerns;

(v) Total dollars planned to be subcontracted to small disadvantaged business concerns; and

(vi) Total dollars planned to be subcontracted to women-owned small business concerns.

(3) A description of the principal types of supplies and services to be subcontracted, and an identification of the types planned for subcontracting to--

(i) Small business concerns;

(ii) Veteran-owned small business concerns;

(iii) HUBZone small business concerns;

(iv) Small disadvantaged business concerns; and

(v) Women-owned small business concerns.

(4) A description of the method used to develop the subcontracting goals in paragraph (d)(1) of this clause.

(5) A description of the method used to identify potential sources for solicitation purposes (e.g., existing company source lists, the Procurement Marketing and Access Network (PRO-Net) of the Small Business Administration (SBA), veterans service organizations, the National Minority Purchasing Council Vendor Information Service, the Research and Information Division of the Minority Business Development Agency in the Department of Commerce, or small, HUBZone, small disadvantaged, and women-owned small business trade associations). A firm may rely on the information contained in PRO-Net as an accurate representation of a concern's size and ownership characteristics for the purposes of maintaining a small, veteran-owned small, HUBZone small, small disadvantaged, and women-owned small business source list. Use of PRO-Net as its source list does not relieve a firm of its responsibilities (e.g., outreach, assistance, counseling, or publicizing subcontracting opportunities) in this clause.

(6) A statement as to whether or not the offeror in included indirect costs in establishing subcontracting goals, and a description of the method used to determine the proportionate share of indirect costs to be incurred with—

(i) Small business concerns;

(ii) Veteran-owned small business concerns;

(iii) HUBZone small business concerns;

(iv) Small disadvantaged business concerns; and

(v) Women-owned small business concerns.

(7) The name of the individual employed by the offeror who will administer the offeror's subcontracting program, and a description of the duties of the individual.

(8) A description of the efforts the offeror will make to assure that small business, veteran-owned small business, HUBZone small business, small disadvantaged business and women-owned small business concerns have an equitable opportunity to compete for subcontracts.

(9) Assurances that the offeror will include the clause of this contract entitled ``Utilization of Small Business Concerns" in all subcontracts that offer further subcontracting opportunities, and that the offeror will require all subcontractors (except small business concerns) that receive subcontracts in excess of $500,000 ($1,000,000 for construction of any public facility) to adopt a subcontracting plan that complies with the requirements of this clause.

(10) Assurances that the offeror will--

(i) Cooperate in any studies or surveys as may be required;

(ii) Submit periodic reports so that the Government can determine the extent of compliance by the offeror with the subcontracting plan;

(iii) Submit Standard Form (SF) 294, Subcontracting Report for Individual Contracts, and/or SF 295, Summary Subcontract Report, in accordance with paragraph (j) of this clause. The reports shall provide information on subcontract awards to small business concerns, veteran-owned small business concerns, service-disabled veteran-owned small business concerns, small disadvantaged business concerns, women-owned small business concerns, and Historically Black Colleges and Universities and Minority Institutions. Reporting shall be in accordance with the instructions on the forms or as provided in agency regulations.

(iv) Ensure that its subcontractors agree to submit SF 294 and SF 295.

(11) A description of the types of records that will be maintained concerning procedures that have been adopted to comply with the requirements and goals in the plan, including establishing source lists; and a description of the offeror's efforts to locate small business, veteran-owned small business, HUBZone small business, small disadvantaged business, and women-owned small business concerns and award subcontracts to them. The records shall include at least the following (on a plant-wide or company-wide basis, unless otherwise indicated)

(i) Source lists (e.g., PRO-Net), guides, and other data that identify small business, veteran-owner small business, HUBZone small business, small disadvantaged business, and women-owned small business concerns.

(ii) Organizations contacted in an attempt to locate sources that are small business, veteran-owned small business, HUBZone small business, small disadvantaged business, or women-owned small business concerns.

(iii) Records on each subcontract solicitation resulting in an award of more than $100,000, indicating--

(A) Whether small business concerns were solicited and, if not, why not;

(B) Whether veteran-owned small business concerns were solicited and, if not, why not;

(C) Whether HUBZone small business concerns were solicited and, if not, why not;

(D) Whether small disadvantaged business concerns were solicited and, if not, why not;

(E) Whether women-owned small business concerns were solicited and, if not, why not; and

(F) If applicable, the reason award was not made to a small business concern.

(iv) Records of any outreach efforts to contact--

(A) Trade associations;

(B) Business development organizations;

(C) Conferences and trade fairs to locate small, HUBZone small, small disadvantaged, and women-owned small business sources; and

(D) Veterans service organizations.

(v) Records of internal guidance and encouragement provided to buyers through--

(A) Workshops, seminars, training, etc.; and

(B) Monitoring performance to evaluate compliance with the program's requirements.

(vi) On a contract-by-contract basis, records to support award data submitted by the offeror to the Government, including the name, address, and business size of each subcontractor. Contractors having commercial plans need not comply with this requirement.

(e) In order to effectively implement this plan to the extent consistent with efficient contract performance, the Contractor shall perform the following functions:

(1) Assist small business, veteran-owner small business, HUBZone small business, small disadvantaged business, and women-owned small business concerns by arranging solicitations, time for the preparation of bids, quantities, specifications, and delivery schedules so as to facilitate the participation by such concerns. Where the Contractor's lists of potential small business, veteran-owner small business, HUBZone small business, small disadvantaged

business, and women-owned small business subcontractors are excessively long, reasonable effort shall be made to give all such small business concerns an opportunity to compete over a period of time.

(2) Provide adequate and timely consideration of the potentialities of small business, veteran-owner small business, HUBZone small business, small disadvantaged business, and women-owned small business concerns in all ``make-or-buy'' decisions.

(3) Counsel and discuss subcontracting opportunities with representatives of small business, veteran-owner small business, HUBZone small business, small disadvantaged business, and women-owned small business firms.

(4) Provide notice to subcontractors concerning penalties and remedies for misrepresentations of business status as small, veteran-owner small business, HUBZone small, small disadvantaged, or women-owned small business for the purpose of obtaining a subcontract that is to be included as part or all of a goal contained in the Contractor's subcontracting plan.

(f) A master plan on a plant or division-wide basis that contains all the elements required by paragraph (d) of this clause, except goals, may be incorporated by reference as a part of the subcontracting plan required of the offeror by this clause; provided--
(1) the master plan has been approved, (2) the offeror ensures that the master plan is updated as necessary and provides copies of the approved master plan, including evidence of its approval, to the Contracting Officer, and (3) goals and any deviations from the master plan deemed necessary by the Contracting Officer to satisfy the requirements of this contract are set forth in the individual subcontracting plan.

(g) A commercial plan is the preferred type of subcontracting plan for contractors furnishing commercial items. The commercial plan shall relate to the offeror's planned subcontracting generally, for both commercial and Government business, rather than solely to the Government contract. Commercial plans are also preferred for subcontractors that provide commercial items under a prime contract, whether or not the prime contractor is supplying a commercial item.

(h) Prior compliance of the offeror with other such subcontracting plans under previous contracts will be considered by the Contracting Officer in determining the responsibility of the offeror for award of the contract.

(i) The failure of the Contractor or subcontractor to comply in good faith with (1) the clause of this contract entitled "Utilization Of Small Business Concerns," or (2) an approved plan required by this clause, shall be a material breach of the contract.

(j) The Contractor shall submit the following reports:

(1) Standard Form 294, Subcontracting Report for Individual Contracts. This report shall be submitted to the Contracting Officer semiannually and at contract completion. The report covers subcontract award data related to this contract. This report is not required for commercial plans.

(2) Standard Form 295, Summary Subcontract Report. This report encompasses all of the contracts with the awarding agency. It must be submitted semi-annually for contracts with the Department of Defense and annually for contracts with civilian agencies. If the reporting activity is covered by a commercial plan, the reporting activity must report annually all subcontract awards under that plan. All reports submitted at the close of each fiscal year (both individual and commercial plans) shall include a breakout, in the Contractor's format, of subcontract awards, in whole dollars, to small disadvantaged business concerns by North American Industry Classification System (NAICS) Industry Subsector. For a commercial plan, the Contractor may obtain from each of its subcontractors a predominant NAICS Industry Subsector and report all awards to that subcontractor under its predominant NAICS Industry Subsector.

(End of clause)

52.219-14 LIMITATIONS ON SUBCONTRACTING (DEC 1996)

(a) This clause does not apply to the unrestricted portion of a partial set-aside.

(b) By submission of an offer and execution of a contract, the Offeror/Contractor agrees that in performance of the contract in the case of a contract for--

(1) Services (except construction). At least 50 percent of the cost of contract performance incurred for personnel shall be expended for employees of the concern.

(2) Supplies (other than procurement from a nonmanufacturer of such supplies). The concern shall perform work for at least 50 percent of the cost of manufacturing the supplies, not including the cost of materials.

(3) General construction. The concern will perform at least 15 percent of the cost of the contract, not including the cost of materials, with its own employees.

(4) Construction by special trade contractors. The concern will perform at least 25 percent of the cost of the contract, not including the cost of materials, with its own employees.

52.222-3 CONVICT LABOR (JUN 2003)

(a) Except as provided in paragraph (b) of this clause, the Contractor shall not employ in the performance of this contract any person undergoing a sentence of imprisonment imposed by any court of a State, the District of Columbia, Puerto Rico, the Northern Mariana Islands, American Samoa, Guam, or the U.S. Virgin Islands.

(b) The Contractor is not prohibited from employing persons--

(1) On parole or probation to work at paid employment during the term of their sentence;

(2) Who have been pardoned or who have served their terms; or

(3) Confined for violation of the laws of any of the States, the District of Columbia, Puerto Rico, the Northern Mariana Islands, American Samoa, Guam, or the U.S. Virgin Islands who are authorized to work at paid employment in the community under the laws of such jurisdiction, if--

(i) The worker is paid or is in an approved work training program on a voluntary basis;

(ii) Representatives of local union central bodies or similar labor union organizations have been consulted;

(iii) Such paid employment will not result in the displacement of employed workers, or be applied in skills, crafts, or trades in which there is a surplus of available gainful labor in the locality, or impair existing contracts for services;

(iv) The rates of pay and other conditions of employment will not be less than those paid or provided for work of a similar nature in the locality in which the work is being performed; and

(v) The Attorney General of the United States has certified that the work-release laws or **regulations** of the jurisdiction involved are in conformity with the requirements of Executive Order 11755, as amended by Executive Orders 12608 and 12943.

(End of clause)

52.222-4 CONTRACT WORK HOURS AND SAFETY STANDARDS ACT - OVERTIME COMPENSATION. (SEP 2000)

(a) Overtime requirements. No Contractor or subcontractor employing laborers or mechanics (see Federal Acquisition Regulation 22.300) shall require or permit them to work over 40 hours in any workweek unless they are paid at least 1 and 1/2 times the basic rate of pay for each hour worked over 40 hours.

(b) Violation; liability for unpaid wages; liquidated damages. The responsible Contractor and subcontractor are liable for unpaid wages if they violate the terms in paragraph (a) of this clause. In addition, the Contractor and subcontractor are liable for liquidated damages payable to the Government. The Contracting Officer will assess liquidated damages at the rate of $10 per affected employee for each calendar day on which the employer required or permitted the employee to work in excess of the standard workweek of 40 hours without paying overtime wages required by the Contract Work Hours and Safety Standards Act.

(c) Withholding for unpaid wages and liquidated damages. The Contracting Officer will withhold from payments due under the contract sufficient funds required to satisfy any Contractor or subcontractor liabilities for unpaid wages and liquidated damages. If amounts withheld under the contract are insufficient to satisfy Contractor or subcontractor liabilities, the Contracting Officer will withhold payments from other Federal or Federally assisted contracts held by the same Contractor that are subject to the Contract Work Hours and Safety Standards Act.

(d) Payrolls and basic records.

(1) The Contractor and its subcontractors shall maintain payrolls and basic payroll records for all laborers and mechanics working on the contract during the contract and shall make them available to the Government until 3 years after contract completion. The records shall contain the name and address of each employee, social security number, labor classifications, hourly rates of wages paid, daily and weekly number of hours worked, deductions made, and actual wages paid. The records need not duplicate those required for construction work by Department of Labor regulations at 29 CFR 5.5(a)(3) implementing the Davis-Bacon Act.

(2) The Contractor and its subcontractors shall allow authorized representatives of the Contracting Officer or the Department of Labor to inspect, copy, or transcribe records maintained under paragraph (d)(1) of this clause. The Contractor or subcontractor also shall allow authorized representatives of the Contracting Officer or Department of Labor to interview employees in the workplace during working hours.

(e) Subcontracts. The Contractor shall insert the provisions set forth in paragraphs (a) through (d) of this clause in subcontracts exceeding $100,000 and require subcontractors to include these provisions in any lower tier subcontracts. The Contractor shall be responsible for compliance by any subcontractor or lower-tier subcontractor with the provisions set forth in paragraphs (a) through (d) of this clause.

(End of clause)

52.222-6 DAVIS-BACON ACT (FEB 1995)

(a) All laborers and mechanics employed or working upon the site of the work will be paid unconditionally and not less often than once a week, and without subsequent deduction or rebate on any account (except such payroll deductions as are permitted by regulations issued by the Secretary of Labor under the Copeland Act (29 CFR Part 3), the full amount of wages and bona fide fringe benefits (or cash equivalents thereof) due at time of payment computed at rates not less than those contained in the wage determination of the Secretary of Labor which is attached hereto and made a part hereof, regardless of any contractual relationship which may be alleged to exist

between the Contractor and such laborers and mechanics. Contributions made or costs reasonably anticipated for bona fide fringe benefits under section 1(b)(2) of the Davis-Bacon Act on behalf of laborers or mechanics are considered wages paid to such laborers or mechanics, subject to the provisions of paragraph (d) of this clause; also, regular contributions made or costs incurred for more than a weekly period (but not less often than quarterly) under plans, funds, or programs which cover the particular weekly period, are deemed to be constructively made or incurred during such period. Such laborers and mechanics shall be paid not less than the appropriate wage rate and fringe benefits in the wage determination for the classification of work actually performed, without regard to skill, except as provided in the clause entitled Apprentices and Trainees. Laborers or mechanics performing work in more than one classification may be compensated at the rate specified for each classification for the time actually worked therein; provided, That the employer's payroll records accurately set forth the time spent in each classification in which work is performed. The wage determination (including any additional classifications and wage rates conformed under paragraph (b) of this clause) and the Davis-Bacon poster (WH-1321) shall be posted at all times by the Contractor and its subcontractors at the site of the work in a prominent and accessible place where it can be easily seen by the workers.

(b)(1) The Contracting Officer shall require that any class of laborers or mechanics which is not listed in the wage determination and which is to be employed under the contract shall be classified in conformance with the wage determination. The Contracting Officer shall approve an additional classification and wage rate and fringe benefits therefor only when all the following criteria have been met:

(i) The work to be performed by the classification requested is not performed by a classification in the wage determination.

(ii) The classification is utilized in the area by the construction industry.

(iii) The proposed wage rate, including any bona fide fringe benefits, bears a reasonable relationship to the wage rates contained in the wage determination.

(2) If the Contractor and the laborers and mechanics to be employed in the classification (if known), or their representatives, and the Contracting Officer agree on the classification and wage rate (including the amount designated for fringe benefits, where appropriate), a report of the action taken shall be sent by the Contracting Officer to the Administrator of the Wage and Hour Division, Employment Standards Administration, U.S. Department of Labor, Washington, DC 20210. The Administrator or an authorized representative will approve, modify, or disapprove every additional classification action within 30 days of receipt and so advise the Contracting Officer or will notify the Contracting Officer within the 30-day period that additional time is necessary.

(3) In the event the Contractor, the laborers or mechanics to be employed in the classification, or their representatives, and the Contracting Officer do not agree on the proposed classification and wage rate (including the amount designated for fringe benefits, where appropriate), the Contracting Officer shall refer the questions, including the views of all interested parties and the recommendation of the Contracting Officer, to the Administrator of the Wage and Hour Division for determination. The Administrator, or an authorized representative, will issue a determination within 30 days of receipt and so advise the Contracting Officer or will notify the Contracting Officer within the 30-day period that additional time is necessary.

(4) The wage rate (including fringe benefits, where appropriate) determined pursuant to subparagraphs (b)(2) and (b)(3) of this clause shall be paid to all workers performing work in the classification under this contract from the first day on which work is performed in the classification.

(c) Whenever the minimum wage rate prescribed in the contract for a class of laborers or mechanics includes a fringe benefit which is not expressed as an hourly rate, the Contractor shall either pay the benefit as stated in the wage determination or shall pay another bona fide fringe benefit or an hourly cash equivalent thereof.

(vi) If the Contractor does not make payments to a trustee or other third person, the Contractor may consider as part of the wages of any laborer or mechanic the amount of any costs reasonably anticipated in providing bona fide

fringe benefits under a plan or program; provided, That the Secretary of Labor has found, upon the written request of the Contractor, that the applicable standards of the Davis-Bacon Act have been met. The Secretary of Labor may require the Contractor to set aside in a separate account assets for the meeting of obligations under the plan or program.

(End of clause)

52.222-7 WITHHOLDING OF FUNDS (FEB 1988)

The Contracting Officer shall, upon his or her own action or upon written request of an authorized representative of the Department of Labor, withhold or cause to be withheld from the Contractor under this contract or any other Federal contract with the same Prime Contractor, or any other Federally assisted contract subject to Davis-Bacon prevailing wage requirements, which is held by the same Prime Contractor, so much of the accrued payments or advances as may be considered necessary to pay laborers and mechanics, including apprentices, trainees, and helpers, employed by the Contractor or any subcontractor the full amount of wages required by the contract. In the event of failure to pay any laborer or mechanic, including any apprentice, trainee, or helper, employed or working on the site of the work, all or part of the wages required by the contract, the Contracting Officer may, after written notice to the Contractor, take such action as may be necessary to cause the suspension of any further payment, advance, or guarantee of funds until such violations have ceased.

(End of clause)

52.222-8 PAYROLLS AND BASIC RECORDS (FEB 1988)

(a) Payrolls and basic records relating thereto shall be maintained by the Contractor during the course of the work and preserved for a period of 3 years thereafter for all laborers and mechanics working at the site of the work. Such records shall contain the name, address, and social security number of each such worker, his or her correct classification, hourly rates of wages paid (including rates of contributions or costs anticipated for bona fide fringe benefits or cash equivalents thereof of the types described in section 1(b)(2)(B) of the Davis-Bacon Act), daily and weekly number of hours worked, deductions made, and actual wages paid. Whenever the Secretary of Labor has found, under paragraph (d) of the clause entitled Davis-Bacon Act, that the wages of any laborer or mechanic include the amount of any costs reasonably anticipated in providing benefits under a plan or program described in section 1(b)(2)(B) of the Davis-Bacon Act, the Contractor shall maintain records which show that the commitment to provide such benefits is enforceable, that the plan or program is financially responsible, and that the plan or program has been communicated in writing to the laborers or mechanics affected, and records which show the costs anticipated or the actual cost incurred in providing such benefits. Contractors employing apprentices or trainees under approved programs shall maintain written evidence of the registration of apprenticeship programs and certification of trainee programs, the registration of the apprentices and trainees, and the ratios and wage rates prescribed in the applicable programs.

(b)(1) The Contractor shall submit weekly for each week in which any contract work is performed a copy of all payrolls to the Contracting Officer. The payrolls submitted shall set out accurately and completely all of the information required to be maintained under paragraph (a) of this clause. This information may be submitted in any form desired. Optional Form WH-347 (Federal Stock Number 029-005-00014-1) is available for this purpose and may be purchased from the Superintendent of Documents, U.S. Government Printing Office, Washington, DC 20402. The Prime Contractor is responsible for the submission of copies of payrolls by all subcontractors.

(2) Each payroll submitted shall be accompanied by a "Statement of Compliance," signed by the Contractor or subcontractor or his or her agent who pays or supervises the payment of the persons employed under the contract and shall certify--

(i) That the payroll for the payroll period contains the information required to be maintained under paragraph (a) of this clause and that such information is correct and complete;

(ii) That each laborer or mechanic (including each helper, apprentice, and trainee) employed on the contract during the payroll period has been paid the full weekly wages earned, without rebate, either directly or indirectly, and that no deductions have been made either directly or indirectly from the full wages earned, other than permissible deductions as set forth in the Regulations, 29 CFR Part 3; and

(iii) That each laborer or mechanic has been paid not less than the applicable wage rates and fringe benefits or cash equivalents for the classification of work performed, as specified in the applicable wage determination incorporated into the contract.

(3) The weekly submission of a properly executed certification set forth on the reverse side of Optional Form WH-347 shall satisfy the requirement for submission of the "Statement of Compliance" required by subparagraph (b)(2) of this clause.

(4) The falsification of any of the certifications in this clause may subject the Contractor or subcontractor to civil or criminal prosecution under Section 1001 of Title 18 and Section 3729 of Title 31 of the United States Code.

(c) The Contractor or subcontractor shall make the records required under paragraph (a) of this clause available for inspection, copying, or transcription by the Contracting Officer or authorized representatives of the Contracting Officer or the Department of Labor. The Contractor or subcontractor shall permit the Contracting Officer or representatives of the Contracting Officer or the Department of Labor to interview employees during working hours on the job. If the Contractor or subcontractor fails to submit required records or to make them available, the Contracting Officer may, after written notice to the Contractor, take such action as may be necessary to cause the suspension of any further payment. Furthermore, failure to submit the required records upon request or to make such records available may be grounds for debarment action pursuant to 29 CFR 5.12.

(End of clause)

52.222-9 APPRENTICES AND TRAINEES (FEB 1988)

(a) Apprentices. Apprentices will be permitted to work at less than the predetermined rate for the work they performed when they are employed pursuant to and individually registered in a bona fide apprenticeship program registered with the U.S. Department of Labor, Employment and Training Administration, Bureau of Apprenticeship and Training, or with a State Apprenticeship Agency recognized by the Bureau, or if a person is employed in his or her first 90 days of probationary employment as an apprentice in such an apprenticeship program, who is not individually registered in the program, but who has been certified by the Bureau of Apprenticeship and Training or a State Apprenticeship Agency (where appropriate) to be eligible for probationary employment as an apprentice. The allowable ratio of apprentices to journeymen on the job site in any craft classification shall not be greater than the ratio permitted to the Contractor as to the entire work force under the registered program. Any worker listed on a payroll at an apprentice wage rate, who is not registered or otherwise employed as stated in this paragraph, shall be paid not less than the applicable wage determination for the classification of work actually performed. In addition, any apprentice performing work on the job site in excess of the ratio permitted under the registered program shall be paid not less than the applicable wage rate on the wage determination for the work actually performed. Where a contractor is performing construction on a project in a locality other than that in which its program is registered, the ratios and wage rates (expressed in percentages of the journeyman's hourly rate) specified in the Contractor's or subcontractor's registered program shall be observed. Every apprentice must be paid at not less than the rate specified in the registered program for the apprentice's level of progress, expressed as a percentage of the journeyman hourly rate specified in the applicable wage determination. Apprentices shall be paid fringe benefits in accordance with the provisions of the apprenticeship program. If the apprenticeship program does not

specify fringe benefits, apprentices must be paid the full amount of fringe benefits listed on the wage determination for the applicable classification. If the Administrator determines that a different practice prevails for the applicable apprentice classification, fringes shall be paid in accordance with that determination. In the event the Bureau of Apprenticeship and Training, or a State Apprenticeship Agency recognized by the Bureau, withdraws approval of an apprenticeship program, the Contractor will no longer be permitted to utilize apprentices at less than the applicable predetermined rate for the work performed until an acceptable program is approved.

(b) Trainees. Except as provided in 29 CFR 5.16, trainees will not be permitted to work at less than the predetermined rate for the work performed unless they are employed pursuant to and individually registered in a program which has received prior approval, evidenced by formal certification by the U.S. Department of Labor, Employment and Training Administration. The ratio of trainees to journeymen on the job site shall not be greater than permitted under the plan approved by the Employment and Training Administration. Every trainee must be paid at not less than the rate specified in the approved program for the trainee's level of progress, expressed as a percentage of the journeyman hourly rate specified in the applicable wage determination. Trainees shall be paid fringe benefits in accordance with the provisions of the trainee program. If the trainee program does not mention fringe benefits, trainees shall be paid the full amount of fringe benefits listed in the wage determination unless the Administrator of the Wage and Hour Division determines that there is an apprenticeship program associated with the corresponding journeyman wage rate in the wage determination which provides for less than full fringe benefits for apprentices. Any employee listed on the payroll at a trainee rate who is not registered and participating in a training plan approved by the Employment and Training Administration shall be paid not less than the applicable wage rate in the wage determination for the classification of work actually performed. In addition, any trainee performing work on the job site in excess of the ratio permitted under the registered program shall be paid not less than the applicable wage rate in the wage determination for the work actually performed. In the event the Employment and Training Administration withdraws approval of a training program, the Contractor will no longer be permitted to utilize trainees at less than the applicable predetermined rate for the work performed until an acceptable program is approved.

(c) Equal employment opportunity. The utilization of apprentices, trainees, and journeymen under this clause shall be in conformity with the equal employment opportunity requirements of Executive Order 11246, as amended, and 29 CFR Part 30.

(End of clause)

52.222-10 COMPLIANCE WITH COPELAND ACT REQUIREMENTS (FEB 1988)

The Contractor shall comply with the requirements of 29 CFR Part 3, which are hereby incorporated by reference in this contract.

(End of clause)

52.222-11 SUBCONTRACTS (LABOR STANDARDS (FEB 1988)

(a) The Contractor or subcontractor shall insert in any subcontracts the clauses entitled Davis-Bacon Act, Contract Work Hours and Safety Standards Act-Overtime Compensation, Apprentices and Trainees, Payrolls and Basic Records, Compliance with Copeland Act Requirements, Withholding of Funds, Subcontracts (Labor Standards), Contract Termination-Debarment, Disputes Concerning Labor Standards, Compliance with Davis-Bacon and Related Act Regulations, and Certification of Eligibility, and such other clauses as the Contracting Officer may, by appropriate instructions, require, and also a clause requiring subcontractors to include these clauses in any lower tier subcontracts. The Prime Contractor shall be responsible for compliance by any subcontractor or lower tier subcontractor with all the contract clauses cited in this paragraph.

(b)(1) Within 14 days after award of the contract, the Contractor shall deliver to the Contracting Officer a completed Statement and Acknowledgment Form (SF 1413) for each subcontract, including the subcontractor's signed and dated acknowledgment that the clauses set forth in paragraph (a) of this clause have been included in the subcontract.

(ii) Within 14 days after the award of any subsequently awarded subcontract the Contractor shall deliver to the Contracting Officer an updated completed SF 1413 for such additional subcontract.

(End of clause)

52.222-13 COMPLIANCE WITH DAVIS-BACON AND RELATED ACT REGULATIONS (FEB 1988)

All rulings and interpretations of the Davis-Bacon and Related Acts contained in 29 CFR Parts 1, 3, and 5 are hereby incorporated by reference in this contract.

(End of clause)

52.222-14 DISPUTES CONCERNING LABOR STANDARDS (FEB 1988)

The United States Department of Labor has set forth in 29 CFR Parts 5, 6, and 7 procedures for resolving disputes concerning labor standards requirements. Such disputes shall be resolved in accordance with those procedures and not the Disputes clause of this contract. Disputes within the meaning of this clause include disputes between the Contractor (or any of its subcontractors) and the contracting agency, the U.S. Department of Labor, or the employees or their representatives.

(End of clause)

52.222-15 CERTIFICATION OF ELIGIBILITY (FEB 1988)

(a) By entering into this contract, the Contractor certifies that neither it (nor he or she) nor any person or firm who has an interest in the Contractor's firm is a person or firm ineligible to be awarded Government contracts by virtue of section 3(a) of the Davis-Bacon Act or 29 CFR 5.12(a)(1).

(b) No part of this contract shall be subcontracted to any person or firm ineligible for award of a Government contract by virtue of section 3(a) of the Davis-Bacon Act or 29 CFR 5.12(a)(1).

(vii) The penalty for making false statements is prescribed in the U.S. Criminal Code, 18 U.S.C. 1001.

(End of clause)

52.222-21 PROHIBITION OF SEGREGATED FACILITIES (FEB 1999)

(a) Segregated facilities, as used in this clause, means any waiting rooms, work areas, rest rooms and wash rooms, restaurants and other eating areas, time clocks, locker rooms and other storage or dressing areas, parking lots, drinking fountains, recreation or entertainment areas, transportation, and housing facilities provided for employees,

that are segregated by explicit directive or are in fact segregated on the basis of race, color, religion, sex, or national origin because of written or oral policies or employee custom. The term does not include separate or single-user rest rooms or necessary dressing or sleeping areas provided to assure privacy between the sexes.

(b) The Contractor agrees that it does not and will not maintain or provide for its employees any segregated facilities at any of its establishments, and that it does not and will not permit its employees to perform their services at any location under its control where segregated facilities are maintained. The Contractor agrees that a breach of this clause is a violation of the Equal Opportunity clause in this contract.

(c) The Contractor shall include this clause in every subcontract and purchase order that is subject to the Equal Opportunity clause of this contract.

(End of clause)

52.222-26 EQUAL OPPORTUNITY (APR 2002)

(a) Definition. United States, as used in this clause, means the 50 States, the District of Columbia, Puerto Rico, the Northern Mariana Islands, American Samoa, Guam, the U.S. Virgin Islands, and Wake Island.

(b) If, during any 12-month period (including the 12 months preceding the award of this contract), the Contractor has been or is awarded nonexempt Federal contracts and/or subcontracts that have an aggregate value in excess of $10,000, the Contractor shall comply with paragraphs (b)(1) through (b)(11) of this clause, except for work performed outside the United States by employees who were not recruited within the United States. Upon request, the Contractor shall provide information necessary to determine the applicability of this clause.

(1) The Contractor shall not discriminate against any employee or applicant for employment because of race, color, religion, sex, or national origin. However, it shall not be a violation of this clause for the Contractor to extend a publicly announced preference in employment to Indians living on or near an Indian reservation, in connection with employment opportunities on or near an Indian reservation, as permitted by 41 CFR 60-1.5.

(2) The Contractor shall take affirmative action to ensure that applicants are employed, and that employees are treated during employment, without regard to their race, color, religion, sex, or national origin. This shall include, but not be limited to, (i) employment, (ii) upgrading, (iii) demotion, (iv) transfer, (v) recruitment or recruitment advertising, (vi) layoff or termination, (vii) rates of pay or other forms of compensation, and (viii) selection for training, including apprenticeship.

(3) The Contractor shall post in conspicuous places available to employees and applicants for employment the notices to be provided by the Contracting Officer that explain this clause.

(4) The Contractor shall, in all solicitations or advertisements for employees placed by or on behalf of the Contractor, state that all qualified applicants will receive consideration for employment without regard to race, color, religion, sex, or national origin.

(5) The Contractor shall send, to each labor union or representative of workers with which it has a collective bargaining agreement or other contract or understanding, the notice to be provided by the Contracting Officer advising the labor union or workers' representative of the Contractor's commitments under this clause, and post copies of the notice in conspicuous places available to employees and applicants for employment.

(6) The Contractor shall comply with Executive Order 11246, as amended, and the rules, regulations, and orders of the Secretary of Labor.

(7) The Contractor shall furnish to the contracting agency all information required by Executive Order 11246, as amended, and by the rules, regulations, and orders of the Secretary of Labor. The Contractor shall also file Standard Form 100 (EEO-1), or any successor form, as prescribed in 41 CFR part 60-1. Unless the Contractor has filed within the 12 months preceding the date of contract award, the Contractor shall, within 30 days after contract award, apply to either the regional Office of Federal Contract Compliance Programs (OFCCP) or the local office of the Equal Employment Opportunity Commission for the necessary forms.

(8) The Contractor shall permit access to its premises, during normal business hours, by the contracting agency or the OFCCP for the purpose of conducting on-site compliance evaluations and complaint investigations. The Contractor shall permit the Government to inspect and copy any books, accounts, records (including computerized records), and other material that may be relevant to the matter under investigation and pertinent to compliance with Executive Order 11246, as amended, and rules and regulations that implement the Executive Order.

(9) If the OFCCP determines that the Contractor is not in compliance with this clause or any rule, regulation, or order of the Secretary of Labor, this contract may be canceled, terminated, or suspended in whole or in part and the Contractor may be declared ineligible for further Government contracts, under the procedures authorized in Executive Order 11246, as amended. In addition, sanctions may be imposed and remedies invoked against the Contractor as provided in Executive Order 11246, as amended; in the rules, regulations, and orders of the Secretary of Labor; or as otherwise provided by law.

(10) The Contractor shall include the terms and conditions of subparagraphs (b)(1) through (11) of this clause in every subcontract or purchase order that is not exempted by the rules, regulations, or orders of the Secretary of Labor issued under Executive Order 11246, as amended, so that these terms and conditions will be binding upon each subcontractor or vendor.

(11) The Contractor shall take such action with respect to any subcontract or purchase order as the contracting officer may direct as a means of enforcing these terms and conditions, including sanctions for noncompliance; provided, that if the Contractor becomes involved in, or is threatened with, litigation with a subcontractor or vendor as a result of any direction, the Contractor may request the United States to enter into the litigation to protect the interests of the United States.

(c) Notwithstanding any other clause in this contract, disputes relative to this clause will be governed by the procedures in 41 CFR 60-1.1.

(End of clause)

52.222-27 AFFIRMATIVE ACTION COMPLIANCE REQUIREMENTS FOR CONSTRUCTION (FEB 1999)

(a) Definitions. "Covered area," as used in this clause, means the geographical area described in the solicitation for this contract.

"Deputy Assistant Secretary," as used in this clause, means Deputy Assistant Secretary for Federal Contract Compliance, U.S. Department of Labor, or a designee.

"Employer's identification number," as used in this clause, means the Federal Social Security number used on the employer's quarterly federal tax return, U.S. Treasury Department Form 941.

"Minority," as used in this clause, means--

(1) American Indian or Alaskan Native (all persons having origins in any of the original peoples of North America and maintaining identifiable tribal affiliations through membership and participation or community identification).

(2) Asian and Pacific Islander (all persons having origins in any of the original peoples of the Far East, Southeast Asia, the Indian Subcontinent, or the Pacific Islands);

(3) Black (all persons having origins in any of the black African racial groups not of Hispanic origin); and

(4) Hispanic (all persons of Mexican, Puerto Rican, Cuban, Central or South American, or other Spanish culture or origin, regardless of race).

(b) If the Contractor, or a subcontractor at any tier, subcontracts a portion of the work involving any construction trade, each such subcontract in excess of $10,000 shall include this clause and the Notice containing the goals for minority and female participation stated in the solicitation for this contract.

(c) If the Contractor is participating in a Hometown Plan (41 CFR 60-4) approved by the U.S. Department of Labor in a covered area, either individually or through an association, its affirmative action obligations on all work in the plan area (including goals) shall comply with the plan for those trades that have unions participating in the plan. Contractors must be able to demonstrate participation in, and compliance with, the provisions of the plan. Each Contractor or subcontractor participating in an approved plan is also required to comply with its obligations under the Equal Opportunity clause, and to make a good faith effort to achieve each goal under the plan in each trade in which it has employees. The overall good-faith performance by other Contractors or subcontractors toward a goal in an approved plan does not excuse any Contractor's or subcontractor's failure to make good-faith efforts to achieve the plan's goals.

(d) The Contractor shall implement the affirmative action procedures in subparagraphs (g)(1) through (16) of this clause. The goals stated in the solicitation for this contract are expressed as percentages of the total hours of employment and training of minority and female utilization that the Contractor should reasonably be able to achieve in each construction trade in which it has employees in the covered area. If the Contractor performs construction work in a geographical area located outside of the covered area, it shall apply the goals established for the geographical area where that work is actually performed. The Contractor is expected to make substantially uniform progress toward its goals in each craft.

(e) Neither the terms and conditions of any collective bargaining agreement, nor the failure by a union with which the Contractor has a collective bargaining agreement, to refer minorities or women shall excuse the Contractor's obligations under this clause, Executive Order 11246, as amended, or the regulations thereunder.

(f) In order for the nonworking training hours of apprentices and trainees to be counted in meeting the goals, apprentices and trainees must be employed by the Contractor during the training period, and the Contractor must have made a commitment to employ the apprentices and trainees at the completion of their training, subject to the availability of employment opportunities. Trainees must be trained pursuant to training programs approved by the U.S. Department of Labor.

(g) The Contractor shall take affirmative action to ensure equal employment opportunity. The evaluation of the Contractor's compliance with this clause shall be based upon its effort to achieve maximum results from its actions. The Contractor shall document these efforts fully and implement affirmative action steps at least as extensive as the following:

(1) Ensure a working environment free of harassment, intimidation, and coercion at all sites and in all facilities where the Contractor's employees are assigned to work. The Contractor, if possible, will assign two or more women to each construction project. The Contractor shall ensure that foremen, superintendents, and other onsite supervisory personnel are aware of and carry out the Contractor's obligation to maintain such a working environment, with specific attention to minority or female individuals working at these sites or facilities.

(2) Establish and maintain a current list of sources for minority and female recruitment. Provide written notification to minority and female recruitment sources and community organizations when the Contractor or its unions have employment opportunities available, and maintain a record of the organizations' responses.

(3) Establish and maintain a current file of the names, addresses, and telephone numbers of each minority and female off-the-street applicant, referrals of minorities or females from unions, recruitment sources, or community organizations, and the action taken with respect to each individual. If an individual was sent to the union hiring hall for referral and not referred back to the Contractor by the union or, if referred back, not employed by the Contractor, this shall be documented in the file, along with whatever additional actions the Contractor may have taken.

(4) Immediately notify the Deputy Assistant Secretary when the union or unions with which the Contractor has a collective bargaining agreement has not referred back to the Contractor a minority or woman sent by the Contractor, or when the Contractor has other information that the union referral process has impeded the Contractor's efforts to meet its obligations.

(5) Develop on-the-job training opportunities and/or participate in training programs for the area that expressly include minorities and women, including upgrading programs and apprenticeship and trainee programs relevant to the Contractor's employment needs, especially those programs funded or approved by the Department of Labor. The Contractor shall provide notice of these programs to the sources compiled under subparagraph (g)(2) of this clause.

(6) Disseminate the Contractor's equal employment policy by--

(i) Providing notice of the policy to unions and to training, recruitment, and outreach programs, and requesting their cooperation in assisting the Contractor in meeting its contract obligations;

(ii) Including the policy in any policy manual and in collective bargaining agreements;

(iii) Publicizing the policy in the company newspaper, annual report, etc.;

(iv) Reviewing the policy with all management personnel and with all minority and female employees at least once a year; and

(v) Posting the policy on bulletin boards accessible to employees at each location where construction work is performed.

(7) Review, at least annually, the Contractor's equal employment policy and affirmative action obligations with all employees having responsibility for hiring, assignment, layoff, termination, or other employment decisions. Conduct review of this policy with all on-site supervisory personnel before initiating construction work at a job site. A written record shall be made and maintained identifying the time and place of these meetings, persons attending, subject matter discussed, and disposition of the subject matter.

(8) Disseminate the Contractor's equal employment policy externally by including it in any advertising in the news media, specifically including minority and female news media. Provide written notification to, and discuss this policy with, other Contractors and subcontractors with which the Contractor does or anticipates doing business.

(9) Direct recruitment efforts, both oral and written, to minority, female, and community organizations, to schools with minority and female students, and to minority and female recruitment and training organizations serving the Contractor's recruitment area and employment needs. Not later than 1 month before the date for acceptance of applications for apprenticeship or training by any recruitment source, send written notification to organizations such as the above, describing the openings, screening procedures, and tests to be used in the selection process.

(10) Encourage present minority and female employees to recruit minority persons and women. Where reasonable, provide after-school, summer, and vacation employment to minority and female youth both on the site and in other areas of the Contractor's workforce.

(11) Validate all tests and other selection requirements where required under 41 CFR 60-3.

(12) Conduct, at least annually, an inventory and evaluation at least of all minority and female personnel for promotional opportunities. Encourage these employees to seek or to prepare for, through appropriate training, etc., opportunities for promotion.

(13) Ensure that seniority practices, job classifications, work assignments, and other personnel practices do not have a discriminatory effect by continually monitoring all personnel and employment-related activities to ensure that the Contractor's obligations under this contract are being carried out.

(14) Ensure that all facilities and company activities are nonsegregated except that separate or single-user rest rooms and necessary dressing or sleeping areas shall be provided to assure privacy between the sexes.

(15) Maintain a record of solicitations for subcontracts for minority and female construction contractors and suppliers, including circulation of solicitations to minority and female contractor associations and other business associations.

(16) Conduct a review, at least annually, of all supervisors' adherence to and performance under the Contractor's equal employment policy and affirmative action obligations.

(h) The Contractor is encouraged to participate in voluntary associations that may assist in fulfilling one or more of the affirmative action obligations contained in subparagraphs (g)(1) through (16) of this clause. The efforts of a contractor association, joint contractor-union, contractor-community, or similar group of which the contractor is a member and participant may be asserted as fulfilling one or more of its obligations under subparagraphs (g)(1) through (16) of this clause, provided the Contractor--

(1) Actively participates in the group;

(2) Makes every effort to ensure that the group has a positive impact on the employment of minorities and women in the industry;

(3) Ensures that concrete benefits of the program are reflected in the Contractor's minority and female workforce participation;

(4) Makes a good-faith effort to meet its individual goals and timetables; and

(5) Can provide access to documentation that demonstrates the effectiveness of actions taken on behalf of the Contractor. The obligation to comply is the Contractor's, and failure of such a group to fulfill an obligation shall not be a defense for the Contractor's noncompliance.

(i) A single goal for minorities and a separate single goal for women shall be established. The Contractor is required to provide equal employment opportunity and to take affirmative action for all minority groups, both male and female, and all women, both minority and nonminority. Consequently, the Contractor may be in violation of Executive Order 11246, as amended, if a particular group is employed in a substantially disparate manner.

(j) The Contractor shall not use goals or affirmative action standards to discriminate against any person because of race, color, religion, sex, or national origin.

(k) The Contractor shall not enter into any subcontract with any person or firm debarred from Government contracts under Executive Order 11246, as amended.

(l) The Contractor shall carry out such sanctions and penalties for violation of this clause and of the Equal Opportunity clause, including suspension, termination, and cancellation of existing subcontracts, as may be imposed or ordered under Executive Order 11246, as amended, and its implementing regulations, by the OFCCP. Any failure to carry out these sanctions and penalties as ordered shall be a violation of this clause and Executive Order 11246,

as amended.

(m) The Contractor in fulfilling its obligations under this clause shall implement affirmative action procedures at least as extensive as those prescribed in paragraph (g) of this clause, so as to achieve maximum results from its efforts to ensure equal employment opportunity. If the Contractor fails to comply with the requirements of Executive Order 11246, as amended, the implementing regulations, or this clause, the Deputy Assistant Secretary shall take action as prescribed in 41 CFR 60-4.8.

(n) The Contractor shall designate a responsible official to--

(1) Monitor all employment-related activity to ensure that the Contractor's equal employment policy is being carried out;

(2) Submit reports as may be required by the Government; and

(3) Keep records that shall at least include for each employee the name, address, telephone number, construction trade, union affiliation (if any), employee identification number, social security number, race, sex, status (e.g., mechanic, apprentice, trainee, helper, or laborer), dates of changes in status, hours worked per week in the indicated trade, rate of pay, and locations at which the work was performed. Records shall be maintained in an easily understandable and retrievable form; however, to the degree that existing records satisfy this requirement, separate records are not required to be maintained.

Nothing contained herein shall be construed as a limitation upon the application of other laws that establish different standards of compliance or upon the requirements for the hiring of local or other area residents (e.g., those under the Public Works Employment Act of 1977 and the Community Development Block Grant Program).

(End of clause)

52.222-36 AFFIRMATIVE ACTION FOR WORKERS WITH DISABILITIES (JUN 1998)

(a) General. (1) Regarding any position for which the employee or applicant for employment is qualified, the Contractor shall not discriminate against any employee or applicant because of physical or mental disability. The Contractor agrees to take affirmative action to employ, advance in employment, and otherwise treat qualified individuals with disabilities without discrimination based upon their physical or mental disability in all employment practices such as--

(i) Recruitment, advertising, and job application procedures;

(ii) Hiring, upgrading, promotion, award of tenure, demotion, transfer, layoff, termination, right of return from layoff, and rehiring;

(iii) Rates of pay or any other form of compensation and changes in compensation;

(iv) Job assignments, job classifications, organizational structures, position descriptions, lines of progression, and seniority lists;

(v) Leaves of absence, sick leave, or any other leave;

(vi) Fringe benefits available by virtue of employment, whether or not administered by the Contractor;

(vii) Selection and financial support for training, including apprenticeships, professional meetings, conferences, and other related activities, and selection for leaves of absence to pursue training;

(viii) Activities sponsored by the Contractor, including social or recreational programs; and

(ix) Any other term, condition, or privilege of employment.

(2) The Contractor agrees to comply with the rules, regulations, and relevant orders of the Secretary of Labor (Secretary) issued under the Rehabilitation Act of 1973 (29 U.S.C. 793) (the Act), as amended.

(b) Postings. (1) The Contractor agrees to post employment notices stating--

(i) The Contractor's obligation under the law to take affirmative action to employ and advance in employment qualified individuals with disabilities; and

(ii) The rights of applicants and employees.

(2) These notices shall be posted in conspicuous places that are available to employees and applicants for employment. The Contractor shall ensure that applicants and employees with disabilities are informed of the contents of the notice (e.g., the Contractor may have the notice read to a visually disabled individual, or may lower the posted notice so that it might be read by a person in a wheelchair). The notices shall be in a form prescribed by the Deputy Assistant Secretary for Federal Contract Compliance of the U.S. Department of Labor (Deputy Assistant Secretary) and shall be provided by or through the Contracting Officer.

(3) The Contractor shall notify each labor union or representative of workers with which it has a collective bargaining agreement or other contract understanding, that the Contractor is bound by the terms of Section 503 of the Act and is committed to take affirmative action to employ, and advance in employment, qualified individuals with physical or mental disabilities.

(c) Noncompliance. If the Contractor does not comply with the requirements of this clause, appropriate actions may be taken under the rules, regulations, and relevant orders of the Secretary issued pursuant to the Act.

(d) Subcontracts. The Contractor shall include the terms of this clause in every subcontract or purchase order in excess of $10,000 unless exempted by rules, regulations, or orders of the Secretary. The Contractor shall act as specified by the Deputy Assistant Secretary to enforce the terms, including action for noncompliance.

(End of clause)

52.223-3 HAZARDOUS MATERIAL IDENTIFICATION AND MATERIAL SAFETY DATA (JAN 1997)

(a) "Hazardous material", as used in this clause, includes any material defined as hazardous under the latest version of Federal Standard No. 313 (including revisions adopted during the term of the contract).

(b) The offeror must list any hazardous material, as defined in paragraph (a) of this clause, to be delivered under this contract. The hazardous material shall be properly identified and include any applicable identification number, such as National Stock Number or Special Item Number. This information shall also be included on the Material Safety Data Sheet submitted under this contract.

| Material (If none, insert "None") | Identification No. |
|---|---|
| _____ | _____ |
| _____ | _____ |

_____ _____

(c) This list must be updated during performance of the contract whenever the Contractor determines that any other material to be delivered under this contract is hazardous.

(d) The apparently successful offeror agrees to submit, for each item as required prior to award, a Material Safety Data Sheet, meeting the requirements of 29 CFR 1910.1200(g) and the latest version of Federal Standard No. 313, for all hazardous material identified in paragraph (b) of this clause. Data shall be submitted in accordance with Federal Standard No. 313, whether or not the apparently successful offeror is the actual manufacturer of these items. Failure to submit the Material Safety Data Sheet prior to award may result in the apparently successful offeror being considered nonresponsible and ineligible for award.

(e) If, after award, there is a change in the composition of the item(s) or a revision to Federal Standard No. 313, which renders incomplete or inaccurate the data submitted under paragraph (d) of this clause, the Contractor shall promptly notify the Contracting Officer and resubmit the data.

(f) Neither the requirements of this clause nor any act or failure to act by the Government shall relieve the Contractor of any responsibility or liability for the safety of Government, Contractor, or subcontractor personnel or property.

(g) Nothing contained in this clause shall relieve the Contractor from complying with applicable Federal, State, and local laws, codes, ordinances, and regulations (including the obtaining of licenses and permits) in connection with hazardous material.

(h) The Government's rights in data furnished under this contract with respect to hazardous material are as follows:

(1) To use, duplicate and disclose any data to which this clause is applicable. The purposes of this right are to--

(i) Apprise personnel of the hazards to which they may be exposed in using, handling, packaging, transporting, or disposing of hazardous materials;

(ii) Obtain medical treatment for those affected by the material; and

(iii) Have others use, duplicate, and disclose the data for the Government for these purposes.

(2) To use, duplicate, and disclose data furnished under this clause, in accordance with subparagraph (h)(1) of this clause, in precedence over any other clause of this contract providing for rights in data.

(3) The Government is not precluded from using similar or identical data acquired from other sources.

(End of clause)

52.223-6 DRUG-FREE WORKPLACE (MAY 2001)

(a) Definitions. As used in this clause --

"Controlled substance" means a controlled substance in schedules I through V of section 202 of the Controlled Substances Act (21 U.S.C. 812) and as further defined in regulation at 21 CFR 1308.11 - 1308.15.

"Conviction" means a finding of guilt (including a plea of nolo contendere) or imposition of sentence, or both, by any judicial body charged with the responsibility to deter- mine violations of the Federal or State criminal drug statutes.

"Criminal drug statute" means a Federal or non-Federal criminal statute involving the manufacture, distribution, dispensing, possession, or use of any controlled substance.

"Drug-free workplace" means the site(s) for the performance of work done by the Contractor in connection with a specific contract at which employees of the Contractor are prohibited from engaging in the unlawful manufacture, distribution, dispensing, possession, or use of a controlled substance.

"Employee" means an employee of a Contractor directly engaged in the performance of work under a Government contract. "Directly engaged" is defined to include all direct cost employees and any other Contractor employee who has other than a minimal impact or involvement in contract performance.

"Individual" means an offeror/contractor that has no more than one employee including the offeror/contractor.

(b) The Contractor, if other than an individual, shall-- within 30 days after award (unless a longer period is agreed to in writing for contracts of 30 days or more performance duration), or as soon as possible for contracts of less than 30 days performance duration--

(1) Publish a statement notifying its employees that the unlawful manufacture, distribution, dispensing, possession, or use of a controlled substance is prohibited in the Contractor's workplace and specifying the actions that will be taken against employees for violations of such prohibition;

(2) Establish an ongoing drug-free awareness program to inform such employees about--

(i) The dangers of drug abuse in the workplace;

(ii) The Contractor's policy of maintaining a drug-free workplace;

(iii) Any available drug counseling, rehabilitation, and employee assistance programs; and

(iv) The penalties that may be imposed upon employees for drug abuse violations occurring in the workplace;

(3) Provide all employees engaged in performance of the contract with a copy of the statement required by subparagraph (b)(1) of this clause;

(4) Notify such employees in writing in the statement required by subparagraph (b)(1) of this clause that, as a condition of continued employment on this contract, the employee will--

(i) Abide by the terms of the statement; and

(ii) Notify the employer in writing of the employee's conviction under a criminal drug statute for a violation occurring in the workplace no later than 5 days after such conviction.

(5) Notify the Contracting Officer in writing within 10 days after receiving notice under subdivision (b)(4)(ii) of this clause, from an employee or otherwise receiving actual notice of such conviction. The notice shall include the position title of the employee;

(6) Within 30 days after receiving notice under subdivision (b)(4)(ii) of this clause of a conviction, take one of the following actions with respect to any employee who is convicted of a drug abuse violation occurring in the workplace:

(i) Taking appropriate personnel action against such employee, up to and including termination; or

(ii) Require such employee to satisfactorily participate in a drug abuse assistance or rehabilitation program approved

for such purposes by a Federal, State, or local health, law enforcement, or other appropriate agency; and

(7) Make a good faith effort to maintain a drug-free workplace through implementation of subparagraphs (b)(1) though (b)(6) of this clause.

(c) The Contractor, if an individual, agrees by award of the contract or acceptance of a purchase order, not to engage in the unlawful manufacture, distribution, dispensing, possession, or use of a controlled substance while performing this contract.

(d) In addition to other remedies available to the Government, the Contractor's failure to comply with the requirements of paragraph (b) or (c) of this clause may, pursuant to FAR 23.506, render the Contractor subject to suspension of contract payments, termination of the contract for default, and suspension or debarment.

(End of clause)

52.225-11 BUY AMERICAN ACT--CONSTRUCTION MATERIALS UNDER TRADE AGREEMENTS (JUN 2004)

(a) Definitions. As used in this clause--

Component means an article, material, or supply incorporated directly into a construction material.

Construction material means an article, material, or supply brought to the construction site by the Contractor or subcontractor for incorporation into the building or work. The term also includes an item brought to the site preassembled from articles, materials, or supplies. However, emergency life safety systems, such as emergency lighting, fire alarm, and audio evacuation systems, that are discrete systems incorporated into a public building or work and that are produced as complete systems, are evaluated as a single and distinct construction material regardless of when or how the individual parts or components of those systems are delivered to the construction site. Materials purchased directly by the Government are supplies, not construction material.

Cost of components means--

(1) For components purchased by the Contractor, the acquisition cost, including transportation costs to the place of incorporation into the construction material (whether or not such costs are paid to a domestic firm), and any applicable duty (whether or not a duty-free entry certificate is issued); or

(2) For components manufactured by the Contractor, all costs associated with the manufacture of the component, including transportation costs as described in paragraph (1) of this definition, plus allocable overhead costs, but excluding profit. Cost of components does not include any costs associated with the manufacture of the end product.

Designated country means any of the following countries: Aruba, Austria, Bangladesh, Belgium, Benin, Bhutan, Botswana, Burkina Faso, Burundi, Canada, Cape Verde, Central African Republic, Chad, Comoros, Cyprus, Czech Republic, Denmark. Djibouti, Equatorial Guinea, Estonia, Finland, France, Gambia, Germany, Greece, Guinea, Guinea-Bissau, Haiti, Hong Kong, Hungary, Ireland, Israel, Italy, Japan. Kiribati, Korea, Republic of, Lativia, Lesotho, Liechtenstein, Lithuania, Luxembourg, Malawi, Maldives, Mali, Malta, Mozambique, Nepal, Netherlands, Niger, Norway, Poland, Portugal, Rwanda. Sao Tome and Principe, Sierra Leone, Singapore, Slovak Republic, Slovenia, Somalia, Spain, Sweden, Switzerland, Tanzania U.R., Togo, Tuvalu, Uganda, United Kingdom, Vanuatu, Western Samoa, Yemen.

Designated country construction material means a construction material that--

(1) Is wholly the growth, product, or manufacture of a designated country; or

(2) In the case of a construction material that consists in whole or in part of materials from another country, has been substantially transformed in a designated country into a new and different construction material distinct from the materials from which it was transformed.

Domestic construction material means--

(1) An unmanufactured construction material mined or produced in the United States; or

(2) A construction material manufactured in the United States, if the cost of its components mined, produced, or manufactured in the United States exceeds 50 percent of the cost of all its components. Components of foreign origin of the same class or kind for which nonavailability determinations have been made are treated as domestic.

Foreign construction material means a construction material other than a domestic construction material.

Free Trade Agreement country means Canada, Chile, Mexico, or Singapore.

Free Trade Agreement country construction material means a construction material that--

(1) Is wholly the growth, product, or manufacture of a Free Trade Agreement (FTA) country; or

(2) In the case of a construction material that consists in whole or in part of materials from another country, has been substantially transformed in a FTA country into a new and different construction material distinct from the materials from which it was transformed.

United States means the 50 States, the District of Columbia, and outlying areas.

(b) Construction materials. (1) This clause implements the Buy American Act (41 U.S.C. 10a-10d) by providing a preference for domestic construction material. In addition, the Contracting Officer has determined that the Trade Agreements Act and Free Trade Agreements (FTAs) apply to this acquisition. Therefore, the Buy American Act restrictions are waived for designated country and FTA country construction materials.

(2) The Contractor shall use only domestic, designated country, or NAFTA country construction material in performing this contract, except as provided in paragraphs (b)(3) and (b)(4) of this clause.

(3) The requirement in paragraph (b)(2) of this clause does not apply to the construction materials or components listed by the Government as follows: NONE

(4) The Contracting Officer may add other foreign construction material to the list in paragraph (b)(3) of this clause if the Government determines that--

(i) The cost of domestic construction material would be unreasonable. The cost of a particular domestic construction material subject to the restrictions of the Buy American Act is unreasonable when the cost of such material exceeds the cost of foreign material by more than 6 percent;

(ii) The application of the restriction of the Buy American Act to a particular construction material would be impracticable or inconsistent with the public interest; or

(iii) The construction material is not mined, produced, or manufactured in the United States in sufficient and reasonably available commercial quantities of a satisfactory quality.

(c) Request for determination of inapplicability of the Buy American Act.

(1)(i) Any Contractor request to use foreign construction material in accordance with paragraph (b)(4) of this clause shall include adequate information for Government evaluation of the request, including--

(A) A description of the foreign and domestic construction materials;

(B) Unit of measure;

(C) Quantity;

(D) Price;

(E) Time of delivery or availability;

(F) Location of the construction project;

(G) Name and address of the proposed supplier; and

(H) A detailed justification of the reason for use of foreign construction materials cited in accordance with paragraph (b)(3) of this clause.

(ii) A request based on unreasonable cost shall include a reasonable survey of the market and a completed price comparison table in the format in paragraph (d) of this clause.

(iii) The price of construction material shall include all delivery costs to the construction site and any applicable duty (whether or not a duty-free certificate may be issued).

(iv) Any Contractor request for a determination submitted after contract award shall explain why the Contractor could not reasonably foresee the need for such determination and could not have requested the determination before contract award. If the Contractor does not submit a satisfactory explanation, the Contracting Officer need not make a determination.

(2) If the Government determines after contract award that an exception to the Buy American Act applies and the Contracting Officer and the Contractor negotiate adequate consideration, the Contracting Officer will modify the contract to allow use of the foreign construction material. However, when the basis for the exception is the unreasonable price of a domestic construction material, adequate consideration is not less than the differential established in paragraph (b)(4)(i) of this clause.

(3) Unless the Government determines that an exception to the Buy American Act applies, use of foreign construction material is noncompliant with the Buy American Act.

(d) Data. To permit evaluation of requests under paragraph (c) of this clause based on unreasonable cost, the Contractor shall include the following information and any applicable supporting data based on the survey of suppliers:

Foreign and Domestic Construction Materials Price Comparison

| Construction material description | Unit of measure | Quantity | Price (dollars) \1\ |
|---|---|---|---|
| Item 1: | | | |
| Foreign construction material.... | ..... | ..... | ..... |
| Domestic construction material... | ..... | ..... | ..... |
| Item 2: | | | |
| Foreign construction material.... | ..... | ..... | ..... |
| Domestic construction material... | ..... | ..... | ..... |

\1\ Include all delivery costs to the construction site and any applicable duty (whether or not a duty-free

entry certificate is issued).
List name, address, telephone number, and contact for suppliers surveyed. Attach copy of response; if oral, attach summary.
Include other applicable supporting information.

(e) United States law will apply to resolve any claim of breach of this contract.

(End of clause)

52.226-1 UTILIZATION OF INDIAN ORGANIZATIONS AND INDIAN-OWNED ECONOMIC ENTERPRISES (JUN 2000)

(a) Definitions. As used in this clause:

"Indian" means any person who is a member of any Indian tribe, band, group, pueblo or community that is recognized by the Federal Government as eligible for services from the Bureau of Indian Affairs (BIA) in accordance with 25 U.S.C. 1452(c) and any ``Native" as defined in the Alaska Native Claims Settlement Act (43 U.S.C. 1601).

"Indian organization" means the governing body of any Indian tribe or entity established or recognized by the governing body of an Indian tribe for the purposes of 25 U.S.C., chapter 17.

"Indian-owned economic enterprise" means any Indian-owned (as determined by the Secretary of the Interior) commercial, industrial, or business activity established or organized for the purpose of profit, provided that Indian ownership constitutea not less than 51 percent of the enterprise.

"Indian tribe" means any Indian tribe, band, group, pueblo or community, including native villages and native groups (including corporations organized by Kenai, Juneau, Sitka, and Kodiak) as defined in the Alaska Native Claims Settlement Act, that is recognized by the Federal Government as eligible for services from BIA in accordance with 25 U.S.C. 1542(c).

"Interested party" means a prime contractor or an actual or prospective offeror whose direct economic interest would be affected by the award of a subcontract or by the failure to award a subcontract.

(b) The Contractor shall use its best efforts to give Indian organizations and Indian-owned economic enterprises (25 U.S.C. 1544) the maximum practicable opportunity to participate in the subcontracts it awards to the fullest extent consistent with efficient performance of its contract.

(1) The Contracting Officer and the Contractor, acting in good faith, may rely on the representation of an Indian organization or Indian-owned economic enterprise as to its eligibility, unless an interested party challenges its status or the Contracting Officer has independent reason to question that status. In the event of a challenge to the representation of a subcontractor, the Contracting Officer will refer the matter to the U.S. Department of the Interior, Bureau of Indian Affairs (BIA), Attn: Chief, Division of Contracting and Grants Administration, 1849 C Street, NW., MS 2626-MIB, Washington, DC 20240-4000.

The BIA will determine the eligibility and notify the Contracting Officer. No incentive payment will be made within 50 working days of subcontract award or while a challenge is pending. If a subcontractor is determined to be an ineligible participant, no incentive payment will be made under the Indian Incentive Program.

(2) The Contractor may request an adjustment under the Indian Incentive Program to the following:

(i) The estimated cost of a cost-type contract.

(ii) The target cost of a cost-plus-incentive-fee prime contract.

(iii) The target cost and ceiling price of a fixed-price incentive prime contract.

(iv) The price of a firm-fixed-price prime contract.

(3) The amount of the adjustment to the prime contract is 5 percent of the estimated cost, target cost, or firm-fixed-price included in the subcontract initially awarded to the Indian organization or Indian-owned economic enterprise.

(4) The Contractor has the burden of proving the amount claimed and must assert its request for an adjustment prior to completion of contract performance.

(c) The Contracting Officer, subject to the terms and conditions of the contract and the availability of funds, will authorize an incentive payment of 5 percent of the amount paid to the subcontractor. The Contracting Officer will seek funding in accordance with agency procedures.

(End of clause)

52.227-1 AUTHORIZATION AND CONSENT (JUL 1995)

(a) The Government authorizes and consents to all use and manufacture, in performing this contract or any subcontract at any tier, of any invention described in and covered by a United States patent (1) embodied in the structure or composition of any article the delivery of which is accepted by the Government under this contract or (2) used in machinery, tools, or methods whose use necessarily results from compliance by the Contractor or a subcontractor with (i) specifications or written provisions forming a part of this contract or (ii) specific written instructions given by the Contracting Officer directing the manner of performance. The entire liability to the Government for infringement of a patent of the United States shall be determined solely by the provisions of the indemnity clause, if any, included in this contract or any subcontract hereunder (including any lower-tier subcontract), and the Government assumes liability for all other infringement to the extent of the authorization and consent hereinabove granted.

(b) The Contractor agrees to include, and require inclusion of, this clause, suitably modified to identify the parties, in all subcontracts at any tier for supplies or services (including construction, architect-engineer services, and materials, supplies, models, samples, and design or testing services expected to exceed the simplified acquisition threshold (however, omission of this clause from any subcontract, including those at or below the simplified acquisition threshold, does not affect this authorization and consent.)

(End of clause)

52.227-4 PATENT INDEMNITY--CONSTRUCTION CONTRACTS (APR 1984)

Except as otherwise provided, the Contractor agrees to indemnify the Government and its officers, agents, and employees against liability, including costs and expenses, for infringement upon any United States patent (except a patent issued upon an application that is now or may hereafter be withheld from issue pursuant to a Secrecy Order under 35 U.S.C. 181) arising out of performing this contract or out of the use or disposal by or for the account of the Government of supplies furnished or work performed under this contract.

(End of clause)

52.228-2 ADDITIONAL BOND SECURITY (OCT 1997)

The Contractor shall promptly furnish additional security required to protect the Government and persons supplying labor or materials under this contract if--

(a) Any surety upon any bond, or issuing financial institution for other security, furnished with this contract becomes unacceptable to the Government.

(b) Any surety fails to furnish reports on its financial condition as required by the Government;

(c) The contract price is increased so that the penal sum of any bond becomes inadequate in the opinion of the Contracting Officer; or

(d) An irrevocable letter of credit (ILC) used as security will expire before the end of the period of required security. If the Contractor does not furnish an acceptable extension or replacement ILC, or other acceptable substitute, at least 30 days before an ILC's scheduled expiration, the Contracting officer has the right to immediately draw on the ILC.

(End of clause)

52.228-5 INSURANCE--WORK ON A GOVERNMENT INSTALLATION (JAN 1997)

(a) The Contractor shall, at its own expense, provide and maintain during the entire performance of this contract, at least the kinds and minimum amounts of insurance required in the Schedule or elsewhere in the contract.

(b) Before commencing work under this contract, the Contractor shall notify the Contracting Officer in writing that the required insurance has been obtained. The policies evidencing required insurance shall contain an endorsement to the effect that any cancellation or any material change adversely affecting the Government's interest shall not be effective (1) for such period as the laws of the State in which this contract is to be performed prescribe, or (2) until 30 days after the insurer or the Contractor gives written notice to the Contracting Officer, whichever period is longer.

(c) The Contractor shall insert the substance of this clause, including this paragraph (c), in subcontracts under this contract that require work on a Government installation and shall require subcontractors to provide and maintain the insurance required in the Schedule or elsewhere in the contract. The Contractor shall maintain a copy of all subcontractors' proofs of required insurance, and shall make copies available to the Contracting Officer upon request.

(End of clause)

52.228-11 PLEDGES OF ASSETS (FEB 1992)

(a) Offerors shall obtain from each person acting as an individual surety on a bid guarantee, a performance bond, or a payment bond--

(1) Pledge of assets; and

(2) Standard Form 28, Affidavit of Individual Surety.

(b) Pledges of assets from each person acting as an individual surety shall be in the form of--

(1) Evidence of an escrow account containing cash, certificates of deposit, commercial or Government securities, or other assets described in FAR 28.203-2 (except see 28.203-2(b)(2) with respect to Government securities held in book entry form) and/or;

(2) A recorded lien on real estate. The offeror will be required to provide--

(i) Evidence of title in the form of a certificate of title prepared by a title insurance company approved by the United States Department of Justice. This title evidence must show fee simple title vested in the surety along with any concurrent owners; whether any real estate taxes are due and payable; and any recorded encumbrances against the property, including the lien filed in favor of the Government as required by FAR 28.203-3(d);

(ii) Evidence of the amount due under any encumbrance shown in the evidence of title;

(iii) A copy of the current real estate tax assessment of the property or a current appraisal dated no earlier than 6 months prior to the date of the bond, prepared by a professional appraiser who certifies that the appraisal has been conducted in accordance with the generally accepted appraisal standards as reflected in the Uniform Standards of Professional Appraisal Practice, as promulgated by the Appraisal Foundation.

(End of clause)

52.228-12 PROSPECTIVE SUBCONTRACTOR REQUESTS FOR BONDS. (OCT 1995)

In accordance with Section 806(a)(3) of Pub. L. 102-190, as amended by Sections 2091 and 8105 of Pub. L. 103-355, upon the request of a prospective subcontractor or supplier offering to furnish labor or material for the performance of this contract for which a payment bond has been furnished to the Government pursuant to the Miller Act, the Contractor shall promptly provide a copy of such payment bond to the requester.

(End of clause)

52.228-13 ALTERNATIVE PAYMENT PROTECTIONS (JULY 2000)

(a) The Contractor shall submit one of the following payment protections:

(i) irrevocable letter of credit, (ii) payment bond.

(b) The amount of the payment protection shall be 100 percent of the contract price.

(c) The submission of the payment protection is required within 10 days of contract award.

(d) The payment protection shall provide protection for the full contract performance period plus a one-year period.

(e) Except for escrow agreements and payment bonds, which provide their own protection procedures, the Contracting Officer is authorized to access funds under the payment protection when it has been alleged in writing by a supplier of labor or material that a nonpayment has occurred, and to withhold such funds pending resolution by administrative or judicial proceedings or mutual agreement of the parties.

(f) When a tripartite escrow agreement is used, the Contractor shall utilize only suppliers of labor and material that

signed the escrow agreement.

(End of clause)

52.228-14 IRREVOCABLE LETTER OF CREDIT (DEC 1999)

(a) “Irrevocable letter of credit” (ILC), as used in this clause, means a written commitment by a federally insured financial institution to pay all or part of a stated amount of money, until the expiration date of the letter, upon presentation by the Government (the beneficiary) of a written demand therefor. Neither the financial institution nor the offeror/Contractor can revoke or condition the letter of credit.

(b) If the offeror intends to use an ILC in lieu of a bid bond, or to secure other types of bonds such as performance and payment bonds, the letter of credit and letter of confirmation formats in paragraphs (e) and (f) of this clause shall be used.

(c) The letter of credit shall be irrevocable, shall require presentation of no document other than a written demand and the ILC (including confirming letter, if any), shall be issued/confirmed by an acceptable federally insured financial institution as provided in paragraph (d) of this clause, and--

(1) If used as a bid guarantee, the ILC shall expire no earlier than 60 days after the close of the bid acceptance period;

(2) If used as an alternative to corporate or individual sureties as security for a performance or payment bond, the offeror/Contractor may submit an ILC with an initial expiration date estimated to cover the entire period for which financial security is required or may submit an ILC with an initial expiration date that is a minimum period of one year from the date of issuance. The ILC shall provide that, unless the issuer provides the beneficiary written notice of non-renewal at least 60 days in advance of the current expiration date, the ILC is automatically extended without amendment for one year from the expiration date, or any future expiration date, until the period of required coverage is completed and the Contracting Officer provides the financial institution with a written statement waiving the right to payment. The period of required coverage shall be:

(i) For contracts subject to the Miller Act, the later of--

(A) One year following the expected date of final payment;

(B) For performance bonds only, until completion of any warranty period; or

(C) For payment bonds only, until resolution of all claims filed against the payment bond during the one-year period following final payment.

(ii) For contracts not subject to the Miller Act, the later of--

(A) 90 days following final payment; or

(B) For performance bonds only, until completion of any warranty period.

(d) Only federally insured financial institutions rated investment grade or higher shall issue or confirm the ILC. The offeror/Contractor shall provide the Contracting Officer a credit rating that indicates the financial institution has the required rating(s) as of the date of issuance of the ILC. Unless the financial institution issuing the ILC had letter of credit business of less than $25 million in the past year, ILCs over $5 million must be confirmed by another acceptable financial institution that had letter of credit business of less than $25 million in the past year.

(e) The following format shall be used by the issuing financial institution to create an ILC:

_____

[Issuing Financial Institution's Letterhead or Name and Address]

Issue Date _____

IRREVOCABLE LETTER OF CREDIT NO. _____

Account party's name _____

Account party's address _____

For Solicitation No. _____(for reference only)

TO: [U.S. Government agency]

[U.S. Government agency's address]

1. We hereby establish this irrevocable and transferable Letter of Credit in your favor for one or more drawings up to United States $_____. This Letter of Credit is payable at [issuing financial institution's and, if any, confirming financial institution's] office at [issuing financial institution's address and, if any, confirming financial institution's address] and expires with our close of business on _____, or any automatically extended expiration date.

2. We hereby undertake to honor your or the transferee's sight draft(s) drawn on the issuing or, if any, the confirming financial institution, for all or any part of this credit if presented with this Letter of Credit and confirmation, if any, at the office specified in paragraph 1 of this Letter of Credit on or before the expiration date or any automatically extended expiration date.

3. [This paragraph is omitted if used as a bid guarantee, and subsequent paragraphs are renumbered.] It is a condition of this Letter of Credit that it is deemed to be automatically extended without amendment for one year from the expiration date hereof, or any future expiration date, unless at least 60 days prior to any expiration date, we notify you or the transferee by registered mail, or other receipted means of delivery, that we elect not to consider this Letter of Credit renewed for any such additional period. At the time we notify you, we also agree to notify the account party (and confirming financial institution, if any) by the same means of delivery.

4. This Letter of Credit is transferable. Transfers and assignments of proceeds are to be effected without charge to either the beneficiary or the transferee/assignee of proceeds. Such transfer or assignment shall be only at the written direction of the Government (the beneficiary) in a form satisfactory to the issuing financial institution and the confirming financial institution, if any.

5. This Letter of Credit is subject to the Uniform Customs and Practice (UCP) for Documentary Credits, 1993 Revision, International Chamber of Commerce Publication No. 500, and to the extent not inconsistent therewith, to the laws of _____ [state of confirming financial institution, if any, otherwise state of issuing financial institution].

6. If this credit expires during an interruption of business of this financial institution as described in Article 17 of the UCP, the financial institution specifically agrees to effect payment if this credit is drawn against within 30 days after the resumption of our business.

Sincerely,

_____

[Issuing financial institution]

(f) The following format shall be used by the financial institution to confirm an ILC:

_____
[Confirming Financial Institution's Letterhead or Name and Address]

(Date) _____

Our Letter of Credit Advice Number _____

Beneficiary: _____ [U.S. Government agency]

Issuing Financial Institution: _____

Issuing Financial Institution's LC No.: _____

Gentlemen:

1. We hereby confirm the above indicated Letter of Credit, the original of which is attached, issued by _____ [name of issuing financial institution] for drawings of up to United States dollars _____/U.S. $_____ and expiring with our close of business on _____ [the expiration date], or any automatically extended expiration date.

2. Draft(s) drawn under the Letter of Credit and this Confirmation are payable at our office located at _____.

3. We hereby undertake to honor sight draft(s) drawn under and presented with the Letter of Credit and this Confirmation at our offices as specified herein.

4. [This paragraph is omitted if used as a bid guarantee, and subsequent paragraphs are renumbered.] It is a condition of this confirmation that it be deemed automatically extended without amendment for one year from the expiration date hereof, or any automatically extended expiration date, unless:

(a) At least 60 days prior to any such expiration date, we shall notify the Contracting Officer, or the transferee and the issuing financial institution, by registered mail or other receipted means of delivery, that we elect not to consider this confirmation extended for any such additional period; or

(b) The issuing financial institution shall have exercised its right to notify you or the transferee, the account party, and ourselves, of its election not to extend the expiration date of the Letter of Credit.

5. This confirmation is subject to the Uniform Customs and Practice (UCP) for Documentary Credits, 1993 Revision, International Chamber of Commerce Publication No. 500, and to the extent not inconsistent therewith, to the laws of _____ [state of confirming financial institution].

6. If this confirmation expires during an interruption of business of this financial institution as described in Article 17 of the UCP, we specifically agree to effect payment if this credit is drawn against within 30 days after the resumption of our business.

Sincerely,

_____

[Confirming financial institution]

(g) The following format shall be used by the Contracting Officer for a sight draft to draw on the Letter of Credit:

SIGHT DRAFT

_____

[City, State]

(Date) _____

[Name and address of financial institution]

Pay to the order of _____ [Beneficiary Agency] _____ the sum of United States $_____.
This draft is drawn under Irrevocable Letter of Credit No. _____.

_____

[Beneficiary Agency]

By: _____

(End of clause)

52.228-15 PERFORMANCE AND PAYMENT BONDS--CONSTRUCTION (JUL 2000)-

(a) Definitions. As used in this clause--

Original contract price means the award price of the contract; or, for requirements contracts, the price payable for the estimated total quantity; or, for indefinite-quantity contracts, the price payable for the specified minimum quantity. Original contract price does not include the price of any options, except those options exercised at the time of contract award.

(b) Amount of required bonds. Unless the resulting contract price is $100,000 or less, the successful offeror shall furnish performance and payment bonds to the Contracting Officer as follows:

(1) Performance bonds (Standard Form 25). The penal amount of performance bonds at the time of contract award shall be 100 percent of the original contract price.

(2) Payment Bonds (Standard Form 25-A). The penal amount of payment bonds at the time of contract award shall be 100 percent of the original contract price.

(3) Additional bond protection. (i) The Government may require additional performance and payment bond protection if the contract price is increased. The increase in protection generally will equal 100 percent of the increase in contract price.

(ii) The Government may secure the additional protection by directing the Contractor to increase the penal amount of the existing bond or to obtain an additional bond.

(c) Furnishing executed bonds. The Contractor shall furnish all executed bonds, including any necessary reinsurance agreements, to the Contracting Officer, within the time period specified in the Bid Guarantee provision of the solicitation, or otherwise specified by the Contracting Officer, but in any event, before starting work.

(d) Surety or other security for bonds. The bonds shall be in the form of firm commitment, supported by corporate sureties whose names appear on the list contained in Treasury Department Circular 570, individual sureties, or by other acceptable security such as postal money order, certified check, cashier's check, irrevocable letter of credit, or, in accordance with Treasury Department regulations, certain bonds or notes of the United States. Treasury Circular 570 is published in the Federal Register or may be obtained from the U.S. Department of Treasury, Financial Management Service, Surety Bond Branch, 401 14th Street, NW, 2nd Floor, West Wing, Washington, DC 20227.

(e) Notice of subcontractor waiver of protection (40 U.S.C. 270b(c). Any waiver of the right to sue on the payment bond is void unless it is in writing, signed by the person whose right is waived, and executed after such person has first furnished labor or material for use in the performance of the contract.

(End of clause)

52.229-3 FEDERAL, STATE, AND LOCAL TAXES (APR 2003)

(a) As used in this clause--

"Contract date" means the date set for bid opening or, if this is a negotiated contract or a modification, the effective date of this contract or modification.

"All applicable Federal, State, and local taxes and duties" means all taxes and duties, in effect on the contract date, that the taxing authority is imposing and collecting on the transactions or property covered by this contract.

"After-imposed Federal tax" means any new or increased Federal excise tax or duty, or tax that was exempted or excluded on the contract date but whose exemption was later revoked or reduced during the contract period, on the transactions or property covered by this contract that the Contractor is required to pay or bear as the result of legislative, judicial, or administrative action taking effect after the contract date. It does not include social security tax or other employment taxes.

"After-relieved Federal tax" means any amount of Federal excise tax or duty, except social security or other employment taxes, that would otherwise have been payable on the transactions or property covered by this contract, but which the Contractor is not required to pay or bear, or for which the Contractor obtains a refund or drawback, as the result of legislative, judicial, or administrative action taking effect after the contract date.

Local taxes includes taxes imposed by a possession or territory of the United States, Puerto Rico, or the Northern Mariana Islands, if the contract is performed wholly or partly in any of those areas.

(b) The contract price includes all applicable Federal, State, and local taxes and duties.

(c) The contract price shall be increased by the amount of any after-imposed Federal tax, provided the Contractor warrants in writing that no amount for such newly imposed Federal excise tax or duty or rate increase was included in the contract price, as a contingency reserve or otherwise.

(d) The contract price shall be decreased by the amount of any after-relieved Federal tax.

(e) The contract price shall be decreased by the amount of any Federal excise tax or duty, except social security or other employment taxes, that the Contractor is required to pay or bear, or does not obtain a refund of, through the Contractor's fault, negligence, or failure to follow instructions of the Contracting Officer.

(f) No adjustment shall be made in the contract price under this clause unless the amount of the adjustment exceeds $250.

(g) The Contractor shall promptly notify the Contracting Officer of all matters relating to any Federal excise tax or duty that reasonably may be expected to result in either an increase or decrease in the contract price and shall take appropriate action as the Contracting Officer directs.

(h) The Government shall, without liability, furnish evidence appropriate to establish exemption from any Federal, State, or local tax when the Contractor requests such evidence and a reasonable basis exists to sustain the exemption.

(End of clause)

52.232-5 PAYMENTS UNDER FIXED-PRICE CONSTRUCTION CONTRACTS (SEP 2002)

(a) Payment of price. The Government shall pay the Contractor the contract price as provided in this contract.

(b) Progress payments. The Government shall make progress payments monthly as the work proceeds, or at more frequent intervals as determined by the Contracting Officer, on estimates of work accomplished which meets the standards of quality established under the contract, as approved by the Contracting Officer.

(1) The Contractor's request for progress payments shall include the following substantiation:

(i) An itemization of the amounts requested, related to the various elements of work required by the contract covered by the payment requested.

(ii) A listing of the amount included for work performed by each subcontractor under the contract.

(iii) A listing of the total amount of each subcontract under the contract.

(iv) A listing of the amounts previously paid to each such subcontractor under the contract.

(v) Additional supporting data in a form and detail required by the Contracting Officer.

(2) In the preparation of estimates, the Contracting Officer may authorize material delivered on the site and preparatory work done to be taken into consideration. Material delivered to the Contractor at locations other than the site also may be taken into consideration if--

(i) Consideration is specifically authorized by this contract; and

(ii) The Contractor furnishes satisfactory evidence that it has acquired title to such material and that the material will be used to perform this contract.

(c) Contractor certification. Along with each request for progress payments, the Contractor shall furnish the following certification, or payment shall not be made: (However, if the Contractor elects to delete paragraph (c)(4) from the certification, the certification is still acceptable.)

I hereby certify, to the best of my knowledge and belief, that--

(1) The amounts requested are only for performance in accordance with the specifications, terms, and conditions of the contract;

(2) All payments due to subcontractors and suppliers from previous payments received under the contract have been made, and timely payments will be made from the proceeds of the payment covered by this certification, in

accordance with subcontract agreements and the requirements of chapter 39 of Title 31, United States Code;

(3) This request for progress payments does not include any amounts which the prime contractor intends to withhold or retain from a subcontractor or supplier in accordance with the terms and conditions of the subcontract; and

(4) This certification is not to be construed as final acceptance of a subcontractor's performance.

_____

(Name)

_____

(Title)

_____

(Date)

(d) Refund of unearned amounts. If the Contractor, after making a certified request for progress payments, discovers that a portion or all of such request constitutes a payment for performance by the Contractor that fails to conform to the specifications, terms, and conditions of this contract (hereinafter referred to as the "unearned amount"), the Contractor shall--

(1) Notify the Contracting Officer of such performance deficiency; and

(2) Be obligated to pay the Government an amount (computed by the Contracting Officer in the manner provided in paragraph (j) of this clause) equal to interest on the unearned amount from the 8th day after the date of receipt of the unearned amount until--

(i) The date the Contractor notifies the Contracting Officer that the performance deficiency has been corrected; or

(ii) The date the Contractor reduces the amount of any subsequent certified request for progress payments by an amount equal to the unearned amount.

(e) Retainage. If the Contracting Officer finds that satisfactory progress was achieved during any period for which a progress payment is to be made, the Contracting Officer shall authorize payment to be made in full. However, if satisfactory progress has not been made, the Contracting Officer may retain a maximum of 10 percent of the amount of the payment until satisfactory progress is achieved. When the work is substantially complete, the Contracting Officer may retain from previously withheld funds and future progress payments that amount the Contracting Officer considers adequate for protection of the Government and shall release to the Contractor all the remaining withheld funds. Also, on completion and acceptance of each separate building, public work, or other division of the contract, for which the price is stated separately in the contract, payment shall be made for the completed work without retention of a percentage.

(f) Title, liability, and reservation of rights. All material and work covered by progress payments made shall, at the time of payment, become the sole property of the Government, but this shall not be construed as--

(1) Relieving the Contractor from the sole responsibility for all material and work upon which payments have been made or the restoration of any damaged work; or

(2) Waiving the right of the Government to require the fulfillment of all of the terms of the contract.

(g) Reimbursement for bond premiums. In making these progress payments, the Government shall, upon request,

reimburse the Contractor for the amount of premiums paid for performance and payment bonds (including coinsurance and reinsurance agreements, when applicable) after the Contractor has furnished evidence of full payment to the surety. The retainage provisions in paragraph (e) of this clause shall not apply to that portion of progress payments attributable to bond premiums.

(h) Final payment. The Government shall pay the amount due the Contractor under this contract after--

(1) Completion and acceptance of all work;

(2) Presentation of a properly executed voucher; and

(3) Presentation of release of all claims against
the Government arising by virtue of this contract, other than claims, in stated amounts, that the Contractor has specifically excepted from the operation of the release. A release may also be required of the assignee if the Contractor's claim to amounts payable under this contract has been assigned under the Assignment of Claims Act of 1940 (31 U.S.C. 3727 and 41 U.S.C. 15).

(i) Limitation because of undefinitized work. Notwithstanding any provision of this contract, progress payments shall not exceed 80 percent on work accomplished on undefinitized contract actions. A "contract action" is any action resulting in a contract, as defined in FAR Subpart 2.1, including contract modifications for additional supplies or services, but not including contract modifications that are within the scope and under the terms of the contract, such as contract modifications issued pursuant to the Changes clause, or funding and other administrative changes.

(j) Interest computation on unearned amounts. In accordance with 31 U.S.C. 3903(c)(1), the amount payable under subparagraph (d)(2) of this clause shall be--

(1) Computed at the rate of average bond equivalent rates of 91-day Treasury bills auctioned at the most recent auction of such bills prior to the date the Contractor receives the unearned amount; and

(2) Deducted from the next available payment to the Contractor.

(End of clause)

52.232-17 INTEREST (JUNE 1996)

(a) Except as otherwise provided in this contract under a Price Reduction for Defective Cost or Pricing Data clause or a Cost Accounting Standards clause, all amounts that become payable by the Contractor to the Government under this contract (net of any applicable tax credit under the Internal Revenue Code (26 U.S.C. 1481)) shall bear simple interest from the date due until paid unless paid within 30 days of becoming due. The interest rate shall be the interest rate established by the Secretary of the Treasury as provided in Section 12 of the Contract Disputes Act of 1978 (Public Law 95-563), which is applicable to the period in which the amount becomes due, as provided in paragraph (b) of this clause, and then at the rate applicable for each six-month period as fixed by the Secretary until the amount is paid. reproduce, prepare derivative works, distribute copies to the public, and (b) Amounts shall be due at the earliest of the following dates:

(1) The date fixed under this contract.

(2) The date of the first written demand for payment consistent with this contract, including any demand resulting from a default termination.

(3) The date the Government transmits to the Contractor a proposed supplemental agreement to confirm completed

negotiations establishing the amount of debt.

(4) If this contract provides for revision of prices, the date of written notice to the Contractor stating the amount of refund payable in connection with a pricing proposal or a negotiated pricing agreement not confirmed by contract modification.

(c) The interest charge made under this clause may be reduced under the procedures prescribed in 32.614-2 of the Federal Acquisition Regulation in effect on the date of this contract.

(End of clause)

52.232-23 ASSIGNMENT OF CLAIMS (JAN 1986)

(a) The Contractor, under the Assignment of Claims Act, as amended, 31 U.S.C. 3727, 41 U.S.C. 15 (hereafter referred to as "the Act"), may assign its rights to be paid amounts due or to become due as a result of the performance of this contract to a bank, trust company, or other financing institution, including any Federal lending agency. The assignee under such an assignment may thereafter further assign or reassign its right under the original assignment to any type of financing institution described in the preceding sentence.

(b) Any assignment or reassignment authorized under the Act and this clause shall cover all unpaid amounts payable under this contract, and shall not be made to more than one party, except that an assignment or reassignment may be made to one party as agent or trustee for two or more parties participating in the financing of this contract.

(c) The Contractor shall not furnish or disclose to any assignee under this contract any classified document (including this contract) or information related to work under this contract until the Contracting Officer authorizes such action in writing.

(End of clause)

52.232-27 PROMPT PAYMENT FOR CONSTRUCTION CONTRACTS (OCT 2003)

Notwithstanding any other payment terms in this contract, the Government will make invoice payments under the terms and conditions specified in this clause. The Government considers payment as being made on the day a check is dated or the date of an electronic funds transfer. Definitions of pertinent terms are set forth in sections 2.101, 32.001, and 32.902 of the Federal Acquisition Regulation. All days referred to in this clause are calendar days, unless otherwise specified. (However, see paragraph (a)(3) concerning payments due on Saturdays, Sundays, and legal holidays.)

(a) Invoice payments--(1) Types of invoice payments. For purposes of this clause, there are several types of invoice payments that may occur under this contract, as follows:

(i) Progress payments, if provided for elsewhere in this contract, based on Contracting Officer approval of the estimated amount and value of work or services performed, including payments for reaching milestones in any project.

(A) The due date for making such payments is 14 days after the designated billing office receives a proper payment request. If the designated billing office fails to annotate the payment request with the actual date of receipt at the time of receipt, the payment due date is the 14th day after the date of the Contractor's payment request, provided the designated billing office receives a proper payment request and there is no disagreement over quantity, quality, or Contractor compliance with contract requirements.

(B) The due date for payment of any amounts retained by the Contracting Officer in accordance with the clause at 52.232-5, Payments Under Fixed-Price Construction Contracts, is as specified in the contract or, if not specified, 30 days after approval by the Contracting Officer for release to the Contractor.

(ii) Final payments based on completion and acceptance of all work and presentation of release of all claims against the Government arising by virtue of the contract, and payments for partial deliveries that have been accepted by the Government (e.g., each separate building, public work, or other division of the contract for which the price is stated separately in the contract).

(A) The due date for making such payments is the later of the following two events:

(1) The 30th day after the designated billing office receives a proper invoice from the Contractor.

(2) The 30th day after Government acceptance of the work or services completed by the Contractor. For a final invoice when the payment amount is subject to contract settlement actions (e.g., release of claims), acceptance is deemed to occur on the effective date of the contract settlement.

(B) If the designated billing office fails to annotate the invoice with the date of actual receipt at the time of receipt, the invoice payment due date is the 30th day after the date of the Contractor's invoice, provided the designated billing office receives a proper invoice and there is no disagreement over quantity, quality, or Contractor compliance with contract requirements.

(2) Contractor's invoice. The Contractor shall prepare and submit invoices to the designated billing office specified in the contract. A proper invoice must include the items listed in paragraphs (a)(2)(i) through (a)(2)(xi) of this clause. If the invoice does not comply with these requirements, the designated billing office must return it within 7 days after receipt, with the reasons why it is not a proper invoice. When computing any interest penalty owed the Contractor, the Government will take into account if the Government notifies the Contractor of an improper invoice in an untimely manner.

(i) Name and address of the Contractor.

(ii) Invoice date and invoice number. (The Contractor should date invoices as close as possible to the date of mailing or transmission.)

(iii) Contract number or other authorization for work or services performed (including order number and contract line item number).

(iv) Description of work or services performed.

(v) Delivery and payment terms (e.g., discount for prompt payment terms).

(vi) Name and address of Contractor official to whom payment is to be sent (must be the same as that in the contract or in a proper notice of assignment).

(vii) Name (where practicable), title, phone number, and mailing address of person to notify in the event of a defective invoice.

(viii) For payments described in paragraph (a)(1)(i) of this clause, substantiation of the amounts requested and certification in accordance with the requirements of the clause at 52.232-5, Payments Under Fixed-Price Construction Contracts.

(ix) Taxpayer Identification Number (TIN). The Contractor shall include its TIN on the invoice only if required elsewhere in this contract.

(x) Electronic funds transfer (EFT) banking information.

(A) The Contractor shall include EFT banking information on the invoice only if required elsewhere in this contract.

(B) If EFT banking information is not required to be on the invoice, in order for the invoice to be a proper invoice, the Contractor shall have submitted correct EFT banking information in accordance with the applicable solicitation provision (e.g., 52.232-38, Submission of Electronic Funds Transfer Information with Offer), contract clause (e.g., 52.232-33, Payment by Electronic Funds Transfer--Central Contractor Registration, or 52.232-34, Payment by Electronic Funds Transfer--Other Than Central Contractor Registration), or applicable agency procedures.

(C) EFT banking information is not required if the Government waived the requirement to pay by EFT.

(xi) Any other information or documentation required by the contract.

(3) Interest penalty. The designated payment office will pay an interest penalty automatically, without request from the Contractor, if payment is not made by the due date and the conditions listed in paragraphs (a)(3)(i) through (a)(3)(iii) of this clause are met, if applicable. However, when the due date falls on a Saturday, Sunday, or legal holiday, the designated payment office may make payment on the following working day without incurring a late payment interest penalty.

(i) The designated billing office received a proper invoice.

(ii) The Government processed a receiving report or other Government documentation authorizing payment and there was no disagreement over quantity, quality, Contractor compliance with any contract term or condition, or requested progress payment amount.

(iii) In the case of a final invoice for any balance of funds due the Contractor for work or services performed, the amount was not subject to further contract settlement actions between the Government and the Contractor.

(4) Computing penalty amount. The Government will compute the interest penalty in accordance with the Office of Management and Budget prompt payment regulations at 5 CFR part 1315.

(i) For the sole purpose of computing an interest penalty that might be due the Contractor for payments described in paragraph (a)(1)(ii) of this clause, Government acceptance or approval is deemed to occur constructively on the 7th day after the Contractor has completed the work or services in accordance with the terms and conditions of the contract. If actual acceptance or approval occurs within the constructive acceptance or approval period, the Government will base the determination of an interest penalty on the actual date of acceptance or approval. Constructive acceptance or constructive approval requirements do not apply if there is a disagreement over quantity, quality, or Contractor compliance with a contract provision. These requirements also do not compel Government officials to accept work or services, approve Contractor estimates, perform contract administration functions, or make payment prior to fulfilling their responsibilities.

(ii) The prompt payment regulations at 5 CFR 1315.10(c) do not require the Government to pay interest penalties if payment delays are due to disagreement between the Government and the Contractor over the payment amount or other issues involving contract compliance, or on amounts temporarily withheld or retained in accordance with the terms of the contract. The Government and the Contractor shall resolve claims involving disputes, and any interest that may be payable in accordance with the clause at FAR 52.233-1, Disputes.

(5) Discounts for prompt payment. The designated payment office will pay an interest penalty automatically, without request from the Contractor, if the Government takes a discount for prompt payment improperly. The Government will calculate the interest penalty in accordance with the prompt payment regulations at 5 CFR part 1315.

(6) Additional interest penalty. (i) The designated payment office will pay a penalty amount, calculated in accordance with the prompt payment regulations at 5 CFR part 1315 in addition to the interest penalty amount only if--

(A) The Government owes an interest penalty of $1 or more;

(B) The designated payment office does not pay the interest penalty within 10 days after the date the invoice amount is paid; and

(C) The Contractor makes a written demand to the designated payment office for additional penalty payment, in accordance with paragraph (a)(6)(ii) of this clause, postmarked not later than 40 days after the date the invoice amount is paid.

(ii)(A) The Contractor shall support written demands for additional penalty payments with the following data. The Government will not request any additional data. The Contractor shall--

(1) Specifically assert that late payment interest is due under a specific invoice, and request payment of all overdue late payment interest penalty and such additional penalty as may be required;

(2) Attach a copy of the invoice on which the unpaid late payment interest was due; and

(3) State that payment of the principal has been received, including the date of receipt.

(B) If there is no postmark or the postmark is illegible--

(1) The designated payment office that receives the demand will annotate it with the date of receipt provided the demand is received on or before the 40th day after payment was made; or

(2) If the designated payment office fails to make the required annotation, the Government will determine the demand's validity based on the date the Contractor has placed on the demand, provided such date is no later than the 40th day after payment was made.

(b) Contract financing payments. If this contract provides for contract financing, the Government will make contract financing payments in accordance with the applicable contract financing clause.

(c) Subcontract clause requirements. The Contractor shall include in each subcontract for property or services (including a material supplier) for the purpose of performing this contract the following:

(1) Prompt payment for subcontractors. A payment clause that obligates the Contractor to pay the subcontractor for satisfactory performance under its subcontract not later than 7 days from receipt of payment out of such amounts as are paid to the Contractor under this contract.

(2) Interest for subcontractors. An interest penalty clause that obligates the Contractor to pay to the subcontractor an interest penalty for each payment not made in accordance with the payment clause--

(i) For the period beginning on the day after the required payment date and ending on the date on which payment of the amount due is made; and

(ii) Computed at the rate of interest established by the Secretary of the Treasury, and published in the Federal Register, for interest payments under section 12 of the Contract Disputes Act of 1978 (41 U.S.C. 611) in effect at the time the Contractor accrues the obligation to pay an interest penalty.

(3) Subcontractor clause flowdown. A clause requiring each subcontractor to use:

(i) Include a payment clause and an interest penalty clause conforming to the standards set forth in paragraphs (c)(1) and (c)(2) of this clause in each of its subcontracts; and

(ii) Require each of its subcontractors to include such clauses in their subcontracts with each lower-tier subcontractor or supplier.

(d) Subcontract clause interpretation. The clauses required by paragraph (c) of this clause shall not be construed to impair the right of the Contractor or a subcontractor at any tier to negotiate, and to include in their subcontract, provisions that--

(1) Retainage permitted. Permit the Contractor or a subcontractor to retain (without cause) a specified percentage of each progress payment otherwise due to a subcontractor for satisfactory performance under the subcontract without incurring any obligation to pay a late payment interest penalty, in accordance with terms and conditions agreed to by the parties to the subcontract, giving such recognition as the parties deem appropriate to the ability of a subcontractor to furnish a performance bond and a payment bond;

(2) Withholding permitted. Permit the Contractor or subcontractor to make a determination that part or all of the subcontractor's request for payment may be withheld in accordance with the subcontract agreement; and

(3) Withholding requirements. Permit such withholding without incurring any obligation to pay a late payment penalty if--

(i) A notice conforming to the standards of paragraph (g) of this clause previously has been furnished to the subcontractor; and

(ii) The Contractor furnishes to the Contracting Officer a copy of any notice issued by a Contractor pursuant to paragraph (d)(3)(i) of this clause.

(e) Subcontractor withholding procedures. If a Contractor, after making a request for payment to the Government but before making a payment to a subcontractor for the subcontractor's performance covered by the payment request, discovers that all or a portion of the payment otherwise due such subcontractor is subject to withholding from the subcontractor in accordance with the subcontract agreement, then the Contractor shall--

(1) Subcontractor notice. Furnish to the subcontractor a notice conforming to the standards of paragraph (g) of this clause as soon as practicable upon ascertaining the cause giving rise to a withholding, but prior to the due date for subcontractor payment;

(2) Contracting Officer notice. Furnish to the Contracting Officer, as soon as practicable, a copy of the notice furnished to the subcontractor pursuant to paragraph (e)(1) of this clause;

(3) Subcontractor progress payment reduction. Reduce the subcontractor's progress payment by an amount not to exceed the amount specified in the notice of withholding furnished under paragraph (e)(1) of this clause;

(4) Subsequent subcontractor payment. Pay the subcontractor as soon as practicable after the correction of the identified subcontract performance deficiency, and--

(i) Make such payment within--

(A) Seven days after correction of the identified subcontract performance deficiency (unless the funds therefor must be recovered from the Government because of a reduction under paragraph
(e)(5)(i)) of this clause; or

(B) Seven days after the Contractor recovers such funds from the Government; or

(ii) Incur an obligation to pay a late payment interest penalty computed at the rate of interest established by the Secretary of the Treasury, and published in the Federal Register, for interest payments under section 12 of the Contracts Disputes Act of 1978 (41 U.S.C. 611) in effect at the time the Contractor accrues the obligation to pay an interest penalty;

(5) Notice to Contracting Officer. Notify the Contracting Officer upon--

(i) Reduction of the amount of any subsequent certified application for payment; or

(ii) Payment to the subcontractor of any withheld amounts of a progress payment, specifying--

(A) The amounts withheld under paragraph (e)(1) of this clause; and

(B) The dates that such withholding began and ended; and

(6) Interest to Government. Be obligated to pay to the Government an amount equal to interest on the withheld payments (computed in the manner provided in 31 U.S.C. 3903(c)(1)), from the 8th day after receipt of the withheld amounts from the Government until--

(i) The day the identified subcontractor performance deficiency is corrected; or

(ii) The date that any subsequent payment is reduced under paragraph (e)(5)(i) of this clause.

(f) Third-party deficiency reports--(1) Withholding from subcontractor. If a Contractor, after making payment to a first-tier subcontractor, receives from a supplier or subcontractor of the first-tier subcontractor (hereafter referred to as a “second-tier subcontractor”) a written notice in accordance with section 2 of the Act of August 24, 1935 (40 U.S.C. 270b, Miller Act), asserting a deficiency in such first-tier subcontractor's performance under the contract for which the Contractor may be ultimately liable, and the Contractor determines that all or a portion of future payments otherwise due such first-tier subcontractor is subject to withholding in accordance with the subcontract agreement, the Contractor may, without incurring an obligation to pay an interest penalty under paragraph (e)(6) of this clause--

(i) Furnish to the first-tier subcontractor a notice conforming to the standards of paragraph (g) of this clause as soon as practicable upon making such determination; and

(ii) Withhold from the first-tier subcontractor's next available progress payment or payments an amount not to exceed the amount specified in the notice of withholding furnished under paragraph (f)(1)(i) of this clause.

(2) Subsequent payment or interest charge. As soon as practicable, but not later than 7 days after receipt of satisfactory written notification that the identified subcontract performance deficiency has been corrected, the Contractor shall--

(i) Pay the amount withheld under paragraph (f)(1)(ii) of this clause to such first-tier subcontractor; or

(ii) Incur an obligation to pay a late payment interest penalty to such first-tier subcontractor computed at the rate of interest established by the Secretary of the Treasury, and published in the Federal Register, for interest payments under section 12 of the Contracts DisputesAct of 1978 (41 U.S.C. 611) in effect at the time the Contractor accrues the obligation to pay an interest penalty.

(g) Written notice of subcontractor withholding. The Contractor shall issue a written notice of any withholding to a subcontractor (with a copy furnished to the Contracting Officer), specifying--

(1) The amount to be withheld;

(2) The specific causes for the withholding under the terms of the subcontract; and

(3) The remedial actions to be taken by the subcontractor in order to receive payment of the amounts withheld.

(h) Subcontractor payment entitlement. The Contractor may not request payment from the Government of any amount withheld or retained in accordance with paragraph (d) of this clause until such time as the Contractor has determined and certified to the Contracting Officer that the subcontractor is entitled to the payment of such amount.

(i) Prime-subcontractor disputes. A dispute between the Contractor and subcontractor relating to the amount or entitlement of a subcontractor to a payment or a late payment interest penalty under a clause included in the subcontract pursuant to paragraph (c) of this clause does not constitute a dispute to which the Government is a party. The Government may not be interpleaded in any judicial or administrative proceeding involving such a dispute.

(j) Preservation of prime-subcontractor rights. Except as provided in paragraph (i) of this clause, this clause shall not limit or impair any contractual, administrative, or judicial remedies otherwise available to the Contractor or a subcontractor in the event of a dispute involving late payment or nonpayment by the Contractor or deficient subcontract performance or nonperformance by a subcontractor.

(k) Non-recourse for prime contractor interest penalty. The Contractor's obligation to pay an interest penalty to a subcontractor pursuant to the clauses included in a subcontract under paragraph (c) of this clause shall not be construed to be an obligation of the Government for such interest penalty. A cost-reimbursement claim may not include any amount for reimbursement of such interest penalty.

(l) Overpayments. If the Contractor becomes aware of a duplicate contract financing or invoice payment or that the Government has otherwise overpaid on a contract financing or invoice payment, the Contractor shall immediately notify the Contracting Officer and request instructions for disposition of the overpayment.

(End of clause)

52.233-1 DISPUTES. (JUL 2002)

(a) This contract is subject to the Contract Disputes Act of 1978, as amended (41 U.S.C. 601-613).

(b) Except as provided in the Act, all disputes arising under or relating to this contract shall be resolved under this clause.

(c) Claim, as used in this clause, means a written demand or written assertion by one of the contracting parties seeking, as a matter of right, the payment of money in a sum certain, the adjustment or interpretation of contract terms, or other relief arising under or relating to this contract. However, a written demand or written assertion by the Contractor seeking the payment of money exceeding $100,000 is not a claim under the Act until certified. A voucher, invoice, or other routine request for payment that is not in dispute when submitted is not a claim under the Act. The submission may be converted to a claim under the Act, by complying with the submission and certification requirements of this clause, if it is disputed either as to liability or amount or is not acted upon in a reasonable time.

(d)(1) A claim by the Contractor shall be made in writing and, unless otherwise stated in this contract, submitted within 6 years after accrual of the claim to the Contracting Officer for a written decision. A claim by the Government against the Contractor shall be subject to a written decision by the Contracting Officer.

(2)(i) The contractors shall provide the certification specified in subparagraph (d)(2)(iii) of this clause when submitting any claim -

(A) Exceeding $100,000; or

(B) Regardless of the amount claimed, when using -

(1) Arbitration conducted pursuant to 5 U.S.C. 575-580; or

(2) Any other alternative means of dispute resolution (ADR) technique that the agency elects to handle in accordance with the Administrative Dispute Resolution Act (ADRA).

(ii) The certification requirement does not apply to issues in controversy that have not been submitted as all or part of a claim.

(iii) The certification shall state as follows: "I certify that the claim is made in good faith; that the supporting data are accurate and complete to the best of my knowledge and belief; that the amount requested accurately reflects the contract adjustment for which the Contractor believes the Government is liable; and that I am duly authorized to certify the claim on behalf of the Contractor.

(3) The certification may be executed by any person duly authorized to bind the Contractor with respect to the claim.

(e) For Contractor claims of $100,000 or less, the Contracting Officer must, if requested in writing by the Contractor, render a decision within 60 days of the request. For Contractor-certified claims over $100,000, the Contracting Officer must, within 60 days, decide the claim or notify the Contractor of the date by which the decision will be made.

(f) The Contracting Officer's decision shall be final unless the Contractor appeals or files a suit as provided in the Act.

(g) If the claim by the Contractor is submitted to the Contracting Officer or a claim by the Government is presented to the Contractor, the parties, by mutual consent, may agree to use alternative disput resolution (ADR). If the Contractor refuses an offer for ADR, the Contractor shall inform the Contracting Officer, in writing, of the Contractor's specific reasons for rejecting the request.

(h) The Government shall pay interest on the amount found due and unpaid from (1) the date the Contracting Officer receives the claim (certified, if required); or (2) the date that payment otherwise would be due, if that date is later, until the date of payment. With regard to claims having defective certifications, as defined in (FAR) 48 CFR 33.201, interest shall be paid from the date that the Contracting Officer initially receives the claim. Simple interest on claims shall be paid at the rate, fixed by the Secretary of the Treasury as provided in the Act, which is applicable to the period during which the Contracting Officer receives the claim and then at the rate applicable for each 6-month period as fixed by the Treasury Secretary during the pendency of the claim.

(i) The Contractor shall proceed diligently with performance of this contract, pending final resolution of any request for relief, claim, appeal, or action arising under the contract, and comply with any decision of the Contracting Officer.

(End of clause)

52.233-3 PROTEST AFTER AWARD (AUG. 1996)

(a) Upon receipt of a notice of protest (as defined in FAR 33.101) or a determination that a protest is likely (see FAR 33.102(d)), the Contracting Officer may, by written order to the Contractor, direct the Contractor to stop performance of the work called for by this contract. The order shall be specifically identified as a stop-work order

issued under this clause. Upon receipt of the order, the Contractor shall immediately comply with its terms and take all reasonable steps to minimize the incurrence of costs allocable to the work covered by the order during the period of work stoppage. Upon receipt of the final decision in the protest, the Contracting Officer shall either--

(1) Cancel the stop-work order; or

(2) Terminate the work covered by the order as provided in the Default, or the Termination for Convenience of the Government, clause of this contract.

(b) If a stop-work order issued under this clause is canceled either before or after a final decision in the protest, the Contractor shall resume work. The Contracting Officer shall make an equitable adjustment in the delivery schedule or contract price, or both, and the contract shall be modified, in writing, accordingly, if--

(1) The stop-work order results in an increase in the time required for, or in the Contractor's cost properly allocable to, the performance of any part of this contract; and

(2) The Contractor asserts its right to an adjustment within 30 days after the end of the period of work stoppage; provided, that if the Contracting Officer decides the facts justify the action, the Contracting Officer may receive and act upon a proposal at any time before final payment under this contract.

(c) If a stop-work order is not canceled and the work covered by the order is terminated for the convenience of the Government, the Contracting Officer shall allow reasonable costs resulting from the stop-work order in arriving at the termination settlement.

(d) If a stop-work order is not canceled and the work covered by the order is terminated for default, the Contracting Officer shall allow, by equitable adjustment or otherwise, reasonable costs resulting from the stop-work order.

(e) The Government's rights to terminate this contract at any time are not affected by action taken under this clause.

(f) If, as the result of the Contractor's intentional or negligent misstatement, misrepresentation, or miscertification, a protest related to this contract is sustained, and the Government pays costs, as provided in FAR 33.102(b)(2) or 33.104(h)(1), the Government may require the Contractor to reimburse the Government the amount of such costs. In addition to any other remedy available, and pursuant to the requirements of Subpart 32.6, the Government may collect this debt by offsetting the amount against any payment due the Contractor under any contract between the Contractor and the Government.

(End of clause)

52.236-1 PERFORMANCE OF WORK BY THE CONTRACTOR (APR 1984)

The Contractor shall perform on the site, and with its own organization, work equivalent to at least twenty (20%) percent of the total amount of work to be performed under the contract. This percentage may be reduced by a supplemental agreement to this contract if, during performing the work, the Contractor requests a reduction and the Contracting Officer determines that the reduction would be to the advantage of the Government.

(End of clause)

52.236-2 DIFFERING SITE CONDITIONS (APR 1984)

As prescribed in 36.502, insert the following clause in solicitations and contracts when a fixed-price construction

contract or a fixed-price dismantling, demolition, or removal of improvements contract is contemplated and the contract amount is expected to exceed the small purchase limitation. The Contracting Officer may insert the clause in solicitations and contracts when a fixed-price construction or a fixed-price contract for dismantling, demolition, or removal of improvements is contemplated and the contract amount is expected to be within the small purchase limitation.

(a) The Contractor shall promptly, and before the conditions are disturbed, give a written notice to the Contracting Officer of

(1) subsurface or latent physical conditions at the site which differ materially from those indicated in this contract, or

(2) unknown physical conditions at the site, of an unusual nature, which differ materially from those ordinarily encountered and generally recognized as inhering in work of the character provided for in the contract.

(b) The Contracting Officer shall investigate the site conditions promptly after receiving the notice. If the conditions do materially so differ and cause an increase or decrease in the Contractor's cost of, or the time required for, performing any part of the work under this contract, whether or not changed as a result of the conditions, an equitable adjustment shall be made under this clause and the contract modified in writing accordingly.

(c) No request by the Contractor for an equitable adjustment to the contract under this clause shall be allowed, unless the Contractor has given the written notice required; provided, that the time prescribed in (a) above for giving written notice may be extended by the Contracting Officer.

(d) No request by the Contractor for an equitable adjustment to the contract for differing site conditions shall be allowed if made after final payment under this contract.

(End of clause)

52.236-3 SITE INVESTIGATION AND CONDITIONS AFFECTING THE WORK (APR 1984)

(a) The Contractor acknowledges that it has taken steps reasonably necessary to ascertain the nature and location of the work, and that it has investigated and satisfied itself as to the general and local conditions which can affect the work or its cost, including but not limited to

(1) conditions bearing upon transportation, disposal, handling, and storage of materials;

(2) the availability of labor, water, electric power, and roads;

(3) uncertainties of weather, river stages, tides, or similar physical conditions at the site;

(4) the conformation and conditions of the ground; and (5) the character of equipment and facilities needed preliminary to and during work performance. The Contractor also acknowledges that it has satisfied itself as to the character, quality, and quantity of surface and subsurface materials or obstacles to be encountered insofar as this information is reasonably ascertainable from an inspection of the site, including all exploratory work done by the Government, as well as from the drawings and specifications made a part of this contract. Any failure of the Contractor to take the actions described and acknowledged in this paragraph will not relieve the Contractor from responsibility for estimating properly the difficulty and cost of successfully performing the work, or for proceeding to successfully perform the work without additional expense to the Government.

(b) The Government assumes no responsibility for any conclusions or interpretations made by the Contractor based on the information made available by the Government. Nor does the Government assume responsibility for any

understanding reached or representation made concerning conditions which can affect the work by any of its officers or agents before the execution of this contract, unless that understanding or representation is expressly stated in this contract.

(End of clause)

52.236-5 MATERIAL AND WORKMANSHIP (APR 1984)

(a) All equipment, material, and articles incorporated into the work covered by this contract shall be new and of the most suitable grade for the purpose intended, unless otherwise specifically provided in this contract. References in the specifications to equipment, material, articles, or patented processes by trade name, make, or catalog number, shall be regarded as establishing a standard of quality and shall not be construed as limiting competition. The Contractor may, at its option, use any equipment, material, article, or process that, in the judgment of the Contracting Officer, is equal to that named in the specifications, unless otherwise specifically provided in this contract.

(b) The Contractor shall obtain the Contracting Officer's approval of the machinery and mechanical and other equipment to be incorporated into the work. When requesting approval, the Contractor shall furnish to the Contracting Officer the name of the manufacturer, the model number, and other information concerning the performance, capacity, nature, and rating of the machinery and mechanical and other equipment. When required by this contract or by the Contracting Officer, the Contractor shall also obtain the Contracting Officer's approval of the material or articles which the Contractor contemplates incorporating into the work. When requesting approval, the Contractor shall provide full information concerning the material or articles. When directed to do so, the Contractor shall submit samples for approval at the Contractor's expense, with all shipping charges prepaid. Machinery, equipment, material, and articles that do not have the required approval shall be installed or used at the risk of subsequent rejection.

(c) All work under this contract shall be performed in a skillful and workmanlike manner. The Contracting Officer may require, in writing, that the Contractor remove from the work any employee the Contracting Officer deems incompetent, careless, or otherwise objectionable.

(End of clause)

52.236-6 SUPERINTENDENCE BY THE CONTRACTOR (APR 1984)

At all times during performance of this contract and until the work is completed and accepted, the Contractor shall directly superintend the work or assign and have on the worksite a competent superintendent who is satisfactory to the Contracting Officer and has authority to act for the Contractor.

(End of clause)

52.236-7 PERMITS AND RESPONSIBILITIES (NOV 1991)

The Contractor shall, without additional expense to the Government, be responsible for obtaining any necessary licenses and permits, and for complying with any Federal, State, and municipal laws, codes, and regulations applicable to the performance of the work. The Contractor shall also be responsible for all damages to persons or property that occur as a result of the Contractor's fault or negligence. The Contractor shall also be responsible for all materials delivered and work performed until completion and acceptance of the entire work, except for any

completed unit of work which may have been accepted under the contract.

(End of clause)

52.236-8 OTHER CONTRACTS (APR 1984)

The Government may undertake or award other contracts for additional work at or near the site of the work under this contract. The Contractor shall fully cooperate with the other contractors and with Government employees and shall carefully adapt scheduling and performing the work under this contract to accommodate the additional work, heeding any direction that may be provided by the Contracting Officer. The Contractor shall not commit or permit any act that will interfere with the performance of work by any other contractor or by Government employees.

(End of clause)

52.236-9 PROTECTION OF EXISTING VEGETATION, STRUCTURES, EQUIPMENT, UTILITIES, AND IMPROVEMENTS (APR 1984)

(a) The Contractor shall preserve and protect all structures, equipment, and vegetation (such as trees, shrubs, and grass) on or adjacent to the work site, which are not to be removed and which do not unreasonably interfere with the work required under this contract. The Contractor shall only remove trees when specifically authorized to do so, and shall avoid damaging vegetation that will remain in place. If any limbs or branches of trees are broken during contract performance, or by the careless operation of equipment, or by workmen, the Contractor shall trim those limbs or branches with a clean cut and paint the cut with a tree-pruning compound as directed by the Contracting Officer.

(b) The Contractor shall protect from damage all existing improvements and utilities

(1) at or near the work site, and

(2) on adjacent property of a third party, the locations of which are made known to or should be known by the Contractor. The Contractor shall repair any damage to those facilities, including those that are the property of a third party, resulting from failure to comply with the requirements of this contract or failure to exercise reasonable care in performing the work. If the Contractor fails or refuses to repair the damage promptly, the Contracting Officer may have the necessary work performed and charge the cost to the Contractor.

(End of clause)

52.236-10 OPERATIONS AND STORAGE AREAS (APR 1984)

(a) The Contractor shall confine all operations (including storage of materials) on Government premises to areas authorized or approved by the Contracting Officer. The Contractor shall hold and save the Government, its officers and agents, free and harmless from liability of any nature occasioned by the Contractor's performance.

(b) Temporary buildings (e.g., storage sheds, shops, offices) and utilities may be erected by the Contractor only with the approval of the Contracting Officer and shall be built with labor and materials furnished by the Contractor without expense to the Government. The temporary buildings and utilities shall remain the property of the Contractor and shall be removed by the Contractor at its expense upon completion of the work. With the written consent of the Contracting Officer, the buildings and utilities may be abandoned and need not be removed.

(c) The Contractor shall, under regulations prescribed by the Contracting Officer, use only established roadways, or use temporary roadways constructed by the Contractor when and as authorized by the Contracting Officer. When materials are transported in prosecuting the work, vehicles shall not be loaded beyond the loading capacity recommended by the manufacturer of the vehicle or prescribed by any Federal, State, or local law or regulation. When it is necessary to cross curbs or sidewalks, the Contractor shall protect them from damage. The Contractor shall repair or pay for the repair of any damaged curbs, sidewalks, or roads.

(End of clause)

52.236-11 USE AND POSSESSION PRIOR TO COMPLETION (APR 1984)

(a) The Government shall have the right to take possession of or use any completed or partially completed part of the work. Before taking possession of or using any work, the Contracting Officer shall furnish the Contractor a list of items of work remaining to be performed or corrected on those portions of the work that the Government intends to take possession of or use. However, failure of the Contracting Officer to list any item of work shall not relieve the Contractor of responsibility for complying with the terms of the contract. The Government's possession or use shall not be deemed an acceptance of any work under the contract.

(b) While the Government has such possession or use, the Contractor shall be relieved of the responsibility for the loss of or damage to the work resulting from the Government's possession or use, notwithstanding the terms of the clause in this contract entitled "Permits and Responsibilities." If prior possession or use by the Government delays the progress of the work or causes additional expense to the Contractor, an equitable adjustment shall be made in the contract price or the time of completion, and the contract shall be modified in writing accordingly.

(End of clause)

52.236-12 CLEANING UP (APR 1984)

The Contractor shall at all times keep the work area, including storage areas, free from accumulations of waste materials. Before completing the work, the Contractor shall remove from the work and premises any rubbish, tools, scaffolding, equipment, and materials that are not the property of the Government. Upon completing the work, the Contractor shall leave the work area in a clean, neat, and orderly condition satisfactory to the Contracting Officer.

(End of clause)

52.236-13 ACCIDENT PREVENTION (NOV 1991)

(a) The Contractor shall provide and maintain work environments and procedures which will

(1) safeguard the public and Government personnel, property, materials, supplies, and equipment exposed to Contractor operations and activities;

(2) avoid interruptions of Government operations and delays in project completion dates; and

(3) control costs in the performance of this contract.

(b) For these purposes on contracts for construction or dismantling, demolition, or removal of improvements, the

Contractor shall-

(1) Provide appropriate safety barricades, signs, and signal lights;

(2) Comply with the standards issued by the Secretary of Labor at 29 CFR Part 1926 and 29 CFR Part 1910; and

(3) Ensure that any additional measures the Contracting Officer determines to be reasonably necessary for the purposes are taken.

(c) If this contract is for construction or dismantling, demolition or removal of improvements with any Department of Defense agency or component, the Contractor shall comply with all pertinent provisions of the latest version of U.S. Army Corps of Engineers Safety and Health Requirements Manual, EM 385-1-1, in effect on the date of the solicitation.

(d) Whenever the Contracting Officer becomes aware of any noncompliance with these requirements or any condition which poses a serious or imminent danger to the health or safety of the public or Government personnel, the Contracting Officer shall notify the Contractor orally, with written confirmation, and request immediate initiation of corrective action. This notice, when delivered to the Contractor or the Contractor's representative at the work site, shall be deemed sufficient notice of the noncompliance and that corrective action is required. After receiving the notice, the Contractor shall immediately take corrective action. If the Contractor fails or refuses to promptly take corrective action, the Contracting Officer may issue an order stopping all or part of the work until satisfactory corrective action has been taken. The Contractor shall not be entitled to any equitable adjustment of the contract price or extension of the performance schedule on any stop work order issued under this clause.

(viii) The Contractor shall insert this clause, including this paragraph (e), with appropriate changes in the designation of the parties, in subcontracts.

(End of clause)

52.236-14 AVAILABILITY AND USE OF UTILITY SERVICES (APR 1984)

(a) The Government shall make all reasonably required amounts of utilities available to the Contractor from existing outlets and supplies, as specified in the contract. Unless otherwise provided in the contract, the amount of each utility service consumed shall be charged to or paid for by the Contractor at prevailing rates charged to the Government or, where the utility is produced by the Government, at reasonable rates determined by the Contracting Officer. The Contractor shall carefully conserve any utilities furnished without charge.

(b) The Contractor, at its expense and in a workmanlike manner satisfactory to the Contracting Officer, shall install and maintain all necessary temporary connections and distribution lines, and all meters required to measure the amount of each utility used for the purpose of determining charges. Before final acceptance of the work by the Government, the Contractor shall remove all the temporary connections, distribution lines, meters, and associated paraphernalia.

(End of clause)

52.236-15 SCHEDULES FOR CONSTRUCTION CONTRACTS (APR 1984)

(a) The Contractor shall, within five days after the work commences on the contract or another period of time determined by the Contracting Officer, prepare and submit to the Contracting Officer for approval three copies of a practicable schedule showing the order in which the Contractor proposes to perform the work, and the dates on

which the Contractor contemplates starting and completing the several salient features of the work (including acquiring materials, plant, and equipment). The schedule shall be in the form of a progress chart of suitable scale to indicate appropriately the percentage of work scheduled for completion by any given date during the period. If the Contractor fails to submit a schedule within the time prescribed, the Contracting Officer may withhold approval of progress payments until the Contractor submits the required schedule.

(b) The Contractor shall enter the actual progress on the chart as directed by the Contracting Officer, and upon doing so shall immediately deliver three copies of the annotated schedule to the Contracting Officer. If, in the opinion of the Contracting Officer, the Contractor falls behind the approved schedule, the Contractor shall take steps necessary to improve its progress, including those that may be required by the Contracting Officer, without additional cost to the Government. In this circumstance, the Contracting Officer may require the Contractor to increase the number of shifts, overtime operations, days of work, and/or the amount of construction plant, and to submit for approval any supplementary schedule or schedules in chart form as the Contracting Officer deems necessary to demonstrate how the approved rate of progress will be regained.

(c) Failure of the Contractor to comply with the requirements of the Contracting Officer under this clause shall be grounds for a determination by the Contracting Officer that the Contractor is not prosecuting the work with sufficient diligence to ensure completion within the time specified in the contract. Upon making this determination, the Contracting Officer may terminate the Contractor's right to proceed with the work, or any separable part of it, in accordance with the default terms of this contract.

(End of clause)

52.236-16 QUANTITY SURVEYS (APR 1984)

(a) Quantity surveys shall be conducted, and the data derived from these surveys shall be used in computing the quantities of work performed and the actual construction completed and in place.

(b) The Government shall conduct the original and final surveys and make the computations based on them. The Contractor shall conduct the surveys for any periods for which progress payments are requested and shall make the computations based on these surveys. All surveys conducted by the Contractor shall be conducted under the direction of a representative of the Contracting Officer, unless the Contracting Officer waives this requirement in a specific instance.

(c) Promptly upon completing a survey, the Contractor shall furnish the originals of all field notes and all other records relating to the survey or to the layout of the work to the Contracting Officer, who shall use them as necessary to determine the amount of progress payments. The Contractor shall retain copies of all such material furnished to the Contracting Officer.

(End of clause)

52.236-17 LAYOUT OF WORK (APR 1984)

The Contractor shall lay out its work from Government established base lines and bench marks indicated on the drawings, and shall be responsible for all measurements in connection with the layout. The Contractor shall furnish, at its own expense, all stakes, templates, platforms, equipment, tools, materials, and labor required to lay out any part of the work. The Contractor shall be responsible for executing the work to the lines and grades that may be established or indicated by the Contracting Officer. The Contractor shall also be responsible for maintaining and preserving all stakes and other marks established by the Contracting Officer until authorized to remove them. If such marks are destroyed by the Contractor or through its negligence before their removal is authorized, the

Contracting Officer may replace them and deduct the expense of the replacement from any amounts due or to become due to the Contractor.

(End of clause)

52.236-17 LAYOUT OF WORK (APR 1984)

The Contractor shall lay out its work from Government established base lines and bench marks indicated on the drawings, and shall be responsible for all measurements in connection with the layout. The Contractor shall furnish, at its own expense, all stakes, templates, platforms, equipment, tools, materials, and labor required to lay out any part of the work. The Contractor shall be responsible for executing the work to the lines and grades that may be established or indicated by the Contracting Officer. The Contractor shall also be responsible for maintaining and preserving all stakes and other marks established by the Contracting Officer until authorized to remove them. If such marks are destroyed by the Contractor or through its negligence before their removal is authorized, the Contracting Officer may replace them and deduct the expense of the replacement from any amounts due or to become due to the Contractor.

(End of clause)

52.236-21 SPECIFICATIONS AND DRAWINGS FOR CONSTRUCTION (FEB 1997)

(a) The Contractor shall keep on the work site a copy of the drawings and specifications and shall at all times give the Contracting Officer access thereto. Anything mentioned in the specifications and not shown on the drawings, or shown on the drawings and not mentioned in the specifications, shall be of like effect as if shown or mentioned in both. In case of difference between drawings and specifications, the specifications shall govern. In case of discrepancy in the figures, in the drawings, or in the specifications, the matter shall be promptly submitted to the Contracting Officer, who shall promptly make a determination in writing. Any adjustment by the Contractor without such a determination shall be at its own risk and expense. The Contracting Officer shall furnish from time to time such detailed drawings and other information as considered necessary, unless otherwise provided.

(b) Wherever in the specifications or upon the drawings the words "directed", "required", "ordered", "designated", "prescribed", or words of like import are used, it shall be understood that the "direction", "requirement", "order", "designation", or "prescription", of the Contracting Officer is intended and similarly the words "approved", "acceptable", "satisfactory", or words of like import shall mean "approved by," or "acceptable to", or "satisfactory to" the Contracting Officer, unless otherwise expressly stated.

(c) Where "as shown," as indicated", "as detailed", or words of similar import are used, it shall be understood that the reference is made to the drawings accompanying this contract unless stated otherwise. The word "provided" as used herein shall be understood to mean "provide complete in place," that is "furnished and installed".

(d) Shop drawings means drawings, submitted to the Government by the Contractor, subcontractor, or any lower tier subcontractor pursuant to a construction contract, showing in detail (1) the proposed fabrication and assembly of structural elements, and (2) the installation (i.e., fit, and attachment details) of materials or equipment. It includes drawings, diagrams, layouts, schematics, descriptive literature, illustrations, schedules, performance and test data, and similar materials furnished by the contractor to explain in detail specific portions of the work required by the contract. The Government may duplicate, use, and disclose in any manner and for any purpose shop drawings delivered under this contract.

(e) If this contract requires shop drawings, the Contractor shall coordinate all such drawings, and review them for accuracy, completeness, and compliance with contract requirements and shall indicate its approval thereon as

evidence of such coordination and review. Shop drawings submitted to the Contracting Officer without evidence of the Contractor's approval may be returned for resubmission. The Contracting Officer will indicate an approval or disapproval of the shop drawings and if not approved as submitted shall indicate the Government's reasons therefor. Any work done before such approval shall be at the Contractor's risk. Approval by the Contracting Officer shall not relieve the Contractor from responsibility for any errors or omissions in such drawings, nor from responsibility for complying with the requirements of this contract, except with respect to variations described and approved in accordance with (f) below.

(f) If shop drawings show variations from the contract requirements, the Contractor shall describe such variations in writing, separate from the drawings, at the time of submission. If the Contracting Officer approves any such variation, the Contracting Officer shall issue an appropriate contract modification, except that, if the variation is minor or does not involve a change in price or in time of performance, a modification need not be issued.

(g) The Contractor shall submit to the Contracting Officer for approval four copies (unless otherwise indicated) of all shop drawings as called for under the various headings of these specifications. Three sets (unless otherwise indicated) of all shop drawings, will be retained by the Contracting Officer and one set will be returned to the Contractor.

(End of clause)

52.236-26 PRECONSTRUCTION CONFERENCE (FEB 1995)

If the Contracting Officer decides to conduct a preconstruction conference, the successful offeror will be notified and will be required to attend. The Contracting Officer's notification will include specific details regarding the date, time, and location of the conference, any need for attendance by subcontractors, and information regarding the items to be discussed.

(End of clause)

52.236-26 PRECONSTRUCTION CONFERENCE (FEB 1995)

If the Contracting Officer decides to conduct a preconstruction conference, the successful offeror will be notified and will be required to attend. The Contracting Officer's notification will include specific details regarding the date, time, and location of the conference, any need for attendance by subcontractors, and information regarding the items to be discussed.

(End of clause)

52.242-13 BANKRUPTCY (JUL 1995)

In the event the Contractor enters into proceedings relating to bankruptcy, whether voluntary or involuntary, the Contractor agrees to furnish, by certified mail or electronic commerce method authorized by the contract, written notification of the bankruptcy to the Contracting Officer responsible for administering the contract. This notification shall be furnished within five days of the initiation of the proceedings relating to bankruptcy filing. This notification shall include the date on which the bankruptcy petition was filed, the identity of the court in which the bankruptcy petition was filed, and a listing of Government contract numbers and contracting offices for all Government contracts against which final payment has not been made. This obligation remains in effect until final payment under this contract.

(End of clause)

52.242-14 SUSPENSION OF WORK (APR 1984)

(a) The Contracting Officer may order the Contractor, in writing, to suspend, delay, or interrupt all or any part of the work of this contract for the period of time that the Contracting Officer determines appropriate for the convenience of the Government.

(b) If the performance of all or any part of the work is, for an unreasonable period of time, suspended, delayed, or interrupted (1) by an act of the Contracting Officer in the administration of this contract, or (2) by the Contracting Officer's failure to act within the time specified in this contract (or within a reasonable time if not specified), an adjustment shall be made for any increase in the cost of performance of this contract (excluding profit) necessarily caused by the unreasonable suspension, delay, or interruption, and the contract modified in writing accordingly. However, no adjustment shall be made under this clause for any suspension, delay, or interruption to the extent that performance would have been so suspended, delayed, or interrupted by any other cause, including the fault or negligence of the Contractor, or for which an equitable adjustment is provided for or excluded under any other term or condition of this contract. (c) A claim under this clause shall not be allowed (1) for any costs incurred more than 20 days before the Contractor shall have notified the Contracting Officer in writing of the act or failure to act involved (but this requirement shall not apply as to a claim resulting from a suspension order), and (2) unless the claim, in an amount stated, is asserted in writing as soon as practicable after the termination of the suspension, delay, or interruption, but not later than the date of final payment under the contract.

(End of clause)

52.243-4 CHANGES (AUG 1987)

(a) The Contracting Officer may, at any time, without notice to the sureties, if any, by written order designated or indicated to be a change order, make changes in the work within the general scope of the contract, including changes--

(1) In the specifications (including drawings and designs);

(2) In the method or manner of performance of the work;

(3) In the Government-furnished facilities, equipment, materials, services, or site; or

(4) Directing acceleration in the performance of the work.

(b) Any other written or oral order (which, as used in this paragraph (b), includes direction, instruction, interpretation, or determination) from the Contracting Officer that causes a change shall be treated as a change order under this clause; provided, that the Contractor gives the Contracting Officer written notice stating

(1) the date, circumstances, and source of the order and

(2) that the Contractor regards the order as a change order.

(c) Except as provided in this clause, no order, statement, or conduct of the Contracting Officer shall be treated as a change under this clause or entitle the Contractor to an equitable adjustment.

(d) If any change under this clause causes an increase or decrease in the Contractor's cost of, or the time required

for, the performance of any part of the work under this contract, whether or not changed by any such order, the Contracting Officer shall make an equitable adjustment and modify the contract in writing. However, except for an adjustment based on defective specifications, no adjustment for any change under paragraph (b) of this clause shall be made for any costs incurred more than 20 days before the Contractor gives written notice as required. In the case of defective specifications for which the Government is responsible, the equitable adjustment shall include any increased cost reasonably incurred by the Contractor in attempting to comply with the defective specifications.

(e) The Contractor must assert its right to an adjustment under this clause within 30 days after

(1) receipt of a written change order under paragraph (a) of this clause or (2) the furnishing of a written notice under paragraph (b) of this clause, by submitting to the Contracting Officer a written statement describing the general nature and amount of the proposal, unless this period is extended by the Government. The statement of proposal for adjustment may be included in the notice under paragraph (b) above.

(f) No proposal by the Contractor for an equitable adjustment shall be allowed if asserted after final payment under this contract.

(End of clause)

52.243-5 CHANGES AND CHANGED CONDITIONS (APR 1984)

(a) The Contracting Officer may, in writing, order changes in the drawings and specifications within the general scope of the contract.

(b) The Contractor shall promptly notify the Contracting Officer, in writing, of subsurface or latent physical conditions differing materially from those indicated in this contract or unknown unusual physical conditions at the site before proceeding with the work.

(c) If changes under paragraph (a) or conditions under paragraph (b) increase or decrease the cost of, or time required for performing the work, the Contracting Officer shall make an equitable adjustment (see paragraph (d)) upon submittal of a "proposal for adjustment" (hereafter referred to as proposal) by the Contractor before final payment under the contract.

(d) The Contracting Officer shall not make an equitable adjustment under paragraph (b) unless--

(1) The Contractor has submitted and the Contracting Officer has received the required written notice; or

(2) The Contracting Officer waives the requirement for the written notice.

(e) Failure to agree to any adjustment shall be a dispute under the Disputes clause.

(End of clause)

52.244-6 SUBCONTRACTS FOR COMMERCIAL ITEMS (UL 2004)

(a) Definitions.

"Commercial item", has the meaning contained in Federal Acquistion Regulation 2.101, Definitions.

"Subcontract", includes a transfer of commercial items between divisions, subsidiaries, or affiliates of the Contractor or subcontractor at any tier.

(b) To the maximum extent practicable, the Contractor shall incorporate, and require its subcontractors at all tiers to incorporate, commercial items or nondevelopmental items as components of items to be supplied under this contract.

(c) (1) The Contractor shall insert the following clauses in subcontracts for commercial items:

(i) 52.219-8, Utilization of Small Business Concerns (MAY 2004) (15 U.S.C. 637(d)(2) and (3)), in all subcontracts that offer further subcontracting opportunities. If the subcontract (except subcontracts to small business concerns) exceeds $500,000 ($1,000,000 for construction of any public facility), the subcontractor must include 52.219-8 in lower tier subcontracts that offer subcontracting opportunities.

(ii) 52.222-26, Equal Opportunity (Apr 2002) (E.O. 11246).

(iii) 52.222-35, Equal Opportunity for Special Disabled Veterans, Veterans of the Vietnam Era and Other Eligible Veterans (DEC 2001) (38 U.S.C. 4212(a)).

(iv) 52.222-36, Affirmative Action for Workers with Disabilities (JUN 1998) (29 U.S.C. 793).

(v) 52.247-64, Preference for Privately Owned U.S.-Flag Commercial Vessels (APR 2003) (46 U.S.C. Appx 1241 and 10 U.S.C. 2631) (flow down required in accordance with paragraph (d) of FAR clause 52.247-64).

(2) While not required, the Contractor may flow down to subcontracts for commercial items a minimal number of additional clauses necessary to satisfy its contractual obligations.

(d) The Contractor shall include the terms of this clause, including this paragraph (d), in subcontracts awarded under this contract.

(End of clause)

52.245-2 GOVERNMENT PROPERTY (FIXED-PRICE CONTRACTS) (MAY 2004)

(a) Government-furnished property.

(1) Overseas contracts. If this contract is to be performed outside of the United States and its outlying areas, the words ``Government'' and ``Government-furnished'' (wherever they appear in this clause) shall be construed as ``United States Government'' and ``United States Government-furnished,'' respectively.

(2) The delivery or performance dates for this contract are based upon the expectation that Government-furnished property suitable for use (except for property furnished "as is") will be delivered to the Contractor at the times stated in the Schedule or, if not so stated, in sufficient time to enable the Contractor to meet the contract's delivery or performance dates.

(3) If Government-furnished property is received by the Contractor in a condition not suitable for the intended use, the Contractor shall, upon receipt of it, notify the Contracting Officer, detailing the facts, and, as directed by the Contracting Officer and at Government expense, either repair, modify, return, or otherwise dispose of the property. After completing the directed action and upon written request of the Contractor, the Contracting Officer shall make an equitable adjustment as provided in paragraph (h) of this clause.

(4) If Government-furnished property is not delivered to the Contractor by the required time, the Contracting Officer shall, upon the Contractor's timely written request, make a determination of the delay, if any, caused the Contractor and shall make an equitable adjustment in accordance with paragraph (h) of this clause.

(b) Changes in Government-furnished property. (1) The Contracting Officer may, by written notice, (i) decrease the Government-furnished property provided or to be provided under this contract, or (ii) substitute other Government-furnished property for the property to be provided by the Government, or to be acquired by the Contractor for the Government, under this contract. The Contractor shall promptly take such action as the Contracting Officer may direct regarding the removal, shipment, or disposal of the property covered by such notice.

(2) Upon the Contractor's written request, the Contracting Officer shall make an equitable adjustment to the contract in accordance with paragraph (h) of this clause, if the Government has agreed in the Schedule to make the property available for performing this contract and there is any--

(i) Decrease or substitution in this property pursuant to subparagraph (b)(1) of this clause; or

(ii) Withdrawal of authority to use this property, if provided under any other contract or lease.

(c) Title in Government property. (1) The Government shall retain title to all Government-furnished property.

(2) All Government-furnished property and all property acquired by the Contractor, title to which vests in the Government under this paragraph (collectively referred to as "Government property"), are subject to the provisions of this clause. However, special tooling accountable to this contract is subject to the provisions of the Special Tooling clause and is not subject to the provisions of this clause. Title to Government property shall not be affected by its incorporation into or attachment to any property not owned by the Government, nor shall Government property become a fixture or lose its identity as personal property by being attached to any real property.

(3) Title to each item of facilities and special test equipment acquired by the Contractor for the Government under this contract shall pass to and vest in the Government when its use in performing this contract commences or when the Government has paid for it, whichever is earlier, whether or not title previously vested in the Government.

(4) If this contract contains a provision directing the Contractor to purchase material for which the Government will reimburse the Contractor as a direct item of cost under this contract--

(i) Title to material purchased from a vendor shall pass to and vest in the Government upon the vendor's delivery of such material; and

(ii) Title to all other material shall pass to and vest in the Government upon--

(A) Issuance of the material for use in contract performance;

(B) Commencement of processing of the material or its use in contract performance; or

(C) Reimbursement of the cost of the material by the Government, whichever occurs first.

(d) Use of Government property. The Government property shall be used only for performing this contract, unless otherwise provided in this contract or approved by the Contracting Officer.

(e) Property administration. (1) The Contractor shall be responsible and accountable for all Government property provided under this contract and shall comply with Federal Acquisition Regulation (FAR) Subpart 45.5, as in effect on the date of this contract.

(2) The Contractor shall establish and maintain a program for the use, maintenance, repair, protection, and preservation of Government property in accordance with sound industrial practice and the applicable provisions of Subpart 45.5 of the FAR.

(3) If damage occurs to Government property, the risk of which has been assumed by the Government under this contract, the Government shall replace the items or the Contractor shall make such repairs as the Government directs. However, if the Contractor cannot effect such repairs within the time required, the Contractor shall dispose of the property as directed by the Contracting Officer. When any property for which the Government is responsible is replaced or repaired, the Contracting Officer shall make an equitable adjustment in accordance with paragraph (h) of this clause.

(4) The Contractor represents that the contract price does not include any amount for repairs or replacement for which the Government is responsible. Repair or replacement of property for which the Contractor is responsible shall be accomplished by the Contractor at its own expense.

(f) Access. The Government and all its designees shall have access at all reasonable times to the premises in which any Government property is located for the purpose of inspecting the Government property.

(g) Risk of loss. Unless otherwise provided in this contract, the Contractor assumes the risk of, and shall be responsible for, any loss or destruction of, or damage to, Government property upon its delivery to the Contractor or upon passage of title to the Government under paragraph (c) of this clause. However, the Contractor is not responsible for reasonable wear and tear to Government property or for Government property properly consumed in performing this contract.

(h) Equitable adjustment. When this clause specifies an equitable adjustment, it shall be made to any affected contract provision in accordance with the procedures of the Changes clause. When appropriate, the Contracting Officer may initiate an equitable adjustment in favor of the Government. The right to an equitable adjustment shall be the Contractor's exclusive remedy. The Government shall not be liable to suit for breach of contract for--

(1) Any delay in delivery of Government-furnished property;

(2) Delivery of Government-furnished property in a condition not suitable for its intended use;

(3) A decrease in or substitution of Government-furnished property; or

(4) Failure to repair or replace Government property for which the Government is responsible.

(i) Government property disposal. Except as provided in paragraphs (i)(1)(i), (i)(2), and (i)(8)(i) of this clause, the Contractor shall not dispose of Government property until authorized to do so by the Plant Clearance Officer.

(1) Scrap (to which the Government has obtained title under paragraph (c) of this clause).--(i) Contractor with an approved scrap procedure.--(A) The Contractor may dispose of scrap resulting from production or testing under this contract without Government approval. However, if the scrap requires demilitarization or is sensitive property, the Contractor shall submit the scrap on an inventory disposal schedule.

(B) For scrap from other than production or testing the Contractor may prepare scrap lists in lieu of inventory disposal schedules (provided such lists are consistent with the approved scrap procedures), except that inventory disposal schedules shall be submitted for scrap aircraft or aircraft parts and scrap that--

(1) Requires demilitarization;

(2) Is a classified item;

(3) Is generated from classified items;

(4) Contains hazardous materials or hazardous wastes;

(5) Contains precious metals; or

(6) Is dangerous to the public health, safety, or welfare.

(ii) Contractor without an approved scrap procedure. The Contractor shall submit an inventory disposal schedule for all scrap.

(2) Pre-disposal requirements. When the Contractor determines that a property item acquired or produced by the Contractor, to which the Government has obtained title under paragraph (c) of this clause, is no longer needed for performance of this contract, the Contractor, in the following order of priority:

(i) May purchase the property at the **acquisition** cost.

(ii) Shall make reasonable efforts to return unused property to the appropriate supplier at fair market value (less, if applicable, a reasonable restocking fee that is consistent with the supplier's customary practices).

(iii) Shall list, on Standard Form 1428, Inventory Disposal Schedule, property that was not purchased under paragraph (i)(2)(i) of this clause, could not be returned to a supplier, or could not be used in the performance of other Government contracts.

(3) Inventory disposal schedules.--(i) The Contractor shall use Standard Form 1428, Inventory Disposal Schedule, to identify--

(A) Government-furnished property that is no longer required for performance of this contract, provided the terms of another Government contract do not require the Government to furnish that property for performance of that contract; and

(B) Property acquired or produced by the Contractor, to which the Government has obtained title under paragraph (c) of this clause, that is no longer required for performance of that contract.

(ii) The Contractor may annotate inventory disposal schedules to identify property the Contractor wishes to purchase from the Government.

(iii) Unless the Plant Clearance Officer has agreed otherwise, or the contract requires electronic submission of inventory disposal schedules, the Contractor shall prepare separate inventory disposal schedules for--

(A) Special test equipment with commercial components;

(B) Special test equipment without commercial components;

(C) Printing equipment;

(D) Computers, components thereof, peripheral equipment, and related equipment;

(E) Precious Metals;

(F) Nonnuclear hazardous materials or hazardous wastes; or

(G) Nuclear materials or nuclear wastes.

(iv) Property with the same description, condition code, and reporting location may be grouped in a single line item. The Contractor shall describe special test equipment in sufficient detail to permit an understanding of the special test equipment's intended use.

(4) Submission requirements. The Contractor shall submit inventory disposal schedules to the Plant Clearance Officer no later than--

(i) Thirty days following the Contractor's determination that a Government property item is no longer required for performance of the contract;

(ii) Sixty days, or such longer period as may be approved by the Plant Clearance Officer, following completion of contract deliveries or performance; or

(iii) One hundred twenty days, or such longer period as may be approved by the Plant Clearance Officer, following contract termination in whole or in part.

(5) Corrections. The Plant Clearance Officer may require the Contractor to correct an inventory disposal schedule or may reject a schedule if the property identified on the schedule is not accountable under this contract or is not in the quantity or condition indicated.

(6) Postsubmission adjustments. The Contractor shall provide the Plant Clearance Officer at least 10 working days advance written notice of its intent to remove a property item from an approved inventory disposal schedule. Unless the Plant Clearance Officer objects to the intended schedule adjustment within the notice period, the Contractor may make the adjustment upon expiration of the notice period.

(7) Storage.--

(i) The Contractor shall store the property identified on an inventory disposal schedule pending receipt of disposal instructions. The Government's failure to provide disposal instructions within 120 days following acceptance of an inventory disposal schedule might entitle the Contractor to an equitable adjustment for costs incurred to store such property on or after the 121st day.

(ii) The Contractor shall obtain the Plant Clearance Officer's approval to remove Government property from the premises at which the property is currently located prior to receipt of final disposition instructions. If approval is granted, any costs incurred by the Contractor to transport or store the property shall not increase the price or fee of any Government contract. The storage facility shall be appropriate for assuring the property's physical safety and suitability for use. Approval does not relieve the Contractor of any liability under this contract for such property.

(8) Disposition instructions.

(i) If the Government does not provide disposition instructions to the Contractor within 45 days following acceptance of a scrap list, the Contractor may dispose of the listed scrap in accordance with the Contractor's approved scrap procedures.

(ii) The Contractor shall prepare for shipment, deliver f.o.b. origin, or dispose of Government property as directed by the Plant Clearance Officer. The Contractor shall remove and destroy any markings identifying the property as Government property prior to disposing of the property.

(iii) The Contracting Officer may require the Contractor to demilitarize the property prior to shipment or disposal. Any equitable adjustment incident to the Contracting Officer's direction to demilitarize Government property shall be made in accordance with paragraph (h) of this clause.

(9) Disposal proceeds. The Contractor shall credit the net proceeds from the disposal of Government property to the price or cost of work covered by this contract or to the Government as the Contracting Officer directs.

(10) Subcontractor inventory disposal schedules. The Contractor shall require a subcontractor that is using property accountable under this contract at a subcontractor-managed site to submit inventory disposal schedules to the Contractor in sufficient time for the Contractor to comply with the requirements of paragraph (i)(4) of this clause.

(j) Abandonment of Government property.

(1) The Government will not abandon sensitive Government property without the Contractor's written consent.

(2) The Government, upon notice to the Contractor, may abandon any nonsensitive Government property in place at which time all obligations of the Government regarding such abandoned property shall cease.

(3) The Government has no obligation to restore or rehabilitate the Contractor's premises under any circumstances; however, if Government-furnished property is withdrawn or is unsuitable for the intended use, or if other Government property is substituted, then the equitable adjustment under paragraph (h) of this clause may properly include restoration or rehabilitation costs.

(k) Communications. All communications under this clause shall be in writing.

(l) Overseas contracts. If this contract is to be performed outside of the United States of America, its territories, or possessions, the words "Government" and "Government-furnished" (wherever they appear in this clause) shall be construed as "United States Government" and "United States Government-furnished," respectively.

(End of clause)

52.246-1 CONTRACTOR INSPECTION REQUIREMENTS (APR 1984)

The Contractor is responsible for performing or having performed all inspections and tests necessary to substantiate that the supplies or services furnished under this contract conform to contract requirements, including any applicable technical requirements for specified manufacturers' parts. This clause takes precedence over any Government inspection and testing required in the contract's specifications, except for specialized inspections or tests specified to be performed solely by the Government.

(End of clause)

52.246-12 INSPECTION OF CONSTRUCTION (AUG 1996)

(a) Definition. "Work" includes, but is not limited to, materials, workmanship, and manufacture and fabrication of components.

(b) The Contractor shall maintain an adequate inspection system and perform such inspections as will ensure that the work performed under the contract conforms to contract requirements. The Contractor shall maintain complete inspection records and make them available to the Government. All work shall be conducted under the general direction of the Contracting Officer and is subject to Government inspection and test at all places and at all reasonable times before acceptance to ensure strict compliance with the terms of the contract.

(c) Government inspections and tests are for the sole benefit of the Government and do not--

(1) Relieve the Contractor of responsibility for providing adequate quality control measures;

(2) Relieve the Contractor of responsibility for damage to or loss of the material before acceptance;

(3) Constitute or imply acceptance; or

(4) Affect the continuing rights of the Government after acceptance of the completed work under paragraph (i) of this section.

(d) The presence or absence of a Government inspector does not relieve the Contractor from any contract requirement, nor is the inspector authorized to change any term or condition of the specification without the Contracting Officer's written authorization.

(e) The Contractor shall promptly furnish, at no increase in contract price, all facilities, labor, and material reasonably needed for performing such safe and convenient inspections and tests as may be required by the Contracting Officer. The Government may charge to the Contractor any additional cost of inspection or test when work is not ready at the time specified by the Contractor for inspection or test, or when prior rejection makes reinspection or retest necessary. The Government shall perform all inspections and tests in a manner that will not unnecessarily delay the work. Special, full size, and performance tests shall be performed as described in the contract.

(f) The Contractor shall, without charge, replace or correct work found by the Government not to conform to contract requirements, unless in the public interest the Government consents to accept the work with an appropriate adjustment in contract price. The Contractor shall promptly segregate and remove rejected material from the premises.

(g) If the Contractor does not promptly replace or correct rejected work, the Government may (1) by contract or otherwise, replace or correct the work and charge the cost to the Contractor or (2) terminate for default the Contractor's right to proceed.

(h) If, before acceptance of the entire work, the Government decides to examine already completed work by removing it or tearing it out, the Contractor, on request, shall promptly furnish all necessary facilities, labor, and material. If the work is found to be defective or nonconforming in any material respect due to the fault of the Contractor or its subcontractors, the Contractor shall defray the expenses of the examination and of satisfactory reconstruction. However, if the work is found to meet contract requirements, the Contracting Officer shall make an equitable adjustment for the additional services involved in the examination and reconstruction, including, if completion of the work was thereby delayed, an extension of time.

(i) Unless otherwise specified in the contract, the Government shall accept, as promptly as practicable after completion and inspection, all work required by the contract or that portion of the work the Contracting Officer determines can be accepted separately. Acceptance shall be final and conclusive except for latent defects, fraud, gross mistakes amounting to fraud, or the Government's rights under any warranty or guarantee.

(End of clause)

52.246-21 WARRANTY OF CONSTRUCTION (MAR 1994)

(a) In addition to any other warranties in this contract, the Contractor warrants, except as provided in paragraph (i) of this clause, that work performed under this contract conforms to the contract requirements and is free of any defect in equipment, material, or design furnished, or workmanship performed by the Contractor or any subcontractor or supplier at any tier.

(b) This warranty shall continue for a period of 1 year from the date of final acceptance of the work. If the Government takes possession of any part of the work before final acceptance, this warranty shall continue for a period of 1 year from the date the Government takes possession.

(c) The Contractor shall remedy at the Contractor's expense any failure to conform, or any defect. In addition, the Contractor shall remedy at the Contractor's expense any damage to Government-owned or controlled real or personal property, when that damage is the result of--

(1) The Contractor's failure to conform to contract requirements; or

(2) Any defect of equipment, material, workmanship, or design furnished.

(d) The Contractor shall restore any work damaged in fulfilling the terms and conditions of this clause. The Contractor's warranty with respect to work repaired or replaced will run for 1 year from the date of repair or replacement.

(e) The Contracting Officer shall notify the Contractor, in writing, within a reasonable time after the discovery of any failure, defect, or damage.

(f) If the Contractor fails to remedy any failure, defect, or damage within a reasonable time after receipt of notice, the Government shall have the right to replace, repair, or otherwise remedy the failure, defect, or damage at the Contractor's expense.
(g) With respect to all warranties, express or implied, from subcontractors, manufacturers, or suppliers for work performed and materials furnished under this contract, the Contractor shall--

(1) Obtain all warranties that would be given in normal commercial practice;

(2) Require all warranties to be executed, in writing, for the benefit of the Government, if directed by the Contracting Officer; and

(3) Enforce all warranties for the benefit of the Government, if directed by the Contracting Officer.

(h) In the event the Contractor's warranty under paragraph (b) of this clause has expired, the Government may bring suit at its expense to enforce a subcontractor's, manufacturer's, or supplier's warranty.

(i) Unless a defect is caused by the negligence of the Contractor or subcontractor or supplier at any tier, the Contractor shall not be liable for the repair of any defects of material or design furnished by the Government nor for the repair of any damage that results from any defect in Government-furnished material or design.

(j) This warranty shall not limit the Government's rights under the Inspection and Acceptance clause of this contract with respect to latent defects, gross mistakes, or fraud.

(End of clause)

52.248-3 VALUE ENGINEERING--CONSTRUCTION (FEB 2000)

(a) General. The Contractor is encouraged to develop, prepare, and submit value engineering change proposals (VECP's) voluntarily. The Contractor shall share in any instant contract savings realized from accepted VECP's, in accordance with paragraph (f) below.

(b) Definitions. "Collateral costs," as used in this clause, means agency costs of operation, maintenance, logistic support, or Government-furnished property.

"Collateral savings," as used in this clause, means those measurable net reductions resulting from a VECP in the agency's overall projected collateral costs, exclusive of acquisition savings, whether or not the acquisition cost changes.

"Contractor's development and implementation costs," as used in this clause, means those costs the Contractor incurs on a VECP specifically in developing, testing, preparing, and submitting the VECP, as well as those costs the Contractor incurs to make the contractual changes required by Government acceptance of a VECP.

"Government costs," as used in this clause, means those agency costs that result directly from developing and implementing the VECP, such as any net increases in the cost of testing, operations, maintenance, and logistic support. The term does not include the normal administrative costs of processing the VECP.

"Instant contract savings," as used in this clause, means the estimated reduction in Contractor cost of performance resulting from acceptance of the VECP, minus allowable Contractor's development and implementation costs, including subcontractors' development and implementation costs (see paragraph (h) below).

"Value engineering change proposal (VECP)" means a proposal that--

(1) Requires a change to this, the instant contract, to implement; and

(2) Results in reducing the contract price or estimated cost without impairing essential functions or characteristics; provided, that it does not involve a change--

(i) In deliverable end item quantities only; or

(ii) To the contract type only.

(c) VECP preparation. As a minimum, the Contractor shall include in each VECP the information described in subparagraphs (1) through (7) below. If the proposed change is affected by contractually required configuration management or similar procedures, the instructions in those procedures relating to format, identification, and priority assignment shall govern VECP preparation. The VECP shall include the following:

(1) A description of the difference between the existing contract requirement and that proposed, the comparative advantages and disadvantages of each, a justification when an item's function or characteristics are being altered, and the effect of the change on the end item's performance.

(2) A list and analysis of the contract requirements that must be changed if the VECP is accepted, including any suggested specification revisions.

(3) A separate, detailed cost estimate for

(i) the affected portions of the existing contract requirement and

(ii) the VECP. The cost reduction associated with the VECP shall take into account the Contractor's allowable development and implementation costs, including any amount attributable to subcontracts under paragraph (h) below.

(4) A description and estimate of costs the Government may incur in implementing the VECP, such as test and evaluation and operating and support costs.

(5) A prediction of any effects the proposed change would have on collateral costs to the agency.

(6) A statement of the time by which a contract modification accepting the VECP must be issued in order to achieve the maximum cost reduction, noting any effect on the contract completion time or delivery schedule.

(7) Identification of any previous submissions of the VECP, including the dates submitted, the agencies and contract numbers involved, and previous Government actions, if known.

(d) Submission. The Contractor shall submit VECP's to the Resident Engineer at the worksite, with a copy to the Contracting Officer.

(e) Government action.

(1) The Contracting Officer will notify the Contractor of the status of the VECP within 45 calendar days after the contracting office receives it. If additional time is required, the Contracting Officer will notify the Contractor within the 45-day period and provide the reason for the delay and the expected date of the decision. The Government will process VECP's expeditiously; however, it shall not be liable for any delay in acting upon a VECP.

If the VECP is not accepted, the Contracting Officer will notify the Contractor in writing, explaining the reasons for rejection. The Contractor may withdraw any VECP, in whole or in part, at any time before it is accepted by the Government. The Contracting Officer may require that the Contractor provide written notification before undertaking significant expenditures for VECP effort.

Any VECP may be accepted, in whole or in part, by the Contracting Officer's award of a modification to this contract citing this clause. The Contracting Officer may accept the VECP, even though an agreement on price reduction has not been reached, by issuing the Contractor a notice to proceed with the change. Until a notice to proceed is issued or a contract modification applies a VECP to this contract, the Contractor shall perform in accordance with the existing contract. The decision to accept or reject all or part of any VECP is a unilateral decision made solely at the discretion of the Contracting Officer.

(f) Sharing.

(1) Rates. The Government's share of savings is determined by subtracting Government costs from instant contract savings and multiplying the result by

(i) 45 percent for fixed-price contracts or

(ii) 75 percent for cost-reimbursement contracts.

(2) Payment. Payment of any share due the Contractor for use of a VECP on this contract shall be authorized by a modification to this contract to--

(i) Accept the VECP;

(ii) Reduce the contract price or estimated cost by the amount of instant contract savings; and

(iii) Provide the Contractor's share of savings by adding the amount calculated to the contract price or fee.

(g) Collateral savings. If a VECP is accepted, the Contracting Officer will increase the instant contract amount by 20 percent of any projected collateral savings determined to be realized in a typical year of use after subtracting any Government costs not previously offset. However, the Contractor's share of collateral savings will not exceed the contract's firm-fixed-price or estimated cost, at the time the VECP is accepted, or $100,000, whichever is greater. The Contracting Officer is the sole determiner of the amount of collateral savings.

(h) Subcontracts. The Contractor shall include an appropriate value engineering clause in any subcontract of $50,000 or more and may include one in subcontracts of lesser value. In computing any adjustment in this contract's price under paragraph (f) above, the Contractor's allowable development and implementation costs shall include any subcontractor's allowable development and implementation costs clearly resulting from a VECP accepted by the Government under this contract, but shall exclude any value engineering incentive payments to a subcontractor. The Contractor may choose any arrangement for subcontractor value engineering incentive payments; provided, that these payments shall not reduce the Government's share of the savings resulting from the VECP.

(i) Data. The Contractor may restrict the Government's right to use any part of a VECP or the supporting data by marking the following legend on the affected parts:

"These data, furnished under the Value Engineering-- Construction clause of contract . . . . . , shall not be disclosed outside the Government or duplicated, used, or disclosed, in whole or in part, for any purpose other than to evaluate a value engineering change proposal submitted under the clause. This restriction does not limit the Government's right to use information contained in these data if it has been obtained or is otherwise available from the Contractor or from another source without limitations." If a VECP is accepted, the Contractor hereby grants the Government unlimited rights in the VECP and supporting data, except that, with respect to data qualifying and submitted as limited rights technical data, the Government shall have the rights specified in the contract modification implementing the VECP and shall appropriately mark the data. (The terms "unlimited rights" and "limited rights" are defined in Part 27 of the Federal Acquisition Regulation.)

(End of clause)

52.249-2 TERMINATION FOR CONVENIENCE OF THE GOVERNMENT (FIXED-PRICE) (MAY 2004) - ALTERNATE I (SEP 1996)

(a) The Government may terminate performance of work under this contract in whole or, from time to time, in part if the Contracting Officer determines that a termination is in the Government's interest. The Contracting Officer shall terminate by delivering to the Contractor a Notice of Termination specifying the extent of termination and the effective date.

(b) After receipt of a Notice of Termination, and except as directed by the Contracting Officer, the Contractor shall immediately proceed with the following obligations, regardless of any delay in determining or adjusting any amounts due under this clause:

(1) Stop work as specified in the notice.

(2) Place no further subcontracts or orders (referred to as subcontracts in this clause) for materials, services, or facilities, except as necessary to complete the continued portion of the contract.

(3) Terminate all subcontracts to the extent they relate to the work terminated.

(4) Assign to the Government, as directed by the Contracting Officer, all right, title, and interest of the Contractor under the subcontracts terminated, in which case the Government shall have the right to settle or to pay any termination settlement proposal arising out of those terminations.

(5) With approval or ratification to the extent required by the Contracting Officer, settle all outstanding liabilities and termination settlement proposals arising from the termination of subcontracts; the approval or ratification will be final for purposes of this clause.

(6) As directed by the Contracting Officer, transfer title and deliver to the Government (i) the fabricated or unfabricated parts, work in process, completed work, supplies, and other material produced or acquired for the work

terminated, and (ii) the completed or partially completed plans, drawings, information, and other property that, if the contract had been completed, would be required to be furnished to the Government.

(7) Complete performance of the work not terminated.

(8) Take any action that may be necessary, or that the Contracting Officer may direct, for the protection and preservation of the property related to this contract that is in the possession of the Contractor and in which the Government has or may acquire an interest.

(9) Use its best efforts to sell, as directed or authorized by the Contracting Officer, any property of the types referred to in subparagraph (b)(6) of this clause; provided, however, that the Contractor (i) is not required to extend credit to any purchaser and (ii) may acquire the property under the conditions prescribed by, and at prices approved by, the Contracting Officer. The proceeds of any transfer or disposition will be applied to reduce any payments to be made by the Government under this contract, credited to the price or cost of the work, or paid in any other manner directed by the Contracting Officer.

(c) The Contractor shall submit complete termination inventory schedules no later than 120 days from the effective date of termination, unless extended in writing by the Contracting Officer upon written request of the Contractor within this 120-day period.

(d) After expiration of the plant clearance period as defined in Subpart 49.001 of the Federal Acquisition Regulation, the Contractor may submit to the Contracting Officer a list, certified as to quantity and quality, of termination inventory not previously disposed of, excluding items authorized for disposition by the Contracting Officer. The Contractor may request the Government to remove those items or enter into an agreement for their storage. Within 15 days, the Government will accept title to those items and remove them or enter into a storage agreement. The Contracting Officer may verify the list upon removal of the items, or if stored, within 45 days from submission of the list, and shall correct the list, as necessary, before final settlement.

(e) After termination, the Contractor shall submit a final termination settlement proposal to the Contracting Officer in the form and with the certification prescribed by the Contracting Officer. The Contractor shall submit the proposal promptly, but no later than 1 year from the effective date of termination, unless extended in writing by the Contracting Officer upon written request of the Contractor within this 1-year period. However, if the Contracting Officer determines that the facts justify it, a termination settlement proposal may be received and acted on after 1 year or any extension. If the Contractor fails to submit the proposal within the time allowed, the Contracting Officer may determine, on the basis of information available, the amount, if any, due the Contractor because of the termination and shall pay the amount determined.

(f) Subject to paragraph (e) of this clause, the Contractor and the Contracting Officer may agree upon the whole or any part of the amount to be paid or remaining to be paid because of the termination. The amount may include a reasonable allowance for profit on work done. However, the agreed amount, whether under this paragraph (g) or paragraph (g) of this clause, exclusive of costs shown in subparagraph (g)(3) of this clause, may not exceed the total contract price as reduced by (1) the amount of payments previously made and (2) the contract price of work not terminated. The contract shall be modified, and the Contractor paid the agreed amount. Paragraph (g) of this clause shall not limit, restrict, or affect the amount that may be agreed upon to be paid under this paragraph.

(g) If the Contractor and Contracting Officer fail to agree on the whole amount to be paid the Contractor because of the termination of work, the Contracting Officer shall pay the Contractor the amounts determined as follows, but without duplication of any amounts agreed upon under paragraph (f) of this clause:

(1) For contract work performed before the effective date of termination, the total (without duplication of any items) of--

(i) The cost of this work;

(ii) The cost of settling and paying termination settlement proposals under terminated subcontracts that are properly chargeable to the terminated portion of the contract if not included in subdivision (g)(1)(i) of this clause; and

(iii) A sum, as profit on subdivision (g)(1)(i) of this clause, determined by the Contracting Officer under 49.202 of the Federal Acquisition Regulation, in effect on the date of this contract, to be fair and reasonable; however, if it appears that the Contractor would have sustained a loss on the entire contract had it been completed, the Contracting Officer shall allow no profit under this subdivision (iii) and shall reduce the settlement to reflect the indicated rate of loss.

(2) The reasonable costs of settlement of the work terminated, including--

(i) Accounting, legal, clerical, and other expenses reasonably necessary for the preparation of termination settlement proposals and supporting data;

(ii) The termination and settlement of subcontracts (excluding the amounts of such settlements); and

(iii) Storage, transportation, and other costs incurred, reasonably necessary for the preservation, protection, or disposition of the termination inventory.

(h) Except for normal spoilage, and except to the extent that the Government expressly assumed the risk of loss, the Contracting Officer shall exclude from the amounts payable to the Contractor under paragraph (g) of this clause, the fair value, as determined by the Contracting Officer, of property that is destroyed, lost, stolen, or damaged so as to become undeliverable to the Government or to a buyer.

(i) The cost principles and procedures of Part 31 of the Federal Acquisition Regulation, in effect on the date of this contract, shall govern all costs claimed, agreed to, or determined under this clause.

(j) The Contractor shall have the right of appeal, under the Disputes clause, from any determination made by the Contracting Officer under paragraph (e), (g), or (l) of this clause, except that if the Contractor failed to submit the termination settlement proposal or request for equitable adjustment within the time provided in paragraph (e) or (l), respectively, and failed to request a time extension, there is no right of appeal.

(k) In arriving at the amount due the Contractor under this clause, there shall be deducted--

(1) All unliquidated advance or other payments to the Contractor under the terminated portion of this contract;

(2) Any claim which the Government has against the Contractor under this contract; and

(3) The agreed price for, or the proceeds of sale of, materials, supplies, or other things acquired by the Contractor or sold under the provisions of this clause and not recovered by or credited to the Government.

(l) If the termination is partial, the Contractor may file a proposal with the Contracting Officer for an equitable adjustment of the price(s) of the continued portion of the contract. The Contracting Officer shall make any equitable adjustment agreed upon. Any proposal by the Contractor for an equitable adjustment under this clause shall be requested within 90 days from the effective date of termination unless extended in writing by the Contracting Officer.

(m)(1) The Government may, under the terms and conditions it prescribes, make partial payments and payments against costs incurred by the Contractor for the terminated portion of the contract, if the Contracting Officer believes the total of these payments will not exceed the amount to which the Contractor will be entitled.

(2) If the total payments exceed the amount finally determined to be due, the Contractor shall repay the excess to the Government upon demand, together with interest computed at the rate established by the Secretary of the Treasury under 50 U.S.C. App. 1215(b)(2). Interest shall be computed for the period from the date the excess payment is

received by the Contractor to the date the excess is repaid. Interest shall not be charged on any excess payment due to a reduction in the Contractor's termination settlement proposal because of retention or other disposition of termination inventory until 10 days after the date of the retention or disposition, or a later date determined by the Contracting Officer because of the circumstances.

(n) Unless otherwise provided in this contract or by statute, the Contractor shall maintain all records and documents relating to the terminated portion of this contract for 3 years after final settlement. This includes all books and other evidence bearing on the Contractor's costs and expenses under this contract. The Contractor shall make these records and documents available to the Government, at the Contractor's office, at all reasonable times, without any direct charge. If approved by the Contracting Officer, photographs, microphotographs, or other authentic reproductions may be maintained instead of original records and documents.

(End of clause)

52.249-10 DEFAULT (FIXED-PRICE CONSTRUCTION) (APR 1984)

(a) If the Contractor refuses or fails to prosecute the work or any separable part, with the diligence that will insure its completion within the time specified in this contract including any extension, or fails to complete the work within this time, the Government may, by written notice to the Contractor, terminate the right to proceed with the work (or the separable part of the work) that has been delayed. In this event, the Government may take over the work and complete it by contract or otherwise, and may take possession of and use any materials, appliances, and plant on the work site necessary for completing the work. The Contractor and its sureties shall be liable for any damage to the Government resulting from the Contractor's refusal or failure to complete the work within the specified time, whether or not the Contractor's right to proceed with the work is terminated. This liability includes any increased costs incurred by the Government in completing the work.

(b) The Contractor's right to proceed shall not be terminated nor the Contractor charged with damages under this clause, if--

(1) The delay in completing the work arises from unforeseeable causes beyond the control and without the fault or negligence of the Contractor. Examples of such causes include

(i) acts of God or of the public enemy,

(ii) acts of the Government in either its sovereign or contractual capacity,

(iii) acts of another Contractor in the performance of a contract with the Government,

(iv) fires,

(v) floods,

(vi) epidemics,

(vii) quarantine restrictions,

(viii) strikes,

(ix) freight embargoes,

(x) unusually severe weather, or delays of subcontractors or suppliers at any tier arising from unforeseeable causes beyond the control and without the fault or negligence of both the Contractor and the subcontractors or suppliers;

and

(2) The Contractor, within 10 days from the beginning of any delay (unless extended by the Contracting Officer), notifies the Contracting Officer in writing of the causes of delay. The Contracting Officer shall ascertain the facts and the extent of delay. If, in the judgment of the Contracting Officer, the findings of fact warrant such action, the time for completing the work shall be extended. The findings of the Contracting Officer shall be final and conclusive on the parties, but subject to appeal under the Disputes clause.

(c) If, after termination of the Contractor's right to proceed, it is determined that the Contractor was not in default, or that the delay was excusable, the rights and obligations of the parties will be the same as if the termination had been issued for the convenience of the Government.

The rights and remedies of the Government in this clause are in addition to any other rights and remedies provided by law or under this contract.

(End of clause)

52.253-1 COMPUTER GENERATED FORMS (JAN 1991)

(a) Any data required to be submitted on a Standard or Optional Form prescribed by the Federal Acquisition Regulation (FAR) may be submitted on a computer generated version of the form, provided there is no change to the name, content, or sequence of the data elements on the form, and provided the form carries the Standard or Optional Form number and edition date.

(b) Unless prohibited by agency regulations, any data required to be submitted on an agency unique form prescribed by an agency supplement to the FAR may be submitted on a computer generated version of the form provided there is no change to the name, content, or sequence of the data elements on the form and provided the form carries the agency form number and edition date.

(ix) If the Contractor submits a computer generated version of a form that is different than the required form, then the rights and obligations of the parties will be determined based on the content of the required form.

(End of clause)

252.201-7000 CONTRACTING OFFICER'S REPRESENTATIVE (DEC 1991)

(a) "Definition. Contracting officer's representative" means an individual designated in accordance with subsection 201.602-2 of the Defense Federal Acquisition Regulation Supplement and authorized in writing by the contracting officer to perform specific technical or administrative functions.

(b) If the Contracting Officer designates a contracting officer's representative (COR), the Contractor will receive a copy of the written designation. It will specify the extent of the COR's authority to act on behalf of the contracting officer. The COR is not authorized to make any commitments or changes that will affect price, quality, quantity, delivery, or any other term or condition of the contract.

(End of clause)

252.203-7001 PROHIBITION ON PERSONS CONVICTED OF FRAUD OR OTHER DEFENSE-CONTRACT-RELATED FELONIES (MAR 1999)

(a) Definitions. As used in this clause—

(1) "Arising out of a contract with the DoD" means any act in connection with—

(i) Attempting to obtain;

(ii) Obtaining, or

(iii) Performing a contract or first-tier subcontract of any agency, department, or component of the Department of Defense (DoD).

(2) "Conviction of fraud or any other felony" means any conviction for fraud or a felony in violation of state or Federal criminal statutes, whether entered on a verdict or plea, including a plea of *nolo contendere*, for which sentence has been imposed.

(3) "Date of conviction" means the date judgment was entered against the individual.

(b) Any individual who is convicted after September 29, 1988, of fraud or any other felony arising out of a contract with the DoD is prohibited from serving--

(1) In a management or supervisory capacity on any DoD contract or first-tier subcontract;

(2) On the board of directors of any DoD contractor or first-tier subcontractor;

(3) As a consultant, agent, or representative for any DoD contractor or first-tier subcontractor; or

(4) In any other capacity with the authority to influence, advise, or control the decisions of any DoD contractor or subcontractor with regard to any DoD contract or first-tier subcontract.

(c) Unless waived, the prohibition in paragraph (b) of this clause applies for not less than 5 years from the date of conviction.

(d) 10 U.S.C. 2408 provides that a defense contractor or first-tier subcontractor shall be subject to a criminal penalty of not more than $500,000 if convicted of knowingly—

(1) Employing a person under a prohibition specified in paragraph (b) of this clause; or

(2) Allowing such a person to serve on the board of directors of the contractor or first-tier subcontractor.

(e) In addition to the criminal penalties contained in 10 U.S.C. 2408, the Government may consider other available remedies, such as—

(1) Suspension or debarment;

(2) Cancellation of the contract at no cost to the Government; or

(3) Termination of the contract for default.

(f) The Contractor may submit written requests for waiver of the prohibition in paragraph (b) of this clause to the Contracting Officer. Requests shall clearly identify—

(1) The person involved;

(2) The nature of the conviction and resultant sentence or punishment imposed;

(3) The reasons for the requested waiver; and

(4) An explanation of why a waiver is in the interest of national security.

(g) The Contractor agrees to include the substance of this clause, appropriately modified to reflect the identity and relationship of the parties, in all first-tier subcontracts exceeding the simplified acquisition threshold in Part 2 of the Federal Acquisition Regulation, except those for commercial items or components.

(h) Pursuant to 10 U.S.C. 2408(c), defense contractors and subcontractors may obtain information as to whether a particular person has been convicted of fraud or any other felony arising out of a contract with the DoD by contacting The Office of Justice Programs, The Denial of Federal Benefits Office, U.S. Department of Justice, telephone (202) 616-3507.

(End of clause)

252.203-7002 DISPLAY OF DOD HOTLINE POSTER (DEC 1991)

(a) The Contractor shall display prominently in common work areas within business segments performing work under Department of Defense (DoD) contracts, DoD Hotline Posters prepared by the DoD Office of the Inspector General.

(b) DoD Hotline Posters may be obtained from the DoD Inspector General, ATTN: Defense Hotline, 400 Army Navy Drive, Washington, DC 22202-2884.

(x) The Contractor need not comply with paragraph (a) of this clause if it has established a mechanism, such as a hotline, by which employees may report suspected instances of improper conduct, and instructions that encourage employees to make such reports.

(End of clause)

252.205-7000 PROVISION OF INFORMATION TO COOPERATIVE AGREEMENT HOLDERS (DEC 1991)

(a) Definition.

"Cooperative agreement holder" means a State or local government; a private, nonprofit organization; a tribal organization (as defined in section 4(c) of the Indian Self-Determination and Education Assistance Act (Pub. L. 93-268; 25 U.S.C. 450 (c))); or an economic enterprise (as defined in section 3(e) of the Indian Financing Act of 1974 (Pub. L. 93-362; 25 U.S.C. 1452(e))) whether such economic enterprise is organized for profit or nonprofit purposes; which has an agreement with the Defense Logistics Agency to furnish procurement technical assistance to business entities.

(b) The Contractor shall provide cooperative agreement holders, upon their request, with a list of those appropriate employees or offices responsible for entering into subcontracts under defense contracts. The list shall include the business address, telephone number, and area of responsibility of each employee or office.

(c) The Contractor need not provide the listing to a particular cooperative agreement holder more frequently than once a year.

(End of clause)

252.215-7000 PRICING ADJUSTMENTS (DEC 1991)

The term "pricing adjustment," as used in paragraph (a) of the clauses entitled "Price Reduction for Defective Cost or Pricing Data - Modifications," "Subcontractor Cost or Pricing Data," and "Subcontractor Cost or Pricing Data - Modifications," means the aggregate increases and/or decreases in cost plus applicable profits.

(End of clause)

252.219-7003 SMALL, SMALL DISADVANTAGED AND WOMEN-OWNED SMALL BUSINESS SUBCONTRACTING PLAN (DOD CONTRACTS) (APR. 1996)

This clause supplements the Federal Acquisition Regulation 52.219-9, Small, Small Disadvantaged and Women-Owned Small Business Subcontracting Plan, clause of this contract.

(a) *Definitions. Historically black colleges and universities,* as used in this clause, means institutions determined by the Secretary of Education to meet the requirements of 34 CFR 608.2. The term also means any nonprofit research institution that was an integral part of such a college or university before November 14, 1986.

*Minority institutions,* as used in this clause, means institutions meeting the requirements of section 1046(3) of the Higher Education Act of 1965 (20 U.S.C. 1135d-5(3)). The term also includes Hispanic-serving institutions as defined in section 316(b)(1) of such Act (20 U.S.C. 1059c(b)(1)).

(b) Except for company or division-wide commercial items subcontracting plans, the term *small disadvantaged business,* when used in the FAR 52.219-9 clause, includes historically black colleges and universities and minority institutions, in addition to small disadvantaged business concerns.

(c) Work under the contract or its subcontracts shall be credited toward meeting the small disadvantaged business concern goal required by paragraph (d) of the FAR 52.219-9 clause when:

(1) It is performed on Indian lands or in joint venture with an Indian tribe or a tribally-owned corporation, and

(2) It meets the requirements of 10 U.S.C. 2323a.

(d) Subcontracts awarded to workshops approved by the Committee for Purchase from People Who are Blind or Severely Disabled (41 U.S.C. 46-48), may be counted toward the Contractor's small business subcontracting goal.

(e) A mentor firm, under the Pilot Mentor-Protege Program established under Section 831 of Pub. L. 101-510, as amended, may count toward its small disadvantaged business goal, subcontracts awarded--

(f) The master plan approval referred to in paragraph (f) of the FAR 52.219-9 clause is approval by the Contractor's cognizant contract administration activity.

(g) In those subcontracting plans which specifically identify small, small disadvantaged, and women-owned small businesses, the Contractor shall notify the Administrative Contracting Officer of any substitutions of firms that are not small, small disadvantaged, or women-owned small businesses for the firms listed in the subcontracting plan. Notifications shall be in writing and shall occur within a reasonable period of time after award of the subcontract. Contractor-specified formats shall be acceptable.

(End of clause)

252.219-7011 NOTIFICATION TO DELAY PERFORMANCE (JUN 1998)

The Contractor shall not begin performance under this purchase order until 2 working days have passed from the date of its receipt. Unless the Contractor receives notification from the Small Business Administration that it is ineligible for this 8(a) award, or otherwise receives instructions from the Contracting Officer, performance under this purchase order may begin on the third working day following receipt of the purchase order. If a determination of ineligibility is issued within the 2-day period, the purchase order shall be considered canceled.

(End of clause)

252.223-7001 HAZARD WARNING LABELS (DEC 1991)

(a) "Hazardous material," as used in this clause, is defined in the Hazardous Material Identification and Material Safety Data clause of this contract.

(b) The Contractor shall label the item package (unit container) of any hazardous material to be delivered under this contract in accordance with the Hazard Communication Standard (29 CFR 1910.1200 et seq). The Standard requires that the hazard warning label conform to the requirements of the standard unless the material is otherwise subject to the labeling requirements of one of the following statutes:

(1) Federal Insecticide, Fungicide and Rodenticide Act;

(2) Federal Food, Drug and Cosmetics Act;

(3) Consumer Product Safety Act;

(4) Federal Hazardous Substances Act; or

(5) Federal Alcohol Administration Act.

(c) The Offeror shall list which hazardous material listed in the Hazardous Material Identification and Material Safety Data clause of this contract will be labeled in accordance with one of the Acts in paragraphs (b)(1) through (5) of this clause instead of the Hazard Communication Standard. Any hazardous material not listed will be interpreted to mean that a label is required in accordance with the Hazard Communication Standard.

| MATERIAL (If None, Insert "None.") | ACT |
|---|---|
| _____ | _____ |
| _____ | _____ |

(d) The apparently successful Offeror agrees to submit, before award, a copy of the hazard warning label for all hazardous materials not listed in paragraph (c) of this clause. The Offeror shall submit the label with the Material Safety Data Sheet being furnished under the Hazardous Material Identification and Material Safety Data clause of this contract.

(e) The Contractor shall also comply with MIL-STD-129, Marking for Shipment and Storage (including revisions adopted during the term of this contract).

(End of clause)

252.223-7004 DRUG-FREE WORK FORCE (SEP 1988)

(a) Definitions.

(1) "Employee in a sensitive position," as used in this clause, means an employee who has been granted access to classified information; or employees in other positions that the Contractor determines involve national security; health or safety, or functions other than the foregoing requiring a high degree of trust and confidence.

(2) "Illegal drugs," as used in this clause, means controlled substances included in Schedules I and II, as defined by section 802(6) of title 21 of the United States Code, the possession of which is unlawful under chapter 13 of that Title. The term "illegal drugs" does not mean the use of a controlled substance pursuant to a valid prescription or other uses authorized by law.

(b) The Contractor agrees to institute and maintain a program for achieving the objective of a drug-free work force. While this clause defines criteria for such a program, contractors are encouraged to implement alternative approaches comparable to the criteria in paragraph (c) that are designed to achieve the objectives of this clause.

(c) Contractor programs shall include the following, or appropriate alternatives:

(1) Employee assistance programs emphasizing high level direction, education, counseling, rehabilitation, and coordination with available community resources;

(2) Supervisory training to assist in identifying and addressing illegal drug use by Contractor employees;

(3) Provision for self-referrals as well as supervisory referrals to treatment with maximum respect for individual confidentiality consistent with safety and security issues;

(4) Provision for identifying illegal drug users, including testing on a controlled and carefully monitored basis. Employee drug testing programs shall be established taking account of the following:

(i) The Contractor shall establish a program that provides for testing for the use of illegal drugs by employees in sensitive positions. The extent of and criteria for such testing shall be determined by the Contractor based on considerations that include the nature of the work being performed under the contract, the employee's duties, and efficient use of Contractor resources, and the risks to health, safety, or national security that could result from the failure of an employee adequately to discharge his or her position.

(ii) In addition, the Contractor may establish a program for employee drug testing--

(A) When there is a reasonable suspicion that an employee uses illegal drugs; or

(B) When an employees has been involved in an accident or unsafe practice;

(C) As part of or as a follow-up to counseling or rehabilitation for illegal drug use;

(D) As part of a voluntary employee drug testing program.

(iii) The Contractor may establish a program to test applicants for employment for illegal drug use.

(iv) For the purpose of administering this clause, testing for illegal drugs may be limited to those substances for which testing is prescribed by section 2..1 of subpart B of the "Mandatory Guidelines for Federal Workplace Drug Testing Programs" (53 FR 11980 (April 11, 1988), issued by the Department of Health and Human Services.

(d) Contractors shall adopt appropriate personnel procedures to deal with employees who are found to be using drugs illegally. Contractors shall not allow any employee to remain on duty or perform in a sensitive position who is found to use illegal drugs until such times as the Contractor, in accordance with procedures established by the Contractor, determines that the employee may perform in such a position.

(e) The provisions of this clause pertaining to drug testing program shall not apply to the extent that are inconsistent with state or local law, or with an existing collective bargaining agreement; provided that with respect to the latter, the Contractor agrees those issues that are in conflict will be a subject of negotiation at the next collective bargaining session.

(End of clause)

252.223-7006 PROHIBITION ON STORAGE AND DISPOSAL OF TOXIC AND HAZARDOUS MATERIALS (APR 1993)

(a) "Definitions".

As used in this clause --

(1) "Storage" means a non-transitory, semi-permanent or permanent holding, placement, or leaving of material. It does not include a temporary accumulation of a limited quantity of a material used in or a waste generated or resulting from authorized activities, such as servicing, maintenance, or repair of Department of Defense (DoD) items, equipment, or facilities.

(2) "Toxic or hazardous materials" means:

(i) Materials referred to in section 101(14) of the Comprehensive Environmental Response, Compensation, and Liability Act (CERCLA) of 1980 (42 U.S.C. 9601(14)) and materials designated under section 102 of CERCLA (42 U.S.C. 9602) (40 CFR part 302);

(ii) Materials that are of an explosive, flammable, or pyrotechnic nature; or

(iii) Materials otherwise identified by the Secretary of Defense as specified in DoD regulations.

(b) In accordance with 10 U.S.C. 2692, the Contractor is prohibited from storing or disposing of non-DoD-owned toxic or hazardous materials on a DoD installation, except to the extent authorized by a statutory exception to 10 U.S.C. 2692 or as authorized by the Secretary of Defense or his designee.

(End of clause)

252.225-7016 RESTRICTION ON ACQUISITION OF BALL AND ROLLER BEARINGS (MAY 2004)

(a) Definitions. As used in this clause--

(1) Bearing components means the bearing element, retainer, inner race, or outer race.

(2) Miniature and instrument ball bearings means all rolling contact ball bearings with a basic outside diameter (exclusive of flange diameters) of 30 millimeters or less, regardless of material, tolerance, performance, or quality characteristics.

(b) Except as provided in paragraph (c) of this clause, all ball and roller bearings and ball and roller bearing components (including miniature and instrument ball bearings) delivered under this contract, either as end items or

components of end items, shall be wholly manufactured in the United States or Canada. Unless otherwise specified, raw materials, such as preformed bar, tube, or rod stock and lubricants, need not be mined or produced in the United States or Canada.

(c)(1) The restriction in paragraph (b) of this clause does not apply to ball or roller bearings that are acquired as components if--

(i) The end items or components containing ball or roller bearings are commercial items; or

(ii) The ball or roller bearings are commercial components manufactured in the United Kingdom.

(2) The commercial item exception in paragraph (c)(1) of this clause does not include items designed or developed under a Government contract if the end item is bearings or bearing components.

(d) The restriction in paragraph (b) of this clause may be waived upon request from the Contractor in accordance with subsection 225.7009-3 of the Defense Federal Acquisition Regulation Supplement. If the restriction is waived for miniature and instrument ball bearings, the Contractor shall acquire a like quantity and type of domestic manufacture for nongovernmental use.

(e) The Contractor shall retain records showing compliance with the restriction in paragraph (b) of this clause until 3 years after final payment and shall make the records available upon request of the Contracting Officer.

(f) The Contractor shall insert the substance of this clause, including this paragraph (f), in all subcontracts, except those for--

(1) Commercial items other than ball or roller bearings; or

(2) Items that do not contain ball or roller bearings.

(End of clause)

252.227-7033 RIGHTS IN SHOP DRAWINGS (APR 1966)

(a) Shop drawings for construction means drawings, submitted to the Government by the Construction Contractor, subcontractor or any lower-tier subcontractor pursuant to a construction contract, showing in detail (i) the proposed fabrication and assembly of structural elements and (ii) the installation (i.e., form, fit, and attachment details) of materials or equipment. The Government may duplicate, use, and disclose in any manner and for any purpose shop drawings delivered under this contract.

(b) This clause, including this paragraph (b), shall be included in all subcontracts hereunder at any tier.

252.236-7000 MODIFICATION PROPOSALS - PRICE BREAKDOWN. (DEC 1991)

(a) The Contractor shall furnish a price breakdown, itemized as required and within the time specified by the Contracting Officer, with any proposal for a contract modification.

(b) The price breakdown --

(1) Must include sufficient detail to permit an analysis of profit, and of all costs for --

(i) Material;

(ii) Labor;

(iii) Equipment;

(iv) Subcontracts; and

(v) Overhead; and

(2) Must cover all work involved in the modification, whether the work was deleted, added, or changed.

(c) The Contractor shall provide similar price breakdowns to support any amounts claimed for subcontracts.

(d) The Contractor's proposal shall include a justification for any time extension proposed.

252.236-7006 COST LIMITATION (JAN 1997)

(a)Certain items in this solicitation are subject to statutory cost limitations. The limitations are stated in the Schedule.

(b)An offer which does not state separate prices for the items identified in the Schedule as subject to a cost limitation may be considered nonresponsive.

(c)Prices stated in offers for items subject to cost limitations shall include an appropriate apportionment of all costs, direct and indirect, overhead, and profit.

(d) Offers may be rejected which--

(1)Are materially unbalanced for the purpose of bringing items within cost limitations; or

(2)Exceed the cost limitations, unless the limitations have been waived by the Government prior to award.

252.236-7008 CONTRACT PRICES - BIDDING SCHEDULES. (DEC 1991)

(a) The Government's payment for the items listed in the Bidding Schedule shall constitute full compensation to the Contractor for --

(1) Furnishing all plant, labor, equipment, appliances, and materials; and

(2) Performing all operations required to complete the work in conformity with the drawings and specifications.

(b) The Contractor shall include in the prices for the items listed in the Bidding Schedule all costs for work in the specifications, whether or not specifically listed in the Bidding Schedule.

252.243-7001 PRICING OF CONTRACT MODIFICATIONS (DEC 1991)

When costs are a factor in any price adjustment under this contract, the contract cost principles and procedures in FAR part 31 and DFARS part 231, in effect on the date of this contract, apply.

252.243-7002 REQUESTS FOR EQUITABLE ADJUSTMENT (MAR 1998)

(a) The amount of any request for equitable adjustment to contract terms shall accurately reflect the contract adjustment for which the Contractor believes the Government is liable. The request shall include only costs for performing the change, and shall not include any costs that already have been reimbursed or that have been separately claimed. All indirect costs included in the request shall be properly allocable to the change in accordance with applicable acquisition regulations.

(b) In accordance with 10 U.S.C. 2410(a), any request for equitable adjustment to contract terms that exceeds the simplified acquisition threshold shall bear, at the time of submission, the following certificate executed by an individual authorized to certify the request on behalf of the Contractor:

I certify that the request is made in good faith, and that the supporting data are accurate and complete to the best of my knowledge and belief.

---
(Official's Name)
---
(Title)

(c) The certification in paragraph (b) of this clause requires full disclosure of all relevant facts, including--

(1) Cost or pricing data if required in accordance with subsection 15.403-4 of the Federal Acquisition Regulation (FAR); and

(2) Information other than cost or pricing data, in accordance with subsection 15.403-3 of the FAR, including actual cost data and data to support any estimated costs, even if cost or pricing data are not required.

(d) The certification requirement in paragraph (b) of this clause does not apply to----

(1) Requests for routine contract payments; for example, requests for payment for accepted supplies and services, routine vouchers under a cost-reimbursement type contract, or progress payment invoices; or

(2) Final adjustment under an incentive provision of the contract.

252.247-7023 TRANSPORTATION OF SUPPLIES BY SEA (MAY 2002) ALTERNATE III (MAY 2002)

(a) Definitions. As used in this clause --

(1) "Components" means articles, materials, and supplies incorporated directly into end products at any level of manufacture, fabrication, or assembly by the Contractor or any subcontractor.

(2) "Department of Defense" (DoD) means the Army, Navy, Air Force, Marine Corps, and defense agencies.

(3) "Foreign flag vessel" means any vessel that is not a U.S.-flag vessel.

(4) "Ocean transportation" means any transportation aboard a ship, vessel, boat, barge, or ferry through international waters.

(5) "Subcontractor" means a supplier, materialman, distributor, or vendor at any level below the prime contractor

whose contractual obligation to perform results from, or is conditioned upon, award of the prime contract and who is performing any part of the work or other requirement of the prime contract.

(6) "Supplies" means all property, except land and interests in land, that is clearly identifiable for eventual use by or owned by the DoD at the time of transportation by sea.

(i) An item is clearly identifiable for eventual use by the DoD if, for example, the contract documentation contains a reference to a DoD contract number or a military destination.

(ii) "Supplies" includes (but is not limited to) public works; buildings and facilities; ships; floating equipment and vessels of every character, type, and description, with parts, subassemblies, accessories, and equipment; machine tools; material; equipment; stores of all kinds; end items; construction materials; and components of the foregoing.

(7) "U.S.-flag vessel" means a vessel of the United States or belonging to the United States, including any vessel registered or having national status under the laws of the United States.

(b)(1) The Contractor shall use U.S.-flag vessels when transporting any supplies by sea under this contract.

(2) A subcontractor transporting supplies by sea under this contract shall use U.S.-flag vessels if--

(i) This contract is a construction contract; or

(ii) The supplies being transported are--

(A) Noncommercial items; or

(B) Commercial items that--

(1) The Contractor is reselling or distributing to the Government without adding value (generally, the Contractor does not add value to items that it contracts for f.o.b. destination shipment);

(2) Are shipped in direct support of U.S. military contingency operations, exercises, or forces deployed in humanitarian or peacekeeping operations; or

(3) Are commissary or exchange cargoes transported outside of the Defense Transportation System in accordance with 10 U.S.C. 2643.

(c) The Contractor and its subcontractors may request that the Contracting Officer authorize shipment in foreign-flag vessels, or designate available U.S.-flag vessels, if the Contractor or a subcontractor believes that --

(1) U.S.-flag vessels are not available for timely shipment;

(2) The freight charges are inordinately excessive or unreasonable; or

(3) Freight charges are higher than charges to private persons for transportation of like goods.

(d) The Contractor must submit any request for use of other than U.S.-flag vessels in writing to the Contracting Officer at least 45 days prior to the sailing date necessary to meet its delivery schedules. The Contracting Officer will process requests submitted after such date(s) as expeditiously as possible, but the Contracting Officer's failure to grant approvals to meet the shipper's sailing date will not of itself constitute a compensable delay under this or any other clause of this contract. Requests shall contain at a minimum --

(1) Type, weight, and cube of cargo;

(2) Required shipping date;

(3) Special handling and discharge requirements;

(4) Loading and discharge points;

(5) Name of shipper and consignee;

(6) Prime contract number; and

(7) A documented description of efforts made to secure U.S.-flag vessels, including points of contact (with names and telephone numbers) with at least two U.S.-flag carriers contacted. Copies of telephone notes, telegraphic and facsimile message or letters will be sufficient for this purpose.

(e) The Contractor shall, within 30 days after each shipment covered by this clause, provide the Contracting Officer and the Maritime Administration, Office of Cargo Preference, U.S. Department of Transportation, 400 Seventh Street SW., Washington, DC 20590, one copy of the rated on board vessel operating carrier's ocean bill of lading, which shall contain the following information:

(1) Prime contract number;

(2) Name of vessel;

(3) Vessel flag of registry;

(4) Date of loading;

(5) Port of loading;

(6) Port of final discharge;

(7) Description of commodity;

(8) Gross weight in pounds and cubic feet if available;

(9) Total ocean freight in U.S. dollars; and

(10) Name of the steamship company.

(f) The Contractor shall insert the substance of this clause, including this paragraph (f), in subcontracts that are for a type of supplies described in paragraph (b)(2) of this clause.

(End of clause)

CLAUSES INCORPORATED BY FULL TEXT

52.211-10 COMMENCEMENT, PROSECUTION, AND COMPLETION OF WORK (APR 1984)

The Contractor shall be required to (a) commence work under this contract within 10 calendar days after the date the Contractor receives the notice to proceed, (b) prosecute the work diligently, and (c) complete the entire work ready for use not later than 540 calendar days from receipt of Notice to Proceed. The time stated for completion shall include final cleanup of the premises.

(End of clause)

52.211-12 LIQUIDATED DAMAGES--CONSTRUCTION (SEP 2000)

(a) If the Contractor fails to complete the work within the time specified in the contract, the Contractor shall pay liquidated damages to the Government in the amount of $2,731.00 for each calendar day of delay until the work is completed or accepted.

(b) If the Government terminates the Contractor's right to proceed, liquidated damages will continue to accrue until the work is completed. These liquidated damages are in addition to excess costs of repurchase under the Termination clause.

(End of clause)

E4LC11 DEPARTMENT OF LABOR WAGE DECISION (CONSTRUCTION)

Any contract awarded as a result of this solicitation will be subject to the U.S. Department of Labor Wage Decision(s) provided

General Decision Number: VA030018 06/18/2004 VA18

Superseded General Decision Number: VA020018

State: Virginia

Construction Types: Heavy

Counties: Gloucester, Hampton*, James*, Newport News*,
Poquoson*, Williamsburg* and York Counties in Virginia.

*INDEPENDENT CITIES

HEAVY CONSTRUCTION PROJECTS (Excluding Sewer and Water Lines)

Modification Number Publication Date

| | |
|---|---|
| 0 | 06/13/2003 |
| 1 | 04/02/2004 |
| 2 | 05/14/2004 |
| 3 | 06/18/2004 |

ASBE0085-002 03/01/2003

| | Rates | Fringes |
|---|---|---|
| Asbestos Workers/Insulator Includes the application of all insulating materials, protective coverings, coatings and finishes to all types of mechanical systems. Also the application of firestopping material for wall openings and penetrations in walls, floors, ceilings and curtain walls..... | $ 20.53 | 5.94 |

---

BOIL0045-002 01/01/2004

| | Rates | Fringes |
|---|---|---|
| Boilermaker..... | $ 26.01 | 15.36 |

---

CARP0613-002 05/01/2002

| | Rates | Fringes |
|---|---|---|
| Carpenter and Piledriver..... | $ 17.79 | 4.24+2% |

---

* ELEC0666-006 12/01/2003

James City County

| | Rates | Fringes |
|---|---|---|
| Electricians:..... | $ 23.82 | 26.75% |

---

ELEC1340-001 12/01/2003

| | Rates | Fringes |
|---|---|---|
| Electrician..... | $ 20.00 | 3.15+11.25% |

---

ELEC1340-003 12/01/2003

| | Rates | Fringes |
|---|---|---|

Linemen
LINEMEN and CABLE SPLICERS
Beyond Route 460 and
South of the Piankatank
River.....$ 21.00 3.15+11.25%
LINEMEN and CABLE SPLICERS
Beyond North of Route 460
and South of the
Piankatank River.....$ 19.00 2.25+11%
From 7812 Warwick Blvd.,
Newport News, Virginia,
to North of Route 460 and
South of the Piankatank
River, and shall also
include the boundaries of
Newport News and York
County, including Fort
Eustis, Naval Mine Depot,
Naval Mine Warfare
School, BP/Amoco Oil
Refinery, VEPCO Yorktown
Generating Station,
Cheatham Annex, Camp
Peary and any work in
Gloucester County.....$ 20.00 3.15+11.25%
From 7812 Warwick Blvd.,
Newport News, Virginia,
to North of Route 460 and
South of the Piankatank
River, including the
boundaries of Newport
News and York County,
including Fort Eustis,
Naval Mine Depot, Naval
Mine Warfare School,
American Oil Refinery,
VEPCO, Yorktown
Generating Station,
Cheatham Annex, Camp
Peary and Gloucester County$ 18.00 2.25+11%

---

ENGI0147-001 05/01/2002

Rates Fringes

Power equipment operators:
Cranes and Mechanics.....$ 19.38 6.43
Fork Lift.....$ 15.50 6.43
Oilers.....$ 12.02 6.43

---

ENGI0147-009 05/01/1995

Rates Fringes

Power equipment operators:
(Pipeline)
Backhoes.....$ 23.54 5.46
Boring Machine.....$ 17.46 4.96
Bulldozers.....$ 23.54 5.46
Cranes.....$ 23.54 5.46
Oilers.....$ 12.07 3.96
Side Boom.....$ 23.54 5.46

---

IRON0079-005 05/01/2004

Rates Fringes

Ironworker, reinforcing and
structural.....$ 20.55 8.25

---

* PAIN0051-008 06/16/2001

Rates Fringes

Painters:
Bridges, Heavy Highway,
Lead Abatement and
Thermal/Flame Spray.....$ 19.05 6.16
Bridges, Heavy Industrial
Plants, Mills or any
Tanks, Structural Steel,
Sandblasting.....$ 15.40 4.91

---

PLAS0229-001 05/01/1999

Rates Fringes

Cement Mason.....$ 15.60 2.55

---

PLUM0540-004 05/01/2000

Rates Fringes

Plumbers and Pipefitters.....$ 20.25 6.37

---

SUVA1993-002 06/22/1993

Rates Fringes

Bricklayer.....$ 15.15
Laborers:
Laborers (Including Mason
Tenders, Brick).....$ 7.61 1.08
Landscape Laborers.....$ 7.71
Pipelayers.....$ 8.16 1.00
Power equipment operators:
Backhoes.....$ 11.46
Bulldozers.....$ 11.77 1.82

Excavators.....$ 12.65 2.04
Loaders.....$ 11.02 2.10
Rollers.....$ 9.21
Truck Driver.....$ 8.63
---

WELDERS - Receive rate prescribed for craft performing operation to which welding is incidental.
==========

Unlisted classifications needed for work not included within the scope of the classifications listed may be added after award only as provided in the labor standards contract clauses (29CFR 5.5 (a) (1) (ii)).

---

In the listing above, the "SU" designation means that rates listed under the identifier do not reflect collectively bargained wage and fringe benefit rates. Other designations indicate unions whose rates have been determined to be prevailing.

---

WAGE DETERMINATION APPEALS PROCESS

1.) Has there been an initial decision in the matter? This can be:

* an existing published wage determination
* a survey underlying a wage determination
* a Wage and Hour Division letter setting forth a position on a wage determination matter
* a conformance (additional classification and rate) ruling

On survey related matters, initial contact, including requests for summaries of surveys, should be with the Wage and Hour Regional Office for the area in which the survey was conducted because those Regional Offices have responsibility for the Davis-Bacon survey program. If the response from this initial contact is not satisfactory, then the process described in 2.) and 3.) should be followed.

With regard to any other matter not yet ripe for the formal process described here, initial contact should be with the Branch of Construction Wage Determinations. Write to:

Branch of Construction Wage Determinations

Wage and Hour Division

U.S. Department of Labor

200 Constitution Avenue, N.W.

Washington, DC 20210

2.) If the answer to the question in 1.) is yes, then an interested party (those affected by the action) can request review and reconsideration from the Wage and Hour Administrator (See 29 CFR Part 1.8 and 29 CFR Part 7). Write to:

Wage and Hour Administrator

U.S. Department of Labor

200 Constitution Avenue, N.W.

Washington, DC 20210

The request should be accompanied by a full statement of the interested party's position and by any information (wage payment data, project description, area practice material, etc.) that the requestor considers relevant to the issue.

3.) If the decision of the Administrator is not favorable, an interested party may appeal directly to the Administrative Review Board (formerly the Wage Appeals Board). Write to:

Administrative Review Board

U.S. Department of Labor

200 Constitution Avenue, N.W.

Washington, DC 20210

4.) All decisions by the Administrative Review Board are final.

==========

END OF GENERAL DECISION

E4LC12 REQUIRED INSURANCE

The contractor shall procure and maintain during the entire period of performance under this contract, the following minimum insurance:

| TYPE | AMOUNT |
|---|---|
| Workers Compensation | As required by State law |
| Employer's Liability | $100,000 per person |
| General Liability | $500,000 per occurrence |
| Motor Vehicle Liability | |

| | |
|---|---|
| (for each motor vehicle): | |
| Bodily injury or death | $200,000 per person |
| | $500,000 per occurrence |
| Property damage | $20,000 per occurrence |

Prior to commencement of work hereunder, the contractor shall furnish to the Contracting Officer a certificate or written statement of the above required insurance. The policies evidencing required insurance shall contain an endorsement to the effect that cancellation or any material change in the policies adversely affecting the interests of the Government in such insurance shall not be effective for such period as may be prescribed by the laws of the State in which this contract is to be performed and in no event less than 30 days after written notice thereof to the Contracting Officer.

E4LC 14 PERFORMANCE EVALUATION OF CONTRACTOR

As a minimum, the Contractor's performance will be evaluated upon final acceptance of the work. However, interim evaluations may be prepared at any time during contract performance when determined to be in the best interest of the Government. The format for the evaluation will be DD Form 2626, and the Contractor will be rated either "Outstanding," "Satisfactory," or "Unsatisfactory" in the areas of Contractor Quality Control, Timely Performance, Effectiveness of Management, Compliance with Labor Standards, and Compliance with Safety Standards. The Contractor will be advised on any unsatisfactory rating, either in an individual element or in the overall rating, prior to completing the evaluation; all contractor comments will be made a part of the official record. In compliance with DOD FAR Supplement 236.201, Performance Evaluation Reports will be available to all DOD Contracting Offices for their future use in determining contractor responsibility.

E4LC15 LOCATION OF SITE ON A GOVERNMENT RESERVATION

The site of the work is on a government reservation and all rules and regulations issued by the Commanding Officer covering general safety, security, and sanitary requirements, etc., shall be observed by the contractor.

E4LC16 ACCIDENT PREVENTION PLAN

In accordance with the clause entitled "Accident Prevention," the contractor will not be allowed to commence work on the job site until an acceptable accident prevention plan has been submitted. The contractor will receive official notification of the acceptance of his accident prevention plan.

E4LC22 PARTNERING

In order to most effectively accomplish this contract, the Government is willing to form a cohesive partnership with the Contractor and its subcontractors. This partnership would strive to draw on the strengths of each organization in an effort to achieve a quality project done right the first time, within budget, and on schedule. This partnership would be bilateral in make-up and participation will be totally voluntary. Any cost associated with affecting this partnership will be agreed to by both parties and will be shared equally with no change in contract price.

E4LC28 IDENTIFICATION OF CORRESPONDENCE

All correspondence and data submitted by the contractor under this contract shall reference the contract number.

E4LC29 AGENTS

Offers signed by an Agent must be made in the name of the Principal and must be accompanied by evidence of said Agent’s authority to act on behalf of its Principal.

E4LC46 UNAUTHORIZED INSTRUCTIONS FROM GOVERNMENT OR OTHER PERSONNEL

The contractor shall not accept instructions issued by any person, employed by the U.S. Government or otherwise, other than the Contracting Officer or the Authorized Representative of the Contracting Officer acting within the limits of his/her authority as defined in the Designation of Authority letter. A copy of the Designation of Authority letter will be furnished to the contractor at time of contract award.

E4LC49 DESIGNATION OF AUTHORIZED REPRESENTATIVE OF THE CONTRACTOR

The Contractor shall assign a number or employee who will act as Project Manager during the course of this contract or during the course of a delivery order. This official shall be responsible for affording liaison between the contract forces and the contracting office(s). This designation shall be in writing with a copy furnished to the Contracting Officer.

E4LC59 PHYSICAL DATA (APR 1984)

Data and information furnished or referred to below is for the Contractor's information. The Government shall not be responsible for any interpretation of or conclusion drawn from the data or information by the Contractor.

(a) The indications of physical conditions on the drawings and in the specifications are the result of site investigations by the methods identified in Division 1 of the specification.

(b) Weather conditions: See Division 1 of the specification.

(c) Transportation facilities: See Division 1 of the specification.

(d) Other Physical Data: See Division 1 of the specification.

(End of clause)

# SECTION 00110
# PROPOSAL SUBMISSION REQUIREMENTS AND INSTRUCTIONS

# SECTION 00110
# PROPOSAL SUBMISSION REQUIREMENTS AND INSTRUCTIONS

## 1.00 PROPOSAL SUBMISSION INSTRUCTIONS.

a. General. Inasmuch as this proposal will describe the capability of the offeror to perform any resultant contract, it should be specific and complete in every detail. The proposal should be prepared simply and economically, providing straight-forward, concise delineation of capabilities to perform satisfactorily the contract being sought. The proposal should therefore be practical, legible, clear and coherent.

b. Format of Proposals. In order that the evaluation may be accomplished strictly on the merit of the material submitted, no dollar amounts for the proposed work are to be included in the proposal. In order that the evaluation may be accomplished efficiently, the evaluation criteria listed below in this section are to be addressed in order. **WARNING:** The proposals are evaluated in direct correspondence to the evaluation criteria which are included in Section 00120. It is in the best interest of the offerors to format the proposal in the order of the evaluation criteria. If the offeror fails to provide information relating to the criteria or locates the information in another part of the proposal without providing any cross references, the offeror runs the risk of having their proposal receive a lower evaluation by the Government evaluators who were not able to locate the appropriate information.

c. The proposal shall contain:

(1) Title Page, including the title of the solicitation, solicitation number, and date of the submittal.

(2) Table of Contents, including a list of tables or exhibits.

d. Exceptions to the contractual terms and conditions of the solicitation (e.g., standard company terms and conditions) must not be included in the proposal.

## 2.00 PROPOSAL REQUIREMENTS:

a. Who May Submit.

(1) Proposals may be submitted by: construction contractors that have associated specifically for this project.

b. General Requirements.

(1) In order to effectively and equitably evaluate all proposals, the Contracting Officer must receive information sufficiently detailed to clearly indicate the personnel references provided.

c. Size of Printed Matter Submissions.

(1) Written materials: Size A4 [or 8-1/2" x 11"] format. Proposal shall be limited to a maximum of 80 typewritten pages (excluding Subcontracting Plan). The government will review only 80 pages. Any documentation beyond the 80 pages will not be evaluated by the technical evaluation board.

d. Where to Submit. Offerors shall submit their proposal packages to Norfolk District at the address shown in Block 8 of Standard Form 1442.

e. Submission Deadline. Proposals shall be received by the Norfolk District] no later than the time and date specified in Block 13 of Standard Form 1442.

f. Proposal Requirements and Submission Format. The proposals sought by this solicitation shall contain three categories of submittal information as follows. The submission requirements shall be in accordance with Section 00120.

(1) Construction Contractor Experience. This information shall be submitted in separate three-ring binders labeled "Construction Contractor Experience". Provide original and three copies.

(2) Offeror's Key Personnel Qualifications and Construction Experience. This information shall be submitted in separate three-ring binders labeled "Key Personnel". Provide original and three copies.

(3) Offeror's Subcontractors Qualifications and Construction Experience. This information shall be submitted in separate three-ring binders labeled "Subcontractors Qualifications". Provide original and three copies.

(4) Technical Past Performance Minimum Requirements. This information shall be submitted in separate three-ring binders labeled "Technical Past Performance". Provide original and three copies.

(5) Required Small Business Information. This information shall be submitted in separate three-ring binders labeled "Small Business Information". Provide original and three copies.

(6) Subcontracting Plan. This information shall be submitted in separate three-ring binders labeled "Subcontracting Plan". Provide original and three copies.

(7) Price (Using the Evaluated Total Cost Method)

(3) Pro Forma requirements. This information should be submitted in an envelope labeled "Pro Forma Requirements." This category consists of representations and certifications, subcontracting plan, proposal bonds, completed Standard Form 1442, and schedule of proposed prices. Provide original and one (1) copy along.

(4) The proposals shall contain a detailed table of contents. If more than one binder is used, the complete table of contents shall be included in each. Any materials submitted but not required by this solicitation, (such as company brochures), shall be relegated to appendices.

i. Nonresponsive proposals. Failure to submit all the data indicated in this section may be cause for determining a proposal nonresponsive and, therefore, not considered for evaluation or award.

# SECTION 00120
# PROPOSAL EVALUATION AND CONTRACT AWARD

# SECTION 00120
# PROPOSAL EVALUATION AND CONTRACT AWARD

## 1. PROPOSAL EVALUATION.

The major factors in the evaluation of proposals received in response to this solicitation are as follows:

FACTOR 1 PAST PERFORMANCE

The major factors of consideration in the evaluation of proposals received in response to this solicitation are as follows. The factors are in descending order of importance.

| | |
|---|---|
| FACTOR 1 | Construction Contractor Experience |
| FACTOR 2 | Offeror's Key Personnel Qualifications and Construction Experience |
| FACTOR 3 | Offeror's Subcontractor's Qualifications and Construction Experience |
| FACTOR 4 | Technical Past Performance |
| FACTOR 5 | Small Business Information |
| FACTOR 6 | Subcontracting Plan |

## 2. EVALUATION PROCESS

The proposal and evaluation process for this project will take place in one step. The proposers responses to these requirements will be evaluated with respect to the evaluation criteria set forth below.

## 3. BASIS OF AWARD

(1). The Government will award a firm fixed-price contract to that responsible Offeror whose proposal, conforming to the solicitation, is fair and reasonable, and has been determined to be most advantageous to the Government, quality (comprised of technical approach and performance capability factors), price and other factors considered. The rated evaluation criteria and price are considered approximately equal. As evaluation scores and relative advantages and disadvantages become less distinct, differences in price between proposals are of increased importance in determining the most advantageous proposal. Conversely, as differences in price become less distinct, differences in scoring and relative advantages and disadvantages between proposals are of increased importance to the determination.

(2). The Government reserves the right to accept other than the lowest priced offer. The right is also reserved to reject any and all offers. The basis of award will be a conforming offer, the price or cost of which may or may not be the lowest. If other than the lowest priced offer is accepted, that offer must be sufficiently more advantageous than the lowest priced offer to justify the payment of additional amounts.

(3). Offerors are reminded to include their best technical and price terms in their initial offer and not to automatically assume that they will have an opportunity to participate in discussions or be asked to submit a revised offer. The Government may make award of a conforming proposal without discussions, if deemed to be within the best interests of the Government.

## 4. EVALUATION CRITERIA: The factors are listed in descending order of importance.

FACTOR 1: Construction Contractor Experience

Submission Requirements

The offeror should specifically include work performed that is similar in nature, magnitude, and complexity to the work described in this solicitation (i.e. hydrant fuel construction on a completed system and successful start-up of a military or civilian Hydrant Fueling System with features such as a 2400 gpm pumphouse, hydrant control pits, and an aboveground fuel storage tank with fixed roof and floating pans in the range of $5,000,000 to $15,000,000 or higher. The following information shall be submitted on each project:

| |
|---|
| Project Title & Location |
| Project Type (e.g., design-build (DB), design (D), construction (C)) |
| Dollar Value (design $; construction $) |
| Start & Completion Dates (Month/Year) |
| Role of Firm(s) (e.g., prime, sub) (address type of work performed and percentage of work, as applicable) |
| Brief Description of Project (address how this relates to solicitation project) |
| Customer Point of Contact (i.e., name, relationship to project, agency/firm affiliation, city, state, current phone no.) |
| Awards or recognition received (if applicable) |
| Firms on the proposed team that performed this project |

Evaluation

This criterion will be evaluated for the quantity and quality of experience demonstrated. The greater the relevance and the more recent the prior project experience, the higher the rating assigned during evaluations. Demonstration of experience in completing projects that had the unique characteristics of the proposed project will be evaluated favorably. Projects involving construction and completed start-up of a pressurized aircraft fueling system with attributes similar to those specified above will be evaluated favorably. Prior Government or Corps of Engineers project experience is not required to meet the minimum requirements of this criteria, however, it will be favorably considered.

FACTOR 2: Offeror’s Key Personnel Qualifications and Construction Experience

Submission Requirements

The Offeror must demonstrate specific project experience (minimum of one project, similar to this project, within the last 5 years) of each of its Key Personnel (Construction Project Manager, Project Superintendent and Contractor Quality Control (CQC) System Manager) that are assigned to this project. The offeror should submit the names and resumes for key construction personnel that will be assigned to this project. In addition, provide a summary of the duties and responsibilities of these individuals that clearly indicate separate duties and responsibilities for each individual. Note that each of the

listed personnel must have separate and distinct responsibilities – no single person shall be designated as performing the duties of more than one position. The proposal should clearly present the credentials of each person and show that each meets the requirements listed below. Each resume should include examples of project experience (including what capacity the individual served on each project), as well as the dates (month and year) employed on each project in that capacity, and the monetary size of each project cited as experience. Resumes should be listed in reverse chronological order, with the latest experience listed first, and all time gaps on each resume fully explained. In addition, the educational qualifications of the proposed personnel should be submitted. As a minimum, the following information showing similar experience of its Key Personnel for each project shall be provided:

a. Name, Assigned Position, and Company this Key Person Worked for,

b. Project title and location,

c. Dollar value of construction,

d. Construction period (month/year start to month/year end),

e. Brief description of how the project meets the requirements of this criterion, and

f. Current primary POC for the customer (name, relationship to project, agency/firm affiliation, city and state, and phone number).

Offerors must provide documentation that demonstrates compliance with required qualifications of the proposed Construction Project Manager, Project Superintendent, and Contractor Quality Control (CQC) System Manager. This documentation may include resumes or other statements demonstrating the experience of these individuals. For project experience, listed under qualifications, provide the same information as described in 2.1.1 above.

**a. Construction Project Manager**.

The proposed Construction Project Manager shall possess a Bachelor's Degree in Engineering or Sciences, with a minimum of 5 years experience in Construction Project Management. A minimum of 2 of those 5 years as experience in construction and installation of Hydrant Fueling System for completed systems.

**b. Contractor Quality Control (CQC) System Manager**.

The CQC System Manager must be either:

Possess a Bachelor's Degree in Engineering or Sciences with a minimum of 2 years experience in construction of the installation of Hydrant Fueling System for completed systems.

Have a minimum of 8 years construction experience as a Construction CQC or Superintendent with a minimum of 2 of those 8 years as experience in construction of the installation of Hydrant Fueling System for completed systems.

**c. On-Site Project Superintendent.**

The proposed On-Site Project Superintendent shall have a minimum of 5 years construction related experience as a superintendent on industrial construction projects with a minimum of 2 of those 5 years as experience with the construction of the installation of Hydrant Fueling Systems.

Evaluation

The more recent, and the greater the extent and relevance, of the team members' qualifications, prior project experience, and active registrations, the higher the rating assigned for this criterion during evaluations. The overall evaluation will be based on the least qualified individual proposed for each key personnel category listed above. In addition, the proposed personnel will be reviewed to ensure the requirements for the position identified are met. Evaluation ratings may be reduced for those not meeting the requirements identified above for this factor, and for resumes not providing the information requested. Prior experience on military construction projects and projects of this type and size is preferred and will be evaluated more favorably.

FACTOR 3: Offeror's Subcontractor's Qualifications and Construction Experience

Submission Requirements

Provide examples of construction projects similar to that described in this RFP in which these subcontractor(s) have been involved. Project examples must be similar to those required in paragraph 2.1.2 above. In lieu of "Name, Assigned Position, and Company this Key Person Worked for", substitute "Name of Subcontractor". Also, identify subcontractors' current key personnel (including their roles) involvement with the projects by name, or identify if the work is to be self-performed.

**a. Mechanical [Fuels]**

**b. Electrical [Class I, Division I Fuels Experience]**

c. Steel Fabricator/Erector (Fuel Tank).

Steel Fabricator/Erector (Fuel Tank) will be required to show that they have experience in construction of 5,000 barrel or larger fuel storage tanks (as a minimum).

**d. Airfield Pavement**:

The Contractor will be required to show that they have experience in construction of 13-inch thick Portland Cement Concrete (PCC) Paving (as a minimum).

**e. System Supplier**:

The proposed system supplier/installer shall have been regularly engaged in Hydrant Fueling Systems installation work for at least 5 years. The Offeror shall provide a listing indicating that the system supplier has installed at least five similar Programmable Logical Controllers (PLC) based pump control systems for automatic cycling of pumps based upon varying dispensing demands utilizing multiple pumps for dispensing jet fuel into aircraft in the last 5-year period. The Offeror shall provide locations and dates for all of the listed systems that have successfully operated over the last three years and are still currently in service.

Evaluation

The resumes and past performance ratings of the proposed mechanical and electrical sub-contractors, steel fabricator/erector and airfield paving subcontractors will be evaluated. CCASS ratings will be pulled by the Norfolk District for the all proposed sub-contractors and evaluated. Higher evaluation ratings will be awarded for resumes demonstrating exceptional qualifications and for Outstanding evaluations. In descending order, lower ratings may be given for past evaluations of Above Average, Satisfactory, Marginal, and Unsatisfactory. If an offeror has no past performance evaluations within the CCASS database, a neutral rating will be awarded for the performance rating portion of this factor.

FACTOR 4: Technical Past Performance

.Pre-Award Survey Information, including:

(1) Financial:
a. Name, address, and fax number of Financial Institution
b. Name and phone number of finance individual (primary and alternate) to be contacted for information

(2) Bonding Information: Provide the name, address, regular phone number, and fax number of the offeror's Surety Company.

FACTOR 5: Small Business Information

The Offeror, **if not a Small Business Concern**, should demonstrate through submission of a narrative how the firm plans to identify, commit and utilize Small Business **(SB)**, Small Disadvantaged Business **(SDB)**, HUBZone Small Business, Women-owned Small Business **(WOSB)** concerns, and Service-Disabled Veterans **(SDV)** as team members,

subcontractors and/or suppliers in the performance of the resultant contract of this solicitation. (A Small Business Subcontracting Plan is not required as part of this Tab but should be included in Tab 7, Pricing). It is the policy of the U.S. Army Corps of Engineers, Norfolk District that small business concerns have the maximum practicable opportunity to participate in performing contracts let by the Contracting Activity. It is further the policy of the Norfolk District that its prospective prime contractors **(Large Business Only)** demonstrate the extent they plan to utilize small business concerns in any resultant contract and provide assurance in its offer that small business concerns will have maximum subcontracting opportunities in its prime contracts. If the contractor is a Small Business Concern, this tab may include a single sheet stating that the contractor is a Small Business Concern, in lieu of compiling the information requested herein. **If the Offeror is a Small Business Concern, this Tab shall be rated "Exceptional".** The evaluation of utilization and participation of small business concerns is separate and distinct from the requirement at Federal Acquisition Regulation (FAR) Clause 52.219-9, Small Business Subcontracting Plan. The Subcontracting plan shall be evaluated in accordance with AFARS 5115, Appendix D.

**1. Definitions**:

**a. Small Business Concerns.** For the purpose of this section, small business concerns refer to Small Business, Small Disadvantaged Business, Women-owned Small Business, HUBZone Small Business, and Service-Disabled Veterans.

**b. Prime Contractor.** For the purpose of this section, a prime contractor refers to both large and small contractors.

**c. Offeror.** For the purpose of this section, offeror refers to both large and small contractors.

**d. Target.** "Target" is the term the U.S. Army Corps of Engineers uses to replace "floor" or "goal". It represents the minimum level for small business performance.

2. The Offeror's proposal **(if a large business),** should demonstrate the utilization and participation of small business concerns. The proposal should clearly state factors that demonstrate a strong commitment to use small business concerns. Enforceable commitments to use small business concerns will be weighed more heavily than non-enforceable ones.

**b. Past Performance in Meeting Small Business Floors**. The offeror should demonstrate how floors for Small Business participation were satisfied on previous contracts. The information should show to what extent the prime has historically been successful in establishing realistic yet challenging goals and evidences ability to achieve them. The Offeror should submit data on Past Performance in meeting small business goals which will demonstrate how goals for small business concerns participation on previous contracts were satisfied. The data to be provided should include: (1) Client/Customer, (2) Contract/Identification Number, (3) Project Description, (4) Contract Amount, (5) Goals

established for that project, (6) Actual percentages met for that contract, (7) Reference or Point of Contract (to include address and telephone number).

**c. Demonstrate utilization and participation of small business concerns**, clearly stated factors that demonstrate strong commitments to use SB, SDB, WOSB, SDVSB, and HubZone entities as team members, subcontractors, and/or suppliers.

**d. Description of supplies and services to be subcontracted** and planned for subcontracting to SB's, SDB's, WOSB's , SDVSB's, and HUB-Zones.

FACTOR 6: Subcontracting Plan

**Assurance that the offeror will include the clause at FAR 52.219-8, Utilization of Small Business Concerns and Small Disadvantaged Business Concerns**, in all subcontracts that offer further subcontracting opportunities, and that the offeror will require subcontractors (except small business concerns) that receive subcontracts in excess of $500,000 ($1,000,000 for construction) to adopt a plan similar to the plan required by the clause at FAR 52.219-9, Small Business and Small Disadvantaged Business Subcontracting Plan.

**Development of Percentage Floors.** Development of separate percentage goals for SB, SDB, WOSB, HUB-Zone Small Business, and SDV concerns that are based on planned subcontracting which are challenging yet realistic. (See FAR 19.705-4(d), DFARS 219.704(a)(1) and 219.705-4.) The percentages listed below represent informational goals considered reasonable and achievable during the basic performance period of the resultant contract. Goals will be re-negotiated prior to exercising any option period(s) should option(s) be a part of the solicitation.

62% of planned subcontracting dollars to be placed with all Small Business (SB) concerns

9% of planned subcontracting dollars to be placed with those small business concerns owned and controlled by socially and economically disadvantaged (SDB) individuals.

5% of planned subcontracting dollars to be placed with women-owned small business (WOSB) concerns.

3% of planned subcontracting dollars with Service-Disabled Veterans (SDV) Small Business concerns.

2% of planned subcontracting dollars with HUBZone Small Business Concerns.

Goals included in any proposed utilization and participation of small business concerns submitted should reflect goals at least equal to those suggested above. If lesser

goals are proposed, firms would be required to explain how the proposed goals and the Plan represent the firm's best efforts to comply with the policy outlined in the solicitation. Proposed demonstration and participation of small business concerns will be reviewed to ensure the plans and the firm's ability to carry out the plans, represent the firm's best efforts to maximize their abilities for subcontracting opportunities with Small Business Concerns.

FACTOR 7: Price

The total cost for the construction will be considered for evaluation, including all options. Proposed price for the construction of this project will be considered for evaluation and assist in establishment of the competitive range (if one is established). Evaluated Total Cost Method (ETCM) shall be used for this procurement.

## 5. RATING SCHEME

**Adjective Ratings.** The following adjective ratings will be used in evaluation of both the major technical factors and the technical sub-factors. Use uppercase letter ratings for major technical factors as well as the overall rating. Use lowercase letter ratings for technical sub-factors.

**(1). Exceptional.** Exceeds requirements of the RFP, provides all required information stated and is expressed in a manner indicating maximum benefit to the government. The submitted technical portion of the proposal has no significant weaknesses.

**(2). Above Average.** Exceeds requirements of the RFP, provides all required information stated and is expressed in a manner indicating significant benefit to the government. The submitted proposal has only minor weaknesses that have no impact on the proposal as a whole and do not require correction.

**(3). Average**. Meets requirements of the RFP as required and indicates benefits to the government. Any weakness noted has only a minor impact on the proposal and is easily correctable.

**(4). Marginal**. Barely meets solicitation requirements of the factor or sub-factor requirements of the evaluation factors set forth. The Government may still receive benefit from the proposal submitted. Any deficiencies noted are correctable without major revision of the proposal.

**(5). Unacceptable**. Fails to meet one or more of the factor or sub-factor requirements the evaluation factors set forth. The Government would not receive benefit from the proposal submitted. The deficiencies noted are uncorrectable without a major revision of the proposal.

For, Past Performance Construction and the past performance subcontractor's portion of, Qualifications of Construction Personnel & Mechanical/Electrical Sub-Contractors, a

neutral rating will be awarded when no past performance records are available. The Federal Acquisition Regulation (FAR) 15.305(a)(2)(iv) states, “In the case of an offeror without a record of relevant past performance or for whom information on past performance is not available, the offeror may not be evaluated either favorably or unfavorably on past performance." Therefore, where a proposer fails to provide past performance information and where it is not available from other sources, past performance shall not be evaluated. The proposal shall be evaluated just as if “past performance” were not an evaluation factor.

**Overall Rating.** Overall proposal ratings shall be assigned with strong consideration given to the most heavily weighted factors.

# SPECIFICATIONS

**FINAL**

## Replace Hydrant Fuel System

MUHJ-01-3000 - DLA FY 2004

HQ DLA/U.S. Air Force Project
Langley AFB, Virginia

*July 2004*

***Prepared for***

U.S. Army Corps of Engineers
Omaha District

***Prepared by***

Argus Consulting, Inc.

The Schemmer Associates

PROJECT TABLE OF CONTENTS

DIVISION 01 - GENERAL REQUIREMENTS

01200 PROJECT MEETINGS
01310 ADMINISTRATIVE REQUIREMENTS
01312 QUALITY CONTROL SYSTEM (QCS)
01320 PROJECT SCHEDULE
01330 SUBMITTAL PROCEDURES
01351A SAFETY, HEALTH, AND EMERGENCY RESPONSE (HTRW/UST)
01355A ENVIRONMENTAL PROTECTION
01356A STORM WATER POLLUTION PREVENTION MEASURES
01420 SOURCES FOR REFERENCE PUBLICATIONS
01450A CHEMICAL DATA QUALITY CONTROL
01451 CONTRACTOR QUALITY CONTROL
01452 SPECIAL INSPECTION FOR SEISMIC-RESISTING SYSTEMS
01452A SPECIAL INSPECTION FOR SEISMIC-RESISTING SYSTEMS
01500 TEMPORARY CONSTRUCTION FACILITIES
01525 SAFETY AND OCCUPATIONAL HEALTH REQUIREMENTS
01572 CONSTRUCTION AND DEMOLITION WASTE MANAGEMENT
01670 RECYCLED / RECOVERED MATERIALS
01730 OPERATION AND MAINTENANCE SUPPORT INFORMATION (OMSI)
01780 CLOSEOUT SUBMITTALS

DIVISION 02 - SITE CONSTRUCTION

02120A TRANSPORTATION AND DISPOSAL OF HAZARDOUS MATERIALS
02220 DEMOLITION
02300A EARTHWORK
02315A EXCAVATION, FILLING AND BACKFILLING FOR BUILDINGS
02316A EXCAVATION, TRENCHING, AND BACKFILLING FOR UTILITIES SYSTEMS
02458A PRESTRESSED CONCRETE PILING
02510A WATER DISTRIBUTION SYSTEM
02531 SANITARY SEWERS
02630A STORM AND CONTAINMENT DRAINAGE SYSTEM
02722A GRADED-CRUSHED AGGREGATE BASE COURSE
02741A HOT-MIX ASPHALT (HMA) FOR ROADS AND AIRFIELDS
02748A BITUMINOUS TACK AND PRIME COATS
02754A CONCRETE PAVEMENTS
02760A FIELD MOLDED SEALANTS FOR SEALING JOINTS IN RIGID PAVEMENTS
02763A PAVEMENT MARKINGS
02821A FENCING
02921A SEEDING

DIVISION 03 - CONCRETE

03100A STRUCTURAL CONCRETE FORMWORK
03150A EXPANSION JOINTS, CONTRACTION JOINTS, AND WATERSTOPS
03200A CONCRETE REINFORCEMENT
03300 CAST-IN-PLACE STRUCTURAL CONCRETE

DIVISION 04 - MASONRY

04200 MASONRY

DIVISION 05 - METALS

05106 ROLLING COVER (CUSTOM FABRICATED)

05120 STRUCTURAL STEEL
05210A STEEL JOISTS
05300A STEEL DECKING
05500A MISCELLANEOUS METAL

DIVISION 06 - WOOD AND PLASTICS

06100A ROUGH CARPENTRY
06410A LAMINATE CLAD ARCHITECTURAL CASEWORK

DIVISION 07 - THERMAL AND MOISTURE PROTECTION

07510A BUILT-UP ROOFING
07600 FLASHING AND SHEET METAL
07840 FIRESTOPPING
07900A JOINT SEALING

DIVISION 08 - DOORS AND WINDOWS

08110 STEEL DOORS AND FRAMES
08331A METAL ROLLING COUNTER DOORS
08510 STEEL WINDOWS
08710 DOOR HARDWARE
08810A GLASS AND GLAZING

DIVISION 09 - FINISHES

09250 GYPSUM BOARD
09510 ACOUSTICAL CEILINGS
09650 RESILIENT FLOORING
09900 PAINTS AND COATINGS
09971 EXTERIOR COATING OF STEEL STRUCTURES
09973 INTERIOR COATING OF WELDED STEEL PETROLEUM FUEL TANKS

DIVISION 10 - SPECIALTIES

10530 PRE-ENGINEERED CANOPY SYSTEMS (BID OPTION)
10800 TOILET ACCESSORIES

DIVISION 13 - SPECIAL CONSTRUCTION

13100A LIGHTNING PROTECTION SYSTEM
13110A CATHODIC PROTECTION SYSTEM (SACRIFICIAL ANODE)
13112A CATHODIC PROTECTION SYSTEM (IMPRESSED CURRENT)
13120A STANDARD METAL BUILDING SYSTEMS
13280A ASBESTOS ABATEMENT
13281A LEAD HAZARD CONTROL ACTIVITIES
13850A FIRE DETECTION AND ALARM SYSTEM, DIRECT CURRENT LOOP
13852A FIRE ALARM REPORTING SYSTEM, RADIO TYPE

DIVISION 14 - CONVEYING SYSTEMS

14602A CRANES, SINGLE-GIRDER BRIDGE, MONORAIL AND JIB

DIVISION 15 - MECHANICAL

15050 MECHANICAL EQUIPMENT, FUELING
15051 PANTOGRAPHS
15060 PIPE, MANUAL VALVES, AND FITTINGS, FUELING SYSTEM

15080A THERMAL INSULATION FOR MECHANICAL SYSTEMS
15101 CONTROL VALVES, FUELING SYSTEM
15140 PUMPS, FUELING SYSTEM
15176 FUEL STORAGE TANK AND COMPONENTS
15177 PETROLEUM TANK CLEANING
15400A PLUMBING, GENERAL PURPOSE
15700A UNITARY HEATING AND COOLING EQUIPMENT
15880 FILTER SEPARATOR, FUELING SYSTEM
15895 AIR SUPPLY, DISTRIBUTION, VENTILATION, AND EXHAUST SYSTEM
15899 SYSTEM START-UP, FUELING SYSTEM
15950A HEATING, VENTILATING AND AIR CONDITIONING (HVAC) CONTROL SYSTEMS
15970 PUMP CONTROL AND ANNUNCIATION SYSTEM
15990A TESTING, ADJUSTING, AND BALANCING OF HVAC SYSTEMS

DIVISION 16 - ELECTRICAL

16070A SEISMIC PROTECTION FOR ELECTRICAL EQUIPMENT
16264A DIESEL-GENERATOR SET, STATIONARY 15-300 KW, STANDBY APPLICATIONS
16375A ELECTRICAL DISTRIBUTION SYSTEM, UNDERGROUND
16415A ELECTRICAL WORK, INTERIOR
16528A EXTERIOR LIGHTING
16710A PREMISES DISTRIBUTION SYSTEM
16711A TELEPHONE SYSTEM, OUTSIDE PLANT

-- End of Project Table of Contents --

SECTION TABLE OF CONTENTS

DIVISION 01 - GENERAL REQUIREMENTS

SECTION 01200

PROJECT MEETINGS

**03/04**

PART 1 GENERAL

1.1 SUBMITTALS (Not Applicable)
1.2 PRECONSTRUCTION CONFERENCE
1.2.1 Scheduling
1.2.2 Purpose
1.2.3 Discussion Items
1.3 OTHER MEETINGS
1.4 FACILITY MEETINGS
1.5 MINUTES OF MEETINGS
1.6 Warranty Management Plan

PART 2 PRODUCTS (This Part Not Used)

PART 3 EXECUTION (This Part Not Used)

-- End of Section Table of Contents --

MASTER SPECIFICATION FOR MILITARY CONSTRUCTION

SECTION 01200
PROJECT MEETINGS

**03/04**

PART 1 GENERAL

1.1 SUBMITTALS (Not Applicable)

1.2 PRECONSTRUCTION CONFERENCE

1.2.1 Scheduling

After award of the construction contract and prior to the start of any construction work, the Contracting Officer (CO) will schedule and conduct a preconstruction conference. The Contractor's Project Manager, Superintendent and Quality Control System Manager shall attend this meeting. The Contractor is encouraged to have an officer of his company (Project Manager could be this person) and representation from each of his sub-contractors at the conference. This conference will be held at a location and time as specified by the CO.

1.2.2 Purpose

The purpose of this preconstruction conference is to enable the CO to outline the procedures that will be followed by the Government in its administration of this construction contract and to discuss the performance that will be expected from the Contractor. This conference will allow the Contractor an opportunity to ask questions about the Government's supervision and inspection of contract work, about security requirements, regulations, etc. The CO may invite Using Service personnel and any other Government personnel to attend this conference.

1.2.3 Discussion Items

The following is a list of items for discussion during the preconstruction conference. However, the Contracting Officer may include additional items for discussion as conditions and the work require.

a. Authority of the Area/Resident Engineer and organization of the Area/Resident office.

b. Contractor's Progress Schedule.

c. Correspondence Procedures.

d. Contractor Labor Standards Provisions.

e. Contract Modifications and Administrative Procedures.

f. Contractor's Administrative, Laydown and Storage Areas.

g. Procedures for Processing Submittals.

h. Payment Estimate Data and Procedures.

i. Contractor Utilities.

j. Security Requirements and Other Regulations, if applicable.

k. Government Furnished Equipment, if applicable.

l. Disposition of Salvage Property.

m. Contractor Insurance Requirements.

n. Value Engineering Program.

o. Contractor Performance Evaluation.

p. As-Built Drawings.

q. Single Point of Contact for Warranty of Construction.

r. Turnover of Completed Facilities.

1.3 OTHER MEETINGS

Other meetings are or may be scheduled to be held after the Preconstruction Conference, and such meetings may include the following:

a. Accident Prevention Safety Plan

b. Quality Control Plan.

c. Environmental Protection Plan.

d. Warranty Management Plan (Post Construction Warranty Conference)

1.4 FACILITY MEETINGS

The Facility may also schedule meetings with the Contractor through the CO during the progress of construction work.

1.5 MINUTES OF MEETINGS

The Government will prepare minutes of the meeting and will provide the Contractor with a signed original for review and concurrence. The minutes shall include all items discussed at the meeting and the Government will make all corrections provided by the Contractor and resubmit the corrected minutes to the Contractor within seven days.

1.6 Warranty Management Plan

The Contractor shall provide a Warranty Management Plan, not less than 30 days prior to the Post-Construction Warranty Conference. As a minimum, include a table, showing the requirements, and attach certificates:

a. List of warranties provided.

b. List of equipment, names of manufacturers and suppliers and phone numbers.

c. Period of warranties and Start Date.

d. List of Extended Warranties.

e. Warranty Certificates.

f. Single Point of Contact for Warranty of Construction.

PART 2 PRODUCTS (This Part Not Used)

PART 3 EXECUTION (This Part Not Used)

-- End of Section --

SECTION TABLE OF CONTENTS

DIVISION 01 - GENERAL REQUIREMENTS

SECTION 01310

ADMINISTRATIVE REQUIREMENTS

**03/04**

PART 1 GENERAL

1.1 SUBMITTALS
1.2 COLOR/FINISH BOARDS
1.2.1 Interior color/finish boards
1.2.2 Exterior color/finish boards
1.2.3 Content
1.2.4 Identification
1.2.5 Approval
1.3 VIEW LOCATION MAP
1.4 PROGRESS AND COMPLETION PICTURES
1.5 Certificates of insurance
1.6 SUPERVISION
1.7 PARTNERING
1.8 AVAILABILITY OF CADD DRAWING FILES
1.9 ELECTRONIC MAIL (E-MAIL) ADDRESS

PART 2 PRODUCTS

PART 3 EXECUTION

-- End of Section Table of Contents --

SECTION 01310

ADMINISTRATIVE REQUIREMENTS
**03/04**

PART 1 GENERAL

1.1 SUBMITTALS

Government approval is required for submittals with a "G" designation; submittals not having a "G" designation are for information only or as otherwise designated. When used, a designation following the "G" designation identifies the office that will review the submittal for the Government. The following shall be submitted in accordance with Section 01330 SUBMITTAL PROCEDURES:

SD-01 Preconstruction Submittals

View location map; G

Progress and completion pictures; G

Certificates of insurance;

SD-04 Samples

COLOR/FINISH BOARDS; G

Physical examples of materials, equipment or workmanship that illustrate functional and aesthetic characteristics of a material or product and establish standards by which the work can be judged.

Color samples from the manufacturer's standard line (or custom color samples if specified) to be used in selecting or approving colors for the project.

1.2 COLOR/FINISH BOARDS

Submit five sets of color boards within 63 calendar days after notice to proceed. The samples shall be presented on 8-1/2 by 11 inch boards (modules) with a maximum spread of 24 by 31 1/2 inches for foldouts. Modules shall be designed to fit in a standard loose-leaf, three-ring binder. Where special finishes such as architectural concrete, carpet, or prefinished textured metal panels are required, samples not less than 12 inches square shall be submitted with the board. If more space is needed, more than one board per set may be submitted. The Contractor shall certify that he has reviewed the color samples in detail and that the color samples are in accordance with contract drawings and specifications, except as may be otherwise explicitly stated. Submittal of color samples shall not relieve the Contractor of the responsibility to submit samples required elsewhere herein. Submittals shall be complete; Sheets containing samples shall consist of heavy, medium gray illustration board (not white or colored) capable of supporting a four inch by eight inch quarry tile without distorting the binder release or causing sheet tear-out due to hole failure. The sample board backing material shall be of sufficient strength to maintain its original configuration after samples have been attached to

it for the duration of the construction.

1.2.1 Interior color/finish boards

Interior color/finish boards shall have attached samples of all interior appearance related construction items the Contractor proposes to furnish, including, but not limited to such items as interior paints; wood finishes; ceramic tile; floor coverings; wall coverings; ceiling tiles; plastic laminates; solid surface materials; signage, etc.

1.2.2 Exterior color/finish boards

Exterior color/finish boards shall have attached samples of all exterior appearance related construction items the Contractor proposes to furnish, including but not limited to such items as brick, mortar, paints, window and door frames, roof, soffits, pre-cast units, gutters, and downspouts, etc.

1.2.3 Content

Color board shall consist of all samples, a finish schedule, floor plan, and interior elevations with each clearly indicating the location of each finish/color. Items other than material sample boards may be folded to 8-1/2" by 11" (i.e., floor plans, finish schedules etc.).

1.2.4 Identification

Identify each sample by use, location, and manufacturer's name. Group according to the location where each used.

1.2.5 Approval

Upon final approval, the Contractor shall prepare and submit to the Contracting Officer one set of the approved and corrected color/finish sample boards.

1.3 VIEW LOCATION MAP

Submit to the Contracting Officer, prior to or with the first digital photograph submittals, a sketch or drawing indicating the required photographic locations. Update as required if the locations are moved.

1.4 PROGRESS AND COMPLETION PICTURES

Provide monthly, and within one month of the completion of work, digital photographs, 1600x1200x24 bit true color minimum resolution in JPEG file format showing the sequence and progress of work. Take digital photographs prior to the seventh day of each month from a minimum of ten views from points located by the Contracting Officer. Submit a sketch or drawing indicating points of view. Submit with the monthly invoice two sets of digital photographs each set on a separate CD-R, cumulative of all photos to date. Provide 3-ring binders, include labeled color thumbnail sheets of the photos on each CD-R and labeled plastic CD holders. Cross reference submittals in the appropriate daily report.

1.5 Certificates of insurance

Procure and maintain during the entire period of performance under this contract the following minimum insurance coverage:

a. Comprehensive general liability: $500,000 per occurrence

b. Automobile liability: $200,000 per person, $500,000 per occurrence for bodily injury, $20,000 per occurrence for property damage

c. Workmen's compensation as required by Federal and State workers' compensation and occupational disease laws.

d. Employer's liability coverage of $100,000, except in States where workers compensation may not be written by private carriers,

e. Others as required by Virginia.

## 1.6 SUPERVISION

Contractor shall have at least one qualified supervisor capable of reading, writing, and conversing fluently in the English language on the job site during working hours. In addition, if a Quality Control (QC) representative is required on the contract, then that individual shall also have fluent English communication skills.

## 1.7 PARTNERING

LEVEL A PARTNERING: To most effectively accomplish this contract, the Government requires the formation of a cohesive partnership with the contractor and its subcontractors. In addition, other key personnel, including the client who will occupy the facility, the designer-of-record, principal individuals from the Government, the project sponsor, and the representative(s) of the facility owner will also be invited to participate in the partnering process. The partnering relationship is based upon trust, dedication to common goals, an understanding of each other's expectations and values, and a commitment to success. The goals of the partnering process are improved communication, efficiency and cost effectiveness, increased opportunity for innovation, and the continuous improvement of product quality. The partnership will strive to draw on the strength of each organization in an effort to achieve a quality project done right the first time, within budget, on schedule, and without any safety mishaps, thereby providing the opportunity for the contractor to make a reasonable profit.

Anticipate that the initial session will be one-day minimum and the follow-on sessions, held at a minimum of once every three months or as agreed to by the partners, will be half-day minimum. The initial partnering session shall be held away from the project site at a location acceptable to the contractor and to the Government; the follow-on sessions can be held at locations agreed to by the partners. Key members of the prime and subcontractors teams, including senior management, must participate. For a Level A partnering session, the contractor is responsible for providing an experienced professional facilitator to conduct the meeting. The contractor shall pay all costs associated with the partnering effort, including facilitator, meeting room, audio-visual equipment, refreshments, and working meals. All participants are responsible for the costs of their own meals, lodging, and transportation required in order to attend the partnering session.

LEVEL B PARTNERING: To most effectively accomplish this contract, the Government requires the formation of a cohesive partnership with the

contractor and its subcontractors. In addition, other key personnel, including the client who will occupy the facility, the designer-of-record, principal individuals from the Government, the project sponsor, and the representative(s) of the facility owner will also be invited to participate in the partnering process. The partnering relationship is based upon trust, dedication to common goals, an understanding of each other's expectations and values, and a commitment to success. The goals of the partnering process are improved communication, efficiency and cost effectiveness, increased opportunity for innovation, and the continuous improvement of product quality. The partnership will strive to draw on the strength of each organization in an effort to achieve a quality project done right the first time, within budget, on schedule, and without any safety mishaps, thereby providing the opportunity for the contractor to make a reasonable profit.

Anticipate that the initial session will be one-day and the follow-on session(s), held at a minimum of once every three months or as agreed to by the partners, will be half-day. The initial partnering session shall be held away from the project site location; the follow-on session(s) can be held at locations agreed to by the partners. Key members of the prime and subcontractors teams, including senior management, must participate. Level B partnering sessions are facilitated by in-house facilitators (a trained facilitator from an EFD/A, another ROICC office, another Government agency, or from a contractor association). The contractor shall pay all costs associated with the partnering effort, including facilitator, meeting room, audio-visual equipment, refreshments, and working meals. All participants are responsible for the costs for their own meals, lodging, and transportation required in order to attend the partnering session.

LEVEL C PARTNERING: To most effectively accomplish this contract, the Government requires the formation of a cohesive partnership with the contractor and its subcontractors. The partnering relationship is based upon trust, dedication to common goals, an understanding of each other's expectations and values, and a commitment to success. The goals of the partnering process are improved communication, efficiency and cost effectiveness, increased opportunity for innovation, and the continuous improvement of product quality. The partnership will strive to draw on the strength of each organization in an effort to achieve a quality project done right the first time, within budget, on schedule, and without any safety mishaps, thereby providing the opportunity for the contractor to make a reasonable profit. This level of partnering is an introduction to partnering concepts and benefits and should become a part of the preconstruction conference. The senior ROICC and contractor persons present will jointly host the initial session. The partners will determine the frequency of the follow-on sessions. Partnering sessions should be held at or near the location of the ROICC office.

## 1.8 AVAILABILITY OF CADD DRAWING FILES

After award and upon request, the electronic "Computer-Aided Drafting and Design (CADD)" drawing files will be made available to the Contractor for use in preparation of construction drawings and data related to the referenced contract subject to the following terms and conditions.

Data contained on these electronic files shall not be used for any purpose other than as a convenience in the preparation of construction drawings and data for the referenced project. Any other use or reuse shall be at the sole risk of the Contractor and without liability or legal exposure to the Government. The Contractor shall make no claim and waives to the fullest

extent permitted by law, any claim or cause of action of any nature against the Government, its agents or sub consultants that may arise out of or in connection with the use of these electronic files. The Contractor shall, to the fullest extent permitted by law, indemnify and hold the Government harmless against all damages, liabilities or costs, including reasonable attorney's fees and defense costs, arising out of or resulting from the use of these electronic files.

These electronic CADD drawing files are not construction documents. Differences may exist between the CADD files and the corresponding construction documents. The Government makes no representation regarding the accuracy or completeness of the electronic CADD files, nor does it make representation to the compatibility of these files with the Contractors hardware or software. In the event that a conflict arises between the signed and sealed construction documents prepared by the Government and the furnished CADD files, the signed and sealed construction documents shall govern. The Contractor is responsible for determining if any conflict exists. Use of these CADD files does not relieve the Contractor of duty to fully comply with the contract documents, including and without limitation, the need to check, confirm and coordinate the work of all contractors for the project.

If the Contractor uses, duplicates and/or modifies these electronic CADD files for use in producing construction drawings and data related to this contract, all previous indicia of ownership (seals, logos, signatures, initials and dates) shall be removed.

## 1.9 ELECTRONIC MAIL (E-MAIL) ADDRESS

The Contractor shall establish and maintain electronic mail (e-mail) capability along with the capability to open various electronic attachments in Microsoft, Adobe Acrobat, and other similar formats. Within 10 days after contract award, the Contractor shall provide the Contracting Officer a single (only one) e-mail address for electronic communications from the Contracting Officer related to this contract including, but not limited to contract documents, invoice information, request for proposals, and other correspondence. The Contracting Officer may also use email to notify the Contractor of base access conditions when emergency conditions warrant, such as hurricanes, terrorist threats, etc. Multiple email address will not allowed.

It is the Contractor's responsibility to make timely distribution of all Contracting Officer initiated e-mail with its own organization including field office(s). The Contractor shall promptly notify the Contracting Officer, in writing, of any changes to this email address.

# PART 2 PRODUCTS

Not used.

# PART 3 EXECUTION

Not used.

-- End of Section --

SECTION TABLE OF CONTENTS

DIVISION 01 - GENERAL REQUIREMENTS

SECTION 01312

QUALITY CONTROL SYSTEM (QCS)

**03/04**

PART 1 GENERAL

1.1 Electronic Communications
1.2 Other Factors
1.3 QCS SOFTWARE
1.4 SYSTEM REQUIREMENTS
1.5 RELATED INFORMATION
1.5.1 QCS User Guide
1.6 CONTRACT DATABASE
1.7 DATABASE MAINTENANCE
1.7.1 Administration
1.7.1.1 Contractor Information
1.7.1.2 Subcontractor Information
1.7.1.3 Correspondence
1.7.1.4 Equipment
1.7.1.5 Management Reporting
1.7.2 Finances
1.7.2.1 Pay Activity Data
1.7.2.2 Payment Requests
1.7.3 Quality Control (QC)
1.7.3.1 Daily Contractor Quality Control (CQC) Reports.
1.7.3.2 Deficiency Tracking.
1.7.3.3 Three-Phase Control Meetings
1.7.3.4 Accident/Safety Tracking.
1.7.3.5 Features of Work
1.7.3.6 QC Requirements
1.7.4 Submittal Management
1.7.5 Schedule
1.7.6 Import/Export of Data
1.8 IMPLEMENTATION
1.9 DATA SUBMISSION VIA COMPUTER DISKETTE OR CD-ROM
1.9.1 File Medium
1.9.2 Disk or CD-ROM Labels
1.9.3 File Names
1.10 MONTHLY COORDINATION MEETING
1.11 NOTIFICATION OF NONCOMPLIANCE

-- End of Section Table of Contents --

SECTION 01312

QUALITY CONTROL SYSTEM (QCS)
**03/04**

PART 1 GENERAL

The Government will use the Resident Management System for Windows (RMS) to assist in its monitoring and administration of this contract. The Contractor shall use the Government-furnished Construction Contractor Module of RMS, referred to as QCS, to record, maintain, and submit various information throughout the contract period. The Contractor module, user manuals, updates, and training information can be downloaded from the RMS web site.This joint Government-Contractor use of RMS and QCS will facilitate electronic exchange of information and overall management of the contract. QCS provides the means for the Contractor to input, track, and electronically share information with the Government in the following areas:

Administration
Finances
Quality Control
Submittal Monitoring
Scheduling
Import/Export of Data

1.1 Electronic Communications

For ease and speed of communications, both Government and Contractor will, to the maximum extent feasible, exchange documentation in electronic format. Pay requests and other documents comprising the official contract record shall also be provided in paper format, with signatures and dates where necessary. Paper documents will govern, in the event of discrepancy with the electronic version.

1.2 Other Factors

Particular attention is directed to Contract Clause, "Schedules for Construction Contracts", Contract Clause, "Payments", Section 01320, PROJECT SCHEDULE, Section 01330, SUBMITTAL PROCEDURES, and Section 01451, CONTRACTOR QUALITY CONTROL, which have a direct relationship to the reporting to be accomplished through QCS. Also, there is no separate payment for establishing and maintaining the QCS database; all costs associated therewith shall be included in the contract pricing for the work.

1.3 QCS SOFTWARE

QCS is a Windows-based program that can be run on a stand-alone personal computer or on a network. The Government will make available the QCS software to the Contractor after award of the construction contract. Prior to the Pre-Construction Conference, the Contractor shall be responsible to download, install and use the latest version of the QCS software from the Government's RMS Internet Website. Upon specific justification and request by the Contractor, the Government can provide QCS on CD-ROM. Any program updates of QCS will be made available to the Contractor via the Government RMS Website as they become available.

## 1.4 SYSTEM REQUIREMENTS

The following listed hardware and software is the minimum system configuration that the Contractor shall have to run QCS:

**Hardware**

IBM-compatible PC with 500 MHz Pentium or higher processor

128+ MB RAM for workstation / 256+ MB RAM for server

1 GB hard drive disk space for sole use by the QCS system

3 1/2 inch high-density floppy drive

Compact disk (CD) Reader, 8x speed or higher

SVGA or higher resolution monitor (1024 x 768, 256 colors)

Mouse or other pointing devise

Windows compatible printer (Laser printer must have 4+ MB of RAM)

Connection to the Internet, minimum 56 BPS

**Software**

MS Windows 98, ME, NT, or 2000

Word Processing software compatible with MS Word 97 or newer

Latest version of : Netscape Navigator, Microsoft Internet Explorer, or other browser that supports HTML 4.0 or higher

Electronic mail (E-mail), MAPI compatible

Virus protection software that is regularly upgraded with all issued manufacturer's updates

## 1.5 RELATED INFORMATION

### 1.5.1 QCS User Guide

After contract award, the Contractor shall download instructions for the installation and use of QCS from the Government RMS Internet Website; the Contractor can obtain the current address from the Government. In case of justifiable difficulties, the Government will provide the Contractor with a CD-ROM containing these instructions.

## 1.6 CONTRACT DATABASE

Prior to the pre-construction conference, the Government shall provide the Contractor with basic contract award data to use for QCS. The Government will provide data updates to the Contractor as needed, generally by files attached to E-mail. These updates will generally consist of submittal reviews, correspondence status, QA comments, and other administrative and QA data.

## 1.7 DATABASE MAINTENANCE

The Contractor shall establish, maintain, and update data for the contract in the QCS database throughout the duration of the contract. The Contractor shall establish and maintain the QCS database at the Contractor's site office. Data updates to the Government shall be submitted by E-mail with file attachments, e.g., daily reports, schedule updates, payment requests. If permitted by the Contracting Officer, a data diskette or CD-ROM may be used instead of E-mail (see Paragraph DATA SUBMISSION VIA COMPUTER DISKETTE OR CD-ROM). The QCS database typically shall include current data on the following items:

### 1.7.1 Administration

#### 1.7.1.1 Contractor Information

The database shall contain the Contractor's name, address, telephone numbers, management staff, and other required items. Within 14 calendar days of receipt of QCS software from the Government, the Contractor shall deliver Contractor administrative data in electronic format via E-mail.

#### 1.7.1.2 Subcontractor Information

The database shall contain the name, trade, address, phone numbers, and other required information for all subcontractors. A subcontractor must be listed separately for each trade to be performed. Each subcontractor/trade shall be assigned a unique Responsibility Code, provided in QCS. Within 14 calendar days of receipt of QCS software from the Government, the Contractor shall deliver subcontractor administrative data in electronic format via E-mail.

#### 1.7.1.3 Correspondence

All Contractor correspondence to the Government shall be identified with a serial number. Correspondence initiated by the Contractor's site office shall be prefixed with "S". Letters initiated by the Contractor's home (main) office shall be prefixed with "H". Letters shall be numbered starting from 0001. (e.g., H-0001 or S-0001). The Government's letters to the Contractor will be prefixed with "C".

#### 1.7.1.4 Equipment

The Contractor's QCS database shall contain a current list of equipment planned for use or being used on the jobsite, including the most recent and planned equipment inspection dates.

#### 1.7.1.5 Management Reporting

QCS includes a number of reports that Contractor management can use to track the status of the project. The value of these reports is reflective of the quality of the data input, and is maintained in the various sections of QCS. Among these reports are: Progress Payment Request worksheet, QA/QC comments, Submittal Register Status, Three-Phase Inspection checklists.

### 1.7.2 Finances

#### 1.7.2.1 Pay Activity Data

The QCS database shall include a list of pay activities that the Contractor

shall develop in conjunction with the construction schedule. The sum of all pay activities shall be equal to the total contract amount, including modifications. Pay activities shall be grouped by Contract Line Item Number (CLIN), and the sum of the activities shall equal the amount of each CLIN. The total of all CLINs equals the Contract Amount.

1.7.2.2 Payment Requests

All progress payment requests shall be prepared using QCS. The Contractor shall complete the payment request worksheet and include it with the payment request. The work completed under the contract, measured as percent or as specific quantities, shall be updated at least monthly. After the update, the Contractor shall generate a payment request report using QCS. The Contractor shall submit the payment requests with supporting data by E-mail with file attachment(s). If permitted by the Contracting Officer, a data diskette may be used instead of E-mail. A signed paper copy of the approved payment request is also required, which shall govern in the event of discrepancy with the electronic version.

1.7.3 Quality Control (QC)

QCS provides a means to track implementation of the 3-phase QC Control System, prepare daily reports, identify and track deficiencies, document progress of work, and support other contractor QC requirements. The Contractor shall maintain this data on a daily basis. Entered data will automatically output to the QCS generated daily report. The Contractor shall provide the Government a Contractor Quality Control (CQC) Plan within the time required in Section 01451, CONTRACTOR QUALITY CONTROL. Within seven calendar days of Government acceptance, the Contractor shall submit a data diskette or CD-ROM reflecting the information contained in the accepted CQC Plan: schedule, pay activities, features of work, submittal register, QC requirements, and equipment list.

1.7.3.1 Daily Contractor Quality Control (CQC) Reports.

QCS includes the means to produce the Daily CQC Report. The Contractor may use other formats to record basic QC data. However, the Daily CQC Report generated by QCS shall be the Contractor's official report. Data from any supplemental reports by the Contractor shall be summarized and consolidated onto the QCS-generated Daily CQC Report. Daily CQC Reports shall be submitted as required by Section 01451, CONTRACTOR QUALITY CONTROL. Reports shall be submitted electronically to the Government using E-mail or diskette within 24 hours after the date covered by the report. Use of either mode of submittal shall be coordinated with the Government representative. The Contractor shall also provide the Government a signed, printed copy of the daily CQC report.

1.7.3.2 Deficiency Tracking.

The Contractor shall use QCS to track deficiencies. Deficiencies identified by the Contractor will be numerically tracked using QC punch list items. The Contractor shall maintain a current log of its QC punch list items in the QCS database. The Government will log the deficiencies it has identified using its QA punch list items. The Government's QA punch list items will be included in its export file to the Contractor. The Contractor shall regularly update the correction status of both QC and QA punch list items.

1.7.3.3 Three-Phase Control Meetings

The Contractor shall maintain scheduled and actual dates and times of preparatory and initial control meetings in QCS.

1.7.3.4 Accident/Safety Tracking.

The Government will issue safety comments, directions, or guidance whenever safety deficiencies are observed. The Government's safety comments will be included in its export file to the Contractor. The Contractor shall regularly update the correction status of the safety comments. In addition, the Contractor shall utilize QCS to advise the Government of any accidents occurring on the jobsite. This brief supplemental entry is not to be considered as a substitute for completion of mandatory reports, e.g., ENG Form 3394 and OSHA Form 200.

1.7.3.5 Features of Work

The Contractor shall include a complete list of the features of work in the QCS database. A feature of work may be associated with multiple pay activities. However, each pay activity (see subparagraph "Pay Activity Data" of paragraph "Finances") will only be linked to a single feature of work.

1.7.3.6 QC Requirements

The Contractor shall develop and maintain a complete list of QC testing, transferred and installed property, and user training requirements in QCS. The Contractor shall update all data on these QC requirements as work progresses, and shall promptly provide this information to the Government via QCS.

1.7.4 Submittal Management

The Government will provide the initial submittal register, ENG Form 4288, SUBMITTAL REGISTER, in electronic format. Thereafter, the Contractor shall maintain a complete list of all submittals, including completion of all data columns. Dates on which submittals are received and returned by the Government will be included in its export file to the Contractor. The Contractor shall use QCS to track and transmit all submittals. ENG Form 4025, submittal transmittal form, and the submittal register update, ENG Form 4288, shall be produced using QCS. RMS will be used to update, store and exchange submittal registers and transmittals, but will not be used for storage of actual submittals.

1.7.5 Schedule

The Contractor shall develop a construction schedule consisting of pay activities, in accordance with Contract Clause "Schedules for Construction Contracts", or Section 01320, PROJECT SCHEDULE, as applicable. This schedule shall be input and maintained in the QCS database either manually or by using the Standard Data Exchange Format (SDEF) (see Section 01320 PROJECT SCHEDULE). The updated schedule data shall be included with each pay request submitted by the Contractor.

1.7.6 Import/Export of Data

QCS includes the ability to export Contractor data to the Government and to import submittal register and other Government-provided data, and schedule

data using SDEF.

## 1.8 IMPLEMENTATION

Contractor use of QCS as described in the preceding paragraphs is mandatory. The Contractor shall ensure that sufficient resources are available to maintain its QCS database, and to provide the Government with regular database updates. QCS shall be an integral part of the Contractor's management of quality control.

## 1.9 DATA SUBMISSION VIA COMPUTER DISKETTE OR CD-ROM

The Government-preferred method for Contractor's submission of updates, payment requests, correspondence and other data is by E-mail with file attachment(s). For locations where this is not feasible, the Contracting Officer may permit use of computer diskettes or CD-ROM for data transfer. Data on the disks or CDs shall be exported using the QCS built-in export function. If used, diskettes and CD-ROMs will be submitted in accordance with the following:

### 1.9.1 File Medium

The Contractor shall submit required data on 3-1/2 inch double-sided high-density diskettes formatted to hold 1.44 MB of data, capable of running under Microsoft Windows 95 or newer. Alternatively, CD-ROMs may be used. They shall conform to industry standards used in the United States. All data shall be provided in English.

### 1.9.2 Disk or CD-ROM Labels

The Contractor shall affix a permanent exterior label to each diskette and CD-ROM submitted. The label shall indicate in English, the QCS file name, full contract number, contract name, project location, data date, name and telephone number of person responsible for the data.

### 1.9.3 File Names

The Government will provide the file names to be used by the Contractor with the QCS software.

## 1.10 MONTHLY COORDINATION MEETING

The Contractor shall update the QCS database each workday. At least monthly, the Contractor shall generate and submit an export file to the Government with schedule update and progress payment request. As required in Contract Clause "Payments", at least one week prior to submittal, the Contractor shall meet with the Government representative to review the planned progress payment data submission for errors and omissions. The Contractor shall make all required corrections prior to Government acceptance of the export file and progress payment request. Payment requests accompanied by incomplete or incorrect data submittals will be returned. The Government will not process progress payments until an acceptable QCS export file is received.

## 1.11 NOTIFICATION OF NONCOMPLIANCE

The Contracting Officer will notify the Contractor of any detected noncompliance with the requirements of this specification. The Contractor shall take immediate corrective action after receipt of such notice. Such

notice, when delivered to the Contractor at the work site, shall be deemed sufficient for the purpose of notification.

-- End of Section --

SECTION TABLE OF CONTENTS

DIVISION 01 - GENERAL REQUIREMENTS

SECTION 01320

PROJECT SCHEDULE

**03/04**

PART 1 GENERAL

1.1 REFERENCES
1.2 SUBMITTALS
1.3 GENERAL REQUIREMENTS

PART 2 PRODUCTS (Not Applicable)

PART 3 EXECUTION

3.1 QUALIFICATIONS- CONTRACTOR SCHEDULING REPRESENTATIVE
3.2 BASIS FOR PAYMENT
3.3 PROJECT SCHEDULE
3.3.1 Use of the Critical Path Method
3.3.2 Level of Detail Required
3.3.2.1 Cost and Resource Loading
3.3.2.2 Activity Durations
3.3.2.3 Procurement Activities
3.3.2.4 Critical Activities
3.3.2.5 Government Activities
3.3.2.5.# Work activites to be included on the critical path
3.3.2.6 Responsibility
3.3.2.7 Work Areas
3.3.2.8 Modification or Claim Number
3.3.2.9 Bid Item
3.3.2.10 Phase of Work
3.3.2.11 Category of Work
3.3.2.12 Feature of Work
3.3.3 Scheduled Project Completion
3.3.3.1 Project Start Date
3.3.3.2 Constraint of Last Activity
3.3.3.3 Early Project Completion
3.3.4 Interim Completion Dates
3.3.4.1 Start Phase
3.3.4.2 End Phase
3.3.4.3 Phase X
3.3.5 Default Progress Data Disallowed
3.3.6 Out-of-Sequence Progress
3.3.7 Negative Lags
3.4 PROJECT SCHEDULE SUBMISSIONS
3.4.1 Preliminary NAS Project Schedule Submission
3.4.2 Initial NAS Project Schedule Submission
3.4.3 Monthly Network Analysis Updates (Entire NAS Project Schedule)
3.4.4 Review and Evaluation
3.4.4.1 Acceptance

3.4.4.2 Baseline Network Analysis Schedule
3.4.5 Standard Activity Coding Dictionary
3.5 SUBMISSION REQUIREMENTS
3.5.1 Data Disks
3.5.1.1 File Medium
3.5.1.2 Disk Label
3.5.1.3 File Name
3.5.2 Narrative Report
3.5.3 Approved Changes Verification
3.5.4 Schedule Reports
3.5.4.1 Milestone Report
3.5.4.2 Activity Report
3.5.4.3 Logic Report
3.5.4.4 Total Float Report
3.5.4.5 Earnings Report
3.5.5 Network Diagram
3.5.5.1 Continuous Flow
3.5.5.2 Project Milestone Dates
3.5.5.3 Critical Path
3.5.5.4 Banding
3.5.5.5 Earning (S-Curves)
3.6 PERIODIC PROGRESS MEETINGS
3.6.1 Meeting Attendance
3.6.2 Update Submission Following Progress Meeting
3.6.3 Progress Meeting Contents
3.6.3.1 Start and Finish Dates
3.6.3.2 Time Completion
3.6.3.3 Cost Completion
3.6.3.4 Logic Changes
3.6.3.5 Other Changes
3.7 REQUESTS FOR TIME EXTENSIONS
3.7.1 Justification of Delay
3.7.2 Submission Requirements for Time Extension Requests
3.7.3 Contractor falls behind the approved project schedule
3.7.4 Additional Submission Requirements
3.8 DIRECTED CHANGES
3.9 OWNERSHIP OF FLOAT

-- End of Section Table of Contents --

SECTION 01320

PROJECT SCHEDULE
**03/04**

PART 1 GENERAL

1.1 REFERENCES

The publications listed below form a part of the specification to the extent referenced. The publications are referenced in the text by basic designation only.

U.S. ARMY CORPS OF ENGINEERS (USACE)

ER 1-1-11 (1995) Progress, Schedules, and Network Analysis Systems

1.2 SUBMITTALS

Government approval is required for submittals with a "G" designation; submittals not having a "G" designation are for information only or as otherwise designated. When used, a designation following the "G" designation identifies the office that will review the submittal for the Government. The following shall be submitted in accordance with Section 01330 SUBMITTAL PROCEDURES:

SD-01 Preconstruction Submittals

Qualifications; G

Standard Activity Coding Dictionary;

SD-02 Shop Drawings

Preliminary NAS Project Schedule; G

Initial NAS Project Schedule; G

Baseline Network Analysis Schedule; G

Monthly Network Analysis Updates; G

1.3 GENERAL REQUIREMENTS

Pursuant to the Contract Clause, SCHEDULE FOR CONSTRUCTION CONTRACTS, a Project Schedule as described below shall be prepared. The NAS Project Schedule shall be a composite schedule . The scheduling of construction shall be the responsibility of the Contractor. Contractor management personnel shall actively participate in its development. Subcontractors and suppliers working on the project shall also contribute in developing and maintaining an accurate Project Schedule. The approved Project Schedule shall be used to measure the progress of the work, to aid in evaluating time extensions, and to provide the basis of all progress payments. The Government will use the NAS Project Schedule to evaluate the

contractor's progress for timely completion, plan for Quality Assurance verification of the work and evaluate the effects of a proposed modification on the contract duration (critical path activities)

PART 2 PRODUCTS (Not Applicable)

PART 3 EXECUTION

3.1 QUALIFICATIONS- CONTRACTOR SCHEDULING REPRESENTATIVE

The Contractor shall designate, a scheduling representative, the individual tasked with the responsibility for preparation-updating-revision of the NAS schedule who shall be responsible for the preparation and submittal of the entire NAS project schedule including all items specified below and revisions to the schedule or supplemental completion schedules, as applicable or directed by the Contracting Officer. The scheduling representative shall be approved by the Contracting Officer based on a resume indicating as a minimum, formal training from software vendor or 5 years experience in working with NAS schedules.

3.2 BASIS FOR PAYMENT

The schedule shall be the basis for measuring Contractor progress. Lack of an approved schedule or scheduling personnel will result in an inability of the Contracting Officer to evaluate Contractor's progress for the purposes of payment. Failure of the Contractor to provide all information, as specified below, shall result in the disapproval of the entire Project Schedule submission and the inability of the Contracting Officer to evaluate Contractor progress for payment purposes. In the case where Project Schedule revisions have been directed by the Contracting Officer and those revisions have not been included in the Project Schedule, the Contracting Officer may hold retainage up to the maximum allowed by contract, each payment period, until revisions to the Project Schedule have been made.

3.3 PROJECT SCHEDULE

The contractor shall prepare the NAS schedule using a computer software system. The system utilized by the Contractor shall be capable of satisfying all requirements of this specification and ER 1-1-11. Manual methods used to produce any required information shall require prior approval by the Contracting Officer. The Contracting Officer intends to use PRIMAVERA P3. Should the contractor utilize software that is different than that utilized by the Contracting Officer, based on the software utilized by the contractor for the preparation of the NAS schedule, the contractor shall provide a copy of the software and a license to the Administrative Contracting Officer at the Government field office. The Contractor shall submit a copy of the user's manual outlining the selected CPM computer program's mathematical analysis capabilities, details, functions and operation. The Contractor shall provide to the Government a complete input listing for the selected software.

3.3.1 Use of the Critical Path Method

The Critical Path Method (CPM) of network calculation shall be used to generate the Project Schedule. The Contractor shall provide the Project Schedule in the Precedence Diagram Method (PDM).

3.3.2 Level of Detail Required

The Project Schedule shall include an appropriate level of detail. Failure to develop or update the Project Schedule or provide data to the Contracting Officer at the appropriate level of detail, as specified by the Contracting Officer, shall result in the disapproval of the schedule. The Contracting Officer will use, but is not limited to, the following conditions to determine the appropriate level of detail to be used in the Project Schedule:

3.3.2.1 Cost and Resource Loading

a. Cost Loading Activities: Equipment costs will be assigned to their respective Procurement Activities (i.e., the delivery milestone activity). Costs for installation of the material/equipment (labor, construction equipment, and temporary materials) will be assigned to their respective Construction Activities. The value of inspection/testing activities will not be less than 10 percent of the total costs for Procurement and Construction Activities. Evenly disperse overhead and profit to each activity over the duration of the project. The total of all cost loaded activities; including costs for material and equipment delivered for installation on the project, and labor and construction equipment loaded construction activities, shall total to 100 percent of the value of the contract.

b. Quantities and Units of Measure: Each cost loaded activity will have a detailed breakdown of the contract price, giving quantities for each of the various kinds of work, unit prices, etc.

3.3.2.2 Activity Durations

Contractor submissions shall follow the direction of the Contracting Officer regarding reasonable activity durations. Reasonable durations are those that allow the progress of activities to be accurately determined between payment periods (usually less than 2 percent of all non-procurement activities' Original Durations are greater than 20 days). Durations shall be in work days.

3.3.2.3 Procurement Activities

Tasks related to the procurement of long lead materials or equipment shall be included as separate activities in the project schedule. Long lead materials and equipment are those materials that have a procurement cycle of over 90 days. Examples of procurement process activities include, but are not limited to: submittals, approvals, procurement, fabrication, and delivery.

3.3.2.4 Critical Activities

The following activities shall be listed as separate line activities on the Contractor's project schedule:

a. Submission and approval of mechanical/electrical layout drawings.

b. Submission and approval of O & M manuals.

c. Submission and approval of as-built drawings.

d. Submission and approval of 1354 data and installed equipment lists.

e. Submission and approval of testing and air balance (TAB).

f. Submission of TAB specialist design review report.

g. Submission and approval of fire protection specialist.

h. Submission and approval of testing and balancing of HVAC plus commissioning plans and data.

i. Air and water balance dates.

j. HVAC commissioning dates.

k. Controls testing plan.

l. Controls testing.

m. Performance Verification testing.

n. Other systems testing, if required.

o. Prefinal inspection.

p. Correction of punchlist from prefinal inspection.

q. Final inspection.

3.3.2.5 Government Activities

Government and other agency activities that could impact progress shall be included in the schedule. These activities include, but are not limited to: Government approvals, inspections, utility tie-in, Government Furnished Equipment (GFE) and Notice to Proceed (NTP) for phasing requirements, environmental permit approvals by State regulators, inspections, Government approval of shop drawings activities should be shown with the duration at least the minimum allowed by the contract. The contractor's failure to provide reasonable durations in its schedule for Government activities does not establish or change the Government's review or approval path periods and the durations established for Government's activities are subject to approval by the Contracting Officer.

3.3.2.5.# Work activites to be included on the critical path

CQC (all) mechanical systems test (indicate the specific system)

CQC (all) electrical system tests (indicate the specific system)

Government QA (all) mechanical system acceptance/operational test (indicate specific system)

Government QA (all) electrical system acceptance /operational test (indicate specific system)

CQC completion inspection of the entire project

Contractor works off CQC punchlist

Prefinal inspection performed when the facility is completed such that it can be used for it intended function (as determined by the Contracting Officer)

Contractor works off prefinal punchlist

Final/acceptance inspection of the entire project

Contractor works off final punchlist.

Contractor shall allow 30 calendar days total duration prior to current contract completion date for the above stated activities. (See specification section 01451 Contractor Quality Control).

3.3.2.6 Responsibility

All activities shall be identified in the project schedule by the party responsible to perform the work. Responsibility includes, but is not limited to, the subcontracting firm, contractor work force, or government agency performing a given task. Activities shall not belong to more than one responsible party. The responsible party for each activity shall be identified by the Responsibility Code.

3.3.2.7 Work Areas

All activities shall be identified in the project schedule by the work area in which the activity occurs. Activities shall not be allowed to cover more than one work area. The work area of each activity shall be identified by the Work Area Code.

3.3.2.8 Modification or Claim Number

Any activity that is added or changed by contract modification or used to justify claimed time shall be identified by a mod or claim code that changed the activity. Activities shall not belong to more than one modification or claim item. The modification or claim number of each activity shall be identified by the Mod or Claim Number. Whenever possible, changes shall be added to the schedule by adding new activities. Existing activities shall not normally be changed to reflect modifications.

3.3.2.9 Bid Item

All activities shall be identified in the project schedule by the Bid Item to which the activity belongs. An activity shall not contain work in more than one bid item. The bid item for each appropriate activity shall be identified by the Bid Item Code.

3.3.2.10 Phase of Work

All activities shall be identified in the project schedule by the phases of work in which the activity occurs. Activities shall not contain work in more than one phase of work. The project phase of each activity shall be by the unique Phase of Work Code.

3.3.2.11 Category of Work

All Activities shall be identified in the project schedule according to the category of work which best describes the activity. Category of work

refers, but is not limited, to the procurement chain of activities including such items as submittals approvals, procurement, fabrication, delivery, installation, start-up, and testing. The category of work for each activity shall be identified by the Category of Work Code.

3.3.2.12 Feature of Work

All activities shall be identified in the project schedule according to the feature of work to which the activity belongs. Feature of work refers, but is not limited to, a work breakdown structure for the project. The feature of work for each activity shall be identified by the Feature of Work Code.

3.3.3 Scheduled Project Completion

The schedule duration shall extend from NTP to the official contract completion date as awarded (unless approved by Contracting Officer-for early completion).

3.3.3.1 Project Start Date

The schedule shall start no earlier than the date on which the NTP was acknowledged. The Contractor shall include as the first activity in the project schedule an activity called "Start Project". The "Start Project" activity shall have an "ES" constraint date equal to the date that the NTP was acknowledged, and a zero day duration.

3.3.3.2 Constraint of Last Activity

Completion of the last activity in the schedule shall be constrained by the contract completion date. Calculation on project updates shall be such that if the early finish of the last activity falls after the contract completion date, then the float calculation shall reflect a negative float on the critical path. The Contractor shall include as the last activity in the project schedule an activity called "End Project". The "End Project" activity shall have an "LF" constraint date equal to the completion date for the project, and a zero day duration.

3.3.3.3 Early Project Completion

In the event the project schedule shows completion of the project prior to the contract completion date, the Contractor shall identify those activities that have been accelerated and/or those activities that are scheduled in parallel to support the Contractor's "early" completion. Contractor shall specifically address each of the activities noted in the narrative report at every project schedule update period to assist the Contracting Officer in evaluating the Contractor's ability to actually complete prior to the contract period. The Contractor shall include an activity named "contingency" with no cost and a duration equal to the number of calendar days from the date all the contract work is planned to be completed, to the official contract completion date as awarded.

3.3.4 Interim Completion Dates

Contractually specified interim completion dates shall also be constrained to show negative float if the early finish date of the last activity in that phase falls after the interim completion date.

3.3.4.1 Start Phase

The Contractor shall include as the first activity for a project phase an activity called "Start Phase X" where "X" refers to the phase of work. The "Start Phase X" activity shall have an "ES" constraint date equal to the date on which the NTP was acknowledged, and a zero day duration.

3.3.4.2 End Phase

The Contractor shall include as the last activity in a project phase an activity called "End Phase X" where "X" refers to the phase of work. The "End Phase X" activity shall have an "LF" constraint date equal to the completion date for the project, and a zero day duration.

3.3.4.3 Phase X

The Contractor shall include a hammock type activity for each project phase called "Phase X" where "X" refers to the phase of work. The "Phase X" activity shall be logically tied to the earliest and latest activities in the phase.

3.3.5 Default Progress Data Disallowed

Actual Start and Finish dates shall not be automatically updated by default mechanisms that may be included in CPM scheduling software systems. Actual Start and Finish dates on the CPM schedule shall match those dates provided from Contractor Quality Control Reports. Failure of the Contractor to document the Actual Start and Finish dates on the Daily Quality Control report for every in-progress or completed activity, and failure to ensure that the data contained on the Daily Quality Control reports is the sole basis for schedule updating shall result in the disapproval of the Contractor's schedule and the inability of the Contracting Officer to evaluate Contractor progress for payment purposes. Updating of the percent complete and the remaining duration of any activity shall be independent functions. Program features which calculate one of these parameters from the other shall be disabled.

3.3.6 Out-of-Sequence Progress

Activities that have posted progress without all preceding logic being satisfied (Out-of-Sequence Progress) will be allowed only on a case-by-case approval of the Contracting Officer. The Contractor shall propose logic corrections to eliminate all out of sequence progress or justify not changing the sequencing for approval prior to submitting an updated project schedule.

3.3.7 Negative Lags

Lag durations contained in the project schedule shall not have a negative value.

3.4 PROJECT SCHEDULE SUBMISSIONS

The Contractor shall provide the submissions as described below. The data for each submission is as follows:

The contractor shall provide a bar chart schedule for the first 30 calendar days of the contract at the Pre-construction conference.

3.4.1 Preliminary NAS Project Schedule Submission

The Preliminary NAS Project Schedule, defining the Contractor's planned operations for the first {90} calendar days shall be submitted for approval at within 21 days after NTP. The approved preliminary schedule shall be used for payment purposes not to exceed {90} calendar days after NTP. The preliminary schedule shall be detailed for the first {90} days and depict the remainder of the project in summary format.
The preliminary schedule shall be submitted on data disk or CD (2 copies).

Two hard copy of diagrams in color.

Three hard copies of all sorts / report ----earning curve----manpower plot

3.4.2 Initial NAS Project Schedule Submission

The Initial NAS Project Schedule shall be submitted for approval within 60 calendar days after NTP is acknowledged. The schedule shall include detailed activities for the entire project with a reasonable sequence of activities, and shall be at a reasonable level of detail as approved by the Contracting Officer.

The Initial schedule shall be submitted on data disk or CD (2 copies).

Two hard copy of diagrams in color.

Three hard copies of all sorts / report ----earning curve----manpower plot

3.4.3 Monthly Network Analysis Updates (Entire NAS Project Schedule)

The Contractor shall submit monthly schedule updates to the Contracting Officer for approval. Monthly updates shall continue until the contract is accepted by the Contracting Officer. These submissions shall enable the Contracting Officer to evaluate the Contractor's monthly progress.

The contractor's invoice may be deemed as an improper invoice, if it fails to provide monthly updates acceptable to Contracting Officer, this may delay progress payment and may result in an interim unsatisfactory performance rating. The contractor shall include its requests to revise/adjust the NAS schedule for approval, prior to implementing the revisions into the official schedule.

3.4.4 Review and Evaluation

After the Government's review(s) of the Initial Network Analysis Schedule, the Contractor shall meet with the Contracting Officer to discuss the review and evaluation of the NAS submittal. Revisions necessary as a result of this review shall be resubmitted for acceptance within 10 calendar days after the meeting.

3.4.4.1 Acceptance

Review comments made by the Government on the Contractor's schedule(s) will not relieve the Contractor from compliance with requirements of the Contract Documents. The Contractor is responsible for scheduling, sequencing, and prosecuting the Work to comply with the requirements of the Contract Documents. Government acceptance extends only to the activities of the Contractor's schedule that the Government has been assigned responsibility for and agrees it is responsible. The Government will also

review for contract imposed schedule constraints and conformance, and cost loading of the CPM activities. Comments offered on other parts of the schedule, which the Contractor is assigned responsibility, are offered as a courtesy and are not conditions of Government acceptance; but are for the general conformance with established industry schedule concepts.

a. When the Initial NAS Project Schedule is submitted and accepted by the Contracting Officer, it will then be considered the "Baseline Network Analysis Schedule". The Baseline Network Analysis Schedule will then be used by the Contractor for planning, organizing, and directing the work; reporting progress; and requesting payment for work accomplished. The schedule will be updated monthly by the Contractor and submitted monthly with the progress pay request to reflect the current status of the work. Submittal and acceptance of the Baseline Network Analysis Schedule and accurate updated schedules accompanying the pay requests are both conditions precedent to processing pay requests. Only bonds will be paid prior to acceptance of the Baseline Schedule(s).

b. Submittal of the Network, and subsequent schedule updates, will be understood to be the Contractor's representation that the submitted schedule meets all of the requirements of the Contract Documents, accurately reflects the work accomplished, and that Work will be executed in the sequence indicated on the submitted schedule.

3.4.4.2 Baseline Network Analysis Schedule

Once review comments are resolved and the Contracting Officer has accepted the Construction Network Analysis Schedule, the Contractor shall within 5 calendar days furnish:

a. Two sets of data disks containing the project schedule shall be provided for the initial submission and every periodic project update. Data shall be submitted on electronic media that is acceptable to the Contracting Officer. A permanent exterior label shall be affixed to each disk submitted. The label shall indicate the type of schedule (Design NAS, Construction NAS, Baseline, Update, Recovery, Change, etc.), full contract number, Project Name used to identify project in scheduling software, contract name & location, data status date, diskette number with total number of diskettes in set, software name and version used to run the schedule, and the name and telephone number of person responsible for the schedule.

For major revisions, updates or changes to the network diagrams, once accepted by the Contracting Officer, the Contractor shall submit these same diagrams and reports.

3.4.5 Standard Activity Coding Dictionary

The Contractor shall use the activity coding structure defined in the Standard Data Exchange Format (SDEF) in ER 1-1-11, Appendix A. This exact structure is mandatory, even if some fields are not used.

3.5 SUBMISSION REQUIREMENTS

The following items shall be submitted by the Contractor for the

preliminary submission, initial submission, and every periodic project schedule update throughout the life of the project:

3.5.1 Data Disks

Two data disks containing the project schedule shall be provided. Data on the disks shall adhere to the SDEF format specified in ER 1-1-11, Appendix A.

3.5.1.1 File Medium

The electronic files will be supplied on compact disc, read-only memory (CD-ROM).unless otherwise approved by the Contracting Officer.

3.5.1.2 Disk Label

A permanent exterior label shall be affixed to each disk submitted. The label shall indicate the type of schedule (Preliminary, Initial, Update, or Change), full contract number, project name, project location, data date, name and telephone number or person responsible for the schedule, and the MS-DOS version used to format the disk.

3.5.1.3 File Name

Each file submitted shall have a name related to either the schedule data date, project name, or contract number. The Contractor shall develop a naming convention that will ensure that the names of the files submitted are unique. The Contractor shall submit the file naming convention to the Contracting Officer for approval.

3.5.2 Narrative Report

A Narrative Report shall be provided with the preliminary, initial, and each monthly update of the project schedule. This report shall include: a description of activities along the most critical paths, a description of current and anticipated problem areas or delaying factors and their impact, and an explanation of corrective actions taken or required to be taken. The narrative report is expected to relay to the Government, the Contractor's thorough analysis of the schedule output and its plans to compensate for any problems, either current or potential, which are revealed through that analysis. If the contractor believes that any Government action or inaction has, or potentially, will impact its progress, it will include the specific notice of the fact in this report. This information should include the activity number of the impacted work, nature and duration of the impact.

The narrative report shall address all modifications and weather activities that were input for the progress and their impact on the contract completion and total float.

3.5.3 Approved Changes Verification

Only project schedule changes that have been previously approved by the Contracting Officer shall be included in the schedule submission. The Narrative Report shall specifically reference, on an activity by activity basis, all changes made since the previous period and relate each change to documented, approved schedule changes.

3.5.4 Schedule Reports

The format for each activity for the schedule reports listed below shall contain: Activity Numbers, Activity Description, Original Duration, Remaining Duration, Early Start Date, Early Finish Date, Late Start Date, Late Finish Date, Total Float. Actual Start and Actual Finish Dates shall be printed for those activities in progress or completed.

3.5.4.1 Milestone Report

The established monthly and special milestones shall be included in this report. The milestones must be established for each significant project features such as: Clearing-grading-demolition, foundation, slab-on-grade, structure-frame, exterior walls-windows, roof-building dry-in, interior walls-mech/elect R/I, above ceiling mech/elect R/I, ceiling, interior wall finish--doors, painting-coverings, floor finish, installation of mech/elect and other equipment-fixtures-casework, plumbing, HVAC system, finish interior mech/elect, testing-commissioning mech/elect systems, onsite utilities, paving-landscaping, prefinal-final inspections-final cleanup and/or other features (as applicable for the project).

The milestones for a building must approximate the following

| Milestone work activity | % of total duration |
|---|---|
| NTP | 0% |
| STRUCTURE COMPLETE | 36% |
| ROOF COMPLETE | 40% |
| BUILDING DRY-IN | 44% |
| INTERIOR WALLS COMPLETE | 53% |
| PLUMBING COMPLETE | 78% |
| FLOORING COMPLETE | 80% |
| HVAC DUCTWORK | 88% |
| FINISH MECH/ELECT SYSTEMS COMPLETE | 91% |
| QC TESTING COMPLETE | 92% |
| QA ACCEPTANCE TESTING COMPLETE | 93% |
| CQC INSPECTION OF ENTIRE CONTRACT | 95% |
| PREFINAL INSPECTION | 97% |
| FINAL INSPECTION | 99% |
| CCD | 100% |

Late Start /Late Finish Report

Late Start -Actual Start/Late Finish-Actual Finish-----total float-duration sort ----------sorted by LS in chronological order from data date to contract completion date.

3.5.4.2 Activity Report

A list of all activities sorted according to activity number.

3.5.4.3 Logic Report

A list of Preceding and Succeeding activities for every activity in ascending order by activity number. Preceeding and succeeding activities shall include all information listed above in paragraph Schedule Reports. A blank line shall be left between each activity grouping.

3.5.4.4 Total Float Report

A list of all incomplete activities sorted in ascending order of total float. Activities which have the same amount of total float shall be listed in ascending order of Early Start Dates. Completed activities shall not be shown on this report.

3.5.4.5 Earnings Report

A compilation of the Contractor's Total Earnings on the project from the NTP until the most recent Monthly Progress Meeting. This report shall reflect the Earnings of specific activities based on the agreements made in the field and approved between the Contractor and Contracting Officer at the most recent Monthly Progress Meeting. Provided that the Contractor has provided a complete schedule update, this report shall serve as the basis of determining Contractor Payment. Activities shall be grouped by bid item and sorted by activity numbers. This report shall: sum all activities in a bid item and provide a bid item percent; and complete and sum all bid items to provide a total project percent complete. The printed report shall contain, for each activity: the Activity Number, Activity Description, Original Budgeted Amount, Total Quantity, Quantity to Date, Percent Complete (based on cost), and Earnings to Date.

3.5.5 Network Diagram

One hard copy of the network diagram shall be required on the preliminary schedule, initial schedule submission, and updated on each monthly schedule submissions. Monthly updates must indicate actual progress as of the data date. The network diagram shall depict and display the order and interdependence of activities and the sequence in which the work is to be accomplished.

Network diagrams shall show the order and interdependence of project activities and the sequence in which the work is to be accomplished, as planned by the Contractor. The network diagramming procedure which will be used will show how the start of a given activity is dependent on the completion of preceding activities, and how its completion restricts the start of following activities.

Activity Duration:

The activity duration shall be indicated in "work" days, and revise the assigned calendar.

The contractor may request to change the work days from 5 days/week to 6 or 7 days/week should this action become necessary to regain the schedule due to problems unrelated to the Government actions.

Contractor submissions shall include reasonable activity durations as determined by the contractor and subcontractors. The durations are to be determined by the contractor using the planned crew size/composition.

The network diagram shall be required on the initial schedule submission and on monthly schedule update submissions. The network diagram shall depict and display the order and interdependence of activities and the sequence in which the work is to be accomplished. The Contracting Officer will use, but is not limited to, the following conditions to review compliance with this paragraph:

3.5.5.1 Continuous Flow

Diagrams shall show a continuous flow from left to right with no arrows from right to left. The activity number, description, duration, and estimated earned value shall be shown on the diagram.

3.5.5.2 Project Milestone Dates

Dates shall be shown on the diagram for start of project, any contract required interim completion dates, and contract completion dates.

3.5.5.3 Critical Path

The critical path shall be clearly shown.

3.5.5.4 Banding

Activities shall be grouped to assist in the understanding of the activity sequence. Typically, this flow will group activities by category of work, work area and/or responsibility.

3.5.5.5 Earning (S-Curves)

Earnings (cash flow) curves (as required for submissions) shall show scheduled ES/EF and LS/LF curves

The monthly updates must indicate the actual progress plotted as of the data date.

The cash flow curves are affected by the assigned cost and duration of the activities.

The LS/LF cash flow curve is expected approximate 40% earning (without stored material) @ 50% of the contract duration and 70% earning @ 70% of contract duration.

Earnings curves showing projected early and late earnings and earnings to date.

## 3.6 PERIODIC PROGRESS MEETINGS

There will be two progress meetings.

a. A progress update meeting will be held at the onsite between USACE and the authorized contractor representatives, on the agreed cut-off date established at the pre-construction conference. During this meeting the Contractor shall indicate it's requested percentage completed on each activity on which there was a revised percentage of completion. The Contracting Officer must approve actual progress percentages for each Progress meetings to discuss payment shall include a monthly onsite meeting or other regular intervals mutually agreed to at the pre-construction conference. During this meeting the Contractor shall describe, on an activity-by-activity basis, all proposed revisions and adjustments to the project schedule required to reflect the current status of the project. The Contracting Officer will approve activity progress, proposed revisions, and adjustments as appropriate.

The updated progress data will be evaluated at the second progress meeting.

b. A progress evaluation meeting shall be held with the contractor, after the updating of the current progress period work activities percentage is complete including modifications and adverse weather activities, to evaluate progress and the NAS schedule.

Adjustments to the NAS schedule. Update information must include the Actual Start Dates, Actual Finish Dates, Remaining Durations, and Cost to Date. The Contractor must address all the activities on an activity-by-activity basis during the second progress meeting.

The monthly updated NAS schedule is submitted to the Contracting Officer, for approval, with the contractor's request for progress payment. The evaluation will include a review of actual durations compared to scheduled durations for critical and non-critical activities, progress on critical activities and near critical activities, trends, and current/potential problem areas, cash flow progress, and projected workflow of activities.

The contractor's narrative report shall be available for review at least three days prior to the second progress meeting.

3.6.1 Meeting Attendance

The Contractor's Project Manager and Scheduler shall attend the regular progress meeting.

3.6.2 Update Submission Following Progress Meeting

A complete update of the project schedule containing all approved progress, revisions, and adjustments, based on the regular progress meeting, shall be submitted not later than 4 working days after the monthly progress meeting.

3.6.3 Progress Meeting Contents

Update information, including Actual Start Dates, Actual Finish Dates, Remaining Durations, and Cost-to-Date shall be subject to the approval of the Contracting Officer. As a minimum, the Contractor shall address the following items on an activity by activity basis during each progress meeting.

3.6.3.1 Start and Finish Dates

The Actual Start and Actual Finish dates for each activity currently in-progress or completed.

3.6.3.2 Time Completion

The estimated Remaining Duration for each activity in-progress. Time-based progress calculations shall be based on Remaining Duration for each activity.

3.6.3.3 Cost Completion

The earnings for each activity started. Payment will be based on earnings for each in-progress or completed activity. Payment for individual activities will not be made for work that contains quality defects. A portion of the overall project amount may be retained based on delays of

activities.

3.6.3.4 Logic Changes

All logic changes pertaining to NTP on change orders, change orders to be incorporated into the schedule, contractor proposed changes in work sequence, corrections to schedule logic for out-of-sequence progress, lag durations, and other changes that have been made pursuant to contract provisions shall be specifically identified and discussed.

3.6.3.5 Other Changes

Other changes required due to delays in completion of any activity or group of activities include: 1) delays beyond the Contractor's control, such as strikes and unusual weather. 2) delays encountered due to submittals, Government Activities, deliveries or work stoppages which make re-planning the work necessary. 3) Changes required to correct a schedule which does not represent the actual or planned prosecution and progress of the work.

3.7 REQUESTS FOR TIME EXTENSIONS

In the event the Contractor requests a time extension of the contract completion date, or any interim milestone date, the Contractor shall furnish the following for a determination as to whether or not the Contractor is entitled to an extension of time under the provisions of the contract: justification, project schedule data, and supporting evidence as the Contracting Officer may deem necessary. Submission of proof of delay shall be based on a subnet/fragnet of work activities, revised activity logic, duration, and costs (updated to the specific date that the delay occurred) is required for any time extension approvals. The project schedule shall clearly display that the Contractor has used, in full, all the float time available for the work involved with this request. Actual delays that are found to be caused by the Contractor's own actions, which result in the extension of the schedule, shall not be a cause for a time extension to the contract completion date.

3.7.1 Justification of Delay

The project schedule shall clearly display that the Contractor has used, in full, all the float time available for the work involved with this request. The Contracting Officer's determination as to the number of allowable days of contract extension shall be based upon the project schedule updates in effect for the time period in question, and other factual information. Actual delays that are found to be caused by the Contractor's own actions, which result in the extension of the schedule, will not be a cause for a time extension to the contract completion date.

3.7.2 Submission Requirements for Time Extension Requests

The Contractor shall submit a comprehensive time analysis and justification for each "Request for Proposal" for a change in the contract, based upon the most recent approved schedule update at the time of the RFP issued. Such a time analysis and justification shall be in accordance with the requirements of other appropriate Contract Clauses and shall include, as a minimum:

a. A subnet/fragnet of activities indicating all new change activities and the affect on existing schedule activities.

b. A brief explanation of the causes of the change.

c. An analysis of the overall impact the subnet/fragnet has when applied to the current-updated approved NAS schedule.

d. Activities impacted in each justification for change shall be identified by a unique activity code contained in the required data file.

e. Modifications to the contract

f. Unpriced, unilateral and bilateral (without agreement on time) modifications

Upon receipt of the signed SF 30, for un-priced and unilateral modifications (or bilateral modifications with agreement on costs without an agreement on time, the Contractor shall submit proposed schedule revisions (in the form of a proposed subnet/fragnet) to the Contracting Officer for approval, within 14 days of the SF 30 being issued. The proposed (subnet/fragnet) revisions to the schedule will be approved by the Contracting Officer prior to application of those changes within the project schedule.

Should the contractor fail or refuse to submit the provisions, the Contracting Officer may furnish the Contractor suggested (subnet/fragnet) revisions to the project schedule.

Upon receipt, the Contractor shall include these subnet/fragnet revisions in the project schedule.

If the Contractor has any objections to the revisions furnished by the Contracting Officer, the Contractor shall advise the Contracting Officer within 14 days of receipt of the revisions.

Regardless of the objections, the Contractor shall continue to update the schedule with the Contracting Officer's revisions until a mutual agreement on the revisions is reached.

If the Contractor fails to submit alternative revisions within 2 weeks of receipt of the Contracting officer's proposed revisions, the contractor will be deem to have concurred with the Contracting Officer's proposed revisions. The proposed revisions will be the basis for an "equitable adjustment" for performance of the work.

Bilateral modifications shall be entered into the NAS schedule, utilizing the subnet/fragnet as agreed during negotiations, immediately after receipt of signed SF 30. Entries to the schedule must be approved by Contracting Officer.

All modifications subnets/fragnets shall be applied to the NAS schedule immediately in the sequence in which they were finalized (received signed SF 30). The modification with time extension shall result in new work activities entered adjacent to the critical path work activity affected by the modification.

Weather time extensions must be included monthly upon receipt of the written results of the monthly weather evaluation from the Contracting Officer.

3.7.3 Contractor falls behind the approved project schedule

If the Contractor falls behind its approved schedule, (behind the LS/LF cash flow curve or more than 10 work days of negative float) or performs the work in such a manner that the network diagram and mathematical analysis no longer indicate reasonable logic and duration for completion of the work by the current contract completion date, as determined by the Contracting Officer, the Contractor shall promptly provide a supplemental NAS recovery or completion schedule for completion by the current completion date, by reducing the remaining durations, revising logic, or adjusting resources onsite (in addition to the original approved NAS schedule) as approved by the Contracting Officer. The supplemental schedule shall be resource loaded with crew size and productivity for each remaining activity, and indicating overtime, weekend work, double shifts needed to regain the schedule, in accordance with FAR 52.236-15, without additional cost to the Government. The supplement schedule shall not replace the original approved schedule as the official contract schedule. The original approved schedule shall be updated monthly (in addition to the supplemental schedule) and monitored by the contractor and the Contracting Officer to determine the effect of the supplemental schedule progress has on the contract progress to regain its rate of progress for timely completion as specified.

The Contractor shall not artificially improve its progress by revising the schedule logic restraints or shortening future work activity durations. The contractor may improve its progress by performing sequential work activities concurrently or by performing activities more quickly than planned, but such improvements shall be indicated on a supplement schedule and shall not be recorded on the official until they have actually been achieved by the contractor. The additional resources required to improve the progress must be evident on the work site.

Failure of the contractor to perform work and maintain progress in accordance with the supplemental recovery or completion schedule, may result in an interim and final unsatisfactory performance rating and/or may result in corrective action by the contracting officer in accordance with FAR 52.236-15.

The Contractor shall submit a justification for each request for a change in the contract completion date of under 2 weeks based upon the most recent schedule update at the time of the NTP or constructive direction issued for the change. Such a request shall be in accordance with the requirements of other appropriate Contract Clauses and shall include, as a minimum:

a. A list of affected activities, with their associated project schedule activity number.

b. A brief explanation of the causes of the change.

c. An analysis of the overall impact of the changes proposed.

d. A sub-network of the affected area.

Activities impacted in each justification for change shall be identified by a unique activity code contained in the required data file.

3.7.4 Additional Submission Requirements

For any requested time extension of over 2 weeks, the Contracting Officer

may request an interim update with revised activities for a specific change request. The Contractor shall provide this disk within 4 days of the Contracting Officer's request.

## 3.8 DIRECTED CHANGES

If the NTP is issued for changes prior to settlement of price and/or time, the Contractor shall submit proposed schedule revisions to the Contracting Officer within 2 weeks of the NTP being issued. The proposed revisions to the schedule will be approved by the Contracting Officer prior to inclusion of those changes within the project schedule. If the Contractor fails to submit the proposed revisions, the Contracting Officer may furnish the Contractor with suggested revisions to the project schedule. The Contractor shall include these revisions in the project schedule until revisions are submitted, and final changes and impacts have been negotiated. If the Contractor has any objections to the revisions furnished by the Contracting Officer, the Contractor shall advise the Contracting Officer within 2 weeks of receipt of the revisions. Regardless of the objections, the Contractor shall continue to update the schedule with the Contracting Officer's revisions until a mutual agreement in the revisions is reached. If the Contractor fails to submit alternative revisions within 2 weeks of receipt of the Contracting Officer's proposed revisions, the Contractor will be deemed to have concurred with the Contracting Officer's proposed revisions. The proposed revisions will then be the basis for an equitable adjustment for performance of the work.

## 3.9 OWNERSHIP OF FLOAT

Float available in the schedule, at any time, shall not be considered for the exclusive use of either the Government or the Contractor.

-- End of Section --

SECTION TABLE OF CONTENTS

DIVISION 01 - GENERAL REQUIREMENTS

SECTION 01330

SUBMITTAL PROCEDURES

**03/04**

PART 1 GENERAL

1.1 DEFINITIONS
1.1.1 Submittal
1.1.2 Submittal Descriptions (SD)
1.1.3 Approving Authority
1.1.4 Work
1.2 SUBMITTALS
1.3 SUBMITTAL CLASSIFICATION
1.3.1 Government Approved
1.3.2 Information Only
1.4 APPROVED SUBMITTALS
1.5 DISAPPROVED SUBMITTALS
1.6 WITHHOLDING OF PAYMENT

PART 2 PRODUCTS (NOT USED)

PART 3 GENERAL

3.1 SUBMITTAL REGISTER
3.2 SCHEDULING
3.3 TRANSMITTAL FORM (ENG FORM 4025)
3.4 SUBMITTAL PROCEDURES
3.4.1 Procedures
3.4.2 Deviations
3.5 CONTROL OF SUBMITTALS
3.6 GOVERNMENT APPROVED SUBMITTALS
3.6.1 Submission of Government Approved Submittals
3.7 INFORMATION ONLY SUBMITTALS
3.8 STAMPS

-- End of Section Table of Contents --

SECTION 01330

SUBMITTAL PROCEDURES
**03/04**

PART 1 GENERAL

1.1 DEFINITIONS

1.1.1 Submittal

Contract Clauses "FAR 52.236-5, Material and Workmanship," paragraph (b) and "FAR 52.236-21, Specifications and Drawings for Construction," paragraphs (d), (e), and (f) apply to all "submittals."

1.1.2 Submittal Descriptions (SD)

Submittals requirements are specified in the technical sections. Submittals are identified by SD numbers and titles as follows.

SD-01 Preconstruction Submittals

Certificates of insurance.
Surety bonds.
List of proposed subcontractors.
List of proposed products.
Construction Progress Schedule.
Submittal register.
Schedule of prices.
Health and safety plan.
Work plan.
Quality control plan.
Environmental protection plan.

SD-02 Shop Drawings

Drawings, diagrams and schedules specifically prepared to illustrate some portion of the work.

Diagrams and instructions from a manufacturer or fabricator for use in producing the product and as aids to the Contractor for integrating the product or system into the project.

Drawings prepared by or for the Contractor to show how multiple systems and interdisciplinary work will be coordinated.

SD-03 Product Data

Catalog cuts, illustrations, schedules, diagrams, performance charts, instructions and brochures illustrating size, physical appearance and other characteristics of materials or equipment for some portion of the work.

Samples of warranty language when the contract requires extended product warranties.

SD-04 Samples

Physical examples of materials, equipment or workmanship that illustrate functional and aesthetic characteristics of a material or product and establish standards by which the work can be judged.

Color samples from the manufacturer's standard line (or custom color samples if specified) to be used in selecting or approving colors for the project.

Field samples and mock-ups constructed on the project site establish standards by which the ensuring work can be judged. Includes assemblies or portions of assemblies which are to be incorporated into the project and those which will be removed at conclusion of the work.

SD-05 Design Data

Calculations, mix designs, analyses or other data pertaining to a part of work.

SD-06 Test Reports

Report signed by authorized official of testing laboratory that a material, product or system identical to the material, product or system to be provided has been tested in accord with specified requirements. (Testing must have been within three years of date of contract award for the project.)

Report which includes findings of a test required to be performed by the Contractor on an actual portion of the work or prototype prepared for the project before shipment to job site.

Report which includes finding of a test made at the job site or on sample taken from the job site, on portion of work during or after installation.

Investigation reports.

Daily checklists.

Final acceptance test and operational test procedure.

SD-07 Certificates

Statements signed by responsible officials of manufacturer of product, system or material attesting that product, system or material meets specification requirements. Must be dated after award of project contract and clearly name the project.

Document required of Contractor, or of a supplier, installer or subcontractor through Contractor, the purpose of which is to further quality of orderly progression of a portion of the work by documenting procedures, acceptability of methods or personnel qualifications.

Confined space entry permits.

SD-08 Manufacturer's Instructions

Preprinted material describing installation of a product, system or

material, including special notices and Material Safety Data sheets concerning impedances, hazards and safety precautions.

SD-09 Manufacturer's Field Reports

Documentation of the testing and verification actions taken by manufacturer's representative to confirm compliance with manufacturer's standards or instructions.

Factory test reports.

SD-10 Operation and Maintenance Data

Data that is furnished by the manufacturer, or the system provider, to the equipment operating and maintenance personnel. This data is needed by operating and maintenance personnel for the safe and efficient operation, maintenance and repair of the item.

SD-11 Closeout Submittals

Documentation to record compliance with technical or administrative requirements or to establish an administrative mechanism.

1.1.3 Approving Authority

Office authorized to approve submittal.

1.1.4 Work

As used in this section, on- and off-site construction required by contract documents, including labor necessary to produce submittals, construction, materials, products, equipment, and systems incorporated or to be incorporated in such construction.

1.2 SUBMITTALS

Government approval is required for submittals with a "G" designation; submittals not having a "G" designation are for information only or as otherwise designated. When used, a designation following the "G" designation identifies the office that will review the submittal for the Government. The following shall be submitted in accordance with Section 01330 SUBMITTAL PROCEDURES:

1.3 SUBMITTAL CLASSIFICATION

Submittals are classified as follows:

1.3.1 Government Approved

Government approval is required for extensions of design, critical materials, deviations, equipment whose compatibility with the entire system must be checked, and other items as designated by the Contracting Officer. Within the terms of the Contract Clause entitled "Specifications and Drawings for Construction," they are considered to be "shop drawings."

Submittals are indicated as AO for Area Office Approval or AE for Architect/Engineer Approval.

1.3.2 Information Only

All submittals not requiring Government approval will be for information only. They are not considered to be "shop drawings" within the terms of the Contract Clause referred to above. All submittals not requiring Government approval will be for information only.

1.4 APPROVED SUBMITTALS

The Contracting Officer's approval of submittals shall not be construed as a complete check, but will indicate only that the general method of construction, materials, detailing and other information are satisfactory. Approval will not relieve the Contractor of the responsibility for any error which may exist, as the Contractor under the Contractor Quality Control (CQC) requirements of this contract is responsible for design, dimensions, all design extensions, such as the design of adequate connections and details, etc., and the satisfactory construction of all work. After submittals have been approved by the Contracting Officer, no resubmittal for the purpose of substituting materials or equipment will be considered unless accompanied by an explanation of why a substitution is necessary.

1.5 DISAPPROVED SUBMITTALS

The Contractor shall make all corrections required by the Contracting Officer and promptly furnish a corrected submittal in the form and number of copies specified for the initial submittal. If the Contractor considers any correction indicated on the submittals to constitute a change to the contract, a notice in accordance with the Contract Clause "Changes" shall be given promptly to the Contracting Officer.

1.6 WITHHOLDING OF PAYMENT

Payment for materials incorporated in the work will not be made if required approvals have not been obtained.

PART 2 PRODUCTS (NOT USED)

PART 3 GENERAL

As required by paragraph 3.6.1, all submittals designated for Government Approval shall be submitted within 63 calendar days of notice to proceed. The Contractor shall make submittals as required by the specifications. The Contracting Officer may request submittals in addition to those specified when deemed necessary to adequately describe the work covered in the respective sections. Units of weights and measures used on all submittals shall be the same as those used in the contract drawings. Each submittal shall be complete and in sufficient detail to allow ready determination of compliance with contract requirements. Prior to submittal, all items shall be checked and approved by the Contractor's Quality Control (CQC) System Manager and each item shall be stamped, signed, and dated by the CQC System Manager indicating action taken. Proposed deviations from the contract requirements shall be clearly identified. Submittals shall include items such as: Contractor's, manufacturer's, or fabricator's drawings; descriptive literature including

(but not limited to) catalog cuts, diagrams, operating charts or curves; test reports; test cylinders; samples; O&M manuals (including parts list); certifications; warranties; and other such required submittals. Submittals requiring Government approval shall be scheduled and made prior to the acquisition of the material or equipment covered thereby. Samples remaining upon completion of the work shall be picked up and disposed of in accordance with manufacturer's Material Safety Data Sheets (MSDS) and in compliance with existing laws and regulations.

## 3.1 SUBMITTAL REGISTER

At the end of this section is a submittal register showing items of equipment and materials for which submittals are required by the specifications; this list may not be all inclusive and additional submittals may be required. The Contractor shall maintain a submittal register for the project in accordance with Section 01312 QUALITY CONTROL SYSTEM (QCS).

## 3.2 SCHEDULING

Submittals covering component items forming a system or items that are interrelated shall be scheduled to be coordinated and submitted concurrently. Certifications to be submitted with the pertinent drawings shall be so scheduled. Adequate time (a minimum of 30 calendar days exclusive of mailing time) shall be allowed and shown on the register for review and approval. No delay damages or time extensions will be allowed for time lost in late submittals.

## 3.3 TRANSMITTAL FORM (ENG FORM 4025)

The sample transmittal form (ENG Form 4025) shall be used for submitting both Government approved and information only submittals in accordance with the instructions on the reverse side of the form. These forms are included in the QCS software that the Contractor is required to use for this contract. This form shall be properly completed by filling out all the heading blank spaces and identifying each item submitted. Special care shall be exercised to ensure proper listing of the specification paragraph and/or sheet number of the contract drawings pertinent to the data submitted for each item.

## 3.4 SUBMITTAL PROCEDURES

Submittals shall be made as follows:

### 3.4.1 Procedures

All samples of materials submitted as required by these specifications shall be properly identified and labeled for ready identification, and upon being certified, stored at the site of the work for jobsite use until all work has been completed and accepted by the CO.

### 3.4.2 Deviations

For submittals which include proposed deviations requested by the Contractor, the column "variation" of ENG Form 4025 shall be checked. The Contractor shall set forth in writing the reason for any deviations and annotate such deviations on the submittal. The Government reserves the right to rescind inadvertent approval of submittals containing unnoted deviations.

## 3.5 CONTROL OF SUBMITTALS

The Contractor shall carefully control his procurement operations to ensure that each individual submittal is made on or before the Contractor scheduled submittal date shown on the approved "Submittal Register."

## 3.6 GOVERNMENT APPROVED SUBMITTALS

Upon completion of review of submittals requiring Government approval, the submittals will be identified as having received approval by being so stamped and dated. Seven copies of the submittal will be retained by the Contracting Officer and 3 copies of the submittal will be returned to the Contractor.

### 3.6.1 Submission of Government Approved Submittals

As soon as practicable after notice to proceed, but not later than 63 calendar days after notice to proceed, the Contractor shall forward to the Contacting Officer all copies of submittals designated for Government approval(G). Submittals shall be as required in the technical sections of this specification, including shop drawings, product data, and samples. Submittal types SD-06 (test Reports), SD-09 (Manufacturers Field Reports, SD-10 (Operations and Maintenance Data), and SD-11 (Closeout Submittals) need not be submitted within this 63 day limit; These submittal types shall be submied by the dates/times established in the specifications.

## 3.7 INFORMATION ONLY SUBMITTALS

Normally submittals for information only will not be returned. Approval of the Contracting Officer is not required on information only submittals. The Government reserves the right to require the Contractor to resubmit any item found not to comply with the contract. This does not relieve the Contractor from the obligation to furnish material conforming to the plans and specifications; will not prevent the Contracting Officer from requiring removal and replacement of nonconforming material incorporated in the work; and does not relieve the Contractor of the requirement to furnish samples for testing by the Government laboratory or for check testing by the Government in those instances where the technical specifications so prescribe.

## 3.8 STAMPS

Stamps used by the Contractor on the submittal data to certify that the submittal meets contract requirements shall be similar to the following:

CONTRACTOR

(Firm Name)

_____ Approved

_____ Approved with corrections as noted on submittal data and/or attached sheets(s).

SIGNATURE: _____

TITLE: _____

DATE: _____

-- End of Section --

# SUBMITTAL REGISTER

CONTRACT NO.

TITLE AND LOCATION
LANGLEY AIR FORCE BASE

CONTRACTOR

| ACTIVITY NO | TRANSMITTAL NO | SPEC SECT | DESCRIPTION ITEM SUBMITTED | PARAGRAPH # | CLASSIFICATION | GOVT OR A/E REVWR | CONTRACTOR: SCHEDULE DATES | | | CONTRACTOR ACTION | | | APPROVING AUTHORITY | | | | | REMARKS |
|---|---|---|---|---|---|---|---|---|---|---|---|---|---|---|---|---|---|---|
| | | | | | | | SUBMIT | APPROVAL NEEDED BY | MATERIAL NEEDED BY | ACTION CODE | DATE OF ACTION | DATE FWD TO APPR AUTH/ DATE RCD FROM CONTR | DATE FWD TO OTHER REVIEWER | DATE RCD FROM OTH REVIEWER | ACTION CODE | DATE OF ACTION | MAILED TO CONTR/ DATE RCD FRM APPR AUTH | |
| (a) | (b) | (c) | (d) | (e) | (f) | | (g) | (h) | (i) | (j) | (k) | (l) | (m) | (n) | (o) | (p) | (q) | (r) |
| | | 01310 | SD-01 Preconstruction Submittals | | | | | | | | | | | | | | | |
| | | | View location map | 1.3 | G | | | | | | | | | | | | | |
| | | | Progress and completion pictures | 1.4 | G | | | | | | | | | | | | | |
| | | | Certificates of insurance | 1.5 | | | | | | | | | | | | | | |
| | | | SD-04 Samples | | | | | | | | | | | | | | | |
| | | | COLOR/FINISH BOARDS | 1.2 | G | | | | | | | | | | | | | |
| | | 01320 | SD-01 Preconstruction Submittals | | | | | | | | | | | | | | | |
| | | | Qualifications | 3.1 | G | | | | | | | | | | | | | |
| | | | Standard Activity Coding | 3.4.5 | | | | | | | | | | | | | | |
| | | | Dictionary | | | | | | | | | | | | | | | |
| | | | SD-02 Shop Drawings | | | | | | | | | | | | | | | |
| | | | Preliminary NAS Project Schedule | 3.4.1 | G | | | | | | | | | | | | | |
| | | | Initial NAS Project Schedule | 3.4.2 | G | | | | | | | | | | | | | |
| | | | Baseline Network Analysis | 3.4.4.2 | G | | | | | | | | | | | | | |
| | | | Schedule | | | | | | | | | | | | | | | |
| | | | Monthly Network Analysis | 3.4.3 | G | | | | | | | | | | | | | |
| | | | Updates | | | | | | | | | | | | | | | |
| | | 01351A | SD-03 Product Data | | | | | | | | | | | | | | | |
| | | | Exposure Monitoring/Air Sampling | 1.14 | | | | | | | | | | | | | | |
| | | | Program | | | | | | | | | | | | | | | |
| | | | Site Control Log | 1.30.2 | | | | | | | | | | | | | | |
| | | 01355A | SD-01 Preconstruction Submittals | | | | | | | | | | | | | | | |
| | | | Environmental Protection Plan | 1.7 | G | AE | | | | | | | | | | | | |
| | | 01356A | SD-07 Certificates | | | | | | | | | | | | | | | |
| | | | Mill Certificate or Affidavit | 2.1.3 | | | | | | | | | | | | | | |
| | | 01451 | SD-01 Preconstruction Submittals | | | | | | | | | | | | | | | |

# SUBMITTAL REGISTER

CONTRACT NO.

TITLE AND LOCATION
LANGLEY AIR FORCE BASE

CONTRACTOR

| ACTIVITY NO | TRANSMITTAL NO | SPEC SECT | DESCRIPTION ITEM SUBMITTED | PARAGRAPH # | CLASSIFICATION | GOVT OR A/E REVWR | CONTRACTOR: SCHEDULE DATES | | | CONTRACTOR ACTION | | | APPROVING AUTHORITY | | | | | MAILED TO CONTR/ DATE RCD FRM APPR AUTH | REMARKS |
|---|---|---|---|---|---|---|---|---|---|---|---|---|---|---|---|---|---|---|---|
| | | | | | | | SUBMIT | APPROVAL NEEDED BY | MATERIAL NEEDED BY | ACTION CODE | DATE OF ACTION | DATE FWD TO APPR AUTH/ DATE RCD FROM CONTR | DATE FWD TO OTHER REVIEWER | DATE RCD FROM OTH REVIEWER | ACTION CODE | DATE OF ACTION | | |
| (a) | (b) | (c) | (d) | (e) | (f) | | (g) | (h) | (i) | (j) | (k) | (l) | (m) | (n) | (o) | (p) | (q) | (r) |
| | | 01451 | Quality Control Plan | 3.2 | G | | | | | | | | | | | | | |
| | | 01452 | SD-07 Certificates | | | | | | | | | | | | | | | |
| | | | Special Inspector | 1.3 | G AO | | | | | | | | | | | | | |
| | | | Quality Assurance Plan | 1.4 | G AO | | | | | | | | | | | | | |
| | | 01452A | SD-07 Certificates | | | | | | | | | | | | | | | |
| | | | Special Inspector | 1.3 | G AO | | | | | | | | | | | | | |
| | | | Quality Assurance Plan | 1.4 | G AO | | | | | | | | | | | | | |
| | | 01525 | SD-01 Preconstruction Submittals | | | | | | | | | | | | | | | |
| | | | Accident Prevention Plan (APP) | 1.8 | G | | | | | | | | | | | | | |
| | | | Activity Hazard Analysis (AHA) | 1.9 | G | | | | | | | | | | | | | |
| | | | SD-06 Test Reports | | | | | | | | | | | | | | | |
| | | | Reports | 1.13 | | | | | | | | | | | | | | |
| | | | Accident Reports | 1.13.1 | | | | | | | | | | | | | | |
| | | | Regulatory Citations and | 1.13.3 | | | | | | | | | | | | | | |
| | | | Violations | | | | | | | | | | | | | | | |
| | | | Regulatory Citations and | 1.13.3 | | | | | | | | | | | | | | |
| | | | Violations | | | | | | | | | | | | | | | |
| | | | Certificate of Compliance | 1.13.5 | | | | | | | | | | | | | | |
| | | | SD-07 Certificates | | | | | | | | | | | | | | | |
| | | | Confined Space Entry Permit | 1.10 | | | | | | | | | | | | | | |
| | | 01780 | SD-02 Shop Drawings | | | | | | | | | | | | | | | |
| | | | As-Built Drawings | 1.2.1 | G AE | | | | | | | | | | | | | |
| | | | As-Built Drawings | 1.2.1.3.# | G AE | | | | | | | | | | | | | |
| | | | As-Built Drawings | 1.2.1.3.# | G AE | | | | | | | | | | | | | |
| | | | | | | | | | | | | | | | | | | |
| | | | | | | | | | | | | | | | | | | |

SECTION 01351A

SAFETY, HEALTH, AND EMERGENCY RESPONSE (HTRW/UST)
**01/01**

## PART 1 GENERAL

### 1.1 REFERENCES

Soil and groundwater in the project area may be contaminated with petroleum products. This specification provides general health and safety requirements for construction as well as requirements specific to workers performing tasks where contact with contaminated soil or contaminated groundwater is likely.

The publications listed below form a part of this specification to the extent referenced. The publications are referred to in the text by basic designation only.

AMERICAN CONFERENCE OF GOVERNMENTAL INDUSTRIAL HYGIENISTS (ACGIH)

| | |
|---|---|
| ACGIH Limit Values | (Most recent issue) Threshold Limit Values for Chemical Substances and Physical Agents Biological Exposure Indices |

AMERICAN NATIONAL STANDARDS INSTITUTE (ANSI)

| | |
|---|---|
| ANSI Z358.1 | (1998) Emergency Eyewash and Shower Equipment |

U.S. NATIONAL ARCHIVES AND RECORDS ADMINISTRATION (NARA)

| | |
|---|---|
| 29 CFR 1904 | Recording and Reporting Occupational Injuries and Illnesses |
| 29 CFR 1910 | Occupational Safety and Health Standards |
| 29 CFR 1926 | Safety and Health Regulations for Construction |

U.S. ARMY CORPS OF ENGINEERS (USACE)

| | |
|---|---|
| EM 385-1-1 | (1996) U.S. Army Corps of Engineers Safety and Health Requirements Manual |
| ER 385-1-92 | (2003) Safety and Occupational Requirements for Hazardous, Toxic, and Radioactive Waste (HTRW) Activities |

NATIONAL INSTITUTE FOR OCCUPATIONAL SAFETY AND HEALTH (NIOSH)

| | |
|---|---|
| NIOSH 85-115 | (1985) Occupational Safety and Health Guidance Manual for Hazardous Waste Site Activities |

## 1.2 DESCRIPTION OF WORK

This section requires contractors to implement practices and procedures for working safely and in compliance with OSHA and USACE regulation while performing cleanup activities on uncontrolled hazardous waste sites.

## 1.3 SUBMITTALS

Government approval is required for submittals with a "G" designation; submittals not having a "G" designation are for information only. When used, a designation following the "G" designation identifies the office that will review the submittal for the Government. The following shall be submitted in accordance with Section 01330 SUBMITTAL PROCEDURES:

SD-03 Product Data

Exposure Monitoring/Air Sampling Program;

Personnel exposure monitoring/sampling results.

Site Control Log;

Record of each entry and exit into the site, as specified.

HAZWOPER Qualifications Certificates;

A certificate for each worker performing cleanup operations with potential for unacceptable occupational exposure signed by the safety and health manager and the occupational physician indicating the workers meet the training and medical surveillance requirements of this contract.

## 1.4 REGULATORY REQUIREMENTS

Work performed under this contract shall comply with EM 385-1-1, OSHA requirements in 29 CFR 1910 and 29 CFR 1926, especially OSHA's Hazardous Waste Operations and Emergency Response Standard 29 CFR 1926.65/29 CFR 1910.120 and state specific OSHA requirements where applicable. Matters of interpretation of standards shall be submitted to the appropriate administrative agency for resolution before starting work. Where the requirements of this specification, applicable laws, criteria, ordinances, regulations, and referenced documents vary, the most stringent requirements shall apply.

## 1.5 PRECONSTRUCTION SAFETY CONFERENCE

A preconstruction safety conference shall be scheduled prior to beginning of site work at which time representatives of the Contractor and Contracting Officer will review and discuss requirements relative to planning and administration of the overall safety program.

## 1.6 SAFETY AND HEALTH PROGRAM

The Contractor shall develop and implement a Safety and Health Program (SHP) which incorporates requirements in OSHA standards 29 CFR 1910, Section .120 (b) and 29 CFR 1926, Section .65 (b) and section 01.A.07 of EM 385-1-1. The Safety and Health Program shall address the items in paragraph (b) of 29 CFR 1910.120/29 CFR 1926.65 and Appendix A of EM 385-1-1 in corporate specific detail. These items are: Signature Sheet; Background

Information; Statement of Safety and Health Policy; Responsibilities and Lines of Authority; Subcontractors and Suppliers; Training; Safety and Health Inspections; Safety and Health Expectations, Incentives programs and Compliance; Accident Reporting; Medical Surveillance/Medical Support; Personal Protective Equipment; Standard Operating Procedures and Corporate Plans supporting occupational safety and health.

## 1.7 SITE SAFETY AND HEALTH PLAN

The Contractor shall develop and implement a Site Safety and Health Plan (SSHP) meeting the requirments of section 01.A.10 of EM 385-1-1 and 29 CFR 1910.120/29 CFR 1926.65 (b)(4). At a minimum, the SSHP shall address each element in Appendix C of ER 385-1-92 and shall incorporate an Activity Hazard Analysis meeting the requirments of 01.A.10 and Figure 1-1 of EM 385-1-1.

a. The SSHP shall be considered a living document and shall be updated as occupational safety and health conditions change during project execution and improved as occuptional safety and health lessons are learned during the course of the poject.

b. SSHP elements in Appendix C of ER 385-1-92 are: 1. Site Description and Contamination Characterization; 2. Activity Hazard Analysis; 3. Health and Safety Staff Organization, Qualifications and Responsibilities for the project; 4. Health and Safety Training requirements for the project; 5. Personal Protective Equipment; 6. Medical Surveillance requirments for the poject; 7. Radiation Dosimetry, if applicable; 8. Exposure Monitoring/Air Sampling; 9. Heat Stress/Cold Stress Prevention; 10. Applicable elements of the Safety and Health Program edited to meet site specific conditions and site specific standard operating safety procedures, engineering controls and work practices used to reduce exposure to contaminants and prevent accidents; 11. Site Control Measures; 12. Personal Hygiene and Decontamination; 13. Equipment Decontamination; 14. Emergency Equipment and First Aid Requirements; 15. Emergency Response and Contingency Procedures. 16. Accident Prevention; 17. Logs, Reports and Recordkeeping.

### 1.7.1 Acceptance and Modifications

Prior to submittal, the SSHP shall be signed and dated by the Safety and Health Manager and the Site Superintendent. The SSHP shall be submitted for review 30 days prior to the Preconstruction Safety Conference. Deficiencies in the SSHP will be discussed at the preconstruction safety conference, and the SSHP shall be revised to correct the deficiencies and resubmitted for acceptance. Onsite work shall not begin until the plan has been accepted. A copy of the written SSHP shall be maintained onsite. Changes and modifications to the accepted SSHP shall be made with the knowledge and concurrence of the Safety and Health Manager, the Site Superintendent, and the Contracting Officer. Should any unforeseen hazard become evident during the performance of the work, the Site Safety and Health Officer (SSHO) shall bring such hazard to the attention of the Safety and Health Manager, the Site Superintendent, and the Contracting Officer, both verbally and in writing, for resolution as soon as possible. In the interim, necessary action shall be taken to re-establish and maintain safe working conditions in order to safeguard onsite personnel, visitors, the public, and the environment. Disregard for the provisions of this specification or the accepted SSHP shall be cause for stopping of work until the matter has been rectified.

1.7.2 Availability

The SSHP shall be made available in accordance with 29 CFR 1910, Section .120 (b)(1)(v) and 29 CFR 1926, Section .65 (b)(1)(v).

1.8 SITE DESCRIPTION AND CONTAMINATION CHARACTERIZATION

1.8.1 Project/Site Conditions

Soil and groundwater contaminated with petroleum hydrocarbon constituents have been identified in the vicinity of the project and may be encountered during construction. Refer to the subsurface investigation report at the end of this section for additional information regarding soil and groundwater contamination.

1.9 SITE TASKS

Anticipated tasks and operations at the site include, but are not limited to:

a. Mobilization
b. Excavation/Trenching
c. Sampling
d. Backfilling
e. Decontamination
f. Demobilization

The Contractor shall develop a safety and health hazard/risk analysis for each site task performed. Address the potential hazards asssociated with each task, including safety hazards, chemical hazards, physical agents, and biological hazards. For chemical hazards, develop appropriate action levels and discuss the required actions associated with the action levels.

It is the Contractor's responsibility to reevaluate occupational safety and health hazards as the work progresses and to adjust the PPE and onsite operations, if necessary, so that the work is performed safely.

1.10 STAFF ORGANZATION, QUALIFICATION AND RESPONSIBILITIES

1.10.1 Safety and Health Manager

Safety and Health Manager shall be an Industrial Hygienist certified by the American Board of Industrial Hygiene or a safety professional certified by the Board of Certified Safety Professionals.

1). The Safety and Health Manager shall have the following additional qualifications:

a. A minimum of 3 years experience in developing and implementing safety and health programs at hazardous waste sites, at petroleum contamination sites, or at underground storage tank removal projects.

b. Documented experience in supervising professional and technician level personnel.

c. Documented experience in developing worker exposure assessment programs and air monitoring programs and techniques.

d. Documented experience in the development of personal protective equipment programs, including programs for working in and around potentially toxic, flammable and combustible atmospheres and confined spaces.

e. Working knowledge of state and Federal occupational safety and health regulations.

2). The Safety and Health Manager shall:

a. Be responsible for the development, implementation, oversight, and enforcement of the SSHP.

b. Sign and date the SSHP prior to submittal.

c. Visit the site once at the startup of activities and as needed for the duration of activities, to audit the effectiveness of the SSHP.
d. Be available for emergencies.
e. Provide onsite consultation as needed to ensure the SSHP is fully implemented.
f. Coordinate any modifications to the SSHP with the Site Superintendent, the SSHO, and the Contracting Officer.
g. Provide continued support for upgrading/downgrading of the level of personal protection.
h. Be responsible for evaluating air monitoring data and recommending changes to engineering controls, work practices, and PPE.
i. Review accident reports and results of daily inspections.
j. Serve as a member of the Contractor's quality control staff.

1.10.2 Site Safety and Health Officer

An individual and one alternate shall be designated the Site Safety and Health Officer (SSHO). The name, qualifications (education and training summary and documentation), and work experience of the Site Safety and Health Officer and alternate shall be included in the SSHP.

1). The SSHO shall have the following qualifications:

a. A minimum of 2 years experience in implementing safety and health programs at hazardous waste sites, at petroleum contamination sites, or at underground storage tank removal projects where Level C personal protective equipment was required.

b. Documented experience in construction techniques and construction safety procedures.

c. Working knowledge of Federal and state occupational safety and health regulations.

d. Specific training in personal and respiratory protective equipment program implementation, confined space program oversight, and in the proper use of air monitoring instruments, and air sampling methods.

2). The Site Safety and Health Officer shall:

a. Assist and represent the Safety and Health Manager in onsite training and the day to day onsite implementation and enforcement of the accepted SSHP.

b. Be assigned to the site on a full time basis for the duration of field activities involving potential exposure to contaminated soil. If operations are performed during more than 1 work shift per day, a site Safety and Health Officer shall be present for each shift.

c. Have authority to ensure site compliance with specified safety and health requirements, Federal, state and OSHA regulations and all aspects of the SSHP including, but not limited to, activity hazard analyses, air monitoring, use of PPE, decontamination, site control, standard operating procedures used to minimize hazards, safe use of engineering controls, the emergency response plan, confined space entry procedures, spill containment program, and preparation of records by performing a daily safety and health inspection and documenting results on the Daily Safety Inspection Log in accordance with 29 CFR 1904.

d. Have authority to stop work if unacceptable health or safety conditions exist, and take necessary action to re-establish and maintain safe working conditions.

e. Consult with and coordinate any modifications to the SSHP with the Safety and Health Manager, the Site Superintendent, and the Contracting Officer.

f. Serve as a member of the Contractor's quality control staff on matters relating to safety and health.

g. Conduct accident investigations and prepare accident reports.

h. Review results of daily quality control inspections and document safety and health findings into the Daily Safety Inspection Log.

i. In coordination with site management and the Safety and Health Manager, recommend corrective actions for identified deficiencies and oversee the corrective actions.

### 1.10.3 Persons Certified in First Aid and CPR

At least two persons who are currently certified in first aid and CPR by the American Red Cross or other approved agency shall be onsite at all times during site operations. They shall be trained in universal precautions and the use of PPE as described in the Bloodborne Pathogens Standard of 29 CFR 1910, Section .1030. These persons may perform other duties but shall be immediately available to render first aid when needed.

## 1.11 TRAINING

The Contractor's training program for workers performing cleanup operations and who will be exposed to contaminants shall meet the following requirements.

### 1.11.1 General Hazardous Waste Operations Training

All Personnel performing duties with potential for exposure to on-site contaminants shall meet and maintain the following 29 CFR 1910.120/29 CFR 1926.65 (e) training requirements:

a. 40 hours of off site hazardous waste instruction.

b. 3 days actual field experience under the direct supervision of a trained, experienced supervisor.

c. 8 hours refresher training annually.

Onsite supervisors shall have an additional 8 hours management and supervisor training specified in 29 CFR 1910.120/29 CFR 1926.65 (e) (4).

### 1.11.2 Initial Session (Pre-entry Briefing)

Prior to commencement of onsite field activities, all site employees, including those assigned only to the Support Zone, shall attend a site-specific safety and health training session. This session shall be conducted to ensure that all personnel are familiar with requirements and responsibilities for maintaining a safe and healthful work environment. Procedures and contents of the accepted SSHP and Sections 01.B.02 and 28.D.03 of EM 385-1-1 shall be thoroughly discussed. The Contracting Officer shall be notified at least 5 days prior to the initial site-specific training session so government personnel involved in the project may attend.

### 1.11.3 Periodic Sessions

Periodic onsite training shall be conducted by the SSHO at least weekly for personnel assigned to work at the site during the following week and whenever site conditions, work procedures, or site personnel change. The training shall address safety and health procedures, work practices, any changes in the SSHP, activity hazard analyses, work tasks, or schedule; results of previous week's air monitoring, review of safety discrepancies and accidents. Should an operational change affecting onsite field work be made, a meeting prior to implementation of the change shall be convened to explain safety and health procedures. Site-specific training sessions for

new personnel, visitors, and suppliers shall be conducted by the SSHO using the training curriculum outlines developed by the Safety and Health Manager.

## 1.12 PERSONAL PROTECTIVE EQUIPMENT

### 1.12.1 Site Specific PPE Program

Onsite personnel exposed to contaminants shall be provided with appropriate personal protective equipment. Components of levels of protection (B, C, D and modifications) must be relevant to site-specific conditions, including heat and cold stress potential and safety hazards. Only respirators approved by NIOSH shall be used. Protective equipment and clothing shall be kept clean and well maintained. The PPE section of the SSHP shall include site-specific procedures to determine PPE program effectiveness and for onsite fit-testing of respirators, cleaning, maintenance, inspection, and storage of PPE.

### 1.12.2 Levels of Protection

The Safety and Health Manager shall establish and evaluate as the work progresses the levels of protection for each work activity. The Safety and Health Manager shall also establish action levels for upgrade or downgrade in levels of PPE. Protocols and the communication network for changing the level of protection shall be described in the SSHP. The PPE evaluation protocol shall address air monitoring results, potential for exposure, changes in site conditions, work phases, job tasks, weather, temperature

extremes, individual medical considerations, etc.

1.12.2.1 Initial PPE Components

The following items constitute minimum protective clothing and equipment ensembles to be utilized during this project:

Level D.

Appropriate work clothing
Steel-toed work boots
Hearing protection (if necessary)
Hard hat
Gloves appropriate to protect against task-specific hazards.

Modified Level D.

Appropriate work clothing
Steel-toed work boots
Hearing protection (if necessary)
Gloves appropriate to protect against task-specific chemical and physical hazards
Regular or coated disposable coveralls with hoods and elastic wrists and ankles.

Level C.

Air-purifying respirator with organic vapor or OV/combination cartridges
Hard hat
Regular or coated disposable coveralls with hoods and elastic wrists and ankles
Gloves appropriate to protect against tas-specific chemical and physical hazards
Steel-toed work boots with disposable boot covers
Hearing protection (if necessary)

1.12.3 PPE for Government Personnel

Three clean sets of personal protective equipment and clothing (excluding air-purifying negative-pressure respirators and safety shoes, which will be provided by individual visitors), as required for entry into the Exclusion Zone and/or Contamination Reduction Zone, shall be available for use by the Contracting Officer or official visitors. The items shall be cleaned and maintained by the Contractor and stored in a clean area and clearly marked: "FOR USE BY GOVERNMENT ONLY." The Contractor shall provide basic training in the use and limitations of the PPE provided.

1.13 MEDICAL SURVEILLANCE PROGRAM

The Contractor's medical surveillance program for workers performing cleanup operations and who will be exposed to contaminants shall meet 29 CFR 1910.120/1926.65 (f). The Contractor shall assure the Occupational Physician or the physician's designee performs the physical examinations and reviews examination results. Participation in the medical surveillance program shall be without cost to the employee, without loss of pay and at a reasonable time and place.

1.14 EXPOSURE MONITORING/AIR SAMPLING PROGRAM

The Safety and Health Manager shall prepare and implement an exposure monitoring/air sampling program to identify and quantify safety and health hazards and airborne levels of hazardous substances in order to assure proper selection of engineering controls, work practices and personal protective equipment for affected site personnel. The exposure monitoring program shall be submitted for approval as part of the Site Safety and Health Plan.

## 1.15 HEAT STRESS MANAGEMENT

The Contractor shall establish a heat stress management program and implement it when the ambient temperature exceeds 70 Degrees F. The heat stress management program shall consist of the following procedures and practices.

### 1.15.1 Physiological Monitoring

The Contractor shall train or otherwise assure workers heart rates and body core temperatures are monitored and assure that threshold levels in Table 4 of ACGIH Limit Values are not exceeded.

### 1.15.2 ACGIH General Controls for Heat Stress

The Contractor shall implement general heat stress control procedures in Table 5 of ACGIH Limit Values as part of his heat stress management program.

1.15.3 ACGIH Job Specific Controls for Heat Stress

The Contractor shall implement job specific heat stress controls in Table 5 of ACGIH Limit Values when site specific conditions warrant.

1.16 SPILL AND DISCHARGE CONTROL

Written spill and discharge containment/control procedures shall be developed and implemented. These procedures shall address material handling equipment, and appropriate procedures for shipping and transport. These procedures shall describe prevention measures, such as building berms or dikes; spill control measures and material to be used (e.g. booms, vermiculite); location of the spill control material; personal protective equipment required to cleanup spills; disposal of contaminated material; and who is responsible to report the spill. Storage of contaminated material or hazardous materials shall be appropriately bermed, diked and/or contained to prevent any spillage of material on uncontaminated soil. If the spill or discharge is reportable, and/or human health or the environment are threatened, the National Response Center, the state, and the Contracting Officer shall be notified as soon as possible.

1.17 CONFINED SPACE ENTRY PROCEDURES

The Site Safety and Health Plan shall indicate whether confined space entry is anticipated. If confined space entry is required, comply with the provisions of 29 CFR 1910.146.

1.18 FIRE PROTECTION AND PREVENTION

Comply with applicable provisions of 29 CFR 1926 Subpart F.

1.19 ELECTRICAL SAFETY

If temporary electrical power is used for this project, it shall conform to the National Electrical Code, the National Electrical Safety Code, and EM 385-1-1. Motorized evehicles to be used on this project shall conform to EM 385-1-1. Air monitoring and sampling equipment shall be rated intrinsically safe. All portable electrical equipment shall be protected by Ground Fault Circuit Interrupters (GFCI). Clearances to adjacent overhead transmission and distribution electrical lines shall be sufficient for the movement of vehicles and operation of construction equipment.

1.20 EXCAVATION AND TRENCH SAFETY

The Contractor shall comply with the requirements of 29 CFR 1926.650-652 when workers are exposed to the potential of excavation cave-ins. The designated competent person shall determine the excavation to be safe prior to worker entrance.

1.21 GUARDING OF MACHINERY AND EQUIPMENT

Where applicable, comply with the requirements of EM 385-1-1, Section 16.

1.22 LOCKOUT/TAGOUT

The Contractor shall comply with all applicable requirements of 29 CFR 1910.147, 29 CFR 1910.301-305, and EM 385-1-1, Section 12, at a minimum.

1.23 FALL PROTECTION

The Contractor shall comply with all applicable requirements of 29 CFR 1926.500-503.

## 1.24 HAZARD COMMUNICATION

A hazard communication program shall be established and implemented in accordance with 29 CFR 1926.59. This shall include the development of a written Hazard Communication Plan which shall be included as part of the SSHP and kept on site, as required by 29 CFR 1926.59(e)(1).

## 1.25 ILLUMINATION

The Contractor shall comply with the requirements of 29 CFR 1926.26.

## 1.26 SANITATION

a. Washing Facilities. The Contractor shall provide washing facilities in the support zone consisting of water, towels, and soap for men and women as necessary (see also paragraph: PERSONAL HYGIENE AND DECONTAMINATION of this section).

b. Potable Water. The Contractor shall provide potable water in the support zone work areas and shall:

Clearly mark containers of potable water;
Ensure potable water containers are not used for any other purposes;
Mark nonpotable water outlets as unsafe for drinking;
Keep drinking cups in sanitary receptacles;
Provide disposal receptacles if disposable cups are provided; and
Ensure there are no cross-connections between potable and nonpotable supplies.

## 1.27 ENGINEERING CONTROLS

The Contractor shall implement feasible engineering and work practice controls to reduce and maintain employee exposure at or below the OSHA PELs and ACGIH TLVs (the more restrictive shall apply) for hazardous substances that may be encountered.

## 1.28 SIGNS AND LABELS

Before site operations begin, mark the perimeter with warning tape or other visual means. Post warning signs around the perimeter and at the entrance road or path and also post signs directing visitors to the authorized entrance.

## 1.29 WASTE DISPOSAL

Waste shall be handled, transported, and disposed in accordance with all Federal, state, and local regulations. Provide detailed information regarding waste disposal procedures in the SSHP.

## 1.30 1.30 SITE CONTROL MEASURES

### 1.30.1 Work Zones

Work zone boundaries (exclusion zone, including restricted and regulated areas; contamination reduction zone; and support zone) and access points shall be established and the boundary delineations shall be included in the SSHP. Delineation of work zone boundaries shall be based on the contamination characterization data and the hazard/risk analysis to be performed as described in paragraph: HAZARD/RISK ANALYSIS. As work progresses and field conditions are monitored, work zone boundaries may be modified with approval of the Contracting Officer. Work zones shall be clearly identified and marked in the field (using fences, tape, signs, etc.). A site map, showing work zone boundaries and locations of decontamination facilities, shall be posted in the onsite office. Work zones shall consist of the following:

a. Exclusion Zone (EZ): The exclusion zone is the area where hazardous contamination is either known or expected to occur and the greatest potential for exposure exists. Entry into this area shall be controlled and exit may only be made through the CRZ.

b. Contamination Reduction Zone (CRZ): The CRZ is the transition area between the Exclusion Zone and the Support Zone. The personnel and equipment decontamination areas shall be separate and unique areas located in the CRZ.

c. Support Zone (SZ): The Support Zone is defined as areas of the site, other than exclusion zones and contamination reduction zones, where workers do not have the potential to be exposed to hazardous substances or dangerous conditions resulting from hazardous waste operations. The Support Zone shall be secured against active or passive contamination. Site offices, parking areas, and other support facilities shall be located in the Support Zone.

### 1.30.2 Site Control Log

A log of personnel visiting, entering, or working on the site shall be maintained. The log shall include the following: date, name, agency or company, time entering and exiting site, time entering and exiting the exclusion zone (if applicable), and personal protective equipment utilized. Before visitors are allowed to enter the Contamination Reduction Zone or Exclusion Zone, they shall show proof of current training, medical surveillance and respirator fit testing (if respirators are required for the tasks to be performed) and shall fill out the Certificate of Worker or Visitor Acknowledgment. This visitor information, including date, shall be recorded in the log.

### 1.30.3 Communication

An employee alarm system that has adequate means of on and off site communication shall be provided and installed in accordance with 29 CFR 1910 Section .165. The means of communication shall be able to be perceived above ambient noise or light levels by employees in the affected portions of the workplace. The signals shall be distinctive and recognizable as messages to evacuate or to perform critical operations.

### 1.30.4 Site Security

Signs shall be printed in bold large letters on contrasting backgrounds in English and/or where appropriate, in the predominant language of workers unable to read English. Signs shall be visible from all points where entry might occur and at such distances from the restricted area that employees may read the signs and take necessary protective steps before entering. Ensure employees use designated access points for movement of personnel and equipment between zones and on and off site. Restrict site access to Government-authorized or Contractor certified personnel.

## 1.31 PERSONAL HYGIENE AND DECONTAMINATION

Personnel entering the Exclusion or Contamination Reduction Zones or otherwise exposed or subject to exposure to hazardous chemical vapors, liquids, or contaminated solids shall adhere to the following personal hygiene and decontamination provisions. Decontamination shall be performed in the CRZ prior to entering the Support Zone from the Exclusion Zone. Chapter 10.0 of NIOSH 85-115 shall be consulted when preparing decontamination procedures. A detailed discussion of personal hygiene and decontamination facilities and procedures to be followed by site workers shall be submitted as part of the SSHP. Employees shall be trained in the procedures and the procedures shall be enforced throughout site operations. Persons disregarding these provisions of the SSHP shall be barred from the site.

### 1.31.1 Decontamination Facilities

The Contractor shall initially set up a decontamination line in the CRZ. Employees shall exit the exclusion zone through the CRZ and shall implement decontamination procedures and techniques as outlined in the approved SSHP. It is the site safety and health officer's responsibility to recommend techniqes to improve personnel decontamination techniques and procedures, if necessary.

### 1.31.2 Equipment Decontamination

Vehicles and equipment used in the EZ shall be decontaminated in the CRZ prior to leaving the site.

#### 1.31.2.1 Decontamination Facilities

A vehicle decontamination station shall be provided within the CRZ for decontaminating vehicles and equipment leaving the EZ. The decontamination station components shall be proposed in the Contractor's SSHP. Include information concerning the surface to be used to protect the ground from contamination, any collection system for decontamination water, and methods to be used to decontaminate the equipment. A designated "clean area" shall also be identified in the CRZ for performing equipment maintenance. This area shall be used when personnel are required by normal practices to come in contact with the ground, i.e., crawling under a vehicle to change engine oil. Equipment within the EZ or CRZ shall be decontaminated before maintenance is performed.

1.31.2.2 Procedures

Procedures for equipment decontamination shall be developed and utilized to prevent the spread of contamination into the SZ and offsite areas. These procedures shall address disposal of contaminated products and spent materials used on the site, including containers, fluids, oils, etc. Any item taken into the EZ shall be assumed to be contaminated and shall be inspected and/or decontaminated before the item leaves the area. Vehicles, equipment, and materials shall be cleaned and decontaminated prior to leaving the site. Construction material shall be handled in such a way as to minimize the potential for contaminants being spread and/or carried offsite. Prior to exiting the site, vehicles and equipment shall be monitored to ensure the adequacy of decontamination.

1.32 EMERGENCY EQUIPMENT AND FIRST AID REQUIREMENTS

The following items, as a minimum, shall be maintained onsite and available for immediate use:

a. First aid equipment and supplies approved by the consulting physician.

b. Emergency eyewashes and showers which comply with ANSI Z358.1.

c. Emergency-use respirators.

d. Fire extinguishers with a minimum rating of 20-A:120-B:C shall be provided at site facilities and in all vehicles and at any other site locations where flammable or combustible materials present a fire risk.

1.33 EMERGENCY RESPONSE AND CONTINGENCY PROCEDURES

An Emergency Response Plan, that meets the requirements of 29 CFR 1910 Section .120 (l) and 29 CFR 1926 Section .65 (l), shall be developed and implemented as a section of the SSHP. In the event of any emergency associated with remedial action, the Contractor shall, without delay, alert all onsite employees that there is an emergency situation; take action to remove or otherwise minimize the cause of the emergency; alert the Contracting Officer; and institute measures necessary to prevent repetition of the conditions or actions leading to, or resulting in, the emergency. Employees that are required to respond to hazardous emergency situations shall be trained in how to respond to such expected emergencies. The plan shall be rehearsed regularly as part of the overall training program for site operations. The plan shall be reviewed periodically and revised as necessary to reflect new or changing site conditions or information. Copies of the accepted SSHP and revisions shall be provided to the affected local emergency response agencies. The following elements, as a minimum, shall be addressed in the plan:

a. Pre-emergency planning. Contact the local emergency response planner during preparation of the Emergency Response Plan. The contractor shall arrange to have fire, rescue, medical and police security services provided by local emergency responders. The Contractor shall ensure the Emergency Response Plan for the site is compatible and integrated with the local fire, rescue, medical and police security services available from local emergency response planning agencies.

b. Personnel roles, lines of authority, communications for emergencies.

c. Emergency recognition and prevention.

d. Site topography, layout, and prevailing weather conditions.

e. Criteria and procedures for site evacuation (emergency alerting procedures, employee alarm system, emergency PPE and equipment, safe distances, places of refuge, evacuation routes, site security and control).

f. Specific procedures for decontamination and medical treatment of injured personnel.

g. Route maps to nearest prenotified medical facility. Site-support vehicles shall be equipped with maps. At the beginning of project operations, drivers of the support vehicles shall become familiar with the emergency route and the travel time required.

h. Emergency alerting and response procedures including posted instructions and a list of names and telephone numbers of emergency contacts (physician, nearby medical facility, fire and police departments, ambulance service, Federal, state, and local environmental agencies; as well as Safety and Health Manager, the Site Superintendent, the Contracting Officer and/or their alternates).

i. Criteria for initiating community alert program, contacts, and responsibilities.

j. Procedures for reporting incidents to appropriate government agencies. In the event that an incident such as an explosion or fire, or a spill or release of toxic materials occurs during the course of the project, the appropriate government agencies shall be immediately notified. In addition, the Contracting Officer shall be verbally notified immediately and receive a written notification within 24 hours. The report shall include the following items:

(1) Name, organization, telephone number, and location of the Contractor.

(2) Name and title of the person(s) reporting.

(3) Date and time of the incident.

(4) Location of the incident, i.e., site location, facility name.

(5) Brief summary of the incident giving pertinent details including type of operation ongoing at the time of the incident.

(6) Cause of the incident, if known.

(7) Casualties (fatalities, disabling injuries).

(8) Details of any existing chemical hazard or contamination.

(9) Estimated property damage, if applicable.

(10) Nature of damage, effect on contract schedule.

(11) Action taken to ensure safety and security.

(12) Other damage or injuries sustained, public or private.

k. Procedures for critique of emergency responses and follow-up.

1.34 CERTIFICATE OF WORKER/VISITOR ACKNOWLEDGEMENT

A copy of a Contractor-generated certificate of worker/visitor acknowledgement shall be completed and submitted for each visitor allowed to enter contamination reduction or exclusion zones, and for each employee.

1.35 INSPECTIONS

The SSHO's Daily Inspection Logs shall be attached to and submitted with the Daily Quality Control reports. Each entry shall include the following: date, work area checked, employees present in work area, PPE and work equipment being used in each area, special safety and health issues and notes, and signature of preparer. In the event of an accident, the Contracting Officer shall be notified according to EM 385-1-1. Within 2 working days of any reportable accident, an Accident Report shall be completed on ENG Form 3394 and submitted.

1.36 SAFETY AND HEALTH PHASE-OUT REPORT

A Safety and Health Phase-Out Report shall be submitted within 10 working days following completion of the work, prior to final acceptance of the work. The following minimum information shall be included:

a. Summary of the overall performance of safety and health (accidents or incidents including near misses, unusual events, lessons learned, etc.).

b. Final decontamination documentation including procedures and techniques used to decontaminate equipment, vehicles, and on site facilities.

c. Summary of exposure monitoring and air sampling accomplished during the project.

d. Signatures of Safety and Health Manager and SSHO.

PART 2 PRODUCTS (Not Applicable)

PART 3 EXECUTION (Not Applicable)

-- End of Section --

# FINAL

# REPORT

# CONTAMINANT INVESTIGATION

# HYDRANT FUEL SYSTEM
# LANGLEY AIR FORCE BASE

## Hampton, Virginia

*Prepared by*

**U.S. ARMY CORPS OF ENGINEERS**
***OMAHA DISTRICT***

*July 2004*

## TABLE OF CONTENTS

**LIST OF TABLES** ..... iii
**LIST OF FIGURES** ..... iii
**LIST OF APPENDICES** ..... iii

**1. BACKGROUND** ..... 1
1.1 OBJECTIVE ..... 1
1.2 INVESTIGATION LOCATION ..... 1

**2. FIELD INVESTIGATION SUMMARY** ..... 1

**3. DESCRIPTION OF INVESTIGATION** ..... 2
3.1 PAVEMENT CORING ..... 2
3.2 DRILLING AND SOIL SAMPLING PROCEDURES ..... 2
3.3 HEADSPACE SCREENING PROCEDURES ..... 3
3.4 GROUNDWATER SAMPLING PROCEDURES ..... 3
3.5 SITE CONDITIONS ..... 4
3.5.1 Significant Environmental Observations ..... 4
3.5.2 Site Geology ..... 6
3.5.3 Groundwater ..... 6
3.6 DECONTAMINATION ..... 7
3.7 BOREHOLE CLOSURE ..... 7

**4. PACKAGING AND SHIPMENT** ..... 7

**5. PROTECTION LEVEL** ..... 7

## LIST OF TABLES


| | |
|---|---|
| Table 1 | Soil Analytical Data |
| Table 2 | Groundwater Analytical Data |
| Table 3 | Depths to Groundwater Upon Completion of Drilling |


## LIST OF FIGURES


| | |
|---|---|
| Figure 1 | Site Plan Area – 1 |
| Figure 2 | Site Plan Area – 2 |
| Figure 3 | Site Plan Area – 3 |
| Figure 4 | Site Plan Area – 4 |
| Figure 5 | Site Plan Area – 5 |
| Figure 6 | Site Plan Area – 6 |
| Figure 7 | Site Plan Area – 3 (Suspected Contamination Boundaries) |
| Figure 8 | Site Plan Area – 5 (Suspected Contamination Boundaries) |
| Figure 9 | Site Plan Area – 7 (Suspected Contamination Boundaries) |


## LIST OF APPENDICES


| | |
|---|---|
| Appendix A | Drilling Logs |
| Appendix B | Chain of Custody Records |
| Appendix C | Chemical Quality Assurance Report |

## 1. BACKGROUND

Design work for the new hydrant fuel system at Langley Air Force Base (AFB) is being performed by Argus Consulting, Inc. of Blue Springs, Missouri. As part of the design effort, the US Army Corps of Engineers (USACE), Omaha District was tasked with environmental sampling and analysis of soils and groundwater in the vicinity of the proposed new fueling system to determine if contamination is present in sufficient quantities to significantly impact project construction. Omaha District was also tasked with collecting soil samples for supplemental geotechnical testing in order for the design of the hydrant fuel system to be completed. The results of the supplemental geotechnical testing will be documented in a separate report.

Several contaminant releases to the environment have occurred at Langley AFB as a result of landfill uses, discharges to wastewater systems, fire training activities, and accidental spills and leaks. Subsurface plumes containing fuels and solvents such as trichloroethylene are known to exist in the area groundwater.

### 1.1 Objective

The main objective of this site investigation was to determine if suspected petroleum hydrocarbon and Volatile Organic Compound (VOC) contamination exists in sub-surface soils and groundwater underlying the proposed project boundaries which may necessitate special soil excavating or groundwater dewatering (for worker health and safety) and handling/disposal procedures during construction.

### 1.2 Investigation Location

The field investigation described in this report was conducted along the proposed alignment of the new hydrant fuel system. Refer to Figures 1 through 6 for site maps showing the proposed alignment.

## 2. FIELD INVESTIGATION SUMMARY

An Omaha District drill crew conducted the contamination investigation for the proposed hydrant fuel system at Langley AFB on 24 April to 5 May 2004. The investigation consisted of 30 direct push soil sampling borings, numbered sequentially LAFBHF-01 through LAFBHF-30. The original investigation also called for the collection of groundwater samples from temporary monitoring wells installed in five of the completed soil borings. Two additional groundwater sampling locations (for a total of seven) were added due to signs of possible fuel contamination in soils. Temporary monitoring wells were located in the following soil borings: LAFBHF-01, 03, -05, -10, -21, -29, and -30. Soil samples for the supplemental geotechnical testing were obtained from the following borings: LAFBHF-01, -03, -05, -09, -12, -14, -17, -19, -24, and -26. The locations of all soil borings and temporary monitoring wells are provided in Figures 1 through 6.

Sub-surface soil samples were collected for lithologic logging, headspace screening, and environmental/geotechnical laboratory analysis (with the exception of samples for modified proctor density testing) using a SIMCO EARTHPROBE™ 200 direct-push rig equipped with either a 2-inch or 1-inch nominal diameter by 3-foot long steel split-spoon sampler. Soil samples

for the proctor density tests were collected using a 5-inch diameter by 30-inch long Shelby tube with the direct-push rig.

Sampling locations were selected for placement over the project site based on the planned layout of the proposed hydrant fuel system. These borehole locations were marked in the field using spray paint to assist in underground utility location work. A Langley AFB digging permit was obtained prior to conducting fieldwork.

Collected soil and groundwater samples were analyzed for VOCs by Method SW 846 5030B/8260B, Gasoline Range Organics (GRO) by 5030B/8015B, and Diesel Range Organics (DRO) by Method 3550A/8015B. All environmental samples were analyzed by the USACE Environmental Chemistry Branch Laboratory in Omaha, Nebraska.

Geotechnical testing of soils included visual classification, grain-size distribution, Atterberg limits, modified proctor density, specific gravity, sulfate ion content, soil resistivity, and soil pH. All geotechnical samples were analyzed by Terracon in Omaha, Nebraska.

## 3. DESCRIPTION OF INVESTIGATION

### 3.1 Pavement Coring

Pavement coring was performed using a Milwaukee, 20-amp, rotary drill equipped with a 2-inch nominal diameter diamond core barrel.

### 3.2 Drilling and Soil Sampling Procedures

Each boring was continuously sampled for lithologic logging purposes by advancing a split-spoon sampler in an open borehole down to a pre-determined depth. Prior to collecting a sample at each interval, the split-spoon samplers were cleaned as described in Section 3.6 - "Decontamination" to eliminate any possible cross contamination. After the split-spoon sampler was retrieved, it was opened and immediately scanned by sight, smell, and with a photo-ionization detector (PID) for signs of possible fuel contamination. A representative sample of the subsurface material was taken from each sample interval for headspace measurements.

One soil sample was retained from each boring and submitted to a laboratory for chemical analysis. Each of these soil samples consisted of one 4-ounce jar for VOC and GRO (including napththalene), and one 4-ounce jar for DRO analysis. All samples for chemical analysis were collected from the interval immediately at or above the water table. The sequence of sampling proceeded from the sample for VOC and GRO analysis first, headspace sample second, and the sample for DRO analysis last. All environmental samples were immediately placed on ice and subsequently shipped via overnight delivery to the lab.

Geotechnical samples were collected from intervals below the water table, at or near the proposed invert of the hydrant fuel system. Soil samples for all geotechnical analysis with the exception of the proctor density test consisted of two pint-jar samples. Soil samples for the proctor density tests consisted of one to two 5-gallon buckets. All jars and buckets were sealed airtight with electrical or duct tape, and were driven back to Omaha, Nebraska following the completion of all field activities to be delivered to the laboratory.

### 3.3 Headspace Screening Procedures

Soil samples were screened for VOCs in the field at the time of sample collection. Field screening was performed using an HNu HW-101 PID. The field screening was performed in accordance with the following procedures.

- Immediately upon opening the split-spoon and after collecting the sample for VOC and GRO analysis (when required), a representative portion of the sample was collected and placed in a new, clean, plastic sandwich bag placed inside a jar. Readings were periodically taken inside empty bags to ensure no external contamination was being introduced.
- The jar was then sealed with at least one continuous sheet of aluminum foil, using the jar lid to secure the foil.
- The jar was then vigorously agitated for at least fifteen seconds and then allowed a minimum of ten minutes for the sample to adequately volatilize.
- After re-shaking the jar, the lid was removed and the vapor sampling probe was quickly inserted through the aluminum foil. The maximum meter response (within first two to five seconds) was recorded.
- The headspace screening data was recorded on the Drilling Log.
- The screening instrument was calibrated using 100 ppm isobutylene span gas at the start of each workday and periodically throughout the day as determined appropriate by the geologist in the field.

### 3.4 Groundwater Sampling Procedures

Temporary monitoring wells were installed in seven of the completed soil borings immediately after the soil sampling was completed. All temporary monitoring wells were constructed using ¾-inch nominal diameter PVC riser and screen. Screen lengths were 5 feet, with a 0.10-inch factory slot. A 20-40 gradation filter pack was installed from the bottom of the boring to within 1-foot of the ground surface. No bentonite seals were installed above the filter pack as these wells were sampled immediately upon installation, and abandoned upon completion of the groundwater sampling.

A peristaltic pump with disposable polyethylene tubing was used to purge each temporary monitoring well. A short (approximately 1-foot) section of silicone tubing was used for the pump head. This tubing was also replaced prior to sampling at each well. Purge volumes ranged from 1.25 to 3 liters.

Each groundwater sample consisted of three 40-ml vials for VOC and GRO analysis, and two 1-liter amber bottles for the DRO analysis. The sample for DRO was collected first using the peristaltic pump. Disposable stainless-steel bailers were used to collect the samples for VOC and GRO analysis. All groundwater samples were immediately placed on ice and subsequently shipped via overnight delivery to the lab.

## 3.5 Site Conditions

### 3.5.1 Significant Environmental Observations

Boring numbers, bottom depth of sample interval, headspace results, and a summary of the soil analytical results are shown in Table 1. The borehole locations are shown in Figures 1 through 6. Drilling Logs are included as Appendix A. Chain of custody information is included as Appendix B. The Chemical Quality Assurance Report for the soil analyses is included as Appendix C.

Soil analytical data, as shown in Table 1, indicates two separate areas of soil contamination along the proposed hydrant fuel system. The analytical data indicates minor VOC contamination in soil boring LAFBHF-01, which is located southwest and adjacent to the large aboveground fuel tanks also known as Environmental Restoration Program (ERP) Site ST-34. Headspace readings from this boring were not significantly elevated, which is consistent with the laboratory results.

The second area of soil contamination occurs within the West Apron, which is part of ERP Site ST-26. Laboratory analytical data indicates VOC contamination in soil borings LAFBHF-20, -21, -24, -25, -26, -27, and -30. Of the seven soil borings where analytical data indicated VOC contamination, headspace readings were significantly elevated in all but two (LAFBHF-21 and –24). There was an insufficient amount of sample to obtain a headspace reading for soil boring LAFBHF-26.

The lab results suggest that soil contamination along the proposed alignment of the hydrant fuel system is localized and does not appear to be widespread throughout the project area.

**TABLE 1 – Soil Analytical Data**

| Boring No. | Depth[1] (ft) | Headspace Results (ppm) | Benzene (ug/kg) | Toluene (ug/kg) | Ethyl-Benzene (ug/kg) | Xylenes (ug/kg) | GRO (mg/kg) | DRO (mg/kg) |
|---|---|---|---|---|---|---|---|---|
| LAFBHF-01 | 4 | 3 | ND[2] | ND | ND | ND | 0.56 | ND |
| LAFBHF-02 | 4 | 4 | ND | ND | ND | ND | ND | ND |
| LAFBHF-03 | 4 | 3 | ND | ND | ND | ND | ND | ND |
| LAFBHF-04 | 4 | 3 | ND | ND | ND | ND | ND | ND |
| LAFBHF-05 | 4 | 6 | ND | ND | ND | ND | ND | ND |
| LAFBHF-06 | 4 | 8 | ND | ND | ND | ND | ND | ND |
| LAFBHF-07 | 4 | 6 | ND | ND | ND | ND | ND | ND |
| LAFBHF-08 | 4 | 6 | ND | ND | ND | ND | ND | ND |
| LAFBHF-09 | 4 | <1 | ND | ND | ND | ND | ND | ND |
| LAFBHF-10 | 4 | 6 | ND | ND | ND | ND | ND | ND |
| LAFBHF-11 | 4 | <1 | ND | ND | ND | ND | ND | ND |
| LAFBHF-12 | 4 | <1 | ND | ND | ND | ND | ND | ND |
| LAFBHF-13 | 4 | <1 | ND | ND | ND | ND | ND | ND |
| LAFBHF-14 | 4 | 2 | ND | ND | ND | ND | ND | ND |
| LAFBHF-15 | 4 | <1 | ND | ND | ND | ND | ND | ND |
| LAFBHF-16 | 4 | 5 | ND | ND | ND | ND | ND | ND |
| LAFBHF-17 | 4 | 5 | ND | ND | ND | ND | ND | ND |
| LAFBHF-18 | 4 | 5 | ND | ND | ND | ND | ND | ND |

## TABLE 1 – Soil Analytical Data (continued)

| Boring No. | Depth[1] (ft) | Headspace Results (ppm) | Benzene (ug/kg) | Toluene (ug/kg) | Ethyl-Benzene (ug/kg) | Xylenes (ug/kg) | GRO (mg/kg) | DRO (mg/kg) |
|---|---|---|---|---|---|---|---|---|
| LAFBHF-19 | 4 | 3 | ND | ND | ND | ND | ND | ND |
| LAFBHF-20 | 4.5 | 20 | ND | ND | ND | ND | 2.6 | ND |
| LAFBHF-21 | 4. | 5 | ND | ND | 2.7 | 6.4 | 0.21 | ND |
| LAFBHF-22 | 4.5 | 4 | ND | ND | ND | ND | ND | ND |
| LAFBHF-23 | 4.5 | N/A[3] | ND | ND | ND | ND | ND | ND |
| LAFBHF-24 | 4.5 | 5 | ND | 4.2 | ND | 1.2 | 0.14 | ND |
| LAFBHF-25 | 5 | 14 | ND | ND | ND | ND | 53 | 76 |
| LAFBHF-26 | 5.5 | N/A | ND | ND | ND | ND | 22 | ND |
| LAFBHF-27 | 4 | 60 | ND | ND | ND | ND | ND | 160 |
| LAFBHF-28 | 4 | 5 | ND | ND | ND | ND | ND | ND |
| LAFBHF-29 | 4 | 5 | ND | ND | ND | ND | ND | ND |
| LAFBHF-30 | 4 | 30 | ND | ND | ND | ND | 12 | 1100 |

[1]Bottom depth of sample interval
[2]Not Detected
[3]Not Available

Monitoring well numbers and a summary of the groundwater analytical results are shown in Table 2. The locations of the monitoring wells may also be found in Figures 1 through 6. Chain of custody information can be viewed in Appendix B.

Groundwater analytical data, as shown in Table 2, indicates two separate areas of groundwater contamination along the proposed hydrant fuel alignment. The analytical data indicates VOC contamination in monitoring well MW-10 (completed in soil boring LAFBHF-10) in an area not associated with any ERP sites.

The second area of groundwater contamination occurs within the West Apron and ERP Site ST-26. Laboratory analytical data indicates VOC contamination in groundwater samples from monitoring wells MW-21 and MW-30 (completed in soil borings LAFBHF-21 and LAFBHF-30, respectively). The lab results suggest that groundwater contamination along the proposed alignment of the hydrant fuel system is also localized and does not appear to be widespread throughout the project area.

## TABLE 2 – Groundwater Analytical Data

| Monitoring Well No. | Benzene (ug/L) | Toluene (ug/L) | Ethyl-Benzene (ug/L) | Xylenes (ug/L) | GRO (ug/L) | DRO (ug/L) |
|---|---|---|---|---|---|---|
| MW-01 | ND[1] | ND | ND | ND | ND | ND |
| MW-03 | ND | ND | ND | ND | ND | ND |
| MW-05 | ND | ND | ND | ND | ND | ND |
| MW-10 | ND | ND | 3.8 | ND | 430 | 57,000 |
| MW-21 | ND | ND | 1.3 | ND | 1,820 | 18,000 |
| MW-29 | ND | ND | ND | ND | ND | ND |
| MW-30 | 1 | ND | 1.3 | 0.6 | 1,300 | 17,000 |

[1]Not Detected

Three maps showing the estimated extent of soil and groundwater contamination along the proposed hydrant fuel system (Figures 7, 8, and 9) were submitted to Argus Consulting, Inc. to assist them in determining the amount of contaminated soil and groundwater to be excavated.

### 3.5.2 Site Geology

The total pavement (concrete and asphalt) thickness of the West Apron ranges from 1.0 to 1.5 feet. The material underlying the apron pavement includes a base layer of sand and gravel with a thickness ranging from approximately 0.2 to 0.35 feet. Beneath this base layer, the stratigraphy can be divided into two distinct lithologic units. The uppermost of these two units is predominantly a fine-grained soil composed mostly of Sandy Lean Clay (CL). This fine-grained soil unit transitions to the east in the vicinity of soil boring LAFBHF-15 into interbedded sands, silts and clays. The total thickness of this uppermost unit ranges from 0.9 to 6.7 feet. Based on visual observations, it is interpreted that this unit may be fill material. The lowermost unit is composed primarily of fine-grained sand with varying amounts of silt and clay. Heaving sand conditions were encountered in the lowermost unit where little or no fines were noted. Heaving sand during drilling and sampling often indicate that unstable excavations below ground water can be anticipated. Refer to the Drilling Logs in Appendix A for more detailed descriptions of the subsurface materials encountered during this investigation.

### 3.5.3 Groundwater

Groundwater was encountered in all of the borings. The depth to groundwater measured in the open borehole immediately after drilling was completed may be found in Table 3. A depth to groundwater was not obtained from ten soil borings due to the collapse of the borehole. It should be noted that groundwater levels may only be approximated when using a direct-push rig. As a result, the levels reported herein should be considered approximate. Accurate levels would require the installation of piezometers or observations wells. The depth to groundwater noted while drilling was generally deeper than that noted in the open borehole, suggesting that confined or partially confined conditions may exist along portions of the proposed hydrant system alignment.

**TABLE 3 – Depths to Groundwater Upon Completion of Drilling**

| Boring No. | Depth to Groundwater (ft) | Boring No. | Depth to Groundwater (ft) | Boring No. | Depth to Groundwater (ft) |
|---|---|---|---|---|---|
| LAFBHF-01 | 3.2 | LAFBHF-11 | 3.0 | LAFBHF-21 | Not measured |
| LAFBHF-02 | 4.0 | LAFBHF-12 | 2.5 | LAFBHF-22 | 4.7 |
| LAFBHF-03 | 4.0 | LAFBHF-13 | 5.5 | LAFBHF-23 | 3.0 |
| LAFBHF-04 | Not measured | LAFBHF-14 | 2.9 | LAFBHF-24 | Not measured |
| LAFBHF-05 | 4.2 | LAFBHF-15 | Not measured | LAFBHF-25 | 2.7 |
| LAFBHF-06 | Not measured | LAFBHF-16 | Not measured | LAFBHF-26 | 4.4 |
| LAFBHF-07 | Not measured | LAFBHF-17 | 2.3 | LAFBHF-27 | 2.9 |
| LAFBHF-08 | 3.8 | LAFBHF-18 | 3.8 | LAFBHF-28 | 3.5 |
| LAFBHF-09 | 3.9 | LAFBHF-19 | 2.2 | LAFBHF-29 | Not measured |
| LAFBHF-10 | 2.7 | LAFBHF-20 | Not measured | LAFBHF-30 | Not measured |

### 3.6 Decontamination

Decontamination procedures included washing the split-spoon sampler with a liquinox and tap water solution followed by a tap water rinse prior to each sample interval, and hand washing the drill rods using the same procedures listed above between each boring.

### 3.7 Borehole Closure

All borings located in unpaved areas were backfilled with bentonite chips to the ground surface and immediately hydrated using tap water. Borings located within paved areas were backfilled with filter pack sand to the base of the pavement, then patched using a high strength (5,000 psi) concrete mix.

## 4. PACKAGING AND SHIPMENT

Following proper collection and labeling, the sample jars were placed in plastic bubble wrap, sealed in plastic baggies, and placed on ice in a cooler. Each cooler was filled with double-bagged cubed ice to cool the samples to 4 degrees centigrade. The completed chain of custody form was placed in a Ziploc bag and taped to the inside of each cooler lid. Custody seals were numbered, dated, signed, and affixed to the outside of each cooler. The seals were placed across the lid opening so that the coolers could not be opened without breaking the seals. Finally, the coolers were sealed with fiber strapping tape. The coolers were delivered to the Environmental Chemistry Branch Lab at 420 S. 18$^{th}$ Street, Omaha, NE.

## 5. PROTECTION LEVEL

All sampling was conducted under worker protection level D. Protection Level D consisted of appropriate fieldwork clothing, hardhat, earplugs, eye protection, Nitrile gloves, and steel toed leather boots.

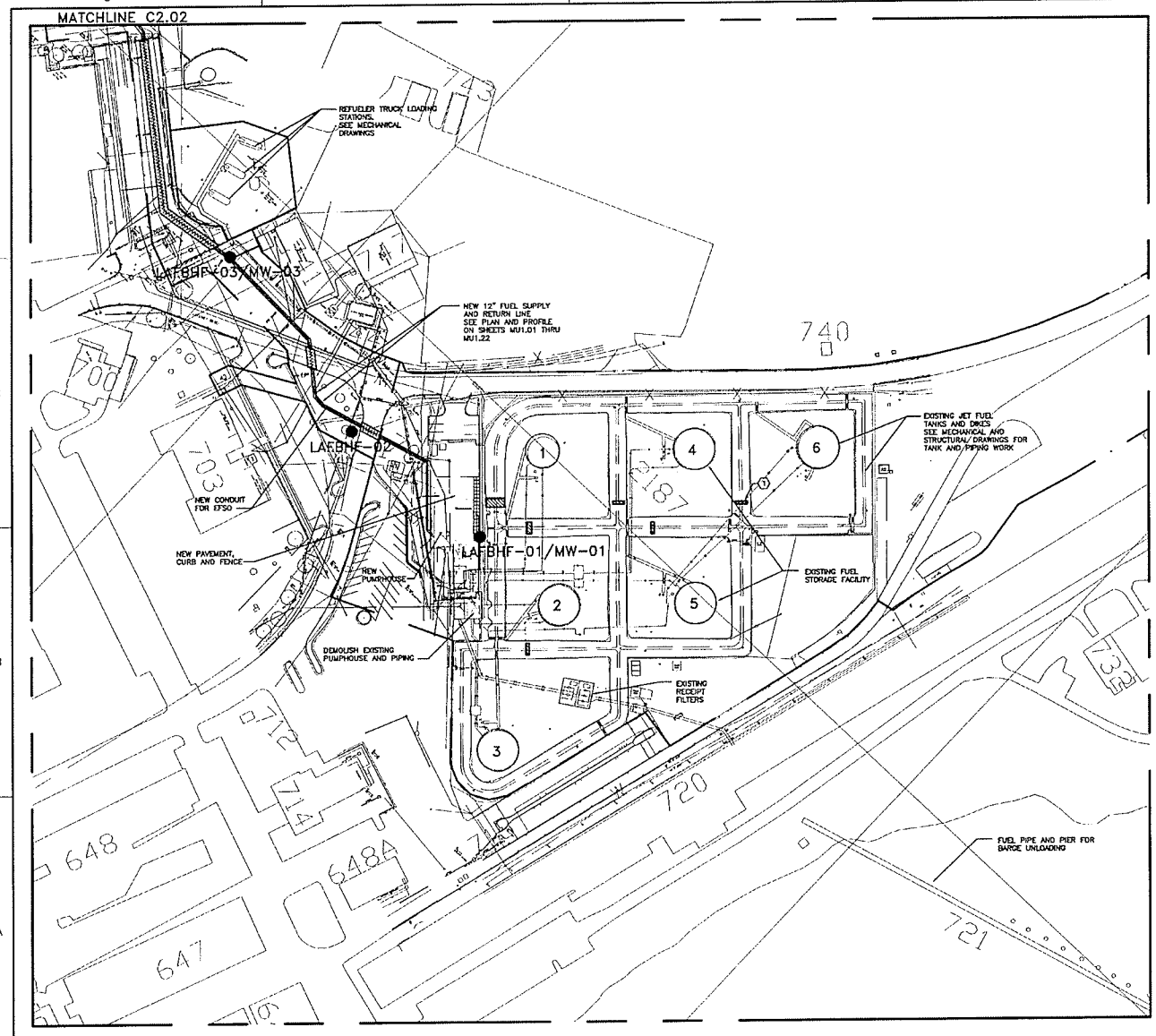


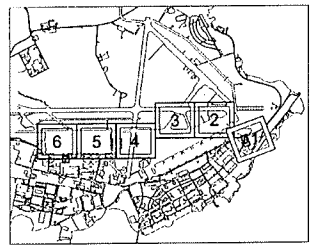


SITE KEY PLAN

KEYNOTE:

1. NEW DIKE / PIPE PENETRATION. (TYP. OF 6)

FIGURE 1

0 50 100 150
SCALE IN FEET

ALL SCALES SHOWN ARE BASED ON A STANDARD DRAWING SIZE OF 28" X 40". IF ANY OTHER SIZE DRAWINGS ARE FURNISHED OR PLOTTED THE CONTRACTOR SHALL ADJUST THE SCALES ACCORDINGLY. THE CONTRACTOR SHALL ALSO ADVISE HIS SUB-CONTRACTORS OF THE ABOVE.

$$ – THINK VALUE ENGINEERING – $$

| REVISIONS | | | |
|---|---|---|---|
| SYMBOL | DESCRIPTIONS | DATE | APPROVED |

U.S. ARMY ENGINEER DISTRICT
CORPS OF ENGINEERS
OMAHA, NEBRASKA

ARGUS CONSULTING, INC.
ENGINEERING, PLANNING, MANAGEMENT
601 NW JEFFERSON SUITE 4
BLUE SPRINGS, MO 64014
816-228-7506

DESIGNED BY: JRD

LANGLEY AFB VIRGINIA

REPLACE HYDRANT FUEL SYSTEM
SITE PLAN
AREA – 1

SUBMITTED BY: X

PLOT SCALE RATIO 1 : 1
DESIGN FILE: X
SPEC NO DACA 45
CONTRACT NO. DACA 45-02-D-006
DATE: 2004
DRAWING CODE: AF 125-10-01
SHEET REFERENCE NUMBER: C2.01

CHIEF: X SECTION

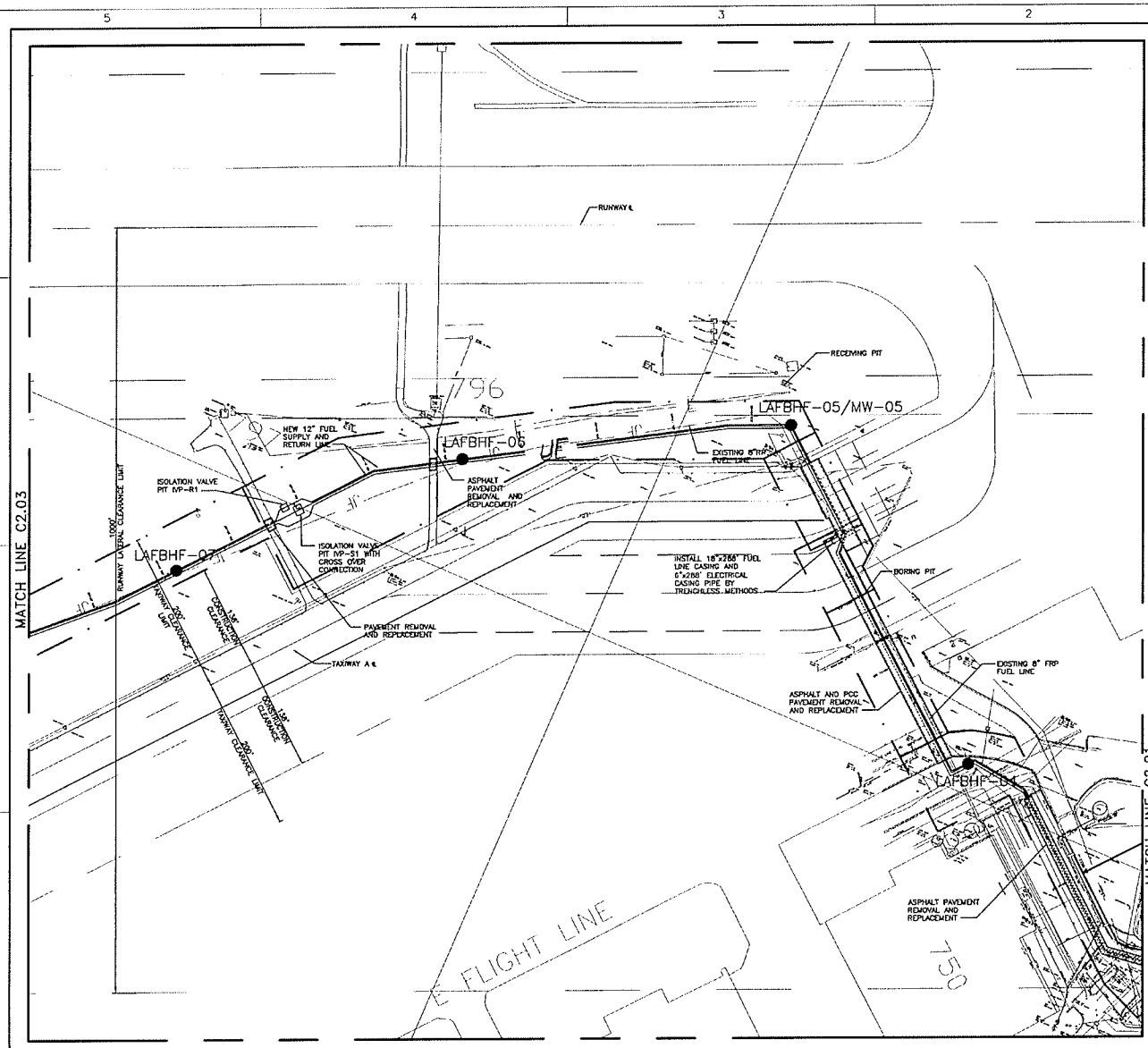


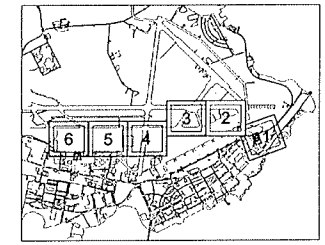


SITE KEY PLAN

# FIGURE 2

0 50 100 150
SCALE IN FEET

ALL SCALES SHOWN ARE BASED ON A STANDARD DRAWING SIZE OF 28" X 40". IF ANY OTHER SIZE DRAWINGS ARE FURNISHED OR PLOTTED THE CONTRACTOR SHALL ADJUST THE SCALES ACCORDINGLY. THE CONTRACTOR SHALL ALSO ADVISE HIS SUB-CONTRACTORS OF THE ABOVE.

$$ – THINK VALUE ENGINEERING – $$

| REVISIONS | | | |
|---|---|---|---|
| SYMBOL | DESCRIPTIONS | DATE | APPROVED |

U.S. ARMY ENGINEER DISTRICT
CORPS OF ENGINEERS
OMAHA, NEBRASKA

ARGUS CONSULTING, INC.
ENGINEERING, PLANNING, MANAGEMENT
601 NW JEFFERSON SUITE 4
BLUE SPRINGS, MO 64014
816-228-7300

DESIGNED BY: JHD

LANGLEY AFB VIRGINIA

REPLACE HYDRANT FUEL SYSTEM
SITE PLAN
AREA – 2

SUBMITTED BY: X

PLOT SCALE RATIO 1 : 1
DESIGN FILE: X
DATE 2004
SHEET REFERENCE NUMBER
DACA 45
CONTRACT NO: DACA 45-02-D-006
DRAWING CODE: AF 125-10-01
C2.02

SHEET: X SECTION

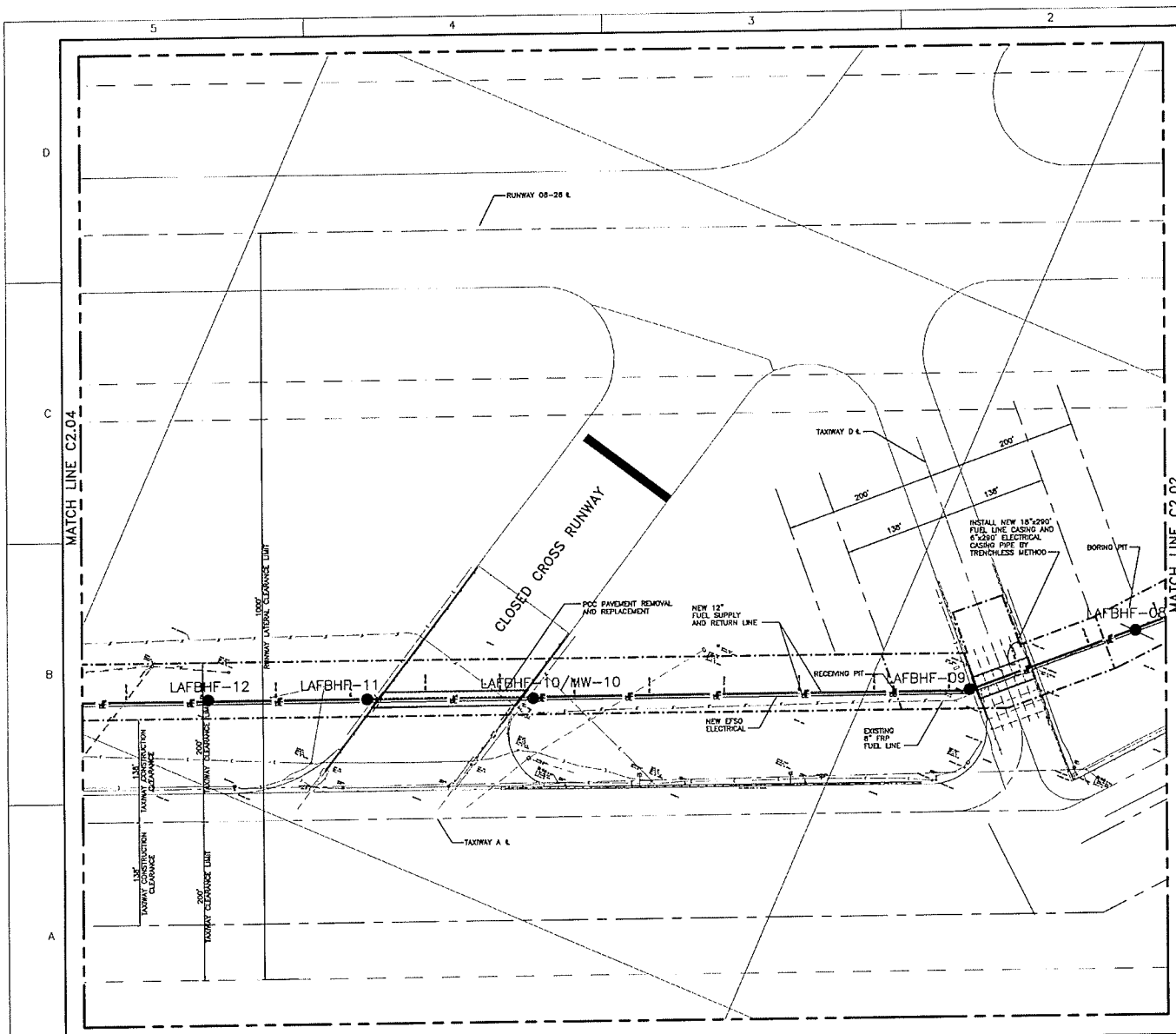


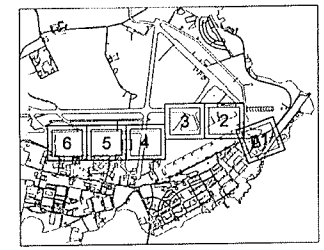


SITE KEY PLAN

# FIGURE 3

SCALE IN FEET

ALL SCALES SHOWN ARE BASED ON A STANDARD DRAWING SIZE OF 28" X 40". IF ANY OTHER SIZE DRAWINGS ARE FURNISHED OR PLOTTED THE CONTRACTOR SHALL ADJUST THE SCALES ACCORDINGLY. THE CONTRACTOR SHALL ALSO ADVISE HIS SUB-CONTRACTORS OF THE ABOVE.

$$ – THINK VALUE ENGINEERING – $$

REVISIONS

| SYMBOL | DESCRIPTIONS | DATE | APPROVED |
|---|---|---|---|
| | | | |

U.S. ARMY ENGINEER DISTRICT
CORPS OF ENGINEERS
OMAHA, NEBRASKA

ARGUS CONSULTING, INC.
ENGINEERING, PLANNING, MANAGEMENT
601 NW JEFFERSON SUITE 4
BLUE SPRINGS, MO 64014
816-228-7300

DESIGNED BY: JRD

LANGLEY AFB VIRGINIA

REPLACE HYDRANT FUEL SYSTEM
SITE PLAN
AREA – 3

SUBMITTED BY: X

PLOT SCALE RATIO: 1 : 1
DESIGN FILE: X
SPEC. NO. DACA 45
CONTRACT NO. DACA 45-02-D-006
DATE: 2004
DRAWING CODE: AF 125-10-01
SHEET REFERENCE NUMBER: C2.03
SHEET: X SECTION

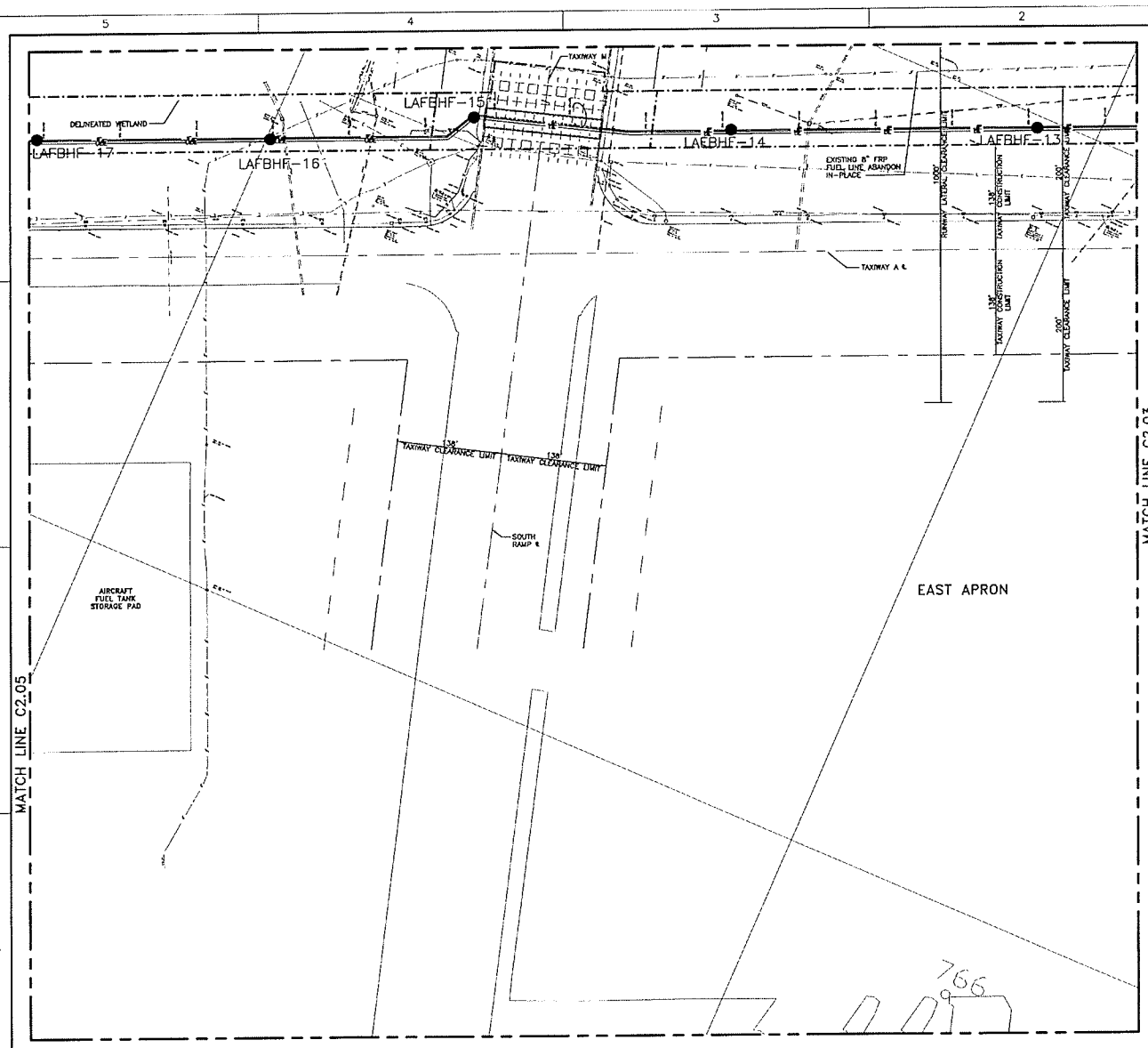


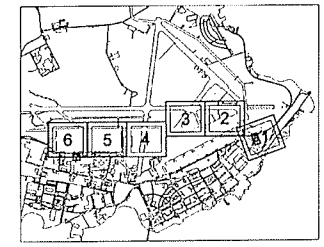


SITE KEY PLAN

# FIGURE 4

0 50 100 150
SCALE IN FEET

ALL SCALES SHOWN ARE BASED ON A STANDARD DRAWING SIZE OF 28" X 40". IF ANY OTHER SIZE DRAWINGS ARE FURNISHED OR PLOTTED THE CONTRACTOR SHALL ADJUST THE SCALES ACCORDINGLY. THE CONTRACTOR SHALL ALSO ADVISE HIS SUB-CONTRACTORS OF THE ABOVE.

$$ – THINK VALUE ENGINEERING – $$

REVISIONS

| SYMBOL | DESCRIPTIONS | DATE | APPROVED |
|---|---|---|---|
| | | | |

U.S. ARMY ENGINEER DISTRICT
CORPS OF ENGINEERS
OMAHA, NEBRASKA

ARGUS CONSULTING, INC.
ENGINEERING, PLANNING, MANAGEMENT
621 NW JEFFERSON SUITE 4
BLUE SPRINGS, MO 64014
816-228-7500

DESIGNED BY: JRD

LANGLEY AFB VIRGINIA

REPLACE HYDRANT FUEL SYSTEM
SITE PLAN
AREA – 4

SUBMITTED BY: X

CHIEF: X SECTION

PLOT SCALE RATIO 1 : 1
DESIGN FILE: X
SPEC. NO.: DACA 45
CONTRACT NO.: DACA 45-02-D-006
DATE: 2004
DRAWING CODE: AF 125-10-01
SHEET REFERENCE NUMBER: C2.04

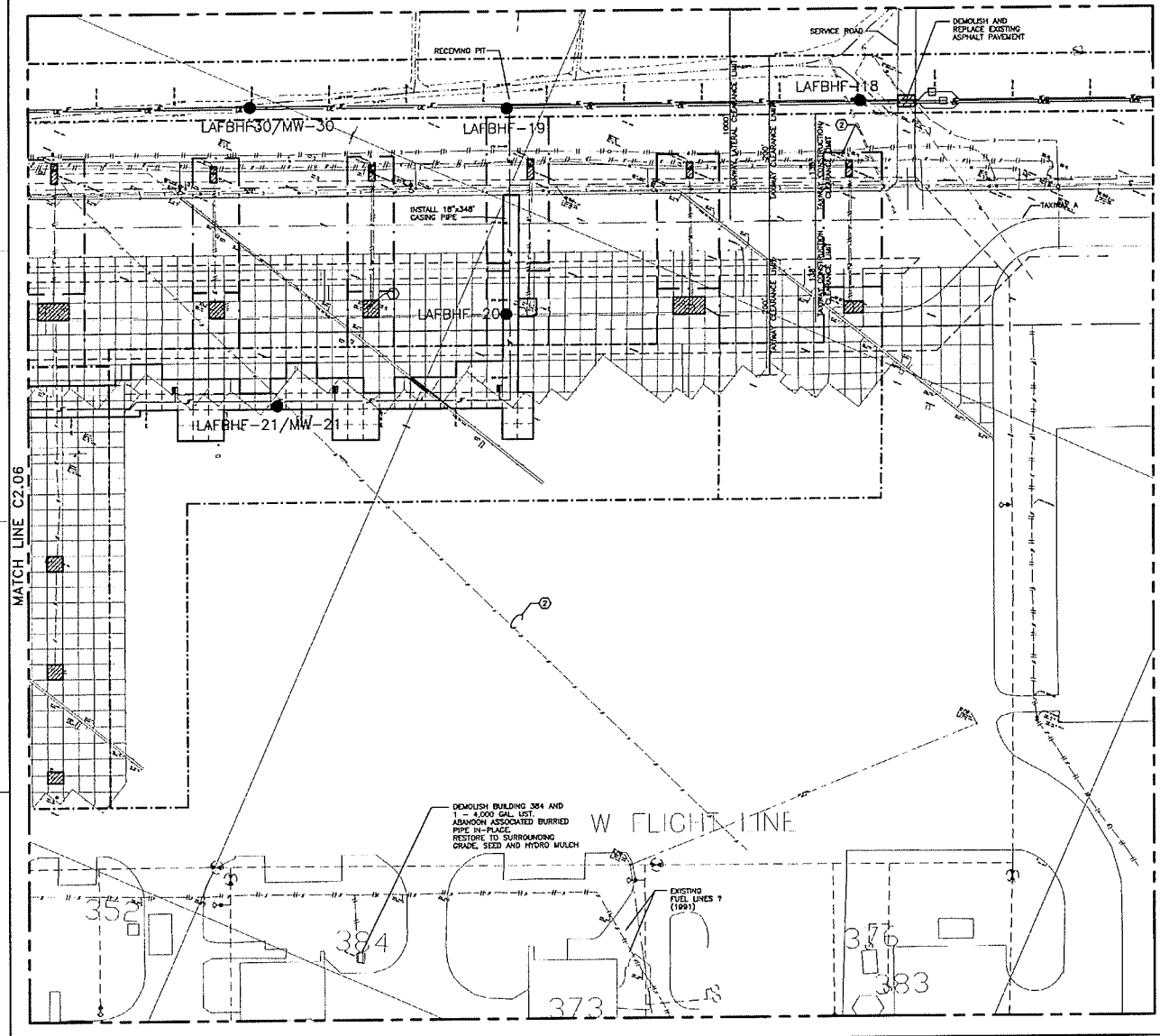


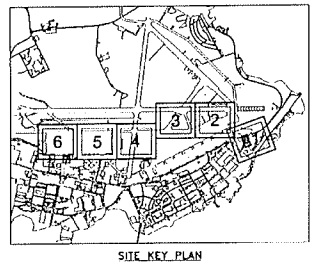


SITE KEY PLAN

# FIGURE 5

0 50 100 150
SCALE IN FEET

ALL SCALES SHOWN ARE BASED ON A STANDARD DRAWING SIZE OF 28" X 40". IF ANY OTHER SIZE DRAWINGS ARE FURNISHED OR PLOTTED THE CONTRACTOR SHALL ADJUST THE SCALES ACCORDINGLY. THE CONTRACTOR SHALL ALSO ADVISE HIS SUB-CONTRACTORS OF THE ABOVE.

$$ - THINK VALUE ENGINEERING - $$

REVISIONS

| SYMBOL | DESCRIPTIONS | DATE | APPROVED |
|---|---|---|---|
| | | | |

U.S. ARMY ENGINEER DISTRICT
CORPS OF ENGINEERS
OMAHA, NEBRASKA

ARCUS CONSULTING, INC.
ENGINEERING, PLANNING, MANAGEMENT
601 NW JEFFERSON SUITE 4
BLUE SPRINGS, MO 64014
816-228-7500

DESIGNED BY: JRD
LANGLEY AFB VIRGINIA

REPLACE HYDRANT FUEL SYSTEM
SITE PLAN
AREA - 5

SUBMITTED BY: X
PLOT SCALE RATIO 1 : 1
DATE 2004
DESIGN FILE: X
SPEC. NO. DACA 45
DRAWING CODE: AF 125-10-01
SHEET REFERENCE NUMBER C2.05
CONTRACT NO. DACA 45-02-D-005
DIRECT X SECTION

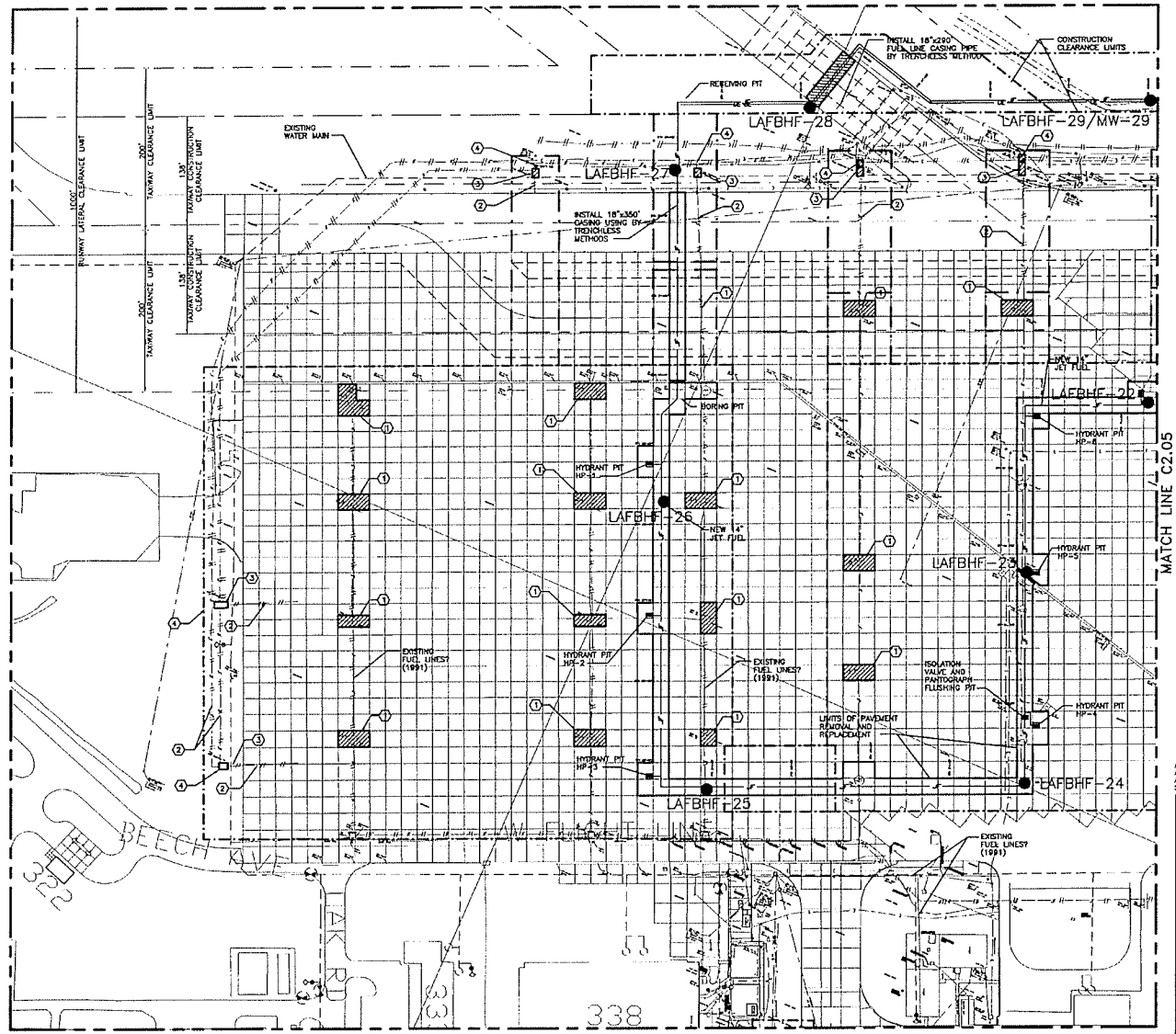


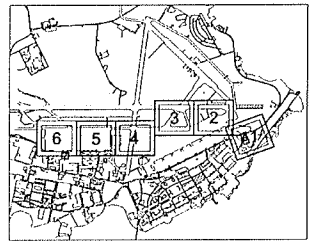


SITE KEY PLAN

KEYNOTES:

1. DEMOLISH EXISTING FUEL PIT AND PCC PAVEMENT. REPLACE PAVEMENT WITH NEW PAVEMENT AND BASE BASE MATCHING EXISTING.
2. DRAIN, GROUT AND ABANDON ALL DESIGNATED FUEL LINES IN-PLACE.
3. DEMOLISH EXISTING METER PIT TO 3" BELOW GRADE, PUNCH 12" DIA. HOLE IN BOTTOM SLAB. BACKFILL WITH COMPACTED SAND AND TOP WITH 2' OF COMPACTED SOIL. TOP 4 INCHES MUST BE TOP SOIL.
4. DEMOLISH EXISTING EFSO STATIONS, CONCRETE PADS AND ABANDON CONDUIT IN-PLACE.

# FIGURE 6

0 50 100 150
SCALE IN FEET

N

ALL SCALES SHOWN ARE BASED ON A STANDARD DRAWING SIZE OF 28" X 40". IF ANY OTHER SIZE DRAWINGS ARE FURNISHED OR PLOTTED THE CONTRACTOR SHALL ADJUST THE SCALES ACCORDINGLY. THE CONTRACTOR SHALL ALSO ADVISE HIS SUB-CONTRACTORS OF THE ABOVE.

$$ – THINK VALUE ENGINEERING – $$

REVISIONS

| SYMBOL | DESCRIPTIONS | DATE | APPROVED |
|---|---|---|---|
| | | | |

U.S. ARMY ENGINEER DISTRICT
CORPS OF ENGINEERS
OMAHA, NEBRASKA

ARGUS CONSULTING, INC.
ENGINEERING, PLANNING, MANAGEMENT
601 NW JEFFERSON SUITE 4
BLUE SPRINGS, MO 64014
816-228-7500

DESIGNED BY: JRD

LANGLEY AFB VIRGINIA

REPLACE HYDRANT FUEL SYSTEM
SITE PLAN
AREA – 6

SUBMITTED BY: X

PLOT SCALE RATIO: 1 : 1
DESIGN FILE: X
DATE: ..... 2004
SPEC. NO. DACA 45
CONTRACT NO. DACA 45-02-D-006
DRAWING CODE: AF 125-10-01
SHEET REFERENCE NUMBER: C2.06

CHIEF: X SECTION

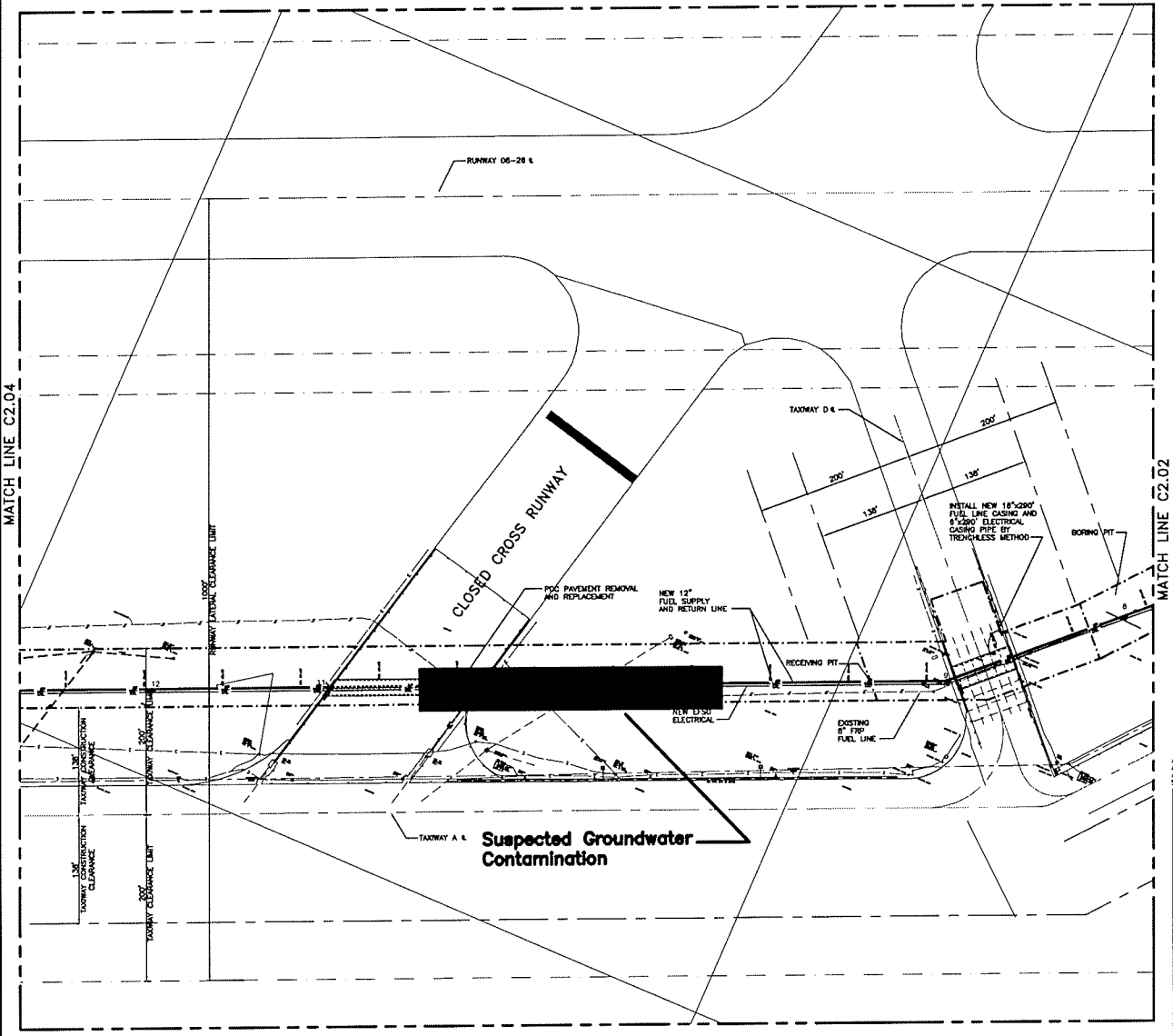


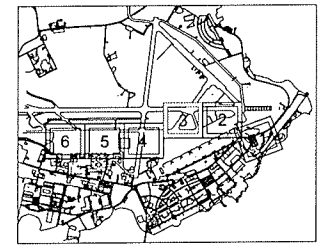


SITE KEY PLAN

# Figure 7

0 50 100 150
SCALE IN FEET

ALL SCALES SHOWN ARE BASED ON A STANDARD DRAWING SIZE OF 28" X 40". IF ANY OTHER SIZE DRAWINGS ARE FURNISHED OR PLOTTED THE CONTRACTOR SHALL ADJUST THE SCALES ACCORDINGLY. THE CONTRACTOR SHALL ALSO ADVISE HIS SUB-CONTRACTORS OF THE ABOVE.

$$ – THINK VALUE ENGINEERING – $$

REVISIONS

| SYMBOL | DESCRIPTIONS | DATE | APPROVED |
|---|---|---|---|
| | | | |

U.S. ARMY ENGINEER DISTRICT
CORPS OF ENGINEERS
OMAHA, NEBRASKA

ARGUS CONSULTING, INC.
ENGINEERING, PLANNING, MANAGEMENT
601 NW JEFFERSON SUITE 4
BLUE SPRINGS, MO 64014
816-228-7500

DESIGNED BY: JRD

LANGLEY AFB VIRGINIA

REPLACE HYDRANT FUEL SYSTEM
SITE PLAN
AREA – 3

SUBMITTED BY: X

PLOT SCALE (RATIO) 1 : 1
DESIGN FILE: X
DATE: _____ 2004
SPEC. NO.: DACA 45
CONTRACT NO.: DACA 45-02-D-006
DRAWING CODE: AF 125-10-01
SHEET REFERENCE NUMBER: C2.03

CHIEF: X SECTION

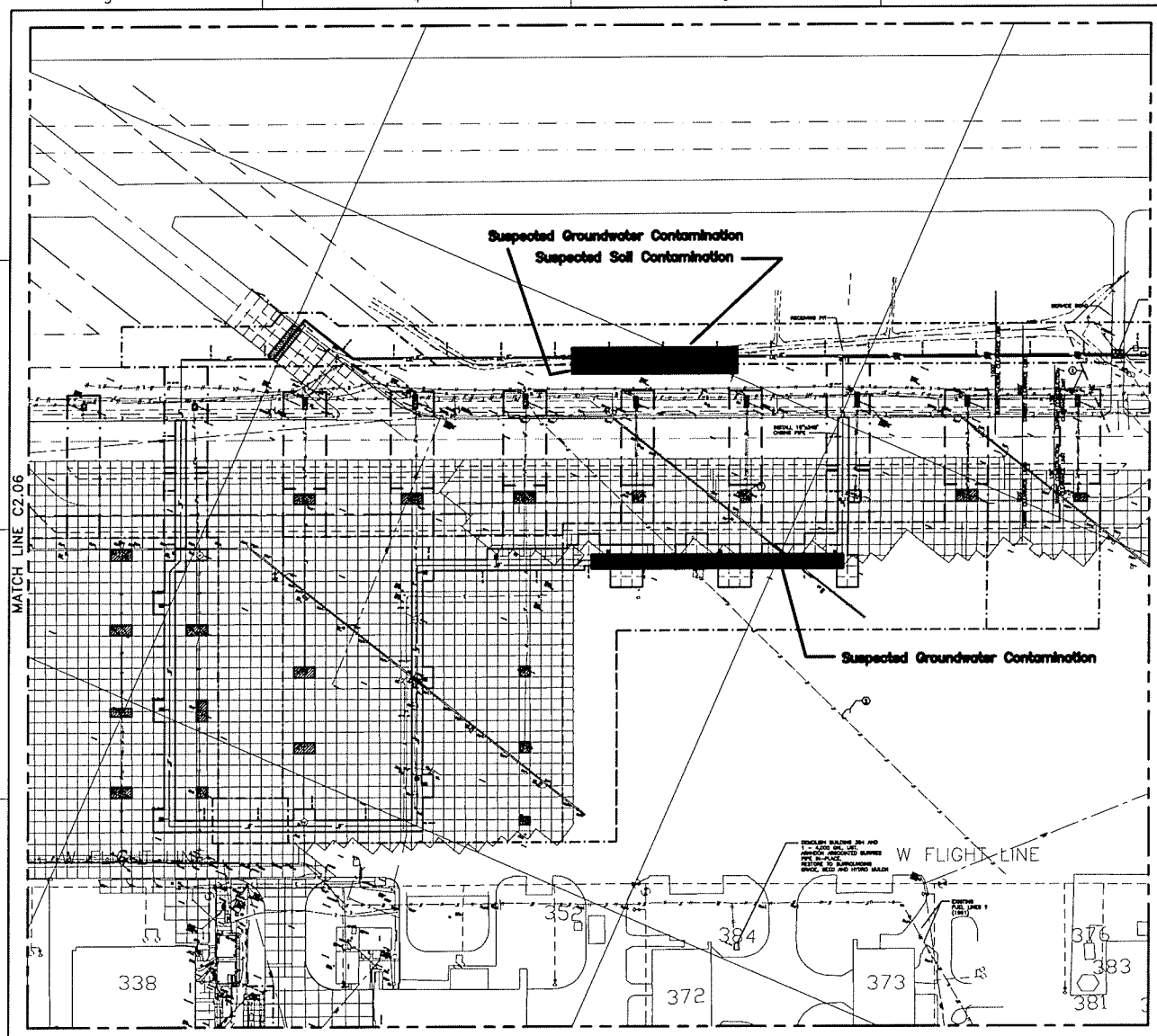


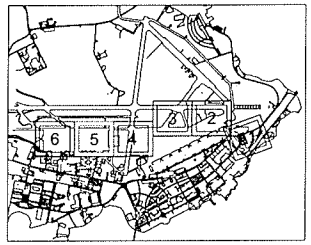


SITE KEY PLAN

# Figure 8

SCALE IN FEET

ALL SCALES SHOWN ARE BASED ON A STANDARD DRAWING SIZE OF 28" X 40". IF ANY OTHER SIZE DRAWINGS ARE FURNISHED OR PLOTTED THE CONTRACTOR SHALL ADJUST THE SCALES ACCORDINGLY. THE CONTRACTOR SHALL ALSO ADVISE HIS SUB-CONTRACTORS OF THE ABOVE.

$$ -- THINK VALUE ENGINEERING -- $$

REVISIONS

| SYMBOL | DESCRIPTIONS | DATE | APPROVED |
|---|---|---|---|
| | | | |

U.S. ARMY ENGINEER DISTRICT
CORPS OF ENGINEERS
OMAHA, NEBRASKA

ARCUS CONSULTING, INC.
ENGINEERING, PLANNING, MANAGEMENT
601 NW JEFFERSON SUITE 4
BLUE SPRINGS, MO 64014
816-228-7500

DESIGNED BY: JRD

LANGLEY AFB VIRGINIA

REPLACE HYDRANT FUEL SYSTEM
SITE PLAN
AREA - 5

SUBMITTED BY: X

PLOT SCALE RATIO: 1 : 1
DATE: ____ 2004
DESIGN FILE: X
SPEC. NO.: DACA 45
CONTRACT NO.: DACA 45-02-D-006
DRAWING CODE: AF 125-10-01
SHEET REFERENCE NUMBER: C2.05

CHIEF: X SECTION

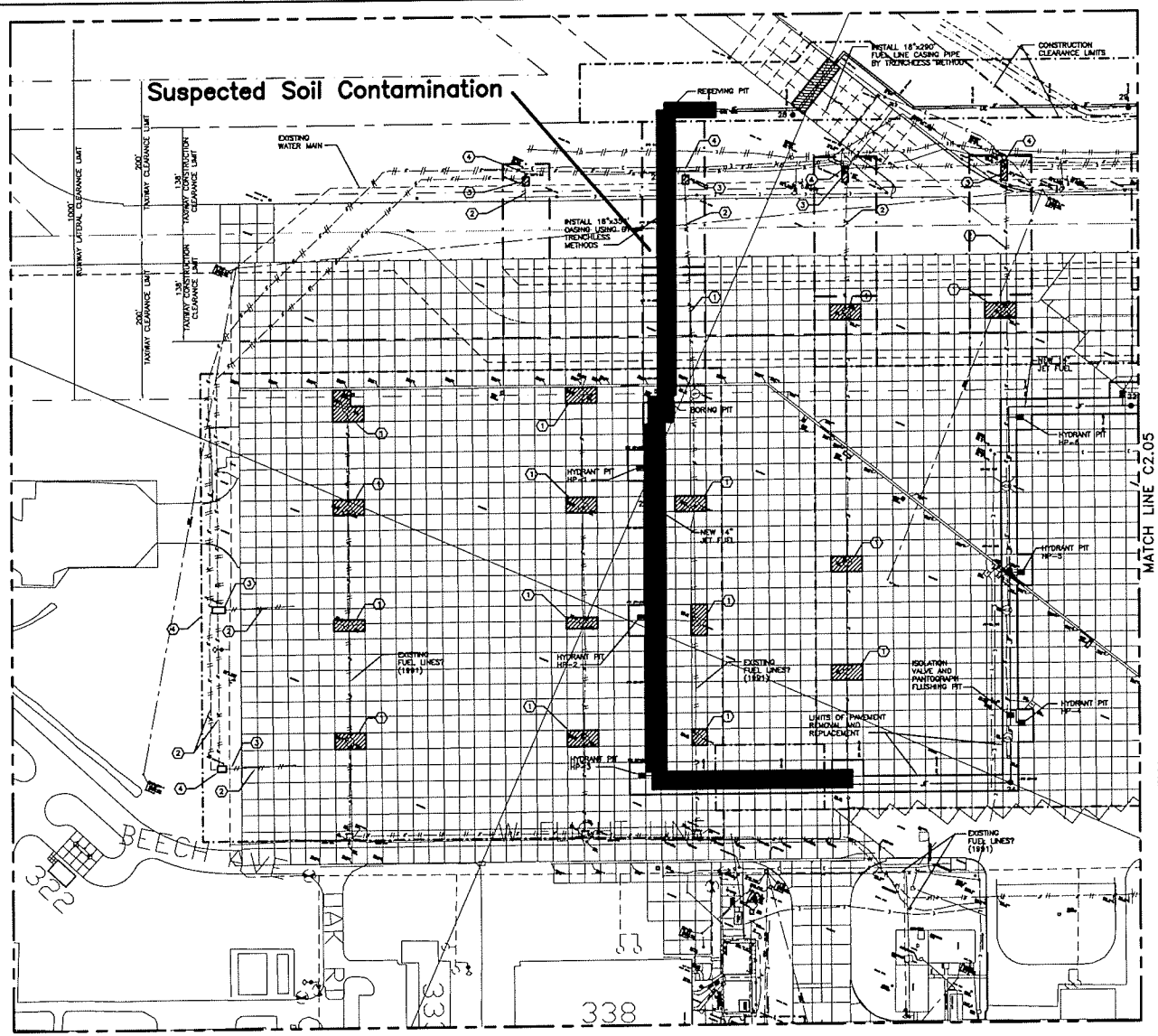


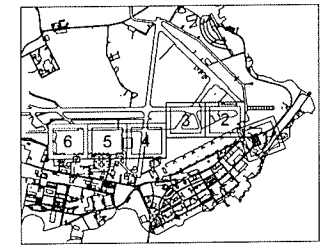


SITE KEY PLAN

KEYNOTES:

1. DEMOLISH EXISTING FUEL PIT AND PCC PAVEMENT. REPLACE PAVEMENT WITH NEW PAVEMENT AND BASE BASE MATCHING EXISTING.
2. DRAIN, GROUT AND ABANDON ALL DESIGNATED FUEL LINES IN-PLACE.
3. DEMOLISH EXISTING METER PIT TO 3' BELOW GRADE. PUNCH 12" DIA. HOLE IN BOTTOM SLAB. BACKFILL WITH COMPACTED SAND AND TOP WITH 2' OF COMPACTED SOIL. TOP 4 INCHES MUST BE TOP SOIL.
4. DEMOLISH EXISTING EFSO STATIONS, CONCRETE PADS AND ABANDON CONDUIT IN-PLACE.

# Figure 9

0 50 100 150
SCALE IN FEET

ALL SCALES SHOWN ARE BASED ON A STANDARD DRAWING SIZE OF 28" X 40". IF ANY OTHER SIZE DRAWINGS ARE FURNISHED OR PLOTTED THE CONTRACTOR SHALL ADJUST THE SCALES ACCORDINGLY. THE CONTRACTOR SHALL ALSO ADVISE HIS SUB-CONTRACTORS OF THE ABOVE.

$$ – THINK VALUE ENGINEERING – $$

REVISIONS

| SYMBOL | DESCRIPTIONS | DATE | APPROVED |
|---|---|---|---|
| | | | |

U.S. ARMY ENGINEER DISTRICT
CORPS OF ENGINEERS
OMAHA, NEBRASKA

ARGUS CONSULTING, INC.
ENGINEERING, PLANNING, MANAGEMENT
801 NW JEFFERSON SUITE 4
BLUE SPRINGS, MO 64014
816-228-7500

DESIGNED BY: JRD

LANGLEY AFB VIRGINIA

REPLACE HYDRANT FUEL SYSTEM
SITE PLAN
AREA – 6

SUBMITTED BY: X

PLOT SCALE RATIO: 1 : 1
DESIGN FILE: X
CONT. NO. DACA 43
DATE: ____ 2004
DRAWING CODE: AF 125-10-01
SHEET REFERENCE NUMBER: C2.06
CONTRACT NO. DACA 43-02-D-008
SHEET: X SECTION

# APPENDIX A

## Drilling Logs

# HTRW DRILLING LOG

| | | |
|---|---|---|
| DISTRICT: Omaha | HOLE NUMBER: LAFBHF-01 | SHEET 1 OF 3 SHEETS |
| 1. COMPANY NAME: USACE | 2. DRILL SUBCONTRACTOR: N/A | |
| 3. PROJECT: Hydrant Fuel System Contamination Investigation | 4. LOCATION: Langley AFB, VA | |
| 5. NAME OF DRILLER: Joe Morrissey | 6. MANUFACTURER'S DESIGNATION OF DRILL: Simco Earthprobe 200 | |
| 7. SIZES AND TYPES OF DRILLING AND SAMPLING EQUIPMENT: Direct-push rig with 2-inch steel split-spoons to 8 feet, then 1-inch steel split-spoons to bottom of boring. | 8. HOLE LOCATION | |
| | 9. SURFACE ELEVATION | |
| | 10. DATE STARTED: 4/27/04 | 11. DATE COMPLETED: 4/27/04 |
| 12. OVERBURDEN THICKNESS: N/A | 15. DEPTH GROUNDWATER ENCOUNTERED | |
| 13. DEPTH DRILLED INTO ROCK: N/A | 16. DEPTH TO WATER AND ELAPSED TIME AFTER DRILLING COMPLETED: 3.2 ft. immediately after drilling complete | |
| 14. TOTAL DEPTH OF HOLE: 16.0 ft | 17. OTHER WATER LEVEL MEASUREMENTS (SPECIFY) | |

| 18. GEOTECHNICAL SAMPLES | DISTURBED | UNDISTURBED | 19. TOTAL NUMBER OF CORE BOXES |
|---|---|---|---|
| | X | | |

| 20. SAMPLES FOR CHEMICAL ANALYSIS | VOC | METALS | OTHER (SPECIFY) | OTHER (SPECIFY) | OTHER (SPECIFY) | 21. TOLAL CORE RECOVERY % |
|---|---|---|---|---|---|---|
| | VOA+OA1(GRO) | | OA2 (DRO) | | | |

| 22. DISPOSITION OF HOLE | BACKFILLED | MONITORING WELL | OTHER (SPECIFY) | 23. SIGNATURE OF INSPECTOR |
|---|---|---|---|---|
| | X | Temporary | | [illegible] |

LOCATION SKETCH/COMMENTS

SCALE

PROJECT: Hydrant Fuel System Contamination Investigation

HOLE NO. LAFBHF-01

ENG FORM 5056-R, AUG 94

(Proponent: CECW-EG)

# HTRW DRILLING LOG (CONTINUATION SHEET)

HOLE NUMBER: LAFBHF-01

PROJECT: Hydrant Fuel System Contamination Investigation

INSPECTOR: R. Grabowski

SHEET 2 OF 3 SHEETS

| ELEV. (a) | DEPTH (b) | DESCRIPTION OF MATERIALS (c) | FIELD SCREENING RESULTS (d) | GEOTECH SAMPLE OR CORE BOX NO. (e) | ANALYTICAL SAMPLE NO. (f) | BLOW COUNT (g) | REMARKS (h) |
|---|---|---|---|---|---|---|---|
| | | Asphalt | | | | | Run #1 - 1305 |
| | 1 | Sandy Lean Clay (CL) - mottled brown, gray, green, moist, medium plasticity fines, coarse fraction predom. fine Sand. | 3 ppm | | | | Recovery - 2.0' |
| | 2 | Poorly Graded Sand with Silt (SP) - mottled gray, brown, moist, predom. fine sand, occasional gravel, fine fraction low to no plasticity fines. | | | LAFBHF-01-4.0 | | Run #2 - 1309 Recovery - 2.0' |
| | 3 | | 3 ppm | | | | |
| | 4 | | | | | | Run #3 - 1318 Recovery - 2.0' |
| | 5 | | 1 ppm | Bulk Density Sample D-4 | | | |
| | | Poorly Graded Sand (SP) - gray, saturated, fine sand. | | D-5 | | | |
| | 6 | | | D-3 | | | Run #4 - 1327 Recovery - 2.0' |
| | 7 | Silty Sand (SM) - gray to brown, saturated, fine sand, low to med. plasticity fines. | 1 ppm | D-3 | | | |
| | 8 | Poorly Graded Sand (SP) - gray, saturated, predom. fine Sand, occasional gravel, some fossil pieces. | | | | | Run #5 - 1404 Recovery - 0.6' |
| | 9 | | 1 ppm | | | | |
| | 10 | | | | | | |

PROJECT: Hydrant Fuel System Contamination Investigation

HOLE NO. LAFBHF-01

ENG FORM 5056A-R, AUG 94 (Proponent: CECW-EG)

# HTRW DRILLING LOG (CONTINUATION SHEET)

HOLE NUMBER: LAFBHF-01

PROJECT: Hydrant Fuel System Contamination Investigation

INSPECTOR: R. Grabowski

SHEET 3 OF 3 SHEETS

| ELEV. (a) | DEPTH (b) | DESCRIPTION OF MATERIALS (c) | FIELD SCREENING RESULTS (d) | GEOTECH SAMPLE OR CORE BOX NO. (e) | ANALYTICAL SAMPLE NO. (f) | BLOW COUNT (g) | REMARKS (h) |
|---|---|---|---|---|---|---|---|
| | | Same as above, | | | | | Run #6- 1419 Recovery- 1.6' |
| | 11 | | 3 ppm | | | | |
| | 12 | | | | | | Run #7- 1425 Recovery- 1.1' |
| | 13 | | 3ppm | | | | |
| | 14 | Silty Sand (SM)- gray to brown, saturated, predominantly fine Sand and fossil hash, low to med. plasticity fines. | | | | | Run #8- 1438 Recovery- 2.0' |
| | 15 | | 4 ppm | | | | |
| | 16 | Bottom of boring 16.0 ft. | | | | | |

PROJECT: Hydrant Fuel System Contamination Investigation

HOLE NO. LAFBHF-01

ENG FORM 5056A-R, AUG 94

(Proponent: CECW-EG)

# HTRW DRILLING LOG

| | | |
|---|---|---|
| DISTRICT: Omaha | | HOLE NUMBER: LAFBHF-02 |
| 1. COMPANY NAME: USACE | 2. DRILL SUBCONTRACTOR: N/A | SHEET 1 OF 3 SHEETS |
| 3. PROJECT: Hydrant Fuel System Contamination Investigation | 4. LOCATION: Langley AFB, VA | |
| 5. NAME OF DRILLER: Joe Morrissey | 6. MANUFACTURER'S DESIGNATION OF DRILL: Simco Earthprobe 200 | |
| 7. SIZES AND TYPES OF DRILLING AND SAMPLING EQUIPMENT: Direct-push rig with 2-inch steel split-spoons to 4 feet, then 1-inch steel split-spoons to bottom of boring. | 8. HOLE LOCATION | |
| | 9. SURFACE ELEVATION | |
| | 10. DATE STARTED: 4/28/04 | 11. DATE COMPLETED: 4/28/04 |
| 12. OVERBURDEN THICKNESS: N/A | 15. DEPTH GROUNDWATER ENCOUNTERED | |
| 13. DEPTH DRILLED INTO ROCK: N/A | 16. DEPTH TO WATER AND ELAPSED TIME AFTER DRILLING COMPLETED: 4.0 ft. immediately after drilling complete | |
| 14. TOTAL DEPTH OF HOLE: 16.0 ft | 17. OTHER WATER LEVEL MEASUREMENTS (SPECIFY) | |

| 18. GEOTECHNICAL SAMPLES | DISTURBED | UNDISTURBED | 19. TOTAL NUMBER OF CORE BOXES |
|---|---|---|---|
| | | | |

| 20. SAMPLES FOR CHEMICAL ANALYSIS | VOC | METALS | OTHER (SPECIFY) | OTHER (SPECIFY) | OTHER (SPECIFY) | 21. TOLAL CORE RECOVERY % |
|---|---|---|---|---|---|---|
| | VOA1OA1(GRO) | | OA2(DRO) | | | |

| 22. DISPOSITION OF HOLE | BACKFILLED | MONITORING WELL | OTHER (SPECIFY) | 23. SIGNATURE OF INSPECTOR |
|---|---|---|---|---|
| | X | | | [illegible] |

LOCATION SKETCH/COMMENTS

SCALE

PROJECT: Hydrant Fuel System Contamination Investigation

HOLE NO. LAFBHF-02

ENG FORM 5056-R, AUG 94

(Proponent: CECW-EG)

# HTRW DRILLING LOG (CONTINUATION SHEET)

HOLE NUMBER: LAFBHF-02

PROJECT: Hydrant Fuel System Contamination Investigation

INSPECTOR: R. Grabowski

SHEET 2 OF 3 SHEETS

| ELEV. (a) | DEPTH (b) | DESCRIPTION OF MATERIALS (c) | FIELD SCREENING RESULTS (d) | GEOTECH SAMPLE OR CORE BOX NO. (e) | ANALYTICAL SAMPLE NO. (f) | BLOW COUNT (g) | REMARKS (h) |
|---|---|---|---|---|---|---|---|
| | | Topsoil | | | | | Run #1 - 1137 |
| | 1 | Silty Sand (SM) - dark to light brown, moist, predom. fine sand, some coarse sand/grad and fossil shells at 1.6'. | 6 ppm | | | | Recovery - 1.6' |
| | 2 | Sandy Lean Clay (CL) - gray, moist, medium plasticity fines, coarse fraction fine sand and fossil shells. | 4 ppm | | LAFBHF-02-4.0 | | Run #2 - 1141 Recovery - 1.7' |
| | 3 | | | | | | |
| | 4 | Lean Clay (CL) - gray, wet to saturated, low to medium plasticity fines, occasional fossil shell | 3 ppm | | | | Run #3 - 1159 Recovery - 1.4' |
| | 5 | | | | | | |
| | 6 | Silty Sand (SM) - gray to brown, saturated, fine sand, low to med. plasticity fines. | No Sample | | | | Run #4 - 1210 Recovery - 0' |
| | 7 | | | | | | |
| | 8 | | | | | | Run #5 - 1220 Recovery - 2.0' |
| | 9 | | 2 ppm | | | | |
| | 10 | | | | | | |

PROJECT: Hydrant Fuel System Contamination Investigation HOLE NO. LAFBHF-02

ENG FORM 5056A-R, AUG 94 (Proponent: CECW-EG)

# HTRW DRILLING LOG (CONTINUATION SHEET)

HOLE NUMBER: LAFBHF-02

PROJECT: Hydrant Fuel System Contamination Investigation

INSPECTOR: R. Grabowski

SHEET 3 OF 3 SHEETS

| ELEV. (a) | DEPTH (b) | DESCRIPTION OF MATERIALS (c) | FIELD SCREENING RESULTS (d) | GEOTECH SAMPLE OR CORE BOX NO. (e) | ANALYTICAL SAMPLE NO. (f) | BLOW COUNT (g) | REMARKS (h) |
|---|---|---|---|---|---|---|---|
| | 11 | Same as above. | 3 ppm | | | | Run #6- 1227 Recovery- 1.3' |
| | 12 | | | | | | Run #7- 1244 Recovery- 2.0' |
| | 13 | | 2 ppm | | | | |
| | 14 | | | | | | Run #8- 1255 Recovery- 2.0' |
| | 15 | Same as above. Fossil fragments at bottom of boring | 4 ppm | | | | |
| | 16 | Bottom of boring | 16.0 ft. | | | | |

PROJECT: Hydrant Fuel System Contamination Investigation HOLE NO. LAFBHF-02

ENG FORM 5056A-R, AUG 94 (Proponent: CECW-EG)

# HTRW DRILLING LOG

| | | |
|---|---|---|
| DISTRICT: Omaha | | HOLE NUMBER: LAFBHF-03 |
| 1. COMPANY NAME: USACE | 2. DRILL SUBCONTRACTOR: N/A | SHEET 1 OF 3 SHEETS |
| 3. PROJECT: Hydrant Fuel System Contamination Investigation | 4. LOCATION: Langley AFB, VA | |
| 5. NAME OF DRILLER: Joe Morrissey | 6. MANUFACTURER'S DESIGNATION OF DRILL: Simco Earthprobe 200 | |
| 7. SIZES AND TYPES OF DRILLING AND SAMPLING EQUIPMENT: Direct-push rig with 2-inch steel split-spoons to 8 feet, then 1-inch steel split-spoons to bottom of boring. | 8. HOLE LOCATION | |
| | 9. SURFACE ELEVATION | |
| | 10. DATE STARTED: 4/28/04 | 11. DATE COMPLETED: 4/28/04 |
| 12. OVERBURDEN THICKNESS: N/A | 15. DEPTH GROUNDWATER ENCOUNTERED | |
| 13. DEPTH DRILLED INTO ROCK: N/A | 16. DEPTH TO WATER AND ELAPSED TIME AFTER DRILLING COMPLETED: 4.0 ft. immediately after drilling complete | |
| 14. TOTAL DEPTH OF HOLE: 16.0 ft | 17. OTHER WATER LEVEL MEASUREMENTS (SPECIFY) | |

| 18. GEOTECHNICAL SAMPLES | DISTURBED | UNDISTURBED | 19. TOTAL NUMBER OF CORE BOXES |
|---|---|---|---|
| | X | | |

| 20. SAMPLES FOR CHEMICAL ANALYSIS | VOC | METALS | OTHER (SPECIFY) | OTHER (SPECIFY) | OTHER (SPECIFY) | 21. TOTAL CORE RECOVERY % |
|---|---|---|---|---|---|---|
| | VOA1OA1(GRO) | | OA2 (DRO) | | | |

| 22. DISPOSITION OF HOLE | BACKFILLED | MONITORING WELL | OTHER (SPECIFY) | 23. SIGNATURE OF INSPECTOR |
|---|---|---|---|---|
| | X | Temporary | | [illegible] |

LOCATION SKETCH/COMMENTS

SCALE

PROJECT: Hydrant Fuel System Contamination Investigation

HOLE NO. LAFBHF-03

ENG FORM 5056-R, AUG 94

(Proponent: CECW-EG)

# HTRW DRILLING LOG (CONTINUATION SHEET)

HOLE NUMBER: LAFBHF-03

PROJECT: Hydrant Fuel System Contamination Investigation

INSPECTOR: R. Grabowski

SHEET 2 OF 3 SHEETS

| ELEV. (a) | DEPTH (b) | DESCRIPTION OF MATERIALS (c) | FIELD SCREENING RESULTS (d) | GEOTECH SAMPLE OR CORE BOX NO. (e) | ANALYTICAL SAMPLE NO. (f) | BLOW COUNT (g) | REMARKS (h) |
|---|---|---|---|---|---|---|---|
| | 1 | Topsoil<br>Sandy Silt (ML) - brown, moist, low to medium plasticity fines, coarse fraction predom. fine sand with occas. gravel. | 4 ppm | | | | Run #1 - 0841<br>Recovery - 1.2' |
| | 2 | | | | LAFBHF-03-4.0 | | Run #2 - 0847<br>Recovery - 1.9' |
| | 3 | | 3 ppm | | | | |
| | 4 | Same as above. Gray colored below 4.9'. Silt layers at 5.25-5.4' and 5.6 - 5.7'. | | | | | Run #3 - 0858<br>Recovery - 1.7' |
| | 5 | | 4 ppm | | | | |
| | 6 | | | | | | Run #4 - 0905<br>Recovery - 2.0' |
| | 7 | | 3 ppm | D-6 | | | |
| | 8 | Silt (ML) - gray, saturated, low plasticity fines, some very fine grained sand. | | | | | Run #5 - 0925<br>Recovery - 1.9' |
| | 9 | | 4 ppm | | | | |
| | 10 | | | | | | |

PROJECT: Hydrant Fuel System Contamination Investigation HOLE NO. LAFBHF-03

ENG FORM 5056A-R, AUG 94 (Proponent: CECW-EG)

# HTRW DRILLING LOG (CONTINUATION SHEET)

HOLE NUMBER: LAFBHF-03

PROJECT: Hydrant Fuel System Contamination Investigation

INSPECTOR: R. Grabowski

SHEET 3 OF 3 SHEETS

| ELEV. (a) | DEPTH (b) | DESCRIPTION OF MATERIALS (c) | FIELD SCREENING RESULTS (d) | GEOTECH SAMPLE OR CORE BOX NO. (e) | ANALYTICAL SAMPLE NO. (f) | BLOW COUNT (g) | REMARKS (h) |
|---|---|---|---|---|---|---|---|
| | 11 | Same as above, | 4 ppm | | | | Run #6 - 0934 Recovery - 1.3' |
| | 12 | | | | | | |
| | 13 | | 4 ppm | | | | Run #7 - 0942 Recovery - 1.2' |
| | 14 | Poorly Graded Sand with Silt (SP) - gray, Saturated, fine grained Sand, low to no plast. fines. | | | | | |
| | 15 | | No Sample | | | | Run #8 - 0949 Recovery - 0' |
| | 16 | Bottom of boring | 16.0 ft. | | | | |

PROJECT: Hydrant Fuel System Contamination Investigation

HOLE NO. LAFBHF-03

ENG FORM 5056A-R, AUG 94 (Proponent: CECW-EG)

# HTRW DRILLING LOG

| | | |
|---|---|---|
| DISTRICT: Omaha | | HOLE NUMBER: LAFBHF-04 |
| 1. COMPANY NAME: USACE | 2. DRILL SUBCONTRACTOR: N/A | SHEET 1 OF 3 SHEETS |
| 3. PROJECT: Hydrant Fuel System Contamination Investigation | 4. LOCATION: Langley AFB, VA | |
| 5. NAME OF DRILLER: Joe Morrissey | 6. MANUFACTURER'S DESIGNATION OF DRILL: Simco Earthprobe 200 | |
| 7. SIZES AND TYPES OF DRILLING AND SAMPLING EQUIPMENT: Direct-push rig with 2-inch steel split-spoons to 4 feet, then 1-inch steel split-spoons to bottom of boring | 8. HOLE LOCATION | |
| | 9. SURFACE ELEVATION | |
| | 10. DATE STARTED: 5/5/04 | 11. DATE COMPLETED: 5/5/04 |
| 12. OVERBURDEN THICKNESS: N/A | 15. DEPTH GROUNDWATER ENCOUNTERED | |
| 13. DEPTH DRILLED INTO ROCK: N/A | 16. DEPTH TO WATER AND ELAPSED TIME AFTER DRILLING COMPLETED: Not measured. | |
| 14. TOTAL DEPTH OF HOLE: 16.0 ft. | 17. OTHER WATER LEVEL MEASUREMENTS (SPECIFY) | |

| 18. GEOTECHNICAL SAMPLES | DISTURBED | UNDISTURBED | 19. TOTAL NUMBER OF CORE BOXES |
|---|---|---|---|
| | | | |

| 20. SAMPLES FOR CHEMICAL ANALYSIS | VOC | METALS | OTHER (SPECIFY) | OTHER (SPECIFY) | OTHER (SPECIFY) | 21. TOTAL CORE RECOVERY % |
|---|---|---|---|---|---|---|
| | VOA+OA1(GRO) | | OA2 (DRO) | | | |

| 22. DISPOSITION OF HOLE | BACKFILLED | MONITORING WELL | OTHER (SPECIFY) | 23. SIGNATURE OF INSPECTOR |
|---|---|---|---|---|
| | X | | | [signature] |

LOCATION SKETCH/COMMENTS

SCALE

| PROJECT: Hydrant Fuel System Contamination Investigation | HOLE NO. LAFBHF-04 |
|---|---|

ENG FORM 5056-R, AUG 94 (Proponent: CECW-EG)

# HTRW DRILLING LOG (CONTINUATION SHEET)

HOLE NUMBER: LAFBHF-04

PROJECT: Hydrant Fuel System Contamination Investigation

INSPECTOR: R. Grabowski

SHEET 2 OF 3 SHEETS

| ELEV. (a) | DEPTH (b) | DESCRIPTION OF MATERIALS (c) | FIELD SCREENING RESULTS (d) | GEOTECH SAMPLE OR CORE BOX NO. (e) | ANALYTICAL SAMPLE NO. (f) | BLOW COUNT (g) | REMARKS (h) |
|---|---|---|---|---|---|---|---|
| | | Topsoil | | | | | Run #1 - 0825 |
| | | Silty Sand (SM) - brown, moist, fine sand, low to no plasticity fines. | | | | | Recovery - 2.0' |
| | 1 | Poorly Graded Sand (SP) - brown, moist, fine sand with some occasional gravel. | 2 ppm | | | | |
| | 2 | Silty Sand (SM) - gray, moist, fine sand, low to no plasticity fines | | | LAFBHF-04-4.0 | | Run #2 - 0831 Recovery - 1.6' |
| | 3 | | 3 ppm | | | | |
| | 4 | | | | | | Run #3 - 0846 Recovery - 1.6' |
| | 5 | | 4 ppm | | | | |
| | | Lean Clay (CL) - dark gray, med. plasticity fines, some organic matter. | | | | | |
| | 6 | Sandy Silt (ML) - dark brown, wet, organic matter, coarse fraction predom. fine sand. | | | | | Run #4 - 0850 Recovery - 1.2' |
| | 7 | Poorly Graded Sand (SP) - gray to brown, wet, predom. fine sand. with occasional coarse sand to gravel. | 2 ppm | | | | |
| | 8 | | | | | | Run #5 - 0900 Recovery - 2.0' |
| | 9 | Silty Sand (SM) - gray to brown, wet, fine sand, low to no plasticity fines. | 3 ppm | | | | |
| | 10 | | | | | | |

PROJECT: Hydrant Fuel System Contamination Investigation HOLE NO. LAFBHF-04

ENG FORM 5056A-R, AUG 94 (Proponent: CECW-EG)

# HTRW DRILLING LOG (CONTINUATION SHEET)

HOLE NUMBER: LAFBHF-04

PROJECT: Hydrant Fuel System Contamination Investigation

INSPECTOR: R. Grabowski

SHEET 3 OF 3 SHEETS

| ELEV. (a) | DEPTH (b) | DESCRIPTION OF MATERIALS (c) | FIELD SCREENING RESULTS (d) | GEOTECH SAMPLE OR CORE BOX NO. (e) | ANALYTICAL SAMPLE NO. (f) | BLOW COUNT (g) | REMARKS (h) |
|---|---|---|---|---|---|---|---|
| | | Same as above. | | | | | Run #6-0908 Recovery-0.4' |
| | 11 | | 2 ppm | | | | |
| | 12 | | | | | | Run #7-0921 Recovery-2.0' |
| | 13 | | 4 ppm | | | | |
| | 14 | Poorly Graded Sand (SP)- gray, wet, fine grained sand with fossiliferous hash. | | | | | Run #8-0934 Recovery-2.0' |
| | 15 | | 3 ppm | | | | |
| | 16 | Bottom of boring | 16.0 ft. | | | | |

PROJECT: Hydrant Fuel System Contamination Investigation HOLE NO. LAFBHF-04

ENG FORM 5056A-R, AUG 94 (Proponent: CECW-EG)

# HTRW DRILLING LOG

| | | |
|---|---|---|
| DISTRICT: Omaha | HOLE NUMBER: LAFBHF-05 | |
| 1. COMPANY NAME: USACE | 2. DRILL SUBCONTRACTOR: N/A | SHEET 1 OF 2 SHEETS |
| 3. PROJECT: Hydrant Fuel System Contamination Investigation | 4. LOCATION: Langley AFB, VA | |
| 5. NAME OF DRILLER: Joe Morrissey | 6. MANUFACTURER'S DESIGNATION OF DRILL: Simco Earthprobe 200 | |
| 7. SIZES AND TYPES OF DRILLING AND SAMPLING EQUIPMENT: Direct-push rig with 2-inch steel split-spoons to bottom of boring | 8. HOLE LOCATION | |
| | 9. SURFACE ELEVATION | |
| | 10. DATE STARTED: 5/4/04 | 11. DATE COMPLETED: 5/4/04 |
| 12. OVERBURDEN THICKNESS: N/A | 15. DEPTH GROUNDWATER ENCOUNTERED | |
| 13. DEPTH DRILLED INTO ROCK: N/A | 16. DEPTH TO WATER AND ELAPSED TIME AFTER DRILLING COMPLETED: 4.2 ft. immediately after drilling complete | |
| 14. TOTAL DEPTH OF HOLE: 10.0 ft. | 17. OTHER WATER LEVEL MEASUREMENTS (SPECIFY) | |

| 18. GEOTECHNICAL SAMPLES | DISTURBED | UNDISTURBED | 19. TOTAL NUMBER OF CORE BOXES |
|---|---|---|---|
| | X | | |

| 20. SAMPLES FOR CHEMICAL ANALYSIS | VOC | METALS | OTHER (SPECIFY) | OTHER (SPECIFY) | OTHER (SPECIFY) | 21. TOTAL CORE RECOVERY % |
|---|---|---|---|---|---|---|
| | VOA+OA1(GRO) | | OA2 (DRO) | | | |

| 22. DISPOSITION OF HOLE | BACKFILLED | MONITORING WELL | OTHER (SPECIFY) | 23. SIGNATURE OF INSPECTOR |
|---|---|---|---|---|
| | X | Temporary | | [illegible] |

LOCATION SKETCH/COMMENTS

SCALE

PROJECT: Hydrant Fuel System Contamination Investigation

HOLE NO. LAFBHF-05

ENG FORM 5056-R, AUG 94

(Proponent: CECW-EG)

# HTRW DRILLING LOG (CONTINUATION SHEET)

HOLE NUMBER: LAFB#F-05

PROJECT: Hydrant Fuel System Contamination Investigation

INSPECTOR: R. Grabowski

SHEET 2 OF 2 SHEETS

| ELEV. (a) | DEPTH (b) | DESCRIPTION OF MATERIALS (c) | FIELD SCREENING RESULTS (d) | GEOTECH SAMPLE OR CORE BOX NO. (e) | ANALYTICAL SAMPLE NO. (f) | BLOW COUNT (g) | REMARKS (h) |
|---|---|---|---|---|---|---|---|
| | | Topsoil | | | | | |
| | 1 | Silty Sand (SM) - dark brown, moist, predom. fine sand with occas. gravel, low to noplastic fines. | 7 ppm | | | | Run #1 - 1510 Recovery - 1.7' |
| | 2 | | | | LAFB#F-05-4.0 | | Run #2 - 1520 Recovery - 2.0' |
| | 3 | Sandy Lean Clay (CL) - mottled gray, brown, moist, medium plast. fines, coarse fraction fine sand. | 6 ppm | | | | |
| | 4 | | | | | | Run #3 - 1530 Recovery - 2.0' |
| | 5 | | 3 ppm | | | | |
| | 6 | | | D-12b | | | Run #4 - 1537 Recovery - 2.0' |
| | 7 | Poorly Graded Sand (SP) - mottled gray, brown, wet, fine grained sand, foss. hash at bottom of boring. | 4 ppm | D-12a | | | |
| | 8 | | | | | | Run #5 - 1557 Recovery - 2.0' |
| | 9 | | 5 ppm | | | | |
| | 10 | Bottom of boring 10.0 ft. | | | | | |

PROJECT: Hydrant Fuel System Contamination Investigation

HOLE NO. LAFB#F-05

ENG FORM 5056A-R, AUG 94 (Proponent: CECW-EG)

# HTRW DRILLING LOG

| | | |
|---|---|---|
| DISTRICT: Omaha | | HOLE NUMBER: LAFBHF-06 |
| 1. COMPANY NAME: USACE | 2. DRILL SUBCONTRACTOR: N/A | SHEET 1 OF 2 SHEETS |
| 3. PROJECT: Hydrant Fuel System Contamination Investigation | 4. LOCATION: Langley AFB, VA | |
| 5. NAME OF DRILLER: Joe Morrissey | 6. MANUFACTURER'S DESIGNATION OF DRILL: Simco Earthprobe 200 | |
| 7. SIZES AND TYPES OF DRILLING AND SAMPLING EQUIPMENT: Direct-push rig with 2-inch steel split-spoons to bottom of boring. | 8. HOLE LOCATION | |
| | 9. SURFACE ELEVATION | |
| | 10. DATE STARTED: 5/4/04 | 11. DATE COMPLETED: 5/4/04 |
| 12. OVERBURDEN THICKNESS: N/A | 15. DEPTH GROUNDWATER ENCOUNTERED | |
| 13. DEPTH DRILLED INTO ROCK: N/A | 16. DEPTH TO WATER AND ELAPSED TIME AFTER DRILLING COMPLETED: Not measured. | |
| 14. TOTAL DEPTH OF HOLE: 8.0 ft. | 17. OTHER WATER LEVEL MEASUREMENTS (SPECIFY) | |

| 18. GEOTECHNICAL SAMPLES | DISTURBED | UNDISTURBED | 19. TOTAL NUMBER OF CORE BOXES |
|---|---|---|---|
| | | | |

| 20. SAMPLES FOR CHEMICAL ANALYSIS | VOC | METALS | OTHER (SPECIFY) | OTHER (SPECIFY) | OTHER (SPECIFY) | 21. TOLAL CORE RECOVERY % |
|---|---|---|---|---|---|---|
| | VOA+OA1(GRO) | | OA2(DRO) | | | |

| 22. DISPOSITION OF HOLE | BACKFILLED | MONITORING WELL | OTHER (SPECIFY) | 23. SIGNATURE OF INSPECTOR |
|---|---|---|---|---|
| | X | | | [illegible] |

LOCATION SKETCH/COMMENTS | SCALE

PROJECT: Hydrant Fuel System Contamination Investigation | HOLE NO. LAFBHF-06

ENG FORM 5056-R, AUG 94 (Proponent: CECW-EG)

# HTRW DRILLING LOG (CONTINUATION SHEET)

HOLE NUMBER: LAFBHF-06

PROJECT: Hydrant Fuel System Contamination Investigation

INSPECTOR: R. Grabowski

SHEET 2 OF 2 SHEETS

| ELEV. (a) | DEPTH (b) | DESCRIPTION OF MATERIALS (c) | FIELD SCREENING RESULTS (d) | GEOTECH SAMPLE OR CORE BOX NO. (e) | ANALYTICAL SAMPLE NO. (f) | BLOW COUNT (g) | REMARKS (h) |
|---|---|---|---|---|---|---|---|
| | | Topsoil | | | | | Run #1 - 1422 |
| | 1 | Poorly Graded Sand (SP) - brown to gray, moist, fine sand with occasional gravel. | 9 ppm | | | | Recovery - 1.7' |
| | 2 | Sandy Lean Clay (CL) - mottled gray, brown, moist, medium plast. fines, coarse fraction predom. fine sand with occas. gravel. | 8 ppm | | LAFBHF-06-4.0 | | Run #2 - 1427 Recovery - 1.7' |
| | 3 | | | | | | |
| | 4 | Poorly Graded Sand (SP) - gray to brown, wet, fine grained sand with occas. gravel. | 6 ppm | | | | Run #3 - 1437 Recovery - 2.0' |
| | 5 | | | | | | |
| | 6 | | 6 ppm | | | | Run #4 - 1442 Recovery - 2.0' |
| | 7 | | | | | | |
| | 8 | Bottom of boring | 8.0 ft. | | | | |

PROJECT: Hydrant Fuel System Contamination Investigation HOLE NO. LAFBHF-06

ENG FORM 5056A-R, AUG 94 (Proponent: CECW-EG)

# HTRW DRILLING LOG

| | | |
|---|---|---|
| DISTRICT: Omaha | HOLE NUMBER: LAFBHF-07 | |
| 1. COMPANY NAME: USACE | 2. DRILL SUBCONTRACTOR: N/A | SHEET 1 OF SHEETS 2 |
| 3. PROJECT: Hydrant Fuel System Contamination Investigation | 4. LOCATION: Langley AFB, VA | |
| 5. NAME OF DRILLER: Joe Morrissey | 6. MANUFACTURER'S DESIGNATION OF DRILL: Simco Earthprobe 200 | |
| 7. SIZES AND TYPES OF DRILLING AND SAMPLING EQUIPMENT: Direct-push rig with 2-inch steel split-spoons to bottom of boring. | 8. HOLE LOCATION | |
| | 9. SURFACE ELEVATION | |
| | 10. DATE STARTED: 5/4/04 | 11. DATE COMPLETED: 5/4/04 |
| 12. OVERBURDEN THICKNESS: N/A | 15. DEPTH GROUNDWATER ENCOUNTERED | |
| 13. DEPTH DRILLED INTO ROCK: N/A | 16. DEPTH TO WATER AND ELAPSED TIME AFTER DRILLING COMPLETED: Not measured. | |
| 14. TOTAL DEPTH OF HOLE: 8.0 ft. | 17. OTHER WATER LEVEL MEASUREMENTS (SPECIFY) | |

| 18. GEOTECHNICAL SAMPLES | DISTURBED | UNDISTURBED | 19. TOTAL NUMBER OF CORE BOXES |
|---|---|---|---|
| | | | |

| 20. SAMPLES FOR CHEMICAL ANALYSIS | VOC | METALS | OTHER (SPECIFY) | OTHER (SPECIFY) | OTHER (SPECIFY) | 21. TOTAL CORE RECOVERY % |
|---|---|---|---|---|---|---|
| | VOA+OA1(GRO) | | OA2 (DRO) | | | |

| 22. DISPOSITION OF HOLE | BACKFILLED | MONITORING WELL | OTHER (SPECIFY) | 23. SIGNATURE OF INSPECTOR |
|---|---|---|---|---|
| | X | | | [signature] |

LOCATION SKETCH/COMMENTS

SCALE

PROJECT: Hydrant Fuel System Contamination Investigation

HOLE NO. LAFBHF-07

ENG FORM 5056-R, AUG 94

(Proponent: CECW-EG)

# HTRW DRILLING LOG (CONTINUATION SHEET)

HOLE NUMBER: LAFBHF-07

PROJECT: Hydrant Fuel System Contamination Investigation

INSPECTOR: R. Grabowski

SHEET 2 OF 2

| ELEV. (a) | DEPTH (b) | DESCRIPTION OF MATERIALS (c) | FIELD SCREENING RESULTS (d) | GEOTECH SAMPLE OR CORE BOX NO. (e) | ANALYTICAL SAMPLE NO. (f) | BLOW COUNT (g) | REMARKS (h) |
|---|---|---|---|---|---|---|---|
| | | Topsoil | | | | | Run #1- 1251 |
| | 1 | Poorly Graded Sand (SP)- gray, moist, fine Sand with occasional gravel. | 7 ppm | | | | Recovery- 1.5' |
| | 2 | Silty Sand (SM)- gray to brown, moist, predom fine sand with occas. gravel, low plasticity fines. | | | LAFBHF-07-410 | | Run #2- 1259 Recovery- 1.5' |
| | 3 | Sandy Lean Clay (CL)- gray to brown, moist, med. plast fines, coarse fraction fine sand | 6 ppm | | | | |
| | 4 | Silty Sand (SM)- see description above | | | | | |
| | | Poorly Graded Sand (SP)- mottled gray, brown, wet, fine Sand. | | | | | Run #3- 1309 Recovery- 2.0' |
| | 5 | | 6 ppm | | | | |
| | 6 | | | | | | Run #4- 1314 Recovery- 2.0' |
| | 7 | | 9 ppm | | | | |
| | 8 | Bottom of boring | 8.0 ft. | | | | |

PROJECT: Hydrant Fuel System Contamination Investigation

HOLE NO. LAFBHF-07

ENG FORM 5056A-R, AUG 94

(Proponent: CECW-EG)

# HTRW DRILLING LOG

| | | |
|---|---|---|
| DISTRICT: Omaha | | HOLE NUMBER: LAFB1HF-08 |
| 1. COMPANY NAME: USACE | 2. DRILL SUBCONTRACTOR: N/A | SHEET 1 OF SHEETS 2 |
| 3. PROJECT: Hydrant Fuel System Contamination Investigation | 4. LOCATION: Langley AFB, VA | |
| 5. NAME OF DRILLER: Joe Morrissey | 6. MANUFACTURER'S DESIGNATION OF DRILL: Simco Earthprobe 200 | |
| 7. SIZES AND TYPES OF DRILLING AND SAMPLING EQUIPMENT: Direct-push rig with 2-inch steel split-spoons to bottom of boring. | 8. HOLE LOCATION | |
| | 9. SURFACE ELEVATION | |
| | 10. DATE STARTED: 5/4/04 | 11. DATE COMPLETED: 5/4/04 |
| 12. OVERBURDEN THICKNESS: N/A | 15. DEPTH GROUNDWATER ENCOUNTERED | |
| 13. DEPTH DRILLED INTO ROCK: N/A | 16. DEPTH TO WATER AND ELAPSED TIME AFTER DRILLING COMPLETED: 3.8 ft. immediately after drilling complete. | |
| 14. TOTAL DEPTH OF HOLE: 8.0 ft. | 17. OTHER WATER LEVEL MEASUREMENTS (SPECIFY) | |

| 18. GEOTECHNICAL SAMPLES | DISTURBED | UNDISTURBED | 19. TOTAL NUMBER OF CORE BOXES |
|---|---|---|---|
| | | | |

| 20. SAMPLES FOR CHEMICAL ANALYSIS | VOC | METALS | OTHER (SPECIFY) | OTHER (SPECIFY) | OTHER (SPECIFY) | 21. TOTAL CORE RECOVERY % |
|---|---|---|---|---|---|---|
| | VOA+OA1(GRD) | | OAZ(DRO) | | | |

| 22. DISPOSITION OF HOLE | BACKFILLED | MONITORING WELL | OTHER (SPECIFY) | 23. SIGNATURE OF INSPECTOR |
|---|---|---|---|---|
| | X | | | [signature] |

LOCATION SKETCH/COMMENTS

SCALE

PROJECT: Hydrant Fuel System Contamination Investigation HOLE NO. LAFB1HF-08

ENG FORM 5056-R, AUG 94 (Proponent: CECW-EG)

# HTRW DRILLING LOG (CONTINUATION SHEET)

HOLE NUMBER: LAFBHF-08

PROJECT: Hydrant Fuel System Contamination Investigation

INSPECTOR: R. Grabowski

SHEET 2 OF 2 SHEETS

| ELEV. (a) | DEPTH (b) | DESCRIPTION OF MATERIALS (c) | FIELD SCREENING RESULTS (d) | GEOTECH SAMPLE OR CORE BOX NO. (e) | ANALYTICAL SAMPLE NO. (f) | BLOW COUNT (g) | REMARKS (h) |
|---|---|---|---|---|---|---|---|
| | | Topsoil | | | | | Run #1- 1059 |
| | | Poorly Graded Sand (SP)- light to dark brown, wet, fine sand with occas. gravel | | | | | Recovery - 1.6' |
| | 1 | Sandy Lean Clay (CL) - gray to brown, moist, moderate plasticity fines, coarse fraction predom. fine sand. | 5 ppm | | | | |
| | 2 | | | | LAFBHF-08-4.0 | | Run #2- 1104 |
| | | | | | | | Recovery- 1.6' |
| | 3 | Poorly Graded Gravel (GP) | | | | | |
| | | Silty Sand (SM) - gray to brown, wet, predom. fine sand with occas. gravel. | 6 ppm | | | | |
| | 4 | | | | | | Run #3- 1114 |
| | | | | | | | Recovery- 1.9' |
| | 5 | Poorly Graded Sand (SP) - gray to brown, wet, predom. fine sand. | 8 ppm | | | | |
| | 6 | | | | | | Run #4- 1119 |
| | | | | | | | Recovery- 2.0' |
| | 7 | | 6 ppm | | | | |
| | 8 | Bottom of boring | 8.0 ft. | | | | |

PROJECT: Hydrant Fuel System Contamination Investigation

HOLE NO. LAFBHF-08

ENG FORM 5056A-R, AUG 94 (Proponent: CECW-EG)

# HTRW DRILLING LOG

| | | |
|---|---|---|
| DISTRICT: Omaha | HOLE NUMBER: LAFBHF-09 | |
| 1. COMPANY NAME: USACE | 2. DRILL SUBCONTRACTOR: N/A | SHEET 1 OF 3 SHEETS |
| 3. PROJECT: Hydrant Fuel System Contamination Investigation | 4. LOCATION: Langley AFB, VA | |
| 5. NAME OF DRILLER: Joe Morrissey | 6. MANUFACTURER'S DESIGNATION OF DRILL: Simco Earthprobe 200 | |
| 7. SIZES AND TYPES OF DRILLING AND SAMPLING EQUIPMENT: Direct-push rig with 2-inch steel split-spoons to 8 feet, then 1-inch steel split-spoons to bottom of boring | 8. HOLE LOCATION | |
| | 9. SURFACE ELEVATION | |
| | 10. DATE STARTED: 5/4/04 | 11. DATE COMPLETED: 5/4/04 |
| 12. OVERBURDEN THICKNESS: N/A | 15. DEPTH GROUNDWATER ENCOUNTERED | |
| 13. DEPTH DRILLED INTO ROCK: N/A | 16. DEPTH TO WATER AND ELAPSED TIME AFTER DRILLING COMPLETED: 3.9 ft. immediately after drilling complete | |
| 14. TOTAL DEPTH OF HOLE: 16.0 ft. | 17. OTHER WATER LEVEL MEASUREMENTS (SPECIFY) | |

| 18. GEOTECHNICAL SAMPLES | DISTURBED | UNDISTURBED | 19. TOTAL NUMBER OF CORE BOXES |
|---|---|---|---|
| | X | | |

| 20. SAMPLES FOR CHEMICAL ANALYSIS | VOC | METALS | OTHER (SPECIFY) | OTHER (SPECIFY) | OTHER (SPECIFY) | 21. TOLAL CORE RECOVERY % |
|---|---|---|---|---|---|---|
| | VOA+DRO(GRO) | | | OA2(DRO) | | |

| 22. DISPOSITION OF HOLE | BACKFILLED | MONITORING WELL | OTHER (SPECIFY) | 23. SIGNATURE OF INSPECTOR |
|---|---|---|---|---|
| | X | | | [illegible] |

LOCATION SKETCH/COMMENTS | SCALE

PROJECT: Hydrant Fuel System Contamination Investigation | HOLE NO. LAFBHF-09

ENG FORM 5056-R, AUG 94 (Proponent: CECW-EG)

# HTRW DRILLING LOG (CONTINUATION SHEET)

HOLE NUMBER: LAFB/HF-09

PROJECT: Hydrant Fuel System Contamination Investigation

INSPECTOR: R. Grabowski

SHEET 2 OF 3

| ELEV. (a) | DEPTH (b) | DESCRIPTION OF MATERIALS (c) | FIELD SCREENING RESULTS (d) | GEOTECH SAMPLE OR CORE BOX NO. (e) | ANALYTICAL SAMPLE NO. (f) | BLOW COUNT (g) | REMARKS (h) |
|---|---|---|---|---|---|---|---|
| | | Topsoil | | | | | Run #1 - 0830 |
| | 1 | Poorly Graded Sand (SP) - gray to brown, moist, predom. fine Sand with occasional gravel. | < 1 ppm | | | | Recovery - 1.6' |
| | 2 | | | | LAFB/HF-09-4.0 | | Run #2 - 0833 |
| | 3 | | < 1 ppm | | | | Recovery - 1.5' |
| | | Silty Sand (SM) - gray, wet, predom. fine Sand, low to mod. plasticity fines. | | | | | |
| | 4 | | | | | | Run #3 - 0847 |
| | 5 | | 4 ppm | Bulk Density Sample | | | Recovery - 1.7' |
| | | Same as above. Lenses of poorly graded Sand 0.1 to 0.3' thick. | | | | | |
| | 6 | | | | | | Run #4 - 0855 |
| | | Poorly Graded Sand (SP) - greenish gray, wet, predom. fine Sand | | | | | Recovery - 2.0' |
| | 7 | | 3 ppm | D-11 | | | |
| | 8 | | | | | | Run #5 - 0916 |
| | 9 | | 6 ppm | | | | Recovery - 1.1' |
| | 10 | | | | | | |

PROJECT: Hydrant Fuel System Contamination Investigation

HOLE NO. LAFB/HF-09

ENG FORM 5056A-R, AUG 94

(Proponent: CECW-EG)

# HTRW DRILLING LOG (CONTINUATION SHEET)

HOLE NUMBER: LAFBHF-09

PROJECT: Hydrant Fuel System Contamination Investigation

INSPECTOR: R. Grabowski

SHEET 3 OF 3 SHEETS

| ELEV. (a) | DEPTH (b) | DESCRIPTION OF MATERIALS (c) | FIELD SCREENING RESULTS (d) | GEOTECH SAMPLE OR CORE BOX NO. (e) | ANALYTICAL SAMPLE NO. (f) | BLOW COUNT (g) | REMARKS (h) |
|---|---|---|---|---|---|---|---|
| | 11 | Same as above, Saturated, Some fossiliferous hash. | 6 ppm | | | | Run #6 - 0929 Recovery - 2.0' |
| | 12 | | | | | | Run #7 - 0942 Recovery - 2.0' |
| | 13 | | 6 ppm | | | | |
| | 14 | | | | | | Run #8 - 0950 Recovery - 2.0' |
| | 15 | | 5 ppm | | | | |
| | 16 | Bottom of boring 16.0 ft. | | | | | |

PROJECT: Hydrant Fuel System Contamination Investigation HOLE NO. LAFBHF-09

ENG FORM 5056A-R, AUG 94 (Proponent: CECW-EG)

# HTRW DRILLING LOG

| | | |
|---|---|---|
| DISTRICT: Omaha | | HOLE NUMBER: LAFBHF-10 |
| 1. COMPANY NAME: USACE | 2. DRILL SUBCONTRACTOR: N/A | SHEET 1 OF 2 SHEETS |
| 3. PROJECT: Hydrant Fuel System Contamination Investigation | 4. LOCATION: Langley AFB, VA | |
| 5. NAME OF DRILLER: Joe Morrissey | 6. MANUFACTURER'S DESIGNATION OF DRILL: Simco Earthprobe 200 | |
| 7. SIZES AND TYPES OF DRILLING AND SAMPLING EQUIPMENT: Direct-push rig with 2-inch steel split-spoons to bottom of boring. | 8. HOLE LOCATION | |
| | 9. SURFACE ELEVATION | |
| | 10. DATE STARTED: 4/30/04 | 11. DATE COMPLETED: 4/30/04 |
| 12. OVERBURDEN THICKNESS: N/A | 15. DEPTH GROUNDWATER ENCOUNTERED | |
| 13. DEPTH DRILLED INTO ROCK: N/A | 16. DEPTH TO WATER AND ELAPSED TIME AFTER DRILLING COMPLETED: 2.7 ft. immediately after drilling complete | |
| 14. TOTAL DEPTH OF HOLE: 8.0 ft | 17. OTHER WATER LEVEL MEASUREMENTS (SPECIFY) | |

| 18. GEOTECHNICAL SAMPLES | DISTURBED | UNDISTURBED | 19. TOTAL NUMBER OF CORE BOXES |
|---|---|---|---|
| | | | |

| 20. SAMPLES FOR CHEMICAL ANALYSIS | VOC | METALS | OTHER (SPECIFY) | OTHER (SPECIFY) | OTHER (SPECIFY) | 21. TOTAL CORE RECOVERY % |
|---|---|---|---|---|---|---|
| | VOA10A1(GRO) | | OA2(DRO) | | | |

| 22. DISPOSITION OF HOLE | BACKFILLED | MONITORING WELL | OTHER (SPECIFY) | 23. SIGNATURE OF INSPECTOR |
|---|---|---|---|---|
| | X | Temporary | | [illegible] |

LOCATION SKETCH/COMMENTS

SCALE

PROJECT: Hydrant Fuel System Contamination Investigation HOLE NO. LAFBHF-10

ENG FORM 5056-R, AUG 94 (Proponent: CECW-EG)

# HTRW DRILLING LOG (CONTINUATION SHEET)

HOLE NUMBER: LAFBHF-10

PROJECT: Hydrant Fuel System Contamination Investigation

INSPECTOR: R. Grabowski

SHEET 2 OF 2 SHEETS

| ELEV. (a) | DEPTH (b) | DESCRIPTION OF MATERIALS (c) | FIELD SCREENING RESULTS (d) | GEOTECH SAMPLE OR CORE BOX NO. (e) | ANALYTICAL SAMPLE NO. (f) | BLOW COUNT (g) | REMARKS (h) |
|---|---|---|---|---|---|---|---|
| | | Topsoil | | | | | Run #1- 1407 |
| | | Poorly Graded Sand (SP) - gray, moist, predom. fine sand with occas. gravel | | | | | Recovery - 1.9' |
| | 1 | Sandy Lean Clay (CL) - gray to brown, moist, mod. plasticity fines, coarse fraction fine sand. | 6 ppm | | | | |
| | 2 | | | | LAFBHF-10-4.0 | | Run #2- 1411 |
| | 3 | | 6 ppm | | | | Recovery - 2.0' |
| | 4 | | | | | | |
| | | Poorly Graded Sand (SP) - gray to brown, wet, fine grained sand with occas. gravel, petroleum odor. | | | | | Run #3- 1419 |
| | 5 | | 80 ppm | | | | Recovery - 2.0' |
| | 6 | | | | | | Run #4- 1428 |
| | | Same as above, gray with fossils at 7.4' bgs. | | | | | Recovery - 2.0' |
| | 7 | | 120 ppm | | | | |
| | 8 | Bottom of boring 8.0 ft. | | | | | |

PROJECT: Hydrant Fuel System Contamination Investigation

HOLE NO. LAFBHF-10

ENG FORM 5056A-R, AUG 94 (Proponent: CECW-EG)

# HTRW DRILLING LOG

| | | |
|---|---|---|
| DISTRICT: Omaha | | HOLE NUMBER: LAFB/HF-11 |
| 1. COMPANY NAME: USACE | 2. DRILL SUBCONTRACTOR: N/A | SHEET 1 OF 2 SHEETS |
| 3. PROJECT: Hydrant Fuel System Contamination Investigation | 4. LOCATION: Langley AFB, VA | |
| 5. NAME OF DRILLER: Joe Morrissey | 6. MANUFACTURER'S DESIGNATION OF DRILL: Simco Earthprobe 200 | |
| 7. SIZES AND TYPES OF DRILLING AND SAMPLING EQUIPMENT: Direct-push rig with 2-inch Steel split-spoons to bottom of boring. | 8. HOLE LOCATION | |
| | 9. SURFACE ELEVATION | |
| | 10. DATE STARTED: 4/30/04 | 11. DATE COMPLETED: 4/30/04 |
| 12. OVERBURDEN THICKNESS: N/A | 15. DEPTH GROUNDWATER ENCOUNTERED | |
| 13. DEPTH DRILLED INTO ROCK: N/A | 16. DEPTH TO WATER AND ELAPSED TIME AFTER DRILLING COMPLETED: 3.0 ft, immediately after drilling complete | |
| 14. TOTAL DEPTH OF HOLE: 8.0 ft | 17. OTHER WATER LEVEL MEASUREMENTS (SPECIFY) | |

| 18. GEOTECHNICAL SAMPLES | DISTURBED | UNDISTURBED | 19. TOTAL NUMBER OF CORE BOXES | | | |
|---|---|---|---|---|---|---|
| 20. SAMPLES FOR CHEMICAL ANALYSIS | VOC: VOA+OA1(GRO) | METALS | OTHER (SPECIFY): OA2 (DRO) | OTHER (SPECIFY) | OTHER (SPECIFY) | 21. TOTAL CORE RECOVERY % |
| 22. DISPOSITION OF HOLE | BACKFILLED: X | MONITORING WELL | OTHER (SPECIFY) | 23. SIGNATURE OF INSPECTOR: [signature] | | |

LOCATION SKETCH/COMMENTS

SCALE

PROJECT: Hydrant Fuel System Contamination Investigation HOLE NO. LAFB/HF-11

ENG FORM 5056-R, AUG 94 (Proponent: CECW-EG)

# HTRW DRILLING LOG (CONTINUATION SHEET)

HOLE NUMBER: LAFBHF-11

PROJECT: Hydrant Fuel System Contamination Investigation

INSPECTOR: R. Grabowski

SHEET 2 OF 2 SHEETS

| ELEV. (a) | DEPTH (b) | DESCRIPTION OF MATERIALS (c) | FIELD SCREENING RESULTS (d) | GEOTECH SAMPLE OR CORE BOX NO. (e) | ANALYTICAL SAMPLE NO. (f) | BLOW COUNT (g) | REMARKS (h) |
|---|---|---|---|---|---|---|---|
| | | Topsoil | | | | | Run #1- 1320 Recovery- 1.9' |
| | 1 | Poorly Graded Sand (SP)- brown, moist, predom. fine Sand with occas. gravel | <1 ppm | | | | |
| | | Sandy Lean Clay (CL)- gray to brown, moist, med. plasticity fines, Coarse fraction fine Sand. | | | | | |
| | 2 | | | | LAFBHF-11-4.0 | | Run #2- 1323 Recovery- 2.0' |
| | 3 | | <1 ppm | | | | |
| | 4 | | | | | | Run #3- 1332 Recovery- 1.9' |
| | 5 | Poorly Graded Sand (SP)- gray to brown, wet, fine Sand. | 6 ppm | | | | |
| | 6 | | | | | | Run #4- 1334 Recovery- 1.6' |
| | | Same as above, fossil hash at 7.1' bgs. | | | | | |
| | 7 | | 7 ppm | | | | |
| | 8 | Bottom of boring | 8.0 ft. | | | | |

PROJECT: Hydrant Fuel System Contamination Investigation

HOLE NO. LAFBHF-11

ENG FORM 5056A-R, AUG 94 (Proponent: CECW-EG)

# HTRW DRILLING LOG

| | | |
|---|---|---|
| DISTRICT: Omaha | | HOLE NUMBER: LAFBHF-12 |
| 1. COMPANY NAME: USACE | 2. DRILL SUBCONTRACTOR: N/A | SHEET 1 OF 2 SHEETS |
| 3. PROJECT: Hydrant Fuel System Contamination Investigation | 4. LOCATION: Langley AFB, VA | |
| 5. NAME OF DRILLER: Joe Morrissey | 6. MANUFACTURER'S DESIGNATION OF DRILL: Simco Earthprobe 200 | |
| 7. SIZES AND TYPES OF DRILLING AND SAMPLING EQUIPMENT: Direct-push rig with 2-inch steel split-spoons to bottom of boring | 8. HOLE LOCATION | |
| | 9. SURFACE ELEVATION | |
| | 10. DATE STARTED: 4/30/04 | 11. DATE COMPLETED: 4/30/04 |
| 12. OVERBURDEN THICKNESS: N/A | 15. DEPTH GROUNDWATER ENCOUNTERED | |
| 13. DEPTH DRILLED INTO ROCK: N/A | 16. DEPTH TO WATER AND ELAPSED TIME AFTER DRILLING COMPLETED: 2.5 ft. immediately after drilling complete | |
| 14. TOTAL DEPTH OF HOLE: 8.0 ft. | 17. OTHER WATER LEVEL MEASUREMENTS (SPECIFY) | |

| 18. GEOTECHNICAL SAMPLES | DISTURBED | UNDISTURBED | 19. TOTAL NUMBER OF CORE BOXES |
|---|---|---|---|
| | X | | |

| 20. SAMPLES FOR CHEMICAL ANALYSIS | VOC | METALS | OTHER (SPECIFY) | OTHER (SPECIFY) | OTHER (SPECIFY) | 21. TOTAL CORE RECOVERY % |
|---|---|---|---|---|---|---|
| | VOA+OA1(GRO) | | OA2 (DRO) | | | |

| 22. DISPOSITION OF HOLE | BACKFILLED | MONITORING WELL | OTHER (SPECIFY) | 23. SIGNATURE OF INSPECTOR |
|---|---|---|---|---|
| | X | | | [signature] |

LOCATION SKETCH/COMMENTS | SCALE

PROJECT: Hydrant Fuel System Contamination Investigation | HOLE NO. LAFBHF-12

ENG FORM 5056-R, AUG 94 (Proponent: CECW-EG)

# HTRW DRILLING LOG (CONTINUATION SHEET)

HOLE NUMBER: LAFBHF-12

PROJECT: Hydrant Fuel System Contamination Investigation

INSPECTOR: R. Grabowski

SHEET 2 OF 2 SHEETS

| ELEV. (a) | DEPTH (b) | DESCRIPTION OF MATERIALS (c) | FIELD SCREENING RESULTS (d) | GEOTECH SAMPLE OR CORE BOX NO. (e) | ANALYTICAL SAMPLE NO. (f) | BLOW COUNT (g) | REMARKS (h) |
|---|---|---|---|---|---|---|---|
| | | Topsoil | | | | | Run #1 - 1145 |
| | | Sandy Silt (ML) - brown, moist, low plasticity fines, coarse fraction fine sand | | | | | Recovery - 1.8' |
| | 1 | Sandy Lean Clay (CL) - gray to brown, moist, med plasticity fines, coarse fraction fine sand. | <1 ppm | | | | |
| | 2 | | | | LAFBHF-12-4.0 | | Run #2 - 1153 |
| | | Poorly Graded Sand with Silt (SP) - gray to brown, wet, fine sand, low plasticity fines. | | | | | Recovery - 1.8' |
| | 3 | | <1 ppm | | | | |
| | 4 | | | | | | Run #3 - 1203 |
| | | | | | | | Recovery - 1.8' |
| | 5 | | 2 ppm | | | | |
| | | Poorly Graded Sand (SP) - brown, wet, fine sand with some fossil pieces. | | | | | |
| | 6 | | | | | | Run #4 - 1210 |
| | | | | | | | Recovery - 2.0' |
| | 7 | | <1 ppm | D-10 | | | |
| | 8 | Bottom of boring | 8.0 ft. | | | | |

PROJECT: Hydrant Fuel System Contamination Investigation

HOLE NO. LAFBHF-12

ENG FORM 5056A-R, AUG 94 (Proponent: CECW-EG)

# HTRW DRILLING LOG

| | | |
|---|---|---|
| DISTRICT: Omaha | | HOLE NUMBER: LAFB HF-13 |
| 1. COMPANY NAME: USACE | 2. DRILL SUBCONTRACTOR: N/A | SHEET 1 OF 2 SHEETS |
| 3. PROJECT: Hydrant Fuel System Contamination Investigation | 4. LOCATION: Langley AFB, VA | |
| 5. NAME OF DRILLER: Joe Morrissey | 6. MANUFACTURER'S DESIGNATION OF DRILL: Simco Earthprobe 200 | |
| 7. SIZES AND TYPES OF DRILLING AND SAMPLING EQUIPMENT: Direct-push rig with 2-inch Steel Split-Spoons to bottom of boring | 8. HOLE LOCATION | |
| | 9. SURFACE ELEVATION | |
| | 10. DATE STARTED: 4/30/04 | 11. DATE COMPLETED: 4/30/04 |
| 12. OVERBURDEN THICKNESS: N/A | 15. DEPTH GROUNDWATER ENCOUNTERED | |
| 13. DEPTH DRILLED INTO ROCK: N/A | 16. DEPTH TO WATER AND ELAPSED TIME AFTER DRILLING COMPLETED: 5.5 ft. immediately after drilling complete | |
| 14. TOTAL DEPTH OF HOLE: 8.0 ft. | 17. OTHER WATER LEVEL MEASUREMENTS (SPECIFY) | |

| 18. GEOTECHNICAL SAMPLES | DISTURBED | UNDISTURBED | 19. TOTAL NUMBER OF CORE BOXES |
|---|---|---|---|
| | | | |

| 20. SAMPLES FOR CHEMICAL ANALYSIS | VOC | METALS | OTHER (SPECIFY) | OTHER (SPECIFY) | OTHER (SPECIFY) | 21. TOLAL CORE RECOVERY % |
|---|---|---|---|---|---|---|
| | VOA+OA1(GRO) | | OA2 (DRO) | | | |

| 22. DISPOSITION OF HOLE | BACKFILLED | MONITORING WELL | OTHER (SPECIFY) | 23. SIGNATURE OF INSPECTOR |
|---|---|---|---|---|
| | X | | | [signature] |

LOCATION SKETCH/COMMENTS | SCALE

PROJECT: Hydrant Fuel System Contamination Investigation | HOLE NO. LAFB HF-13

ENG FORM 5056-R, AUG 94

(Proponent: CECW-EG)

# HTRW DRILLING LOG (CONTINUATION SHEET)

HOLE NUMBER: LAFBHF-13

PROJECT: Hydrant Fuel System Contamination Investigation

INSPECTOR: R. Grabowski

SHEET 2 OF 2 SHEETS

| ELEV. (a) | DEPTH (b) | DESCRIPTION OF MATERIALS (c) | FIELD SCREENING RESULTS (d) | GEOTECH SAMPLE OR CORE BOX NO. (e) | ANALYTICAL SAMPLE NO. (f) | BLOW COUNT (g) | REMARKS (h) |
|---|---|---|---|---|---|---|---|
| | | Top Soil | | | | | |
| | | Sandy Silt (ML) - brown, moist, low plasticity fines, coarse fraction predom. fine sand with occasl. gravel. | | | | | |
| | 1 | Poorly Graded Sand (SP) - gray, moist, fine sand. | < 1 ppm | | | | Run #1 - 1054 Recovery - 1.7' |
| | 2 | Poorly Graded Sand with Silt (SP) - brown, moist, fine sand, low plast. fines. | | | | | |
| | | Sandy Lean Clay (CL) - brown, moist, mod. plasticity fines, coarse fraction fine sand. | | | LAFBHF-13-4.0 | | Run #2 - 1059 Recovery - 2.0' |
| | 3 | | < 1 ppm | | | | |
| | 4 | | | | | | |
| | | Same as above, wet. | | | | | Run #3 - 1109 Recovery - 2.0' |
| | 5 | | < 1 ppm | | | | |
| | 6 | Poorly Graded Sand (SP) - brown, wet to saturated, fine sand with fossiliferous hash. | | | | | Run #4 - 1112 Recovery - 1.7' |
| | 7 | | < 1 ppm | | | | |
| | 8 | Bottom of boring | 8.0 ft. | | | | |

PROJECT: Hydrant Fuel System Contamination Investigation

HOLE NO. LAFBHF-13

ENG FORM 5056A-R, AUG 94

(Proponent: CECW-EG)

# HTRW DRILLING LOG

| | | |
|---|---|---|
| DISTRICT: Omaha | | HOLE NUMBER: LAFBHF-14 |
| 1. COMPANY NAME: USACE | 2. DRILL SUBCONTRACTOR: N/A | SHEET 1 OF 3 SHEETS |
| 3. PROJECT: Hydrant Fuel System Contamination Investigation | 4. LOCATION: Langley AFB, VA | |
| 5. NAME OF DRILLER: Joe Morrissey | 6. MANUFACTURER'S DESIGNATION OF DRILL: Simco Earthprobe 200 | |
| 7. SIZES AND TYPES OF DRILLING AND SAMPLING EQUIPMENT: Direct-push rig with 2-inch steel split-spoons to bottom of boring. | 8. HOLE LOCATION | |
| | 9. SURFACE ELEVATION | |
| | 10. DATE STARTED: 4/29/04 | 11. DATE COMPLETED: 4/29/04 |
| 12. OVERBURDEN THICKNESS: N/A | 15. DEPTH GROUNDWATER ENCOUNTERED | |
| 13. DEPTH DRILLED INTO ROCK: N/A | 16. DEPTH TO WATER AND ELAPSED TIME AFTER DRILLING COMPLETED: 2.9 ft. immediately after drilling complete | |
| 14. TOTAL DEPTH OF HOLE: 10.0 ft. | 17. OTHER WATER LEVEL MEASUREMENTS (SPECIFY) | |

| 18. GEOTECHNICAL SAMPLES | DISTURBED | UNDISTURBED | 19. TOTAL NUMBER OF CORE BOXES |
|---|---|---|---|
| | X | | |

| 20. SAMPLES FOR CHEMICAL ANALYSIS | VOC | METALS | OTHER (SPECIFY) | OTHER (SPECIFY) | OTHER (SPECIFY) | 21. TOTAL CORE RECOVERY % |
|---|---|---|---|---|---|---|
| | VOA10A1(GRO) | | OA2(DRO) | | | |

| 22. DISPOSITION OF HOLE | BACKFILLED | MONITORING WELL | OTHER (SPECIFY) | 23. SIGNATURE OF INSPECTOR |
|---|---|---|---|---|
| | X | | | [signature] |

LOCATION SKETCH/COMMENTS

SCALE

PROJECT: Hydrant Fuel System Contamination Investigation

HOLE NO. LAFBHF-14

ENG FORM 5056-R, AUG 94

(Proponent: CECW-EG)

# HTRW DRILLING LOG (CONTINUATION SHEET)

HOLE NUMBER: LAFBHF-14

PROJECT: Hydrant Fuel System Contamination Investigation

INSPECTOR: R. Grabowski

SHEET 2 OF 2 SHEETS

| ELEV. (a) | DEPTH (b) | DESCRIPTION OF MATERIALS (c) | FIELD SCREENING RESULTS (d) | GEOTECH SAMPLE OR CORE BOX NO. (e) | ANALYTICAL SAMPLE NO. (f) | BLOW COUNT (g) | REMARKS (h) |
|---|---|---|---|---|---|---|---|
| | | Topsoil | | | | | |
| | 1 | Sandy Lean Clay (CL) - gray to brown, moist, med. plasticity fines, coarse fraction predom. fine sand. | 2 ppm | | | | Run #1 - 1634 Recovery - 1.6' |
| | 2 | | | | LAFBHF-14-4.0 | | Run #2 - 1641 Recovery - 2.0' |
| | 3 | Silty Sand (SM) - brown, moist, fine Sand, low plast. fines. | 2 ppm | | | | |
| | 4 | | | | | | |
| | 5 | Poorly Graded Sand with Silt (SP) - brown, saturated, fine sand, no to low plast. fines. | 1 ppm | | | | Run #3 - 1650 Recovery - 2.0' |
| | 6 | | | | | | |
| | 7 | Same as above, fossiliferous hash at 6.2', gray at 6.8' | 1 ppm | D-9 | | | Run #4 - 1701 Recovery - 2.0' |
| | 8 | | | | | | Run #5 - 1706 Recovery - 2.0' |
| | 9 | | 1 ppm | | | | |
| | 10 | Bottom of boring | 10.0 ft. | | | | |

PROJECT: Hydrant Fuel System Contamination Investigation

HOLE NO. LAFBHF-14

ENG FORM 5056A-R, AUG 94 (Proponent: CECW-EG)

# HTRW DRILLING LOG

| | | |
|---|---|---|
| DISTRICT: Omaha | | HOLE NUMBER: LAFBHF-15 |
| 1. COMPANY NAME: USACE | 2. DRILL SUBCONTRACTOR: N/A | SHEET 1 OF 3 SHEETS |
| 3. PROJECT: Hydrant Fuel System Contamination Investigation | 4. LOCATION: Langley AFB, VA | |
| 5. NAME OF DRILLER: Joe Morrissey | 6. MANUFACTURER'S DESIGNATION OF DRILL: Simco Earthprobe 200 | |
| 7. SIZES AND TYPES OF DRILLING AND SAMPLING EQUIPMENT: Direct-push rig with 2-inch steel split-spoons to 4 feet then 1-inch steel split-spoons to bottom of boring. | 8. HOLE LOCATION | |
| | 9. SURFACE ELEVATION | |
| | 10. DATE STARTED: 4/30/04 | 11. DATE COMPLETED: 4/30/04 |
| 12. OVERBURDEN THICKNESS: N/A | 15. DEPTH GROUNDWATER ENCOUNTERED | |
| 13. DEPTH DRILLED INTO ROCK: N/A | 16. DEPTH TO WATER AND ELAPSED TIME AFTER DRILLING COMPLETED: Not measured. | |
| 14. TOTAL DEPTH OF HOLE: 12.0 ft | 17. OTHER WATER LEVEL MEASUREMENTS (SPECIFY) | |

| 18. GEOTECHNICAL SAMPLES | DISTURBED | UNDISTURBED | 19. TOTAL NUMBER OF CORE BOXES |
|---|---|---|---|
| | | | |

| 20. SAMPLES FOR CHEMICAL ANALYSIS | VOC | METALS | OTHER (SPECIFY) | OTHER (SPECIFY) | OTHER (SPECIFY) | 21. TOTAL CORE RECOVERY % |
|---|---|---|---|---|---|---|
| | VOA (GRO) | | OA2 (DRO) | - | | |

| 22. DISPOSITION OF HOLE | BACKFILLED | MONITORING WELL | OTHER (SPECIFY) | 23. SIGNATURE OF INSPECTOR |
|---|---|---|---|---|
| | X | | | [signature] |

LOCATION SKETCH/COMMENTS | SCALE

PROJECT: Hydrant Fuel System Contamination Investigation | HOLE NO. LAFBHF-15

ENG FORM 5056-R, AUG 94 (Proponent: CECW-EG)

# HTRW DRILLING LOG (CONTINUATION SHEET)

HOLE NUMBER: LAFBHF-15

PROJECT: Hydrant Fuel System Contamination Investigation

INSPECTOR: R. Grabowski

SHEET 2 OF 3 SHEETS

| ELEV. (a) | DEPTH (b) | DESCRIPTION OF MATERIALS (c) | FIELD SCREENING RESULTS (d) | GEOTECH SAMPLE OR CORE BOX NO. (e) | ANALYTICAL SAMPLE NO. (f) | BLOW COUNT (g) | REMARKS (h) |
|---|---|---|---|---|---|---|---|
| | | Topsoil | | | | | Run #1 - 0858 |
| | | Silty Sand (SM) | | | | | Recovery - 1.6' |
| | 1 | Poorly Graded Sand (SP) - brown, moist, predom. fine sand with occas. gravel. | <1 ppm | | | | |
| | 2 | Sandy Lean Clay (CL) - brown, moist, medium plasticity fines, coarse fraction fine sand. | | | LAFBHF-15-4.0 | | Run #2 - 0906 Recovery - 2.0' |
| | 3 | | <1 ppm | | | | |
| | | Silty Sand (SM) | | | | | |
| | 4 | Poorly Graded Sand with Silt (SP) - brown, wet, fine sand, low to no plasticity fines. | | | | | Run #3 - 0919 Recovery - 1.2' |
| | 5 | | <1 ppm | | | | |
| | 6 | | | | | | Run #4 - 0927 Recovery - 1.0' |
| | 7 | | <1 ppm | | | | |
| | 8 | Poorly Graded Sand (SP) - gray to brown, wet, fine sand and fossiliferous hash. | | | | | Run #5 - 0935 Recovery - 2.0' |
| | 9 | | <1 ppm | | | | |
| | 10 | | | | | | |

PROJECT: Hydrant Fuel System Contamination Investigation

HOLE NO.: LAFBHF-15

ENG FORM 5056A-R, AUG 94 (Proponent: CECW-EG)

# HTRW DRILLING LOG (CONTINUATION SHEET)

HOLE NUMBER: LAFBHF-15

PROJECT: Hydrant Fuel System Contamination Investigation

INSPECTOR: R. Grabowski

SHEET 3 OF 3 SHEETS

| ELEV. (a) | DEPTH (b) | DESCRIPTION OF MATERIALS (c) | FIELD SCREENING RESULTS (d) | GEOTECH SAMPLE OR CORE BOX NO. (e) | ANALYTICAL SAMPLE NO. (f) | BLOW COUNT (g) | REMARKS (h) |
|---|---|---|---|---|---|---|---|
| | 11 | Same as above. | <1ppm | | | | Run #6 - 0950<br>Recovery - 2.0' |
| | 12 | Bottom of boring | 12.0 ft. | | | | |

PROJECT: Hydrant Fuel System Contamination Investigation

HOLE NO. LAFBHF-15

ENG FORM 5056A-R, AUG 94

(Proponent: CECW-EG)

# HTRW DRILLING LOG

| | | |
|---|---|---|
| DISTRICT: Omaha | | HOLE NUMBER: LAFBHF-16 |
| 1. COMPANY NAME: USACE | 2. DRILL SUBCONTRACTOR: N/A | SHEET 1 OF 2 SHEETS |
| 3. PROJECT: Hydrant Fuel System Contamination Investigation | 4. LOCATION: Langley AFB, VA | |
| 5. NAME OF DRILLER: Joe Morrissey | 6. MANUFACTURER'S DESIGNATION OF DRILL: Simco Earthprobe 200 | |
| 7. SIZES AND TYPES OF DRILLING AND SAMPLING EQUIPMENT: Direct-push rig with 2-inch steel split-spoons to bottom of boring. | 8. HOLE LOCATION | |
| | 9. SURFACE ELEVATION | |
| | 10. DATE STARTED: 4/29/04 | 11. DATE COMPLETED: 4/29/04 |
| 12. OVERBURDEN THICKNESS: N/A | 15. DEPTH GROUNDWATER ENCOUNTERED | |
| 13. DEPTH DRILLED INTO ROCK: N/A | 16. DEPTH TO WATER AND ELAPSED TIME AFTER DRILLING COMPLETED: Not measured. | |
| 14. TOTAL DEPTH OF HOLE: 8.0 ft. | 17. OTHER WATER LEVEL MEASUREMENTS (SPECIFY) | |

| 18. GEOTECHNICAL SAMPLES | DISTURBED | UNDISTURBED | 19. TOTAL NUMBER OF CORE BOXES |
|---|---|---|---|
| | | | |

| 20. SAMPLES FOR CHEMICAL ANALYSIS | VOC | METALS | OTHER (SPECIFY) | OTHER (SPECIFY) | OTHER (SPECIFY) | 21. TOTAL CORE RECOVERY % |
|---|---|---|---|---|---|---|
| | VOA (GRAB) | | OAZ (GRAB) | | | |

| 22. DISPOSITION OF HOLE | BACKFILLED | MONITORING WELL | OTHER (SPECIFY) | 23. SIGNATURE OF INSPECTOR |
|---|---|---|---|---|
| | X | | | [signature] |

LOCATION SKETCH/COMMENTS | SCALE

PROJECT: Hydrant Fuel System Contamination Investigation | HOLE NO.: LAFBHF-16

ENG FORM 5056-R, AUG 94 (Proponent: CECW-EG)

# HTRW DRILLING LOG (CONTINUATION SHEET)

HOLE NUMBER: LAFDHF-16

PROJECT: Hydrant Fuel System Contamination Investigation

INSPECTOR: R. Grabowski

SHEET 2 OF 2 SHEETS

| ELEV. (a) | DEPTH (b) | DESCRIPTION OF MATERIALS (c) | FIELD SCREENING RESULTS (d) | GEOTECH SAMPLE OR CORE BOX NO. (e) | ANALYTICAL SAMPLE NO. (f) | BLOW COUNT (g) | REMARKS (h) |
|---|---|---|---|---|---|---|---|
| | | Topsoil | | | | | |
| | 1 | Silty Sand (SM) - brown, moist, predom. fine sand with occas. gravel, low plasticity fines. | 6 ppm | | | | Run #1 - 1549 Recovery - 1.0' |
| | 2 | | | | LAFDHF-16-4.0 | | Run #2 - 1553 Recovery - 2.0' |
| | 3 | Same as above, gray to brown, wet. | 5 ppm | | | | |
| | 4 | | | | | | |
| | 5 | Poorly Graded Sand with Silt (SP) - brown, wet, fine sand, low plasticity fines. | 3 ppm | | | | Run #3 - 1601 Recovery - 1.5' |
| | 6 | | | | | | Run #4 - 1606 Recovery - 1.6' |
| | 7 | | 3 ppm | | | | |
| | 8 | Bottom of boring 8.0 ft. | | | | | |

PROJECT: Hydrant Fuel System Contamination Investigation

HOLE NO. LAFDHF-16

ENG FORM 5056A-R, AUG 94 (Proponent: CECW-EG)

# HTRW DRILLING LOG

| | | |
|---|---|---|
| DISTRICT: Omaha | | HOLE NUMBER: LAFBHF-17 |
| 1. COMPANY NAME: USACE | 2. DRILL SUBCONTRACTOR: N/A | SHEET 1 OF 2 SHEETS |
| 3. PROJECT: Hydrant Fuel System Contamination Investigation | 4. LOCATION: Langley AFB, VA | |
| 5. NAME OF DRILLER: Joe Morrissey | 6. MANUFACTURER'S DESIGNATION OF DRILL: Simco Earthprobe 200 | |
| 7. SIZES AND TYPES OF DRILLING AND SAMPLING EQUIPMENT: Direct-push rig with 2-inch steel split-spoons to bottom of boring | 8. HOLE LOCATION | |
| | 9. SURFACE ELEVATION | |
| | 10. DATE STARTED: 4/29/04 | 11. DATE COMPLETED: 4/29/04 |
| 12. OVERBURDEN THICKNESS: N/A | 15. DEPTH GROUNDWATER ENCOUNTERED | |
| 13. DEPTH DRILLED INTO ROCK: N/A | 16. DEPTH TO WATER AND ELAPSED TIME AFTER DRILLING COMPLETED: 2.3 ft. immediately after drilling complete | |
| 14. TOTAL DEPTH OF HOLE: 8.0 ft. | 17. OTHER WATER LEVEL MEASUREMENTS (SPECIFY) | |

| 18. GEOTECHNICAL SAMPLES | DISTURBED | UNDISTURBED | 19. TOTAL NUMBER OF CORE BOXES |
|---|---|---|---|
| | X | | |

| 20. SAMPLES FOR CHEMICAL ANALYSIS | VOC | METALS | OTHER (SPECIFY) | OTHER (SPECIFY) | OTHER (SPECIFY) | 21. TOTAL CORE RECOVERY % |
|---|---|---|---|---|---|---|
| | VOA (PORG) | | OA2 (DR) | | | |

| 22. DISPOSITION OF HOLE | BACKFILLED | MONITORING WELL | OTHER (SPECIFY) | 23. SIGNATURE OF INSPECTOR |
|---|---|---|---|---|
| | X | | | [signature] |

LOCATION SKETCH/COMMENTS

SCALE

PROJECT: Hydrant Fuel System Contamination Investigation HOLE NO. LAFBHF-17

ENG FORM 5056-R, AUG 94 (Proponent: CECW-EG)

# HTRW DRILLING LOG (CONTINUATION SHEET)

HOLE NUMBER: LAFBHF-17

PROJECT: Hydrant Fuel System Contamination Investigation

INSPECTOR: R. Grabowski

SHEET 2 OF 2 SHEETS

| ELEV. (a) | DEPTH (b) | DESCRIPTION OF MATERIALS (c) | FIELD SCREENING RESULTS (d) | GEOTECH SAMPLE OR CORE BOX NO. (e) | ANALYTICAL SAMPLE NO. (f) | BLOW COUNT (g) | REMARKS (h) |
|---|---|---|---|---|---|---|---|
| | | Topsoil | | | | | |
| | 1 | Sandy Lean Clay (CL)- brown, moist, mod. plasticity fines, coarse fraction predom. fine sand with occas. gravel. | 7 ppm | | | | Run #1 - 1435 Recovery - 1.7' |
| | 2 | | | | LAFBHF-17-4.0 | | Run #2 - 1444 Recovery - 1.7' |
| | 3 | Same as above, gray to brown. | 5 ppm | | | | |
| | 4 | | | | | | Run #3 - 1454 Recovery - 2.0' |
| | 5 | Silty Sand (SM)- brown, wet, fine sand and fossiliferous hash, low plasticity fines. | 5 ppm | | | | |
| | 6 | | | | | | Run #4 - 1501 Recovery - 2.0' |
| | 7 | | 2 ppm | D-8 | | | |
| | 8 | Bottom of boring | 8.0 ft. | | | | |

PROJECT: Hydrant Fuel System Contamination Investigation

HOLE NO. LAFBHF-17

ENG FORM 5056A-R, AUG 94 (Proponent: CECW-EG)

# HTRW DRILLING LOG

| | | |
|---|---|---|
| DISTRICT: Omaha | | HOLE NUMBER: LAFBHF-18 |
| 1. COMPANY NAME: USACE | 2. DRILL SUBCONTRACTOR: N/A | SHEET 1 OF 2 SHEETS |
| 3. PROJECT: Hydrant Fuel System Contamination Investigation | 4. LOCATION: Langley AFB, VA | |
| 5. NAME OF DRILLER: Joe Morrissey | 6. MANUFACTURER'S DESIGNATION OF DRILL: Simco Earthprobe 200 | |
| 7. SIZES AND TYPES OF DRILLING AND SAMPLING EQUIPMENT: Direct-push rig with 2-inch steel split-spoons to bottom of boring. | 8. HOLE LOCATION | |
| | 9. SURFACE ELEVATION | |
| | 10. DATE STARTED: 4/29/04 | 11. DATE COMPLETED: 4/29/04 |
| 12. OVERBURDEN THICKNESS: N/A | 15. DEPTH GROUNDWATER ENCOUNTERED | |
| 13. DEPTH DRILLED INTO ROCK: N/A | 16. DEPTH TO WATER AND ELAPSED TIME AFTER DRILLING COMPLETED: 3.8 ft. immediately after drilling complete | |
| 14. TOTAL DEPTH OF HOLE: 8.0 ft. | 17. OTHER WATER LEVEL MEASUREMENTS (SPECIFY) | |

| 18. GEOTECHNICAL SAMPLES | DISTURBED | UNDISTURBED | 19. TOTAL NUMBER OF CORE BOXES | | | |
|---|---|---|---|---|---|---|
| 20. SAMPLES FOR CHEMICAL ANALYSIS | VOC: VOA+OA(GRO) | METALS | OTHER (SPECIFY): OA2(DRO) | OTHER (SPECIFY) | OTHER (SPECIFY) | 21. TOTAL CORE RECOVERY % |
| 22. DISPOSITION OF HOLE | BACKFILLED: X | MONITORING WELL | OTHER (SPECIFY) | 23. SIGNATURE OF INSPECTOR: [signature] | | |

LOCATION SKETCH/COMMENTS

SCALE

PROJECT: Hydrant Fuel System Contamination Investigation HOLE NO. LAFBHF-18

ENG FORM 5056-R, AUG 94 (Proponent: CECW-EG)

# HTRW DRILLING LOG (CONTINUATION SHEET)

HOLE NUMBER: LAFBHF-18

PROJECT: Hydrant Fuel System Contamination Investigation

INSPECTOR: R. Grabowski

SHEET 2 OF 2 SHEETS

| ELEV. (a) | DEPTH (b) | DESCRIPTION OF MATERIALS (c) | FIELD SCREENING RESULTS (d) | GEOTECH SAMPLE OR CORE BOX NO. (e) | ANALYTICAL SAMPLE NO. (f) | BLOW COUNT (g) | REMARKS (h) |
|---|---|---|---|---|---|---|---|
| | | Topsoil | | | | | Run #1 - 1335 Recovery - 1.6' |
| | 1 | Sandy Lean Clay (CL) - brown, moist, mod. plasticity fines, coarse fraction predom. fine sand with occas. gravel | 5 ppm | | | | |
| | 2 | | | | LAFBHF-18-4.0 | | Run #2 - 1339 Recovery - 1.9' |
| | 3 | Silty Sand (SM) - brown, moist, predom. fine sand with fossil. hash, fines are low plasticity. | 5 ppm | | | | |
| | 4 | | | | | | Run #3 - 1349 Recovery - 2.0' |
| | 5 | Same as above, wet. | 6 ppm | | | | |
| | 6 | | | | | | Run #4 - 1359 Recovery - 2.0' |
| | 7 | | 2 ppm | | | | |
| | 8 | Bottom of boring | 8.0 ft. | | | | |

PROJECT: Hydrant Fuel System Contamination Investigation

HOLE NO. LAFBHF-18

ENG FORM 5056A-R, AUG 94 (Proponent: CECW-EG)

# HTRW DRILLING LOG

| | | |
|---|---|---|
| DISTRICT: Omaha | | HOLE NUMBER: LAFBHF-19 |
| 1. COMPANY NAME: USACE | 2. DRILL SUBCONTRACTOR: N/A | SHEET 1 OF 2 SHEETS |
| 3. PROJECT: Hydrant Fuel System Contamination Investigation | 4. LOCATION: Langley AFB, VA | |
| 5. NAME OF DRILLER: Joe Morrissey | 6. MANUFACTURER'S DESIGNATION OF DRILL: Simco Earthprobe 200 | |
| 7. SIZES AND TYPES OF DRILLING AND SAMPLING EQUIPMENT: Direct-push rig with 2-inch steel split-spoons to bottom of boring | 8. HOLE LOCATION | |
| | 9. SURFACE ELEVATION | |
| | 10. DATE STARTED: 4/29/04 | 11. DATE COMPLETED: 4/29/04 |
| 12. OVERBURDEN THICKNESS: N/A | 15. DEPTH GROUNDWATER ENCOUNTERED | |
| 13. DEPTH DRILLED INTO ROCK: N/A | 16. DEPTH TO WATER AND ELAPSED TIME AFTER DRILLING COMPLETED: 2.2ft. immediately after drilling complete | |
| 14. TOTAL DEPTH OF HOLE: 8.0 ft | 17. OTHER WATER LEVEL MEASUREMENTS (SPECIFY) | |

| 18. GEOTECHNICAL SAMPLES | DISTURBED | UNDISTURBED | 19. TOTAL NUMBER OF CORE BOXES |
|---|---|---|---|
| | X | | |

| 20. SAMPLES FOR CHEMICAL ANALYSIS | VOC | METALS | OTHER (SPECIFY) | OTHER (SPECIFY) | OTHER (SPECIFY) | 21. TOTAL CORE RECOVERY % |
|---|---|---|---|---|---|---|
| | VOA (FOA) (GRO) | | OA2 (DRO) | | | |

| 22. DISPOSITION OF HOLE | BACKFILLED | MONITORING WELL | OTHER (SPECIFY) | 23. SIGNATURE OF INSPECTOR |
|---|---|---|---|---|
| | X | | | [signature] |

LOCATION SKETCH/COMMENTS

SCALE

PROJECT: Hydrant Fuel System Contamination Investigation HOLE NO. LAFBHF-19

ENG FORM 5056-R, AUG 94 (Proponent: CECW-EG)

# HTRW DRILLING LOG (CONTINUATION SHEET)

HOLE NUMBER: LAFBHF-19

PROJECT: Hydrant Fuel System Contamination Investigation

INSPECTOR: R. Grabowski

SHEET 2 OF 2 SHEETS

| ELEV. (a) | DEPTH (b) | DESCRIPTION OF MATERIALS (c) | FIELD SCREENING RESULTS (d) | GEOTECH SAMPLE OR CORE BOX NO. (e) | ANALYTICAL SAMPLE NO. (f) | BLOW COUNT (g) | REMARKS (h) |
|---|---|---|---|---|---|---|---|
| | 1 | Topsoil<br>Sandy Lean Clay (CL) - brown, moist, med. plasticity fines, coarse fraction predom. fine sand with occas. gravel, fossil pieces at 1.3 ft. | 4 ppm | | | | Run #1 - 1156<br>Recovery - 1.7' |
| | 2 | | | | LAFBHF-19-4.0 | | Run #2 - 1204<br>Recovery - 1.9' |
| | 3 | Silty Sand (SM) - brown, wet, predom. fine sand with fossil hash, occasional gravel, low to no plasticity fines. | 3 ppm | | | | |
| | 4 | | | | | | Run #3 - 1214<br>Recovery - 2.0' |
| | 5 | | 4 ppm | | | | |
| | 6 | | | | | | Run #4 - 1225<br>Recovery - 2.0' |
| | 7 | | 5 ppm | D-7 | | | |
| | 8 | Bottom of boring | 8.0 ft. | | | | |

PROJECT: Hydrant Fuel System Contamination Investigation

HOLE NO. LAFBHF-19

ENG FORM 5056A-R, AUG 94 (Proponent: CECW-EG)

# HTRW DRILLING LOG (CONTINUATION SHEET)

HOLE NUMBER: LAFBHF-25

PROJECT: Hydrant Fuel System Contamination Investigation

INSPECTOR: R. Grabowski

SHEET 2 OF 2 SHEETS

| ELEV. (a) | DEPTH (b) | DESCRIPTION OF MATERIALS (c) | FIELD SCREENING RESULTS (d) | GEOTECH SAMPLE OR CORE BOX NO. (e) | ANALYTICAL SAMPLE NO. (f) | BLOW COUNT (g) | REMARKS (h) |
|---|---|---|---|---|---|---|---|
| | | Concrete | | | | | |
| | 1 | Poorly Graded Gravel w/Sand | | | | | Run #1 - 0825 Recovery - 1.1' |
| | 2 | Sandy Lean Clay (CL) - gray to brown, moist, medium plasticity fines, Coarse fraction predom. fine sand | 4 ppm | | | | |
| | 3 | Same as above, petroleum odor. | 14 ppm | | LAFBHF-25-5.0 | | Run #2 - 0837 Recovery - 2.0' |
| | 4 | | | | | | |
| | 5 | | | | | | Run #3 - 0901 Recovery - 2.0' |
| | 6 | Silty Sand (SM) - gray to brown, moist, predom. fine sand, fossiliferous trash, low plasticity fines. | 3 ppm | | | | |
| | 7 | | | | | | Run #4 - 0920 Recovery - 2.0' |
| | 8 | | 4 ppm | | | | |
| | 9 | | 3 ppm | | | | Run #5 - 0946 Recovery - 1.0' |
| | 10 | Bottom of boring 10.0 ft. | | | | | |

PROJECT: Hydrant Fuel System Contamination Investigation

HOLE NO. LAFBHF-25

ENG FORM 5056A-R, AUG 94

(Proponent: CECW-EG)

# HTRW DRILLING LOG

| | | |
|---|---|---|
| DISTRICT: Omaha | | HOLE NUMBER: LAFBHF-25 |
| 1. COMPANY NAME: USACE | 2. DRILL SUBCONTRACTOR: N/A | SHEET 1 OF 2 SHEETS |
| 3. PROJECT: Hydrant Fuel System Contamination Investigation | 4. LOCATION: Langley AFB, VA | |
| 5. NAME OF DRILLER: Joe Morrissey | 6. MANUFACTURER'S DESIGNATION OF DRILL: Simco Earthprobe 200 | |
| 7. SIZES AND TYPES OF DRILLING AND SAMPLING EQUIPMENT: Direct-push rig with 2-inch steel split-spoons below concrete to bottom of boring. | 8. HOLE LOCATION | |
| | 9. SURFACE ELEVATION | |
| | 10. DATE STARTED: 4/24/04 | 11. DATE COMPLETED: 4/24/04 |
| 12. OVERBURDEN THICKNESS: N/A | 15. DEPTH GROUNDWATER ENCOUNTERED | |
| 13. DEPTH DRILLED INTO ROCK: N/A | 16. DEPTH TO WATER AND ELAPSED TIME AFTER DRILLING COMPLETED: 2.7ft immediately after drilling complete | |
| 14. TOTAL DEPTH OF HOLE: 10.0ft | 17. OTHER WATER LEVEL MEASUREMENTS (SPECIFY) | |

| | | | | | | |
|---|---|---|---|---|---|---|
| 18. GEOTECHNICAL SAMPLES | DISTURBED | UNDISTURBED | 19. TOTAL NUMBER OF CORE BOXES | | | |
| 20. SAMPLES FOR CHEMICAL ANALYSIS | VOC: VOHT-04-1GB-1 | METALS | OTHER (SPECIFY): 0172 (DR) | OTHER (SPECIFY) | OTHER (SPECIFY) | 21. TOTAL CORE RECOVERY % |
| 22. DISPOSITION OF HOLE | BACKFILLED: X | MONITORING WELL | OTHER (SPECIFY) | 23. SIGNATURE OF INSPECTOR: [signature] | | |

LOCATION SKETCH/COMMENTS

SCALE

PROJECT: Hydrant Fuel System Contamination Investigation HOLE NO. LAFBHF-25

ENG FORM 5056-R, AUG 94 (Proponent: CECW-EG)

# HTRW DRILLING LOG (CONTINUATION SHEET)

HOLE NUMBER: LAFBHF-24

PROJECT: Hydrant Fuel System Contamination Investigation

INSPECTOR: R. Grabowski

SHEET 2 OF 2 SHEETS

| ELEV. (a) | DEPTH (b) | DESCRIPTION OF MATERIALS (c) | FIELD SCREENING RESULTS (d) | GEOTECH SAMPLE OR CORE BOX NO. (e) | ANALYTICAL SAMPLE NO. (f) | BLOW COUNT (g) | REMARKS (h) |
|---|---|---|---|---|---|---|---|
| | 1 | Concrete | | | | | |
| | 2 | Poorly Graded Sand w/ Gravel<br>Sandy Lean Clay (CL) - gray, moist, medium plasticity fines, coarse fraction fine sand. | 5 ppm | | | | Run #1 - 1515<br>Recovery - 1.5' |
| | 3 | Silty Sand (SM) - gray to brown, moist, fine sand with occas. gravel, fossiliferous hash, low plasticity fines. | 5 ppm | | LAFBHF 24-4.5 | | Run #2 - 1520<br>Recovery - 1.5' |
| | 4 | | | | | | |
| | 5 | | 5 ppm | | | | Run #3 - 1531<br>Recovery - 1.5' |
| | 6 | | | | | | Run #4 - 1548<br>Recovery - 1.5' |
| | 7 | | 6 ppm | D-2 | | | |
| | 8 | Poorly Graded Sand with Silt (SP) - brown, moist, fine sand, foss. hash, low to no plast. fines. | 6 ppm | | | | Run #5 - 1554<br>Recovery - 1.5' |
| | 9 | Bottom of boring 9.0 ft. | | | | | |

PROJECT: Hydrant Fuel System Contamination Investigation

HOLE NO. LAFBHF-24

ENG FORM 5056A-R, AUG 94 (Proponent: CECW-EG)

# HTRW DRILLING LOG

| | | |
|---|---|---|
| DISTRICT: Omaha | | HOLE NUMBER: LAFBHF-24 |
| 1. COMPANY NAME: USACE | 2. DRILL SUBCONTRACTOR: N/A | SHEET 1 OF 2 SHEETS |
| 3. PROJECT: Hydrant Fuel System Contamination Investigation | 4. LOCATION: Langley AFB, VA | |
| 5. NAME OF DRILLER: Joe Morrissey | 6. MANUFACTURER'S DESIGNATION OF DRILL: Simco Earthprobe 200 | |
| 7. SIZES AND TYPES OF DRILLING AND SAMPLING EQUIPMENT: Direct-push rig with 2-inch steel split-spoons below concrete to bottom of borings | 8. HOLE LOCATION | |
| | 9. SURFACE ELEVATION | |
| | 10. DATE STARTED: 4/24/04 | 11. DATE COMPLETED: 4/24/04 |
| 12. OVERBURDEN THICKNESS: N/A | 15. DEPTH GROUNDWATER ENCOUNTERED | |
| 13. DEPTH DRILLED INTO ROCK: N/A | 16. DEPTH TO WATER AND ELAPSED TIME AFTER DRILLING COMPLETED: Not measured | |
| 14. TOTAL DEPTH OF HOLE: 9.0 ft | 17. OTHER WATER LEVEL MEASUREMENTS (SPECIFY) | |

| 18. GEOTECHNICAL SAMPLES | DISTURBED | UNDISTURBED | 19. TOTAL NUMBER OF CORE BOXES |
|---|---|---|---|
| | X | | |

| 20. SAMPLES FOR CHEMICAL ANALYSIS | VOC | METALS | OTHER (SPECIFY) | OTHER (SPECIFY) | OTHER (SPECIFY) | 21. TOTAL CORE RECOVERY % |
|---|---|---|---|---|---|---|
| | VOH+OHGRO | | OA2(DR) | | | |

| 22. DISPOSITION OF HOLE | BACKFILLED | MONITORING WELL | OTHER (SPECIFY) | 23. SIGNATURE OF INSPECTOR |
|---|---|---|---|---|
| | X | | | Neil J. Grabowski |

LOCATION SKETCH/COMMENTS

SCALE

PROJECT: Hydrant Fuel System Contamination Investigation HOLE NO. LAFBHF-24

ENG FORM 5056-R, AUG 94 (Proponent: CECW-EG)

# HTRW DRILLING LOG (CONTINUATION SHEET)

HOLE NUMBER: LAFBHF-23

PROJECT: Hydrant Fuel System Contamination Investigation

INSPECTOR: R. Grabowski

SHEET 2 OF 2 SHEETS

| ELEV. (a) | DEPTH (b) | DESCRIPTION OF MATERIALS (c) | FIELD SCREENING RESULTS (d) | GEOTECH SAMPLE OR CORE BOX NO. (e) | ANALYTICAL SAMPLE NO. (f) | BLOW COUNT (g) | REMARKS (h) |
|---|---|---|---|---|---|---|---|
| | 1 | Concrete | | | | | |
| | 2 | Poorly Graded Sand w/ Gravel<br>Sandy Lean Clay (CL) - brown, moist, med. plasticity fines, coarse fraction predom. fine Sand with occas. gravel | 1 ppm | | | | Run #1 - 1106<br>Recovery - 1.2' |
| | 3 | Clayey Sand (SC) - brown, moist, predom. fine sand with occas. gravel, medium plasticity fines. | Insufficient Sample Volume | | LAFBHF-23-4.5 | | Run #2 - 1111<br>Recovery - 0.8' |
| | 4 | Silty Sand (SM) - brown, moist, fine Sand, fossiliferous hash, low plasticity fines. | | | | | |
| | 5 | | 3 ppm | | | | Run #3 - 1120<br>Recovery - 1.5' |
| | 6 | Same as above, grey at 7.0'. | 3 ppm | | | | Run #4 - 1132<br>Recovery - 1.5' |
| | 7 | | | | | | |
| | 8 | | 3 ppm | | | | Run #5 - 1140<br>Recovery - 1.5' |
| | 9 | Bottom of boring 9.0 ft. | | | | | |

PROJECT: Hydrant Fuel System Contamination Investigation

HOLE NO. LAFBHF-23

ENG FORM 5056A-R, AUG 94 (Proponent: CECW-EG)

# HTRW DRILLING LOG

| | | |
|---|---|---|
| DISTRICT: Omaha | | HOLE NUMBER: LAFBHF-23 |
| 1. COMPANY NAME: USACE | 2. DRILL SUBCONTRACTOR: N/A | SHEET 1 OF 2 SHEETS |
| 3. PROJECT: Hydrant Fuel System Contamination Investigation | 4. LOCATION: Langley AFB, VA | |
| 5. NAME OF DRILLER: Joe Morrissey | 6. MANUFACTURER'S DESIGNATION OF DRILL: Simco Earthprobe 200 | |
| 7. SIZES AND TYPES OF DRILLING AND SAMPLING EQUIPMENT: Direct-push rig with 2-inch steel split-spoons below concrete to bottom of boring | 8. HOLE LOCATION | |
| | 9. SURFACE ELEVATION | |
| | 10. DATE STARTED: 4/25/04 | 11. DATE COMPLETED: 4/25/04 |
| 12. OVERBURDEN THICKNESS: N/A | 15. DEPTH GROUNDWATER ENCOUNTERED | |
| 13. DEPTH DRILLED INTO ROCK: N/A | 16. DEPTH TO WATER AND ELAPSED TIME AFTER DRILLING COMPLETED: 3.0 ft immediately after drilling complete | |
| 14. TOTAL DEPTH OF HOLE: 9.0 ft | 17. OTHER WATER LEVEL MEASUREMENTS (SPECIFY) | |

| 18. GEOTECHNICAL SAMPLES | DISTURBED | UNDISTURBED | 19. TOTAL NUMBER OF CORE BOXES | | | |
|---|---|---|---|---|---|---|
| 20. SAMPLES FOR CHEMICAL ANALYSIS | VOC (Volatile Organics) | METALS | OTHER (SPECIFY) (OVZ (OPR)) | OTHER (SPECIFY) | OTHER (SPECIFY) | 21. TOTAL CORE RECOVERY % |
| 22. DISPOSITION OF HOLE | BACKFILLED X | MONITORING WELL | OTHER (SPECIFY) | 23. SIGNATURE OF INSPECTOR: [signature] | | |

LOCATION SKETCH/COMMENTS

SCALE

PROJECT: Hydrant Fuel System Contamination Investigation HOLE NO. LAFBHF-23

ENG FORM 5056-R, AUG 94 (Proponent: CECW-EG)

# HTRW DRILLING LOG (CONTINUATION SHEET)

HOLE NUMBER: LAFBHF-22

PROJECT: Hydrant Fuel System Contamination Investigation

INSPECTOR: R. Grabowski

SHEET 2 OF 2

| ELEV. (a) | DEPTH (b) | DESCRIPTION OF MATERIALS (c) | FIELD SCREENING RESULTS (d) | GEOTECH SAMPLE OR CORE BOX NO. (e) | ANALYTICAL SAMPLE NO. (f) | BLOW COUNT (g) | REMARKS (h) |
|---|---|---|---|---|---|---|---|
| | 1 | Concrete | | | | | |
| | 2 | Poorly Graded Sand w/Gravel | | | | | Run #1 - 1246 Recovery - 1.5' |
| | 3 | Sandy Lean Clay (CL) - gray, moist, mod. plast. fines, coarse fraction fine sand with occas. gravel. | 2 ppm | | | | |
| | 4 | | 4 ppm | | LAFBHF-22-4.5 | | Run #2 - 1252 Recovery - 1.2' |
| | 5 | Silty Sand (SM) - gray to brown, moist, predom. fine sand, low plasticity fines. | 5 ppm | | | | Run #3 - 1303 Recovery - 1.3' |
| | 6 | | | | | | Run #4 - 1315 Recovery - 1.5' |
| | 7 | | 3 ppm | | | | |
| | 8 | | 2 ppm | | | | Run #5 - 1326 Recovery - 0.8' |
| | 9 | Bottom of boring | 9.0 ft. | | | | |

PROJECT: Hydrant Fuel System Contamination Investigation

HOLE NO. LAFBHF-22

ENG FORM 5056A-R, AUG 94

(Proponent: CECW-EG)

# HTRW DRILLING LOG

| | | |
|---|---|---|
| DISTRICT: Omaha | | HOLE NUMBER: LAFBHF-22 |
| 1. COMPANY NAME: USACE | 2. DRILL SUBCONTRACTOR: N/A | SHEET 1 OF 2 SHEETS |
| 3. PROJECT: Hydrant Fuel System Contamination Investigation | 4. LOCATION: Langley AFB, VA | |
| 5. NAME OF DRILLER: Joe Morrissey | 6. MANUFACTURER'S DESIGNATION OF DRILL: Simco Earthprobe 200 | |
| 7. SIZES AND TYPES OF DRILLING AND SAMPLING EQUIPMENT: Direct-push rig with 2-inch steel split-spoons below concrete to bottom of boring. | 8. HOLE LOCATION | |
| | 9. SURFACE ELEVATION | |
| | 10. DATE STARTED: 4/25/04 | 11. DATE COMPLETED: 4/25/04 |
| 12. OVERBURDEN THICKNESS: N/A | 15. DEPTH GROUNDWATER ENCOUNTERED | |
| 13. DEPTH DRILLED INTO ROCK: N/A | 16. DEPTH TO WATER AND ELAPSED TIME AFTER DRILLING COMPLETED: 4.7 ft. immediately after drilling complete | |
| 14. TOTAL DEPTH OF HOLE: 9.0 ft | 17. OTHER WATER LEVEL MEASUREMENTS (SPECIFY) | |

| 18. GEOTECHNICAL SAMPLES | DISTURBED | UNDISTURBED | 19. TOTAL NUMBER OF CORE BOXES |
|---|---|---|---|
| | | | |

| 20. SAMPLES FOR CHEMICAL ANALYSIS | VOC | METALS | OTHER (SPECIFY) | OTHER (SPECIFY) | OTHER (SPECIFY) | 21. TOTAL CORE RECOVERY % |
|---|---|---|---|---|---|---|
| | VOA (OA1) | | OA2 (DRO) | | | |

| 22. DISPOSITION OF HOLE | BACKFILLED | MONITORING WELL | OTHER (SPECIFY) | 23. SIGNATURE OF INSPECTOR |
|---|---|---|---|---|
| | X | | | [signature] |

LOCATION SKETCH/COMMENTS

SCALE

PROJECT: Hydrant Fuel System Contamination Investigation HOLE NO. LAFBHF-22

ENG FORM 5056-R, AUG 94 (Proponent: CECW-EG)

# HTRW DRILLING LOG (CONTINUATION SHEET)

HOLE NUMBER: LAFBHF-21

PROJECT: Hydrant Fuel System Contamination Investigation

INSPECTOR: R. Grabowski

SHEET 2 OF 2 SHEETS

| ELEV. (a) | DEPTH (b) | DESCRIPTION OF MATERIALS (c) | FIELD SCREENING RESULTS (d) | GEOTECH SAMPLE OR CORE BOX NO. (e) | ANALYTICAL SAMPLE NO. (f) | BLOW COUNT (g) | REMARKS (h) |
|---|---|---|---|---|---|---|---|
| | | Concrete | | | | | |
| | 1 | | | | | | |
| | 2 | Sandy Lean Clay (CL) - gray, moist, med. plasticity fines, coarse fraction predom. fine sand with occasional gravel, fossiliferous hash at 2.0' | 1 ppm | | | | Run #1 - 1416 Recovery - 1.5' |
| | 3 | | | | LAFBHF-21-4.5 | | Run #2 - 1422 Recovery - 1.4' |
| | 4 | | 5 ppm | | | | |
| | 5 | | 300 ppm | | | | Run #3 - 1430 Recovery - 1.5' |
| | 6 | Silty Sand (SM) - brown, moist, predom. fine sand with occas. gravel, fossiliferous hash, low plasticity fines, petroleum odor | | | | | Run #4 - 1445 Recovery - 1.8' |
| | 7 | | 7 ppm | | | | |
| | 8 | | | | | | Run #5 - 1515 Recovery - 1.3' |
| | 9 | | 6 ppm | | | | |
| | 10 | Bottom of boring | 9.5 ft. | | | | |

PROJECT: Hydrant Fuel System Contamination Investigation

HOLE NO. LAFBHF-21

ENG FORM 5056A-R, AUG 94 (Proponent: CECW-EG)

# HTRW DRILLING LOG

| | | |
|---|---|---|
| DISTRICT: Omaha | | HOLE NUMBER: LAFBHF-21 |
| 1. COMPANY NAME: USACE | 2. DRILL SUBCONTRACTOR: N/A | SHEET 1 OF 2 SHEETS |
| 3. PROJECT: Hydrant Fuel System Contamination Investigation | 4. LOCATION: Langley AFB, VA | |
| 5. NAME OF DRILLER: Joe Morrissey | 6. MANUFACTURER'S DESIGNATION OF DRILL: Simco Earthprobe 200 | |
| 7. SIZES AND TYPES OF DRILLING AND SAMPLING EQUIPMENT: Direct-push rig with 2-inch Steel split-Spoons below concrete to bottom of boring. | 8. HOLE LOCATION | |
| | 9. SURFACE ELEVATION | |
| | 10. DATE STARTED: 4/25/04 | 11. DATE COMPLETED: 4/25/04 |
| 12. OVERBURDEN THICKNESS: N/A | 15. DEPTH GROUNDWATER ENCOUNTERED | |
| 13. DEPTH DRILLED INTO ROCK: N/A | 16. DEPTH TO WATER AND ELAPSED TIME AFTER DRILLING COMPLETED: Not measured. | |
| 14. TOTAL DEPTH OF HOLE: 9.5 ft. | 17. OTHER WATER LEVEL MEASUREMENTS (SPECIFY) | |

| 18. GEOTECHNICAL SAMPLES | DISTURBED | UNDISTURBED | 19. TOTAL NUMBER OF CORE BOXES |
|---|---|---|---|
| | | | |

| 20. SAMPLES FOR CHEMICAL ANALYSIS | VOC | METALS | OTHER (SPECIFY) | OTHER (SPECIFY) | OTHER (SPECIFY) | 21. TOTAL CORE RECOVERY % |
|---|---|---|---|---|---|---|
| | VOA (GRAB) | | OA2 (DR) | | | |

| 22. DISPOSITION OF HOLE | BACKFILLED | MONITORING WELL | OTHER (SPECIFY) | 23. SIGNATURE OF INSPECTOR |
|---|---|---|---|---|
| | X | Temporary | | [signature] |

LOCATION SKETCH/COMMENTS

SCALE

PROJECT: Hydrant Fuel System Contamination Investigation HOLE NO. LAFBHF-21

ENG FORM 5056-R, AUG 94 (Proponent: CECW-EG)

# HTRW DRILLING LOG (CONTINUATION SHEET)

HOLE NUMBER: LAFBHF-20

PROJECT: Hydrant Fuel System Contamination Investigation

INSPECTOR: R. Grabowski

SHEET 2 OF 2 SHEETS

| ELEV. (a) | DEPTH (b) | DESCRIPTION OF MATERIALS (c) | FIELD SCREENING RESULTS (d) | GEOTECH SAMPLE OR CORE BOX NO. (e) | ANALYTICAL SAMPLE NO. (f) | BLOW COUNT (g) | REMARKS (h) |
|---|---|---|---|---|---|---|---|
| | 1 | Concrete | | | | | |
| | 2 | Poorly Graded Sand w/ Gravel<br>Sandy Lean Clay (CL) - gray, moist, mod. plasticity fines, coarse fraction predom. fine sand with occasional gravel. | 11 ppm | | | | Run #1 - 1631<br>Recovery - 1.0' |
| | 3 | | | | LAFBHF-20-4.5 | | Run #2 - 1640<br>Recovery - 1.2' |
| | 4 | | 20 ppm | | | | |
| | 5 | Bottom of boring 4.5 ft.<br>Drilling activities were halted due to airplane traffic. | | | | | |

PROJECT: Hydrant Fuel System Contamination Investigation HOLE NO. LAFBHF-20

ENG FORM 5056A-R, AUG 94 (Proponent: CECW-EG)

# HTRW DRILLING LOG

| | | |
|---|---|---|
| DISTRICT: Omaha | | HOLE NUMBER: LAFBHF-20 |
| 1. COMPANY NAME: USACE | 2. DRILL SUBCONTRACTOR: N/A | SHEET 1 OF 2 SHEETS |
| 3. PROJECT: Hydrant Fuel System Contamination Investigation | 4. LOCATION: Langley AFB, VA | |
| 5. NAME OF DRILLER: Joe Morrissey | 6. MANUFACTURER'S DESIGNATION OF DRILL: Simco Earthprobe 200 | |
| 7. SIZES AND TYPES OF DRILLING AND SAMPLING EQUIPMENT: Direct-push rig with 2-inch steel split-spoons below concrete to bottom of boring | 8. HOLE LOCATION | |
| | 9. SURFACE ELEVATION | |
| | 10. DATE STARTED: 4/25/04 | 11. DATE COMPLETED: 4/25/04 |
| 12. OVERBURDEN THICKNESS: N/A | 15. DEPTH GROUNDWATER ENCOUNTERED | |
| 13. DEPTH DRILLED INTO ROCK: N/A | 16. DEPTH TO WATER AND ELAPSED TIME AFTER DRILLING COMPLETED: Not measured | |
| 14. TOTAL DEPTH OF HOLE: 4.5 ft. | 17. OTHER WATER LEVEL MEASUREMENTS (SPECIFY) | |

| 18. GEOTECHNICAL SAMPLES | DISTURBED | UNDISTURBED | 19. TOTAL NUMBER OF CORE BOXES |
|---|---|---|---|
| | | | |

| 20. SAMPLES FOR CHEMICAL ANALYSIS | VOC | METALS | OTHER (SPECIFY) | OTHER (SPECIFY) | OTHER (SPECIFY) | 21. TOTAL CORE RECOVERY % |
|---|---|---|---|---|---|---|
| | VOA+OA (GRO) | | OAZ (DRO) | | | |

| 22. DISPOSITION OF HOLE | BACKFILLED | MONITORING WELL | OTHER (SPECIFY) | 23. SIGNATURE OF INSPECTOR |
|---|---|---|---|---|
| | X | | | [signature] |

LOCATION SKETCH/COMMENTS | SCALE

PROJECT: Hydrant Fuel System Contamination Investigation | HOLE NO.: LAFBHF-20

ENG FORM 5056-R, AUG 94 (Proponent: CECW-EG)

U.S. ARMY CORPS OF ENGINEERS

# CHAIN OF CUSTODY RECORD

PROJ. NO.: LIMS 7043

PROJECT NAME: Langley AFB Hydrant Fuel System Contamination Investigation

SAMPLERS: (Signature) R. Grabowski

| STA. NO. | DATE | TIME | COMP. | GRAB | STATION LOCATION | NO. OF CONTAINERS | VOA+OA1 (GRO) | OA2 (DRO) | | | | | | REMARKS |
|---|---|---|---|---|---|---|---|---|---|---|---|---|---|---|
| | 5/4/04 | 0833 | | X | LAFBHF-09-4.0 | 1 | X | | | | | | | |
| | 5/4/04 | 0833 | | X | LAFBHF-09-4.0 | 1 | | X | | | | | | |
| | 5/4/04 | 1104 | | X | LAFBHF-08-4.0 | 1 | X | | | | | | | |
| | 5/4/04 | 1104 | | X | LAFBHF-08-4.0 | 1 | | X | | | | | | |
| | 5/4/04 | 1259 | | X | LAFBHF-07-4.0 | 1 | X | | | | | | | |
| | 5/4/04 | 1259 | | X | LAFBHF-07-4.0 | 1 | | X | | | | | | |
| | 5/4/04 | 1427 | | X | LAFBHF-06-4.0 | 1 | X | | | | | | | |
| | 5/4/04 | 1427 | | X | LAFBHF-06-4.0 | 1 | | X | | | | | | |
| | 5/4/04 | 1520 | | X | LAFBHF-05-4.0 | 1 | X | | | | | | | |
| | 5/4/04 | 1520 | | X | LAFBHF-05-4.0 | 1 | | X | | | | | | |

| Relinquished by: (Signature) | Date / Time | Received by: (Signature) | Relinquished by: (Signature) | Date / Time | Received by: (Signature) |
|---|---|---|---|---|---|
| R. Grabowski | 5/4/04 1730 | | | | |
| Relinquished by: (Signature) | Date / Time | Received by: (Signature) | Relinquished by: (Signature) | Date / Time | Received by: (Signature) |
| | | | | | |
| Relinquished by: (Signature) | Date / Time | Received for Laboratory by: (Signature) | Date / Time | Remarks | |
| | | | | | |

Distribution: Original Accompanies Shipment; Copy to Coordinator Field Files

14921

U.S. ARMY CORPS OF ENGINEERS

# CHAIN OF CUSTODY RECORD

PROJ. NO.: LIMS 7843

PROJECT NAME: Langley AFB Hydrant Fuel System Contamination Investigation

SAMPLERS: (Signature) R. Grabowski

| STA. NO. | DATE | TIME | COMP. | GRAB | STATION LOCATION | NO. OF CONTAINERS | VOA + OA1 (GW) | OA2 (DW20) | | | | | REMARKS |
|---|---|---|---|---|---|---|---|---|---|---|---|---|---|
| | 5/5/04 | 1440 | | X | LAFBHF-MW05 | 2 | | X | | | | | |
| | 5/5/04 | 0831 | | X | LAFBHF-04-4.0 | 1 | X | | | | | | |
| | 5/5/04 | 0831 | | X | LAFBHF-04-4.0 | 1 | | X | | | | | |
| | 5/5/04 | 1440 | | X | LAFBHF-MW05 | 3 | X | | | | | | |
| | 4/30/04 | 1515 | | X | TB040430-A | 2 | | | | | | | Trip Blank |

| Relinquished by: (Signature) | Date / Time | Received by: (Signature) | Relinquished by: (Signature) | Date / Time | Received by: (Signature) |
|---|---|---|---|---|---|
| R. Grabowski | 5/5/04 1700 | | | | |
| Relinquished by: (Signature) | Date / Time | Received by: (Signature) | Relinquished by: (Signature) | Date / Time | Received by: (Signature) |
| | | | | | |
| Relinquished by: (Signature) | Date / Time | Received for Laboratory by: (Signature) | Date / Time | Remarks | |
| | | | | | |

Distribution: Original Accompanies Shipment; Copy to Coordinator Field Files

14930

U.S. ARMY CORPS OF ENGINEERS

# CHAIN OF CUSTODY RECORD

| PROJ. NO. | PROJECT NAME |
|---|---|
| LIM57043 | Langley AFB Hydrant Fuel System Contamination Investigation |

SAMPLERS: (Signature) R. Grabowski

| STA. NO. | DATE | TIME | COMP. | GRAB | STATION LOCATION | NO. OF CONTAINERS | VOA+OA-1 (GRO) | OA-2 (DRO) | | | | | | REMARKS |
|---|---|---|---|---|---|---|---|---|---|---|---|---|---|---|
| | 4/30/04 | 0906 | | X | LAFBHF-15-4.0 | 1 | X | | | | | | | |
| | 4/30/04 | 0906 | | X | LAFBHF-15-4.0 | 1 | | X | | | | | | |
| | 4/30/04 | 1059 | | X | LAFBHF-13-4.0 | 1 | X | | | | | | | |
| | 4/30/04 | 1059 | | X | LAFBHF-13-4.0 | 1 | | X | | | | | | |
| | 4/30/04 | 1153 | | X | LAFBHF-12-4.0 | 1 | X | | | | | | | |
| | 4/30/04 | 1153 | | X | LAFBHF-12-4.0 | 1 | | X | | | | | | |
| | 4/30/04 | 1323 | | X | LAFBHF-11-4.0 | 1 | X | | | | | | | |
| | 4/30/04 | 1323 | | X | LAFBHF-11-4.0 | 1 | | X | | | | | | |
| | 4/30/04 | 1411 | | X | LAFBHF-10-4.0 | 1 | X | | | | | | | |
| | 4/30/04 | 1411 | | X | LAFBHF-10-4.0 | 1 | | X | | | | | | |
| | 4/30/04 | 1512 | | X | LAFBHF-MW10 | 3 | X | | | | | | | |
| | 4/30/04 | 1512 | | X | LAFBHF-MW10 | 2 | | X | | | | | | |
| | | | | | | | | | | | | | | |
| | | | | | | | | | | | | | | |
| | | | | | | | | | | | | | | |

| Relinquished by: (Signature) | Date / Time | Received by: (Signature) | Relinquished by: (Signature) | Date / Time | Received by: (Signature) |
|---|---|---|---|---|---|
| R. Grabowski | 4/30/04 1700 | | | | |
| Relinquished by: (Signature) | Date / Time | Received by: (Signature) | Relinquished by: (Signature) | Date / Time | Received by: (Signature) |
| | | | | | |
| Relinquished by: (Signature) | Date / Time | Received for Laboratory by: (Signature) | Date / Time | Remarks | |
| | | | | | |

Distribution: Original Accompanies Shipment; Copy to Coordinator Field Files

14927

U.S. ARMY CORPS OF ENGINEERS

# CHAIN OF CUSTODY RECORD

PROJ. NO.: LIMS 7043

PROJECT NAME: Langley AFB Hydrant Fuel System Contamination Investigation

SAMPLERS: (Signature) R. Grabowski

| STA. NO. | DATE | TIME | COMP. | GRAB | STATION LOCATION | NO. OF CONTAINERS | VOC+OA1 (GRO) | OA2 (DRO) | | | | | REMARKS |
|---|---|---|---|---|---|---|---|---|---|---|---|---|---|
| | 4/29/04 | 1022 | | X | LAFBHF-MW30 | 2 | | X | | | | | |
| | 4/29/04 | 1022 | | X | LAFBHF-MW30 | 3 | X | | | | | | |
| | 4/21/04 | 1335 | | X | TB0404 21-D | 2 | | | | | | | Trip Blank |
| | 4/29/04 | 0905 | | X | LAFBHF-30-4.0 | 1 | X | | | | | | |
| | 4/29/04 | 0905 | | X | LAFBHF-30-4.0 | 1 | | X | | | | | |
| | 4/29/04 | 1204 | | X | LAFBHF-19-4.0 | 1 | X | | | | | | |
| | 4/29/04 | 1204 | | X | LAFBHF-19-4.0 | 1 | | X | | | | | |

| Relinquished by: (Signature) | Date / Time | Received by: (Signature) | Relinquished by: (Signature) | Date / Time | Received by: (Signature) |
|---|---|---|---|---|---|
| R Grabowski | 4/29/04 1830 | | | | |
| Relinquished by: (Signature) | Date / Time | Received by: (Signature) | Relinquished by: (Signature) | Date / Time | Received by: (Signature) |
| | | | | | |
| Relinquished by: (Signature) | Date / Time | Received for Laboratory by: (Signature) | Date / Time | Remarks | |
| | | | | | |

Distribution: Original Accompanies Shipment; Copy to Coordinator Field Files

14918

U.S. ARMY CORPS OF ENGINEERS

# CHAIN OF CUSTODY RECORD

PROJ. NO.: LIMS 7043

PROJECT NAME: Langley AFB Hydrant Fuel System Contamination Investigation

SAMPLERS: (Signature) R. Grabowski

| STA. NO. | DATE | TIME | COMP. | GRAB | STATION LOCATION | NO. OF CONTAINERS | VOC+OA1(GRO) | OA2(DRO) | | | | | REMARKS |
|---|---|---|---|---|---|---|---|---|---|---|---|---|---|
| | 4/29/04 | 1337 | | X | LAFBHF-18-4.0 | 1 | X | | | | | | |
| | 4/29/04 | 1339 | | X | LAFBHF-18-4.0 | 1 | | X | | | | | |
| | 4/29/04 | 1444 | | X | LAFBHF-17-4.0 | 1 | X | | | | | | |
| | 4/29/04 | 1444 | | X | LAFBHF-17-4.0 | 1 | | X | | | | | |
| | 4/29/04 | 1553 | | X | LAFBHF-16-4.0 | 1 | X | | | | | | |
| | 4/29/04 | 1553 | | X | LAFBHF-16-4.0 | 1 | | X | | | | | |
| | 4/29/04 | 1641 | | X | LAFBHF-14-4.0 | 1 | X | | | | | | |
| | 4/29/04 | 1641 | | X | LAFBHF-14-4.0 | 1 | | X | | | | | |

| Relinquished by: (Signature) | Date / Time | Received by: (Signature) | Relinquished by: (Signature) | Date / Time | Received by: (Signature) |
|---|---|---|---|---|---|
| R. Grabowski | 4/29/04 1830 | | | | |
| Relinquished by: (Signature) | Date / Time | Received by: (Signature) | Relinquished by: (Signature) | Date / Time | Received by: (Signature) |
| | | | | | |

| ished by: (Signature) | Date / Time | Received for Laboratory by: (Signature) | Date / Time | Remarks |
|---|---|---|---|---|
| | | | | |

Distribution: Original Accompanies Shipment; Copy to Coordinator Field Files

14919

U.S. ARMY CORPS OF ENGINEERS

# CHAIN OF CUSTODY RECORD

PROJ. NO.: LIMS 7043

PROJECT NAME: Langley AFB Hydrant Fuel System Contamination Survey

SAMPLERS: (Signature) R. Grabowski

| STA. NO. | DATE | TIME | COMP. | GRAB | STATION LOCATION | NO. OF CONTAINERS | VOC+OA1 (GRO) | OA2 (DRO) | | | | | REMARKS |
|---|---|---|---|---|---|---|---|---|---|---|---|---|---|
| | 4/28/04 | 1435 | | X | LAFBHF - MW03 | 2 | | X | | | | | |
| | 4/28/04 | 1645 | | X | LAFBHF - MW29 | 2 | | X | | | | | |
| | 4/28/04 | 0847 | | X | LAFBHF - 03 - 4.0 | 1 | X | | | | | | |
| | 4/28/04 | 0847 | | X | LAFBHF - 03 - 4.0 | 1 | | X | | | | | |
| | 4/28/04 | 1141 | | X | LAFBHF - 02 - 4.0 | 1 | X | | | | | | |
| | 4/28/04 | 1141 | | X | LAFBHF - 02 - 4.0 | 1 | | X | | | | | |
| | 4/28/04 | 1435 | | X | LAFBHF - MW03 | 3 | X | | | | | | |
| | 4/28/04 | 1645 | | X | LAFBHF - MW29 | 3 | X | | | | | | |
| | 4/21/04 | 1330 | | X | TB 040421-B | 2 | | | | | | | Trip Blanks |

| Relinquished by: (Signature) | Date / Time | Received by: (Signature) | Relinquished by: (Signature) | Date / Time | Received by: (Signature) |
|---|---|---|---|---|---|
| R. Grabowski | 4/28/04 1800 | | | | |
| Relinquished by: (Signature) | Date / Time | Received by: (Signature) | Relinquished by: (Signature) | Date / Time | Received by: (Signature) |
| | | | | | |
| Relinquished by: (Signature) | Date / Time | Received for Laboratory by: (Signature) | Date / Time | Remarks | |
| | | | | | |

Distribution: Original Accompanies Shipment; Copy to Coordinator Field Files

14917

U.S. ARMY CORPS OF ENGINEERS

# CHAIN OF CUSTODY RECORD

PROJ. NO.: LIMS 7043

PROJECT NAME: Langley AFB Hydrant Fuel System Contamination Investigation

SAMPLERS: (Signature) R. Grabowski

| STA. NO. | DATE | TIME | COMP. | GRAB | STATION LOCATION | NO. OF CONTAINERS | VOA+OA1 (GRO) | OA2 (DRO) | | | | | REMARKS |
|---|---|---|---|---|---|---|---|---|---|---|---|---|---|
| | 4/27/04 | 1531 | | X | LAFBHF-MW01 | 2 | | X | | | | | |
| | 4/27/04 | 1531 | | X | LAFBHF-MW01 | 3 | X | | | | | | |
| | 4/27/04 | 1309 | | X | LAFBHF-01-4.0 | 1 | X | | | | | | |
| | 4/27/04 | 1309 | | X | LAFBHF-01-4.0 | 1 | | X | | | | | |
| | 4/27/04 | 1330 | | X | TB040421-C | 2 | | | | | | | Trip Blank |

| Relinquished by: (Signature) | Date / Time | Received by: (Signature) | Relinquished by: (Signature) | Date / Time | Received by: (Signature) |
|---|---|---|---|---|---|
| R. Grabowski | 4/27/04 1800 | | | | |
| Relinquished by: (Signature) | Date / Time | Received by: (Signature) | Relinquished by: (Signature) | Date / Time | Received by: (Signature) |
| | | | | | |
| Relinquished by: (Signature) | Date / Time | Received for Laboratory by: (Signature) | Date / Time | Remarks | |
| | | | | | |

Distribution: Original Accompanies Shipment; Copy to Coordinator Field Files

14916

U.S. ARMY CORPS OF ENGINEERS

# CHAIN OF CUSTODY RECORD

PROJ. NO.: Lims 7043

PROJECT NAME: Langley AFB Hydrant Fuel System Contamination Survey

SAMPLERS: (Signature) R. Grabowski

| STA. NO. | DATE | TIME | COMP. | GRAB | STATION LOCATION | NO. OF CONTAINERS | VOA+OA1 (GRO) | OA2 (DRO) | | | | | REMARKS |
|---|---|---|---|---|---|---|---|---|---|---|---|---|---|
| | 4/25/04 | 1556 | | X | LAFBHF - MW21 | 2 | | X | | | | | |
| | 4/24/04 | 0837 | | X | LAFBHF - 25 - 5.0 | 1 | X | | | | | | |
| | 4/24/04 | 0837 | | X | LAFBHF - 25 - 5.0 | 1 | | X | | | | | |
| | 4/24/04 | 1243 | | X | LAFBHF - 26 - 5.5 | 1 | X | | | | | | |
| | 4/24/04 | 1243 | | X | LAFBHF - 26 - 5.5 | 1 | | X | | | | | |
| | 4/24/04 | 1520 | | X | LAFBHF - 24 - 4.5 | 1 | X | | | | | | |
| | 4/24/04 | 1520 | | X | LAFBHF - 24 - 4.5 | 1 | | X | | | | | |
| | 4/25/04 | 1252 | | X | LAFBHF - 22 - 4.5 | 1 | X | | | | | | |
| | 4/25/04 | 1252 | | X | LAFBHF - 22 - 4.5 | 1 | | X | | | | | |
| | 4/25/04 | 1422 | | X | LAFBHF - 21 - 4.5 | 1 | X | | | | | | |
| | 4/25/04 | 1422 | | X | LAFBHF - 21 - 4.5 | 1 | | X | | | | | |
| | 4/25/04 | 1111 | | X | LAFBHF - 23 - 4.5 | 1 | X | | | | | | |
| | 4/25/04 | 1111 | | X | LAFBHF - 23 - 4.5 | 1 | | X | | | | | |
| | 4/25/04 | 1640 | | X | LAFBHF - 20 - 4.5 | 1 | X | | | | | | |
| | 4/25/04 | 1640 | | X | LAFBHF - 20 - 4.5 | 1 | | X | | | | | |

| Relinquished by: (Signature) | Date / Time | Received by: (Signature) | Relinquished by: (Signature) | Date / Time | Received by: (Signature) |
|---|---|---|---|---|---|
| R. Grabowski | 4/26/04 1600 | | | | |
| Relinquished by: (Signature) | Date / Time | Received by: (Signature) | Relinquished by: (Signature) | Date / Time | Received by: (Signature) |
| | | | | | |

| Relinquished by: (Signature) | Date / Time | Received for Laboratory by: (Signature) | Date / Time | Remarks |
|---|---|---|---|---|
| | | | | |

Distribution: Original Accompanies Shipment; Copy to Coordinator Field Files

14914

U.S. ARMY CORPS OF ENGINEERS

# CHAIN OF CUSTODY RECORD

PROJ. NO.: Lims 7043

PROJECT NAME: Langley AFB Hydrant Fuel System Contamination Survey

SAMPLERS: (Signature) R. Grabowski

| STA. NO. | DATE | TIME | COMP. | GRAB | STATION LOCATION | NO. OF CONTAINERS | VOA+OA1 (GC) | OA2 (DICO) | | | | | REMARKS |
|---|---|---|---|---|---|---|---|---|---|---|---|---|---|
| | 4/26/04 | 0935 | | X | LAFBHF-27-4.0 | 1 | X | | | | | | |
| | 4/26/04 | 0935 | | X | LAFBHF-27-4.0 | 1 | | X | | | | | |
| | 4/26/04 | 1248 | | X | LAFBHF-28-4.0 | 1 | | X | | | | | |
| | 4/26/04 | 1248 | | X | LAFBHF-28-4.0 | 1 | X | | | | | | |
| | 4/26/04 | 1401 | | X | LAFBHF-29-4.0 | 1 | X | | | | | | |
| | 4/26/04 | 1401 | | X | LAFBHF-29-4.0 | 1 | | X | | | | | |
| | 4/29/04 | 1556 | | X | LAFBHF-MW21 | 3 | X | | | | | | |
| | 4/26/04 | 1330 | | X | TB040421-A | 2 | | | | | | | Trip Blank |

| Relinquished by: (Signature) | Date / Time | Received by: (Signature) | Relinquished by: (Signature) | Date / Time | Received by: (Signature) |
|---|---|---|---|---|---|
| R. Grabowski | 4/26/04 1600 | | | | |
| Relinquished by: (Signature) | Date / Time | Received by: (Signature) | Relinquished by: (Signature) | Date / Time | Received by: (Signature) |
| | | | | | |
| Relinquished by: (Signature) | Date / Time | Received for Laboratory by: (Signature) | Date / Time | Remarks | |
| | | | | | |

Distribution: Original Accompanies Shipment; Copy to Coordinator Field Files

14915

# APPENDIX B

## Chain of Custody Records

# HTRW DRILLING LOG (CONTINUATION SHEET)

HOLE NUMBER LAFBHF-30

SHEET 2 OF 2 SHEETS

PROJECT Hydrant Fuel System Contamination Investigation

INSPECTOR R. Grabowski

| ELEV. (a) | DEPTH (b) | DESCRIPTION OF MATERIALS (c) | FIELD SCREENING RESULTS (d) | GEOTECH SAMPLE OR CORE BOX NO. (e) | ANALYTICAL SAMPLE NO. (f) | BLOW COUNT (g) | REMARKS (h) |
|---|---|---|---|---|---|---|---|
| | 1 | Topsoil<br>Sandy Lean Clay (CL) - gray to brown, moist, medium plasticity fines, coarser fraction predom fine sand with occas. gravel. | 4 ppm | | | | Run #1 - 0856<br>Recovery - 1.6' |
| | 2 | | | | LAFBHF-30-4.0 | | Run #2 - 0905<br>Recovery - 1.6' |
| | 3 | Silty Sand (SM) - gray to brown, wet, predominantly fine sand, occas. gravel, fossiliferous hash, low plasticity fines, petroleum odor. | 30 ppm | | | | |
| | 4 | | | | | | Run #3 - 0929<br>Recovery - 2.0' |
| | 5 | | 210 ppm | | | | |
| | 6 | | | | | | Run #4 - 0944<br>Recovery - 2.0' |
| | 7 | | 50 ppm | | | | |
| | 8 | | | | | | Run #5 - 1051<br>Recovery - 2.0' |
| | | | 8 ppm | | | | |
| | | Bottom of boring | 10.0 ft. | | | | |

PROJECT Hydrant Fuel System Contamination Investigation

HOLE NO. LAFBHF-30

(Proponent: CECW-EG)

ENG FORM 5056A-R, AUG 94

# HTRW DRILLING LOG

| | |
|---|---|
| DISTRICT | Omaha |
| HOLE NUMBER | LAFBHF-30 |
| SHEET / SHEETS | 1 of 2 |
| 1. COMPANY NAME | USACE |
| 2. DRILL SUBCONTRACTOR | N/A |
| 3. PROJECT | Hydrant Fuel System Contamination Investigation |
| 4. LOCATION | Langley AFB, VA |
| 5. NAME OF DRILLER | Joe Morrissey |
| 6. MANUFACTURER'S DESIGNATION OF DRILL | Simco Earthprobe 200 |
| 7. SIZES AND TYPES OF DRILLING AND SAMPLING EQUIPMENT | Direct-push rig with 2-inch steel split-spoons to bottom of boring. |
| 8. HOLE LOCATION | |
| 9. SURFACE ELEVATION | |
| 10. DATE STARTED | 4/29/04 |
| 11. DATE COMPLETED | 4/29/04 |
| 12. OVERBURDEN THICKNESS | N/A |
| 13. DEPTH DRILLED INTO ROCK | N/A |
| 14. TOTAL DEPTH OF HOLE | 10.0 ft |
| 15. DEPTH GROUNDWATER ENCOUNTERED | |
| 16. DEPTH TO WATER AND ELAPSED TIME AFTER DRILLING COMPLETED | Not measured. |
| 17. OTHER WATER LEVEL MEASUREMENTS (SPECIFY) | |
| 18. GEOTECHNICAL SAMPLES | DISTURBED / UNDISTURBED |
| 19. TOTAL NUMBER OF CORE BOXES | |
| 20. SAMPLES FOR CHEMICAL ANALYSIS | VOC: ~~VOA+OP(GRO)~~ / METALS / OTHER (SPECIFY): OA2 (DRO) / OTHER (SPECIFY) / OTHER (SPECIFY) |
| 21. TOTAL CORE RECOVERY % | |
| 22. DISPOSITION OF HOLE | BACKFILLED: X / MONITORING WELL: Temporary / OTHER (SPECIFY) |
| 23. SIGNATURE OF INSPECTOR | Richard Grabowski |

LOCATION SKETCH/COMMENTS

SCALE

PROJECT Hydrant Fuel System Contamination Investigation HOLE NO. LAFBHF-30

ENG FORM 5056-R, AUG 94 (Proponent: CECW-EG)

# HTRW DRILLING LOG (CONTINUATION SHEET)

HOLE NUMBER LAPBHF-29

SHEET 2 OF 2 SHEETS

PROJECT Hydrant Fuel System Contamination Investigation

INSPECTOR R. Grabowski

| ELEV. (a) | DEPTH (b) | DESCRIPTION OF MATERIALS (c) | FIELD SCREENING RESULTS (d) | GEOTECH SAMPLE OR CORE BOX NO. (e) | ANALYTICAL SAMPLE NO. (f) | BLOW COUNT (g) | REMARKS (h) |
|---|---|---|---|---|---|---|---|
| | 1 | Topsoil<br>Sandy Lean Clay (CL) - gray to brown, moist, med. plasticity fines, coarse fraction predom. fine sand w/ occ. gravel | 4 ppm | | | | Run #1 - 1354<br>Recovery - 1.6' |
| | 2 | Silty Sand (SM) - brown, moist, fine sand, fossiliferous hash, low plasticity fines. | | | LAPBHF-29-4.0 | | Run #2 - 1401<br>Recovery - 1.5' |
| | 3 | | 5 ppm | | | | |
| | 4 | | | | | | Run #3 - 1413<br>Recovery - 1.8' |
| | 5 | | 5 ppm | | | | |
| | 6 | Same as above, gray at 6.5 ft. | | | | | Run #4 - 1427<br>Recovery - 2.0' |
| | 7 | | 5 ppm | | | | |
| | 8 | Bottom of boring | 8.0 ft. | | | | |

PROJECT Hydravit Fuel System Contamination Investigation

HOLE NO. LAPBHF-29

ENG FORM 5056A-R, AUG 94 (Proponent: CECW-EG)

# HTRW DRILLING LOG

| | | |
|---|---|---|
| DISTRICT: Omaha | HOLE NUMBER: LAFBHF-29 | SHEET 1 OF 2 |
| 1. COMPANY NAME: USACE | 2. DRILL SUBCONTRACTOR: N/A | |
| 3. PROJECT: Hydrant Fuel System Contamination Investigation | 4. LOCATION: Langley AFB, VA | |
| 5. NAME OF DRILLER: Joe Morrissey | 6. MANUFACTURER'S DESIGNATION OF DRILL: Simco Earthprobe 200 | |
| 7. SIZES AND TYPES OF DRILLING AND SAMPLING EQUIPMENT: Direct-push rig with 2-inch steel split-spoons to bottom of boring. | 8. HOLE LOCATION | |
| | 9. SURFACE ELEVATION | |
| | 10. DATE STARTED: 4/26/04 | 11. DATE COMPLETED: 4/26/04 |
| 12. OVERBURDEN THICKNESS: N/A | 15. DEPTH GROUNDWATER ENCOUNTERED | |
| 13. DEPTH DRILLED INTO ROCK: N/A | 16. DEPTH TO WATER AND ELAPSED TIME AFTER DRILLING COMPLETED: Not measured. | |
| 14. TOTAL DEPTH OF HOLE: 8.0 ft | 17. OTHER WATER LEVEL MEASUREMENTS (SPECIFY) | |

| 18. GEOTECHNICAL SAMPLES | DISTURBED | UNDISTURBED | 19. TOTAL NUMBER OF CORE BOXES |
|---|---|---|---|
| | | | |

| 20. SAMPLES FOR CHEMICAL ANALYSIS | VOC | METALS | OTHER (SPECIFY) | OTHER (SPECIFY) | OTHER (SPECIFY) | 21. TOTAL CORE RECOVERY % |
|---|---|---|---|---|---|---|
| | VOA (HCl) | | OA2 (DI) | | | |

| 22. DISPOSITION OF HOLE | BACKFILLED | MONITORING WELL | OTHER (SPECIFY) | 23. SIGNATURE OF INSPECTOR |
|---|---|---|---|---|
| | X | Temporary | | [illegible] |

LOCATION SKETCH/COMMENTS

SCALE

PROJECT: Hydrant Fuel System Contamination Investigation HOLE NO. LAFBHF-29

ENG FORM 5056-R, AUG 94 (Proponent: CECW-EG)

# HTRW DRILLING LOG (CONTINUATION SHEET)

HOLE NUMBER: LAFBHF-28

SHEET 2 OF 2 SHEETS

PROJECT: Hydrant Fuel System Contamination Investigation

INSPECTOR: R. Grabowski

| ELEV. (a) | DEPTH (b) | DESCRIPTION OF MATERIALS (c) | FIELD SCREENING RESULTS (d) | GEOTECH SAMPLE OR CORE BOX NO. (e) | ANALYTICAL SAMPLE NO. (f) | BLOW COUNT (g) | REMARKS (h) |
|---|---|---|---|---|---|---|---|
| | | Topsoil | | | | | Run #1 - 1243 Recovery - 1.3' |
| | 1 | Sandy Lean Clay (CL) - brown, moist, med. plasticity fines, coarse fraction predom. fine sand with occasional gravel. | 4 ppm | | | | |
| | 2 | | | | LAFBHF-2t-4.0 | | Run #2 - 1248 Recovery - 1.5' |
| | 3 | | 5 ppm | | | | |
| | 4 | | | | | | Run #3 - 1254 Recovery - 1.8' |
| | 5 | | 5 ppm | | | | |
| | | Silty Sand (SM) - brown, moist, predom. fine sand with occas. gravel, fossiliferous hash, low plasticity fines. | | | | | |
| | 6 | | | | | | Run #4 - 1301 Recovery - 1.8' |
| | 7 | | 5 ppm | | | | |
| | 8 | Bottom of boring | 7.0 ft. | | | | |

PROJECT: Hydrant Fuel System Contamination Investigation

HOLE NO. LAFBHF-28

ENG FORM 5056A-R, AUG 94 (Proponent: CECW-EG)

# HTRW DRILLING LOG

| | |
|---|---|
| DISTRICT | Omaha |
| HOLE NUMBER | LAFBHF-28 |
| SHEET / OF SHEETS | 1 / 2 |
| 1. COMPANY NAME | USACE |
| 2. DRILL SUBCONTRACTOR | N/A |
| 3. PROJECT | Hydrant Fuel System Contamination Investigations |
| 4. LOCATION | Langley AFB, VA |
| 5. NAME OF DRILLER | Joe Morrissey |
| 6. MANUFACTURER'S DESIGNATION OF DRILL | Simco Earthprobe 200 |
| 7. SIZES AND TYPES OF DRILLING AND SAMPLING EQUIPMENT | Direct-push rig with 2-inch steel split-spoons to bottom of boring |
| 8. HOLE LOCATION | |
| 9. SURFACE ELEVATION | |
| 10. DATE STARTED | 4/26/04 |
| 11. DATE COMPLETED | 4/26/04 |
| 12. OVERBURDEN THICKNESS | N/A |
| 13. DEPTH DRILLED INTO ROCK | N/A |
| 14. TOTAL DEPTH OF HOLE | 8.0 ft |
| 15. DEPTH GROUNDWATER ENCOUNTERED | |
| 16. DEPTH TO WATER AND ELAPSED TIME AFTER DRILLING COMPLETED | 3.5 ft immediately after drilling complete |
| 17. OTHER WATER LEVEL MEASUREMENTS (SPECIFY) | |
| 18. GEOTECHNICAL SAMPLES | DISTURBED / UNDISTURBED |
| 19. TOTAL NUMBER OF CORE BOXES | |
| 20. SAMPLES FOR CHEMICAL ANALYSIS | VOC: VOA (16oz); METALS; OTHER (SPECIFY): OB2 (1L); OTHER (SPECIFY); OTHER (SPECIFY) |
| 21. TOTAL CORE RECOVERY % | |
| 22. DISPOSITION OF HOLE | BACKFILLED: X; MONITORING WELL; OTHER (SPECIFY) |
| 23. SIGNATURE OF INSPECTOR | [signature] |

LOCATION SKETCH/COMMENTS

SCALE

PROJECT Hydrant Fuel System Contamination Investigation HOLE NO. LAFBHF-28

ENG FORM 5056-R, AUG 94

(Proponent: CECW-EO)

# HTRW DRILLING LOG (CONTINUATION SHEET)

HOLE NUMBER: LAFBHF-27

PROJECT: Hydrant Fuel System Contamination Investigation

INSPECTOR: R. Grabowski

SHEET 2 OF 2 SHEETS

| ELEV. (a) | DEPTH (b) | DESCRIPTION OF MATERIALS (c) | FIELD SCREENING RESULTS (d) | GEOTECH SAMPLE OR CORE BOX NO. (e) | ANALYTICAL SAMPLE NO. (f) | BLOW COUNT (g) | REMARKS (h) |
|---|---|---|---|---|---|---|---|
| | 1 | Topsoil<br>Sandy Lean Clay (CL) - brown, moist, med. plasticity fines, coarse fraction predom. fine sand with occas. gravel. | 1 ppm | | | | Run #1 - 0925<br>Recovery - 1.7' |
| | 2<br>3 | Same as above, gray, petroleum odor. | 60 ppm | | LAFBHF-27-4.0 | | Run #2 - 0935<br>Recovery - 2.0' |
| | 4<br>5 | Silty Sand (SM) - greenish-gray, moist, predominantly fine sand with occas. gravel, fossiliferous hash, low plasticity fines, petroleum odor. | 4 ppm | | | | Run #3 - 0948<br>Recovery - 2.0' |
| | 6<br>7 | Same as above, brown, sandy lean clay lens from 6.8 to 7.0'. | 7 ppm | | | | Run #4 - 0958<br>Recovery - 1.5' |
| | 8 | Same as above, gray to brown. | 4 ppm | | | | Run #5 - 1004<br>Recovery - 1.5' |
| | 9<br>10 | | 4 ppm | | | | Run #6 - 1015<br>Recovery - 1.0' |

PROJECT: Hydrant Fuel System Contamination Investigation

HOLE NO. LAFBHF-27

ENG FORM 5056A-R, AUG 94 (Proponent: CECW-EG)

# HTRW DRILLING LOG

| | | |
|---|---|---|
| DISTRICT: Omaha | | HOLE NUMBER: LAFBHF-27 |
| 1. COMPANY NAME: USACE | 2. DRILL SUBCONTRACTOR: N/A | SHEET 1 OF 2 SHEETS |
| 3. PROJECT: Hydrant Fuel System Contamination Investigation | 4. LOCATION: Langley AFB, VA | |
| 5. NAME OF DRILLER: Joe Morrissey | 6. MANUFACTURER'S DESIGNATION OF DRILL: Simco Earthprobe 200 | |
| 7. SIZES AND TYPES OF DRILLING AND SAMPLING EQUIPMENT: Direct-push rig with 2-inch steel split-spoons to bottom of boring | 8. HOLE LOCATION | |
| | 9. SURFACE ELEVATION | |
| | 10. DATE STARTED: 4/26/04 | 11. DATE COMPLETED: 4/26/04 |
| 12. OVERBURDEN THICKNESS: N/A | 15. DEPTH GROUNDWATER ENCOUNTERED | |
| 13. DEPTH DRILLED INTO ROCK: N/A | 16. DEPTH TO WATER AND ELAPSED TIME AFTER DRILLING COMPLETED: 2.9 ft. immediately after drilling complete | |
| 14. TOTAL DEPTH OF HOLE: 10.0 ft. | 17. OTHER WATER LEVEL MEASUREMENTS (SPECIFY) | |

| 18. GEOTECHNICAL SAMPLES | DISTURBED | UNDISTURBED | 19. TOTAL NUMBER OF CORE BOXES | | | |
|---|---|---|---|---|---|---|
| 20. SAMPLES FOR CHEMICAL ANALYSIS | VOC (VOA+OA1(GRO)) | METALS | OTHER (SPECIFY) (OA2(DRO)) | OTHER (SPECIFY) | OTHER (SPECIFY) | 21. TOLAL CORE RECOVERY % |
| 22. DISPOSITION OF HOLE | BACKFILLED X | MONITORING WELL | OTHER (SPECIFY) | 23. SIGNATURE OF INSPECTOR: [illegible] | | |

LOCATION SKETCH/COMMENTS

SCALE

PROJECT: Hydrant Fuel System Contamination Investigation HOLE NO. LAFBHF-27

ENG FORM 5056-R, AUG 94 (Proponent: CECW-EG)

# HTRW DRILLING LOG (CONTINUATION SHEET)

HOLE NUMBER: LAFBHF-26

PROJECT: Hydrant Fuel System Contamination Investigation

INSPECTOR: R. Grabowski

SHEET 2 OF 2 SHEETS

| ELEV. (a) | DEPTH (b) | DESCRIPTION OF MATERIALS (c) | FIELD SCREENING RESULTS (d) | GEOTECH SAMPLE OR CORE BOX NO. (e) | ANALYTICAL SAMPLE NO. (f) | BLOW COUNT (g) | REMARKS (h) |
|---|---|---|---|---|---|---|---|
| | | Concrete | | | | | |
| | 1 | Poorly Graded Gravel w/ Sand | | | | | |
| | 2 | Sandy Lean Clay (CL) - gray, moist, med. plast. fines, coarse fraction predom. fine sand with occas. gravel. | 6 ppm | | | | Run #1 - 1228 Recovery - 1.5' |
| | 3 | Same as above, gray to brown, petroleum odor. | 20 ppm | | | | Run #2 - 1236 Recovery - 1.5' |
| | 4 | | | | | | |
| | 5 | Clayey Sand (SC) - gray to brown, moist to wet, predom. fine sand, fossiliferous hash, med. plast. fines | Insuff. Sample Volume | | LAFBHF-26-5.5 | | Run #3 - 1243 Recovery - 1.5' |
| | 6 | Same as above, wet to saturated. | 5 ppm | D-1 | | | Run #4 - 1250 Recovery - 1.5' |
| | 7 | Poorly Graded Sand with Silt (SP) - gray to brown, saturated, fine sand, foss. hash, low to no plasticity fines. | 6 ppm | | | | Run #5 - 1304 Recovery - 1.3' |
| | 8 | | | | | | |
| | 9 | | 5 ppm | | | | Run #6 - 1315 Recovery - 1.5' |
| | 10 | Bottom of boring 10.0 ft. | | | | | |

PROJECT: Hydrant Fuel System Contamination Investigation

HOLE NO. LAFBHF-26

ENG FORM 5056A-R, AUG 94 (Proponent: CECW-EG)

# HTRW DRILLING LOG

| | | |
|---|---|---|
| DISTRICT: Omaha | HOLE NUMBER: LAFBHF-26 | |
| 1. COMPANY NAME: USACE | 2. DRILL SUBCONTRACTOR: N/A | SHEET 1 OF 2 SHEETS |
| 3. PROJECT: Hydrant Fuel System Contamination Investigation | 4. LOCATION: Langley AFB, VA | |
| 5. NAME OF DRILLER: Joe Morrissey | 6. MANUFACTURER'S DESIGNATION OF DRILL: Simco Earthprobe 200 | |
| 7. SIZES AND TYPES OF DRILLING AND SAMPLING EQUIPMENT: Direct-push rig with 2-inch steel split-spoons below concrete to bottom of boring. | 8. HOLE LOCATION | |
| | 9. SURFACE ELEVATION | |
| | 10. DATE STARTED: 4/24/04 | 11. DATE COMPLETED: 4/24/04 |
| 12. OVERBURDEN THICKNESS: N/A | 15. DEPTH GROUNDWATER ENCOUNTERED | |
| 13. DEPTH DRILLED INTO ROCK: N/A | 16. DEPTH TO WATER AND ELAPSED TIME AFTER DRILLING COMPLETED: 4.4 ft. immediately after drilling complete | |
| 14. TOTAL DEPTH OF HOLE: 10.0 ft. | 17. OTHER WATER LEVEL MEASUREMENTS (SPECIFY) | |

| 18. GEOTECHNICAL SAMPLES | DISTURBED | UNDISTURBED | 19. TOTAL NUMBER OF CORE BOXES |
|---|---|---|---|
| | X | | |

| 20. SAMPLES FOR CHEMICAL ANALYSIS | VOC | METALS | OTHER (SPECIFY) | OTHER (SPECIFY) | OTHER (SPECIFY) | 21. TOTAL CORE RECOVERY % |
|---|---|---|---|---|---|---|
| | VOA+OA (GRO) | | OA2 (DRO) | | | |

| 22. DISPOSITION OF HOLE | BACKFILLED | MONITORING WELL | OTHER (SPECIFY) | 23. SIGNATURE OF INSPECTOR |
|---|---|---|---|---|
| | X | | | [signature] |

LOCATION SKETCH/COMMENTS

SCALE

PROJECT: Hydrant Fuel System Contamination Investigation HOLE NO. LAFBHF-26

ENG FORM 5056-R, AUG 94 (Proponent: CECW-EG)

# APPENDIX C

## Chemical Quality Assurance Report

Langley AFB Hydrant Fuel System Investigation
Sample Collection Dates: 24 April – 5 May 2004
Laboratory: Environmental Chemistry Branch Laboratory (CEERD-EP-Q)
LIMS #: 7043

## Quality Control Summary Report

The following report is a Level III-type data evaluation/validation report. This was based on the Certificate of Analysis provided by the Environmental Chemistry Branch Laboratory on 7 June 2004.

### Sample Condition and Holding Times

All samples arrived at the lab in good condition at 4°C. Due to the field decision to sample a few additional locations, a trip blank was not available to accompany the shipment sent on 30 April 2004. Despite the omission and based on the data review performed, no cross contamination problems were found or are suspected. All samples were analyzed within holding times.

### Sample Methods and Comparability

All samples were analyzed by EPA SW 846 methodologies as follows: Volatile Organic Compounds (VOC) by Method 5030/8260B (aqueous and soil), and for Gasoline Range Organics (GRO) by Method SW 846 5030/8015B (aqueous and soil), and Diesel Range Organics (DRO) by Method 3510C/8015B (aqueous) 3550B/8015B (soil). A complete list of sample analytical results for all media sampled is shown in Table 1. This table was used to determine chemical contaminant concentrations of soil sample locations along the fuel lines. Detection limits provided adequate sensitivity to adequately determine contaminant presence or absence.

### Representativeness

Field and laboratory quality control procedures were employed to evaluate and confirm representativeness and integrity of the samples, the analyses, and sample results. All trip blanks were free of contamination. A method blank included within analytical batch WG14615 showed low-level contamination for acetone (20 ug/kg) and methylene chloride (1.6 ug/kg) were present below their respective reporting limits. These compounds are considered common lab contaminants and do not impact the usability of the data.

### Bias, Precision and Accuracy

Data quality indicators (DQI) for bias, precision, and accuracy are evaluated as follows. Surrogate spike recovery and matrix spike recovery show whether sample results are accurate and may have been impacted by sample matrix effects. The percent recovery

(%Rec) of these spiked compounds are calculated and used as an indicator of any high / low bias in sample results. Field and laboratory precision is evaluated by the comparison of results in the field sample to it's duplicate, and/or by the comparison of matrix spike and matrix spike duplicate results. Each analytical batch includes a laboratory control sample that is prepared by spiking an interference-free matrix along with the samples within the batch to evaluate the method's overall performance and optimum accuracy. All analyses were successfully completed, and the following summarizes the evaluation of DQIs from the analyses performed.

- All surrogate recoveries from field and QC samples were within ECB lab and SW 846 acceptance ranges except for sample LAFBHF-01-4.0. The 4-bromofluorobenzene surrogate result (123% recovery) exceeded the laboratory's acceptable recovery range of 74% -121%. However, because no fuel related compounds were observed within this sample, the slightly high surrogate recovery does not impact the usability of the data (as non-detections).
- Precision between project samples and their duplicates showed that the (relative percent difference (RPD) was within acceptance criteria for all compounds and analyses. The only exception to this involves methylene chloride detections from the VOC analysis. However, because methylene chloride is a common lab contaminant, its presence is frequently sporadic, and therefore is not used as an indicator of method precision.
- Analytical batch WG14619 showed that recoveries for dichlorodifluoromethane within the MS (163%) and MSD (163%) exceeded laboratory acceptance limits of 60% - 140%. However, this compound was not detected within the primary sample. Therefore, sample data (as non-detects) was not compromised by these results. In addition, a low recovery for isopropylbenzene (65.6%) in the MSD was observed, and low recoveries for n-propylbenzene (65% / 65.7%) and naphthalene (54.4% / 43.2%) were observed in both the MS/MSD, respectively. Due to both MS and MSD reflecting this slight low bias, the precision calculated as the RPD was acceptable. These results indicate a potential for a slight low bias in the results for these analytes within LAFBHF-MW21.
- For analytical batch WG14627, the MS and/or MSD recoveries for 1,2-dibromo-3-chloropropane (59.9% for MS) and hexachlorobutadiene (42.2% / 50.7%) were slightly lower than the acceptable range of 60% - 140%. These compounds have not been detected in any samples, nor are they anticipated to be found onsite, as well as Method 8260B notes them as exhibiting poor purging efficiency. Therefore, data for these compounds is considered acceptable.
- For analytical batch WG 14664, the MS/MSD recoveries for dichlorodifluoromethane (160% / 155%) exceeded the laboratory acceptance limits of 60% - 140%. This compound was not observed in any samples within this batch; therefore no impact to data (as non-detections).
- For analytical batch WG 14648 the MSD for DRO analysis was slightly elevated (142%, exceeding the acceptable range of 60% - 140%). In WG 14665, the MS for dichlorodifluoromethane was also slightly elevated (155%) above the 60% - 140% acceptance limits. However due to the lack of detections of these compounds within project samples, there is no impact to sample data.

- For analytical batch WG 14698, the DRO MS/MSD recoveries were slightly lower (35% / 41%) than the acceptance range 53% - 121%. The LCS was within range with a 57% DRO recovery, indicating method performance as acceptable. However, the primary sample's DRO results were non-detect; and therefore may represent a potential false negative for low-level DRO concentrations.

Data Usability

Based on the results of this data evaluation, the sample data are considered usable to determine the presence of fuel hydrocarbons in the locations with VOC, GRO and DRO detections. The VOC data included benzene/toluene/ethylbenzene/xylenes (BTEX), yet the majority of sample detections for these compounds were very low. Moderate detections of various substituted benzenes and naphthalene hydrocarbons were observed. These compounds elute later in the VOC analyses, indicating the contamination is somewhat degraded and may represent an older release. In general, the data included within this report may be used by the Contractor to estimate quantities of contaminated soil encountered during the installation of Langley AFB's Hydrant Fuel System. It should be noted that Langley AFB stipulates that any soil containing over 50 ppm of TPH needs to be disposed of off-site.

| Sample ID | LAFBHF-MW21 | | LAFBHF-25-5.0 | | LAFBHF-26-5.5 | | LAFBHF-24-4.5 | | LAFBHF-22-4.5 | | LAFBHF-21-4.5 | | LAFBHF-23-4.5 | |
|---|---|---|---|---|---|---|---|---|---|---|---|---|---|---|
| Sample Date | 25-Apr-04 | | 24-Apr-04 | | 24-Apr-04 | | 24-Apr-04 | | 25-Apr-04 | | 25-Apr-04 | | 25-Apr-04 | |
| Matrix | Water | | Soil | | Soil | | Soil | | Soil | | Soil | | Soil | |
| | Results | Qual | Results | Qual | Results | Qual | Results | Qual | Results | Qual | Results | Qual | Results | Qual |
| Dichlorodifluoromethane | 5.0 | U | 62.0 | U | 74.0 | U | 11.0 | U | 12.0 | U | 12.0 | U | 13.0 | U |
| Chloromethane | 2.0 | U | 31.0 | U | 37.0 | U | 5.4 | U | 6.1 | U | 6.0 | U | 6.6 | U |
| Vinyl Chloride | 2.0 | U | 31.0 | U | 37.0 | U | 5.4 | U | 6.1 | U | 6.0 | U | 6.6 | U |
| Bromomethane | 2.0 | U | 31.0 | U | 37.0 | U | 5.4 | U | 6.1 | U | 6.0 | U | 6.6 | U |
| Chloroethane | 2.0 | U | 62.0 | U | 74.0 | U | 11.0 | U | 12.0 | U | 12.0 | U | 13.0 | U |
| Trichlorofluoromethane | 5.0 | U | 31.0 | U | 37.0 | U | 5.4 | U | 6.1 | U | 6.0 | U | 6.6 | U |
| Acetone | 25.0 | U | 972.0 | B | 220.0 | JB | 26.0 | JB | 55.0 | JB | 47.0 | JB | 66.0 | U |
| 1,1 -Dichloroethene | 2.0 | U | 31.0 | U | 37.0 | U | 5.4 | U | 6.1 | U | 6.0 | U | 6.6 | U |
| Methylene Chloride | 2.0 | U | 31.0 | U | 37.0 | U | 5.4 | U | 6.1 | U | 6.0 | U | 6.6 | U |
| Carbon Disulfide | 0.5 | J | 31.0 | U | 37.0 | U | 5.4 | U | 6.1 | U | 6.0 | U | 6.6 | U |
| trans-1,2-Dichloroethene | 2.0 | U | 31.0 | U | 37.0 | U | 5.4 | U | 6.1 | U | 6.0 | U | 6.6 | U |
| 1,1-Dichloroethane | 2.0 | U | 31.0 | U | 37.0 | U | 5.4 | U | 6.1 | U | 6.0 | U | 6.6 | U |
| 2-Butanone | 25.0 | U | 310.0 | U | 370.0 | U | 50.0 | U | 61.0 | U | 60.0 | U | 66.0 | U |
| 2,2-Dichloropropane | 10.0 | U | 31.0 | U | 37.0 | U | 5.4 | U | 6.1 | U | 6.0 | U | 6.6 | U |
| cis-1,2-Dichloroethene | 2.0 | U | 31.0 | U | 37.0 | U | 5.4 | U | 6.1 | U | 6.0 | U | 6.6 | U |
| Chloroform | 2.0 | U | 31.0 | U | 37.0 | U | 5.4 | U | 6.1 | U | 6.0 | U | 6.6 | U |
| Bromochloromethane | 5.0 | U | 31.0 | U | 37.0 | U | 5.4 | U | 6.1 | U | 6.0 | U | 6.6 | U |
| 1,1,1-Trichloroethane | 2.0 | U | 31.0 | U | 37.0 | U | 5.4 | U | 6.1 | U | 6.0 | U | 6.6 | U |
| 1,1-Dichloropropene | 5.0 | U | 31.0 | U | 37.0 | U | 5.4 | U | 6.1 | U | 6.0 | U | 6.6 | U |
| Carbon Tetrachloride | 2.0 | U | 31.0 | U | 37.0 | U | 5.4 | U | 6.1 | U | 6.0 | U | 6.6 | U |
| 1,2-Dichloroethane | 2.0 | U | 31.0 | U | 37.0 | U | 5.4 | U | 6.1 | U | 6.0 | U | 6.6 | U |
| Benzene | 2.0 | U | 31.0 | U | 37.0 | U | 5.4 | U | 6.1 | U | 6.0 | U | 6.6 | U |
| Trichloroethene | 2.0 | U | 31.0 | U | 37.0 | U | 5.4 | U | 6.1 | U | 6.0 | U | 6.6 | U |
| 1,2-Dichloropropane | 2.0 | U | 31.0 | U | 37.0 | U | 5.4 | U | 6.1 | U | 6.0 | U | 6.6 | U |
| Bromodichloromethane | 2.0 | U | 31.0 | U | 37.0 | U | 5.4 | U | 6.1 | U | 6.0 | U | 6.6 | U |
| Dibromomethane | 5.0 | U | 31.0 | U | 37.0 | U | 5.4 | U | 6.1 | U | 6.0 | U | 6.6 | U |
| 4-Methyl-2-pentanone | 25.0 | U | 310.0 | U | 370.0 | U | 54.0 | U | 61.0 | U | 60.0 | U | 66.0 | U |
| cis-1,3-Dichloropropene | 2.0 | U | 31.0 | U | 37.0 | U | 5.4 | U | 6.1 | U | 6.0 | U | 6.6 | U |
| Toluene | 2.0 | U | 31.0 | U | 37.0 | U | 4.2 | J | 6.1 | U | 6.0 | U | 6.6 | U |
| trans-1,3-Dichloropropene | 2.0 | U | 31.0 | U | 37.0 | U | 5.4 | U | 6.1 | U | 6.0 | U | 6.6 | U |
| 2-Hexanone | 25.0 | U | 310.0 | U | 370.0 | U | 5.4 | U | 61.0 | U | 60.0 | U | 66.0 | U |
| 1,1,2-Trichloroethane | 2.0 | U | 31.0 | U | 37.0 | U | 5.4 | U | 6.1 | U | 6.0 | U | 6.6 | U |
| 1,3-Dichloropropane | 5.0 | U | 31.0 | U | 37.0 | U | 5.4 | U | 6.1 | U | 6.0 | U | 6.6 | U |
| Tetrachloroethene | 2.0 | U | 31.0 | U | 37.0 | U | 5.4 | U | 6.1 | U | 6.0 | U | 6.6 | U |
| Dibromochloromethane | 2.0 | U | 31.0 | U | 37.0 | U | 5.4 | U | 6.1 | U | 6.0 | U | 6.6 | U |
| 1,2-Dibromoethane | 5.0 | U | 31.0 | U | 37.0 | U | 5.4 | U | 6.1 | U | 6.0 | U | 6.6 | U |
| Chlorobenzene | 2.0 | U | 31.0 | U | 37.0 | U | 5.4 | U | 6.1 | U | 6.0 | U | 6.6 | U |
| Ethylbenzene | 1.3 | J | 31.0 | U | 37.0 | U | 5.4 | U | 6.1 | U | 2.7 | J | 6.6 | U |
| 1,1,1,2-Tetrachloroethane | 5.0 | U | 31.0 | U | 37.0 | U | 5.4 | U | 6.1 | U | 6.0 | U | 6.6 | U |
| meta-/para-Xylenes | 2.0 | U | 31.0 | U | 37.0 | U | 1.2 | J | 6.1 | U | 4.8 | J | 6.6 | U |
| ortho-Xylene | 2.0 | U | 31.0 | U | 37.0 | U | 5.4 | U | 6.1 | U | 1.6 | J | 6.6 | U |
| Styrene | 2.0 | U | 31.0 | U | 37.0 | U | 5.4 | U | 6.1 | U | 6.0 | U | 6.6 | U |
| Isopropylbenzene | 119.0 | | 376.0 | | 80.9 | | 5.4 | U | 6.1 | U | 10.6 | | 6.6 | U |
| Bromoform | 2.0 | U | 31.0 | U | 37.0 | U | 5.4 | U | 6.1 | U | 6.0 | U | 6.6 | U |
| 1,1,2,2-Tetrachloroethane | 2.0 | U | 31.0 | U | 37.0 | U | 5.4 | U | 6.1 | U | 6.0 | U | 6.6 | U |
| 1,2,3-Trichloropropane | 5.0 | U | 31.0 | U | 37.0 | U | 5.4 | U | 6.1 | U | 6.0 | U | 6.6 | U |
| n-Propylbenzene | 177.0 | | 504.0 | | 138.0 | | 5.4 | U | 6.1 | U | 11.2 | | 6.6 | U |
| Bromobenzene | 5.0 | U | 31.0 | U | 37.0 | U | 5.4 | U | 6.1 | U | 6.0 | U | 6.6 | U |
| 1,3,5-Trimethylbensene | 5.0 | U | 31.0 | U | 37.0 | U | 5.4 | U | 6.1 | U | 1.9 | J | 6.6 | U |
| 2-chlorotoluene | 5.0 | U | 31.0 | U | 37.0 | U | 5.4 | U | 6.1 | U | 6.0 | U | 6.6 | U |
| 4-chlorotoluene | 5.0 | U | 31.0 | U | 37.0 | U | 5.4 | U | 6.1 | U | 6.0 | U | 6.6 | U |
| tert-Butylbenzene | 5.0 | J | 589.0 | | 53.4 | | 5.4 | U | 6.1 | U | 6.0 | U | 6.6 | U |
| 1,2,4-Trimethylbenzene | 5.0 | U | 31.0 | U | 37.0 | U | 5.4 | U | 6.1 | U | 5.0 | J | 6.6 | U |
| sec-Butylbenzene | 34.0 | | 619.0 | | 227.0 | | 5.4 | U | 6.1 | U | 1.9 | J | 6.6 | U |
| p-Isopropyltoluene | 5.0 | U | 31.0 | U | 37.0 | U | 5.4 | U | 6.1 | U | 6.0 | U | 6.6 | U |
| 1,3-Dichlorobenzene | 5.0 | U | 31.0 | U | 37.0 | U | 5.4 | U | 6.1 | U | 6.0 | U | 6.6 | U |
| 1,4-Dichlorobenzene | 5.0 | U | 31.0 | U | 37.0 | U | 5.4 | U | 6.1 | U | 6.0 | U | 6.6 | U |
| n-Butylbenzene | 5.4 | | 125.0 | | 32.0 | J | 5.4 | U | 6.1 | U | 6.0 | U | 6.6 | U |
| 1,2-Dichlorobenzene | 5.0 | U | 31.0 | U | 37.0 | U | 5.4 | U | 6.1 | U | 6.0 | U | 6.6 | U |
| 1,2-Dibromo-3-chloropropane | 10.0 | U | 160.0 | U | 180.0 | U | 27.0 | U | 31.0 | U | 30.0 | U | 33.0 | U |
| 1,2,4-Trichlorobenzene | 25.0 | U | 160.0 | U | 180.0 | U | 27.0 | U | 31.0 | U | 30.0 | U | 33.0 | U |
| Hexachlorobutadiene | 25.0 | U | 160.0 | U | 180.0 | U | 27.0 | U | 31.0 | U | 30.0 | U | 33.0 | U |
| Naphthalene | 168.0 | | 476.0 | | 180.0 | U | 27.0 | U | 31.0 | U | 20.0 | J | 33.0 | U |
| 1,2,3-Trichlorobenzene | 25.0 | U | 160.0 | U | 180.0 | U | 27.0 | U | 31.0 | U | 30.0 | U | 33.0 | U |
| Soil units: ug/kg. | | | | | | | | | | | | | | |
| Water units: ug/L. | | | | | | | | | | | | | | |
| Diesel Range Organics | 18000 | D | 76 | | 13 | U | 12 | U | 12 | U | 12 | U | 13 | U |
| Gasoline Range Organics | 1820 | | 53 | | 22 | | 0.14 | | 0.1 | U | 0.21 | | 0.1 | U |
| GRO / DRO soil units mg/kg | | | | | | | | | | | | | | |
| GRO/DRO water units: ug/L. | | | | | | | | | | | | | | |

| Sample ID | LAFBHF-20-4.5 | | LAFBHF-27-4.0 | | LAFBHF-28-4.0 | | LAFBHF-29-4.0 | | LAFBHF-MW01 | | LAFBHF01-4.0 | | LAFBHF-MW03 | |
|---|---|---|---|---|---|---|---|---|---|---|---|---|---|---|
| Sample Date | 25-Apr-04 | | 26-Apr-04 | | 26-Apr-04 | | 26-Apr-04 | | 27-Apr-04 | | 27-Apr-04 | | 28-Apr-04 | |
| Matrix | Soil | | Soil | | Soil | | Soil | | Water | | Soil | | Water | |
| | Results | Qual | Results | Qual | Results | Qual | Results | Qual | Results | Qual | Results | Qual | Results | Qual |
| Dichlorodifluoromethane | 14.0 | U | 12.0 | U | 11.0 | U | 13.0 | U | 5.0 | U | 11.0 | U | 5.0 | U |
| Chloromethane | 6.8 | U | 6.2 | U | 5.5 | U | 6.4 | U | 2.0 | U | 5.7 | U | 2.0 | U |
| Vinyl Chloride | 6.8 | U | 6.2 | U | 5.5 | U | 6.4 | U | 2.0 | U | 5.7 | U | 2.0 | U |
| Bromomethane | 6.8 | U | 6.2 | U | 5.5 | U | 6.4 | U | 2.0 | U | 5.7 | U | 2.0 | U |
| Chloroethane | 14.0 | U | 12.0 | U | 11.0 | U | 13.0 | U | 2.0 | U | 11.0 | U | 2.0 | U |
| Trichlorofluoromethane | 6.8 | U | 6.2 | U | 5.5 | U | 6.4 | U | 5.0 | U | 5.7 | U | 5.0 | U |
| Acetone | 60.0 | JB | 62.0 | U | 55.0 | U | 64.0 | U | 25.0 | U | 48.0 | J | 25.0 | U |
| 1,1 -Dichloroethene | 6.8 | U | 6.2 | U | 5.5 | U | 6.4 | U | 2.0 | U | 5.7 | U | 2.0 | U |
| Methylene Chloride | 6.8 | U | 9.3 | | 7.3 | | 9.2 | | 2.0 | U | 6.5 | | 2.0 | U |
| Carbon Disulfide | 6.8 | U | 6.2 | U | 5.5 | U | 6.4 | U | 2.0 | U | 5.7 | U | 2.0 | U |
| trans-1,2-Dichloroethene | 6.8 | U | 6.2 | U | 5.5 | U | 6.4 | U | 2.0 | U | 5.7 | U | 2.0 | U |
| 1,1-Dichloroethane | 6.8 | U | 6.2 | U | 5.5 | U | 6.4 | U | 2.0 | U | 5.7 | U | 2.0 | U |
| 2-Butanone | 68.0 | U | 62.0 | U | 55.0 | U | 64.0 | U | 25.0 | U | 57.0 | U | 25.0 | U |
| 2,2-Dichloropropane | 6.8 | U | 6.2 | U | 5.5 | U | 6.4 | U | 10.0 | U | 5.7 | U | 10.0 | U |
| cis-1,2-Dichloroethene | 6.8 | U | 6.2 | U | 5.5 | U | 6.4 | U | 2.0 | U | 5.7 | U | 2.0 | U |
| Chloroform | 6.8 | U | 6.2 | U | 5.5 | U | 6.4 | U | 2.0 | U | 5.7 | U | 2.0 | U |
| Bromochloromethane | 6.8 | U | 6.2 | U | 5.5 | U | 6.4 | U | 5.0 | U | 5.7 | U | 5.0 | U |
| 1,1,1-Trichloroethane | 6.8 | U | 6.2 | U | 5.5 | U | 6.4 | U | 2.0 | U | 5.7 | U | 2.0 | U |
| 1,1-Dichloropropene | 6.8 | U | 6.2 | U | 5.5 | U | 6.4 | U | 5.0 | U | 5.7 | U | 5.0 | U |
| Carbon Tetrachloride | 6.8 | U | 6.2 | U | 5.5 | U | 6.4 | U | 2.0 | U | 5.7 | U | 2.0 | U |
| 1,2-Dichloroethane | 6.8 | U | 6.2 | U | 5.5 | U | 6.4 | U | 2.0 | U | 5.7 | U | 2.0 | U |
| Benzene | 6.8 | U | 6.2 | U | 5.5 | U | 6.4 | U | 2.0 | U | 5.7 | U | 2.0 | U |
| Trichloroethene | 6.8 | U | 6.2 | U | 5.5 | U | 6.4 | U | 2.0 | U | 5.7 | U | 2.0 | U |
| 1,2-Dichloropropane | 6.8 | U | 6.2 | U | 5.5 | U | 6.4 | U | 2.0 | U | 5.7 | U | 2.0 | U |
| Bromodichloromethane | 6.8 | U | 6.2 | U | 5.5 | U | 6.4 | U | 2.0 | U | 5.7 | U | 2.0 | U |
| Dibromomethane | 6.8 | U | 6.2 | U | 5.5 | U | 6.4 | U | 5.0 | U | 5.7 | U | 5.0 | U |
| 4-Methyl-2-pentanone | 68.0 | U | 62.0 | U | 55.0 | U | 64.0 | U | 25.0 | U | 57.0 | U | 25.0 | U |
| cis-1,3-Dichloropropene | 6.8 | U | 6.2 | U | 5.5 | U | 6.4 | U | 2.0 | U | 5.7 | U | 2.0 | U |
| Toluene | 6.8 | U | 6.2 | U | 5.5 | U | 6.4 | U | 2.0 | U | 5.7 | U | 2.0 | U |
| trans-1,3-Dichloropropene | 6.8 | U | 6.2 | U | 5.5 | U | 6.4 | U | 2.0 | U | 5.7 | U | 2.0 | U |
| 2-Hexanone | 68.0 | U | 62.0 | U | 55.0 | U | 64.0 | U | 25.0 | U | 57.0 | U | 25.0 | U |
| 1,1,2-Trichloroethane | 6.8 | U | 6.2 | U | 5.5 | U | 6.4 | U | 2.0 | U | 5.7 | U | 2.0 | U |
| 1,3-Dichloropropane | 6.8 | U | 6.2 | U | 5.5 | U | 6.4 | U | 5.0 | U | 5.7 | U | 5.0 | U |
| Tetrachloroethene | 6.8 | U | 6.2 | U | 5.5 | U | 6.4 | U | 2.0 | U | 5.7 | U | 2.0 | U |
| Dibromochloromethane | 6.8 | U | 6.2 | U | 5.5 | U | 6.4 | U | 2.0 | U | 5.7 | U | 2.0 | U |
| 1,2-Dibromoethane | 6.8 | U | 6.2 | U | 5.5 | U | 6.4 | U | 5.0 | U | 5.7 | U | 5.0 | U |
| Chlorobenzene | 6.8 | U | 6.2 | U | 5.5 | U | 6.4 | U | 2.0 | U | 5.7 | U | 2.0 | U |
| Ethylbenzene | 6.8 | U | 6.2 | U | 5.5 | U | 6.4 | U | 2.0 | U | 5.7 | U | 2.0 | U |
| 1,1,1,2-Tetrachloroethane | 6.8 | U | 6.2 | U | 5.5 | U | 6.4 | U | 5.0 | U | 5.7 | U | 5.0 | U |
| meta-/para-Xylenes | 6.8 | U | 6.2 | U | 5.5 | U | 6.4 | U | 2.0 | U | 5.7 | U | 2.0 | U |
| ortho-Xylene | 6.8 | U | 6.2 | U | 5.5 | U | 6.4 | U | 2.0 | U | 5.7 | U | 2.0 | U |
| Styrene | 6.8 | U | 6.2 | U | 5.5 | U | 6.4 | U | 2.0 | U | 5.7 | U | 2.0 | U |
| Isopropylbenzene | 6.8 | U | 6.2 | U | 5.5 | U | 6.4 | U | 5.0 | U | 5.7 | U | 5.0 | U |
| Bromoform | 6.8 | U | 6.2 | U | 5.5 | U | 6.4 | U | 2.0 | U | 5.7 | U | 2.0 | U |
| 1,1,2,2-Tetrachloroethane | 6.8 | U | 6.2 | U | 5.5 | U | 6.4 | U | 2.0 | U | 5.7 | U | 2.0 | U |
| 1,2,3-Trichloropropane | 6.8 | U | 6.2 | U | 5.5 | U | 6.4 | U | 5.0 | U | 5.7 | U | 5.0 | U |
| n-Propylbenzene | 6.8 | U | 6.2 | U | 5.5 | U | 6.4 | U | 5.0 | U | 5.7 | U | 5.0 | U |
| Bromobenzene | 6.8 | U | 6.2 | U | 5.5 | U | 6.4 | U | 5.0 | U | 5.7 | U | 5.0 | U |
| 1,3,5-Trimethylbensene | 6.8 | U | 6.2 | U | 5.5 | U | 6.4 | U | 5.0 | U | 5.7 | U | 5.0 | U |
| 2-chlorotoluene | 6.8 | U | 6.2 | U | 5.5 | U | 6.4 | U | 5.0 | U | 5.7 | U | 5.0 | U |
| 4-chlorotoluene | 6.8 | U | 6.2 | U | 5.5 | U | 6.4 | U | 5.0 | U | 5.7 | U | 5.0 | U |
| tert-Butylbenzene | 1.7 | JB | 6.2 | U | 5.5 | U | 6.4 | U | 5.0 | U | 5.7 | U | 5.0 | U |
| 1,2,4-Trimethylbenzene | 6.8 | U | 6.2 | U | 5.5 | U | 6.4 | U | 5.0 | U | 5.7 | U | 5.0 | U |
| sec-Butylbenzene | 7.9 | | 6.2 | U | 5.5 | U | 6.4 | U | 5.0 | U | 5.7 | U | 5.0 | U |
| p-Isopropyltoluene | 6.8 | U | 6.2 | U | 5.5 | U | 6.4 | U | 5.0 | U | 5.7 | U | 5.0 | U |
| 1,3-Dichlorobenzene | 6.8 | U | 6.2 | U | 5.5 | U | 6.4 | U | 5.0 | U | 5.7 | U | 5.0 | U |
| 1,4-Dichlorobenzene | 6.8 | U | 6.2 | U | 5.5 | U | 6.4 | U | 5.0 | U | 5.7 | U | 5.0 | U |
| n-Butylbenzene | 6.8 | U | 6.2 | U | 5.5 | U | 6.4 | U | 5.0 | U | 5.7 | U | 5.0 | U |
| 1,2-Dichlorobenzene | 6.8 | U | 6.2 | U | 5.5 | U | 6.4 | U | 5.0 | U | 5.7 | U | 5.0 | U |
| 1,2-Dibromo-3-chloropropane | 34.0 | U | 31.0 | U | 27.0 | U | 32.0 | U | 10.0 | U | 28.0 | U | 10.0 | U |
| 1,2,4-Trichlorobenzene | 34.0 | U | 31.0 | U | 27.0 | U | 32.0 | U | 25.0 | U | 28.0 | U | 25.0 | U |
| Hexachlorobutadiene | 34.0 | U | 31.0 | U | 27.0 | U | 32.0 | U | 25.0 | U | 28.0 | U | 25.0 | U |
| Naphthalene | 34.0 | U | 31.0 | U | 27.0 | U | 32.0 | U | 25.0 | U | 28.0 | U | 25.0 | U |
| 1,2,3-Trichlorobenzene | 34.0 | U | 31.0 | U | 27.0 | U | 32.0 | U | 25.0 | U | 28.0 | U | 25.0 | U |
| Soil units: ug/kg. | | | | | | | | | | | | | | |
| Water units: ug/L. | | | | | | | | | | | | | | |
| Diesel Range Organics | 14 | U | 160 | | 11 | U | 13 | U | 210 | U | 11 | U | 200 | U |
| Gasoline Range Organics | 2.6 | | 0.1 | U | 0.1 | U | 0.1 | U | 100 | U | 0.56 | | 100 | U |
| GRO/DRO soil units mg/kg | | | | | | | | | | | | | | |
| GRO/DRO water units: ug/L. | | | | | | | | | | | | | | |

| Sample ID | LAFBHF-MW29 | | LAFBHF-03-4.0 | | LAFBHF-02-4.0 | | LAFBHF-MW30 | | LAFBHF-30-4.0 | | LAFBHF-19-4.0 | | LAFBHF-18-4.0 | |
|---|---|---|---|---|---|---|---|---|---|---|---|---|---|---|
| Sample Date | 28-Apr-04 | | 28-Apr-04 | | 28-Apr-04 | | 29-Apr-04 | | 29-Apr-04 | | 29-Apr-04 | | 29-Apr-04 | |
| Matrix | Water | | Soil | | Soil | | Water | | Soil | | Soil | | Soil | |
| | Results | Qual | Results | Qual | Results | Qual | Results | Qual | Results | Qual | Results | Qual | Results | Qual |
| Dichlorodifluoromethane | 5.0 | U | 12.0 | U | 12.0 | U | 5.0 | U | 12.0 | U | 12.0 | U | 12.0 | U |
| Chloromethane | 2.0 | U | 5.9 | U | 6.2 | U | 2.0 | U | 6.2 | U | 6.2 | U | 6.1 | U |
| Vinyl Chloride | 2.0 | U | 5.9 | U | 6.2 | U | 2.0 | U | 6.2 | U | 6.2 | U | 6.1 | U |
| Bromomethane | 2.0 | U | 5.9 | U | 6.2 | U | 2.0 | U | 6.2 | U | 6.2 | U | 6.1 | U |
| Chloroethane | 2.0 | U | 12.0 | U | 12.0 | U | 2.0 | U | 12.0 | U | 12.0 | U | 12.0 | U |
| Trichlorofluoromethane | 5.0 | U | 5.9 | U | 6.2 | U | 5.0 | U | 6.2 | U | 6.2 | U | 6.1 | U |
| Acetone | 25.0 | U | 59.0 | U | 20.6 | | 10.0 | J | 62.0 | U | 62.0 | U | 61.0 | U |
| 1,1 -Dichloroethene | 2.0 | U | 5.9 | U | 6.2 | U | 2.0 | U | 6.2 | U | 6.2 | U | 6.1 | U |
| Methylene Chloride | 2.0 | U | 7.3 | | 6.3 | | 2.0 | U | 2.0 | J | 7.2 | | 5.6 | J |
| Carbon Disulfide | 2.0 | U | 5.9 | U | 6.2 | U | 2.0 | U | 6.2 | U | 6.2 | U | 6.1 | U |
| trans-1,2-Dichloroethene | 2.0 | U | 5.9 | U | 6.2 | U | 2.0 | U | 6.2 | U | 6.2 | U | 6.1 | U |
| 1,1-Dichloroethane | 2.0 | U | 5.9 | U | 6.2 | U | 2.0 | U | 6.2 | U | 6.2 | U | 6.1 | U |
| 2-Butanone | 25.0 | U | 59.0 | U | 62.0 | U | 25.0 | U | 62.0 | U | 62.0 | U | 61.0 | U |
| 2,2-Dichloropropane | 10.0 | U | 5.9 | U | 6.2 | U | 10.0 | U | 6.2 | U | 6.2 | U | 6.1 | U |
| cis-1,2-Dichloroethene | 2.0 | U | 5.9 | U | 6.2 | U | 2.0 | U | 6.2 | U | 6.2 | U | 6.1 | U |
| Chloroform | 2.0 | U | 5.9 | U | 6.2 | U | 2.0 | U | 6.2 | U | 6.2 | U | 6.1 | U |
| Bromochloromethane | 5.0 | U | 5.9 | U | 6.2 | U | 5.0 | U | 6.2 | U | 6.2 | U | 6.1 | U |
| 1,1,1-Trichloroethane | 2.0 | U | 5.9 | U | 6.2 | U | 2.0 | U | 6.2 | U | 6.2 | U | 6.1 | U |
| 1,1-Dichloropropene | 5.0 | U | 5.9 | U | 6.2 | U | 5.0 | U | 6.2 | U | 6.2 | U | 6.1 | U |
| Carbon Tetrachloride | 2.0 | U | 5.9 | U | 6.2 | U | 2.0 | U | 6.2 | U | 6.2 | U | 6.1 | U |
| 1,2-Dichloroethane | 2.0 | U | 5.9 | U | 6.2 | U | 2.0 | U | 6.2 | U | 6.2 | U | 6.1 | U |
| Benzene | 2.0 | U | 5.9 | U | 6.2 | U | 1.0 | J | 6.2 | U | 6.2 | U | 6.1 | U |
| Trichloroethene | 2.0 | U | 5.9 | U | 6.2 | U | 2.0 | U | 6.2 | U | 6.2 | U | 6.1 | U |
| 1,2-Dichloropropane | 2.0 | U | 5.9 | U | 6.2 | U | 2.0 | U | 6.2 | U | 6.2 | U | 6.1 | U |
| Bromodichloromethane | 2.0 | U | 5.9 | U | 6.2 | U | 2.0 | U | 6.2 | U | 6.2 | U | 6.1 | U |
| Dibromomethane | 5.0 | U | 5.9 | U | 6.2 | U | 5.0 | U | 6.2 | U | 6.2 | U | 6.1 | U |
| 4-Methyl-2-pentanone | 25.0 | U | 59.0 | U | 62.0 | U | 25.0 | U | 62.0 | U | 62.0 | U | 61.0 | U |
| cis-1,3-Dichloropropene | 2.0 | U | 5.9 | U | 6.2 | U | 2.0 | U | 6.2 | U | 6.2 | U | 6.1 | U |
| Toluene | 2.0 | U | 5.9 | U | 6.2 | U | 2.0 | U | 6.2 | U | 6.2 | U | 6.1 | U |
| trans-1,3-Dichloropropene | 2.0 | U | 5.9 | U | 6.2 | U | 2.0 | U | 6.2 | U | 6.2 | U | 6.1 | U |
| 2-Hexanone | 25.0 | U | 59.0 | U | 62.0 | U | 25.0 | U | 62.0 | U | 62.0 | U | 61.0 | U |
| 1,1,2-Trichloroethane | 2.0 | U | 5.9 | U | 6.2 | U | 2.0 | U | 6.2 | U | 6.2 | U | 6.1 | U |
| 1,3-Dichloropropane | 5.0 | U | 5.9 | U | 6.2 | U | 5.0 | U | 6.2 | U | 6.2 | U | 6.1 | U |
| Tetrachloroethene | 2.0 | U | 5.9 | U | 6.2 | U | 2.0 | U | 6.2 | U | 6.2 | U | 6.1 | U |
| Dibromochloromethane | 2.0 | U | 5.9 | U | 6.2 | U | 2.0 | U | 6.2 | U | 6.2 | U | 6.1 | U |
| 1,2-Dibromoethane | 5.0 | U | 5.9 | U | 6.2 | U | 5.0 | U | 6.2 | U | 6.2 | U | 6.1 | U |
| Chlorobenzene | 2.0 | U | 5.9 | U | 6.2 | U | 2.0 | U | 6.2 | U | 6.2 | U | 6.1 | U |
| Ethylbenzene | 2.0 | U | 5.9 | U | 6.2 | U | 1.3 | J | 6.2 | U | 6.2 | U | 6.1 | U |
| 1,1,1,2-Tetrachloroethane | 5.0 | U | 5.9 | U | 6.2 | U | 5.0 | U | 6.2 | U | 6.2 | U | 6.1 | U |
| meta-/para-Xylenes | 2.0 | U | 5.9 | U | 6.2 | U | 2.0 | U | 6.2 | U | 6.2 | U | 6.1 | U |
| ortho-Xylene | 2.0 | U | 5.9 | U | 6.2 | U | 0.6 | J | 6.2 | U | 6.2 | U | 6.1 | U |
| Styrene | 2.0 | U | 5.9 | U | 6.2 | U | 2.0 | U | 6.2 | U | 6.2 | U | 6.1 | U |
| Isopropylbenzene | 5.0 | U | 5.9 | U | 6.2 | U | 135.0 | | 48.5 | | 6.2 | U | 6.1 | U |
| Bromoform | 2.0 | U | 5.9 | U | 6.2 | U | 2.0 | U | 6.2 | U | 6.2 | U | 6.1 | U |
| 1,1,2,2-Tetrachloroethane | 2.0 | U | 5.9 | U | 6.2 | U | 2.0 | U | 6.2 | U | 6.2 | U | 6.1 | U |
| 1,2,3-Trichloropropane | 5.0 | U | 5.9 | U | 6.2 | U | 5.0 | U | 6.2 | U | 6.2 | U | 6.1 | U |
| n-Propylbenzene | 5.0 | U | 5.9 | U | 6.2 | U | 215.0 | E | 101.0 | | 6.2 | U | 6.1 | U |
| Bromobenzene | 5.0 | U | 5.9 | U | 6.2 | U | 5.0 | U | 6.2 | U | 6.2 | U | 6.1 | U |
| 1,3,5-Trimethylbensene | 5.0 | U | 5.9 | U | 6.2 | U | 4.8 | J | 6.2 | U | 6.2 | U | 6.1 | U |
| 2-chlorotoluene | 5.0 | U | 5.9 | U | 6.2 | U | 5.0 | U | 6.2 | U | 6.2 | U | 6.1 | U |
| 4-chlorotoluene | 5.0 | U | 5.9 | U | 6.2 | U | 5.0 | U | 6.2 | U | 6.2 | U | 6.1 | U |
| tert-Butylbenzene | 5.0 | U | 5.9 | U | 6.2 | U | 3.7 | J | 3.7 | J | 6.2 | U | 6.1 | U |
| 1,2,4-Trimethylbenzene | 5.0 | U | 5.9 | U | 6.2 | U | 269.0 | E | 37.5 | | 6.2 | U | 6.1 | U |
| sec-Butylbenzene | 5.0 | U | 5.9 | U | 6.2 | U | 38.2 | | 45.7 | | 6.2 | U | 6.1 | U |
| p-Isopropyltoluene | 5.0 | U | 5.9 | U | 6.2 | U | 11.3 | | 17.9 | | 6.2 | U | 6.1 | U |
| 1,3-Dichlorobenzene | 5.0 | U | 5.9 | U | 6.2 | U | 5.0 | U | 6.2 | U | 6.2 | U | 6.1 | U |
| 1,4-Dichlorobenzene | 5.0 | U | 5.9 | U | 6.2 | U | 5.0 | U | 6.2 | U | 6.2 | U | 6.1 | U |
| n-Butylbenzene | 5.0 | U | 5.9 | U | 6.2 | U | 28.4 | | 45.5 | | 6.2 | U | 6.1 | U |
| 1,2-Dichlorobenzene | 5.0 | U | 5.9 | U | 6.2 | U | 5.0 | U | 6.2 | U | 6.2 | U | 6.1 | U |
| 1,2-Dibromo-3-chloropropane | 10.0 | U | 29.0 | U | 31.0 | U | 10.0 | U | 31.0 | U | 31.0 | U | 30.0 | U |
| 1,2,4-Trichlorobenzene | 25.0 | U | 29.0 | U | 31.0 | U | 25.0 | U | 31.0 | U | 31.0 | U | 30.0 | U |
| Hexachlorobutadiene | 25.0 | U | 29.0 | U | 31.0 | U | 25.0 | U | 31.0 | U | 31.0 | U | 30.0 | U |
| Naphthalene | 25.0 | U | 29.0 | U | 31.0 | U | 273.0 | E | 84.3 | | 31.0 | U | 30.0 | U |
| 1,2,3-Trichlorobenzene | 25.0 | U | 29.0 | U | 31.0 | U | 25.0 | U | 31.0 | U | 31.0 | U | 30.0 | U |
| Soil units: ug/kg. | | | | | | | | | | | | | | |
| Water units: ug/L. | | | | | | | | | | | | | | |
| Diesel Range Organics | 200 | U | 12 | U | 13 | U | 17000 | D | 1100 | | 12 | U | 13 | U |
| Gasoline Range Organics | 100 | U | 0.1 | U | 0.1 | U | 1300 | | 12 | | 0.1 | U | 0.1 | U |
| GRO/DRO soil units mg/kg | | | | | | | | | | | | | | |
| GRO/DRO water units: ug/L. | | | | | | | | | | | | | | |

| Sample ID | LAFBHF-17-4.0 | | LAFBHF-16-4.0 | | LAFBHF-14-4.0 | | LAFBHF-15-4.0 | | LAFBHF-13-4.0 | | LAFBHF-12-4.0 | | LAFBHF-11-4.0 | |
|---|---|---|---|---|---|---|---|---|---|---|---|---|---|---|
| Sample Date | 29-Apr-04 | | 29-Apr-04 | | 29-Apr-04 | | 30-Apr-04 | | 30-Apr-04 | | 30-Apr-04 | | 30-Apr-04 | |
| Matrix | Soil | | Soil | | Soil | | Soil | | Soil | | Soil | | Soil | |
| | Results | Qual | Results | Qual | Results | Qual | Results | Qual | Results | Qual | Results | Qual | Results | Qual |
| Dichlorodifluoromethane | 11.0 | U | 12.0 | U | 13.0 | U | 12.0 | U | 12.0 | U | 12.0 | U | 12.0 | U |
| Chloromethane | 5.6 | U | 6.0 | U | 6.4 | U | 5.8 | U | 5.8 | U | 5.9 | U | 6.0 | U |
| Vinyl Chloride | 5.6 | U | 6.0 | U | 6.4 | U | 5.8 | U | 5.8 | U | 5.9 | U | 6.0 | U |
| Bromomethane | 5.6 | U | 6.0 | U | 6.4 | U | 5.8 | U | 5.8 | U | 5.9 | U | 6.0 | U |
| Chloroethane | 12.0 | U | 12.0 | U | 13.0 | U | 12.0 | U | 12.0 | U | 12.0 | U | 12.0 | U |
| Trichlorofluoromethane | 5.6 | U | 6.0 | U | 6.4 | U | 5.8 | U | 5.8 | U | 5.9 | U | 6.0 | U |
| Acetone | 56.0 | U | 60.0 | U | 64.0 | U | 58.0 | U | 58.0 | U | 59.0 | U | 60.0 | U |
| 1,1 -Dichloroethene | 5.6 | U | 6.0 | U | 6.4 | U | 5.8 | U | 5.8 | U | 5.9 | U | 6.0 | U |
| Methylene Chloride | 4.0 | J | 2.4 | J | 2.7 | J | 1.7 | J | 2.2 | J | 1.4 | J | 1.7 | J |
| Carbon Disulfide | 5.6 | U | 6.0 | U | 6.4 | U | 5.8 | U | 5.8 | U | 5.9 | U | 6.0 | U |
| trans-1,2-Dichloroethene | 5.6 | U | 6.0 | U | 6.4 | U | 5.8 | U | 5.8 | U | 5.9 | U | 6.0 | U |
| 1,1-Dichloroethane | 5.6 | U | 6.0 | U | 6.4 | U | 5.8 | U | 5.8 | U | 5.9 | U | 6.0 | U |
| 2-Butanone | 56.0 | U | 60.0 | U | 64.0 | U | 58.0 | U | 58.0 | U | 59.0 | U | 60.0 | U |
| 2,2-Dichloropropane | 5.6 | U | 6.0 | U | 6.4 | U | 5.8 | U | 5.8 | U | 5.9 | U | 6.0 | U |
| cis-1,2-Dichloroethene | 5.6 | U | 6.0 | U | 6.4 | U | 5.8 | U | 5.8 | U | 5.9 | U | 6.0 | U |
| Chloroform | 5.6 | U | 6.0 | U | 6.4 | U | 5.8 | U | 5.8 | U | 5.9 | U | 6.0 | U |
| Bromochloromethane | 5.6 | U | 6.0 | U | 6.4 | U | 5.8 | U | 5.8 | U | 5.9 | U | 6.0 | U |
| 1,1,1-Trichloroethane | 5.6 | U | 6.0 | U | 6.4 | U | 5.8 | U | 5.8 | U | 5.9 | U | 6.0 | U |
| 1,1-Dichloropropene | 5.6 | U | 6.0 | U | 6.4 | U | 5.8 | U | 5.8 | U | 5.9 | U | 6.0 | U |
| Carbon Tetrachloride | 5.6 | U | 6.0 | U | 6.4 | U | 5.8 | U | 5.8 | U | 5.9 | U | 6.0 | U |
| 1,2-Dichloroethane | 5.6 | U | 6.0 | U | 6.4 | U | 5.8 | U | 5.8 | U | 5.9 | U | 6.0 | U |
| Benzene | 5.6 | U | 6.0 | U | 6.4 | U | 5.8 | U | 5.8 | U | 5.9 | U | 6.0 | U |
| Trichloroethene | 5.6 | U | 6.0 | U | 6.4 | U | 5.8 | U | 5.8 | U | 5.9 | U | 6.0 | U |
| 1,2-Dichloropropane | 5.6 | U | 6.0 | U | 6.4 | U | 5.8 | U | 5.8 | U | 5.9 | U | 6.0 | U |
| Bromodichloromethane | 5.6 | U | 6.0 | U | 6.4 | U | 5.8 | U | 5.8 | U | 5.9 | U | 6.0 | U |
| Dibromomethane | 5.6 | U | 6.0 | U | 6.4 | U | 5.8 | U | 5.8 | U | 5.9 | U | 6.0 | U |
| 4-Methyl-2-pentanone | 56.0 | U | 60.0 | U | 64.0 | U | 58.0 | U | 58.0 | U | 59.0 | U | 60.0 | U |
| cis-1,3-Dichloropropene | 5.6 | U | 6.0 | U | 6.4 | U | 5.8 | U | 5.8 | U | 5.9 | U | 6.0 | U |
| Toluene | 5.6 | U | 6.0 | U | 6.4 | U | 5.8 | U | 5.8 | U | 5.9 | U | 6.0 | U |
| trans-1,3-Dichloropropene | 5.6 | U | 6.0 | U | 6.4 | U | 5.8 | U | 5.8 | U | 5.9 | U | 6.0 | U |
| 2-Hexanone | 56.0 | U | 60.0 | U | 64.0 | U | 58.0 | U | 58.0 | U | 59.0 | U | 60.0 | U |
| 1,1,2-Trichloroethane | 5.6 | U | 6.0 | U | 6.4 | U | 5.8 | U | 5.8 | U | 5.9 | U | 6.0 | U |
| 1,3-Dichloropropane | 5.6 | U | 6.0 | U | 6.4 | U | 5.8 | U | 5.8 | U | 5.9 | U | 6.0 | U |
| Tetrachloroethene | 5.6 | U | 6.0 | U | 6.4 | U | 5.8 | U | 5.8 | U | 5.9 | U | 6.0 | U |
| Dibromochloromethane | 5.6 | U | 6.0 | U | 6.4 | U | 5.8 | U | 5.8 | U | 5.9 | U | 6.0 | U |
| 1,2-Dibromoethane | 5.6 | U | 6.0 | U | 6.4 | U | 5.8 | U | 5.8 | U | 5.9 | U | 6.0 | U |
| Chlorobenzene | 5.6 | U | 6.0 | U | 6.4 | U | 5.8 | U | 5.8 | U | 5.9 | U | 6.0 | U |
| Ethylbenzene | 5.6 | U | 6.0 | U | 6.4 | U | 5.8 | U | 5.8 | U | 5.9 | U | 6.0 | U |
| 1,1,1,2-Tetrachloroethane | 5.6 | U | 6.0 | U | 6.4 | U | 5.8 | U | 5.8 | U | 5.9 | U | 6.0 | U |
| meta-/para-Xylenes | 5.6 | U | 6.0 | U | 6.4 | U | 5.8 | U | 5.8 | U | 5.9 | U | 6.0 | U |
| ortho-Xylene | 5.6 | U | 6.0 | U | 6.4 | U | 5.8 | U | 5.8 | U | 5.9 | U | 6.0 | U |
| Styrene | 5.6 | U | 6.0 | U | 6.4 | U | 5.8 | U | 5.8 | U | 5.9 | U | 6.0 | U |
| Isopropylbenzene | 5.6 | U | 6.0 | U | 6.4 | U | 5.8 | U | 5.8 | U | 5.9 | U | 6.0 | U |
| Bromoform | 5.6 | U | 6.0 | U | 6.4 | U | 5.8 | U | 5.8 | U | 5.9 | U | 6.0 | U |
| 1,1,2,2-Tetrachloroethane | 5.6 | U | 6.0 | U | 6.4 | U | 5.8 | U | 5.8 | U | 5.9 | U | 6.0 | U |
| 1,2,3-Trichloropropane | 5.6 | U | 6.0 | U | 6.4 | U | 5.8 | U | 5.8 | U | 5.9 | U | 6.0 | U |
| n-Propylbenzene | 5.6 | U | 6.0 | U | 6.4 | U | 5.8 | U | 5.8 | U | 5.9 | U | 6.0 | U |
| Bromobenzene | 5.6 | U | 6.0 | U | 6.4 | U | 5.8 | U | 5.8 | U | 5.9 | U | 6.0 | U |
| 1,3,5-Trimethylbensene | 5.6 | U | 6.0 | U | 6.4 | U | 5.8 | U | 5.8 | U | 5.9 | U | 6.0 | U |
| 2-chlorotoluene | 5.6 | U | 6.0 | U | 6.4 | U | 5.8 | U | 5.8 | U | 5.9 | U | 6.0 | U |
| 4-chlorotoluene | 5.6 | U | 6.0 | U | 6.4 | U | 5.8 | U | 5.8 | U | 5.9 | U | 6.0 | U |
| tert-Butylbenzene | 5.6 | U | 6.0 | U | 6.4 | U | 5.8 | U | 5.8 | U | 5.9 | U | 6.0 | U |
| 1,2,4-Trimethylbenzene | 5.6 | U | 6.0 | U | 6.4 | U | 5.8 | U | 5.8 | U | 5.9 | U | 6.0 | U |
| sec-Butylbenzene | 5.6 | U | 6.0 | U | 6.4 | U | 5.8 | U | 5.8 | U | 5.9 | U | 6.0 | U |
| p-Isopropyltoluene | 5.6 | U | 6.0 | U | 6.4 | U | 5.8 | U | 5.8 | U | 5.9 | U | 6.0 | U |
| 1,3-Dichlorobenzene | 5.6 | U | 6.0 | U | 6.4 | U | 5.8 | U | 5.8 | U | 5.9 | U | 6.0 | U |
| 1,4-Dichlorobenzene | 5.6 | U | 6.0 | U | 6.4 | U | 5.8 | U | 5.8 | U | 5.9 | U | 6.0 | U |
| n-Butylbenzene | 5.6 | U | 6.0 | U | 6.4 | U | 5.8 | U | 5.8 | U | 5.9 | U | 6.0 | U |
| 1,2-Dichlorobenzene | 5.6 | U | 6.0 | U | 6.4 | U | 5.8 | U | 5.8 | U | 5.9 | U | 6.0 | U |
| 1,2-Dibromo-3-chloropropane | 28.0 | U | 30.0 | U | 32.0 | U | 29.0 | U | 29.0 | U | 30.0 | U | 30.0 | U |
| 1,2,4-Trichlorobenzene | 28.0 | U | 30.0 | U | 32.0 | U | 29.0 | U | 29.0 | U | 30.0 | U | 30.0 | U |
| Hexachlorobutadiene | 28.0 | U | 30.0 | U | 32.0 | U | 29.0 | U | 29.0 | U | 30.0 | U | 30.0 | U |
| Naphthalene | 28.0 | U | 30.0 | U | 32.0 | U | 29.0 | U | 29.0 | U | 30.0 | U | 30.0 | U |
| 1,2,3-Trichlorobenzene | 28.0 | U | 30.0 | U | 32.0 | U | 29.0 | U | 29.0 | U | 30.0 | U | 30.0 | U |
| Soil units: ug/kg. | | | | | | | | | | | | | | |
| Water units: ug/L. | | | | | | | | | | | | | | |
| Diesel Range Organics | 11 | U | 12 | U | 13 | U | 12 | U | 12 | U | 12 | U | 12 | U |
| Gasoline Range Organics | 0.1 | U | 0.1 | U | 0.1 | U | 0.1 | U | 0.1 | U | 0.1 | U | 0.1 | U |
| GRO/DRO soil units mg/kg | | | | | | | | | | | | | | |
| GRO/DRO water units: ug/L. | | | | | | | | | | | | | | |

| Sample ID | LAFBHF-10-4.0 | | LAFBHF-MW10 | | LAFBHF-09-4.0 | | LAFBHF-08-4.0 | | LAFBHF-07-4.0 | | LAFBHF-06-4.0 | | LAFBHF-05-4.0 | | LAFBHF-MW05 | | LAFBHF-04-4.0 | |
|---|---|---|---|---|---|---|---|---|---|---|---|---|---|---|---|---|---|---|
| Sample Date | 30-Apr-04 | | 30-Apr-04 | | 04-May-04 | | 04-May-04 | | 04-May-04 | | 04-May-04 | | 04-May-04 | | 05-May-04 | | 05-May-04 | |
| Matrix | Soil | | Water | | Soil | | Soil | | Soil | | Soil | | Soil | | Water | | Soil | |
| | Results | Qual | Results | Qual | Results | Qual | Results | Qual | Results | Qual | Results | Qual | Results | Qual | Results | Qual | Results | Qual |
| Dichlorodifluoromethane | 12.0 | U | 5.0 | U | 11.0 | U | 11.0 | U | 11.0 | U | 12.0 | U | 11.0 | U | 5.0 | U | 12.0 | U |
| Chloromethane | 5.9 | U | 2.0 | U | 5.6 | U | 5.6 | U | 5.7 | U | 5.8 | U | 5.7 | U | 2.0 | U | 5.8 | U |
| Vinyl Chloride | 5.9 | U | 2.0 | U | 5.6 | U | 5.6 | U | 5.7 | U | 5.8 | U | 5.7 | U | 2.0 | U | 5.8 | U |
| Bromomethane | 5.9 | U | 2.0 | U | 5.6 | U | 5.6 | U | 5.7 | U | 5.8 | U | 5.7 | U | 2.0 | U | 5.8 | U |
| Chloroethane | 12.0 | U | 2.0 | U | 11.0 | U | 11.0 | U | 11.0 | U | 12.0 | U | 11.0 | U | 2.0 | U | 12.0 | U |
| Trichlorofluoromethane | 5.9 | U | 5.0 | U | 5.6 | U | 5.6 | U | 5.7 | U | 5.8 | U | 5.7 | U | 5.0 | U | 5.8 | U |
| Acetone | 59.0 | U | 25.0 | U | 56.0 | U | 56.0 | U | 57.0 | U | 58.0 | U | 57.0 | U | 25.0 | U | 22.4 | |
| 1,1 -Dichloroethene | 5.9 | U | 2.0 | U | 5.6 | U | 5.6 | U | 5.7 | U | 5.8 | U | 5.7 | U | 2.0 | U | 5.8 | U |
| Methylene Chloride | 1.3 | J | 2.0 | U | 5.6 | U | 5.6 | U | 5.7 | U | 5.8 | U | 5.7 | U | 2.0 | U | 5.8 | U |
| Carbon Disulfide | 5.9 | U | 2.0 | U | 5.6 | U | 5.6 | U | 5.7 | U | 5.8 | U | 5.7 | U | 2.0 | U | 5.8 | U |
| trans-1,2-Dichloroethene | 5.9 | U | 2.0 | U | 5.6 | U | 5.6 | U | 5.7 | U | 5.8 | U | 5.7 | U | 2.0 | U | 5.8 | U |
| 1,1-Dichloroethane | 5.9 | U | 2.0 | U | 5.6 | U | 5.6 | U | 5.7 | U | 5.8 | U | 5.7 | U | 2.0 | U | 5.8 | U |
| 2-Butanone | 59.0 | U | 25.0 | U | 56.0 | U | 56.0 | U | 57.0 | U | 58.0 | U | 57.0 | U | 25.0 | U | 58.0 | U |
| 2,2-Dichloropropane | 5.9 | U | 10.0 | U | 5.6 | U | 5.6 | U | 5.7 | U | 5.8 | U | 5.7 | U | 10.0 | U | 5.8 | U |
| cis-1,2-Dichloroethene | 5.9 | U | 2.0 | U | 5.6 | U | 5.6 | U | 5.7 | U | 5.8 | U | 5.7 | U | 2.0 | U | 5.8 | U |
| Chloroform | 5.9 | U | 2.0 | U | 5.6 | U | 5.6 | U | 5.7 | U | 5.8 | U | 5.7 | U | 2.0 | U | 5.8 | U |
| Bromochloromethane | 5.9 | U | 5.0 | U | 5.6 | U | 5.6 | U | 5.7 | U | 5.8 | U | 5.7 | U | 5.0 | U | 5.8 | U |
| 1,1,1-Trichloroethane | 5.9 | U | 2.0 | U | 5.6 | U | 5.6 | U | 5.7 | U | 5.8 | U | 5.7 | U | 2.0 | U | 5.8 | U |
| 1,1-Dichloropropene | 5.9 | U | 5.0 | U | 5.6 | U | 5.6 | U | 5.7 | U | 5.8 | U | 5.7 | U | 5.0 | U | 5.8 | U |
| Carbon Tetrachloride | 5.9 | U | 2.0 | U | 5.6 | U | 5.6 | U | 5.7 | U | 5.8 | U | 5.7 | U | 2.0 | U | 5.8 | U |
| 1,2-Dichloroethane | 5.9 | U | 2.0 | U | 5.6 | U | 5.6 | U | 5.7 | U | 5.8 | U | 5.7 | U | 2.0 | U | 5.8 | U |
| Benzene | 5.9 | U | 2.0 | U | 5.6 | U | 5.6 | U | 5.7 | U | 5.8 | U | 5.7 | U | 2.0 | U | 5.8 | U |
| Trichloroethene | 5.9 | U | 2.0 | U | 5.6 | U | 5.6 | U | 5.7 | U | 5.8 | U | 5.7 | U | 2.0 | U | 5.8 | U |
| 1,2-Dichloropropane | 5.9 | U | 2.0 | U | 5.6 | U | 5.6 | U | 5.7 | U | 5.8 | U | 5.7 | U | 2.0 | U | 5.8 | U |
| Bromodichloromethane | 5.9 | U | 2.0 | U | 5.6 | U | 5.6 | U | 5.7 | U | 5.8 | U | 5.7 | U | 2.0 | U | 5.8 | U |
| Dibromomethane | 5.9 | U | 5.0 | U | 5.6 | U | 5.6 | U | 5.7 | U | 5.8 | U | 5.7 | U | 5.0 | U | 5.8 | U |
| 4-Methyl-2-pentanone | 59.0 | U | 25.0 | U | 56.0 | U | 56.0 | U | 57.0 | U | 58.0 | U | 57.0 | U | 25.0 | U | 58.0 | U |
| cis-1,3-Dichloropropene | 5.9 | U | 2.0 | U | 5.6 | U | 5.6 | U | 5.7 | U | 5.8 | U | 5.7 | U | 2.0 | U | 5.8 | U |
| Toluene | 5.9 | U | 2.0 | U | 5.6 | U | 5.6 | U | 5.7 | U | 5.8 | U | 5.7 | U | 2.0 | U | 5.8 | U |
| trans-1,3-Dichloropropene | 5.9 | U | 2.0 | U | 5.6 | U | 5.6 | U | 5.7 | U | 5.8 | U | 5.7 | U | 2.0 | U | 5.8 | U |
| 2-Hexanone | 59.0 | U | 25.0 | U | 56.0 | U | 56.0 | U | 57.0 | U | 58.0 | U | 57.0 | U | 25.0 | U | 58.0 | U |
| 1,1,2-Trichloroethane | 5.9 | U | 2.0 | U | 5.6 | U | 5.6 | U | 5.7 | U | 5.8 | U | 5.7 | U | 2.0 | U | 5.8 | U |
| 1,3-Dichloropropane | 5.9 | U | 5.0 | U | 5.6 | U | 5.6 | U | 5.7 | U | 5.8 | U | 5.7 | U | 5.0 | U | 5.8 | U |
| Tetrachloroethene | 5.9 | U | 2.0 | U | 5.6 | U | 5.6 | U | 5.7 | U | 5.8 | U | 5.7 | U | 2.0 | U | 5.8 | U |
| Dibromochloromethane | 5.9 | U | 2.0 | U | 5.6 | U | 5.6 | U | 5.7 | U | 5.8 | U | 5.7 | U | 2.0 | U | 5.8 | U |
| 1,2-Dibromoethane | 5.9 | U | 5.0 | U | 5.6 | U | 5.6 | U | 5.7 | U | 5.8 | U | 5.7 | U | 5.0 | U | 5.8 | U |
| Chlorobenzene | 5.9 | U | 2.0 | U | 5.6 | U | 5.6 | U | 5.7 | U | 5.8 | U | 5.7 | U | 2.0 | U | 5.8 | U |
| Ethylbenzene | 5.9 | U | 3.8 | | 5.6 | U | 5.6 | U | 5.7 | U | 5.8 | U | 5.7 | U | 2.0 | U | 5.8 | U |
| 1,1,1,2-Tetrachloroethane | 5.9 | U | 5.0 | U | 5.6 | U | 5.6 | U | 5.7 | U | 5.8 | U | 5.7 | U | 5.0 | U | 5.8 | U |
| meta-/para-Xylenes | 5.9 | U | 2.0 | U | 5.6 | U | 5.6 | U | 5.7 | U | 5.8 | U | 5.7 | U | 2.0 | U | 5.8 | U |
| ortho-Xylene | 5.9 | U | 2.0 | U | 5.6 | U | 5.6 | U | 5.7 | U | 5.8 | U | 5.7 | U | 2.0 | U | 5.8 | U |
| Styrene | 5.9 | U | 2.0 | U | 5.6 | U | 5.6 | U | 5.7 | U | 5.8 | U | 5.7 | U | 2.0 | U | 5.8 | U |
| Isopropylbenzene | 5.9 | U | 16.3 | | 5.6 | U | 5.6 | U | 5.7 | U | 5.8 | U | 5.7 | U | 5.0 | U | 5.8 | U |
| Bromoform | 5.9 | U | 2.0 | U | 5.6 | U | 5.6 | U | 5.7 | U | 5.8 | U | 5.7 | U | 2.0 | U | 5.8 | U |
| 1,1,2,2-Tetrachloroethane | 5.9 | U | 2.0 | U | 5.6 | U | 5.6 | U | 5.7 | U | 5.8 | U | 5.7 | U | 2.0 | U | 5.8 | U |
| 1,2,3-Trichloropropane | 5.9 | U | 5.0 | U | 5.6 | U | 5.6 | U | 5.7 | U | 5.8 | U | 5.7 | U | 5.0 | U | 5.8 | U |
| n-Propylbenzene | 5.9 | U | 15.3 | | 5.6 | U | 5.6 | U | 5.7 | U | 5.8 | U | 5.7 | U | 5.0 | U | 5.8 | U |
| Bromobenzene | 5.9 | U | 5.0 | U | 5.6 | U | 5.6 | U | 5.7 | U | 5.8 | U | 5.7 | U | 5.0 | U | 5.8 | U |
| 1,3,5-Trimethylbensene | 5.9 | U | 32.0 | | 5.6 | U | 5.6 | U | 5.7 | U | 5.8 | U | 5.7 | U | 5.0 | U | 5.8 | U |
| 2-chlorotoluene | 5.9 | U | 5.0 | U | 5.6 | U | 5.6 | U | 5.7 | U | 5.8 | U | 5.7 | U | 5.0 | U | 5.8 | U |
| 4-chlorotoluene | 5.9 | U | 5.0 | U | 5.6 | U | 5.6 | U | 5.7 | U | 5.8 | U | 5.7 | U | 5.0 | U | 5.8 | U |
| tert-Butylbenzene | 5.9 | U | 1.6 | J | 5.6 | U | 5.6 | U | 5.7 | U | 5.8 | U | 5.7 | U | 5.0 | U | 5.8 | U |
| 1,2,4-Trimethylbenzene | 5.9 | U | 47.1 | | 5.6 | U | 5.6 | U | 5.7 | U | 5.8 | U | 5.7 | U | 5.0 | U | 5.8 | U |
| sec-Butylbenzene | 5.9 | U | 28.3 | | 5.6 | U | 5.6 | U | 5.7 | U | 5.8 | U | 5.7 | U | 5.0 | U | 5.8 | U |
| p-Isopropyltoluene | 5.9 | U | 9.2 | | 5.6 | U | 5.6 | U | 5.7 | U | 5.8 | U | 5.7 | U | 5.0 | U | 5.8 | U |
| 1,3-Dichlorobenzene | 5.9 | U | 5.0 | U | 5.6 | U | 5.6 | U | 5.7 | U | 5.8 | U | 5.7 | U | 5.0 | U | 5.8 | U |
| 1,4-Dichlorobenzene | 5.9 | U | 5.0 | U | 5.6 | U | 5.6 | U | 5.7 | U | 5.8 | U | 5.7 | U | 5.0 | U | 5.8 | U |
| n-Butylbenzene | 5.9 | U | 19.1 | | 5.6 | U | 5.6 | U | 5.7 | U | 5.8 | U | 5.7 | U | 5.0 | U | 5.8 | U |
| 1,2-Dichlorobenzene | 5.9 | U | 5.0 | U | 5.6 | U | 5.6 | U | 5.7 | U | 5.8 | U | 5.7 | U | 5.0 | U | 5.8 | U |
| 1,2-Dibromo-3-chloropropane | 30.0 | U | 10.0 | U | 28.0 | U | 28.0 | U | 28.0 | U | 29.0 | U | 29.0 | U | 10.0 | U | 29.0 | U |
| 1,2,4-Trichlorobenzene | 30.0 | U | 25.0 | U | 28.0 | U | 28.0 | U | 28.0 | U | 29.0 | U | 29.0 | U | 25.0 | U | 29.0 | U |
| Hexachlorobutadiene | 30.0 | U | 25.0 | U | 28.0 | U | 28.0 | U | 28.0 | U | 29.0 | U | 29.0 | U | 25.0 | U | 29.0 | U |
| Naphthalene | 30.0 | U | 25.0 | U | 28.0 | U | 28.0 | U | 28.0 | U | 29.0 | U | 29.0 | U | 25.0 | U | 29.0 | U |
| 1,2,3-Trichlorobenzene | 30.0 | U | 25.0 | U | 28.0 | U | 28.0 | U | 28.0 | U | 29.0 | U | 29.0 | U | 25.0 | U | 29.0 | U |
| Soil units: ug/kg. | | | | | | | | | | | | | | | | | | |
| Water units: ug/L. | | | | | | | | | | | | | | | | | | |
| Diesel Range Organics | 12 | U | 57000 | D | 11 | U | 11 | U | 11 | U | 12 | U | 12 | U | 200 | U | 12 | U |
| Gasoline Range Organics | 0.1 | U | 430 | | 0.1 | U | 0.1 | U | 0.1 | U | 0.1 | U | 0.1 | U | 100 | U | 0.1 | U |
| GRO/DRO soil units mg/kg | | | | | | | | | | | | | | | | | | |
| GRO/DRO water units: ug/L. | | | | | | | | | | | | | | | | | | |

| Boring # | LAFBHF-01 | LAFBHF-02 | LAFBHF-03 | LAFBHF-04 | LAFBHF-05 | LAFBHF-06 | LAFBHF-07 | LAFBHF-08 | LAFBHF-09 | LAFBHF-10 |
|---|---|---|---|---|---|---|---|---|---|---|
| Depth (feet) | 4 | 4 | 4 | 4 | 4 | 4 | 4 | 4 | 4 | 4 |
| PID Reading (ppm) | 3 | 4 | 3 | 3 | 6 | 8 | 6 | 6 | <1 | 6 |
| Benzene* | ND | ND | ND | ND | ND | ND | ND | ND | ND | ND |
| Toluene | ND | ND | ND | ND | ND | ND | ND | ND | ND | ND |
| Ethylbenzene | ND | ND | ND | ND | ND | ND | ND | ND | ND | ND |
| Xylenes | ND | ND | ND | ND | ND | ND | ND | ND | ND | ND |
| | | | | | | | | | | |
| *BTEX units ug/kg | | | | | | | | | | |
| GRO, mg/kg | 0.56 | ND | ND | ND | ND | ND | ND | ND | ND | ND |
| DRO, mg/kg | ND | ND | ND | ND | ND | ND | ND | ND | ND | ND |

| Boring # | LAFBHF-11 | LAFBHF-12 | LAFBHF-13 | LAFBHF-14 | LAFBHF-15 | LAFBHF-16 | LAFBHF-17 | LAFBHF-18 | LAFBHF-19 | LAFBHF-20 |
|---|---|---|---|---|---|---|---|---|---|---|
| Depth (feet) | 4 | 4 | 4 | 4 | 4 | 4 | 4 | 4 | 4 | 4.5 |
| PID Reading (ppm) | <1 | <1 | <1 | 2 | <1 | 5 | 5 | 5 | 3 | 20 |
| Benzene* | ND | ND | ND | ND | ND | ND | ND | ND | ND | ND |
| Toluene | ND | ND | ND | ND | ND | ND | ND | ND | ND | ND |
| Ethylbenzene | ND | ND | ND | ND | ND | ND | ND | ND | ND | ND |
| Xylenes | ND | ND | ND | ND | ND | ND | ND | ND | ND | ND |
| | | | | | | | | | | |
| *BTEX units ug/kg | | | | | | | | | | |
| GRO, mg/kg | ND | ND | ND | ND | ND | ND | ND | ND | ND | 2.6 |
| DRO, mg/kg | ND | ND | ND | ND | ND | ND | ND | ND | ND | ND |

| Boring # | LAFBHF-21 | LAFBHF-22 | LAFBHF-23 | LAFBHF-24 | LAFBHF-25 | LAFBHF-26 | LAFBHF-27 | LAFBHF-28 | LAFBHF-29 | LAFBHF-30 |
|---|---|---|---|---|---|---|---|---|---|---|
| Depth (feet) | 4.5 | 4.5 | 4.5 | 4.5 | 5 | 5.5 | 4 | 4 | 4 | 4 |
| PID Reading (ppm) | 5 | 4 | N/A | 5 | 14 | N/A | 60 | 5 | 5 | 30 |
| Benzene* | ND | ND | ND | ND | ND | ND | ND | ND | ND | ND |
| Toluene | ND | ND | ND | 4.2 | ND | ND | ND | ND | ND | ND |
| Ethylbenzene | 2.7 | ND | ND | ND | ND | ND | ND | ND | ND | ND |
| Xylenes | 6.4 | ND | ND | 1.2 | ND | ND | ND | ND | ND | ND |
| | | | | | | | | | | |
| *BTEX units ug/kg | | | | | | | | | | |
| GRO, mg/kg | 0.21 | ND | ND | 0.14 | 53 | 22 | ND | ND | ND | 12 |
| DRO, mg/kg | ND | ND | ND | ND | 76 | ND | 160 | ND | ND | 1100 |

| Well # | MW-01 | MW-03 | MW-05 | MW-10 | MW-21 | MW-29 | MW-30 |
|---|---|---|---|---|---|---|---|
| Benzene, ug/L | ND | ND | ND | ND | ND | ND | 1 |
| Toluene, ug/L | ND | ND | ND | ND | ND | ND | ND |
| Ethylbenzene, ug/L | ND | ND | ND | 3.8 | 1.3 | ND | 1.3 |
| Xylenes, ug/L | ND | ND | ND | ND | ND | ND | 0.6 |
| TPH-GRO, ug/L | ND | ND | ND | 430 | 1820 | ND | 1300 |
| TPH-DRO, ug/L | ND | ND | ND | 57000 | 18000 | ND | 17000 |

SECTION TABLE OF CONTENTS

DIVISION 01 - GENERAL REQUIREMENTS

SECTION 01355A

ENVIRONMENTAL PROTECTION

**02/02**

PART 1 GENERAL

1.1 REFERENCES
1.2 DEFINITIONS
1.2.1 Environmental Pollution and Damage
1.2.2 Environmental Protection
1.2.3 Contractor Generated Hazardous Waste
1.2.4 Land Application for Discharge Water
1.2.5 Surface Discharge
1.2.6 Waters of the United States
1.2.7 Wetlands
1.3 GENERAL REQUIREMENTS
1.4 SUBCONTRACTORS
1.5 PAYMENT
1.6 SUBMITTALS
1.7 ENVIRONMENTAL PROTECTION PLAN
1.7.1 Compliance
1.7.2 Contents
1.7.3 Appendix
1.8 PROTECTION FEATURES
1.9 NOT USED
1.10 ENVIRONMENTAL ASSESSMENT OF CONTRACT DEVIATIONS
1.11 NOTIFICATION

PART 2 PRODUCTS (NOT USED)

PART 3 EXECUTION

3.1 ENVIRONMENTAL PERMITS AND COMMITMENTS
3.2 LAND RESOURCES
3.2.1 Work Area Limits
3.2.2 Landscape
3.2.3 Erosion and Sediment Controls
3.2.4 Contractor Facilities and Work Areas
3.3 WATER RESOURCES
3.4 AIR RESOURCES
3.4.1 Particulates
3.4.2 Odors
3.4.3 Sound Intrusions
3.4.4 Burning
3.5 CHEMICAL MATERIALS MANAGEMENT AND WASTE DISPOSAL
3.5.1 Solid Wastes
3.5.2 Chemicals and Chemical Wastes
3.5.3 Contractor Generated Hazardous Wastes/Excess Hazardous Materials
3.5.3.1 General

3.5.4 Fuel and Lubricants
3.5.5 Waste Water
3.6 RECYCLING AND WASTE MINIMIZATION
3.7 NON-HAZARDOUS SOLID WASTE DIVERSION REPORT
3.8 HISTORICAL, ARCHAELOGICAL, AND CULTURAL RESOURCES
3.9 BIOLOGICAL RESOURCES
3.10 PREVIOUSLY USED EQUIPMENT
3.11 MAINTENANCE OF POLLUTION FACILITIES
3.12 MILITARY MUNITIONS
3.13 TRAINING OF CONTRACTOR PERSONNEL
3.14 CONTAMINATED MEDIA MANAGEMENT
3.14.1 Soil and Sediments
3.14.2 Water
3.15 POST CONSTRUCTION CLEANUP

-- End of Section Table of Contents --

SECTION 01355A

ENVIRONMENTAL PROTECTION
**02/02**

PART 1 GENERAL

1.1 REFERENCES

The publications listed below form a part of this specification to the extent referenced. The publications are referred to in the text by basic designation only.

U.S. NATIONAL ARCHIVES AND RECORDS ADMINISTRATION (NARA)

| | |
|---|---|
| 29 CFR 1910.120 | Hazardous Waste Operations and Emergency Response |
| 33 CFR 328 | Definitions |
| 40 CFR 68 | Chemical Accident Prevention Provisions |
| 40 CFR 260 | Hazardous Waste Management System: General |
| 40 CFR 261 | Identification and Listing of Hazardous Waste |
| 40 CFR 262 | Standards Applicable to Generators of Hazardous Waste |
| 40 CFR 279 | Standards for the Management of Used Oil |
| 40 CFR 302 | Designation, Reportable Quantities, and Notification |
| 40 CFR 355 | Emergency Planning and Notification |
| 49 CFR 171 - 178 | Hazardous Materials Regulations |

U.S. ARMY CORPS OF ENGINEERS (USACE)

| | |
|---|---|
| EM 385-1-1 | (1996) U.S. Army Corps on Engineers Safety and Health Requirements Manual |
| WETLAND MANUAL | Corps of Engineers Wetlands Delineation Manual Technical Report Y-87-1 |

VIRGINIA ADMINISTRATIVE CODE (VAC)

| | |
|---|---|
| 9 VAC 25-180 | General Virginia Pollutant Discharge Elimination System (VPDES) Permit for Discharges of Storm Water from Construction Activities |
| 9 VAC 25-120 | General Virginia Pollutant Discharge |

Elimination System (VPDES) Permit for Discharges from Petroleum Contaminated Sites

VIRGINIA DEPARTMENT OF ENVIRONMENTAL QUALITY (VDEQ)

VDEQ Guidance Document 01-2024 Storage Tank Program Technical Manual

## 1.2 DEFINITIONS

### 1.2.1 Environmental Pollution and Damage

Environmental pollution and damage is the presence of chemical, physical, or biological elements or agents which adversely affect human health or welfare; unfavorably alter ecological balances of importance to human life; affect other species of importance to humankind; or degrade the environment aesthetically, culturally and/or historically.

### 1.2.2 Environmental Protection

Environmental protection is the prevention/control of pollution and habitat disruption that may occur to the environment during construction. The control of environmental pollution and damage requires consideration of land, water, and air; biological and cultural resources; and includes management of visual aesthetics; noise; solid, chemical, gaseous, and liquid waste; radiant energy and radioactive material as well as other pollutants.

### 1.2.3 Contractor Generated Hazardous Waste

Contractor generated hazardous waste means materials that, if abandoned or disposed of, may meet the definition of a hazardous waste. These waste streams would typically consist of material brought on site by the Contractor to execute work, but are not fully consumed during the course of construction. Examples include, but are not limited to, excess paint thinners (i.e. methyl ethyl ketone, toluene etc.), waste thinners,excess paints, excess solvents, waste solvents, and excess pesticides, and contaminated pesticide equipment rinse water.

### 1.2.4 Land Application for Discharge Water

The term "Land Application" for discharge water implies that the Contractor shall discharge water at a rate which allows the water to percolate into the soil. No sheeting action, soil erosion, discharge into storm sewers, discharge into defined drainage areas, or discharge into the "waters of the United States" shall occur. Land Application shall be in compliance with all applicable Federal, State, and local laws and regulations.

### 1.2.5 Surface Discharge

The term "Surface Discharge" implies that the water is discharged with possible sheeting action and subsequent soil erosion may occur. Waters that are surface discharged may terminate in drainage ditches, storm sewers,creeks, and/or "waters of the United States" and would require a permit to discharge water from the governing agency.

### 1.2.6 Waters of the United States

All waters which are under the jurisdiction of the Clean Water Act, as

defined in 33 CFR 328.

1.2.7 Wetlands

Wetlands means those areas that are inundated or saturated by surface or ground water at a frequency and duration sufficient to support, and that under normal circumstances do support, a prevalence of vegetation typically adapted for life in saturated soil conditions. Wetlands generally include swamps, marshes, and bogs. Official determination of whether or not an area is classified as a wetland must be done in accordance with the WETLAND MANUAL.

1.3 GENERAL REQUIREMENTS

The Contractor shall minimize environmental pollution and damage that may occur as the result of construction operations. The environmental resources within the project boundaries and those affected outside the limits of permanent work shall be protected during the entire duration of this contract. The Contractor shall comply with all applicable environmental Federal, State, and local laws and regulations. The Contractor shall be responsible for any delays resulting from failure to comply with environmental laws and regulations.

1.4 SUBCONTRACTORS

The Contractor shall ensure compliance with this section by subcontractors.

1.5 PAYMENT

Refer to the Pricing Schedule for work covered under this section. The Contractor shall be responsible for payment of fees associated with environmental permits, application, and/or notices obtained by the Contractor. All costs associated with this section shall be included in accordance with the Pricing Schedule. The Contractor shall be responsible for payment of all fines/fees for violation or non-compliance with Federal, State, Regional and local laws and regulations.

1.6 SUBMITTALS

Government approval is required for submittals with a "G" designation; submittals not having a "G" designation are for information only. When used, a designation following the "G" designation identifies the office that will review the submittal for the Government. The following shall be submitted in accordance with Section 01330 SUBMITTAL PROCEDURES:

SD-01 Preconstruction Submittals

Environmental Protection Plan; G-AE

The environmental protection plan.

1.7 ENVIRONMENTAL PROTECTION PLAN

Prior to commencing construction activities or delivery of materials to the site, the Contractor shall submit an Environmental Protection Plan for review and approval by the Contracting Officer. The purpose of the Environmental Protection Plan is to present a comprehensive overview of known or potential environmental issues which the Contractor must address during construction. Issues of concern shall be defined within the

Environmental Protection Plan as outlined in this section. The Contractor shall address each topic at a level of detail commensurate with the environmental issue and required construction task(s). Topics or issues which are not identified in this section, but which the Contractor considers necessary, shall be identified and discussed after those items formally identified in this section. Prior to submittal of the Environmental Protection Plan, the Contractor shall meet with the Contracting Officer for the purpose of discussing the implementation of the initial Environmental Protection Plan; possible subsequent additions and revisions to the plan including any reporting requirements; and methods for administration of the Contractor's Environmental Plans. The Environmental Protection Plan shall be current and maintained onsite by the Contractor.

1.7.1 Compliance

No requirement in this Section shall be construed as relieving the Contractor of any applicable Federal, State, and local environmental protection laws and regulations. During Construction, the Contractor shall be responsible for identifying, implementing, and submitting for approval any additional requirements to be included in the Environmental Protection Plan.

1.7.2 Contents

The environmental protection plan shall include, but shall not be limited to, the following:

a. Name(s) of person(s) within the Contractor's organization who is(are) responsible for ensuring adherence to the Environmental Protection Plan.

b. Name(s) and qualifications of person(s) responsible for manifesting hazardous waste to be removed from the site, if applicable.

c. Name(s) and qualifications of person(s) responsible for training the Contractor's environmental protection personnel.

d. Description of the Contractor's environmental protection personnel training program.

e. Copies of documents prepared by Contractor to comply with 9 VAC 25-180 and 9 VAC 25-120 and other local, state and federal erosion and sediment control laws.

f. Drawings showing locations of proposed temporary excavations or embankments for haul roads, stream crossings, material storage areas, structures, sanitary facilities, and stockpiles of excess or spoil materials including methods to control runoff and to contain materials on the site.

g. Traffic control plans including measures to reduce erosion of temporary roadbeds by construction traffic, especially during wet weather. Plan shall include measures to minimize the amount of mud transported onto paved public roads by vehicles or runoff.

h. Work area plan showing the proposed activity in each portion of the area and identifying the areas of limited use or nonuse. Plan should include measures for marking the limits of use areas including methods for protection of features to be preserved within authorized work areas.

i. Drawing showing the location of borrow areas, if any.

j. The Spill Control Plan shall include the procedures, instructions, and reports to be used in the event of an unforeseen spill of a substance regulated by 40 CFR 68, 40 CFR 302, 40 CFR 355, and/or regulated under State or Local laws and regulations. The Spill Control Plan supplements the requirements of EM 385-1-1. This plan shall include as a minimum:

1. The name of the individual who will report any spills or hazardous substance releases and who will follow up with complete documentation. This individual shall immediately notify the Contracting Officer and Base Fire Department, Base Response Personnel, Base Environmental Office in addition to the legally required Federal, State, and local reporting channels (including the National Response Center 1-800-424-8802) if a reportable quantity is released to the environment. The plan shall contain a list of the required reporting channels and telephone numbers.

2. The name and qualifications of the individual who will be responsible for implementing and supervising the containment and cleanup.

3. Training requirements for Contractor's personnel and methods of accomplishing the training.

4. A list of materials and equipment to be immediately available at the job site, tailored to cleanup work of the potential hazard(s) identified.

5. The names and locations of suppliers of containment materials and locations of additional fuel oil recovery, cleanup, restoration, and material-placement equipment available in case of an unforeseen spill emergency.

6. The methods and procedures to be used for expeditious contaminant cleanup.

k. A non-hazardous solid waste disposal plan identifying methods and locations for solid waste disposal including clearing debris. The plan shall include schedules for disposal. The Contractor shall identify any subcontractors responsible for the transportation and disposal of solid waste. Licenses or permits shall be submitted for solid waste disposal sites that are not a commercial operating facility. Evidence of the disposal facility's acceptance of the solid waste shall be attached to this plan during the construction. The Contractor shall attach a copy of each of the Non-hazardous Solid Waste Diversion Reports to the disposal plan. The report shall be submitted on the first working day after the first quarter that non-hazardous solid waste has been disposed and/or diverted and shall be for the previous quarter (e.g. the first working day of January, April, July, and October). The report shall indicate the total amount of waste generated and total amount of waste diverted in cubic yards or tons along with the percent that was diverted.

l. A recycling and solid waste minimization plan with a list of measures to reduce consumption of energy and natural resources. The plan shall detail the Contractor's actions to comply with and to

participate in Federal, State, Regional, and local government sponsored recycling programs to reduce the volume of solid waste at the source.

m. An air pollution control plan detailing provisions to assure that dust, debris, materials, trash, etc., do not become air borne and travel off the project site.

n. A contaminant prevention plan that: identifies potentially hazardous substances to be used on the job site; identifies the intended actions to prevent introduction of such materials into the air, water, or ground; and details provisions for compliance with Federal, State, and local laws and regulations for storage and handling of these materials. In accordance with EM 385-1-1, a copy of the Material Safety Data Sheets (MSDS) and the maximum quantity of each hazardous material to be on site at any given time shall be included in the contaminant prevention plan. As new hazardous materials are brought on site or removed from the site, the plan shall be updated.

o. A waste water management plan that identifies the methods and procedures for management and/or discharge of waste waters which are directly derived from construction activities, such as concrete curing water, clean-up water, disinfection water, hydrostatic test water, and water used in flushing of lines.

p. A historical, archaeological, cultural resources biological resources and wetlands plan that identifies procedures to be followed if historical archaeological, cultural resources, biological resources and wetlands not previously known to be onsite or in the area are discovered during construction. The plan shall include methods to assure the protection of known or discovered resources and shall identify lines of communication between Contractor personnel and the Contracting Officer.

q. A contaminated media management plan that identifies the procedures for managing impacted soil and groundwater derived during construction. Plan shall outline procedures to comply with these specifications and the requirements of VDEQ Guidance Document 01-2024 and other applicable local, regional, state and federal regulations.

r. A hazardous waste management plan identifying methods and locations for disposal of hazardous waste such as asbestos and lead paint containing materials that are generated during construction. The Contractor shall identify any subcontractors responsible for the abatement, transportation and disposal of waste materials. Licenses and permits shall be submitted for the disposal sites.

### 1.7.3 Appendix

Copies of all environmental permits, permit application packages, approvals to construct, notifications, certifications, reports, and termination documents shall be attached,as an appendix, to the Environmental Protection Plan.

## 1.8 PROTECTION FEATURES

This paragraph supplements the Contract Clause PROTECTION OF EXISTING VEGETATION, STRUCTURES, EQUIPMENT, UTILITIES, AND IMPROVEMENTS. Prior to start of any onsite construction activities, the Contractor and the

Contracting Officer shall make a joint condition survey. Immediately following the survey, the Contractor shall prepare a brief report including a plan describing the features requiring protection under the provisions of the Contract Clauses, which are not specifically identified on the drawings as environmental features requiring protection along with the condition of trees, shrubs and grassed areas immediately adjacent to the site of work and adjacent to the Contractor's assigned storage area and access route(s), as applicable. This survey report shall be signed by both the Contractor and the Contracting Officer upon mutual agreement as to its accuracy and completeness. The Contractor shall protect those environmental features included in the survey report and any indicated on the drawings, regardless of interference which their preservation may cause to the Contractor's work under the contract.

1.9 NOT USED

1.10 ENVIRONMENTAL ASSESSMENT OF CONTRACT DEVIATIONS

Any deviations, requested by the Contractor, from the drawings,plans and specifications which may have an environmental impact will be subject to approval by the Contracting Officer and may require an extended review, processing, and approval time. The Contracting Officer reserves the right to disapprove alternate methods, even if they are more cost effective, if the Contracting Officer determines that the proposed alternate method will have an adverse environmental impact.

1.11 NOTIFICATION

The Contracting Officer will notify the Contractor in writing of any observed noncompliance with Federal, State or local environmental laws or regulations, permits, and other elements of the Contractor's Environmental Protection plan. The Contractor shall, after receipt of such notice, inform the Contracting Officer of the proposed corrective action and take such action when approved by the Contracting Officer. The Contracting Officer may issue an order stopping all or part of the work until satisfactory corrective action has been taken. No time extensions shall be granted or equitable adjustments allowed to the Contractor for any such suspensions. This is in addition to any other actions the Contracting Officer may take under the contract, or in accordance with the Federal Acquisition Regulation or Federal Law.

PART 2 PRODUCTS (NOT USED)

PART 3 EXECUTION

3.1 ENVIRONMENTAL PERMITS AND COMMITMENTS

The Contractor shall be responsible for obtaining and complying with all environmental permits and commitments required by Federal, State, Regional, and local environmental laws and regulations.

The following shall be the primary points of contact for permitting issues:

TABLE 1
ENVIRONMENTAL PERMITS AND NOTIFICATIONS

| Permit / Plan | Contact | Phone # |
|---|---|---|

TABLE 1
ENVIRONMENTAL PERMITS AND NOTIFICATIONS

| | | |
|---|---|---|
| Dust Control Plan | Robert Jones<br>Langley AFB | 757-764-1126 |
| General VPDES Permit for Discharges of Storm Water from Construction Activities | Jon VanSoestbergen<br>VDEQ | 804-698-4117 |
| Ground Water Withdrawal Permit (if >300,000 gallons withdrawn) | Terry Wagner | 804-698-4043 |
| General VPDES Permit for Discharges from Petroleum Contaminated Sites | Tamara Coffey<br>VDEQ | 757-518-2134 |

## 3.2 LAND RESOURCES

The Contractor shall confine all activities to areas defined by the drawings and specifications. Prior to the beginning of any construction, the Contractor shall identify any land resources to be preserved within the work area. Except in areas indicated on the drawings or specified to be cleared, the Contractor shall not remove, cut, deface, injure, or destroy land resources including trees, shrubs, vines, grasses, topsoil, and land forms without approval. No ropes, cables, or guys shall be fastened to or attached to any trees for anchorage unless specifically authorized. The Contractor shall provide effective protection for land and vegetation resources at all times as defined in the following subparagraphs. Stone, soil, or other materials displaced into uncleared areas shall be removed by the Contractor.

### 3.2.1 Work Area Limits

Prior to commencing construction activities, the Contractor shall mark the areas that need not be disturbed under this contract. Isolated areas within the general work area which are not to be disturbed shall be marked or fenced. Monuments and markers shall be protected before construction operations commence. Where construction operations are to be conducted during darkness, any markers shall be visible in the dark. The Contractor's personnel shall be knowledgeable of the purpose for marking and/or protecting particular objects.

### 3.2.2 Landscape

Trees, shrubs, vines, grasses, land forms and other landscape features indicated and defined on the drawings to be preserved shall be clearly identified by marking, fencing, or wrapping with boards, or any other approved techniques. The Contractor shall restore landscape features damaged or destroyed during construction operations outside the limits of the approved work area.

### 3.2.3 Erosion and Sediment Controls

The Contractor shall be responsible for providing erosion and sediment control measures in accordance with Federal, State, and local laws and regulations. The erosion and sediment controls selected and maintained by the Contractor shall be such that water quality standards are not violated

as a result of the Contractor's construction activities. The area of bare soil exposed at any one time by construction operations should be kept to a minimum. The Contractor shall construct or install temporary and permanent erosion and sediment control best management practices (BMPs) as specified in Section 01356A STORM WATER POLLUTION PREVENTION MEASURES. BMPs may include, but not be limited to, vegetation cover, stream bank stabilization, slope stabilization, silt fences, construction of terraces, interceptor channels, sediment traps, inlet and outfall protection, diversion channels, and sedimentation basins.

### 3.2.4 Contractor Facilities and Work Areas

The Contractor's field offices, staging areas, stockpile storage, and temporary buildings shall be placed in areas designated on the drawings or as directed by the Contracting Officer. Temporary movement or relocation of Contractor facilities shall be made only when approved. Erosion and sediment controls shall be provided for on-site borrow and spoil areas to prevent sediment from entering nearby waters. Temporary excavation and embankments for plant and/or work areas shall be controlled to protect adjacent areas.

## 3.3 WATER RESOURCES

The Contractor shall monitor construction activities to prevent pollution of surface and ground waters. Toxic or hazardous chemicals shall not be applied to soil or vegetation unless otherwise indicated. All water areas affected by construction activities shall be monitored by the Contractor. For construction activities immediately adjacent to impaired surface waters, the Contractor shall be capable of quantifying sediment or pollutant loading to that surface water when required by State or Federally issued Clean Water Act permits.

## 3.4 AIR RESOURCES

Equipment operation, activities, or processes performed by the Contractor shall be in accordance with all Federal and State air emission and performance laws and standards.

### 3.4.1 Particulates

Dust particles; aerosols and gaseous by-products from construction activities; and processing and preparation of materials, such as from asphaltic batch plants; shall be controlled at all times, including weekends, holidays and hours when work is not in progress. The Contractor shall maintain excavations, stockpiles, haul roads, permanent and temporary access roads, plant sites, spoil areas, borrow areas, and other work areas within or outside the project boundaries free from particulates which would cause the Federal, State, and local air pollution standards to be exceeded or which would cause a hazard or a nuisance. Sprinkling, chemical treatment of an approved type, baghouse, scrubbers, electrostatic precipitators or other methods will be permitted to control particulates in the work area. Sprinkling, to be efficient, must be repeated to keep the disturbed area damp at all times. The Contractor must have sufficient, competent equipment available to accomplish these tasks. Particulate control shall be performed as the work proceeds and whenever a particulate nuisance or hazard occurs. The Contractor shall comply with all State and local visibility regulations.

3.4.2 Odors

Odors from construction activities shall be controlled at all times. The odors shall not cause a health hazard and shall be in compliance with State regulations and/or local ordinances.

3.4.3 Sound Intrusions

The Contractor shall keep construction activities under surveillance and control to minimize environment damage by noise. The Contractor shall comply with the provisions of the State of Virginia rules.

3.4.4 Burning

Burning shall be prohibited on the Government premises.

3.5 CHEMICAL MATERIALS MANAGEMENT AND WASTE DISPOSAL

Disposal of wastes shall be as directed below, unless otherwise specified in other sections and/or shown on the drawings.

3.5.1 Solid Wastes

Solid wastes (excluding clearing debris) shall be placed in containers which are emptied on a regular schedule. Handling, storage, and disposal shall be conducted to prevent contamination. Segregation measures shall be employed so that no hazardous or toxic waste will become co-mingled with solid waste. The Contractor shall verify that the selected transporters and disposal facilities have the necessary permits and licenses to operate.

3.5.2 Chemicals and Chemical Wastes

Chemicals shall be dispensed ensuring no spillage to the ground or water. Periodic inspections of dispensing areas to identify leakage and initiate corrective action shall be performed and documented. This documentation will be periodically reviewed by the Government. Chemical waste shall be collected in corrosion resistant, compatible containers. Collection drums shall be monitored and removed to a staging or storage area when contents are within 6 inches of the top. Wastes shall be classified, managed, stored, and disposed of in accordance with Federal, State, and local laws and regulations.

3.5.3 Contractor Generated Hazardous Wastes/Excess Hazardous Materials

3.5.3.1 General

Hazardous wastes are defined in 40 CFR 261, or are as defined by applicable State and local regulations. Hazardous materials are defined in 49 CFR 171 - 178. The Contractor shall, at a minimum, manage and store hazardous waste in compliance with 40 CFR 262 and shall manage and store hazardous waste in accordance with the Base hazardous waste management plan. The Contractor shall take sufficient measures to prevent spillage of hazardous and toxic materials during dispensing. The Contractor shall segregate hazardous waste from other materials and wastes, shall protect it from the weather by placing it in a safe covered location, and shall take precautionary measures such as berming or other appropriate measures against accidental spillage. The Contractor shall be responsible for storage, describing, packaging, labeling, marking, and placarding of hazardous waste and hazardous material in accordance with 49 CFR 171 - 178,

State, and local laws and regulations. The Contractor shall transport Contractor generated hazardous waste off Government property within 90 days in accordance with the Environmental Protection Agency and the Department of Transportation laws and regulations. The Contractor shall dispose of hazardous waste in compliance with Federal, State and local laws and regulations. Spills of hazardous or toxic materials shall be immediately reported to the Contracting Officer and the Base Environmental Office. Cleanup and cleanup costs due to spills shall be the Contractor's responsibility. The Contractor shall coordinate the disposition of hazardous waste with the Base Hazardous Waste Manager and the Contracting Officer.

### 3.5.4 Fuel and Lubricants

Storage, fueling and lubrication of equipment and motor vehicles shall be conducted in a manner that affords the maximum protection against spill and evaporation. Fuel, lubricants and oil shall be managed and stored in accordance with all Federal, State, Regional, and local laws and regulations. Used lubricants and used oil to be discarded shall be stored in marked corrosion-resistant containers and recycled or disposed in accordance with 40 CFR 279, State, and local laws and regulations.

### 3.5.5 Waste Water

Disposal of waste water shall be as specified below.

a. Waste water from construction activities, such as onsite material processing, concrete curing, foundation and concrete clean-up, water used in concrete trucks, forms, etc. shall not be allowed to enter water ways or to be discharged prior to being treated to remove pollutants. The Contractor shall dispose of the construction related waste water off-Government property in accordance with all Federal, State, Regional and Local laws and regulations.

b. Water generated from the flushing of lines after disinfection or hydrostatic testing shall be discharged to the storm drain. Discharge of this water shall be in accordance with the provisions of the VPDES Permit and the Stormwater Pollution Prevention Plan.

c. Groundwater removed from excavations shall be temporarilly stored in covered storage receptacles. Water shall be sampled and disposed by the Contractor in accordance with the provisions of the VPDES Permit or requirements of VDEQ Guidance Document 01-2024.

## 3.6 RECYCLING AND WASTE MINIMIZATION

The Contractor shall participate in State and local government sponsored recycling programs. The Contractor is further encouraged to minimize solid waste generation throughout the duration of the project.

## 3.7 NON-HAZARDOUS SOLID WASTE DIVERSION REPORT

The Contractor shall maintain an inventory of non-hazardous solid waste diversion and disposal of construction and demolition debris. The Contractor shall submit a report to the Contracting Officer on the first working day after each fiscal year quarter, starting the first quarter that non-hazardous solid waste has been generated. The following shall be included in the report:

a. Construction and Demolition (C&D) Debris Disposed = _____ in cubic yards or tons, as appropriate.

b. Construction and Demolition (C&D) Debris Recycled = _____ in cubic yards or tons, as appropriate.

c. Total C&D Debris Generated = _____ in cubic yards or tons, as appropriate.

d. Waste Sent to Waste-To-Energy Incineration Plant (This amount should not be included in the recycled amount) = _____ in cubic yards or tons, as appropriate.

## 3.8 HISTORICAL, ARCHAELOGICAL, AND CULTURAL RESOURCES

If during excavation or other construction activities any previously unidentified or unanticipated historical, archaeological, and cultural resources are discovered or found, all activities that may damage or alter such resources shall be temporarily suspended. Resources covered by this paragraph include but are not limited to: any human skeletal remains or burials; artifacts; shell, midden, bone, charcoal, or other deposits; rock or coral alignments, pavings, wall, or other constructed features; and any indication of agricultural or other human activities. Upon such discovery or find, the Contractor shall immediately notify the Contracting Officer so that the appropriate authorities may be notified and a determination made as to their significance and what, if any, special disposition of the finds should be made. The Contractor shall cease all activities that may result in impact to or the destruction of these resources. The Contractor shall secure the area and prevent employees or other persons from trespassing on, removing, or otherwise disturbing such resources.

## 3.9 BIOLOGICAL RESOURCES

The Contractor shall minimize interference with, disturbance to, and damage to fish, wildlife, and plants including their habitat. The Contractor shall be responsible for the protection of threatened and endangered animal and plant species including their habitat in accordance with Federal, State, Regional, and local laws and regulations.

## 3.10 PREVIOUSLY USED EQUIPMENT

The Contractor shall clean all previously used construction equipment prior to bringing it onto the project site. The Contractor shall ensure that the equipment is free from soil residuals, egg deposits from plant pests, noxious weeds, and plant seeds. The Contractor shall consult with the USDA jurisdictional office for additional cleaning requirements.

## 3.11 MAINTENANCE OF POLLUTION FACILITIES

The Contractor shall maintain permanent and temporary pollution control facilities and devices for the duration of the contract or for that length of time construction activities create the particular pollutant.

## 3.12 MILITARY MUNITIONS

In the event the Contractor discovers or uncovers military munitions as defined in 40 CFR 260, the Contractor shall immediately stop work in that area and immediately inform the Contracting Officer.

## 3.13 TRAINING OF CONTRACTOR PERSONNEL

The Contractor's personnel shall be trained in all phases of environmental protection and pollution control. Contractor personnel working at the excavation site shall be trained to work with hazardous materials in accordance with 29 CFR 1910.120 and other state and local requirements. The Contractor shall conduct environmental protection/pollution control meetings for all Contractor personnel prior to commencing construction activities. Additional meetings shall be conducted for new personnel and when site conditions change. The training and meeting agenda shall include: methods of detecting and avoiding pollution; familiarization with statutory and contractual pollution standards; installation and care of devices, vegetative covers, and instruments required for monitoring purposes to ensure adequate and continuous environmental protection/pollution control; anticipated hazardous or toxic chemicals or wastes, and other regulated contaminants; recognition and protection of archaeological sites, artifacts, wetlands, and endangered species and their habitat that are known to be in the area.

## 3.14 CONTAMINATED MEDIA MANAGEMENT

Contaminated environmental media consisting of, but not limited to, storm water, ground water, soils, and sediments shall be managed by the Contractor.

### 3.14.1 Soil and Sediments

a. Excavated soil that is otherwise acceptable for backfill purposes and is not satured with petroleum shall be stockpiled on a 20 mil geomembrane for reuse at the construction site. Sampling of this material is not required prior to reuse. Excavated materials shall be covered with a geomembrane that is a minimum 10 mils thick and shall only be reused at the original excavation site. In the event it is impractical to store soil adjacent to the excavation, Contractor may relocate the material to a temporary onsite stockpile area. Contractor shall be responsible for loading and hauling of soil and managment of the stockpile area. Additionally, Contractor shall provide an approved mechanism for tracking stockpiled soil such that it is returned and reused within 100 feet of the original excavation site.

b. Contractor shall collect one composite sample per 100 cubic yards of excess soil not reused at the excavation. Samples shall be tested for total petroleum hydrocarbons (TPH) and benzene, toluene, ethylbenzene and xylenes(BTEX). Testing and ultimate disposal shall be performed in accordance with the requirements of VDEQ Guidance Document 01-2024. Soil exhibiting TPH concentrations less than 50 mg/kg and BTEX concentrations less than 10 mg/kg will be considered clean fill and shall be transported offsite for disposal. Petroleum contaminated soil is considered soil exhibiting TPH and BTEX concentrations in excess of these limits. Contaminated soil shall be transported offsite for disposal at a permitted waste management facility that has been preapproved by the Base. Additional testing required by the disposal facility shall be at Contractor's sole expense.

c. Soil saturated with petroleum shall be transported by the Contractor to the stockpile area for sampling. Saturated soil

materials shall be placed on an impermeable membrane that is a minimum 20 mils thick and covered with a membrane that is a minimum of 10 mils thick. Contractor shall provide adequate means of holding membrane covers in place and perform periodic inspections to verify the integrity of the cover throughout the construction activities. Stockpiles shall be limited to 100-cubic-yards for sampling purposes.

d. Contractor shall collect samples from saturated soil piles as required by the Base approved disposal facility. Contact Mr. Dave Wiker at 757-764-1129 to coordinate disposal activities.

Saturated soil shall be loaded, hauled and disposed at Contractor's expense.

3.14.2 Water

a. The Contractor shall berm open excavations to divert away surface water, provide stormwater pollution prevention measures indicated in Section 01356A and comply with the provisions of the VPDES Permit for Discharges of Water from Construction Activities. All surface water entering the excavation will be considered contaminated unless sample results indicate otherwise.

b. Contractor shall pump water encountered in the excavation to temporary storage receptacles. The Contractor shall supply, maintain and clean water storage receptacles at the site. Contractor shall sample and dispose of potentially contaminated water in accordance with the requirements provided in VDEQ Guidance Document 01-2024. Water discharges shall be coordinated with Tammy Coffee of VDEQ (757-518-2134) and Matt Goss of Langley AFB (757-764-1130).

3.15 POST CONSTRUCTION CLEANUP

The Contractor shall clean up all areas used for construction in accordance with Contract Clause: "Cleaning Up". The Contractor shall, unless otherwise instructed in writing by the Contracting Officer, obliterate all signs of temporary construction facilities such as haul roads, work area, structures, foundations of temporary structures, stockpiles of excess or waste materials, and other vestiges of construction prior to final acceptance of the work. The disturbed area shall be graded, filled and the entire area seeded unless otherwise indicated.

-- End of Section --

SECTION TABLE OF CONTENTS

DIVISION 01 - GENERAL REQUIREMENTS

SECTION 01356A

STORM WATER POLLUTION PREVENTION MEASURES

**08/96**

PART 1 GENERAL

1.1 REFERENCES
1.2 GENERAL
1.3 SUBMITTALS
1.4 EROSION AND SEDIMENT CONTROLS
1.4.1 Stabilization Practices
1.4.2 Structural Practices
1.4.2.1 Silt Fences

PART 2 PRODUCTS

2.1 COMPONENTS FOR SILT FENCES
2.1.1 Filter Fabric
2.1.2 Silt Fence Stakes and Posts
2.1.3 Mill Certificate or Affidavit
2.1.4 Identification Storage and Handling

PART 3 EXECUTION

3.1 INSTALLATION OF SILT FENCES
3.2 MAINTENANCE
3.2.1 Silt Fence Maintenance
3.3 INSPECTIONS
3.3.1 General
3.3.2 Inspections Details
3.3.3 Inspection Reports

-- End of Section Table of Contents --

SECTION 01356A

STORM WATER POLLUTION PREVENTION MEASURES
08/96

PART 1 GENERAL

1.1 REFERENCES

The publications listed below form a part of this specification to the extent referenced. The publications are referred to in the text by basic designation only.

ASTM INTERNATIONAL (ASTM)

| | |
|---|---|
| ASTM D 4439 | (1997) Standard Terminology for Geosynthetics |
| ASTM D 4491 | (1996) Water Permeability of Geotextiles by Permittivity |
| ASTM D 4533 | (1991; R 1996) Trapezoid Tearing Strength of Geotextiles |
| ASTM D 4632 | (1991; R 1996)) Grab Breaking Load and Elongation of Geotextiles |
| ASTM D 4751 | (1995) Determining Apparent Opening Size of a Geotextile |
| ASTM D 4873 | (1995) Identification, Storage, and Handling of Geosynthetic Rolls |

1.2 GENERAL

The Contractor shall implement the storm water pollution prevention measures specified in this section in a manner which will meet the requirements of Section 01355A ENVIRONMENTAL PROTECTION, and the requirements of 9 VAC 25-180. The Contractor shall prepare, submit, obtain and implement all necessary plans and permits to comply with local, state and federal requirements. The Contractor shall install and maintain stabilization and structural best management practices which will minimize erosion and sediment pollution from the construction site. The Contractor shall be responsible for selection of appropriate best management practices as specified herein.

1.3 SUBMITTALS

Government approval is required for submittals with a "G" designation; submittals not having a "G" designation are for information only. When used, a designation following the "G" designation identifies the office that will review the submittal for the Government. The following shall be submitted in accordance with Section 01330 SUBMITTAL PROCEDURES:

SD-07 Certificates

Mill Certificate or Affidavit;

## 1.4 EROSION AND SEDIMENT CONTROLS

The controls and measures required by the Contractor are described below.

### 1.4.1 Stabilization Practices

The stabilization practices to be implemented shall include temporary seeding, mulching,vegetative buffer strips,protection of trees, preservation of mature vegetation,etc. On his daily CQC Report, the Contractor shall record the dates when the major grading activities occur, (e.g., clearing excavation,and grading); when construction activities temporarily or permanently cease on a portion of the site; and when stabilization practices are initiated.

### 1.4.2 Structural Practices

Structural practices shall be implemented to divert flows from exposed soils, temporarily store flows, or otherwise limit runoff and the discharge of pollutants from exposed areas of the site. Structural practices shall be implemented in a timely manner during the construction process to minimize erosion and sediment runoff. Structural practices shall include the following devices.

#### 1.4.2.1 Silt Fences

The Contractor shall provide silt fences as a temporary structural practice to minimize erosion and sediment runoff. Silt fences shall be properly installed to effectively retain sediment immediately after completing each phase of work where erosion would occur in the form of sheet and rill erosion (e.g. clearing and grubbing, excavation, embankment, and grading). Final removal of silt fence barriers shall be upon approval by the Contracting Officer.

# PART 2 PRODUCTS

## 2.1 COMPONENTS FOR SILT FENCES

### 2.1.1 Filter Fabric

The geotextile shall comply with the requirements of ASTM D 4439, and shall consist of polymeric filaments which are formed into a stable network such that filaments retain their relative positions. The filament shall consist of a long-chain synthetic polymer composed of at least 85 percent by weight of ester, propylene, or amide, and shall contain stabilizers and/or inhibitors added to the base plastic to make the filaments resistance to deterioration due to ultraviolet and heat exposure. Synthetic filter fabric shall contain ultraviolet ray inhibitors and stabilizers to provide a minimum of six months of expected usable construction life at a temperature range of 0 to 120 degrees F. The filter fabric shall meet the following requirements:

FILTER FABRIC FOR SILT SCREEN FENCE

| PHYSICAL PROPERTY | TEST PROCEDURE | STRENGTH REQUIREMENT |
|---|---|---|
| Grab Tensile | ASTM D 4632 | 100 lbs. min. |
| Elongation (%) | | 30 % max. |
| Trapezoid Tear | ASTM D 4533 | 55 lbs. min. |
| Permittivity | ASTM D 4491 | 0.2 sec-1 |
| AOS (U.S. Std Sieve) | ASTM D 4751 | 20-100 |

2.1.2 Silt Fence Stakes and Posts

The Contractor may use either wooden stakes or steel posts for fence construction. Wooden stakes utilized for silt fence construction, shall have a minimum cross section of 2 inches by 2 inches when oak is used and 4 inches by 4 inches when pine is used, and shall have a minimum length of 5 feet. Steel posts (standard "U" or "T" section) utilized for silt fence construction, shall have a minimum weight of 1.33 pounds per linear foot and a minimum length of 5 feet.

2.1.3 Mill Certificate or Affidavit

A mill certificate or affidavit shall be provided attesting that the fabric and factory seams meet chemical, physical, and manufacturing requirements specified above. The mill certificate or affidavit shall specify the actual Minimum Average Roll Values and shall identify the fabric supplied by roll identification numbers. The Contractor shall submit a mill certificate or affidavit signed by a legally authorized official from the company manufacturing the filter fabric.

2.1.4 Identification Storage and Handling

Filter fabric shall be identified, stored and handled in accordance with ASTM D 4873.

PART 3 EXECUTION

3.1 INSTALLATION OF SILT FENCES

Silt fences shall extend a minimum of 16 inches above the ground surface and shall not exceed 34 inches above the ground surface. Filter fabric shall be from a continuous roll cut to the length of the barrier to avoid the use of joints. When joints are unavoidable, filter fabric shall be spliced together at a support post, with a minimum 6 inch overlap, and securely sealed. A trench shall be excavated approximately 4 inches wide and 4 inches deep on the upslope side of the location of the silt fence. The 4-inch by 4-inch trench shall be backfilled and the soil compacted over the filter fabric. Silt fences shall be removed upon approval by the Contracting Officer.

3.2 MAINTENANCE

The Contractor shall maintain the temporary and permanent vegetation, erosion and sediment control measures, and other protective measures in good and effective operating condition by performing routine inspections to determine condition and effectiveness, by restoration of destroyed

vegetative cover, and by repair of erosion and sediment control measures and other protective measures. The following procedures shall be followed to maintain the protective measures.

### 3.2.1 Silt Fence Maintenance

Silt fences shall be inspected in accordance with paragraph INSPECTIONS. Any required repairs shall be made promptly. Close attention shall be paid to the repair of damaged silt fence resulting from end runs and undercutting. Should the fabric on a silt fence decompose or become ineffective, and the barrier is still necessary, the fabric shall be replaced promptly. Sediment deposits shall be removed when deposits reach one-third of the height of the barrier. When a silt fence is no longer required, it shall be removed. The immediate area occupied by the fence and any sediment deposits shall be shaped to an acceptable grade.

## 3.3 INSPECTIONS

### 3.3.1 General

The Contractor shall inspect disturbed areas of the construction site, areas used for storage of materials that are exposed to precipitation that have not been finally stabilized, stabilization practices, structural practices, other controls, and area where vehicles exit the site at least once every seven (7) calendar days and within 24 hours of the end of any storm that produces 0.5 inches or more rainfall at the site. Where sites have been finally stabilized, such inspection shall be conducted at least once every month.

### 3.3.2 Inspections Details

Disturbed areas and areas used for material storage that are exposed to precipitation shall be inspected for evidence of, or the potential for, pollutants entering the drainage system. Erosion and sediment control measures identified in the Storm Water Pollution Prevention Plan shall be observed to ensure that they are operating correctly. Discharge locations or points shall be inspected to ascertain whether erosion control measures are effective in preventing significant impacts to receiving waters. Locations where vehicles exit the site shall be inspected for evidence of offsite sediment tracking.

### 3.3.3 Inspection Reports

For each inspection conducted, the Contractor shall prepare a report summarizing the scope of the inspection, name(s) and qualifications of personnel making the inspection, the date(s) of the inspection, major observations relating to the implementation of the Storm Water Pollution Prevention Plan and Erosion and Sediment Control Plan, maintenance performed, and actions taken. The report shall be furnished to the Contracting Officer within 24 hours of the inspection as a part of the Contractor's daily CQC REPORT. A copy of the inspection report shall be maintained on the job site.

-- End of Section --

SECTION TABLE OF CONTENTS

DIVISION 01 - GENERAL REQUIREMENTS

SECTION 01420

SOURCES FOR REFERENCE PUBLICATIONS

**03/03**

PART 1 GENERAL

0.1 REFERENCES
1.2 ORDERING INFORMATION

-- End of Section Table of Contents --

SECTION 01420

SOURCES FOR REFERENCE PUBLICATIONS
**03/03**

PART 1 GENERAL

0.1 REFERENCES

Various publications are referenced in other sections of the specifications to establish requirements for the work. These references are identified in each section by document number, date and title. The document number used in the citation is the number assigned by the standards producing organization, (e.g. ASTM B 564 Nickel Alloy Forgings). However, when the standards producing organization has not assigned a number to a document, an identifying number has been assigned for reference purposes.

1.2 ORDERING INFORMATION

The addresses of the standards publishing organizations whose documents are referenced in other sections of these specifications are listed below, and if the source of the publications is different from the address of the sponsoring organization, that information is also provided. Documents listed in the specifications with numbers which were not assigned by the standards producing organization should be ordered from the source by title rather than by number.

ACI INTERNATIONAL (ACI)
P.O. Box 9094
Farmington Hills, MI 48333-9094
Ph: 248-848-3700
Fax: 248-848-3701
Internet: http://www.aci-int.org

AIR CONDITIONING AND REFRIGERATION INSTITUTE (ARI)
4100 North Fairfax Dr., Suite 200
ATTN: Pubs Dept.
Arlington, VA 22203
Ph: 703-524-8800
Fax: 703-528-3816
E-mail: ari@ari.org
Internet: http://www.ari.org

ALUMINUM ASSOCIATION (AA)
900 19th Street N.W., Ste 300
Washington, DC 20006
Ph: 202-862-5100
Fax: 202-862-5164
Internet: http://www.aluminum.org

AMERICAN ASSOCIATION OF STATE HIGHWAY AND TRANSPORTATION OFFICIALS (AASHTO)
444 N. Capital St., NW, Suite 249

Washington, DC 20001
Ph: 202-624-5800
Fax: 202-624-5806
Internet: http://www.aashto.org

AMERICAN BEARING MANUFACTURERS ASSOCIATION (ABMA)
2025 M Street, NW, Suite 800
Washington, DC 20036
Ph: 202-367-1155
Fax: 202-367-2155
Internet: http://www.abma-dc.org

AMERICAN CONFERENCE OF GOVERNMENTAL INDUSTRIAL HYGIENISTS (ACGIH)
1330 Kemper Meadow Dr.

Cincinnati, OH 45240
Ph: 513-742-2020
Fax: 513-742-3355
Internet: http://www.acgih.org
E-mail: mail@acgih.org

AMERICAN FOREST & PAPER ASSOCIATION (AF&PA)
American Wood Council
ATTN: Publications Dept.
1111 Nineteenth St. NW, Suite 800
Washington, DC 20036
Ph: 800-878-8878 or 202-463-2700
Fax: 202-463-2785
Internet: http://www.afandpa.org/

AMERICAN GEAR MANUFACTURERS ASSOCIATION (AGMA)
1500 King St., Suite 201
Alexandria, VA 22314-2730
Ph: 703-684-0211
Fax: 703-684-0242
Internet: http://www.agma.org

AMERICAN INSTITUTE OF STEEL CONSTRUCTION (AISC)
One East Wacker Dr., Suite 3100
Chicago, IL 60601-2001
Ph: 312-670-2400
Publications: 800-644-2400
Fax: 312-670-5403
Internet: http://www.aisc.org

AMERICAN INSTITUTE OF TIMBER CONSTRUCTION (AITC)
7012 So. Revere Parkway, Suite 140
Englewood, CO 80112
Ph: 303-792-9559
Fax: 303-792-0669
Internet: http://www.aitc-glulam.org

AMERICAN IRON AND STEEL INSTITUTE (AISI)
1140 Connecticut Avenue, NW, Suite 705
Washington, DC 20036
Ph: 202-452-7100
FX: 202-463-6573
Internet: http://www.steel.org

AMERICAN NATIONAL STANDARDS INSTITUTE (ANSI)
1819 L Street, NW, 6th Floor
Washington, DC 20036
Ph: 202-293-8020
Fax: 202-293-9287
Internet: http://www.ansi.org/

Note --- Documents beginning with the letter "S" can be ordered from:

Acoustical Society of America
2 Huntington Quadrangle, Suite 1NO1
Melville, NY 11747-4502
Ph: 516-576-2360
Fax: 516-576-2377
Internet: http://asa.aip.org
General e-mail: asa@aip.org

AMERICAN PETROLEUM INSTITUTE (API)
1220 L St., NW
Washington, DC 20005-4070
Ph: 202-682-8000
Fax: 202-682-8223
Internet: http://www.api.org

AMERICAN SOCIETY OF CIVIL ENGINEERS (ASCE)
1801 Alexander Bell Drive
Reston, VA 20191-4400
Ph: 703-295-6300 - 800-548-2723
Fax: 703-295-6222
Internet: http://www.asce.org
e-mail: marketing@asce.org

AMERICAN SOCIETY OF HEATING, REFRIGERATING AND AIR-CONDITIONING ENGINEERS (ASHRAE)
1791 Tullie Circle, NE
Atlanta, GA 30329
Ph: 800-527-4723 or 404-636-8400
Fax: 404-321-5478
Internet: http://www.ashrae.org

AMERICAN SOCIETY OF SANITARY ENGINEERING (ASSE)
901 Canterbury, Suite A
Westlake, OH 44145
Ph: 440-835-3040
Fax: 440-835-3488
E-mail: info@asse-plumbing.org
Internet: http://www.asse-plumbing.org

AMERICAN WATER WORKS ASSOCIATION(AWWA)
6666 West Quincy Avenue
Denver, CO 80235
Ph: 303-794-7711
Fax: 303-794-3951
Internet: http://www.awwa.org

AMERICAN WELDING SOCIETY (AWS)
550 N.W. LeJeune Road
Miami, FL 33126
Ph: 800-443-9353 - 305-443-9353
Fax: 305-443-7559
Internet: http://www.aws.org

AMERICAN WOOD-PRESERVERS' ASSOCIATION (AWPA)
P.O. Box 5690
Grandbury, TX 76049-0690
Ph: 817-326-6300
Fax: 817-326-6306
Internet: http://www.awpa.com

APA - THE ENGINEERED WOOD ASSOCIATION (APA)
P.O.Box 11700
Tacoma, WA 98411-0700
Ph: 253-565-6600
Fax: 253-565-7265
Internet: http://www.apawood.org

ARCHITECTURAL WOODWORK INSTITUTE (AWI)
1952 Isaac Newton Square West
Reston, VA 20190
Ph: 703-733-0600
Fax: 703-733-0584
Internet: http://www.awinet.org

ASME INTERNATIONAL (ASME)
Three Park Avenue
New York, NY 10016-5990
Ph: 212-591-7722
Fax: 212-591-7674
Internet: http://www.asme.org

ASPHALT INSTITUTE (AI)
Research Park Dr.
P.O. Box 14052
Lexington, KY 40512-4052
Ph: 859-288-4960
Fax: 859-288-4999
Internet: http://www.asphaltinstitute.org

ASSOCIATED AIR BALANCE COUNCIL (AABC)
1518 K St., NW
Washington, DC 20005
Ph: 202-737-0202
Fax: 202-638-4833
Internet: http://www.aabchq.com
E-mail: aabchq@aol.com

ASSOCIATION OF EDISON ILLUMINATING COMPANIES (AEIC)
600 No. 18th St.
P.O. Box 2641
Birmingham, AL 35291
Ph: 205-257-2530
Fax: 205-257-2540
Internet: http://www.aeic.org

ASTM INTERNATIONAL (ASTM)

100 Barr Harbor Drive, PO Box C700
West Conshohocken, PA 19428-2959
Ph: 610-832-9500
Fax: 610-832-9555
Internet: http://www.astm.org

BUILDERS HARDWARE MANUFACTURERS ASSOCIATION (BHMA)
355 Lexington Ave.
17th floor
New York, NY 10017
Ph: 212-297-2122
Fax: 212-370-9047
Internet: http://www.buildershardware.com

CAST IRON SOIL PIPE INSTITUTE (CISPI)
5959 Shallowford Rd., Suite 419
Chattanooga, TN 37421
Ph: 423-892-0137
Fax: 423-892-0817
Internet: http://www.cispi.org

COMPRESSED GAS ASSOCIATION (CGA)
4221 Walney Road, 5th Floor
Chantilly, VA 20151-2923
Ph: 703-788-2700
Fax: 703-961-1831
Internet: http://www.cganet.com
e-mail: cga@cganet.com

CONCRETE REINFORCING STEEL INSTITUTE (CRSI)
933 N. Plum Grove Rd.
Schaumburg, IL 60173-4758
Ph: 847-517-1200
Fax: 847-517-1206
Internet: http://www.crsi.org/

COPPER DEVELOPMENT ASSOCIATION (CDA)
260 Madison Ave.
New York, NY 10016
Ph: 212-251-7200
Fax: 212-251-7234
Internet: http://www.copper.org
E-mail: staff@cda.copper.org

CRANE MANUFACTURERS ASSOCIATION OF AMERICA (CMAA)
8720 Red Oak Blvd., Ste, 201
Charlotte, NC 28217
Ph: 704-676-1190 or 800-722-6832
Fx: 704-676-1199
Internet: http://www.mhia.org/psc/psc products cranes.cfm

DOOR AND HARDWARE INSTITUTE (DHI)
14150 Newbrook Dr.Suite 200
Chantilly, VA 20151-2223
Ph: 703-222-2010
Fax: 703-222-2410
Internet: http://www.dhi.org
e-mail: info@dhi.org

ELECTRICAL GENERATING SYSTEMS ASSOCIATION (EGSA)
1650 South Dixie Highway, Ste. 500
Boca Raton, FL 33432-7462
Ph: 561-750-5575
Fax: 561-395-8557
Internet: http://www.egsa.org

ELECTRONIC INDUSTRIES ALLIANCE (EIA)
2500 Wilson Blvd.
Arlington, VA 22201-3834
Ph: 703-907-7500
Fax: 703-907-7501
Internet: http://www.eia.org

FM GLOBAL (FM)
1301 Atwood Avenue
P.O. Box 7500
Johnston, RI 02919
Ph: 401-275-3000
Fax: 401-275-3029
Internet: http://www.fmglobal.com

FOUNDATION FOR CROSS-CONNECTION CONTROL AND HYDRAULIC RESEARCH (FCCCHR)
University of South California
Kaprielian Hall 200
Los Angeles, CA 90089-2531
Ph: 213-740-2032

Fax: 213-740-8399
Internet: http://www.usc.edu/dept/fccchr

GLASS ASSOCIATION OF NORTH AMERICA (GANA)
2945 SW Wanamaker Drive, Suite A
Topeka, KS 66614
Ph: 785-271-0208
Fax: 785-271-0166
Internet: http://www.glasswebsite.com/GANA

GYPSUM ASSOCIATION (GA)
810 First St. NE, Suite 510
Washington, DC 20002
Ph: 202-289-5440
Fax: 202-289-3707
Internet: http://www.gypsum.org

HYDRAULIC INSTITUTE (HI)
9 Sylvan Way
Parsippany, NJ 07054-3802
Ph: 973-267-9700
Fax: 973-267-9055
Internet: http://www.pumps.org

ILLUMINATING ENGINEERING SOCIETY OF NORTH AMERICA (IESNA)
120 Wall St., 17th Floor
New York, NY 10005
Ph: 212-248-5000
Fax: 212-248-5017
Internet: http://www.iesna.org

INSTITUTE OF ELECTRICAL AND ELECTRONICS ENGINEERS (IEEE)
445 Hoes Ln
Piscataway, NJ 08855-1331
Ph: 732-981-0060
Fax: 732-981-1712
Internet: http://www.ieee.org
E-mail: customer.services@ieee.org

INTERNATIONAL CODE COUNCIL (ICC)
5203 Leesburg Pike, Suite 600
Falls Church, VA 22041
Ph: 703-931-4533
Fax: 703-379-1546
Internet: http://www.intlcode.org

MANUFACTURERS STANDARDIZATION SOCIETY OF THE VALVE AND FITTINGS INDUSTRY (MSS)
127 Park St., NE
Vienna, VA 22180-4602
Ph: 703-281-6613
Fax: 703-281-6671

Internet: http://www.mss-hq.com
e-mail: info@mss-hq.com

MASTER PAINTERS INSTITUTE (MPI)
4090 Graveley Street
Burnaby, BC CANADA V5C 3T6
PH: 888-674-8937
Fx: 888-211-8708
Internet: http://www.paintinfo.com/mpi

METAL BUILDING MANUFACTURERS ASSOCIATION (MBMA)
1300 Sumner Ave.
Cleveland, OH 44115-2851
Ph: 216-241-7333
Fax: 216-241-0105
Internet: http://www.mbma.com
e-mail: mbma@mbma.com

MIDWEST INSULATION CONTRACTORS ASSOCIATION (MICA)
2017 So. 139th Cir.
Omaha, NE 68144-2149
Ph: 800-747-6422
Fax: 402-330-9702
Internet: http://www.micainsulation.org
e-mail: info@micainsulation.org

NACE INTERNATIONAL (NACE)
1440 South Creek Drive
Houston, TX 77084-4906
Ph: 281-228-6200
Fax: 281-228-6300
Internet: http://www.nace.org

NATIONAL ASSOCIATION OF ARCHITECTURAL METAL MANUFACTURERS (NAAMM)
8 S. Michigan Ave, Suite 1000
Chicago, IL 60603
Ph: 312-322-0405
Fax: 312-332-0706
Internet: http://www.naamm.org
e-mail: naamm@gss.net

NATIONAL ELECTRICAL MANUFACTURERS ASSOCIATION (NEMA)
1300 N. 17th St., Suite 1847
Rosslyn, VA 22209
Ph: 703-841-3200
Fax: 703-841-3300
Internet: http://www.nema.org/
E-mail: jas_peak@nema.org

NATIONAL ENVIRONMENTAL BALANCING BUREAU (NEBB)
8575 Grovemont Circle
Gaithersburg, MD 20877-4121

Ph: 301-977-3698
Fax: 301-977-9589
Internet: http://www.nebb.org

NATIONAL FIRE PROTECTION ASSOCIATION (NFPA)
1 Batterymarch Park
P.O. Box 9101
Quincy, MA 02269-9101
Ph: 617-770-3000
Fax: 617-770-0700
Internet: http://www.nfpa.org

NATIONAL INSTITUTE FOR OCCUPATIONAL SAFETY AND HEALTH (NIOSH)
Mail Stop C-13
4676 Columbia Parkway
Cincinnati, OH 45226-1998
Ph: 800-356-4674
Fx: 513-533-8573
Internet: http://www.cdc.gov/niosh/homepage.html
To order pubs for which a fee is charged, order from:
Superintendent of Documents
U.S. Government Printing Office
732 North Capitol Street, NW
Mailstop: SDE
Washington, DC 20401
Ph: 866-512-2800 or 202-512-1800
Fax: 202-512-2250
Internet: http://www.gpo.gov

NATIONAL READY-MIXED CONCRETE ASSOCIATION (NRMCA)
900 Spring St.
Silver Spring, MD 20910
Ph: 301-587-1400
Fax: 301-585-4219
Internet: http://www.nrmca.org

NSF INTERNATIONAL (NSF)
ATTN: Publications
789 North Dixboro Rd.
P.O. Box 130140
Ann Arbor, MI 48113-0140
Ph: 734-769-8010
Fax: 734-769-0109
Toll Free: 800-NSF-MARK
Internet: http://www.nsf.org

PLUMBING AND DRAINAGE INSTITUTE (PDI)
45 Bristol Dr.
South Easton, MA 02375
Ph: 508-230-3516 or 800-589-8956
Fax: 508-230-3529
Internet: http://www.pdionline.org
E-Mail: info@pdionline.org

PRECAST/PRESTRESSED CONCRETE INSTITUTE (PCI)
209 West Jackson Blvd.
Chicago, IL 60606-6938
Ph: 312-786-0300
Fax: 312-786-0353
Internet: http://www.pci.org
e-mail: info@pci.org

SCIENTIFIC CERTIFICATION SYSTEMS (SCS)
1939 Harrison Street, Suite 400
Oakland, CA 94612
Ph: 510-832-1415
FAX: 510-832-0359
Internet: http://www.scs1.com

SHEET METAL & AIR CONDITIONING CONTRACTORS' NATIONAL ASSOCIATION (SMACNA)
4201 Lafayette Center Dr.,
Chantilly, VA 20151-1209
Ph: 703-803-2980
Fax: 703-803-3732
Internet: http://www.smacna.org
e-mail: info@smacna.org

SOCIETY OF AUTOMOTIVE ENGINEERS INTERNATIONAL (SAE)
400 Commonwealth Dr.
Warrendale, PA 15096-0001
Ph: 724-776-4841
Fax: 724-776-5760
Internet: http://www.sae.org
e-mail: custsvc@sae.org

STEEL DECK INSTITUTE (SDI)
P.O. Box 25
Fox River Grove, IL 60021-0025
Ph: 847-462-1930
Fax: 847-462-1940
Internet: http://www.sdi.org
e-mail: Steve@sdi.org

STEEL JOIST INSTITUTE (SJI)
3127 Tenth Ave., North Ext.
Myrtle Beach, SC 29577-6760
Ph: 843-626-1995
Fax: 843-626-5565
Internet: http://www.steeljoist.org

STEEL TANK INSTITUTE (STI)
570 Oakwood Rd.
Lake Zurich, IL 60047
Ph: 847-438-8265
Fax: 847-438-8766

Internet: http://www.steeltank.com

STEEL WINDOW INSTITUTE (SWI)
1300 Sumner Ave.
Cleveland, OH 44115-2851
Ph: 216-241-7333
Fax: 216-241-0105
Internet: http://www.steelwindows.com

THE SOCIETY FOR PROTECTIVE COATINGS (SSPC)
40 24th Street, 6th Floor
Pittsburgh, PA 15222-4656
Ph: 412-281-2331
Fax: 412-281-9992
Internet: http://www.sspc.org

UNDERWRITERS LABORATORIES (UL)
333 Pfingsten Rd.
Northbrook, IL 60062-2096
Ph: 847-272-8800
Fax: 847-272-8129
Internet: http://www.ul.com/
e-mail: northbrook@us.ul.com

UNI-BELL PVC PIPE ASSOCIATION (UBPPA)
2655 Villa Creek Dr., Suite 155
Dallas, TX 75234
Ph: 214-243-3902
Fax: 214-243-3907
Internet: http://www.uni-bell.org
e-mail: info@uni-bell.org

U.S. ARMY CORPS OF ENGINEERS (USACE)
Order CRD-C DOCUMENTS from:
U.S. Army Engineer Waterways Experiment Station
ATTN: Technical Report Distribution Section, Services
Branch, TIC
3909 Halls Ferry Rd.
Vicksburg, MS 39180-6199
Ph: 601-634-2664
Fax: 601-634-2388
Internet: http://www.wes.army.mil/SL/MTC/handbook/handbook.htm

Order Other Documents from:
USACE Publications Depot
Attn: CEIM-SP-D
2803 52nd Avenue
Hyattsville, MD 20781-1102
Ph: 301-394-0081
Fax: 301-394-0084
Internet: http://www.usace.army.mil/publications
or http://www.hnd.usace.army.mil/techinfo/index.htm

U.S. DEPARTMENT OF AGRICULTURE (USDA)

Order AMS Publications from:
AGRICULTURAL MARKETING SERVICE (AMS)
Seed Regulatory and Testing Branch
USDA, AMS, LS Div.
Room 209, Bldg. 306, BARC-East
Beltsville, MD 20705-2325
Ph: 301-504-9430
Fax: 301-504-8098
Internet: http://www.ams.usda.gov/lsg/seed.htm
e-mail: jeri.irwin@usda.gov

Order Other Publications from:
U.S. Department of Agriculture
14th and Independence Ave., SW, Room 4028-S
Washington, DC 20250
Ph: 202-720-2791
Fax: 202-720-2166
Internet: http://www.usda.gov

U.S. DEPARTMENT OF COMMERCE (DOC)

1401 Constitution Avenue, NW
Washington, DC 20230
Internet: http://www.commerce.gov/

Order Publications From:
National Technical Information Service
5285 Port Royal Road
Springfield, VA 22161
Ph: 703-605-6000
Fax: 703-605-6900
Internet: http://www.ntis.gov

U.S. DEPARTMENT OF DEFENSE (DOD)

Order DOD Documents from:
National Technical Information Service
5285 Port Royal Road
Springfield, VA 22161
Ph: 703-605-6000
FAX: 703-605-6900
Internet: http://www.ntis.gov

Order Military Specifications, Standards and Related Publications from:
Department of Defense Single Stock Point for (DODSSP)
Defense Automation and Production Service (DAPS)
Bldg 4D
700 Robbins AV
Philadelphia, PA 19111-5094
Ph: 215-697-2179
Fax: 215-697-1462
Internet: http://www.dodssp.daps.mil

U.S. DEPARTMENT OF HOUSING AND URBAN DEVELOPMENT (HUD)

Order from:
HUD User
P.O. Box 6091

Rockville, MD 20849
Ph: 800-245-2691
Fax: 301-519-5767
Internet: http://www.huduser.org
e-mail: Huduser@aspensys.com

U.S. ENVIRONMENTAL PROTECTION AGENCY (EPA)
Ariel Rios Building
1200 Pennsylvania Avenue, N.W.
Washington, DC 20460
Ph: 202-260-2090
FAX: 202-260-6257
Internet: http://www.epa.gov

NOTE --- Some documents are available only from:
National Technical Information Services (NTIS)
5285 Port Royal Rd.
Springfield, VA 22161
Ph: 703-605-6000
Fax: 703-605-6900
Internet: http://www.ntis.gov

U.S. FEDERAL EMERGENCY MANAGEMENT AGENCY (FEMA)
500 C Street, SW
Washington, D.C. 20472
Phone: 202-566-1600
Internet: http://www.fema.gov

U.S. GENERAL SERVICES ADMINISTRATION (GSA)
General Services Administration
1800 F Street, NW
Washington, DC 20405
PH: 202-501-0705

Order from:
General Services Administration
Federal Supply Service Bureau
1941 Jefferson Davis Highway
Arlington, VA 22202
PH: 703-605-5400
Internet: http://www.fss.gsa.gov/pub/fed-specs.cfm

U.S. NATIONAL ARCHIVES AND RECORDS ADMINISTRATION (NARA)
700 Pennsylvania Avenue, N.W.
Washington, D.C. 20408
Phone: 866-325-7208
Internet: http://www.archives.gov

Order documents from:
Superintendent of Documents
U.S.Government Printing Office
732 North Capitol Street, NW
Washington, DC 20401
Mailstop: SDE
Ph: 866-512-1800 or 202-512-1800

Fax: 202-512-2250
Internet: http://www.gpo.gov
E-mail: gpoaccess@gpo.gov

WINDOW AND DOOR MANUFACTURERS ASSOCIATION (WDMA)
1400 East Touhy Ave., Suite 470
Des Plaines, IL 60018
Ph: 847-299-5200 or 800-223-2301
Fax: 708-299-1286
Internet: http://www.wdma.com
e-mail: admin@wdma.com

-- End of Section --

SECTION TABLE OF CONTENTS

DIVISION 01 - GENERAL REQUIREMENTS

SECTION 01450A

CHEMICAL DATA QUALITY CONTROL

**10/97**

PART 1 GENERAL

1.1 REFERENCES
1.2 ACRONYMS
1.3 MEASUREMENT AND PAYMENT
1.4 CHEMISTRY REQUIREMENTS
1.4.1 Not Used
1.4.2 Data Quality Objectives (DQO)
1.4.3 Sampling, Analysis and Measurement
1.4.3.1 Soil/Sediment and Ground/Surface Water Samples
1.4.3.2 Manifesting Samples
1.5 QUALITY ASSURANCE ELEMENTS
1.5.1 Laboratory Validation Requirements
1.5.2 Review of Primary Laboratory Data
1.6 SUBMITTALS
1.7 QUALIFICATIONS
1.7.1 Chemical Quality Control Officer
1.7.2 Environmental Sampler

PART 2 PRODUCTS (NOT APPLICABLE)

PART 3 EXECUTION

3.1 GENERAL REQUIREMENTS
3.2 SAMPLING AND ANALYSIS PLAN
3.2.1 Field Sampling Plan
3.2.2 Quality Assurance project Plan
3.3 CONTROL OF CHEMICAL DATA QUALITY
3.4 ANALYTICAL TESTING LABORATORIES
3.4.1 Laboratory Analytical Requirements
3.4.2 Laboratory Performance
3.5 DOCUMENTATION
3.6 NOTIFICATION OF NON-COMPLIANCE

-- End of Section Table of Contents --

SECTION 01450A

CHEMICAL DATA QUALITY CONTROL
**10/97**

PART 1 GENERAL

1.1 REFERENCES

The publications listed below form a part of this specification to the extent referenced. The publications are referred to in the text by basic designation only.

U.S. NATIONAL ARCHIVES AND RECORDS ADMINISTRATION (NARA)

| | |
|---|---|
| 40 CFR 261 | Identification and Listing of Hazardous Waste |
| 40 CFR 262 | Standards Applicable to Generators of Hazardous Waste |
| 40 CFR 268 | Land Disposal Restrictions |
| 49 CFR 172 | Hazardous Materials Table, Special Provisions, Hazardous Materials Communications, Emergency Response Information, and Training Requirements |
| 49 CFR 178 | Specifications for Packagings |

U.S. ARMY CORPS OF ENGINEERS (USACE)

| | |
|---|---|
| EM 200-1-6 | (1997) Chemical Quality Assurance |
| ER 1110-1-263 | (1996) Data Quality Management for Hazardous, Toxic, Radioactive Waste Remedial Activities |

VIRGINIA ADMINISTRATIVE CODE (VAC)

| | |
|---|---|
| 9 VAC 25-180 | General Virginia Pollutant Discharge Elimination System (VPDES) Permit for Discharge of Storm Water from Construction Activities |

VIRGINIA DEPARTMENT OF ENVIRONMENTAL QUALITY (VDEQ)

| | |
|---|---|
| VDEQ Guidance Document 01-2024 | Storage Tank Program Technical Manual |

1.2 ACRONYMS

The definition of acronyms used by the Contractor that pertain to chemical data quality control shall be clearly defined for all contract related products and communications.

## 1.3 MEASUREMENT AND PAYMENT

Separate payment will not be made for providing and maintaining the chemical data quality requirements including the chemical data quality management, chemical data validation, minimum chemical data reporting requirements, and chemical data quality submittal requirements; these costs shall be included in the applicable unit prices or lump sum prices contained in the bidding schedule.

## 1.4 CHEMISTRY REQUIREMENTS

Chemical Data Quality Control (CDQC) shall be as defined in ER 1110-1-263; this ER, which integrates USACE guidance on the subject, shall be supplemented by EM 200-1-6 for detail technical guidance on CDQC. Tables and charts defining Design Analysis (DA), ROD, and remedial technology specific chemistry shall be according to or consistent with EM 200-1-3.

### 1.4.1 Not Used

### 1.4.2 Data Quality Objectives (DQO)

Sample acquisition, chemical analysis and chemical parameter measurements shall be performed so that the resulting data meet and support data use requirements. The chemical data shall be acquired, documented, verified and reported to ensure that the specified precision, accuracy, representativeness, comparability, completeness and sensitivity requirements are achieved.

### 1.4.3 Sampling, Analysis and Measurement

#### 1.4.3.1 Soil/Sediment and Ground/Surface Water Samples

Soil/sediment samples shall be collected and analyzed in accordance with the requirements of the approved disposal facility.

A minimum of one groundwater sample shall be obtained from each storage receptacle for sampling purposes. Sampling shall be in accordance with the requirements of VDEQ Guidance Document 01-2024. Water from hydrostatic testing shall be handled in accordance with 9 VAC 25-180

#### 1.4.3.2 Manifesting Samples

Material shipping manifesting shall be in accordance with 40 CFR 261, 40 CFR 262, 40 CFR 268, 49 CFR 172, and 49 CFR 178. Coordinate soil manifesting with Dave Wiker of Langley AFB (757-764-1129) and water manifesting with Matt Goss of Langley AFB (757-764-1130).

## 1.5 QUALITY ASSURANCE ELEMENTS

The Contractor shall be responsible for the following QA elements necessary to monitor and ensure the quality of chemical data produced.

### 1.5.1 Laboratory Validation Requirements

The laboratory shall be certified by the State of Virginia or by the US Army Corps of Engineers.1.5.2 Review of Primary Laboratory Data

The Contractor shall be responsible for the independent data review of the entire primary data set.

## 1.6 SUBMITTALS

Government approval is required for submittals with a "G" designation; submittals not having a "G" designation are for information only. When used, a designation following the "G" designation identifies the office that will review the submittal for the Government. The following shall be submitted in accordance with Section 01330 SUBMITTAL PROCEDURES:

SD-03 Product Data

Sampling and Analysis Plan; G-AE.

The SAP including the Field Sampling Plan (FSP) and the Quality Assurance Project Plan (QAPP), no later than 30 days after receipt of notice to proceed.

## 1.7 QUALIFICATIONS

### 1.7.1 Chemical Quality Control Officer

As a minimum, the Contractor's Chemical Quality Control Officer shall have: a degree in Chemistry; 1 year of experience related to investigations, studies, design and remedial actions at HTRW sites; and 1 field season (or one continuous calendar year experience) in calibration and operation of various field monitoring devices as well as standard analytical chemistry methods common for analyzing soil, water, air and other materials for chemical contamination assessment, including hazardous waste manifesting. The Chemical Quality Control Officer shall ensure that all chemistry related objectives including responsibilities for DQO definitions, sampling and analysis, project requirements for data documentation and validation, and final project reports are attained. The Chemical Quality Control officer need not be present onsite during routine sampling, but shall be available for consultation with Government and Contractor personnel.

### 1.7.2 Environmental Sampler

As a minimum, the Contractor's Environmental Sampler shall have: a degree in Chemistry, Environmental Science, Engineering, Geology, Hydrology, or a related field; 1 year of experience in the development and preparation of SAP and work plans; 1 year of experience in and knowledge of EPA methods for collecting environmental and hazardous waste samples; 1 year of experience in operation of field screening equipment (e.g. PID, FID, infrared spectrometer, immunoassay, etc.); and 1 field season of experience with the particular field screening techniques for use on this project. The Environmental Sampler shall collect all onsite samples and perform all field screening tests. The Environmental Sampler shall review the sampling results, and provide recommendations for the Contractor's sampling program. The Environmental Sampler shall be onsite during excavation and stockpiling operations involving contaminated soil or soil to be checked for contamination.PART 2 PRODUCTS (NOT APPLICABLE)

# PART 3 EXECUTION

## 3.1 GENERAL REQUIREMENTS

The Contractor shall be responsible for chemical sample acquisition, sample analysis, instrumental measurements of chemical parameters and for chemical

data quality control. An effective chemical data quality control system shall be established that meets the requirements for the chemical measurement DQO applicable to the project. The system shall cover chemical measurements pertaining to and required for Contractor and subcontractor produced chemical data. The Contractor shall control field screening, sampling, and testing in conjunction with remedial activities to meet all DQO; minimize the amount of excavated material requiring temporary storage; prevent dilution of contaminated soils with clean soils; and ensure completion of work within the required time.

## 3.2 SAMPLING AND ANALYSIS PLAN

The SAP shall be prepared in accordance with CDQC requirements and EM 200-1-3. The SAP shall be a single document that contains two distinct elements: FSP and QAPP. The SAP shall confirm the Contractor's understanding of the contract requirements for chemical data quality control, and shall describe procedures for field sampling and sample submittal for analysis, field chemical parameter measurement, data documentation, data assessment and data reporting requirements. The SAP shall delineate the methods the Contractor intends to use to accomplish the chemical quality control items to assure accurate, precise, representative, complete, legally defensible and comparable data. The SAP shall describe all chemical parameter measurements for all matrices for all phases of the remediation contract. As a single interrelated document, the SAP shall be provided to field and laboratory personnel. The Contractor may propose original/innovative approaches to chemical parameter measurements for cost reduction and remediation efficiency by abbreviated sampling, contingency sampling and/or contingency analysis, indicator or tracer analysis, onsite analytical services, equivalency or screening methods. The SAP shall clearly identify the Contractor obtained laboratories. The Contractor shall furnish copies of the Government approved SAP to all laboratories and the Contractor's field sampling crew. The SAP shall address all levels of the investigation with enough detail to become a document which may be used as an audit guide for field and laboratory work.

### 3.2.1 Field Sampling Plan

The FSP shall contain necessary technical detail and direction for the field personnel to understand sampling and field measurement requirements. The FSP shall provide a comprehensive description and full detail for personnel to perform all onsite activities required to attain project DQO, including: locations of samples, sampling procedures for onsite and offsite chemical analysis, summaries of analyses to be performed on samples, shipment of samples for offsite analyses, performance of onsite and offsite instrumental parameter measurements, data documentation and reporting requirements.

### 3.2.2 Quality Assurance project Plan

The QAPP shall contain necessary technical detail and direction for field and laboratory personnel to understand project sample analysis, quality control and data reporting requirements, analytical methods, required detection limits, QC requirements, and data validation and reporting requirements.

## 3.3 CONTROL OF CHEMICAL DATA QUALITY

Contractor chemical data quality control shall ensure that a quality control program is in place that assures sampling and analytical activities

and the resulting chemical parameter measurement data comply with the DQO and the requirements of the SAP. The Contractor shall utilize the three-phase control system that includes a preparatory, initial and follow-up phase for each definable feature of work. The Contractor's three-phase chemical data control process shall ensure that data reporting requirements are achieved and shall be implemented according to Section 01451 CONTRACTOR QUALITY CONTROL. The three-phase chemical data control process shall be combined with that under Section 01451 CONTRACTOR QUALITY CONTROL.

## 3.4 ANALYTICAL TESTING LABORATORIES

The Contractor shall propose the analytical laboratories to be used for the primary samples analyses. Laboratory validation requirements shall be in accordance with paragraph Laboratory Validation Requirements. The Contractor may utilize its own laboratory or utilize subcontract laboratories to achieve the primary required sample analyses.

### 3.4.1 Laboratory Analytical Requirements

The Contractor shall provide the specified chemical analyses by the Contractor's laboratory. The Contractor shall provide chemical analyses to achieve the project DQO for all parameters specified by the methods. To give the USACE programs the greatest flexibility in the execution of its projects, the EPA 530/F-93/004 methods are generally the methods employed for the analytical testing of environmental samples. These methods are flexible and shall be adapted to individual project-specific requirements.

### 3.4.2 Laboratory Performance

The Contractor shall provide continued acceptable analytical performance and shall establish a procedure to address data deficiencies noted by review and/or quality assurance sample results. The Contractor shall provide and implement a mechanism for providing analytical labs with the SAP or QAPP portion of the SAP, for monitoring the lab's performance and for performing corrective action procedures.

## 3.5 DOCUMENTATION

Documentation records shall be provided as factual evidence that required chemical data has been produced and chemical data quality has been achieved.

## 3.6 NOTIFICATION OF NON-COMPLIANCE

The Contracting Officer will notify the Contractor of any detected noncompliance with the foregoing requirements. The Contractor shall take immediate corrective action after receipt of such notice.

-- End of Section --

SECTION TABLE OF CONTENTS

DIVISION 01 - GENERAL REQUIREMENTS

SECTION 01451

CONTRACTOR QUALITY CONTROL

**03/04**

PART 1 GENERAL

1.1 REFERENCES
1.2 SUBMITTALS
1.3 PAYMENT

PART 2 PRODUCTS (Not Applicable)

PART 3 EXECUTION

3.1 GENERAL REQUIREMENTS
3.2 QUALITY CONTROL PLAN
3.2.1 Content of the CQC Plan
3.2.2 Acceptance of Plan
3.2.3 Notification of Changes
3.3 COORDINATION MEETING
3.4 QUALITY CONTROL ORGANIZATION
3.4.1 Personnel Requirements
3.4.2 CQC System Manager
3.4.3 CQC Personnel
3.4.4 Additional Requirement
3.4.5 Organizational Changes
3.5 SUBMITTALS AND DELIVERABLES
3.6 CONTROL
3.6.1 Preparatory Phase
3.6.2 Initial Phase
3.6.3 Follow-up Phase
3.6.4 Additional Preparatory and Initial Phases
3.7 TESTS
3.7.1 Testing Procedure
3.7.2 Testing Laboratories
3.7.2.1 Capability Check
3.7.2.2 Capability Recheck
3.7.3 Onsite Laboratory
3.7.4 Furnishing or Transportation of Samples for Testing
3.8 COMPLETION INSPECTION
3.8.1 Punch-Out Inspection
3.8.2 Pre-Final Inspection
3.8.3 Final Acceptance Inspection
3.9 DOCUMENTATION
3.10 SAMPLE FORMS
3.11 NOTIFICATION OF NONCOMPLIANCE

-- End of Section Table of Contents --

SECTION 01451

CONTRACTOR QUALITY CONTROL
**03/04**

PART 1 GENERAL

1.1 REFERENCES

The publications listed below form a part of this specification to the extent referenced. The publications are referred to within the text by basic designation only.

ASTM INTERNATIONAL (ASTM)

| | |
|---|---|
| ASTM D 3740 | (2001) Minimum Requirements for Agencies Engaged in the Testing and/or Inspection of Soil and Rock as Used in Engineering Design and Construction |
| ASTM E 329 | (2002) Agencies Engaged in the Testing and/or Inspection of Materials Used in Construction |

1.2 SUBMITTALS

Government approval is required for submittals with a "G" designation; submittals not having a "G" designation are for information only. When used, a designation following the "G" designation identifies the office that will review the submittal for the Government. The following shall be submitted in accordance with Section 01330 SUBMITTAL PROCEDURES:

SD-01 Preconstruction Submittals

Quality Control Plan; G

1.3 PAYMENT

Separate payment will not be made for providing and maintaining an effective Quality Control program, and all costs associated therewith shall be included in the applicable unit prices or lump-sum prices contained in the Bidding Schedule.

PART 2 PRODUCTS (Not Applicable)

PART 3 EXECUTION

3.1 GENERAL REQUIREMENTS

The Contractor is responsible for quality control and shall establish and maintain an effective quality control system in compliance with the Contract Clause titled "Inspection of Construction." The quality control system shall consist of plans, procedures, and organization necessary to produce an end product which complies with the contract requirements. The system shall cover all construction operations, both onsite and offsite, and shall be keyed to the proposed construction sequence. The site project

superintendent will be held responsible for the quality of work on the job and is subject to removal by the Contracting Officer for non-compliance with the quality requirements specified in the contract. The site project superintendent in this context shall be the highest level manager responsible for the overall construction activities at the site, including quality and production. The site project superintendent shall maintain a physical presence at the site at all times, except as otherwise acceptable to the Contracting Officer, and shall be responsible for all construction and construction related activities at the site.

## 3.2 QUALITY CONTROL PLAN

The Contractor shall furnish for review by the Government, not later than 10 days after receipt of notice to proceed, the Contractor Quality Control (CQC) Plan proposed to implement the requirements of the Contract Clause titled "Inspection of Construction." The plan shall identify personnel, procedures, control, instructions, tests, records, and forms to be used. The Government will consider an interim plan for the first 60 days of operation. Construction will be permitted to begin only after acceptance of the CQC Plan or acceptance of an interim plan applicable to the particular feature of work to be started. Work outside of the features of work included in an accepted interim plan will not be permitted to begin until acceptance of a CQC Plan or another interim plan containing the additional features of work to be started.

### 3.2.1 Content of the CQC Plan

The CQC Plan shall include, as a minimum, the following to cover all construction operations, both onsite and offsite, including work by subcontractors, fabricators, suppliers, and purchasing agents:

a. A description of the quality control organization, including a chart showing lines of authority and acknowledgment that the CQC staff shall implement the three phase control system for all aspects of the work specified. The staff shall include a CQC System Manager who shall report to the project superintendent.

b. The name, qualifications (in resume format), duties, responsibilities, and authorities of each person assigned a CQC function.

c. A copy of the letter to the CQC System Manager signed by an authorized official of the firm which describes the responsibilities and delegates sufficient authorities to adequately perform the functions of the CQC System Manager, including authority to stop work which is not in compliance with the contract. The CQC System Manager shall issue letters of direction to all other various quality control representatives outlining duties, authorities, and responsibilities. Copies of these letters shall also be furnished to the Government.

d. Procedures for scheduling, reviewing, certifying, and managing submittals, including those of subcontractors, offsite fabricators, suppliers, and purchasing agents. These procedures shall be in accordance with Section 01330 SUBMITTAL PROCEDURES.

e. Control, verification, and acceptance testing procedures for each specific test to include the test name, specification paragraph requiring test, feature of work to be tested, test frequency, and

person responsible for each test. (Laboratory facilities approved by the Contracting Officer shall be used.)

f. Procedures for tracking preparatory, initial, and follow-up control phases and control, verification, and acceptance tests including documentation.

g. Procedures for tracking construction deficiencies from identification through acceptable corrective action. These procedures shall establish verification that identified deficiencies have been corrected.

h. Reporting procedures, including proposed reporting formats.

i. A list of the definable features of work. A definable feature of work is a task which is separate and distinct from other tasks, has separate control requirements, and may be identified by different trades or disciplines, or it may be work by the same trade in a different environment. Although each section of the specifications may generally be considered as a definable feature of work, there are frequently more than one definable features under a particular section. This list will be agreed upon during the coordination meeting.

3.2.2 Acceptance of Plan

Acceptance of the Contractor's plan is required prior to the start of construction. Acceptance is conditional and will be predicated on satisfactory performance during the construction. The Government reserves the right to require the Contractor to make changes in his CQC Plan and operations including removal of personnel, as necessary, to obtain the quality specified.

3.2.3 Notification of Changes

After acceptance of the CQC Plan, the Contractor shall notify the Contracting Officer in writing of any proposed change. Proposed changes are subject to acceptance by the Contracting Officer.

3.3 COORDINATION MEETING

After the Preconstruction Conference, before start of construction, and prior to acceptance by the Government of the CQC Plan, the Contractor shall meet with the Contracting Officer or Authorized Representative and discuss the Contractor's quality control system. The CQC Plan shall be submitted for review a minimum of 10 calendar days prior to the Coordination Meeting. During the meeting, a mutual understanding of the system details shall be developed, including the forms for recording the CQC operations, control activities, testing, administration of the system for both onsite and offsite work, and the interrelationship of Contractor's Management and control with the Government's Quality Assurance. Minutes of the meeting shall be prepared by the Government and signed by both the Contractor and the Contracting Officer. The minutes shall become a part of the contract file. There may be occasions when subsequent conferences will be called by either party to reconfirm mutual understandings and/or address deficiencies in the CQC system or procedures which may require corrective action by the Contractor.

## 3.4 QUALITY CONTROL ORGANIZATION

### 3.4.1 Personnel Requirements

The requirements for the CQC organization are a CQC System Manager and sufficient number of additional qualified personnel to ensure safety and contract compliance. The Safety and Health Manager shall receive direction and authority from the CQC System Manager and shall serve as a member of the CQC staff. Personnel identified in the technical provisions as requiring specialized skills to assure the required work is being performed properly will also be included as part of the CQC organization. The Contractor's CQC staff shall maintain a presence at the site at all times during progress of the work and have complete authority and responsibility to take any action necessary to ensure contract compliance. The CQC staff shall be subject to acceptance by the Contracting Officer. The Contractor shall provide adequate office space, filing systems and other resources as necessary to maintain an effective and fully functional CQC organization. Complete records of all letters, material submittals, shop drawing submittals, schedules and all other project documentation shall be promptly furnished to the CQC organization by the Contractor. The CQC organization shall be responsible to maintain these documents and records at the site at all times, except as otherwise acceptable to the Contracting Officer.

### 3.4.2 CQC System Manager

The Contractor shall identify as CQC System Manager an individual within the onsite work organization who shall be responsible for overall management of CQC and have the authority to act in all CQC matters for the Contractor. The CQC System Manager shall be a graduate engineer, graduate architect, or a graduate of construction management, with a minimum of 5 years construction experience on construction similar to this contract. This CQC System Manager shall be on the site at all times during construction and shall be employed by the prime Contractor. The CQC System Manager shall be assigned as System Manager but may have duties as project superintendent in addition to quality control. An alternate for the CQC System Manager shall be identified in the plan to serve in the event of the System Manager's absence. The requirements for the alternate shall be the same as for the designated CQC System Manager.

### 3.4.3 CQC Personnel

In addition to CQC personnel specified elsewhere in the contract, the Contractor shall provide as part of the CQC organization specialized personnel to assist the CQC System Manager for the following areas: electrical, mechanical, civil, structural, environmental, architectural, materials technician, submittals clerk, . These individuals may be employees of the prime or subcontractor; be responsible to the CQC System Manager; be physically present at the construction site during work on their areas of responsibility; have the necessary education and/or experience in accordance with the experience matrix listed herein. These individuals may perform other duties but must be allowed sufficient time to perform their assigned quality control duties as described in the Quality Control Plan.

Experience Matrix

| | Area | Qualifications |
|---|---|---|
| a. | Civil | Graduate Civil Engineer with 2 years experience in the type of work being performed on this project or technician with 5 yrs related experience |
| b. | Mechanical | Graduate Mechanical Engineer with 2 yrs experience or person with 5 yrs related experience |
| c. | Electrical | Graduate Electrical Engineer with 2 yrs related experience or person with 5 yrs related experience |
| d. | Structural | Graduate Structural Engineer with 2 yrs experience or person with 5 yrs related experience |
| e. | Architectural | Graduate Architect with 2 yrs experience or person with 5 yrs related experience |
| f. | Environmental | Graduate Environmental Engineer with 3 yrs experience |
| g. | Submittals | Submittal Clerk with 1 yr experience |
| h. | Concrete, Pavements and Soils | Materials Technician with 2 yrs experience for the appropriate area |

3.4.4 Additional Requirement

In addition to the above experience and education requirements the CQC System Manager shall have completed the course entitled "Construction Quality Management For Contractors". Specific times and locations for this training are available from the Contracting Officer.

3.4.5 Organizational Changes

The Contractor shall maintain the CQC staff at full strength at all times. When it is necessary to make changes to the CQC staff, the Contractor shall revise the CQC Plan to reflect the changes and submit the changes to the

Contracting Officer for acceptance.

## 3.5 SUBMITTALS AND DELIVERABLES

Submittals, if needed, shall be made as specified in Section 01330 SUBMITTAL PROCEDURES. The CQC organization shall be responsible for certifying that all submittals and deliverables are in compliance with the contract requirements. When Section 15950A HEATING, VENTILATING AND AIR CONDITIONING (HVAC) CONTROL SYSTEMS; 15951 DIRECT DIGITAL CONTROL FOR HVAC; 15990A TESTING, ADJUSTING, AND BALANCING OF HVAC SYSTEMS; or 15995 COMMISSIONING OF HVAC SYSTEMS are included in the contract, the submittals required by those sections shall be coordinated with Section 01330 SUBMITTAL PROCEDURES to ensure adequate time is allowed for each type of submittal required.

## 3.6 CONTROL

Contractor Quality Control is the means by which the Contractor ensures that the construction, to include that of subcontractors and suppliers, complies with the requirements of the contract. At least three phases of control shall be conducted by the CQC System Manager for each definable feature of the construction work as follows:

### 3.6.1 Preparatory Phase

This phase shall be performed prior to beginning work on each definable feature of work, after all required plans/documents/materials are approved/accepted, and after copies are at the work site. This phase shall include:

a. A review of each paragraph of applicable specifications, reference codes, and standards. A copy of those sections of referenced codes and standards applicable to that portion of the work to be accomplished in the field shall be made available by the Contractor at the preparatory inspection. These copies shall be maintained in the field and available for use by Government personnel until final acceptance of the work.

b. A review of the contract drawings.

c. A check to assure that all materials and/or equipment have been tested, submitted, and approved.

d. Review of provisions that have been made to provide required control inspection and testing.

e. Examination of the work area to assure that all required preliminary work has been completed and is in compliance with the contract.

f. A physical examination of required materials, equipment, and sample work to assure that they are on hand, conform to approved shop drawings or submitted data, and are properly stored.

g. A review of the appropriate activity hazard analysis to assure safety requirements are met.

h. Discussion of procedures for controlling quality of the work including repetitive deficiencies. Document construction

tolerances and workmanship standards for that feature of work.

i. A check to ensure that the portion of the plan for the work to be performed has been accepted by the Contracting Officer.

j. Discussion of the initial control phase.

k. The Government shall be notified at least 48 hours in advance of beginning the preparatory control phase. This phase shall include a meeting conducted by the CQC System Manager and attended by the superintendent, other CQC personnel (as applicable), and the foreman responsible for the definable feature. The results of the preparatory phase actions shall be documented by separate minutes prepared by the CQC System Manager and attached to the daily CQC report. The Contractor shall instruct applicable workers as to the acceptable level of workmanship required in order to meet contract specifications.

3.6.2 Initial Phase

This phase shall be accomplished at the beginning of a definable feature of work. The following shall be accomplished:

a. A check of work to ensure that it is in full compliance with contract requirements. Review minutes of the preparatory meeting.

b. Verify adequacy of controls to ensure full contract compliance. Verify required control inspection and testing.

c. Establish level of workmanship and verify that it meets minimum acceptable workmanship standards. Compare with required sample panels as appropriate.

d. Resolve all differences.

e. Check safety to include compliance with and upgrading of the safety plan and activity hazard analysis. Review the activity analysis with each worker.

f. The Government shall be notified at least 24 hours in advance of beginning the initial phase. Separate minutes of this phase shall be prepared by the CQC System Manager and attached to the daily CQC report. Exact location of initial phase shall be indicated for future reference and comparison with follow-up phases.

g. The initial phase should be repeated for each new crew to work onsite, or any time acceptable specified quality standards are not being met.

3.6.3 Follow-up Phase

Daily checks shall be performed to assure control activities, including control testing, are providing continued compliance with contract requirements, until completion of the particular feature of work. The checks shall be made a matter of record in the CQC documentation. Final follow-up checks shall be conducted and all deficiencies corrected prior to the start of additional features of work which may be affected by the deficient work. The Contractor shall not build upon nor conceal non-conforming work.

### 3.6.4 Additional Preparatory and Initial Phases

Additional preparatory and initial phases shall be conducted on the same definable features of work if: the quality of on-going work is unacceptable; if there are changes in the applicable CQC staff, onsite production supervision or work crew; if work on a definable feature is resumed after a substantial period of inactivity; or if other problems develop.

## 3.7 TESTS

### 3.7.1 Testing Procedure

The Contractor shall perform specified or required tests to verify that control measures are adequate to provide a product which conforms to contract requirements. Upon request, the Contractor shall furnish to the Government duplicate samples of test specimens for possible testing by the Government. Testing includes operation and/or acceptance tests when specified. The Contractor shall procure the services of a Corps of Engineers approved testing laboratory or establish an approved testing laboratory at the project site. The Contractor shall perform the following activities and record and provide the following data:

a. Verify that testing procedures comply with contract requirements.

b. Verify that facilities and testing equipment are available and comply with testing standards.

c. Check test instrument calibration data against certified standards.

d. Verify that recording forms and test identification control number system, including all of the test documentation requirements, have been prepared.

e. Results of all tests taken, both passing and failing tests, shall be recorded on the CQC report for the date taken. Specification paragraph reference, location where tests were taken, and the sequential control number identifying the test shall be given. If approved by the Contracting Officer, actual test reports may be submitted later with a reference to the test number and date taken. An information copy of tests performed by an offsite or commercial test facility shall be provided directly to the Contracting Officer. Failure to submit timely test reports as stated may result in nonpayment for related work performed and disapproval of the test facility for this contract.

### 3.7.2 Testing Laboratories

#### 3.7.2.1 Capability Check

The Government reserves the right to check laboratory equipment in the proposed laboratory for compliance with the standards set forth in the contract specifications and to check the laboratory technician's testing procedures and techniques. Laboratories utilized for testing soils, concrete, asphalt, and steel shall meet criteria detailed in ASTM D 3740 and ASTM E 329.

3.7.2.2 Capability Recheck

If the selected laboratory fails the capability check, the Contractor will be assessed a charge of $1,000.00 to reimburse the Government for each succeeding recheck of the laboratory or the checking of a subsequently selected laboratory. Such costs will be deducted from the contract amount due the Contractor.

3.7.3 Onsite Laboratory

The Government reserves the right to utilize the Contractor's control testing laboratory and equipment to make assurance tests, and to check the Contractor's testing procedures, techniques, and test results at no additional cost to the Government.

3.7.4 Furnishing or Transportation of Samples for Testing

Costs incidental to the transportation of samples or materials shall be borne by the Contractor. Samples of materials for test verification and acceptance testing by the Government shall be delivered to the Contracting Officer.

Coordination for each specific test, exact delivery location, and dates will be made through the Area Office.

3.8 COMPLETION INSPECTION

3.8.1 Punch-Out Inspection

Near the end of the work, or any increment of the work established by a time stated in the SPECIAL CONTRACT REQUIREMENTS Clause, "Commencement, Prosecution, and Completion of Work", or by the specifications, the CQC Manager shall conduct an inspection of the work. A punch list of items which do not conform to the approved drawings and specifications shall be prepared and included in the CQC documentation, as required by paragraph DOCUMENTATION. The list of deficiencies shall include the estimated date by which the deficiencies will be corrected. The CQC System Manager or staff shall make a second inspection to ascertain that all deficiencies have been corrected. Once this is accomplished, the Contractor shall notify the Government that the facility is ready for the Government Pre-Final inspection.

3.8.2 Pre-Final Inspection

The Government will perform the pre-final inspection to verify that the facility is complete and ready to be occupied. A Government Pre-Final Punch List may be developed as a result of this inspection. The Contractor's CQC System Manager shall ensure that all items on this list have been corrected before notifying the Government, so that a Final inspection with the customer can be scheduled. Any items noted on the Pre-Final inspection shall be corrected in a timely manner. These inspections and any deficiency corrections required by this paragraph shall be accomplished within the time slated for completion of the entire work or any particular increment of the work if the project is divided into increments by separate completion dates.

3.8.3 Final Acceptance Inspection

The Contractor's Quality Control Inspection personnel, plus the

superintendent or other primary management person, and the Contracting Officer's Representative shall be in attendance at the final acceptance inspection. Additional Government personnel including, but not limited to, those from Base/Post Civil Facility Engineer user groups, and major commands may also be in attendance. The final acceptance inspection will be formally scheduled by the Contracting Officer based upon results of the Pre-Final inspection. Notice shall be given to the Contracting Officer at least 14 days prior to the final acceptance inspection and shall include the Contractor's assurance that all specific items previously identified to the Contractor as being unacceptable, along with all remaining work performed under the contract, will be complete and acceptable by the date scheduled for the final acceptance inspection. Failure of the Contractor to have all contract work acceptably complete for this inspection will be cause for the Contracting Officer to bill the Contractor for the Government's additional inspection cost in accordance with the contract clause titled "Inspection of Construction".

## 3.9 DOCUMENTATION

The Contractor shall maintain current records providing factual evidence that required quality control activities and/or tests have been performed. These records shall include the work of subcontractors and suppliers and shall be on an acceptable form that includes, as a minimum, the following information:

a. Contractor/subcontractor and their area of responsibility.

b. Operating plant/equipment with hours worked, idle, or down for repair.

c. Work performed each day, giving location, description, and by whom. When Network Analysis (NAS) is used, identify each phase of work performed each day by NAS activity number.

d. Test and/or control activities performed with results and references to specifications/drawings requirements. The control phase shall be identified (Preparatory, Initial, Follow-up). List of deficiencies noted, along with corrective action.

e. Quantity of materials received at the site with statement as to acceptability, storage, and reference to specifications/drawings requirements.

f. Submittals and deliverables reviewed, with contract reference, by whom, and action taken.

g. Offsite surveillance activities, including actions taken.

h. Job safety evaluations stating what was checked, results, and instructions or corrective actions.

i. Instructions given/received and conflicts in plans and/or specifications.

j. Contractor's verification statement.

These records shall indicate a description of trades working on the project; the number of personnel working; weather conditions encountered; and any delays encountered. These records shall cover both conforming and

deficient features and shall include a statement that equipment and materials incorporated in the work and workmanship comply with the contract. The original and one copy of these records in report form shall be furnished to the Government daily within 24 hours after the date covered by the report, except that reports need not be submitted for days on which no work is performed. As a minimum, one report shall be prepared and submitted for every 7 days of no work and on the last day of a no work period. All calendar days shall be accounted for throughout the life of the contract. The first report following a day of no work shall be for that day only. Reports shall be signed and dated by the CQC System Manager. The report from the CQC System Manager shall include copies of test reports and copies of reports prepared by all subordinate quality control personnel.

## 3.10 SAMPLE FORMS

Sample forms enclosed at the end of this section.

## 3.11 NOTIFICATION OF NONCOMPLIANCE

The Contracting Officer will notify the Contractor of any detected noncompliance with the foregoing requirements. The Contractor shall take immediate corrective action after receipt of such notice. Such notice, when delivered to the Contractor at the work site, shall be deemed sufficient for the purpose of notification. If the Contractor fails or refuses to comply promptly, the Contracting Officer may issue an order stopping all or part of the work until satisfactory corrective action has been taken. No part of the time lost due to such stop orders shall be made the subject of claim for extension of time or for excess costs or damages by the Contractor.

SECTION 01451 ATTACHMENT NO.1
GUIDE FOR LISTING DEFINABLE FEATURES OF CONSTRUCTION WORK

****** Contractor shall modify this guide to accommodate the project *****

DIVISION 1 - GENERAL REQUIREMENTS

(a) Special Project procedures to include coordination of work, Project meetings, Submittals and Quality Control
(b) Administrative Requirements
(c) Environmental Protection
(d) Historic Preservation
(e) Job Conditions

DIVISION 2 - SITE WORK

(a) Demolition
(b) Removal and Disposal of Asbestos Materials
(c) Excavation, Trenching and Backfilling for Utilities Systems to include sewer gravity drainage and water lines
(d) Clearing and Grubbing, Backfilling for Buildings
(e) Grading
(f) Fence, Chain-Link
(g) Concrete for sidewalks and Curbs
(h) Drilled Pile Foundation
(i) Bituminous Paving
(j) Underground Sprinkler Systems

DIVISION 3 - CONCRETE

(a) Concrete Materials, Concrete Procedures, Concrete Formwork, Forms, Form Ties and Accessories, Concrete Reinforcement, Concrete Accessories to Include Cast-in-Place Concrete, Specially Placed Concrete, Concrete Finishing, Concrete Curing and Grouting
(b) Concrete Restoration and Cleaning
(c) Precast Concrete
(d) Electrical and Mechanical Inserts
(e) Testing
(f) Approval of Samples

DIVISION 4 - MASONRY

(a) Masonry Procedures, Mortar, Mortar Accessories, Unit Masonry, Cavity Wall Construction to Include Bringing Inner and Outer Wythes Up Simultaneously, Reinforcement, Wall Ties, Flashing, Masonry Restoration and Cleaning
(b) Acceptance of Sample Panel for Cavity Wall Construction
(c) Composite Wall Construction
(d) Acceptance of Sample Panel for Composite Wall Construction
(e) CMU Partition Wall Construction to Include Prepared Openings for Ducts, Fire Dampers, Door Frames, Lintels and Bond Beams
(f) Acceptance of CMU Partition Wall Sample Panel
(g) Insulation and Waterproofing
(h) Testing

ATTACHMENT NO.1 (continued)
DIVISION 5 - METALS

(a) Structural Steel Framing To Include Metal Materials and Methods, Metal Fastening, Metal Joints, Welding, Expansion Control and Miscellaneous Metals
(b) Steel Roof Decking
(c) High Strength Bolts

DIVISION 6 - WOODS AND PLASTICS

(a) Rough Carpentry To Include Framing, Prefabricated Structural Wood, Fasteners and Supports, Roof Sheeting, Siding and Sub-Flooring, Insulation and Flashing (b) Finish Carpentry To Include Wood Treatment, Finish Flooring, Cabinets and Closets

DIVISION 7 - THERMAL AND MOISTURE PROTECTION

(a) Damproofing and Waterproofing
(b) Fireproofing
(c) Insulation, Flashing and Sheet Metal, Roof Accessories, Sealants, Shingles, Roof Tiles and Membrane Roofing (Built-Up and EPDM)

DIVISION 8 - DOORS AND WINDOWS

(a) Metal Doors and Frames, Wood and Plastic Doors, Special Doors, Door Opening Assemblies, Metal Windows, Wood and Plastic Windows, Special Windows, Glazing and Miscellaneous Hardware, Caulking

DIVISION 9 - FINISHES

(a) Ceramic Tile
(b) Gypsum Wallboard To Include Special Framing, Shaft Wall Framing System, Ceiling and Wall Opening
(c) Acoustical Treatment to include Metal Suspension System for Acoustical Tile and Lay-In-Panel Ceiling
(d) Wall Covering
(e) Carpeting
(f) Resilient Flooring
(g) Painting
(h) Furring (Metal)
(i) Plastering

DIVISION 10 - SPECIALTIES

(a) Metal Toilet Partitions
(b) Raised Floor System
(c) Movable Partitions
(d) Wardrobe
(e) Fire Extinguisher Cabinets
(f) Toilet Accessories

ATTACHMENT NO.1 (continued)
DIVISION 11 - EQUIPMENT

(a) Fueling System for Motor Vehicles
(b) Adjustable Loading Ramps
(c) Incinerator, Packaged Controlled Air
(d) Incinerator, Medical Waste, General Purpose, Field Erected
(e) Food Service Equipment
(f) Government Furnished Equipment

DIVISION 12 - FURNISHINGS

(a) Theater Chairs
(b) Blinds
(c) Drapes
(d) Lockers
(e) Training Equipment
(f) Furniture and Accessories
(g) Rugs and Mats
(h) Fabrics

DIVISION 13 - SPECIAL CONSTRUCTION

(a) RF Shielding
(b) Sky Lights
(c) Swimming Pool
(d) Energy Monitoring and Control System (EMCS)
(e) Pre-Engineered Structures
(f) Liquid and Gas Storage Tanks
(g) Vaults

DIVISION 14 - CONVEYING SYSTEMS

(a) Shaft Construction To Include Guides and Guide Rails
(b) Car Assembly
(c) Machine Room Layout
(d) Entrances
(e) Operating and Signal Devices
(f) Fire/Emergency Power Operations
(g) Lighting, Power and Wiring
(h) Elevator Power Unit
(i) Acceptance Testing To Include Communications, Safety, Weights, Emergency and Fire Operations, Dispatch System

DIVISION 15 - MECHANICAL

(a) Insulation to Include:
(1) Pipes
(2) Ducts
(3) Equipment
(4) High Density Inserts, Insulation Protective Shields, Clips or U Bolt Supports for Multiple Pipe Hanger Supports
(5) Perimeter Insulation

ATTACHMENT NO. 1 (continued)

(b) Plumbing Systems
(1) Waste/Vent Piping To Include: Underground Soil Piping, Above Ground Soil Piping
(2) Interior Piping Rough-In To Include: Galvanized Black Iron and Copper Including Drains, Fittings, Valves and Piping Supports
(3) Plumbing Fixtures To Include Flush Valves, Faucets and Accessories
(4) Cleaning, Balancing and Operational Testing
(c) Heating systems
(1) Equipment and System Accessories
(2) Hot Water/Steam Piping Supports
(3) Fuel Oil/Gas Piping and Supports
(4) System Testing and Balancing
(d) Air Distribution Systems
(1) Equipment and Accessories
(2) Duct Work To Include Galvanized, Aluminum, Flexible and Fiberglass, Supports, Dampers, Louvers, Diffusers, Duct Line Supports and Fire-Dampers
(e) Refrigeration Systems
(1) Equipment and Accessories
(2) Chilled Water/Condenser Water Piping and Supports
(3) Refrigerant Piping and Supports
(4) System Testing
(f) Automatic Temperature Control Systems
(1) Equipment and Materials
(2) Installation of Materials and Equipment
(3) System Testing
(g) Underground Heat Distribution Systems
(1) Manholes
(2) Piping and Supports
(3) Cathodic Protection
(h) Sprinkler Systems
(1) Equipment
(2) Piping and Supports
(3) Accessories
(i) Water Treatment Systems
(j) Welding - Piping Systems
(k) Hydrant Fueling System
(1) Piping and Pipe Supports
(2) Equipment
(3) Valves
(4) Accessories
(5) Welding
(6) Hydrant Pits
(7) Isolation Pits
(8) Pantographs
(9) Fuels Control System

DIVISION 16 - ELECTRICAL

(a) Exterior Electrical Distribution, Aerial
(1) Pole Setting
(2) Placement of Crossarms, Pins, Insulators, Pole Line Hardware and Conductors
(3) Placement of Fuse Cutouts, Surge Arresters, Reclosers, Potheads, Pole Mounted Transformers to Include Grounding Conductors, Testing and Cable Terminations
(b) Exterior Electrical Distribution, Underground
(1) Duct Line Excavation, Placement of Ducts and Misc. Materials
(2) Placement of In Ground Junction or Pull Boxes and Manholes
(3) Placement of Duct Bank Concrete Encasement

(4) Transformer Pad Placement
(5) Mounting of Pad Mounted Transformers
(6) Cable Placement to Include Splicing, Fire-Proofing and Cable Terminations
(7) Grounding Conductors and Testing
(c) Electrical Distribution, Interior
(1) Wiring Methods to Include Conduit Rough-in, Raceway Boxes, Outlet
ATTACHMENT NO.1 (continued)

Boxes, Panelboard Cabinets, Placement of Conductors and Conduit Placement Below the Slab for Slab-On-Grade Construction
(2) Wiring Devices, Panelboards, Switch-Boards and Lighting Fixtures
(3) Motors and Transformers
(4) Testing
(d) Fire Detection and Alarm System
(1) Wiring Methods to Include Conduit, Ground Rods, Detectors, Control Panels, Power Supply, Door Holders, Audible Fire Alarm and Annunciator Panel
(2) Testing

---End of Attachment No.1---

SECTION 01451 ATTACHMENT NO.2
PREPARATORY PHASE CHECKLIST

CONTRACTOR'S NAME (Address)

Contract No.:_____ Date Preparatory Held:_____

Title: _____ Spec Section:_____

_____ Drawing No(s):_____

Definable Feature of Work:_____

_____

A. PERSONNEL PRESENT:

| Name | Position | Company |
|---|---|---|
| 1. | | |
| 2. | | |
| 3. | | |
| 4. | | |
| 5. | | |
| 6. | | |
| 7. | | |
| 8. | | |

(List additional personnel on reverse side)

B. DRAWINGS AND SPECS:

I. Has each spec paragraph, contract drawing, and shop drawing been studied? YES _____ NO _____

II. Do all parties have up-to-date drawings and specifications?
YES _____ NO_____

C. SHOP DRAWINGS INVOLVED:

| Transmittal/Item | Code | Contractor or Gov't Approval |
|---|---|---|
| 1. | | |
| 2. | | |
| 3. | | |
| 4. | | |

ATTACHMENT NO.2 (continued)
D. MATERIALS:

I. Are all materials on hand? YES _____ NO _____

II. Have all materials been checked for contract compliance against approved shop drawings? YES _____ NO _____

III. Items not on hand or not in accordance with transmittals (if not on hand, check during initial phase):

1. _____

2. _____

3. _____

4. _____

E. TESTS required in accordance with contract requirements:

| Test/Paragraph | Frequency |
|---|---|
| 1. _____ | _____ |
| 2. _____ | _____ |
| 3. _____ | _____ |
| 4. _____ | _____ |
| 5. _____ | _____ |
| 6. _____ | _____ |

F. ACCIDENT PREVENTION: Has Hazard Analysis been completed?
YES _____ NO _____
If yes, attach a copy, if no, explain:

_____

_____

_____

_____

_____

ATTACHMENT NO.2 (continued)

G. EQUIPMENT Requiring Operational Check:

1._____

2._____

3._____

4._____

H. WORKMANSHIP: Have procedures for accomplishing work been reviewed with appropriate people? YES _____ NO _____

I. PREVIOUS WORK: Has all preliminary work been accomplished in accordance with contract requirements and is this feature of work ready to start? YES _____ NO _____

Explain any problems: _____

_____

_____

_____

J. HI-LIGHTING SPECIFIC ITEMS: Hi-light specific items noted during the Preparatory Phase inspection. ie, (Med. Voltage cable shall be hi-pot tested).

K. OTHER COMMENTS: _____

_____

_____

_____

_____
Quality Control Representative
Signature

SECTION 01451 ATTACHMENT NO.3
INITIAL PHASE CHECKLIST

CONTRACTOR'S NAME (Address)

Contract No.:_____ Date Initial Held: _____

Title:_____ Spec Section:_____

Drawing No(s).:_____

Definable Feature of Work:_____

_____

_____

A. PERSONNEL PRESENT:

Name Position Company

1._____

2._____

3._____

4._____

5._____

6._____

B. MATERIALS being used are in strict accordance with the contract plans and specifications? YES _____ NO _____

If not, explain:_____

_____

_____

_____

ATTACHMENT NO.3 (continued)
C. WORKMANSHIP:

I. Procedures and/or work methods witnessed are in strict compliance with the requirement of the contract specifications? YES _____ NO _____

If not, explain: _____

_____

_____

II. Workmanship is acceptable? YES _____ NO _____

State area where improvement is needed: _____

_____

_____

D. SAFETY violations and corrective action taken:_____

_____

_____

E. COMMENTS: _____

_____

_____

_____

_____

_____
Quality Control Representative
Signature

SECTION 01451 ATTACHMENT NO.4
DAILY CONSTRUCTION QUALITY CONTROL REPORT
(Sample of Typical Contractor Daily Quality Control Report)

CONTRACTORS NAME (Address)

Date _____ Report No. _____ Contract No. DAC( )
65-__-C-_____ Project Name and Location of work: _____

Weather:(Clear) (P.Cloudy) (Cloudy) (Rain: ___ inches)
(Temp.____min.____max.) Other Weather Conditions _____

1. Contractor (C) or Sub-contractor (S), and Area of Responsibility:

a. (
)_____ b.
( )_____
c. (
)_____ d.
( )_____
e. ( )_____

2. Equipment Data. (Indicate items of construction equipment, other than hand tools, at the job site and whether or not used):

_____
_____
_____
_____

3. Work Performed Today (Indicate identity of Contractor and Sub-contractors, location , and description of work:

_____
_____
_____
_____

4. Results of Surveillance: (Include satisfactory work completed, or deficiencies with action to be taken):

a. Preparatory
Phase:_____
_____
_____
_____

b. Initial
Phase:_____
_____
_____
_____

c. Follow-up
Phase:_____
_____

_____
_____

DAILY CONSTRUCTION QUALITY CONTROL REPORT (Continued)

5. Tests performed as required by plans and specifications and the results:

_____
_____
_____

6. Verbal instructions received (List instructions given by Government personnel on construction deficiencies, retesting required, etc. Include the name of Government person, time and place instructions given, and action taken to comply:

_____
_____
_____

7. Job Safety (Include deficiencies and corrective action taken:

_____
_____
_____

8. Equipment Data (Indicate items of construction equipment, other than hand tools, at the job site, and whether or not used):_____

_____
_____
_____

9. Material and equipment items that arrived at the job site. Indicate compliance or non-compliance of these items with approved shop drawings, the contract plans and specifications, and the storage of the item is required prior to the time of installation, indicate how this storage was provided and whether or not it is adequate:_____

_____
_____

10. Remarks (Cover any conflicts in the plans and specifications, instructions, or delays):_____

_____

_____

CONTRACTOR'S VERIFICATION: THE ABOVE REPORT IS COMPLETE AND ALL DATA LISTED IS CORRECT. ALL MATERIALS PROVIDED, EQUIPMENT USED, AND WORKMANSHIP FOR THIS REPORTING PERIOD ARE IN COMPLIANCE WITH THE CONTRACT PLANS AND SPECIFICATIONS EXCEPT AS NOTED ABOVE.

SIGNED

_____ CONTRACTOR'S QC SYSTEM MANAGER

SECTION 01451 ATTACHMENT NO.4
DAILY CONSTRUCTION QUALITY CONTROL REPORT (RMS QC)

CONTRACTORS QUALITY CONTROL REPORT (QCR) DAILY LOG OF CONSTRUCTION - MILITARY REPORT NUMBER 1 PAGE 1
DATE 29 Feb 00 - Tuesday
PROJECT Sample Project ND RMS, Langley AFB, Virginia
CONTRACT NUMBER DACA65-99-C-XXXX
CONTRACTOR WEATHER No Weather Reported
QC NARRATIVES(S) Activities in Progress: Include comments here.
Did anything develop that may lead to a Change Order/Claim? No
Safety Inspection / Safety Meeting: Include meetings here. Safety: Inspections made, Deficiencies noted): Include safety inspections and safety deficiencies here. Safety: Correction Action taken: Corrective Action Verbal Instructions given by Government: Include instructions here. Were there any Delays in Work Progress today? None.
PREP/INITIAL DATES (Preparatory and initial dates held and advance notice)
No preparatory or initial inspections were held today.

ACTIVITY START/FINISH No activities were started or finished today.
QC REQUIREMENTS No QC requirements were completed today.

CONTRACTORS QUALITY CONTROL REPORT (QCR) DAILY LOG OF CONSTRUCTION - MILITARY REPORT NUMBER 1 PAGE 2
DATE 29 Feb 00 - Tuesday
PROJECT Sample Project ND RMS, Langley AFB, Virginia
CONTRACT NUMBER DACA65-99-C-XXXX
QA/QC COMMENTS (Describe QC comments issued, report QA and QC comments corrected) No QC comments were issued today.
CONTRACTORS ON SITE (Report contractor's first and/or last date on site)
No contractors were reported on site today.
LABOR HOURS No labor hours were reported today.
EQUIPMENT HOURS No equipment hours were reported today.
EQUIPMENT CHECKS No equipment inspections were conducted today.
SAFETY CORRECTIONS (Report corrective actions for safety violations) No outstanding safety violations.
CONTRACTOR CERTIFICATION: On behalf of the contractor, I certify that this report is complete and correct and all equipment and material used and work performed during this reporting period are in compliance with the contract plans and specifications, to the best of my knowledge, except as noted above.
QC REPRESENTATIVE'S SIGNATURE DATE SUPERINTENDENT'S INITIALS DATE

SECTION 0141A ATTACHMENT NO.5
TEST REPORT

CONTRACTOR'S NAME (Address)

STRUCTURE OR BUILDING_____
CONTRACT NO._____

DESCRIPTION OF ITEM, SYSTEM OR PART OF SYSTEM
TESTED:_____
_____
_____
_____
_____

DESCRIPTION OF
TEST:_____
_____
_____
_____
_____

NAME AND TITLE OF PERSON IN CHARGE OF PERFORMING TESTS FOR CONTRACTOR:

NAME_____

TITLE_____

SIGNATURE_____

I HEREBY CERTIFY THAT THE ABOVE DESCRIBED ITEM, SYSTEM OR PART OF SYSTEM HAS BEEN TESTED AS INDICATED ABOVE AND FOUND TO BE ENTIRELY SATISFACTORY AS REQUIRED IN THE CONTRACT SPECIFICATIONS.

SIGNATURE OF CONTRACTOR QUALITY CONTROL INSPECTOR

_____

DATE_____

REMARKS:_____

_____

SECTION 01451 : ATTACHMENT NO. 6
DEFICIENCY TRACKING LOG

Construction Deficiency: _____

Contract No.

Safety Deficiency: _____

Project Title:

| Date Reported | Reported By | Deficient Work | Description of CorrectiveAction Taken | Date Corrected | Verified By |
|---|---|---|---|---|---|

-- End of Section --

SECTION TABLE OF CONTENTS

DIVISION 01 - GENERAL REQUIREMENTS

SECTION 01452

SPECIAL INSPECTION FOR SEISMIC-RESISTING SYSTEMS

**03/04**

PART 1 GENERAL

1.1 REFERENCES
1.2 SUBMITTALS
1.3 SPECIAL INSPECTOR
1.4 QUALITY ASSURANCE PLAN
1.5 SPECIAL INSPECTION
1.5.1 Continuous Special Inspection
1.5.2 Perodic Special Inspection

PART 2 PRODUCTS

PART 3 EXECUTION

3.1 PERFORMANCE OF INSPECTIONS
3.1.1 Piles
3.1.2 Structural Steel
3.1.3 Mechanical and Electrical Components
3.2 TESTING
3.3 REPORTING AND COMPLIANCE PROCEDURES

-- End of Section Table of Contents --

SECTION 01452

SPECIAL INSPECTION FOR SEISMIC-RESISTING SYSTEMS
**03/04**

PART 1 GENERAL

1.1 REFERENCES

The publications listed below form a part of this specification to the extent referenced. The publications are referred to in the text by basic designation only.

ACI INTERNATIONAL (ACI)

| | |
|---|---|
| ACI 530/530.1 | (2002) Building Code Requirements for Masonry Structures and Specifications for Masonry Structures and Commentaries |

U.S. FEDERAL EMERGENCY MANAGEMENT AGENCY (FEMA)

| | |
|---|---|
| FEMA 302 | (Feb 1998) NEHRP Recommended Provisions for Seismic Regulations for New Buildings and Other Structures |

1.2 SUBMITTALS

Government approval is required for submittals with a "G" designation; submittals not having a "G" designation are for information only. When used, a designation following the "G" designation identifies the office that will review the submittal for the Government. The following shall be submitted in accordance with Section 01330 SUBMITTAL PROCEDURES:

SD-07 Certificates

Special Inspector; G-AO

Certification attesting that the Special Inspector is qualified by knowledge and experience to perform the specified Special Inspections. Information, which provides evidence of the knowledge and experience necessary to qualify a person as a Special Inspector for the category of work being certified, will accompany the qualification.

Quality Assurance Plan; G-AO

A copy of the Quality Assurance Plan covered by a certificate indicating that the plan meets the content specified in this section.

1.3 SPECIAL INSPECTOR

A Special Inspector shall be used to perform Special Inspections required by this section. The Special Inspector is a person employed by the Contractor and approved by the Government as being qualified by knowledge

and experience to perform the Special Inspection for the category of work being constructed. Special Inspectors shall perform their duties independent from the construction quality control staff employed by the Contractor. More than one Special Inspector may be required to provide the varied knowledge and experience necessary to adequately inspect all of the categories of work requiring Special Inspection.

## 1.4 QUALITY ASSURANCE PLAN

A quality assurance plan shall be developed containing the following:

a. A list of all iems that require quality assurance Special Inspection and testing, including the type, frequency, extent, and duration of the special inspection for each item on this list.

b. A list of all items that require quality assurance testing, including the type and frequency of testing for each item on this list.

c. The content, distribution, and frequency of special inspection reports.

d. The content, distribution, and frequency of testing reports.

e. The procedures, controls, and people used within the Contractor's organization to develop, sign, and distribute Special Inspection and Testing reports along with the position title and pertinent qualifications of all Contractor personnel involved.

## 1.5 SPECIAL INSPECTION

The Special Inspection for seismic-resisting system components shall be done as specified. Special Inspector personnel shall be in addition to the quality control inspections and inspectors required elsewhere in this section.

### 1.5.1 Continuous Special Inspection

Continuous special inspection is the full time observation of the work by the Special Inspector present in the work area whenever work is being performed. Continuous special inspection shall be performed where specified for items as shown on the drawings.

### 1.5.2 Perodic Special Inspection

Perodic special inspection is the intermittent observation of the work by a Special Inspector present in the work area while work is being performed. The intermittent observation periods shall be at times of significant work, shall be recurrent over the complete work period, and shall total at least 25 percent of the total work time. Perodic special inspection shall be performed where specified for items as shown on the drawings.

# PART 2 PRODUCTS

Not Used

PART 3 EXECUTION

3.1 PERFORMANCE OF INSPECTIONS

Special Inspections shall be performed for the following where designated on the drawings:

3.1.1 Piles

a. Continuous special inspection during driving of piles and placement of concrete in piles.

3.1.2 Structural Steel

a. Continuous special inspection for all structural welding, except single pas filler welds not exceeding 5/16 inch in size and floor and roof deck welding.

3.1.3 Mechanical and Electrical Components

Special inspection of the mechanical and electrical components shall assure that the methods of anchoring and fastening indicated on the drawings are being complied with at the onset of construction of the component, and that the specified or shown number, spacing, and types of fasteners were actually installed. Special inspection for mechanical and electrical components shall be as follows:

a. Periodic special inspection during the anchorage of electrical equipment for emergency or standby power systems.

b. Periodic special inspection during the installation of anchorage of all other electrical equipment.

c. Periodic special inspection during the installation of HVAC ductwork that will contain hazardous materials.

3.2 TESTING

The special inspector shall be responsible for verifying that the testing requirements are performed by an approved testing agency for compliance with the following, where shown on the drawings:

a. Reinforcing and Prestressing Steel: Special testing of reinforcing and prestressing steel shall be as follows:

(1) Examine certified mill test reports for each shipment of reinforcing steel used in reinforced masonry shear walls. The special inspector shall determine conformance with the construction documents.

b. Structural Masonry: Verify that all quality assurance testing of structural masonry along with all material components is in accordance with the requirements of ACI 530/530.1 and complies with all acceptance provisions contained therein.

c. Structural Steel:

(1) Verify that all quality assurance testing needed to confirm required material properties contained in Section 05120 STRUCTURAL STEEL and given in the quality assurance plan has been done in accordance with applicable provisions in AISC Pub No. S341 and AISC Pub No. S342L and that the test results comply with all acceptance provisions contained therein.

d. Seismically Isolated Structures: Verify that the required system and component tests for seismically isolated structures have been done in accordance with FEMA 302 and comply with all acceptance provisions contained therin.

e. Energy Dissipation Systems: Verify that the required system and component tests for seismic energy dissipation systems have been done in accordance with FEMA 302 and comply with all acceptance provisions contained therein.

3.3 REPORTING AND COMPLIANCE PROCEDURES

a. On the first day of each month, the Contractor shall furnish to the Government five copies of the combined progress reports of the special inspector's observations. These progress reports shall list all special inspections of construction or reviews of testing performed during that month, note all uncorrected deficiencies, and describe the corrections made both to these deficiencies and to previously reported deficiencies. Each monthly report shall be signed by all special inspectors who performed special inspections of construction or reviewed testing during that month, regardless of whether they reported any deficiencies. Each monthly report shall be signed by the Contractor.

b. At completion of construction, each special inspector shall prepare and sign a final report attesting that all work they inspected and all testing and test reports they reviewed were completed in accordance with the approved construction documents and that deficiencies identified were satisfactorily corrected. The Contractor shall submit a combined final report containing the signed final reports of all the special inspectors. The Contractor shall sign the combined final report attesting that all final reports of special inspectors that performed work to comply with these construction documents are contained therein, and that the Contractor has reviewed and approved all of the individual inspector's final reports.

-- End of Section --

SECTION TABLE OF CONTENTS

DIVISION 01 - GENERAL REQUIREMENTS

SECTION 01452A

SPECIAL INSPECTION FOR SEISMIC-RESISTING SYSTEMS

**11/99**

PART 1 GENERAL

1.1 REFERENCES
1.2 SUBMITTALS
1.3 SPECIAL INSPECTOR
1.4 QUALITY ASSURANCE PLAN
1.5 SPECIAL INSPECTION
1.5.1 Continuous Special Inspection
1.5.2 Perodic Special Inspection

PART 2 PRODUCTS

PART 3 EXECUTION

3.1 PERFORMANCE OF INSPECTIONS
3.1.1 Piles
3.1.2 Structural Steel
3.1.3 Mechanical and Electrical Components
3.2 TESTING
3.3 REPORTING AND COMPLIANCE PROCEDURES

-- End of Section Table of Contents --

SECTION 01452A

SPECIAL INSPECTION FOR SEISMIC-RESISTING SYSTEMS
**11/99**

PART 1 GENERAL

1.1 REFERENCES

The publications listed below form a part of this specification to the extent referenced. The publications are referred to in the text by basic designation only.

ACI INTERNATIONAL (ACI)

| | |
|---|---|
| ACI 530/530.1 | (1995) Building Code Requirements for Masonry Structures |

AMERICAN INSTITUTE OF STEEL CONSTRUCTION (AISC)

| | |
|---|---|
| AISC 341 | (1997) Seismic Provisions for Structural Steel Buildings |
| AISC 350 | (1999) Load and Resistance Factor Design (LRFD)Specification for Structural Steel Buildings |

U.S. FEDERAL EMERGENCY MANAGEMENT AGENCY (FEMA)

| | |
|---|---|
| FEMA 302 | (Feb 1998) NEHRP Recommended Provisions for Seismic Regulations for New Buildings and Other Structures |

1.2 SUBMITTALS

Government approval is required for submittals with a "G" designation; submittals not having a "G" designation are for information only. When used, a designation following the "G" designation identifies the office that will review the submittal for the Government. The following shall be submitted in accordance with Section 01330 SUBMITTAL PROCEDURES:

SD-07 Certificates

Special Inspector; G-AO

Certification attesting that the Special Inspector is qualified by knowledge and experience to perform the specified Special Inspections. Information, which provides evidence of the knowledge and experience necessary to qualify a person as a Special Inspector for the category of work being certified, will accompany the qualification.

Quality Assurance Plan; G-AO

A copy of the Quality Assurance Plan covered by a certificate indicating that the plan meets the content specified in this section.

## 1.3 SPECIAL INSPECTOR

A Special Inspector shall be used to perform Special Inspections required by this section. The Special Inspector is a person employed by the Contractor and approved by the Government as being qualified by knowledge and experience to perform the Special Inspection for the category of work being constructed. Special Inspectors shall perform their duties independent from the construction quality control staff employed by the Contractor. More than one Special Inspector may be required to provide the varied knowledge and experience necessary to adequately inspect all of the categories of work requiring Special Inspection.

## 1.4 QUALITY ASSURANCE PLAN

A quality assurance plan shall be developed containing the following:

a. A list of all iems that require quality assurance Special Inspection and testing, including the type, frequency, extent, and duration of the special inspection for each item on this list.

b. A list of all items that require quality assurance testing, including the type and frequency of testing for each item on this list.

c. The content, distribution, and frequency of special inspection reports.

d. The content, distribution, and frequency of testing reports.

e. The procedures, controls, and people used within the Contractor's organization to develop, sign, and distribute Special Inspection and Testing reports along with the position title and pertinent qualifications of all Contractor personnel involved.

## 1.5 SPECIAL INSPECTION

The Special Inspection for seismic-resisting system components shall be done as specified. Special Inspector personnel shall be in addition to the quality control inspections and inspectors required elsewhere in this section.

### 1.5.1 Continuous Special Inspection

Continuous special inspection is the full time observation of the work by the Special Inspector present in the work area whenever work is being performed. Continuous special inspection shall be performed where specified for items as shown on the drawings.

### 1.5.2 Perodic Special Inspection

Perodic special inspection is the intermittent observation of the work by a Special Inspector present in the work area while work is being performed. The intermittent observation periods shall be at times of significant work, shall be recurrent over the complete work period, and shall total at least

25 percent of the total work time. Perodic special inspection shall be performed where specified for items as shown on the drawings.

PART 2 PRODUCTS

Not Used

PART 3 EXECUTION

3.1 PERFORMANCE OF INSPECTIONS

Special Inspections shall be performed for the following where designated on the drawings:

3.1.1 Piles

a. Continuous special inspection during driving of piles and placement of concrete in piles.

3.1.2 Structural Steel

a. Continuous special inspection for all structural welding, except single pass filler welds not exceeding 5/16 inch in size and floor and roof deck welding.

3.1.3 Mechanical and Electrical Components

Special inspection of the mechanical and electrical components shall assure that the methods of anchoring and fastening indicated on the drawings are being complied with at the onset of construction of the component, and that the specified or shown number, spacing, and types of fasteners were actually installed. Special inspection for mechanical and electrical components shall be as follows:

a. Periodic special inspection during the anchorage of electrical equipment for emergency or standby power systems.

b. Periodic special inspection during the installation of anchorage of all other electrical equipment.

c. Periodic special inspection during installation for flammable, combustible, or highly toxic piping systems and their associated mechanical units.

3.2 TESTING

The special inspector shall be responsible for verifying that the testing requirements are performed by an approved testing agency for compliance with the following, where shown on the drawings:

a. Reinforcing Steel: Special testing of reinforcing steel shall be as follows:

(1) Examine certified mill test reports for each shipment of reinforcing steel used in reinforced masonry shear walls. The special inspector shall determine conformance with the construction documents.

b. Structural Masonry: Verify that all quality assurance testing of structural masonry along with all material components is in accordance with the requirements of ACI 530/530.1 and complies with all acceptance provisions contained therein.

c. Structural Steel:

(1) Verify that all quality assurance testing needed to confirm required material properties contained in Section 05120 STRUCTURAL STEEL and given in the quality assurance plan has been done in accordance with applicable provisions in AISC 341 and AISC 350 and that the test results comply with all acceptance provisions contained therein.

d. Seismically Isolated Structures: Verify that the required system and component tests for seismically isolated structures have been done in accordance with FEMA 302 and comply with all acceptance provisions contained therin.

e. Energy Dissipation Systems: Verify that the required system and component tests for seismic energy dissipation systems have been done in accordance with FEMA 302 and comply with all acceptance provisions contained therein.

## 3.3 REPORTING AND COMPLIANCE PROCEDURES

a. On the first day of each month, the Contractor shall furnish to the Government five copies of the combined progress reports of the special inspector's observations. These progress reports shall list all special inspections of construction or reviews of testing performed during that month, note all uncorrected deficiencies, and describe the corrections made both to these deficiencies and to previously reported deficiencies. Each monthly report shall be signed by all special inspectors who performed special inspections of construction or reviewed testing during that month, regardless of whether they reported any deficiencies . Each monthly report shall be signed by the Contractor.

b. At completion of construction, each special inspector shall prepare and sign a final report attesting that all work they inspected and all testing and test reports they reviewed were completed in accordance with the approved construction documents and that deficiencies identified were satisfactorily corrected. The Contractor shall submit a combined final report containing the signed final reports of all the special inspectors. The Contractor shall sign the combined final report attesting that all final reports of special inspectors that performed work to comply with these construction documents are contained therein, and that the Contractor has reviewed and approved all of the individual inspector's final reports.

-- End of Section --

SECTION TABLE OF CONTENTS

DIVISION 01 - GENERAL REQUIREMENTS

SECTION 01500

TEMPORARY CONSTRUCTION FACILITIES

**03/04**

PART 1 GENERAL

1.1 Site Plan
1.2 Identification of Employees
1.3 Employee Parking
1.4 AVAILABILITY AND USE OF UTILITY SERVICES
1.4.1 Payment for Utility Services
1.4.2 Meters and Temporary Connections
1.4.3 Advance Deposit
1.4.4 Final Meter Reading
1.4.5 Sanitation
1.4.6 Telephone
1.5 BULLETIN BOARD, PROJECT SIGN, AND PROJECT SAFETY SIGN
1.5.1 Bulletin Board
1.5.2 Project and Safety Signs
1.6 PROTECTION AND MAINTENANCE OF TRAFFIC
1.6.1 Haul Roads
1.6.2 Barricades
1.7 CONTRACTOR'S TEMPORARY FACILITIES
1.7.1 Administrative Field Offices
1.7.2 Storage Area
1.7.3 Supplemental Storage Area
1.7.4 Appearance of Trailers
1.7.5 Maintenance of Storage Area
1.7.6 New Building
1.7.7 Security Provisions
1.8 GOVERNMENT FIELD OFFICE
1.8.1 Resident Engineer's Office
1.8.2 Trailer-Type Mobile Office
1.9 PLANT COMMUNICATION
1.10 TEMPORARY PROJECT SAFETY FENCING
1.11 CLEANUP
1.12 RESTORATION OF STORAGE AREA

-- End of Section Table of Contents --

SECTION 01500

TEMPORARY CONSTRUCTION FACILITIES
**03/04**

PART 1 GENERAL

1.1 Site Plan

The Contractor shall prepare a site plan indicating the proposed location and dimensions of any area to be fenced and used by the Contractor, the number of trailers to be used, avenues of ingress/egress to the fenced area and details of the fence installation. Any areas which may have to be graveled to prevent the tracking of mud shall also be identified. The Contractor shall also indicate if the use of a supplemental or other staging area is desired.

1.2 Identification of Employees

The Contractor shall be responsible for furnishing to each employee, and for requiring each employee engaged on the work to display, identification as approved and directed by the Contracting Officer. Prescribed identification shall immediately be delivered to the Contracting Officer for cancellation upon release of any employee. When required, the Contractor shall obtain and provide fingerprints of persons employed on the project. Contractor and subcontractor personnel shall wear identifying markings on hard hats clearly identifying the company for whom the employee works.

1.3 Employee Parking

Contractor employees shall park privately owned vehicles in an area designated by the Contracting Officer. This area will not necessarily be within reasonable walking distance of the construction site. The contractor shall provide transportation between the parking area and the construction site. Contractor employee parking shall not interfere with existing and established parking requirements of the military installation.

1.4 AVAILABILITY AND USE OF UTILITY SERVICES

1.4.1 Payment for Utility Services

The Government will make all reasonably required utilities available to the Contractor from existing outlets and supplies, as specified in the contract. Unless otherwise provided in the contract, the amount of each utility service consumed shall be charged to or paid for by the Contractor at prevailing rates charged to the Government or, where the utility is produced by the Government, at reasonable rates determined by the Contracting Officer. The Contractor shall carefully conserve any utilities furnished without charge.

1.4.2 Meters and Temporary Connections

The Contractor, at its expense and in a manner satisfactory to the Contracting Officer, shall provide and maintain necessary temporary connections, distribution lines, and meter bases (Government will provide

meters) required to measure the amount of each utility used for the purpose of determining charges. The Contractor shall notify the Contracting Officer, in writing, 5 working days before final electrical connection is desired so that a utilities contract can be established. The Government will provide a meter and make the final hot connection after inspection and approval of the Contractor's temporary wiring installation. The Contractor shall not make the final electrical connection.

1.4.3 Advance Deposit

An advance deposit for utilities consisting of an estimated month's usage or a minimum of $50.00 will be required. The last monthly bills for the fiscal year will normally be offset by the deposit and adjustments will be billed or returned as appropriate. Services to be rendered for the next fiscal year, beginning 1 October, will require a new deposit. Notification of the due date for this deposit will be mailed to the Contractor prior to the end of the current fiscal year.

1.4.4 Final Meter Reading

Before completion of the work and final acceptance of the work by the Government, the Contractor shall notify the Contracting Officer, in writing, 5 working days before termination is desired. The Government will take a final meter reading, disconnect service, and remove the meters. The Contractor shall then remove all the temporary distribution lines, meter bases, and associated paraphernalia. The Contractor shall pay all outstanding utility bills before final acceptance of the work by the Government.

1.4.5 Sanitation

The Contractor shall provide and maintain within the construction area minimum field-type sanitary facilities approved by the Contracting Officer. Government toilet facilities will not be available to Contractor's personnel.

1.4.6 Telephone

The Contractor shall make arrangements and pay all costs for telephone facilities desired.

1.5 BULLETIN BOARD, PROJECT SIGN, AND PROJECT SAFETY SIGN

1.5.1 Bulletin Board

Immediately upon beginning of work, the Contractor shall provide a weatherproof glass-covered bulletin board not less than 36 by 48 inches in size for displaying the Equal Employment Opportunity poster, a copy of the wage decision contained in the contract, Wage Rate Information poster, and other information approved by the Contracting Officer. The bulletin board shall be located at the project site in a conspicuous place easily accessible to all employees, as approved by the Contracting Officer. Legible copies of the aforementioned data shall be displayed until work is completed. Upon completion of work the bulletin board shall be removed by and remain the property of the Contractor.

1.5.2 Project and Safety Signs

The requirements for the signs, their content, and location shall be as

specified on the attached drawings. The signs shall be erected within 15 days after receipt of the notice to proceed. The data required by the safety sign shall be corrected daily, with light colored metallic or non-metallic numerals. Upon completion of the project, the signs shall be removed from the site.

## 1.6 PROTECTION AND MAINTENANCE OF TRAFFIC

During construction the Contractor shall provide access and temporary relocated roads as necessary to maintain traffic. The Contractor shall maintain and protect traffic on all affected roads during the construction period except as otherwise specifically directed by the Contracting Officer. Measures for the protection and diversion of traffic, including the provision of watchmen and flagmen, erection of barricades, placing of lights around and in front of equipment and the work, and the erection and maintenance of adequate warning, danger, and direction signs, shall be as required by the State and local authorities having jurisdiction. The traveling public shall be protected from damage to person and property. The Contractor's traffic on roads selected for hauling material to and from the site shall interfere as little as possible with public traffic. The Contractor shall investigate the adequacy of existing roads and the allowable load limit on these roads. The Contractor shall be responsible for the repair of any damage to roads caused by construction operations.

### 1.6.1 Haul Roads

The Contractor shall, at its own expense, construct access and haul roads necessary for proper prosecution of the work under this contract. Haul roads shall be constructed with suitable grades and widths; sharp curves, blind corners, and dangerous cross traffic shall be avoided. The Contractor shall provide necessary lighting, signs, barricades, and distinctive markings for the safe movement of traffic. The method of dust control, although optional, shall be adequate to ensure safe operation at all times. Location, grade, width, and alignment of construction and hauling roads shall be subject to approval by the Contracting Officer. Lighting shall be adequate to assure full and clear visibility for full width of haul road and work areas during any night work operations. Upon completion of the work, haul roads designated by the Contracting Officer shall be removed.

### 1.6.2 Barricades

The Contractor shall erect and maintain temporary barricades to limit public access to hazardous areas. Such barricades shall be required whenever safe public access to paved areas such as roads, parking areas or sidewalks is prevented by construction activities or as otherwise necessary to ensure the safety of both pedestrian and vehicular traffic. Barricades shall be securely placed, clearly visible with adequate illumination to provide sufficient visual warning of the hazard during both day and night.

## 1.7 CONTRACTOR'S TEMPORARY FACILITIES

### 1.7.1 Administrative Field Offices

The Contractor shall provide and maintain administrative field office facilities within the construction area at the designated site. Government office and warehouse facilities will not be available to the Contractor's personnel.

1.7.2 Storage Area

The Contractor shall construct a temporary 6 foot high chain link fence around trailers and materials. The fence shall include plastic strip inserts, colored brown, so that visibility through the fence is obstructed. Fence posts may be driven, in lieu of concrete bases, where soil conditions permit. All storage units shall be painted Langley Brown (Federal Standard 595a, 20100), Langley Beige or white. Trailers, materials, or equipment shall not be placed or stored outside the fenced area unless such trailers, materials, or equipment are assigned a separate and distinct storage area by the Contracting Officer away from the vicinity of the construction site but within the military boundaries. Trailers, equipment, or materials shall not be open to public view with the exception of those items which are in support of ongoing work on any given day. Materials shall not be stockpiled outside the fence in preparation for the next day's work. Mobile equipment, such as tractors, wheeled lifting equipment, cranes, trucks, and like equipment, shall be parked within the fenced area at the end of each work day.

1.7.3 Supplemental Storage Area

Upon Contractor's request, the Contracting Officer will designate another or supplemental area for the Contractor's use and storage of trailers, equipment, and materials. This area may not be in close proximity of the construction site but shall be within the military boundaries. Fencing of materials or equipment will not be required at this site; however, the Contractor shall be responsible for cleanliness and orderliness of the area used and for the security of any material or equipment stored in this area. Utilities will not be provided to this area by the Government.

1.7.4 Appearance of Trailers

Trailers utilized by the Contractor for administrative or material storage purposes shall present a clean and neat exterior appearance and shall be in a state of good repair. clean and neat exterior appearance and shall be in a state of good repair. The Contractor shall request Contracting Officer approval for the trailer location in writing at least 14 calendar days prior to placement of trailer at site. Office trailers shall be not more than 10' x 32' in size, shall be provided with a skirt on all sides, and shall be painted either Langley Brown (Federal Standard 595a, 20100), Langley Beige, or white. Trailers which, in the opinion of the Contracting Officer, require exterior painting or maintenance will not be allowed on the military property.

1.7.5 Maintenance of Storage Area

Fencing shall be kept in a state of good repair and proper alignment. Should the Contractor elect to traverse, with construction equipment or other vehicles, grassed or unpaved areas which are not established roadways, such areas shall be covered with a layer of gravel as necessary to prevent rutting and the tracking of mud onto paved or established roadways; gravel gradation shall be at the Contractor's discretion. Grass located within the boundaries of the construction site shall be mowed for the duration of the project. Grass and vegetation along fences, buildings, under trailers, and in areas not accessible to mowers shall be edged or trimmed neatly.

1.7.6 New Building

In the event a new building is constructed for the temporary project field office, it shall be a minimum 12 feet in width, 16 feet in length and have a minimum of 7 feet headroom. It shall be equipped with approved electrical wiring, at least one double convenience outlet and the required switches and fuses to provide 110-120 volt power. It shall be provided with a work table with stool, desk with chair, two additional chairs, and one legal size file cabinet that can be locked. The building shall be waterproof, shall be supplied with heater, shall have a minimum of two doors, electric lights, a telephone, a battery operated smoke detector alarm, a sufficient number of adjustable windows for adequate light and ventilation, and a supply of approved drinking water. Approved sanitary facilities shall be furnished. The windows and doors shall be screened and the doors provided with dead bolt type locking devices or a padlock and heavy duty hasp bolted to the door. Door hinge pins shall be non-removable. The windows shall be arranged to open and to be securely fastened from the inside. Glass panels in windows shall be protected by bars or heavy mesh screens to prevent easy access to the building through these panels. In warm weather, air conditioning capable of maintaining the office at 50 percent relative humidity and a room temperature 20 degrees F below the outside temperature when the outside temperature is 95 degrees F, shall be furnished. Any new building erected for a temporary field office shall be maintained by the Contractor during the life of the contract and upon completion and acceptance of the work shall become the property of the Contractor and shall be removed from the site. All charges for telephone service for the temporary field office shall be borne by the Contractor, including long distance charges up to a maximum of $75.00 per month.

1.7.7 Security Provisions

Adequate outside security lighting shall be provided at the Contractor's temporary facilities. The Contractor shall be responsible for the security of its own equipment; in addition, the Contractor shall notify the appropriate law enforcement agency requesting periodic security checks of the temporary project field office.

1.8 GOVERNMENT FIELD OFFICE

1.8.1 Resident Engineer's Office

The Contractor shall provide the Government Resident Engineer with an office, approximately 200 square feet in floor area, located where directed and providing space heat, electric light and power, and toilet facilities consisting of one lavatory and one water closet complete with connections to water and sewer mains. A mail slot in the door or a lockable mail box mounted on the surface of the door shall be provided. At completion of the project, the office shall remain the property of the Contractor and shall be removed from the site. Utilities shall be connected and disconnected in accordance with local codes and to the satisfaction of the Contracting Officer.

1.8.2 Trailer-Type Mobile Office

The Contractor may, at its option, furnish and maintain a trailer-type mobile office acceptable to the Contracting Officer and providing as a minimum the facilities specified above. The trailer shall be securely anchored to the ground at all four corners to guard against movement during high winds.

## 1.9 PLANT COMMUNICATION

Whenever the Contractor has the individual elements of its plant so located that operation by normal voice between these elements is not satisfactory, the Contractor shall install a satisfactory means of communication, such as telephone or other suitable devices. The devices shall be made available for use by Government personnel.

## 1.10 TEMPORARY PROJECT SAFETY FENCING

As soon as practicable, but not later than 15 days after the date established for commencement of work, the Contractor shall furnish and erect temporary project safety fencing at the work site. The safety fencing shall be a high visibility orange colored, high density polyethylene grid or approved equal, a minimum of 42 inches high, supported and tightly secured to steel posts located on maximum 10 foot centers, constructed at the approved location. The safety fencing shall be maintained by the Contractor during the life of the contract and, upon completion and acceptance of the work, shall become the property of the Contractor and shall be removed from the work site.

## 1.11 CLEANUP

Construction debris, waste materials, packaging material and the like shall be removed from the work site daily. Any dirt or mud which is tracked onto paved or surfaced roadways shall be cleaned away. Materials resulting from demolition activities which are salvageable shall be stored within the fenced area described above or at the supplemental storage area. Stored material not in trailers, whether new or salvaged, shall be neatly stacked when stored.

## 1.12 RESTORATION OF STORAGE AREA

Upon completion of the project and after removal of trailers, materials, and equipment from within the fenced area, the fence shall be removed and will become the property of the Contractor. Areas used by the Contractor for the storage of equipment or material, or other use, shall be restored to the original or better condition. Gravel used to traverse grassed areas shall be removed and the area restored to its original condition, including top soil and seeding as necessary.

-- End of Section --

SECTION TABLE OF CONTENTS

DIVISION 01 - GENERAL REQUIREMENTS

SECTION 01525

SAFETY AND OCCUPATIONAL HEALTH REQUIREMENTS

**11/02**

PART 1 GENERAL

1.1 REFERENCES
1.2 SUBMITTALS
1.3 DEFINITIONS
1.4 REGULATORY REQUIREMENTS
1.5 DRUG PREVENTION PROGRAM
1.6 SITE QUALIFICATIONS, DUTIES AND MEETINGS
1.6.1 Personnel Qualifications
1.6.1.1 Site Safety and Health Officer (SSHO)
1.6.1.2 Competent Person for Confined Space Entry
1.6.1.3 Competent Person for the Health Hazard Control and Respiratory Protection Program
1.6.1.4 Crane Operators
1.6.2 Personnel Duties
1.6.2.1 Site Safety and Health Officer (SSHO)/Superintendent
1.6.2.2 Certified Safety Professional (CSP)Certified Industrial Hygienist (CIH)
1.6.3 Meetings
1.6.3.1 Preconstruction Conference
1.6.3.2 Weekly Safety Meetings
1.6.3.3 Work Phase Meetings
1.7 TRAINING
1.7.1 New Employee Indoctrination
1.7.2 Periodic Training
1.7.3 Training on Activity Hazard Analysis (AHA)
1.8 ACCIDENT PREVENTION PLAN (APP)
1.8.1 EM 385-1-1 Contents
1.9 ACTIVITY HAZARD ANALYSIS (AHA)
1.10 DISPLAY OF SAFETY INFORMATION
1.11 SITE SAFETY REFERENCE MATERIALS
1.12 EMERGENCY MEDICAL TREATMENT
1.13 REPORTS
1.13.1 Accident Reports
1.13.2 Accident Notification
1.13.3 Regulatory Citations and Violations
1.13.3 Regulatory Citations and Violations
1.13.4 Crane Reports
1.13.5 Certificate of Compliance
1.14 HOT WORK

PART 2 PRODUCTS

2.1 FALL PROTECTION ANCHORAGE
2.2 CONFINED SPACE SIGNAGE

PART 3 EXECUTION

3.1 CONSTRUCTION AND/OR OTHER WORK
3.1.1 Hazardous Material Use
3.1.2 Hazardous Material Exclusions
3.1.3 Unforeseen Hazardous Material
3.2 PRE-OUTAGE COORDINATION MEETING
3.3 FALL HAZARD PROTECTION AND PREVENTION
3.3.1 Training
3.3.2 Fall Protection Equipment
3.3.2.1 Personal Fall Arrest Equipment
3.3.3 Fall Protection for Roofing Work
3.3.4 Safety Nets
3.3.5 Existing Anchorage
3.3.6 Horizontal Lifelines
3.4 SCAFFOLDING
3.5 EQUIPMENT
3.5.1 Material Handling Equipment
3.5.2 Weight Handling Equipment
3.5.3 Equipment and Mechanized Equipment
3.6 EXCAVATIONS
3.6.1 Utility Locations
3.6.2 Utility Location Verification
3.6.3 Utilities with Concrete Slabs
3.6.4 Shoring Systems
3.6.5 Trenching Machinery
3.7 ELECTRICAL
3.7.1 Conduct of Electrical Work
3.7.2 Portable Extension Cords
3.8 WORK IN CONFINED SPACES
3.9 CRYSTALLINE SILICA
3.10 HOUSEKEEPING
3.10.1 Clean-Up
3.10.2 Dust Control

-- End of Section Table of Contents --

SECTION 01525

SAFETY AND OCCUPATIONAL HEALTH REQUIREMENTS
**11/02**

PART 1 GENERAL

1.1 REFERENCES

The publications listed below form a part of this specification to the extent referenced. The publications are referred to within the text by the basic designation only.

AMERICAN NATIONAL STANDARDS INSTITUTE (ANSI)

| | |
|---|---|
| ANSI Z359.1 | (1999) Safety Requirements for Personal Fall Arrest Systems, Subsystems and Components |

ASME INTERNATIONAL (ASME)

| | |
|---|---|
| ASME B30.5 | (2000) Mobile and Locomotive Cranes |
| ASME B30.8 | (2000) Floating Cranes and Floating Derricks |
| ASME B30.22 | (2000) Articulating Boom Cranes |

OCCUPATIONAL SAFETY AND HEALTH ADMINISTRATION (OSHA)

| | |
|---|---|
| 29 CFR 1910 | Safety and Health Regulation in General Industry |
| 29 CFR 1910.94 | Ventilation |
| 29 CFR 1910.120 | Hazardous Waste Operations and Emergency Response |
| 29 CFR 1910.146 | Permit-Required Confined Spaces |
| 29 CFR 1926 | Safety and Health Regulations for Construction |
| 29 CFR 1926.65 | Hazardous Waste Operations and Emergency Response |
| 29 CFR 1926.500 | Fall Protection |

U. S. ARMY CORPS OF ENGINEERS (USACE)

| | |
|---|---|
| EM 385-1-1 | (2003) Safety and Health Requirements Manual |

NATIONAL FIRE PROTECTION ASSOCIATION (NFPA)

| | |
|---|---|
| NFPA 10 | (1998) Portable Fire Extinguishers |
| NFPA 70 | (2002) National Electrical Code |
| NFPA 241 | (2000) Safeguarding Construction, Alteration, and Demolition Operations |

1.2 SUBMITTALS

Government approval is required for submittals with a "G" designation; submittals not having a "G" designation are for information only or as otherwise designated. When used, a designation following the "G" designation identifies the office that will review the submittal for the Government. The following shall be submitted in accordance with Section 01330 SUBMITTAL PROCEDURES:

SD-01 Preconstruction Submittals

Accident Prevention Plan (APP); G

Activity Hazard Analysis (AHA); G

SD-06 Test Reports

Reports

Submit reports as their incidence occurs, in accordance with the requirements of the paragraph entitled, "Reports."

Accident Reports

Regulatory Citations and Violations

Certificate of Compliance (Crane)

SD-07 Certificates

Confined Space Entry Permit

1.3 DEFINITIONS

a. Associate Safety Professional (ASP). An individual who is currently certified by the Board of Certified Safety Professionals.

b. Certified Construction Health & Safety Technician (CHST). An individual who is currently certified by the Board of Certified Safety Professionals.

c. Certified Industrial Hygienist (CIH). An individual who is currently certified by the American Board of Industrial Hygiene.

d. Certified Safety Professional (CSP). An individual who is currently certified by the Board of Certified Safety Professionals.

e. Certified Safety Trained Supervisor (STS). An individual who is currently certified by the Board of Certified Safety Professionals.

f. High Visibility Accident. Any mishap which may generate publicity and/or high visibility.

g. Low-slope roof. A roof having a slope less than or equal to 4 in 12 (vertical to horizontal).

h. Medical Treatment. Treatment administered by a physician or by registered professional personnel under the standing orders of a physician. Medical treatment does not include first aid treatment even through provided by a physician or registered personnel.

i. Multi-Employer Work Site (MEWS). A multi-employer work site, as defined by OSHA, is one in which many employers occupy the same site. The Government considers the Prime Contractor to be the "controlling authority" for all work site safety and health of the subcontractors.

j. Operating Envelope. The area surrounding any crane. Inside this "envelope" is the crane, the operator, riggers, rigging gear between the hook and the load, the load and the crane's supporting structure (ground, rail, etc.).

k. Recordable Injuries or Illnesses. Any work-related injury or illness that results in:

(1) Death, regardless of the time between the injury and death, or the length of the illness;

(2) Days away from work;

(3) Restricted work;

(4) Transfer to another job;

(5) Medical treatment beyond first aid;

(6) Loss of consciousness; or

(7) A significant injury or illness diagnosed by a physician or other licensed health care professional, even if it did not result in (1) through (6) above.

l. Site Safety and Health Officer (SSHO). The superintendent or other qualified or competent person who is responsible for the on-site safety and health required for the project. The Contractor quality control (QC) person can be the SSHO on this project.

m. Steep roof. A roof having a slope greater than 4 in 12 (vertical to horizontal).

n. "USACE" property and equipment specified in USACE EM 385-1-1

should be interpreted as Government property and equipment.

o. Weight Handling Equipment (WHE) Accident. A WHE accident occurs when any one or more of the six elements in the operating envelope fails to perform correctly during operation, including operation during maintenance or testing resulting in personnel injury or death; material or equipment damage; dropped load; derailment; two-blocking; overload; and collision, including unplanned contact between the load, crane, and/or other objects. A dropped load, derailment, two-blocking, overload and collision are considered accidents even though no material damage or injury occurs. A component failure (e.g., motor burnout, gear tooth failure, bearing failure) is not considered an accident solely due to material or equipment damage unless the component failure results in damage to other components (e.g., dropped boom, dropped load, roll over, etc.).

## 1.4 REGULATORY REQUIREMENTS

In addition to the detailed requirements included in the provisions of this contract, work performed shall comply with USACE EM 385-1-1.

## 1.5 DRUG PREVENTION PROGRAM

Conduct a proactive drug and alcohol use prevention program for all workers, prime and subcontractor, on the site. Ensure that no employee uses illegal drugs or consumes alcohol during work hours. Ensure there are no employees under the influence of drugs or alcohol during work hours. After accidents, collect blood, urine, or saliva specimens and test the injured and involved employees for the influence of drugs and alcohol. A copy of the test shall be made available to the Contracting Officer upon request.

## 1.6 SITE QUALIFICATIONS, DUTIES AND MEETINGS

### 1.6.1 Personnel Qualifications

#### 1.6.1.1 Site Safety and Health Officer (SSHO)

Site Safety and Health Officer (SSHO) shall be provided at the work site at all times to perform safety and occupational health management, surveillance, inspections, and safety enforcement for the Contractor. The SSHO shall meet the following requirements:

Level 3:
A minimum of 5 years safety work on similar projects.
30-hour OSHA construction safety class or equivalent within the last 5 years.
An average of at least 24 hours of formal safety training each year for the past 5 years.
Competent person training as needed.1.6.1.2 Competent Person for Confined Space Entry

Provide a competent person meeting the requirements of EM 385-1-1 who is assigned in writing by the Designated Authority to assess confined spaces and who possesses demonstrated knowledge, skill and ability to:

a. Identify the structure, location, and designation of confined and permit-required confined spaces where work is done;

b. Calibrate and use testing equipment including but not limited to, oxygen indicators, combustible gas indicators, carbon monoxide indicators, and carbon dioxide indicators, and to interpret accurately the test results of that equipment;

c. Perform all required tests and inspections specified in 29 CFR 1910.146 and 29 CFR 1915 Subpart B;

d. Assess hazardous conditions including atmospheric hazards in confined space and adjacent spaces and specify the necessary protection and precautions to be taken;

e. Determine ventilation requirements for confined space entries and operations;

f. Assess hazards associated with hot work in confined and adjacent space and determine fire watch requirements; and,

g. Maintain records required.

1.6.1.3 Competent Person for the Health Hazard Control and Respiratory Protection Program

Provide a competent person meeting the requirements of EM 385-1-1 who is:

a. Capable by education, specialized training and/or experience of anticipating, recognizing, and evaluating employee exposure to hazardous chemical, physical and biological agents in accordance with USACE EM 385-1-1, Section 6.

b. Capable of specifying necessary controls and protective actions to ensure worker health.

1.6.1.4 Crane Operators

Crane operators shall meet the requirements in USACE EM 385-1-1, Appendix G.

1.6.2 Personnel Duties

1.6.2.1 Site Safety and Health Officer (SSHO)/Superintendent

a. Conduct daily safety and health inspections and maintain a written log which includes area/operation inspected, date of inspection, identified hazards, recommended corrective actions, estimated and actual dates of corrections. Safety inspection logs shall be attached to the Contractors' daily production report.

b. Conduct mishap investigations and complete required reports. Maintain the OSHA Form 300 and Daily Production reports for prime and sub-contractors.

c. Maintain applicable safety reference material on the job site.

d. Attend the pre-construction conference, pre-work meetings including preparatory inspection meeting, and periodic in-progress meetings.

e. Implement and enforce accepted APPS and AHAs.

f. Maintain a safety and health deficiency tracking system that monitors outstanding deficiencies until resolution. A list of unresolved safety and health deficiencies shall be posted on the safety bulletin board.

g. Ensure sub-contractor compliance with safety and health requirements.

Failure to perform the above duties will result in dismissal of the superintendent and/or SSHO, and a project work stoppage. The project work stoppage will remain in effect pending approval of a suitable replacement.

1.6.2.2 Certified Safety Professional (CSP)Certified Industrial Hygienist (CIH)

a. Perform safety and occupational health management, surveillance, inspections, and safety enforcement for the project.

b. Perform as the safety and occupational health "competent person" as defined by USACE EM 385-1-1.

c. Be on site at least monthlywhenever work or testing is being performed.

d. Conduct and document safety inspections.

e. Shall have no other duties other than safety and occupational health management, inspections, and enforcement on this contract.

1.6.3 Meetings

1.6.3.1 Preconstruction Conference

a. The Contractor will be informed, in writing, of the date of the preconstruction conference. The purpose of the preconstruction conference is for the Contractor and the Contracting Officer's representatives to become acquainted and explain the functions and operating procedures of their respective organizations and to reach mutual understanding relative to the administration of the overall project's APP before the initiation of work.

b. Contractor representatives who have a responsibility or significant role in accident prevention on the project shall attend the preconstruction conference. This includes the project superintendent, site safety and health officer, quality control supervisor, or any other assigned safety and health professionals who participated in the development of the APP (including the AHAs and special plans, program and procedures associated with it).

c. The Contractor shall discuss the details of the submitted APP to include incorporated plans, programs, procedures and a listing of anticipated activity hazard analyses (AHAs) that will be developed and implemented during the performance of the contract. This list of proposed AHAs will be reviewed at the conference and an agreement will be reached between the Contractor and the Contracting Officer's

representative as to which phases will require an analysis. In addition, a schedule for the preparation, submittal, review, and acceptance of AHAs shall be established to preclude project delays.

d. Deficiencies in the submitted APP will be brought to the attention of the Contractor at the preconstruction conference, and the Contractor shall revise the plan to correct deficiencies and re-submit it for acceptance. Work shall not begin until there is an accepted APP.

1.6.3.2 Weekly Safety Meetings

Conduct weekly safety meetings at the project site for all employees. The Contracting Officer will be informed of the meeting in advance and be allowed attendance. Minutes showing contract title, signatures of attendees and a list of topics discussed shall be attached to the Contractors' daily production report.

1.6.3.3 Work Phase Meetings

The appropriate AHA shall be reviewed and attendance documented by the Contractor at the preparatory, initial, and follow-up phases of quality control inspection. The analysis should be used during daily inspections to ensure the implementation and effectiveness of safety and health controls.

1.7 TRAINING

1.7.1 New Employee Indoctrination

New employees (prime and sub-contractor) will be informed of specific site hazards before they begin work. Documentation of this orientation shall be kept on file at the project site.

1.7.2 Periodic Training

Provide Safety and Health Training in accordance with USACE EM 385-1-1 and the accepted APP. Ensure all required training has been accomplished for all onsite employees.

1.7.3 Training on Activity Hazard Analysis (AHA)

Prior to beginning a new phase, training will be provided to all affected employees to include a review of the AHA to be implemented.

1.8 ACCIDENT PREVENTION PLAN (APP)

The Contractor shall use a qualified person to prepare the written site-specific APP. Prepare the APP in accordance with the format and requirements of USACE EM 385-1-1 and as supplemented herein. Cover all paragraph and subparagraph elements in USACE EM 385-1-1, Appendix A, "Minimum Basic Outline for Preparation of Accident Prevention Plan". Where a paragraph or subparagraph element is not applicable to the work to be performed indicate "Not Applicable" next to the heading. Specific requirements for some of the APP elements are described below at paragraph 1.8.1. The APP shall be job-specific and shall address any unusual or unique aspects of the project or activity for which it is written. The APP shall interface with the Contractor's overall safety and health program. Any portions of the Contractor's overall safety and health program referenced in the APP shall be included in the applicable APP element and made site-specific. The Government considers the Prime Contractor to be the

"controlling authority" for all work site safety and health of the subcontractors. Contractors are responsible for informing their subcontractors of the safety provisions under the terms of the contract and the penalties for noncompliance, coordinating the work to prevent one craft from interfering with or creating hazardous working conditions for other crafts, and inspecting subcontractor operations to ensure that accident prevention responsibilities are being carried out. The APP shall be signed by the person and firm (senior person) preparing the APP, the Contractor, the on-site superintendent, the designated site safety and health officer and any designated CSP and/or CIH.

Submit the APP to the Contracting Officer 15 calendar days prior to the date of the preconstruction conference for acceptance. Work cannot proceed without an accepted APP. The Contracting Officer reviews and comments on the Contractor's submitted APP and accepts it when it meets the requirements of the contract provisions.

Once accepted by the Contracting Officer, the APP and attachments will be enforced as part of the contract. Disregarding the provisions of this contract or the accepted APP will be cause for stopping of work, at the discretion of the Contracting Officer, until the matter has been rectified.

Once work begins, changes to the accepted APP shall be made with the knowledge and concurrence of the Contracting Officer, project superintendent, SSHO and quality control manager. Should any unforeseen hazard become evident during the performance of work, the project superintendent shall inform the Contracting Officer, both verbally and in writing, for resolution as soon as possible. In the interim, all necessary action shall be taken by the Contractor to restore and maintain safe working conditions in order to safeguard onsite personnel, visitors, the public, and the environment.

Copies of the accepted plan will be maintained at the Contracting Officer's office and at the job site.
The APP shall be continuously reviewed and amended, as necessary, throughout the life of the contract. Unusual or high-hazard activities not identified in the original APP shall be incorporated in the plan as they are discovered.

1.8.1 EM 385-1-1 Contents

In addition to the requirements outlines in Appendix A of USACE EM 385-1-1, the following is required:

a. Names and qualifications (resumes including education, training, experience and certifications) of all site safety and health personnel designated to perform work on this project to include the designated site safety and health officer and other competent and qualified personnel to be used such as CSPs, CIHs. The duties of each position shall be specified.

b. Qualifications of competent and of qualified persons. As a minimum, competent persons shall be designated and qualifications submitted for each of the following major areas: excavation; scaffolding; fall protection; hazardous energy; confined space; health hazard recognition, evaluation and control of chemical, physical and biological agents; personal protective equipment and clothing to include selection, use and maintenance.

c. Confined Space Entry Plan. Develop a confined space entry plan in accordance with USACE EM 385-1-1, applicable OSHA standards 29 CFR 1910, 29 CFR 1915, and 29 CFR 1926, and any other federal, state and local regulatory requirements identified in this contract. Identify the qualified person's name and qualifications, training, and experience. Delineate the qualified person's authority to direct work stoppage in the event of hazardous conditions. Include procedure for rescue by contractor personnel and the coordination with emergency responders. (If there is no confined space work, include a statement that no confined space work exists and none will be created.)

d. Health Hazard Control Program. The Contractor shall designate a competent and qualified person to establish and oversee a Health Hazard Control Program in accordance with USACE EM 385-1-1, Section 6. The program shall ensure that employees, on-site Government representatives, and others, are not adversely exposed to chemical, physical and biological agents and that necessary controls and protective actions are instituted to ensure health.

e. Crane Critical Lift Plan. Prepare and sign weight handling critical lift plans for lifts over 75 percent of crane hoist's maximum load limit; lifts involving more than one crane or hoist; lifts of personnel; and technically difficult lifts involving non-routine rigging or operation, sensitive equipment, or unusual safety risks in accordance with USACE EM 385-1-1, paragraph 16.c.18. and submit 15 calendar days prior to on-site work.

f. Alcohol and Drug Abuse Plan

(1) Describe plan for random checks and testing with pre-employment screening in accordance with the DFAR Clause subpart 252.223-7004, "Drug Free Work Force."

(2) Description of the on-site prevention program

g. Fall Protection and Prevention (FP&P) Plan. The plan shall be site specific and address all fall hazards in the work place and during different phases of construction. It shall address how to protect and prevent workers from falling to lower levels when they are exposed to fall hazards above 1.8 m (6 feet). A qualified person shall prepare and sign the plan. The plan shall include fall protection and prevention systems, equipment and methods employed for every phase of work, responsibilities, rescue and escape equipment and operations, training requirements, and monitoring methods. Fall Protection and Prevention Plan shall be revised every six months for lengthy projects, reflecting any changes during the course of construction due to changes in personnel, equipment, systems or work habits. The accepted Fall Protection and Prevention Plan shall be kept and maintained at the job site for the duration of the project.

h. Lead Abatement Plan. The safety and health aspects of lead-based paint removal, prepared in accordance with Section 13281A, Lead Hazard Control Activities.

i. Asbestos Hazard Abatement Plan. The safety and health aspects of asbestos work, prepared in accordance with Section 13280A, Asbestos Abatement.

j. Site Safety, Health and Emergency Response Plan. The safety and

health aspects prepared in accordance with Section 01351A.

k. Site Demolition Plan. The safety and health aspects prepared in accordance with Section 02220A, Demolition.

l. Training Records and Requirements. List of mandatory training and certifications which are applicable to this project (e.g. explosive actuated tools, confined space entry, fall protection, crane operation, vehicle operator, forklift operators, personal protective equipment); list of requirements for periodic retraining/certification; outline requirements for supervisory and employee safety meetings.

## 1.9 ACTIVITY HAZARD ANALYSIS (AHA)

The Activity Hazard Analysis (AHA) format shall be in accordance with USACE EM 385-1-1. Submit the AHA for review at least 15calendar days prior to the start of each phase. Format subsequent AHA as amendments to the APP. An AHA will be developed by the Contractor for every operation involving a type of work presenting hazards not experienced in previous project operations or where a new work crew or subcontractor is to perform work. The analysis must identify and evaluate hazards and outline the proposed methods and techniques for the safe completion of each phase of work. At a minimum, define activity being performed, sequence of work, specific safety and health hazards anticipated, control measures (to include personal protective equipment) to eliminate or reduce each hazard to acceptable levels, equipment to be used, inspection requirements, training requirements for all involved, and the competent person in charge of that phase of work. For work with fall hazards, including fall hazards associated with scaffold erection and removal, identify the appropriate fall arrest systems. For work with materials handling equipment, address safeguarding measures related to materials handling equipment. For work requiring excavations, include requirements for safeguarding excavations. An activity requiring an AHA shall not proceed until the AHA has been accepted by the Contracting Officer's representative and a meeting has been conducted by the Contractor to discuss its contents with everyone engaged in the activity, including on-site Government representatives. The Contractor shall document meeting attendance at the preparatory, initial, and follow-up phases of quality control inspection. The AHA shall be continuously reviewed and, when appropriate, modified to address changing site conditions or operations. The analysis should be used during daily inspections to ensure the implementation and effectiveness of the activity's safety and health controls.

The AHA list will be reviewed periodically (at least monthly) at the Contractor supervisory safety meeting and updated as necessary when procedures, scheduling, or hazards change.

Activity hazard analyses shall be updated as necessary to provide an effective response to changing work conditions and activities. The on-site superintendent, site safety and health officer and competent persons used to develop the AHAs, including updates, shall sign and date the AHAs before they are implemented.

## 1.10 DISPLAY OF SAFETY INFORMATION

Within 15 calendar days after commencement of work, erect a safety bulletin board at the job site. The following information shall be displayed on the safety bulletin board in clear view of the on-site construction personnel, maintained current, and protected against the elements and unauthorized

removal:

a. Map denoting the route to the nearest emergency care facility.

b. Emergency phone numbers.

c. Copy of the most up-to-date APP.

d. AHA(s).

e. OSHA 300A Form.

f. Confined space entry permit.

g. A sign indicating the number of hours worked since last lost workday accident.

h. OSHA Safety and Health Protection-On-The-Job Poster.

i. Safety and Health Warning Posters.

## 1.11 SITE SAFETY REFERENCE MATERIALS

Maintain safety-related references applicable to the project, including those listed in the article "References." Maintain applicable equipment manufacturer's manuals.

## 1.12 EMERGENCY MEDICAL TREATMENT

Contractors will arrange for their own emergency medical treatment. Government has no responsibility to provide emergency medical treatment.

## 1.13 REPORTS

### 1.13.1 Accident Reports

a. For recordable injuries and illnesses, and property damage accidents resulting in at least $2,000 in damages, the Prime Contractor shall conduct an accident investigation to establish the root cause(s) of the accident, complete the applicable report forms and provide the report to the Contracting Officer within 1 calendar day(s) of the accident. The Contracting Officer will provide copies of any required or special forms.

b. For a weight handling equipment accident the Prime Contractor shall conduct an accident investigation to establish the root cause(s) of the accident, complete the WHE Accident Report form and provide the report to the Contracting Officer within 30 calendar days of the accident. The Contracting Officer will provide a blank copy of the accident report form.

### 1.13.2 Accident Notification

Notify the Contracting Officer as soon as practical, but not later than four hours, after any accident meeting the definition of Recordable Injuries or Illnesses or High Visibility Accidents, property damage equal to or greater than $2,000, or any weight handling equipment accident involving a overturned crane, collapsed boom, or any other major damage to the crane or adjacent property. Information shall include contractor name;

contract title; type of contract; name of activity, installation or location where accident occurred; date and time of accident; names of personnel injured; extent of property damage, if any; extent of injury, if known, and brief description of accident (to include type of construction equipment used, PPE used, etc.). Preserve the conditions and evidence on the accident site until the Government investigation team arrives on site and Government investigation is conducted.

1.13.3 Regulatory Citations and Violations1.13.3 Regulatory Citations and Violations

Contact the Contracting Officer immediately of any OSHA or other regulatory agency inspection or visit, and provide the Contracting Officer with a copy of each citation, report, and contractor response. Correct violations and citations promptly and provide written corrective actions to the Contracting Officer.

1.13.4 Crane Reports

Submit crane inspection reports required in accordance with USACE EM 385-1-1, Appendix H and as specified herein with Daily Reports of Inspections.

1.13.5 Certificate of Compliance

The Contractor shall provide a Certificate of Compliance for each crane entering an activity under this contract (see Contracting Officer for a blank certificate). Certificate shall state that the crane and rigging gear meet applicable OSHA regulations (with the Contractor citing which OSHA regulations are applicable, e.g., cranes used in construction, demolition, or maintenance shall comply with 29 CFR 1926 and USACE EM 385-1-1 section 16 and Appendix H. Certify on the Certificate of Compliance that the crane operator(s) is qualified and trained in the operation of the crane to be used. The Contractor shall also certify that all of its crane operators working on the DOD activity have been trained in the proper use of all safety devices (e.g., anti-two block devices). These certifications shall be posted on the crane.

1.14 HOT WORK

Prior to performing "Hot Work" (welding, etc.) or operating other flame-producing devices, a written permit shall be requested from the Fire Division. CONTRACTORS ARE REQUIRED TO MEET ALL CRITERIA BEFORE A PERMIT IS ISSUED. The Contractor will provide at least two (2) twenty (20) pound 4A:20 BC rated extinguishers for normal "Hot Work". All extinguishers shall be current inspection tagged, approved safety pin and tamper resistant seal. It is also mandatory to have a designated FIRE WATCH for any "Hot Work" done at this activity.

a. Oil painting materials (paint, brushes, empty paint cans, etc.), and all flammable liquids shall be removed from the facility at quitting time. All painting materials and flammable liquids shall be stored outside in a suitable metal locker or box and will require re-submittal with non-hazardous materials.

b. Accumulation of trays, paper, shavings, sawdust, boxes and other packing materials shall be removed from the facility at the close of each workday and such material disposed of in the proper containers located away from the facility.

c. The storage of combustible supplies shall be a safe distance from

structures.

d. Area outside the facility undergoing work shall be cleaned of trash, paper, or other discarded combustibles at the close of each workday.

e. All portable electric devices (saws, sanders, compressors, extension chord, lights, etc.) shall be disconnected at the close of each workday. When possible, the main electric switch in the facility shall be deactivated.

f. When starting work in the facility, Contractors shall require their personnel to familiarize themselves with the location of the nearest fire alarm boxes and place in memory the emergency Fire Division phone number. ANY FIRE, NO MATTER HOW SMALL, SHALL BE REPORTED TO THE RESPONSIBLE FIRE DIVISION IMMEDIATELY.

g. Obtain services from a NFPA Certified Marine Chemist for "HOT WORK" within or around flammable materials (such as fuel systems, welding/cutting on fuel pipes) or confined spaces (such as sewer wet wells, manholes, vaults, etc.) that have the potential for flammable or explosive atmospheres.

## PART 2 PRODUCTS

### 2.1 FALL PROTECTION ANCHORAGE

Fall protection anchorage, conforming to ANSI Z359.1, will be left in place and so identified for continued customer use.

### 2.2 CONFINED SPACE SIGNAGE

The Contractor shall provide permanent signs integral to or securely attached to access covers for new permit-required confined spaces. Signs wording: "DANGER--PERMIT-REQUIRED CONFINED SPACE - DO NOT ENTER -" in bold letters a minimum of 25 mm(one inch) in height and constructed to be clearly legible with all paint removed. The signal word "DANGER" shall be red and readable from 1.52 m(5 feet).

## PART 3 EXECUTION

### 3.1 CONSTRUCTION AND/OR OTHER WORK

The Contractor shall comply with USACE EM 385-1-1, NFPA 241, the APP, the AHA, and other related submittals and activity fire and safety regulations.

#### 3.1.1 Hazardous Material Use

Each hazardous material must receive approval prior to being brought onto the job site or prior to any other use in connection with this contract. Allow a minimum of 10 working days for processing of the request for use of a hazardous material. Any work or storage involving hazardous chemicals or materials must be done in a manner that will not expose Government or Contractor employees to any unsafe or unhealthful conditions. Adequate protective measures must be taken to prevent Government or Contractor employees from being exposed to any hazardous condition that could result from the work or storage. The Prime Contractor shall keep a complete inventory of hazardous materials brought onto the work-site. Approval by the Contracting Officer of protective measures and storage area is required

prior to the start of the work.

3.1.2 Hazardous Material Exclusions

Notwithstanding any other hazardous material used in this contract, radioactive materials or instruments capable of producing ionizing/non-ionizing radiation (with the exception of radioactive material and devices used in accordance with EM 385-1-1 such as nuclear density meters for compaction testing and laboratory equipment with radioactive sources) as well as materials which contain asbestos, mercury or polychlorinated biphenyls, di-isocynates, lead-based paint are prohibited. The Contracting Officer, upon written request by the Contractor, may consider exceptions to the use of any of the above excluded materials.

3.1.3 Unforeseen Hazardous Material

The design should have identified materials such as PCB, lead paint, and friable and non-friable asbestos. If additional material, not indicated, that may be hazardous to human health upon disturbance during construction operations is encountered, stop that portion of work and notify the Contracting Officer immediately. Within 14 calendar days the Government will determine if the material is hazardous. If material is not hazardous or poses no danger, the Government will direct the Contractor to proceed without change. If material is hazardous and handling of the material is necessary to accomplish the work, the Government will issue a modification pursuant to "FAR 52.243-4, Changes" and "FAR 52.236-2, Differing Site Conditions."

3.2 PRE-OUTAGE COORDINATION MEETING

Contractors are required to apply for utility outages at least 15 days in advance. As a minimum, the request should include the location of the outage, utilities being affected, duration of outage and any necessary sketches. Special requirements for electrical outage requests are contained elsewhere in this specification section. Once approved, and prior to beginning work on the utility system requiring shut down, the Contractor shall attend a pre-outage coordination meeting with the Contracting Officer to review the scope of work and the lock-out/tag-out procedures for worker protection. No work will be performed on energized electrical circuits unless proof is provided that no other means exist.

3.3 FALL HAZARD PROTECTION AND PREVENTION

The Contractor shall establish a fall protection and prevention program, for the protection of all employees exposed to fall hazards. The program shall include company policy, identify responsibilities, education and training requirements, fall hazard identification, prevention and control measures, inspection, storage, care and maintenance of fall protection equipment and rescue and escape procedures.

3.3.1 Training

The Contractor shall institute a fall protection training program. As part of the Fall Hazard Protection and Prevention Program, the Contractor shall provide training for each employee who might be exposed to fall hazards. Training requirements shall be in accordance with USACE EM 385-1-1, section 21.A.16.

3.3.2 Fall Protection Equipment

The Contractor shall enforce use of the fall protection equipment designated for each specific work activity in the Fall Protection and Prevention Plan and/or AHA at all times when an employee is on a surface 1.8 m(6 feet) or more above lower levels. Fall protection systems such as guardrails, personnel fall arrest system, safety nets, etc., are required when working within 1.8m (6 feet) of any leading edge. In addition to the required fall protection systems, safety skiff, personal floatation devices, life rings etc., are required when working above or next to water in accordance with USACE EM 385-1-1, paragraphs 05.I. and 05.J. Personal fall arrest systems are required when working from an articulating or extendible boom, swing stages, or suspended platform. In addition, personal fall arrest systems may be required when operating other equipment such as scissor lifts if the work platform is capable of being positioned outside the wheelbase. Fall protection must comply with 29 CFR 1926.500, Subpart M and USACE EM 385-1-1.

3.3.2.1 Personal Fall Arrest Equipment

Personal fall arrest equipment, systems, subsystems, and components shall meet ANSI Z359.1. Only a full-body harness with a shock-absorbing lanyard or self-retracting lanyard is an acceptable personal fall arrest device. Body belts may only be used as a positioning device system (for uses such as steel reinforcing assembly and in addition to an approved fall arrest system). Harnesses shall have a fall arrest attachment affixed to the body support (usually a Dorsal D-ring) and specifically designated for attachment to the rest of the system. Only locking snap hooks and carabiners shall be used. Webbing, straps, and ropes shall be made of synthetic fiber. The maximum free fall distance when using fall arrest equipment shall not exceed 1.8 m (6 feet). The total fall distance shall always be taken into consideration when attaching a person to a fall arrest system.

3.3.3 Fall Protection for Roofing Work

Fall protection controls shall be implemented based on the type of roof being constructed and work being performed. The roof area to be accessed shall be evaluated for its structural integrity including weight-bearing capabilities for the projected loading.

a. Low Sloped Roofs:

(1) For work within 1.8 m (6 feet) of an edge, on low-slope roofs, personnel shall be protected from falling by use of personal fall arrest systems, guardrails, or safety nets. A safety monitoring system is not adequate fall protection and is not authorized.

(2) For work greater than 1.8 m (6 feet) from an edge, warning lines shall be erected and installed in accordance with 29 CFR 1926.500 and USACE EM 385-1-1.

b. Steep Roofs: Work on steep roofs requires a personal fall arrest system, guardrails with toe-boards, or safety nets. This requirement also includes residential or housing type construction.

3.3.4 Safety Nets

If safety nets are used as the selected fall protection system on the project, they shall be provided at unguarded workplaces, over water, machinery, dangerous operations and leading edge work. Safety nets shall be tested immediately after installation with a drop test of 181.4 kg (400 pounds) and every six months thereafter.

3.3.5 Existing Anchorage

Existing anchorages, to be used for attachment of personal fall arrest equipment, shall be certified (or re-certified) by a qualified person in accordance with ANSI Z359.1.

3.3.6 Horizontal Lifelines

Horizontal lifelines shall be designed, installed, certified and used under the supervision of a qualified person as part of a complete fall arrest system (29 CFR 1926.500).

3.4 SCAFFOLDING

Employees shall be provided with a safe means of access to the work area on the scaffold. Climbing of any scaffold braces or supports not specifically designed for access is prohibited. Access to scaffold platforms greater than 6 m (20 feet) in height shall be accessed by use of a scaffold stair system. Vertical ladders commonly provided by scaffold system manufacturers shall not be used for accessing scaffold platforms greater than 6 m (20 feet) in height. The use of an adequate gate is required. Contractor shall ensure that employees are qualified to perform scaffold erection and dismantling. Do not use scaffold without the capability of supporting at least four times the maximum intended load or without appropriate fall protection as delineated in the accepted fall protection and prevention plan. Stationary scaffolds must be attached to structural building components to safeguard against tipping forward or backward. Special care shall be given to ensure scaffold systems are not overloaded. Side brackets used to extend scaffold platforms on self-supported scaffold systems for the storage of material is prohibited. The first tie-in shall be at the height equal to 4 times the width of the smallest dimension of the scaffold base. Work platforms shall be placed on mud sills. Scaffold or work platform erectors shall have fall protection during the erection and dismantling of scaffolding or work platforms that are more than six feet. Delineate fall protection requirements when working above six feet or above dangerous operations in the Fall Protection and Prevention (FP&P) Plan and Activity Hazard Analysis (AHA) for the phase of work.

3.5 EQUIPMENT

3.5.1 Material Handling Equipment

a. Material handling equipment such as forklifts shall not be modified with work platform attachments for supporting employees unless specifically delineated in the manufacturer's printed operating instructions.

b. The use of hooks on equipment for lifting of material must be in accordance with manufacturer's printed instructions.

c. Operators of forklifts or power industrial trucks shall be

licensed in accordance with OSHA.

3.5.2 Weight Handling Equipment

a. Cranes must be equipped with:

(1) Load indicating devices (LIDs) and a boom angle or radius indicator,

(2) or load moment indicating devices (LMIs).

(3) Anti-two block prevention devices.

(4) Boom hoist hydraulic relief valve, disconnect, or shutoff (stops hoist when boom reaches a predetermined high angle).

(5) Boom length indicator (for telescoping booms).

(6) Device to prevent uncontrolled lowering of a telescoping hydraulic boom.

(7) Device to prevent uncontrolled retraction of a telescoping hydraulic boom.

b. The Contractor shall notify the Contracting Officer 15 days in advance of any cranes entering the activity so that necessary quality assurance spot checks can be coordinated. Contractor's operator shall remain with the crane during the spot check.

c. The Contractor shall comply with the crane manufacturer's specifications and limitations for erection and operation of cranes and hoists used in support of the work. Erection shall be performed under the supervision of a designated person (as defined in ASME B30.5). All testing shall be performed in accordance with the manufacturer's recommended procedures.

d. The Contractor shall comply with ASME B30.5 for mobile and locomotive cranes, ASME B30.22 for articulating boom cranes and ASME B30.8 for floating cranes and floating derricks.

e. The presence of Government personnel does not relieve the Contractor of an obligation to comply with all applicable safety regulations. The Government will investigate all complaints of unsafe or unhealthful working conditions received in writing from contractor employees, federal civilian employees, or military personnel.

f. Each load shall be rigged/attached independently to the hook/master-link in such a fashion that the load cannot slide or otherwise become detached. Christmas-tree lifting (multiple rigged materials) is not allowed.

g. Under no circumstance shall a Contractor make a lift at or above 90% of the cranes rated capacity in any configuration.

h. When operating in the vicinity of overhead transmission lines, operators and riggers shall be alert to this special hazard and shall follow the requirements of USACE EM 385-1-1 section 11 and ASME B30.5 or ASME B30.22 as applicable.

i. Crane suspended personnel work platforms (baskets) shall not be used unless the Contractor proves that using any other access to the work location would provide a greater hazard to the workers or is impossible. Personnel shall not be lifted with a line hoist or friction crane.

j. A fire extinguisher having a minimum rating of 10BC and a minimum nominal capacity of 5lb of extinguishing agent shall be available at all operator stations or crane cabs. Portable fire extinguishers shall be inspected, maintained, and recharged as specified in NFPA 10, Standard for Portable Fire Extinguishers.

k. All employees shall be kept clear of loads about to be lifted and of suspended loads.

l. A weight handling equipment operator shall not leave his position at the controls while a load is suspended.

m. Only Contractor crane operators who have met the requirements of 29 CFR 1910.94, 29 CFR 1910.120, 29 CFR 1926.65, 29 CFR 1926.500, USACE EM 385-1-1, ASME B30.5, and ASME B30.22 and other local and state requirements shall be authorized to operate the crane.

n. The Contractor shall use cribbing when performing lifts on outriggers.

o. The crane hook/block must be positioned directly over the load. Side loading of the crane is prohibited.

p. A physical barricade must be positioned to prevent personnel from entering the counterweight swing (tail swing) area of the crane.

q. A substantial and durable rating chart containing legible letters and figures shall be provided with each crane and securely mounted onto the crane cab in a location allowing easy reading by the operator while seated in the control station.

r. Certification records which include the date of inspection, signature of the person performing the inspection, and the serial number or other identifier of the crane that was inspected shall always be available for review by Contracting Officer personnel.

s. Written reports listing the load test procedures used along with any repairs or alterations performed on the crane shall be available for review by Contracting Officer personnel.

t. The Contractor shall certify that all crane operators have been trained in proper use of all safety devices (e.g. anti-two block devices).

3.5.3 Equipment and Mechanized Equipment

a. Equipment shall be operated by designated qualified operators. Proof of qualifications shall be kept on the project site for review.

b. Manufacture specifications or owner's manual for the equipment shall be on site and reviewed for additional safety precautions or requirements that are sometimes not identified by OSHA or USACE EM 385-1-1. Such additional safety precautions or requirements shall be

incorporated into the AHAs.

c. Equipment and mechanized equipment shall be inspected in accordance with manufacturer's recommendations for safe operation by a competent person prior to being placed into use.

d. Daily checks or tests shall be conducted and documented on equipment and mechanized equipment by designated competent persons.

## 3.6 EXCAVATIONS

The competent person for excavations performed as a result of contract work shall be on-site when excavation work is being performed, and shall inspect, and document the excavations daily prior to entry by workers. The competent person must evaluate all hazards, including atmospheric, that may be associated with the work, and shall have the resources necessary to correct hazards promptly.

### 3.6.1 Utility Locations

Prior to digging, the appropriate digging permit must be obtained. All underground utilities in the work area must be positively identified by a private utility locating service in addition to any station locating service and coordinated with the station utility department. Any markings made during the utility investigation must be maintained throughout the contract.

### 3.6.2 Utility Location Verification

The Contractor must physically verify underground utility locations by hand digging using wood or fiberglass handled tools when any adjacent construction work is expected to come within three feet of the underground system. Digging within .061 m (2 feet) of a known utility must not be performed by means of mechanical equipment; hand digging shall be used. If construction is parallel to an existing utility the utility shall be exposed by hand digging every 30.5 m (100 feet) if parallel within 1.5 m (5 feet) of the excavation.

### 3.6.3 Utilities with Concrete Slabs

Utilities located within concrete slabs or pier decks, bridges, and the like are extremely difficult to identify. The location must be coordinated with station utility departments in addition to a private locating service. Outages on system utilities shall be used in circumstances where concrete chipping, saw cutting, or core drilling is required and utilities are unable to be completely identified.

### 3.6.4 Shoring Systems

Trench and shoring systems must be identified in the accepted safety plan and AHA. Manufacture tabulated data and specifications or registered engineer tabulated data for shoring or benching systems shall be readily available on site for review. Job-made shoring or shielding shall have the registered professional engineer stamp, specifications, and tabulated data. Extreme care must be used when excavating near direct burial electric underground cables.

### 3.6.5 Trenching Machinery

Trenching machines with digging chain drives shall be operated only when the spotters/laborers are in plain view of the operator. Operator and spotters/laborers shall be provided training on the hazards of the digging chain drives with emphasis on the distance that needs to be maintained when the digging chain is operating. Documentation of the training shall be kept on file at the project site.

## 3.7 ELECTRICAL

### 3.7.1 Conduct of Electrical Work

Underground electrical spaces must be certified safe for entry before entering to conduct work. Cables that will be cut must be positively identified and de-energized prior to performing each cut. Positive cable identification must be made prior to submitting any outage request for electrical systems. Arrangements are to be coordinated with the Contracting Officer and Station Utilities for identification. The Contracting Officer will not accept an outage request until the Contractor satisfactorily documents that the circuits have been clearly identified. Perform all high voltage cable cutting remotely using hydraulic cutting tool. When racking in or live switching of circuit breakers, no additional person other than the switch operator will be allowed in the space during the actual operation. Plan so that work near energized parts is minimized to the fullest extent possible. Use of electrical outages clear of any energized electrical sources is the preferred method. When working in energized substations, only qualified electrical workers shall be permitted to enter. When work requires Contractor to work near energized circuits as defined by the NFPA 70, high voltage personnel must use personal protective equipment that includes, as a minimum, electrical hard hat, safety shoes, insulating gloves with leather protective sleeves, fire retarding shirts, coveralls, face shields, and safety glasses. Insulating blankets, hearing protection, and switching suits may be required, depending on the specific job and as delineated in the Contractor's AHA.

### 3.7.2 Portable Extension Cords

Portable extension cords shall be sized in accordance with manufacturer ratings for the tool to be powered and protected from damage. All damaged extension cords shall be immediately removed from service. Portable extension cords shall meet the requirements of NFPA 70.

## 3.8 WORK IN CONFINED SPACES

The Contractor shall comply with the requirements in Section 06.I of USACE EM 385-1-1 and OSHA 29 CFR 1910.146. Any potential for a hazard in the confined space requires a permit system to be used.

a. Entry Procedures. Prohibit entry into a confined space by personnel for any purpose, including hot work, until the qualified person has conducted appropriate tests to ensure the confined or enclosed space is safe for the work intended and that all potential hazards are controlled or eliminated and documented. (See Section 06.I.05 of USACE EM 385-1-1 for entry procedures.) All hazards pertaining to the space shall be reviewed with each employee during review of the AHA.

b. Forced air ventilation is required for all confined space entry

operations and the minimum air exchange requirements must be maintained to ensure exposure to any hazardous atmosphere is kept below its' action level.

c. Ensure the use of rescue and retrieval devices in confined spaces greater than 1.5 m (5 feet) in depth. Conform to Sections 06.I.09, 06.I.10 and 06.I.11 of USACE EM 385-1-1.

d. Sewer wet wells require continuous atmosphere monitoring with audible alarm for toxic gas detection.

e. Include training information for employees who will be involved as entrants and attendants for the work. Conform to Section 06.I.06 of USACE EM 385-1-1.

f. Daily Entry Permit. Post the permit in a conspicuous place close to the confined space entrance.

## 3.9 CRYSTALLINE SILICA

Grinding, abrasive blasting, and foundry operations of construction materials containing crystalline silica, shall comply with OSHA regulations, such as 29 CFR 1910.94, and USACE EM 385-1-1, Appendix C. The Contractor shall develop and implement effective exposure control and elimination procedures to include dust control systems, engineering controls, and establishment of work area boundaries, as well as medical surveillance, training, air monitoring, and personal protective equipment.

## 3.10 HOUSEKEEPING

### 3.10.1 Clean-Up

All debris in work areas shall be cleaned up daily or more frequently if necessary. Construction debris may be temporarily located in an approved location, however garbage accumulation must be removed each day.

### 3.10.2 Dust Control

In addition to the dust control measures required elsewhere in the contract documents, dry cutting of brick or masonry shall be prohibited. The Contracting Officer, upon written request by the Contractor, may consider exceptions to this prohibition on a case-by-case basis. Wet cutting must address control of water run off.

-- End of Section --

SECTION TABLE OF CONTENTS

DIVISION 01 - GENERAL REQUIREMENTS

SECTION 01572

CONSTRUCTION AND DEMOLITION WASTE MANAGEMENT

**03/04**

PART 1 GENERAL

1.1 GOVERNMENT POLICY
1.2 MANAGEMENT
1.3 PLAN
1.4 RECORDS
1.5 COLLECTION
1.5.1 Source Separated Method.
1.5.2 Co-Mingled Method.
1.5.3 Other Methods.
1.6 DISPOSAL
1.6.1 Reuse.
1.6.2 Recycle.
1.6.3 Waste.

-- End of Section Table of Contents --

SECTION 01572

CONSTRUCTION AND DEMOLITION WASTE MANAGEMENT
**03/04**

PART 1 GENERAL

1.1 GOVERNMENT POLICY

Government policy is to apply sound environmental principles in the design, construction and use of facilities. As part of the implementation of that policy the Contractor shall: (1) practice efficient waste management when sizing, cutting, and installing products and materials and (2) use all reasonable means to divert construction and demolition waste from landfills and incinerators and to facilitate their recycling or reuse.

1.2 MANAGEMENT

The Contractor shall take a pro-active, responsible role in the management of construction and demolition waste and require all subcontractors, vendors, and suppliers to participate in the effort. Construction and demolition waste includes products of demolition or removal, excess or unusable construction materials, packaging materials for construction products, and other materials generated during the construction process but not incorporated into the work. In the management of waste consideration shall be given to the availability of viable markets, the condition of the material, the ability to provide the material in suitable condition and in a quantity acceptable to available markets, and time constraints imposed by internal project completion mandates. The Contractor shall be responsible for implementation of any special programs involving rebates or similar incentives related to recycling of waste. Revenues or other savings obtained for salvage, or recycling shall accrue to the Contractor. Firms and facilities used for recycling, reuse, and disposal shall be appropriately permitted for the intended use to the extent required by federal, state, and local regulations.

1.3 PLAN

A waste management plan shall be submitted within 15 days after contract award and prior to initiating any site preparation work. The plan shall include the following:

a. Name of individuals on the Contractor's staff responsible for waste prevention and management.

b. Actions that will be taken to reduce solid waste generation.

c. Description of the specific approaches to be used in recycling/reuse of the various materials generated, including the areas and equipment to be used for processing, sorting, and temporary storage of wastes.

d. Characterization, including estimated types and quantities, of the waste to be generated.

e. Name of landfill and/or incinerator to be used and the estimated

costs for use, assuming that there would be no salvage or recycling on the project.

f. Identification of local and regional reuse programs, including non-profit organizations such as schools, local housing agencies, and organizations that accept used materials such as materials exchange networks and Habitat for Humanity.

g. List of specific waste materials that will be salvaged for resale, salvaged and reused, or recycled. Recycling facilities that will be used shall be identified.

h. Identification of materials that cannot be recycled/reused with an explanation or justification.

i. Anticipated net cost savings determined by subtracting Contractor program management costs and the cost of disposal from the revenue generated by sale of the materials and the incineration and/or landfill cost avoidance.

## 1.4 RECORDS

Records shall be maintained to document the quantity of waste generated; the quantity of waste diverted through sale, reuse, or recycling; and the quantity of waste disposed by landfill or incineration. The records shall be made available to the Contracting Officer during construction, and a copy of the records shall be delivered to the Contracting Officer upon completion of the construction.

## 1.5 COLLECTION

The necessary containers, bins and storage areas to facilitate effective waste management shall be provided and shall be clearly and appropriately identified. Recyclable materials shall be handled to prevent contamination of materials from incompatible products and materials and separated by one of the following methods:

### 1.5.1 Source Separated Method.

Waste products and materials that are recyclable shall be separated from trash and sorted into appropriately marked separate containers and then transported to the respective recycling facility for further processing.

### 1.5.2 Co-Mingled Method.

Waste products and recyclable materials shall be placed into a single container and then transported to a recycling facility where the recyclable materials are sorted and processed.

### 1.5.3 Other Methods.

Other methods proposed by the Contractor may be used when approved by the Contracting Officer.

## 1.6 DISPOSAL

Except as otherwise specified in other sections of the specifications, disposal shall be in accordance with the following:

1.6.1 Reuse.

First consideration shall be given to salvage for reuse since little or no re-processing is necessary for this method, and less pollution is created when items are reused in their original form. Sale or donation of waste suitable for reuse shall be considered. Salvaged materials, other than those specified in other sections to be salvaged and reinstalled, shall not be used in this project.

1.6.2 Recycle.

Waste materials not suitable for reuse, but having value as being recyclable, shall be made available for recycling whenever economically feasible.

1.6.3 Waste.

Materials with no practical use or economic benefit shall be disposed at a landfill or incinerator.

-- End of Section --

SECTION TABLE OF CONTENTS

DIVISION 01 - GENERAL REQUIREMENTS

SECTION 01670

RECYCLED / RECOVERED MATERIALS

**03/04**

PART 1 GENERAL

1.1 OBJECTIVES
1.2 EPA DESIGNATED ITEMS INCORPORATED IN THE WORK
1.3 EPA PROPOSED ITEMS INCORPORATED IN THE WORK
1.4 EPA LISTED ITEMS USED IN CONDUCT OF THE WORK BUT NOT INCORPORATED IN THE WORK

-- End of Section Table of Contents --

SECTION 01670

RECYCLED / RECOVERED MATERIALS

**03/04**

PART 1 GENERAL

1.1 OBJECTIVES

Government procurement policy is to acquire, in a cost effective manner, items containing the highest percentage of recycled and recovered materials practicable consistent with maintaining a satisfactory level of competition without adversely affecting performance requirements or exposing suppliers' employees to undue hazards from the recovered materials. The Environmental Protection Agency (EPA) has designated certain items which must contain a specified percent range of recovered or recycled materials. EPA designated products specified in this contract comply with the stated policy and with the EPA guidelines. The Contractor shall make all reasonable efforts to use recycled and recovered materials in providing the EPA designated products and in otherwise utilizing recycled and recovered materials in the execution of the work.

1.2 EPA DESIGNATED ITEMS INCORPORATED IN THE WORK

Various sections of the specifications contain requirements for materials that have been designated by EPA as being products which are or can be made with recovered or recycled materials. These items, when incorporated into the work under this contract, shall contain at least the specified percentage of recycled or recovered materials unless adequate justification (non-availability) for non-use is provided. When a designated item is specified as an option to a non-designated item, the designated item requirements apply only if the designated item is used in the work.

1.3 EPA PROPOSED ITEMS INCORPORATED IN THE WORK

The items listed in Table 1 have been identified by EPA as being products which are proposed as possible designated items at some time in the future. It is recommended that these items, when incorporated in the work under this contract, contain the highest practicable percentage of recycled or recovered materials providing specified requirements are also met.

**TABLE 1 EPA PROPOSED ITEMS**

| PRODUCT | MATERIAL | POSTCONSUMER CONTENT (%) | RECOVERED MATERIALS CONTENT (%) |
|---|---|---|---|
| Carpet Backing | -- | | |
| Carpet Cushion | -- | | |
| Flowable Fill | -- | | |
| Railroad Grade Crossings/Surfaces | -- | | |
| Landscaping Timbers & Posts | Plastic | | |
| Park and Recreational | | | |

| PRODUCT | MATERIAL | POSTCONSUMER CONTENT (%) | RECOVERED MATERIALS CONTENT (%) |
|---|---|---|---|
| Furniture | -- | | |
| Playground Equipment | -- | | |
| Parking Stops | Plastic or Rubber | 100 | |
| | Fly Ash (concrete) | -- | 20-40 |
| | Slag (concrete) | -- | 25-70 |
| Signage | -- | | |

1.4 EPA LISTED ITEMS USED IN CONDUCT OF THE WORK BUT NOT INCORPORATED IN THE WORK

There are many products listed in 40 CFR 247 which have been designated or proposed by EPA to include recycled or recovered materials that may be used by the Contractor in performing the work but will not be incorporated into the work. These products include office products, temporary traffic control products, and pallets. It is recommended that these non-construction products, when used in the conduct of the work, contain the highest practicable percentage of recycled or recovered materials.

**EPA DESIGNATED ITEMS**

| PRODUCT | MATERIAL | POSTCONSUMER CONTENT (%) | RECOVERED MATERIALS CONTENT (%) |
|---|---|---|---|
| **BUILDING INSULATION** | | | |
| Rock Wool | Slag | -- | 75 |
| Fiberglass | Glass Cullet | -- | 20-25 |
| Cellulose Loose-Fill and Spray-On | Postconsumer Paper | 75 | 75 |
| Perlite Composite Board | Postconsumer Paper | 23 | 23 |
| Plastic Rigid Foam, Polyisocyanurate/ Polyurethane: | | | |
| Rigid Foam | -- | -- | 9 |
| Foam-in-Place | -- | -- | 5 |
| Glass Fiber Reinforced | -- | -- | 6 |
| Phenolic Rigid Foam | -- | -- | 5 |
| Plastic, Non-Woven Batt | Recovered or Postconsumer Plastics | -- | 100 |

**NOTES:** 1. Recovered materials content levels are based on the weight (not volume) of materials in the insulation core only.

2. Glass cullet in fiberglass insulation shall conform to ASTM D5359.

---

| PRODUCT | MATERIAL | POSTCONSUMER CONTENT (%) | RECOVERED MATERIALS CONTENT (%) |
|---|---|---|---|
| **CARPET** | | | |
| Polyester Carpet Face Fiber | PET | 25-100 | 25-100 |

NOTES: 1. PET is recovered soda bottles.

---

| PRODUCT | MATERIAL | POSTCONSUMER CONTENT (%) | RECOVERED MATERIALS CONTENT (%) |
|---|---|---|---|
| **CEMENT AND CONCRETE** | | | |
| Concrete | Coal Fly Ash | -- | *As Specified |
| | Blast Furnace Slag | -- | *As Specified |

* Content depends upon the design - See Section 03300

| PRODUCT | MATERIAL | POSTCONSUMER CONTENT (%) | RECOVERED MATERIALS CONTENT (%) |
|---|---|---|---|
| **REPROCESSED AND CONSOLIDATED LATEX PAINTS** | | | |
| Reprocessed Latex Paint | | | |
| White, off-white Pastel Colors | | 20 | 20 |
| Grey, brown, earthtones and other dark colors | | 50-99 | 50-99 |
| Consolidated Latex Paint | | 100 | 100 |

NOTE: Percentages apply to reprocessed latex paints used for interior and exterior architectural applications such as wallboard, ceilings, and trim; gutter boards; and concrete, stucco, masonry, wood, and metal surfaces. Percentages apply to consolidated latex paints used for covering graffiti, where color and consistency of performance are not primary concerns.

| PRODUCT | MATERIAL | POSTCONSUMER CONTENT (%) | RECOVERED MATERIALS CONTENT (%) |
|---|---|---|---|
| **FLOOR TILES AND PATIO BLOCKS** | | | |
| Floor tiles (heavy duty/commercial use) | Rubber | 90-100 | |
| | Plastic | | 90-100 |
| Patio Blocks | Rubber or Rubber blends | 90-100 | |
| | Plastic or Plastic Blends | | 90-100 |

NOTES: 1. Content levels are based on the dry weight of the raw materials, exclusive of any additives such as adhesives, binders, or coloring agents.

2. The use of floor tiles with recovered materials content might be appropriate only for specialty purpose uses (e.g., raised, open-web files for drainage on school kitchen flooring).

| PRODUCT | MATERIAL | POSTCONSUMER CONTENT (%) | RECOVERED MATERIALS CONTENT (%) |
|---|---|---|---|
| **TOILET DIVIDERS AND PARTITIONS** | | | |
| Toilet dividers and partitions | Steel | 16 | 20-30 |
| | Plastic | 20-100 | 20-100 |

| PRODUCT | MATERIAL | POSTCONSUMER CONTENT (%) | RECOVERED MATERIALS CONTENT (%) |
|---|---|---|---|
| **FIBERBOARD / PAPERBOARD** | | | |
| Structural fiberboard | | | 80-100 |
| Paminated paperboard | Post Consumer paper | 100 | 100 |

NOTES: 1. Content levels are based on the weight (not voluevolume) of materials in the insulating core only.
2. Structural fiberboard containing recovered paper shall conform to ASTM C 208.

| PRODUCT | MATERIAL | POSTCONSUMER CONTENT (%) | RECOVERED MATERIALS CONTENT (%) |
|---|---|---|---|
| **HYDRAULIC MULCH** | | | |
| Paper based hydr. mulch | Paper | 100 | 100 |
| Wood based hydr. mulch | Wood and Paper | | 100 |

NOTE: Content levels are based on the dry weight of the fiber, exclusive of any dyes, wetting agents, seeds, fertilizer, or other non-cellulose additives.

| PRODUCT | MATERIAL | POSTCONSUMER CONTENT (%) | RECOVERED MATERIALS CONTENT (%) |
|---|---|---|---|
| **LAWN & GARDEN EDGING** | | | |
| Lawn and garden edging | Plastic and/or rubber | 30-100 | 30-100 |

| PRODUCT | MATERIAL | POSTCONSUMER CONTENT (%) | RECOVERED MATERIALS CONTENT (%) |
|---|---|---|---|
| **PLASTIC FENCING** | | | |
| Plastic fencing | Plastic | 60-100 | 90-100 |

NOTE: Designation includes fencing for use in controlling snow or sand drifting and as a warning/safety barrier in construction or other applications.

| PRODUCT | MATERIAL | POSTCONSUMER CONTENT (%) | RECOVERED MATERIALS CONTENT (%) |
|---|---|---|---|
| **PLAYGROUND / RUNNING TRACK SURFACING** | | | |
| Playground/Running Track Surfacing | Rubber or Plastic | 90-100 | |

NOTE: 1. Content levels are based on the dry weight of the raw materials, exclusive of any additives such as adhesives, binders, or coloring agents.
2. Playground surfaces shall conform to the requiremets of ASTM F 1292.
3. Playground surfacing shall comply with the Americans with Disabilites Disabilities Act.

**********

-- End of Section --

SECTION TABLE OF CONTENTS

DIVISION 01 - GENERAL REQUIREMENTS

SECTION 01730

OPERATION AND MAINTENANCE SUPPORT INFORMATION (OMSI)

**12/98**

PART 1 GENERAL

1.1 SUBMITTALS
1.1.1 OMSI Submittal Requirements

PART 2 PRODUCTS

2.1 DEVELOPMENT OF SUBMITTALS
2.2 IDENTIFICATION

PART 3 EXECUTION

3.1 OPERATING INSTRUCTIONS
3.1.1 Safety
3.1.2 Operator Prestart
3.1.3 Starting and Shutdown Procedures and Controls
3.1.4 Normal Operating Instructions
3.1.5 Emergency Operating Procedures
3.1.6 Operator Service Requirements
3.1.7 Instruction to Government Personnel
3.2 MAINTENANCE, SERVICE AND REPAIR INSTRUCTIONS
3.2.1 Lubrication Instructions
3.2.2 Table of Preventative Maintenance Instructions
3.2.3 Preventative Maintenance Inspection
3.2.4 Troubleshooting Guides and Diagnostic Techniques
3.2.5 Removal and Preplacement Instructions
3.2.6 Maintenance and Repair Procedure
3.3 PARTS MANUAL
3.3.1 Contents
3.3.2 Illustrations, Drawings, and/or Exploded Views
3.3.3 End Item Manufacturer's Part Numbers
3.3.4 Components Assemblies/Parts
3.3.5 Appendices
3.4 VALIDATION
3.5 SPECIFIC EQUIPMENT SUBMITTALS
3.5.1 Pressure Gages
3.5.2 Automatic Pump Controls
3.5.3 Meters
3.5.4 Product Recovery Tank and Accessories
3.5.5 Hydrant Outlet Pits, Isolation Valve Pits, High Point Vent and Low Point Drain Pits
3.5.6 Operating Tank Level Indicator
3.5.7 Loading Arms
3.5.8 Piping and Fittings
3.5.9 Manual Valves
3.5.10 Gaskets and Isolating Gasket Kits

3.5.11 Strainers
3.5.12 Protective Coatings
3.5.13 Sample Connections
3.5.14 Filter Separators
3.5.15 Water Draw-Off System
3.5.16 Pumps - Fueling, Fuel Transfer, Product Return
3.5.17 Flexible Hoses
3.5.18 Control Valves
3.5.19 Engine-Generator
3.5.20 Fire Alarm and Fire Detecting System
3.5.21 Motor Control Center
3.5.22 Non-Automatic Transfer Switch
3.5.23 Pump Control Panel (PCP)

-- End of Section Table of Contents --

SECTION 01730

OPERATION AND MAINTENANCE SUPPORT INFORMATION (OMSI)
**12/98**

PART 1 GENERAL

1.1 SUBMITTALS

1.1.1 OMSI Submittal Requirements

OMSI submittals are required in order that complete documentation can be assembled to provide the Government "Activity" with the necessary information and orientation to adequately operate and maintain the new structures/facilities of this project. The Contractor shall submit the OMSI documents and information specified for the equipment listed under the OMSI submittal paragraphs in each technical section. Five (5) copies of each OMSI submittal shall be forwarded to the Contracting Officer no later than 120-days prior to contract completion. OMSI submittals are to be submitted separate from and in addition to Contractor's product approval submittals.

SD-10 Operation and Maintenance Data

Manuals; G-AE

PART 2 PRODUCTS

2.1 DEVELOPMENT OF SUBMITTALS

Provide submittals in separate folders consistent with the Contractor's standard practice. Manufacturer's manuals or data for the components, assemblies, subassemblies, and other operating parts which are provided shall be assembled into a loose-leaf notebook-type folder, indexed by major assembly and component in sequential order. Manuals shall be complete in all respects for all equipment, controls, and accessories provided.

2.2 IDENTIFICATION

On each folder identify and mark as follows:

a. Inscribe on the cover, the words, "OPERATION AND MAINTENANCE MANUAL", the name and location of the building, and the contract number.

b. Equipment manufacturer and/or Contractor' s address and telephone number; names, address and telephone numbers of each subcontractor installing equipment; and local representative for each item of equipment.

c. Volume number and title of the folder.

d. The manual shall have a table of contents and be assembled to conform to the table of contents with the tab sheets placed before instructions covering the subject. Sub-divide manuals or provide separate manuals for each of the following categories.

(1) Operating Instructions
(2) Maintenance, Service, and Repair Instructions
(3) Parts Manual

PART 3 EXECUTION

3.1 OPERATING INSTRUCTIONS

The operator's instructions shall include specific instructions and illustrations of the equipment operation required or recommended by the manufacturer as follows:

3.1.1 Safety

Include manufacturer's safety precautions to be observed while operating under all conditions for which the equipment was designed. Clearly list all major hazards to personnel and equipment safety that are peculiar to systems and equipment described in the manual.

3.1.2 Operator Prestart

Include instructions for prestart checks, lubrication, and service requirements necessary for setting up or preparing each system for use, warm up procedures, and verification of normal operation. Include control diagrams with data to explain detailed operation and control of each item of the equipment.

3.1.3 Starting and Shutdown Procedures and Controls

Include a control sequence describing start up operation and provide shutdown procedures and post-shutdown requirements.

3.1.4 Normal Operating Instructions

Instructions shall be sufficient to enable the mechanic to adjust, stop and start, and operate the equipment properly. Special startup precautions shall be noted, as well as other items requiring action before the equipment may be put into service. Include detailed drawings indicating procedure and valve numbers and status as to normally open/closed.

3.1.5 Emergency Operating Procedures

Include action to be taken in the event of a malfunction of the unit, either to permit a short period of continued operation or to prevent further damage to the unit and to the system in which it is installed.

3.1.6 Operator Service Requirements

Include instructions for operator service requirements during operation of the equipment.

3.1.7 Instruction to Government Personnel

The Contractor shall furnish the services of competent instructors who will give full instruction to the designated personnel in the adjustment, operation and maintenance, including pertinent safety requirements, of the equipment or system specified. Each instructor shall be thoroughly familiar with all parts of the installation and shall be trained in operating theory as well as practical operation and maintenance work.

Instruction shall be given during the first regular work week after the equipment or system has been accepted and turned over to the Government for regular operation. A minimum of 1 man-day (8-hours) of instruction shall be furnished for each system specified in other sections. When more than 4 man-days of instruction are specified, approximately half of the time shall be used for classroom instruction. All other time shall be used for instruction with the equipment or system. When significant changes or modifications in the equipment or system are made under the terms of the contract, additional instruction shall be provided to acquaint the operating personnel with the changes or modifications. Government representatives shall be allowed to video tape all classroom and field instructions.

## 3.2 MAINTENANCE, SERVICE AND REPAIR INSTRUCTIONS

The shop or maintenance manual shall include manufacturer's instructions to maintain the equipment in a safe and serviceable condition. The maintenance or shop manual shall contain all necessary instructions, illustrations, charges and diagrams covering, as a minimum, the items listed below.

### 3.2.1 Lubrication Instructions

a. Include a table showing recommended lubricants for specific temperature ranges and applications.

b. Include chart(s) with schematic diagram of the equipment showing lubrication points, recommended types and grades of lubricants, and capacities. Provide a lubrication schedule showing service interval frequency.

### 3.2.2 Table of Preventative Maintenance Instructions

Include frequency in time, miles or hours covering routine servicing, lubrication, and adjustments.

### 3.2.3 Preventative Maintenance Inspection

Points and checklist should be clearly spelled out as part of operator-type inspection in this section. Include chart with schematic diagram and/or a separate inspection checklist - indicating what should be examined for wear or possible malfunction and what should be reported for repair.

### 3.2.4 Troubleshooting Guides and Diagnostic Techniques

Provide step-by-step procedures to enable prompt isolation of the cause of a malfunction with corrective maintenance instructions. Instructions shall clearly indicate why the check out is performed and what conditions are to be sought.

### 3.2.5 Removal and Preplacement Instructions

Provide step-by-step procedures for removal, replacement, disassembly and assembly of all components, assemblies, sub-assemblies, accessories, and attachments normally subjected to wear, damage, malfunction, and frequent replacement. These instructions should provide for a judicious combination of text and illustrations.

3.2.6 Maintenance and Repair Procedure

Provide instructions for tolerances, dimensions, settings, and adjustments normally required for performing routine maintenance servicing. Instructions shall provide the necessary information to bring equipment up to the required serviceable standard when it becomes unserviceable. Include instructions for examining equipment for needed repairs and adjustment, and any tests or inspections required to determine whether or not parts must be replaced.

3.3 PARTS MANUAL

3.3.1 Contents

The parts manual shall provide positive identification and coverage for all of the parts of components, assemblies, sub-assemblies, and accessories of the end item normally subject to wear, malfunctioning, damage, or loss. Include any special hardware requirements (eg., high-strength bolts and nuts). The parts manual may cover more than one model or series or equipments, components, assemblies, subassemblies, attachments, or accessories, such as a master parts catalog, in accordance with the manufacturer's standard commercial practice. Identification of the parts shall be such that all parts may be ordered and centrally stocked by the government without further identification to the make, model, and serial number of the equipment being provided.

3.3.2 Illustrations, Drawings, and/or Exploded Views

Provide clear and legible illustrations, drawings, and/or views to enable easy identification of all individual parts, components, assemblies, sub-assemblies, and accessories of the end item. Show part numbers and description on illustrations or list separately. When the illustrations omit the part numbers and description, both the illustrations and separate listing shall show the index, the illustrations and separate listing shall show the index, reference, or key number which will cross-reference the illustrated part to listed part. Parts shown in the listings shall be grouped by components, assemblies, and sub-assemblies with individual parts identified to the assembly.

3.3.3 End Item Manufacturer's Part Numbers

Include parts for which the end item manufacturer has proprietary rights or has exercised design control, and for which the end item manufacturer is the logical supplier. The end item manufacturer shall also assign numbers to purchased production parts, if such parts are altered to meet the prime manufacturer's design configuration. (Repainting, marking, or other nonsignificant operations are not adequate cause for use of exclusively assigned numbers).

3.3.4 Components Assemblies/Parts

Include those components assemblies/parts purchased by the end item manufacturer for which the end item manufacturer does not have control, and shall be identified by the actual manufacturer's name and part numbers. Detail parts in the manufacturer's assembly, as well as attaching parts, for which the manufacturer does not have design control shall also be identified by the applicable actual manufacturer's parts numbers. This paragraph does not restrict the end item manufacturer from assigning part numbers as long as the actual manufacturer's part number and the Federal

Supply Code for Manufacturer H4-1 (FSCM) or manufacturer is shown.

3.3.5 Appendices

End item manufacturer may add an appendix for cross-reference to implement components assemblies/parts requirements when implementation in manual form varies drastically with the style, format, and method of Contractor's standard commercial practice. Subject cross-referenced in an appendix will appear in the following format:

| End Item Manufacturer's Alpha Numeric Seq. | Actual Manufacturer's Name and/or FSCM* From H4.1~ | Actual Manufacturer Part No. |
|---|---|---|
| 100001 | John Doe & Co. 000000 | 2000002 |

*Federal Supply Code for Manufacturers Cataloging Handbook, Name to Code

3.4 VALIDATION

Each submittal shall be validated by the Contractor or Manufacturer as being accurate and applicable to the systems and equipment provided.

3.5 SPECIFIC EQUIPMENT SUBMITTALS

The technical sections of this specification identify the specific equipment or systems for which OMSI submittals are required. This paragraph' and its subparagraph contain a general list of various types of equipment and systems together with the OMSI information required for each type. The applicable OMSI information contained in this paragraph shall be submitted for each specific piece of equipment or system listed under the "OMSI Submittals" paragraph in the technical sections. Operating instructions; maintenance, service, and repair instructions; and parts manuals shall conform to the requirements of their -respective paragraph herein. Provide validation in accordance with Paragraph: VALIDATION for all submittals.

3.5.1 Pressure Gages

a. Manufacturer's descriptive literature, general.

b. Parts manuals and recommended spare parts list.

c. Maintenance, service and repair instructions.

d. Manufacturer's name, model number, serial number, Federal Stock Number (if any).

3.5.2 Automatic Pump Controls

Includes Pressure Indicating Transmitters, Flow Switches, Venturi Tubes, Differential Pressure Transmitters.

a. Manufacturer's descriptive literature, general.

b. Parts manual.

c. Maintenance, service and repair instructions.

d. Operating Instructions.

e. Manufacturer's name, model number, serial number, Federal Stock Number (if any).

f. Performance data at specified conditions.

g. Control wiring diagrams showing all terminations of conductors (and all control devices) labeled to permit identification in the field; part numbers of all control devices; normally open or normally `closed; voltage of all control `components.

h. Name, address and telephone number of the nearest manufacturer's representative.

3.5.3 Meters

a. Manufacturer's descriptive literature, general.

b. Parts manual and recommended spare parts list.

c. Maintenance, service and repair instructions.

d. Operating Instructions.

e. Manufacturer's name, model number, serial number, Federal Stock Number (if any).

f. Performance data at specified conditions.

g. Name, address and telephone number of the nearest manufacturer's representative.

3.5.4 Product Recovery Tank and Accessories

a. Manufacturer's descriptive literature, general.

b. Parts manual and recommended spare parts list.

c. Maintenance, service and repair instructions.

d. Operating Instructions.

e. Manufacturer's name, model number, serial number, Federal Stock Number (if any).

f. Performance data at specified conditions.

g. Name, address and telephone number of the nearest manufacturer's representative.

3.5.5 Hydrant Outlet Pits, Isolation Valve Pits, High Point Vent and Low Point Drain Pits

a. Manufacturer's descriptive literature, general.

b. Parts manual and recommended spare parts list.

c. Maintenance, service and repair instructions.

d. Manufacturer's name, model number, serial number, Federal Stock Number (if any).

e. Name, address and telephone number of the nearest manufacturer's representative.

3.5.6 Operating Tank Level Indicator

a. Manufacturer's descriptive literature, general.

b. Parts manual and recommended spare parts list.

c. Maintenance, service and repair instructions.

d. Operating Instructions.

e. Manufacturer's name, model number, serial number, Federal Stock Number (if any).

f. Performance data at specified conditions.

g. Control wiring diagrams showing all terminations of conductors (and all control devices) labeled to permit identification in the field; part numbers of all control devices; normalcy open or normally closed; voltage of all control components.

h. Name, address and telephone number of the nearest manufacturer's representative.

3.5.7 Loading Arms

a. Manufacturer's descriptive literature, general.

b. Parts manual and recommended spare parts list.

c. Maintenance, service and repair instructions.

d. Operating Instructions.

e. Manufacturer's name, model number, serial number, Federal Stock Number (if any).

f. Performance data at specified conditions.

g. Name, address and telephone number of the nearest manufacturer's representative.

h. SSEA approval letter.

3.5.8 Piping and Fittings

a. Certificates of Compliance.

b. Batch run numbers.

c. Manufacturer's descriptive literature, general.

d. Name address and telephone number of manufacturer.

3.5.9 Manual Valves

a. Manufacturer's descriptive literature, general.

b. Parts manual and recommended spare parts list.

c. Maintenance, service and repair instructions.

d. Operating Instructions.

e. Manufacturer's name, model number, serial number, Federal Stock Number (if any).

f. Performance data at specified conditions.

g. Where specified to have limit switches, control wiring diagrams showing all terminations of conductors (and all control devices) labeled to permit identification in the field; part numbers of all control devices; normally open or normally closed; voltage of all control components.

h. Name, address and telephone number of the nearest manufacturer's representative.

3.5.10 Gaskets and Isolating Gasket Kits

a. Manufacturer's descriptive literature, general.

b. Manufacturer's name, model number, serial number, Federal Stock Number (if any).

c. Name, address and telephone number of the nearest manufacturer's representative.

3.5.11 Strainers

a. Manufacturer's descriptive literature, general.

b. Parts manual and recommended spare parts list.

c. Maintenance, service and repair instructions.

d. Manufacturer's name, model number, serial number, Federal Stock Number (if any).

e. Name, address and telephone number of the nearest manufacturer's representative.

3.5.12 Protective Coatings

a. Manufacturer's descriptive literature, general.

b. Maintenance, service and repair instructions.

c. Manufacturer's name, model number, serial number, Federal Stock Number (if any).

d. Name, address and telephone number of the nearest manufacturer's representative.

3.5.13 Sample Connections

a. Manufacturer's descriptive literature, general.

b. Parts manual and recommended spare parts list.

c. Maintenance, service and repair instructions.

d. Operating Instructions.

e. Manufacturer's name, model number, serial number, Federal Stock Number (if any).

f. Name, address and telephone number of the nearest manufacturer's representative.

3.5.14 Filter Separators

a. Manufacturer's descriptive literature, general.

b. Parts manual and recommended spare parts list.

c. Maintenance, service and repair instructions.

d. Operating Instructions.

e. Manufacturer's name, model number, serial number, Federal Stock Number (if any).

f. Performance data at specifies conditions.

g. Name, address and telephone number of the nearest manufacturer's representative.

3.5.15 Water Draw-Off System

a. Manufacturer's descriptive literature, general.

b. Maintenance, service and repair instructions.

c. Operating Instructions.

d. Manufacturer's name, model number, serial number, Federal Stock Number (if any).

e. Name, address and telephone number of the nearest manufacturer's representative.

3.5.16 Pumps - Fueling, Fuel Transfer, Product Return

a. Manufacturer's descriptive literature, general.

b. Parts manual and recommended spare parts list.

c. Maintenance, service and repair instructions:

d. Manufacturer's name, model number, serial number, Federal Stock Number (if any).

e. Performance data at specified flow rates. Performance shall include:

(1) Head developed, horsepower required and efficiency.

(2) Pump curves, flow and power requirements, efficiency, head and operating speed. Curves to show operating points at full range of operating conditions.

f. Control wiring diagrams showing all terminations of conductors (and all control devices) labeled to permit identification in the field; part numbers of all control devices; normally open or normally closed; voltage of all control components and operational description.

g. Plan and elevation views of equipment showing clearance required for maintenance and/or replacement.

h. Name, address and telephone number of the nearest manufacturer's representative.

i. Shipping and operating weights.

j. Operating instructions.

k. Factory run test curves indicating flow, head rpm, vibration amplitude and BHP.

3.5.17 Flexible Hoses

a. Manufacturer's descriptive literature, general.

b. Maintenance service and repair instructions.

c. Manufacturer's name, model number, serial number.

d. Name, address and telephone number of the nearest manufacturer's representative.

3.5.18 Control Valves

(Submit for each type control valve specified)

a. Manufacturer's descriptive literature, general.

b. Operational description of valve and control pilots.

c. Description of valve assembly complete with parts list.

d. Recommended spare parts list for main valve and pilot control systems.

e. Instructions for trouble shooting.

f. Maintenance, service and repair instructions.

g. Manufacturer's name, model number and stock number.

h. Operational Test Data.

3.5.19 Engine-Generator

a. Internal and interconnecting wiring and control diagrams with data to explain detailed operation and control of the system or equipment.

b. A control sequence describing startup', operation, and shutdown.

c. Description of the function of each principal item of equipment.

d. Installation and maintenance instructions.

e. Safety precautions.

f. Diagrams and illustrations.

g. Testing methods.

h. Performance data.

i. Lubrication schedule including type, grade, temperature range, and frequence.

j. Parts list: The list shall indicate sources of supply, recommended spare parts, and name of servicing organization'.

k. List qualified permanent servicing organizations for support of the equipment, including addresses and certified qualifications.

3.5.20 Fire Alarm and Fire Detecting System

a. Manufacturer's descriptive literature, general.

b. Parts manual.

c. Maintenance, service and repair instructions.

d. Operating Instructions.

e. Drawing of component arrangement, schedule of components with sizes, types, and ratings, and wiring diagrams.

f. Manufacturer's name, model number, serial number, Federal Stock Number (if any).

g. Name, address and telephone number of the nearest manufacturer's representative.

3.5.21 Motor Control Center

a. Internal and interconnecting wiring and control diagrams with data to explain detailed operation and control of the system or equipment.

b. A control sequence describing startup, operation, and shutdown.

c. Description of the function of each principal item of equipment.

d. Installation and maintenance instructions.

e. Safety precautions.

f. Diagrams and illustrations.

g. Parts list.

h. Drawing of component arrangement, schedule of components with sizes, types, and ratings.

i. Manufacturer's name, model number, serial number.

j. Name, address and telephone number of the nearest manufacturer's representative.

3.5.22 Non-Automatic Transfer Switch

a. Manufacturer's descriptive literature, general.

b. Parts list.

c. Maintenance, service and repair instructions.

d. Operating Instructions.

e. Drawing of component arrangement, schedule of components with sizes, types, and ratings, and wiring diagrams.

f. Manufacturer's name, model number, serial number, Federal Stock Number (if any).

g. Name, address and telephone number of the nearest manufacturer's representative.

3.5.23 Pump Control Panel (PCP)

a. General description and specifications.

b. Comprehensive discussion of both hardware and operating program.

c. Installation and initial checkout procedures.

d. Detailed electrical and logical description.

e. Complete troubleshooting procedures, diagrams, and guidelines.

f. Complete alignment and calibration procedures for components.

g. Preventive maintenance requirements.

h. Detailed system schematics, system field assembly drawings, and system component specifications and dimensions.

i. Complete spare parts lists.

j. Interface requirements and capabilities.

k. Signal identification and timing diagrams.

l. Complete as-built bill of materials, control drawings, schedules, and sequence of operations.

m. Safety precautions.

n. Control sequence describing start-up, operation, and shutdown. Control sequence shall be integrated with startup and operation of the motor control center.

o. Part list which-shall indicate sources of supply, recommended spare parts, and name of servicing organization.

p. Manufacturer's name, address, and telephone number.

-- End of Section --

SECTION TABLE OF CONTENTS

DIVISION 01 - GENERAL REQUIREMENTS

SECTION 01780

CLOSEOUT SUBMITTALS

**03/04**

PART 1 GENERAL

1.1 SUBMITTALS
1.2 PROJECT RECORD DOCUMENTS
1.2.1 As-Built Drawings
1.2.1.1 Government Furnished Materials
1.2.1.2 Review of Working As-Built Drawings
1.2.1.3 Working As-Built and Final As-Built Drawings
1.2.1.3.# Review at 50% Construction Completion
1.2.1.3.# Review at Final Inspection
1.2.1.4 Drawing Preparation
1.2.1.5 Computer Aided Design and Drafting (CADD) Drawings
1.2.1.6 Withholding for Final As-Built Drawings
1.2.2 As-Built Record of Equipment and Materials
1.2.3 Final Approved Shop Drawings
1.2.4 Construction Contract Specifications
1.2.5 Real Property Equipment
1.2.6 Recording Construction Data
1.3 WARRANTY MANAGEMENT
1.3.1 Warranty Management Plan
1.3.2 Performance Bond
1.3.3 Pre-Warranty Conference
1.3.4 Contractor's Response to Construction Warranty Service Requirements
1.3.5 Warranty Tags
1.4 MECHANICAL TESTING, ADJUSTING, BALANCING, AND COMMISSIONING
1.5 OPERATION AND MAINTENANCE MANUALS
1.6 FINAL CLEANING

PART 2 PRODUCTS (NOT USED)

PART 3 EXECUTION (NOT USED)

-- End of Section Table of Contents --

SECTION 01780

CLOSEOUT SUBMITTALS
**03/04**

PART 1 GENERAL

1.1 SUBMITTALS

Government approval is required for submittals with a "G" designation; submittals not having a "G" designation are for information only. When used, a designation following the "G" designation identifies the office that will review the submittal for the Government. The following shall be submitted in accordance with Section 01330 SUBMITTAL PROCEDURES:

SD-02 Shop Drawings

As-Built Drawings; G-AE

Drawings showing final as-built conditions of the project. The final CADD as-built drawings shall consist of one set of electronic CADD drawing files in the specified format, one set of mylar drawings, 2 sets of blue-line prints of the mylars, and one set of the approved working as-built drawings.

a. Review at 50% Construction Completion
b. Review at Final Inspection

SD-03 Product Data

As-Built Record of Equipment and Materials; G

Two copies of the record listing the as-built materials and equipment incorporated into the construction of the project.

Warranty Management Plan; G

One set of the warranty management plan containing information relevant to the warranty of materials and equipment incorporated into the construction project, including the starting date of warranty of construction. The Contractor shall furnish with each warranty the name, address, and telephone number of each of the guarantor's representatives nearest to the project location.

Warranty Tags;

Two record copies of the warranty tags showing the layout and design.

Final Cleaning;

Two copies of the listing of completed final clean-up items.

## 1.2 PROJECT RECORD DOCUMENTS

### 1.2.1 As-Built Drawings

This paragraph covers as-built drawings complete, as a requirement of the contract. The terms "drawings," "contract drawings," "drawing files," "working as-built drawings" and "final as-built drawings" refer to contract drawings which are revised to be used for final as-built drawings.

#### 1.2.1.1 Government Furnished Materials

One set of electronic CADD files in the specified software and format revised to reflect all bid amendments will be provided by the Government at the preconstruction conference for projects requiring CADD file as-built drawings.

#### 1.2.1.2 Review of Working As-Built Drawings

#### 1.2.1.3 Working As-Built and Final As-Built Drawings

The Contractor shall revise 2 sets of paper drawings by red-line process to show the as-built conditions during the prosecution of the project. These working as-built marked drawings shall be kept current on a weekly basis and at least one set shall be available on the jobsite at all times. Changes from the contract plans which are made in the work or additional information which might be uncovered in the course of construction shall be accurately and neatly recorded as they occur by means of details and notes. The working and final as-built drawings shall show, but shall not be limited to, the following information:

a. The actual location, kinds and sizes of all sub-surface utility lines. In order that the location of these lines and appurtenances may be determined in the event the surface openings or indicators become covered over or obscured, the as-built drawings shall show, by offset dimensions to two permanently fixed surface features, the end of each run including each change in direction. Valves, splice boxes and similar appurtenances shall be located by dimensioning along the utility run from a reference point. The average depth below the surface of each run shall also be recorded.

b. The location and dimensions of any changes within the building structure.

c. Correct grade, elevations, cross section, or alignment of roads, earthwork, structures or utilities if any changes were made from contract plans.

d. Changes in details of design or additional information obtained from working drawings specified to be prepared and/or furnished by the Contractor; including but not limited to fabrication, erection, installation plans and placing details, pipe sizes, insulation material, dimensions of equipment foundations, etc.

e. The topography, invert elevations and grades of drainage installed or affected as part of the project construction.

f. Changes or modifications which result from the final inspection.

g. Where contract drawings or specifications present options, only the option selected for construction shall be shown on the final as-built

prints.

h. If borrow material for this project is from sources on Government property, or if Government property is used as a spoil area, the Contractor shall furnish a contour map of the final borrow pit/spoil area elevations.

i. Systems designed or enhanced by the Contractor, such as HVAC controls, fire alarm, fire sprinkler, and irrigation systems.

j. Modifications (change order price shall include the Contractor's cost to change working and final as-built drawings to reflect modifications) and compliance with the following procedures.

(1) Directions in the modification for posting descriptive changes shall be followed.

(2) A Modification Circle shall be placed at the location of each deletion.

(3) For new details or sections which are added to a drawing, a Modification Circle shall be placed by the detail or section title.

(4) For minor changes, a Modification Circle shall be placed by the area changed on the drawing (each location).

(5) For major changes to a drawing, a Modification Circle shall be placed by the title of the affected plan, section, or detail at each location.

(6) For changes to schedules or drawings, a Modification Circle shall be placed either by the schedule heading or by the change in the schedule.

(7) The Modification Circle size shall be 1/2 inch diameter unless the area where the circle is to be placed is crowded. Smaller size circle shall be used for crowded areas.

1.2.1.3.# Review at 50% Construction Completion

One set of the working as-built drawings, one copy of the working as-built CADD files on compact disc, and one set of prints of the working as-built CADD drawings shall be delivered to the Contracting Officer when construction is 50% complete.

1.2.1.3.# Review at Final Inspection

One set of the working as-built drawings, one copy of the working as built CADD files on compact disc, and one set of prints of the working as-built CADD drawings shall be delivered to the Contracting Officer for review and approval 30 days prior to scheduling the final inspection. Final inspection shall not be scheduled by the Contracting Officer until working as-built drawings have been received. After completion of the final inspection, the Government will return the copy of the working as-built drawings for corrections. The Contractor shall complete the corrections and return the working as-built drawings to the Contracting Officer within ten (10) calendar days. Upon approval, the corrected working as-built drawings will be returned to the Contractor for use in preparation of the final as-built drawings.

1.2.1.4 Drawing Preparation

The as-built drawings shall be modified as may be necessary to correctly show the features of the project as it has been constructed by bringing the contract set into agreement with approved working as-built prints, and adding such additional drawings as may be necessary. These working as-built marked prints shall be neat, legible and accurate. These drawings are part of the permanent records of this project and shall be returned to the Contracting Officer after approval by the Government. Any drawings damaged or lost by the Contractor shall be satisfactorily replaced by the Contractor at no expense to the Government.

1.2.1.5 Computer Aided Design and Drafting (CADD) Drawings

Only personnel proficient in the preparation of CADD drawings shall be employed to modify the contract drawings or prepare additional new drawings. Additions and corrections to the contract drawings shall be equal in quality and detail to that of the originals. Line colors, line weights, lettering, layering conventions, and symbols shall be the same as the original line colors, line weights, lettering, layering conventions, and symbols. If additional drawings are required, they shall be prepared using the specified electronic file format applying the same graphic standards specified for original drawings. The title block and drawing border to be used for any new final as-built drawings shall be identical to that used on the contract drawings. Additions and corrections to the contract drawings shall be accomplished using CADD files. The electronic files will be supplied on compact disc, read-only memory (CD-ROM). The Contractor shall be responsible for providing all program files and hardware necessary to prepare final as-built drawings. The Contracting Officer will review final as-built drawings for accuracy and the Contractor shall make required corrections, changes, additions, and deletions.

a. CADD colors shall be the "base" colors of red, green, and blue. Color code for changes shall be as follows:

(1) Deletions (red) - Deleted graphic items (lines) shall be colored red with red lettering in notes and leaders.

(2) Additions (Green) - Added items shall be drawn in green with green lettering in notes and leaders.

(3) Special (Blue) - Items requiring special information, coordination, or special detailing or detailing notes shall be in blue.

b. The Contract Drawing files shall be renamed in a manner related to the contract number (i.e., 98-C-10.DWG) as instructed in the Pre-Construction conference. Marked-up changes shall be made only to those renamed files. All changes shall be made on the layer/level as the original item. There shall be no deletions of existing lines; existing lines shall be over struck in red. Additions shall be in green with line weights the same as the drawing. Special notes shall be in blue on layer #63.

c. When final revisions have been completed, the cover sheet drawing shall show the wording "RECORD DRAWING AS-BUILT" followed by the name of the Contractor in letters at least 3/16 inch high. All other contract drawings shall be marked either "AS-Built" drawing denoting no revisions on the sheet or "Revised As-Built" denoting one or more revisions. Original

contract drawings shall be dated in the revision block.

d. Within 20 days for contracts $5 million and above after Government approval of all of the working as-built drawings for a phase of work, the Contractor shall prepare the final CADD as-built drawings for that phase of work and submit two sets of blue-lined prints of these drawings for Government review and approval. The Government will promptly return one set of prints annotated with any necessary corrections. Within 10 days for contracts $5 million and above the Contractor shall revise the CADD files accordingly at no additional cost and submit one set of final prints for the completed phase of work to the Government. Within 20 days for contracts $5 million and above of substantial completion of all phases of work, the Contractor shall submit the final as-built drawing package for the entire project. The submittal shall consist of one set of electronic files on compact disc, read-only memory (CD-ROM), one set of mylars, two sets of blue-line prints and one set of the approved working as-built drawings. They shall be complete in all details and identical in form and function to the contract drawing files supplied by the Government. Any transactions or adjustments necessary to accomplish this is the responsibility of the Contractor. The Government reserves the right to reject any drawing files it deems incompatible with the customer's CADD system. Paper prints, drawing files and storage media submitted will become the property of the Government upon final approval. Failure to submit final as-built drawing files and marked prints as specified shall be cause for withholding any payment due the Contractor under this contract. Approval and acceptance of final as-built drawings shall be accomplished before final payment is made to the Contractor.

1.2.1.6 Withholding for Final As-Built Drawings

An item entitled "As-Built Drawings" has been placed in the Bid/Proposal Schedule for work on as-built drawings. The amount for this item has established by the Contracting Officer and does not reflect the actual cost of providing final as-built drawings. This item becomes a part of the overall Contractor's price and the amount indicated in the item will be withheld from payment to the Contractor until the Final As-Built Drawings have been approved and accepted by the Contracting Officer.

1.2.2 As-Built Record of Equipment and Materials

The Contractor shall furnish one copy of preliminary record of equipment and materials used on the project 15 days prior to final inspection. This preliminary submittal will be reviewed and returned 2 days after final inspection with Government comments. Two sets of final record of equipment and materials shall be submitted 10 days after final inspection. The designations shall be keyed to the related area depicted on the contract drawings. The record shall list the following data:

RECORD OF DESIGNATED EQUIPMENT AND MATERIALS DATA

| Description | Specification Section | Manufacturer and Catalog, Model, and Serial Number | Composition and Size | Where Used |
|---|---|---|---|---|

1.2.3 Final Approved Shop Drawings

The Contractor shall furnish final approved project shop drawings 30 days

after transfer of the completed facility.

1.2.4 Construction Contract Specifications

The Contractor shall furnish final as-built construction contract specifications, including modifications thereto, 30 days after transfer of the completed facility.

1.2.5 Real Property Equipment

The Contractor shall furnish a list of installed equipment furnished under this contract. The list shall include all information usually listed on manufacturer's name plate. The "EQUIPMENT-IN-PLACE LIST" shall include, as applicable, the following for each piece of equipment installed: description of item, location (by room number), model number, serial number, capacity, name and address of manufacturer, name and address of equipment supplier, condition, spare parts list, manufacturer's catalog, and warranty. A draft list shall be furnished at time of transfer. The final list shall be furnished 30 days after transfer of the completed facility.

1.2.6 Recording Construction Data

a. During the progress of the work, the Contractor shall keep a careful record at the job site of all changes, corrections, and deviations from the layouts and details shown on the drawings to include all contract modifications. The Contractor shall enter such changes on project drawings promptly, but not later than on a weekly basis.

b. Where underground utilities are installed, note the elevation of the utility installed every 30 feet. Where new utilities cross existing utilities, note the elevation of the new and existing utility and the vertical and/or horizontal separation. Where new utilities run parallel to new and existing utilities, note the elevation at which installed and the horizontal and/or vertical separation between utilities.

(1) GIS Data: The Contractor shall use conventional surveying and other methods, such as a total station or Global Positioning Systems (GPS) for collection of as-built information at an accuracy level in accordance with "Geospatial Positioning Accuracy Standards, Part 3: National Standard for Spatial Data Accuracy," published by the Federal Geographic Data Committee (FGDC), dated July 1998. This document can be found at http://www.fgdc.gov/standards/status/sub1_3.html. All Survey data collected shall be provided to the Government in a digital format with an attached Survey Report identifying survey method, equipment list, calibration documentation, survey layout, description of control points, control diagrams, and field survey data. A Survey Control Database (consisting of a survey marker database and a survey traverse database) will be produced for all survey control points established under this contract, and delivered in a .dbf or ASCII comma-delimited format. If GPS is used, the contractor shall use survey grade GPS, at an accuracy level of +/- 2cm., when appropriate, to collect data to be overlaid onto the installation's orthophotograph and/or base map.

(2) All locational feature data (points, lines, polygons)

collected shall be delivered in Arc/Info format along with the original source files. The Geospatial files shall have an external spatial reference file (.prj) attached specifying the parameters of the coordinate system used (as provided by the government). All topologically correct geospatial data shall overlay on the installations latest orthorectified imagery provided by the government. All accuracy errors shall be reported to the contract project manager.

(3) Feature Attributes: The contractor shall identify the classification, type, size, location, ID number, and any other necessary attributes (specified by the Government) for all surveyed, mapped, designed, or proposed features. All symbol libraries, font libraries, text sizes, text formats, and text placements should be prepared in accordance with the SDS where practical. The contractor shall not develop new libraries without prior written approval from the Government.

(4) All graphic and non-graphic data will be collected in the format defined by the CADD/GIS Technology Center's Spatial Data Standards (SDS) release 2.0 (or the most current version available), except where modified by the Government. This document can be found at http://tsc.wes.army.mil/products/tssds-tsfms/tssds/projects/sds/.

(5) The Contractor shall provide metadata files for all locational data produced under this contract. The metadata file shall conform to the Federal Geographic Data Committee's "Content Standard for Digital Geospatial Metadata, Version 2.0" (or latest version) found at http://www.fgdc.gov/metadata/contstan.html. The output from metadata generator software shall be the standard format for all metadata files created under this contract. In addition, the metadata data shall be provided in ASCII text format. The digital metadata files shall be provided to the Government along with each product deliverable, unless otherwise approved in writing by the Government.

(6) The Government will provide the contractor with data and information concerning all necessary and pertinent functions and principal features of the identified project. These items will include:

(a) The installation's latest georeferenced digital planimetric data and/or base map in ESRI Arc/Info format, or best format available, with associated data files.

(b) The installation's latest orthorectified imagery and specified geospatial parameters (coordinate system, datum, projection, distance units).

(c) Any pertinent and necessary prototype or seed files.

(d) A copy of CADD/GIS Technology Center's Spatial Data Standards (SDS) release 1.95 (or latest version) on CD-ROM.

(e) A copy of "Geospatial Positioning Accuracy Standards, Part 3: National Standard for Spatial Data Accuracy," published by the Federal Geographic Data Committee (FGDC) in Adobe Acrobat Reader (.pdf) format.

(f) Frequency settings for the Real-Time Kinematic (RTK) GPS Base Station and the preferred GPS receiver specifications.

(g) Any other data or schematics deemed necessary for project completion, pending approval from the Government.

c. At the time of beneficial occupancy, the Contractor shall submit as-built data to the Contracting Officer, or his/her designated representative incorporating the aforementioned information into the project drawings. The Contractor shall also ensure a copy of all as-built data is delivered to the Base GeoBase office. The as-built deliverable (plans, shop drawings, surveys, studies, imagery, designs, manuals, spare parts lists, etc.) shall be in a digital (electronic information) format and shall be delivered on standard compact disks (minimum 650 megabytes) in a format that is directly compatible with the CADD/GIS Technology Center's Spatial Data Standards version 2.0 (or latest version available). No "red-line" or marked-up drawings will be accepted.

## 1.3 WARRANTY MANAGEMENT

### 1.3.1 Warranty Management Plan

The Contractor shall develop a warranty management plan which shall contain information relevant to the clause Warranty of Construction. At least 30 days before the planned pre-warranty conference, the Contractor shall submit the warranty management plan for Government approval. The warranty management plan shall include all required actions and documents to assure that the Government receives all warranties to which it is entitled. The plan shall be in narrative form and contain sufficient detail to render it suitable for use by future maintenance and repair personnel, whether tradesmen, or of engineering background, not necessarily familiar with this contract. The term "status" as indicated below shall include due date and whether item has been submitted or was accomplished. Warranty information made available during the construction phase shall be submitted to the Contracting Officer for approval prior to each monthly pay estimate. Approved information shall be assembled in a binder and shall be turned over to the Government upon acceptance of the work. The construction warranty period shall begin on the date of project acceptance and shall continue for the full product warranty period. A joint 4 month and 9 month warranty inspection shall be conducted, measured from time of acceptance, by the Contractor, Contracting Officer and the Customer Representative. Information contained in the warranty management plan shall include, but shall not be limited to, the following:

a. Roles and responsibilities of all personnel associated with the warranty process, including points of contact and telephone numbers within the organizations of the Contractors, subcontractors, manufacturers or suppliers involved.

b. Listing and status of delivery of all Certificates of Warranty for extended warranty items, to include roofs, HVAC balancing, pumps, motors, transformers, and for all commissioned systems such as fire protection and alarm systems, sprinkler systems, lightning protection systems, etc.

c. A list for each warranted equipment, item, feature of construction or system indicating:

1. Name of item.
2. Model and serial numbers.
3. Location where installed.
4. Name and phone numbers of manufacturers or suppliers.
5. Names, addresses and telephone numbers of sources of spare parts.
6. Warranties and terms of warranty. This shall include one-year

overall warranty of construction. Items which have extended warranties shall be indicated with separate warranty expiration dates.
7. Cross-reference to warranty certificates as applicable.
8. Starting point and duration of warranty period.
9. Summary of maintenance procedures required to continue the warranty in force.
10. Cross-reference to specific pertinent Operation and Maintenance manuals.
11. Organization, names and phone numbers of persons to call for warranty service.
12. Typical response time and repair time expected for various warranted equipment.

d. The Contractor's plans for attendance at the 4 and 9 month post-construction warranty inspections conducted by the Government.

e. Procedure and status of tagging of all equipment covered by extended warranties.

f. Copies of instructions to be posted near selected pieces of equipment where operation is critical for warranty and/or safety reasons.

1.3.2 Performance Bond

The Contractor's Performance Bond shall remain effective throughout the construction period.

a. In the event the Contractor fails to commence and diligently pursue any construction warranty work required, the Contracting Officer will have the work performed by others, and after completion of the work, will charge the remaining construction warranty funds of expenses incurred by the Government while performing the work, including, but not limited to administrative expenses.

b. In the event sufficient funds are not available to cover the construction warranty work performed by the Government at the Contractor's expense, the Contracting Officer will have the right to recoup expenses from the bonding company.

c. Following oral or written notification of required construction warranty repair work, the Contractor shall respond in a timely manner. Written verification will follow oral instructions. Failure of the Contractor to respond will be cause for the Contracting Officer to proceed against the Contractor.

1.3.3 Pre-Warranty Conference

Prior to contract completion, and at a time designated by the Contracting Officer, the Contractor shall meet with the Contracting Officer to develop a mutual understanding with respect to the requirements of this section. Communication procedures for Contractor notification of construction warranty defects, priorities with respect to the type of defect, reasonable time required for Contractor response, and other details deemed necessary by the Contracting Officer for the execution of the construction warranty shall be established/reviewed at this meeting. In connection with these requirements and at the time of the Contractor's quality control completion inspection, the Contractor shall furnish the name, telephone number and address of a licensed and bonded company which is authorized to initiate and pursue

construction warranty work action on behalf of the Contractor. This point of contact will be located within the local service area of the warranted construction, shall be continuously available, and shall be responsive to Government inquiry on warranty work action and status. This requirement does not relieve the Contractor of any of its responsibilities in connection with other portions of this provision.

1.3.4 Contractor's Response to Construction Warranty Service Requirements

Following oral or written notification by the Contracting Officer, the Contractor shall respond to construction warranty service requirements in accordance with the "Construction Warranty Service Priority List" and the three categories of priorities listed below. The Contractor shall submit a report on any warranty item that has been repaired during the warranty period. The report shall include the cause of the problem, date reported, corrective action taken, and when the repair was completed. If the Contractor does not perform the construction warranty within the timeframes specified, the Government will perform the work and backcharge the construction warranty payment item established.

a. First Priority Code 1. Perform onsite inspection to evaluate situation, and determine course of action within 4 hours, initiate work within 6 hours and work continuously to completion or relief.

b. Second Priority Code 2. Perform onsite inspection to evaluate situation, and determine course of action within 8 hours, initiate work within 24 hours and work continuously to completion or relief.

c. Third Priority Code 3. All other work to be initiated within 3 work days and work continuously to completion or relief.

d. The "Construction Warranty Service Priority List" is as follows:

Code 1 - Hydrant Fueling System
(1) Control system
(2) Valve adjustment
(3) Pumping System

Code 1-Air Conditioning Systems
(1) Recreational support.
(2) Air conditioning leak in part of building, if causing damage.
(3) Air conditioning system not cooling properly.

Code 1-Doors
(1) Overhead doors not operational, causing a security, fire, or safety problem.
(2) Interior, exterior personnel doors or hardware, not functioning properly, causing a security, fire, or safety problem.

Code 3-Doors
(1) Overhead doors not operational.
(2) Interior/exterior personnel doors or hardware not functioning properly.

Code 1-Electrical
(1) Power failure (entire area or any building operational after 1600 hours).
(2) Security lights
(3) Smoke detectors

Code 2-Electrical
(1) Power failure (no power to a room or part of building).
(2) Receptacle and lights (in a room or part of building).

Code 3-Electrical
Street lights.

Code 1-Gas
(1) Leaks and breaks.
(2) No gas to family housing unit or cantonment area.

Code 1-Heat
(1). Area power failure affecting heat.
(2). Heater in unit not working.

Code 2-Kitchen Equipment
(1) Dishwasher not operating properly.
(2) All other equipment hampering preparation of a meal.

Code 1-Plumbing
(1) Hot water heater failure.
(2) Leaking water supply pipes.

Code 2-Plumbing
(1) Flush valves not operating properly.
(2) Fixture drain, supply line to commode, or any water pipe leaking.
(3) Commode leaking at base.

Code 3 -Plumbing
Leaky faucets.

Code 3-Interior
(1) Floors damaged.
(2) Paint chipping or peeling.
(3) Casework.

Code 1-Roof Leaks
Temporary repairs will be made where major damage to property is occurring.

Code 2-Roof Leaks
Where major damage to property is not occurring, check for location of leak during rain and complete repairs on a Code 2 basis.

Code 2-Water (Exterior)
No water to facility.

Code 2-Water (Hot)
No hot water in portion of building listed.

Code 3-All other work not listed above.

1.3.5 Warranty Tags

At the time of installation, each warranted item shall be tagged with a durable, oil and water resistant tag approved by the Contracting Officer. Each tag shall be attached with a copper wire and shall be sprayed with a

silicone waterproof coating. The date of acceptance and the QC signature shall remain blank until project is accepted for beneficial occupancy. The tag shall show the following information.

a. Type of product/material_____.

b. Model number_____.

c. Serial number_____.

d. Contract number_____.

e. Warranty period_____from_____to_____.

f. Inspector's signature_____.

g. Construction Contractor_____.

Address_____.

Telephone number_____.

h. Warranty contact_____.

Address_____.

Telephone number_____.

i. Warranty response time priority code_____.

j. WARNING - PROJECT PERSONNEL TO PERFORM ONLY OPERATIONAL MAINTENANCE DURING THE WARRANTY PERIOD.

## 1.4 MECHANICAL TESTING, ADJUSTING, BALANCING, AND COMMISSIONING

Prior to final inspection and transfer of the completed facility; all reports, statements, certificates, and completed checklists for testing, adjusting, balancing, and commissioning of mechanical systems shall be submitted to and approved by the Contracting Officer as specified in applicable technical specification sections.

## 1.5 OPERATION AND MAINTENANCE MANUALS

Operation manuals and maintenance manuals shall be submitted as specified. Operation manuals and maintenance manuals provided in a common volume shall be clearly differentiated and shall be separately indexed.

## 1.6 FINAL CLEANING

The premises shall be left broom clean. Stains, foreign substances, and temporary labels shall be removed from surfaces. Carpet and soft surfaces shall be vacuumed. Equipment and fixtures shall be cleaned to a sanitary condition. Filters of operating equipment shall be replaced. Debris shall be removed from roofs, drainage systems, gutters, and downspouts. Paved areas shall be swept and landscaped areas shall be raked clean. The site shall have waste, surplus materials, and rubbish removed. The project area shall have temporary structures, barricades, project signs, and construction facilities removed. A list of completed clean-up items shall be submitted on the day of final inspection.

PART 2 PRODUCTS (NOT USED)

PART 3 EXECUTION (NOT USED)

-- End of Section --

SECTION TABLE OF CONTENTS

DIVISION 02 - SITE CONSTRUCTION

SECTION 02120A

TRANSPORTATION AND DISPOSAL OF HAZARDOUS MATERIALS

**10/96**

PART 1 GENERAL

1.1 REFERENCES
1.2 SUBMITTALS
1.3 QUALIFICATIONS
1.3.1 Transportation and Disposal Coordinator
1.3.2 Training
1.3.3 Certification
1.4 LAWS AND REGULATIONS REQUIREMENTS
1.5 DEFINITIONS

PART 2 PRODUCTS

2.1 MATERIALS
2.1.1 Packagings
2.1.2 Markings
2.1.3 Labeling
2.1.4 Placards
2.1.5 Spill Response Materials
2.2 EQUIPMENT AND TOOLS

PART 3 EXECUTION

3.1 ON-SITE HAZARDOUS WASTE MANAGEMENT
3.1.1 Hazardous Waste Classification
3.1.2 Management Plan
3.2 OFF-SITE HAZARDOUS WASTE MANAGEMENT
3.2.1 Description of TSD Facility and Transporter
3.2.2 Status of the Facility
3.2.3 Shipping Documents and Packagings Certification
3.2.4 Transportation
3.2.5 Treatment and Disposal of Hazardous Wastes
3.3 HAZARDOUS MATERIALS MANAGEMENT
3.3.1 Identification of Proper Shipping Names
3.3.2 Packaging, Labeling, and Marking
3.3.3 Shipping Documents
3.3.3.1 Asbestos Waste Shipment Documents
3.3.3.2 Other Hazardous Material Shipment Documents
3.4 OBTAINING EPA ID NUMBERS
3.5 SPECIAL REQUIREMENTS FOR ASBESTOS WASTES
3.6 WASTE MINIMIZATION
3.7 RECORDKEEPING
3.8 SPILL RESPONSE
3.9 EMERGENCY CONTACTS

-- End of Section Table of Contents --

SECTION 02120A

TRANSPORTATION AND DISPOSAL OF HAZARDOUS MATERIALS
**10/96**

PART 1 GENERAL

1.1 REFERENCES

The publications listed below form a part of this specification to the extent referenced. The publications are referred to in the text by basic designation only.

U.S. NATIONAL ARCHIVES AND RECORDS ADMINISTRATION (NARA)

| | |
|---|---|
| 40 CFR 61 | National Emission Standards for Hazardous Air Pollutants |
| 40 CFR 261 | Identification and Listing of Hazardous Waste |
| 40 CFR 262 | Standards Applicable to Generators of Hazardous Waste |
| 40 CFR 263 | Standards Applicable to Transporters of Hazardous Waste |
| 40 CFR 264 | Standards for Owners and Operators of Hazardous Waste Treatment, Storage, and Disposal Facilities |
| 40 CFR 265 | Interim Status Standards for Owners and Operators of Hazardous Waste Treatment, Storage, and Disposal Facilities |
| 40 CFR 268 | Land Disposal Restrictions |
| 40 CFR 270 | EPA Administered Permit Programs: The Hazardous Waste Permit Program |
| 40 CFR 279 | Standards for the Management of Used Oil |
| 40 CFR 300 | National Oil and Hazardous Substances Pollution Contingency Plan |
| 40 CFR 302 | Designation, Reportable Quantities, and Notification |
| 49 CFR 107 | Hazardous Materials Program Procedures |
| 49 CFR 172 | Hazardous Materials Table, Special Provisions, Hazardous Materials Communications, Emergency Response Information, and Training Requirements |

| | |
|---|---|
| 49 CFR 173 | Shippers - General Requirements for Shipments and Packagings |
| 49 CFR 178 | Specifications for Packagings |

1.2 SUBMITTALS

Government approval is required for submittals with a "G" designation; submittals not having a "G" designation are for information only. When used, a designation following the "G" designation identifies the office that will review the submittal for the Government. The following shall be submitted in accordance with Section 01330 SUBMITTAL PROCEDURES:

SD-03 Product Data

On-site Hazardous Waste Management; G,

Prior to start of work, a plan detailing the manner in which hazardous wastes shall be managed.

Notices of Non-Compliance and Notices of Violation,

Notices of non-compliance or notices of violation by a Federal, state, or local regulatory agency issued to the Contractor in relation to any work performed under this contract. The Contractor shall immediately provide copies of such notices to the Contracting Officer. The Contractor shall also furnish all relevant documents regarding the incident and any information requested by the Contracting Officer, and shall coordinate its response to the notice with the Contracting Officer or his designated representative prior to submission to the notifying authority. The Contractor shall also furnish a copy to the Contracting Officer of all documents submitted to the regulatory authority, including the final reply to the notice, and all other materials, until the matter is resolved.

SD-06 Test Reports

Recordkeeping; G,

Information necessary to file state annual or EPA biennial reports for all hazardous waste transported, treated, stored, or disposed of under this contract. The Contractor shall not forward these data directly to the regulatory agency but to the Contracting Officer at the specified time. The submittal shall contain all the information necessary for filing of the formal reports in the form and format required by the governing Federal or state regulatory agency. A cover letter shall accompany the data to include the contract number, Contractor name, and project location.

Spill Response; G

In the event of a spill or release of a hazardous substance (as designated in 40 CFR 302), or pollutant or contaminant, or oil (as governed by the Oil Pollution Act (OPA), 33 U.S.C. 2701 et seq.), the Contractor shall notify the Contracting Officer immediately. If the spill exceeds a reporting threshold, the Contractor shall follow the pre-established procedures for immediate reporting to

the Contracting Officer.

Exception Reports; G,

In the event that a manifest copy documenting receipt of hazardous waste at the treatment, storage, and disposal facility is not received within 35 days of shipment initiation, the Contractor shall prepare and submit an exception report to the Contracting Officer within 37 days of shipment initiation.

SD-07 Certificates

Qualifications; G

Copies of the current certificates of registration issued to the Contractor and/or subcontractors or written statements certifying exemption from these requirements.

EPA Off-Site Policy; G

A letter certifying that EPA considers the facilities to be used for all off-site disposal to be acceptable in accordance with the Off-Site policy in 40 CFR 300, Section .440. This certification shall be provided for wastes from Resource Conservation and Recovery Act (RCRA), 42 U.S.C. 6901 et seq., sites as well as from Comprehensive Environmental Response Compensation and Liability Act (CERCLA), 42 U.S.C. 9601 et seq., responses. See Attachment A, sample certification, at the end of this section.

Management Plan;

Certificates documenting the ultimate disposal of hazardous wastes, polychlorinated biphenyls (PCBs), and/or asbestos within 180 days of initial shipment. Receipt of these certificates will be required for final payment.

Shipping Documents and Packagings Certification; G,

Packaging assurances shall be furnished prior to transporting hazardous material; "generator copies" of hazardous waste manifests land disposal restriction notifications asbestos waste shipment records "generator copies" of manifests used for initiating shipments of PCBs used oil invoices/shipment records bill of ladings supporting waste analysis documents shall be furnished when shipments are originated; and "receipt copies" of asbestos waste shipment records at the designated disposal facility shall be furnished not later than 35 days after acceptance of the shipment.

## 1.3 QUALIFICATIONS

### 1.3.1 Transportation and Disposal Coordinator

The Contractor shall designate, by position and title, one person to act as the Transportation and Disposal Coordinator (TDC) for this contract. The TDC shall serve as the single point of contact for all environmental regulatory matters and shall have overall responsibility for total environmental compliance at the site including, but not limited to, accurate identification and classification of hazardous waste and hazardous

materials; determination of proper shipping names; identification of marking, labeling, packaging and placarding requirements; completion of waste profiles, hazardous waste manifests, asbestos waste shipment records, PCB manifests, bill of ladings, exception and discrepancy reports; and all other environmental documentation. The TDC shall have, at a minimum, one year of specialized experience in the management and transportation of hazardous waste.

1.3.2 Training

The Contractor's hazardous materials employees shall be trained, tested, and certified to safely and effectively carry out their assigned duties in accordance with Section 01351A SAFETY, HEALTH, AND EMERGENCY RESPONSE (HTRW/UST). The Contractor's employees transporting hazardous materials or preparing hazardous materials for transportation shall be trained, tested, and certified in accordance with 49 CFR 172.

1.3.3 Certification

The Contractor and/or subcontractors transporting hazardous materials shall possess a current certificate of registration issued by the Research and Special Programs Administration (RSPA), U.S. Department of Transportation, when required by 49 CFR 107, Subpart G.

1.4 LAWS AND REGULATIONS REQUIREMENTS

Work shall meet or exceed the minimum requirements established by Federal, state, and local laws and regulations which are applicable. These requirements are amended frequently and the Contractor shall be responsible for complying with amendments as they become effective. In the event that compliance exceeds the scope of work or conflicts with specific requirements of the contract, the Contractor shall notify the Contracting Officer immediately.

1.5 DEFINITIONS

a. Hazardous Material. A substance or material which has been determined by the Secretary of Transportation to be capable of posing an unreasonable risk to health, safety, and property when transported in commerce, and which has been so designated pursuant to the Hazardous Materials Transportation Act, 49 U.S.C. Appendix Section 1801 et seq. The term includes materials designated as hazardous materials under the provisions of 49 CFR 172, Sections .101 and .102 and materials which meet the defining criteria for hazard classes and divisions in 49 CFR 173. EPA designated hazardous wastes are also hazardous materials.

b. Hazardous Waste. A waste which meets criteria established in RCRA or specified by the EPA in 40 CFR 261 or which has been designated as hazardous by a RCRA authorized state program.

PART 2 PRODUCTS

2.1 MATERIALS

The Contractor shall provide all of the materials required for the packaging, labeling, marking, placarding and transportation of hazardous wastes and hazardous materials in conformance with Department of Transportation standards. Details in this specification shall not be

construed as establishing the limits of the Contractor's responsibility.

2.1.1 Packagings

The Contractor shall provide containers for packaging hazardous materials/wastes consistent with the authorizations referenced in the Hazardous Materials Table in 49 CFR 172, Section .101, Column 8. Bulk and non-bulk packaging shall meet the corresponding specifications in 49 CFR 173 referenced in the Hazardous Materials Table, 49 CFR 172, Section .101. Each packaging shall conform to the general packaging requirements of Subpart B of 49 CFR 173, to the requirements of 49 CFR 178 at the specified packing group performance level, to the requirements of special provisions of column 7 of the Hazardous Materials Table in 49 CFR 172, Section .101, and shall be compatible with the material to be packaged as required by 40 CFR 262. The Contractor shall also provide other packaging related materials such as materials used to cushion or fill voids in overpacked containers, etc. Sorbent materials shall not be capable of reacting dangerously with, being decomposed by, or being ignited by the hazardous materials being packaged. Additionally, sorbents used to treat free liquids to be disposed of in landfills shall be non-biodegradable as specified in 40 CFR 264, Section .314.

2.1.2 Markings

The Contractor shall provide markings for each hazardous material/waste package, freight container, and transport vehicle consistent with the requirements of 49 CFR 172, Subpart D and 40 CFR 262, Section .32 (for hazardous waste) and 40 CFR 61, Section .149(d) (for asbestos). Markings shall be capable of withstanding, without deterioration or substantial color change, a 180 day exposure to conditions reasonably expected to be encountered during container storage and transportation.

2.1.3 Labeling

The Contractor shall provide primary and subsidiary labels for hazardous materials/wastes consistent with the requirements in the Hazardous Materials Table in 49 CFR 172, Section .101, Column 6. Labels shall meet design specifications required by 49 CFR 172, Subpart E including size, shape, color, printing, and symbol requirements. Labels shall be durable and weather resistant and capable of withstanding, without deterioration or substantial color change, a 180 day exposure to conditions reasonably expected to be encountered during container storage and transportation.

2.1.4 Placards

For each off-site shipment of hazardous material/waste, the Contractor shall provide primary and subsidiary placards consistent with the requirements of 49 CFR 172, Subpart F. Placards shall be provided for each side and each end of bulk packaging, freight containers, transport vehicles, and rail cars requiring such placarding. Placards may be plastic, metal, or other material capable of withstanding, without deterioration, a 30 day exposure to open weather conditions and shall meet design requirements specified in 49 CFR 172, Subpart F.

2.1.5 Spill Response Materials

The Contractor shall provide spill response materials including, but not limited to, containers, adsorbent, shovels, and personal protective equipment. Spill response materials shall be available at all times in

which hazardous materials/wastes are being handled or transported. Spill response materials shall be compatible with the type of material being handled.

## 2.2 EQUIPMENT AND TOOLS

The Contractor shall provide miscellaneous equipment and tools necessary to handle hazardous materials and hazardous wastes in a safe and environmentally sound manner.

# PART 3 EXECUTION

## 3.1 ON-SITE HAZARDOUS WASTE MANAGEMENT

These paragraphs apply to Government owned waste only. Contractors are prohibited by 10 U.S.C. 2692 from storing contractor owned waste on site for any length of time. The Contractor shall be responsible for ensuring compliance with all Federal, state, and local hazardous waste laws and regulations and shall verify those requirements when preparing reports, waste shipment records, hazardous waste manifests, or other documents. The Contractor shall identify hazardous wastes using criteria set forth in 40 CFR 261 or all applicable state and local laws, regulations, and ordinances. When accumulating hazardous waste on-site, the Contractor shall comply with generator requirements in 40 CFR 262 and any applicable state or local law or regulations. On-site accumulation times shall be restricted to applicable time frames referenced in 40 CFR 262, Section .34 and any applicable state or local law or regulation. Accumulation start dates shall commence when waste is first generated (i.e. containerized or otherwise collected for discard). The Contractor shall only use containers in good condition and compatible with the waste to be stored. The Contractor shall be responsible for ensuring containers are closed except when adding or removing waste. The Contractor shall be responsible for immediately marking all hazardous waste containers with the words "hazardous waste" and other information required by 40 CFR 262, Section .32 and any applicable state or local law or regulation as soon as the waste is containerized. An additional marking shall be placed on containers of "unknowns" designating the date sampled, and the suspected hazard. The Contractor shall be responsible for inspecting containers for signs of deterioration and shall be responsible for responding to any spills or leaks. The Contractor shall inspect all hazardous waste areas weekly and shall provide written documentation of the inspection. Inspection logs shall contain date and time of inspection, name of individual conducting the inspection, problems noted, and corrective actions taken.

### 3.1.1 Hazardous Waste Classification

The Contractor, in consultation with the Contracting Officer , shall identify all waste codes applicable to each hazardous waste stream based on requirements in 40 CFR 261 or any applicable state or local law or regulation. The Contractor shall also identify all applicable treatment standards in 40 CFR 268 and state land disposal restrictions and shall make a determination as to whether or not the waste meets or exceeds the standards. Waste profiles, analyses, classification and treatment standards information shall be submitted to Contracting Officer for review and approval.

### 3.1.2 Management Plan

The Contractor shall prepare a plan detailing the manner in which hazardous

wastes will be managed and describing the types and volumes of hazardous wastes anticipated to be managed as well as the management practices to be utilized. The plan shall identify the method to be used to ensure accurate piece counts and/or weights of shipments; shall identify waste minimization methods; shall propose facilities to be utilized for treatment, storage, and/or disposal; shall identify areas on-site where hazardous wastes are to be handled; shall identify whether transfer facilities are to be utilized; and if so, how the wastes will be tracked to ultimate disposal.

## 3.2 OFF-SITE HAZARDOUS WASTE MANAGEMENT

The Contractor shall use RCRA Subtitle C permitted facilities which meet the requirements of 40 CFR 264 or facilities operating under interim status which meet the requirements of 40 CFR 265. Off-site treatment, storage, and/or disposal facilities with significant RCRA violations or compliance problems (such as facilities known to be releasing hazardous constituents into ground water, surface water, soil, or air) shall not be used.

### 3.2.1 Description of TSD Facility and Transporter

The Contractor shall provide the Contracting Officer with EPA ID numbers, names, locations, and telephone numbers of TSD facilities and transporters. This information shall be contained in the Hazardous Waste Management Plan for approval prior to waste disposal.

### 3.2.2 Status of the Facility

Facilities receiving hazardous waste must be permitted in accordance with 40 CFR 270 or operating under interim status in accordance with 40 CFR 265 requirements, or must be permitted by an authorized state program. Additionally, prior to using a TSD Facility, the Contractor shall contact the EPA Regional Off-site Coordinator specified in 40 CFR 300, Section .440, to determine the facility's status, and document all information necessary to satisfy the requirements of the EPA Off-Site policy and furnish this information to the Contracting Officer.

### 3.2.3 Shipping Documents and Packagings Certification

Prior to shipment of any hazardous material off-site, the Contractor's TDC shall provide written certification to the Contracting Officer that hazardous materials have been properly packaged, labeled, and marked in accordance with Department of Transportation and EPA requirements.

### 3.2.4 Transportation

The Contractor shall use manifests for transporting hazardous wastes as required by 40 CFR 263 or any applicable state or local law or regulation. Transportation shall comply with all requirements in the Department of Transportation referenced regulations in the 49 CFR series. The Contractor shall acquire manifests in accordance with the hierarchy established in 40 CFR 262, Section .21. The Contractor shall prepare hazardous waste manifests for each shipment of hazardous waste shipped off-site. Manifests shall be completed using instructions in 40 CFR 262, Subpart B and any applicable state or local law or regulation. Manifests and waste profiles shall be submitted to Contracting Officer for review and approval. The Contractor shall prepare land disposal restriction notifications as required by 40 CFR 268 or any applicable state or local law or regulation for each shipment of hazardous waste. Notifications shall be submitted with the manifest to the Contracting Officer for review and approval.

3.2.5 Treatment and Disposal of Hazardous Wastes

The hazardous waste shall be transported to an approved hazardous waste treatment, storage, or disposal facility within 90 days of the accumulation start date on each container. The Contractor shall ship hazardous wastes only to facilities which are properly permitted to accept the hazardous waste or operating under interim status. The Contractor shall ensure wastes are treated to meet land disposal treatment standards in 40 CFR 268 prior to land disposal. The Contractor shall propose TSD facilities via submission of the Hazardous Waste Management Plan, subject to the approval of the Contracting Officer.

3.3 HAZARDOUS MATERIALS MANAGEMENT

The Contractor, in consultation with the Contracting Officer, shall evaluate, prior to shipment of any material off-site, whether the material is regulated as a hazardous waste in addition to being regulated as a hazardous material; this shall be done for the purpose of determining proper shipping descriptions, marking requirements, etc., as described below.

3.3.1 Identification of Proper Shipping Names

The Contractor shall use 49 CFR 172, Section .101 to identify proper shipping names for each hazardous material including hazardous wastes to be shipped off-site. Proper shipping names shall be submitted to the Contracting Officer in the form of draft shipping documents for review and approval.

3.3.2 Packaging, Labeling, and Marking

The Contractor shall package, label, and mark hazardous materials/wastes using the specified materials and in accordance with the referenced authorizations. The Contractor shall mark each container of hazardous waste of 104 gallons or less with the following:

"HAZARDOUS WASTE - Federal Law Prohibits Improper Disposal.
If found, contact the nearest police or public safety authority or the U.S. Environmental Protection Agency.
Generator's name _____
Manifest Document Number _____".

3.3.3 Shipping Documents

The Contractor shall ensure that each shipment of hazardous material sent off-site is accompanied by properly completed shipping documents.

3.3.3.1 Asbestos Waste Shipment Documents

The Contractor shall prepare waste shipment records as required by 40 CFR 61 for shipments of asbestos. Waste shipment records shall be submitted to the Contracting Officer for review and approval. Waste shipment records shall be signed by the Contractor.

3.3.3.2 Other Hazardous Material Shipment Documents

The Contractor shall prepare a bill of lading for each shipment of hazardous material which is not accompanied by a hazardous waste manifest

or asbestos waste shipment record which fulfills the shipping paper requirements. The bill of lading shall satisfy the requirements of 49 CFR 172, Subpart C, and 40 CFR 279 if shipping used oil and any applicable state or local law or regulation, and shall be submitted to the Contracting Officer for review and approval. For laboratory samples and treatability study samples, the Contractor shall prepare bills of lading and other documentation as necessary to satisfy conditions of the sample exclusions in 40 CFR 261, Section .4(d) and (e) and any applicable state or local law or regulation. Bill of ladings requiring shipper's certifications will shall be signed by the Government.

## 3.4 OBTAINING EPA ID NUMBERS

The Contractor shall complete EPA Form 8700-12, Notification of Hazardous Waste Activity, and submit to the Contracting Officer for review and approval. The Contractor shall allow a minimum of 30 days for processing the application and assigning the EPA ID number. Shipment shall be made not earlier than one week after receipt of the EPA ID number.

## 3.5 SPECIAL REQUIREMENTS FOR ASBESTOS WASTES

If work involves asbestos containing wastes, the Contractor shall manage these wastes in accordance with specification Section 13280A.

## 3.6 WASTE MINIMIZATION

The Contractor shall minimize the generation of hazardous waste to the maximum extent practicable. The Contractor shall take all necessary precautions to avoid mixing clean and contaminated wastes.

## 3.7 RECORDKEEPING

The Contractor shall be responsible for maintaining adequate records to support information provided to the Contracting Officer regarding exception reports, annual reports, and biennial reports. The Contractor shall be responsible for maintaining asbestos waste shipment records for a minimum of 3 years from the date of shipment or any longer period required by any applicable law or regulation or any other provision of this contract.

## 3.8 SPILL RESPONSE

The Contractor shall respond to any spill of hazardous material or hazardous waste which are in the custody or care of the Contractor, pursuant to this contract. Any direction from the Contracting Officer concerning a spill or release shall not be considered a change under the contract. The Contractor shall comply with all applicable requirements of Federal, state, or local laws or regulations regarding any spill incident.

## 3.9 EMERGENCY CONTACTS

The Contractor shall be responsible for complying with the emergency contact provisions in 49 CFR 172, Section .604. Whenever the Contractor ships hazardous materials, the Contractor shall provide a 24 hr emergency response contact and phone number of a person knowledgeable about the hazardous materials being shipped and who has comprehensive emergency response and incident mitigation information for that material, or has immediate access to a person who possesses such knowledge and information. The phone must be monitored on a 24 hour basis at all times when the hazardous materials are in transportation, including during storage

incidental to transportation. The Contractor shall ensure that information regarding this emergency contact and phone number are placed on all hazardous material shipping documents. The Contractor shall designate an emergency coordinator and post the following information at areas in which hazardous wastes are managed:

a. The name of the emergency coordinator.

b. Phone number through which the emergency coordinator can be contacted on a 24 hour basis.

c. The telephone number of the local fire department.

d. The location of fire extinguishers and spill control materials.

Attachment A
SAMPLE OFF-SITE POLICY CERTIFICATION MEMO

Project/Contract #:_____
Waste Stream:_____
Primary TSD Facility, EPA ID # and Location: _____
Alter. TSD Facility, EPA ID # and Location:_____

| EPA Region | Primary Contact | Secondary Contact |
|---|---|---|
| I | (617) 565-9446 | (617) 573-1754 |
| II | (212) 637-4139 | (212) 264-2638 |
| III | (814) 566-3450 | (215) 597-8338 |
| IV | (404) 562-8589 | (404) 347-7603 |
| V | (312) 886-3587 | (312) 886-4445 |
| VI | (214) 665-2282 | (214) 655-2281 |
| VII | (913) 551-7883 | (913) 551-7667 |
| VIII | (303) 312-6419 | (303) 293-1506 |
| IX | (415) 744-2091 | (415) 744-2114 |
| X | (206) 553-1061 | (206) 553-1061 |

EPA representative contacted: _____
EPA representative phone number: _____
Date contacted: _____

Comment: _____
The above EPA representative was contacted on _____. As of that date the above sites were considered acceptable in accordance with the Off-Site Policy in 40 CFR 300.440.

Signature: _____ Date: _____
Phone number: _____

-- End of Section --

SECTION TABLE OF CONTENTS

DIVISION 02 - SITE CONSTRUCTION

SECTION 02220

DEMOLITION

**05/02**

PART 1 GENERAL

1.1 REFERENCES
1.2 GENERAL REQUIREMENTS
1.3 SUBMITTALS
1.4 REGULATORY AND SAFETY REQUIREMENTS
1.4.1 Notifications
1.5 DUST AND DEBRIS CONTROL
1.6 PROTECTION
1.6.1 Traffic Control Signs
1.6.2 Existing Work
1.6.3 Weather Protection
1.6.4 Facilities
1.6.5 Protection of Personnel
1.7 BURNING
1.8 FOREIGN OBJECT DAMAGE (FOD)
1.9 RELOCATIONS
1.10 REQUIRED DATA
1.11 ENVIRONMENTAL PROTECTION
1.12 USE OF EXPLOSIVES
1.13 AVAILABILITY OF WORK AREAS

PART 2 PRODUCTS

PART 3 EXECUTION

3.1 EXISTING FACILITIES TO BE REMOVED
3.1.1 Structures
3.1.2 Utilities and Related Equipment
3.1.3 Paving and Slabs
3.1.4 Air Conditioning Equipment
3.2 DISPOSITION OF MATERIAL
3.2.1 Title to Materials
3.2.2 Reuse of Materials and Equipment
3.2.3 Salvaged Materials and Equipment
3.2.4 Unsalvageable Material
3.3 CLEANUP
3.4 PAVEMENTS
3.4.1 Existing Rigid Pavement
3.4.2 Existing Flexible Pavement
3.4.3 Pavement Protection

-- End of Section Table of Contents --

SECTION 02220

DEMOLITION
**05/02**

PART 1 GENERAL

1.1 REFERENCES

The publications listed below form a part of this specification to the extent referenced. The publications are referred to in the text by the basic designation only.

AMERICAN NATIONAL STANDARDS INSTITUTE (ANSI)

| | |
|---|---|
| ANSI A10.6 | (1990) Safety Requirements for Demolition Operations |

U.S. ARMY CORPS OF ENGINEERS (USACE)

| | |
|---|---|
| EM 385-1-1 | (1996) U.S. Army Corps of Engineers Safety and Health Requirements Manual |

1.2 GENERAL REQUIREMENTS

Do not begin demolition until authorization is received from the Contracting Officer. Remove rubbish and debris from the project site daily; do not allow accumulations inside or outside the buildings or on airfield pavements.The work includes demolition, salvage of identified items and materials, and removal of resulting rubbish and debris. Rubbish and debris shall be removed from Government property daily, unless otherwise directed, to avoid accumulation at the demolition site. Materials that cannot be removed daily shall be stored in areas specified by the Contracting Officer.
In the interest of occupational safety and health, the work shall be performed in accordance with EM 385-1-1, Section 23, Demolition, and other applicable Sections. In the interest of conservation, salvage shall be pursued to the maximum extent possible; salvaged items and materials shall be disposed of as specified.

1.3 SUBMITTALS

Government approval is required for submittals with a "G" designation; submittals not having a "G" designation are for information only or as otherwise designated. When used, a designation following the "G" designation identifies the office that will review the submittal for the Government. The following shall be submitted in accordance with Section 01330 SUBMITTAL PROCEDURES:

SD-03 Product Data

Work Plan; G-AE,

The procedures proposed for the accomplishment of the work. The procedures shall provide for safe conduct of the work, including procedures and methods to provide necessary supports, lateral bracing and shoring when required, careful removal and disposition of materials specified to be salvaged, protection of property

which is to remain undisturbed, coordination with other work in progress, and timely disconnection of utility services. The procedures shall include a detailed description of the methods and equipment to be used for each operation, and the sequence of operations in accordance with EM 385-1-1.

## 1.4 REGULATORY AND SAFETY REQUIREMENTS

Comply with federal, state, and local hauling and disposal regulations. In addition to the requirements of the "Contract Clauses," safety requirements shall conform with ANSI A10.6.

### 1.4.1 Notifications

Furnish timely notification of demolition work to the Contracting Officer in writing 10 working days prior to the commencement of work.

## 1.5 DUST AND DEBRIS CONTROL

Prevent the spread of dust and debris to occupied portions of the airfield pavements and avoid the creation of a nuisance or FOD hazard in the surrounding area. Do not use water if it results in hazardous or objectionable conditions such as, but not limited to, ice, flooding, or pollution. Sweep pavements as often as necessary to control the spread of debris that may result in foreign object damage potential to aircraft or objectionable conditions.

## 1.6 PROTECTION

### 1.6.1 Traffic Control Signs

Where pedestrian, driver and aircraft movement is hampered orsafety is endangered in the area of removal work, use traffic barricades with flashing lights. Anchor barricades in a manner to prevent displacement by wind, jet or prop blast. Notify the Contracting Officer prior to beginning such work.

### 1.6.2 Existing Work

Before beginning any demolition work, the Contractor shall survey the site and examine the drawings and specifications to determine the extent of the work. The Contractor shall take necessary precautions to avoid damage to existing items to remain in place, to be reused, or to remain the property of the Government; any damaged items shall be repaired or replaced as approved by the Contracting Officer. The Contractor shall coordinate the work of this section with all other work and shall construct and maintain shoring, bracing, and supports as required. The Contractor shall ensure that structural elements are not overloaded and shall be responsible for increasing structural supports or adding new supports as may be required as a result of any cutting, removal, or demolition work performed under this contract. Do not overload structural elements and pavements to remain. Provide new supports and reinforcement for existing construction weakened by demolition or removal work. Repairs, reinforcement, or structural replacement must have Contracting Officer approval.

### 1.6.3 Weather Protection

Salvageable materials and equipment shall be protected from weather at all times.

1.6.4 Facilities

Protect electrical and mechanical services and utilities. Where removal of existing utilities and pavement is specified or indicated, provide approved barricades, temporary covering of exposed areas, and temporary services or connections for electrical and mechanical utilities. The Contractor shall ensure that no elements determined to be unstable are left unsupported and shall be responsible for placing and securing bracing, shoring, or lateral supports as may be required as a result of any cutting, removal, or demolition work performed under this contract.

1.6.5 Protection of Personnel

During the demolition work the Contractor shall continuously evaluate the condition of the work being demolished and take immediate action to protect all personnel working in and around the demolition site. No area, section, or component of the demolished infrastructure will be allowed to be left standing without sufficient bracing, shoring, or lateral support to prevent collapse or failure while workmen remove debris or perform other work in the immediate area.

1.7 BURNING

The use of burning at the project site for the disposal of refuse and debris will not be permitted.

1.8 FOREIGN OBJECT DAMAGE (FOD)

Aircraft and aircraft engines are subject to FOD from debris and waste material lying on airfield pavements. Remove all such materials that may appear on operational aircraft pavements due to the Contractor's operations. If necessary, the Contracting Officer may require the Contractor to install a temporary barricade at the Contractor's expense to control the spread of FOD potential debris. The barricade shall consist of a fence covered with a fabric designed to stop the spread of debris; anchor the fence and fabric to prevent displacement by winds or jet/prop blasts. Remove barricade when no longer required.

1.9 RELOCATIONS

Perform the removal and reinstallation of relocated items as indicated with workmen skilled in the trades involved. Repair items to be relocated which are damaged or replace damaged items with new undamaged items as approved by the Contracting Officer.

1.10 REQUIRED DATA

Demolition plan shall include procedures for careful removal and disposition of materials specified to be salvaged, coordination with other work in progress, a disconnection schedule of utility services, a detailed description of methods and equipment to be used for each operation and of the sequence of operations.

1.11 ENVIRONMENTAL PROTECTION

The work shall comply with the requirements of Section 01355A ENVIRONMENTAL PROTECTION.

1.12 USE OF EXPLOSIVES

Use of explosives will not be permitted.

1.13 AVAILABILITY OF WORK AREAS

Areas in which the work is to be accomplished will be available as indicated on the project drawings.

PART 2 PRODUCTS

Not used.

PART 3 EXECUTION

3.1 EXISTING FACILITIES TO BE REMOVED

3.1.1 Structures

Existing structures indicated on the contract drawings to be demolished shall be removed to a depth of 2-feet below grade.Sidewalks, curbs, gutters, pavement and similar shallow infrastructure shall be removed in their entirety within the limits indicated on the contract drawings.

3.1.2 Utilities and Related Equipment

Remove existing utilities as indicated and terminate in a manner conforming to the nationally recognized code covering the specific utility and approved by the Contracting Officer. When utility lines are encountered that are not indicated on the drawings, notify the Contracting Officer and obtain direction prior to further work in that area. Remove meters and related equipment and deliver to a location in accordance with instructions of the Contracting Officer.

3.1.3 Paving and Slabs

Remove concrete and asphaltic concrete paving and slabs including aggregate base as indicated. Provide neat, full depth sawcuts at limits of pavement removal as indicated on the contract drawings.

3.1.4 Air Conditioning Equipment

Remove air conditioning equipment without releasing chlorofluorocarbon refrigerants to the atmosphere in accordance with the Clean Air Act Amendment of 1990.

3.2 DISPOSITION OF MATERIAL

3.2.1 Title to Materials

Except where specified in other sections, all materials and equipment removed, and not reused, shall become the property of the Contractor and shall be removed from Government property. Title to materials resulting from demolition, and materials and equipment to be removed, is vested in the Contractor upon approval by the Contracting Officer of the Contractor's demolition and removal procedures, and authorization by the Contracting Officer to begin demolition. The Government will not be responsible for the condition or loss of, or damage to, such property after contract award. Materials and equipment shall not be viewed by prospective purchasers or

sold on the site.

3.2.2 Reuse of Materials and Equipment

Remove and store materials and equipment indicated to be reused or relocated to prevent damage, and reinstall as the work progresses.

3.2.3 Salvaged Materials and Equipment

Contractor shall salvage items and material to the maximum extent possible.

Material salvaged for the Contractor shall be stored as approved by the Contracting Officer and shall be removed from Government property before completion of the contract. Material salvaged for the Contractor shall not be sold on the site.

3.2.4 Unsalvageable Material

Combustable and noncombustible material, except concrete permitted to remain in place, shall be disposed of in a legally permitted disposal area off the site.

3.3 CLEANUP

Debris and rubbish shall be removed from basement and similar excavations. Debris shall be removed and transported in a manner that prevents spillage on streets or adjacent areas. Local regulations regarding hauling and disposal shall apply.

3.4 PAVEMENTS

3.4.1 Existing Rigid Pavement

Where indicated on the drawings, the existing rigid pavement shall be removed and replaced. The existing rigid pavement removal shall be accomplished by a double sawcut as depicted on the drawings. A sawcut shall be made along all the existing joints to the depth indicated on the drawings. This sawcut shall be accomplished using a standard diamondtype concrete saw. The Contractor shall not overcut into slabs that are to remain. Also, a full-depth sawcut shall be made parallel to the existing accomplished using a wheel saw as specified in paragraph "SAWING EQUIPMENT". All pavement between the diamond-type and wheel sawcuts shall be carefully broken up and removed using hand-held jackhammers, 30 lb or less, or other approved light duty equipment which will not cause stresses to propagate across the outer diamond-type concrete sawcut and cause distress in the pavement which is to remain in place. Upon completion of removal operations the face of the existing pavement to remain, from the surface to the depth on sawcut, shall be clean, sound and essentially vertical. Any pavement beyond the limits of the removal area that is damaged by the Contractor's removal oeprations shall be removed and replaced by and at theContractor's expense, using methods designated for rigid pavement removal and replacement under this contract. All pavement between the two wheel sawcuts shall be removed using methods proposed by the Contractor in his Work Plan submittal. The removal methods shall be demonstrated for approval prior to full production work. Any slab not designated for removal that is found to be damaged by the Contractor's removal methods shall be fully removed and replaced at no cost to the Government.

3.4.2 Existing Flexible Pavement

Where indicated on the drawings, flexible pavement removal shall be intiated by making a full-depth vertical sawcut at the locations indicated on the drawings. Sawcuts shall be accomplished using a standard diamond-type blade saw. The Contractor shall not overcut into flexible pavement that is to remain. Any pavement, beyond the limits of the removal area, damaged by the Contractor's removal operations shall be removed and replaced by and at the Contractor's expense, using methods designated for flexible pavement removal and replacement under this contract. The removal methods shall be demonstrated for approval prior to full production work.

3.4.3 Pavement Protection

The Contractor shall protect the new and existing pavement against all damage prior to final acceptance of the work by the Government. Aggregates and similar construction materials shall not be piled on the new or existing pavements. Traffic shall be excluded from new pavement by erecting and maintaining barricades and signs until the concrete is at least 14 days old, or for a longer period if so directed. If tracked equipment is used, it shall be driven on pads to prevent marking or damaging pavements. Pads shall extend a minimum of 6 inches on each side of each track and shall be lapped a minimum of 3 feet. All new and existing pavement carrying construction traffic or equipment shall be continuously kept clean. Spillage of concrete or other materials shall be cleaned up immediately upon occurrence.

-- End of Section --

SECTION TABLE OF CONTENTS

DIVISION 02 - SITE CONSTRUCTION

SECTION 02300A

EARTHWORK

**12/97**

PART 1 GENERAL

1.1 REFERENCES
1.2 DEFINITIONS
1.2.1 Satisfactory Materials
1.2.2 Unsatisfactory Materials
1.2.3 Cohesionless and Cohesive Materials
1.2.4 Degree of Compaction
1.3 SUBMITTALS
1.4 SUBSURFACE DATA
1.5 CLASSIFICATION OF EXCAVATION
1.6 BLASTING
1.7 UTILIZATION OF EXCAVATED MATERIALS

PART 2 PRODUCTS (Not Applicable)

PART 3 EXECUTION

3.1 STRIPPING OF TOPSOIL
3.1.1 General Excavation
3.1.2 Ditches, Gutters, and Channel Changes
3.1.3 Drainage Structures
3.2 PROPOSED BORROW MATERIAL
3.3 GRADING AREAS
3.4 BACKFILL
3.5 PREPARATION OF GROUND SURFACE FOR EMBANKMENTS
3.5.1 General Requirements
3.5.2 Frozen Material
3.6 EMBANKMENTS
3.6.1 Earth Embankments
3.7 SUBGRADE PREPARATION
3.7.1 Construction
3.7.2 Compaction
3.7.2.1 Subgrade for Pavements
3.7.2.2 Subgrade for Shoulders
3.7.3 Subgrade for Liner
3.8 SHOULDER CONSTRUCTION
3.9 FINISHING
3.10 PLACING TOPSOIL
3.11 TESTING
3.11.1 Fill and Backfill Material Gradation
3.11.2 In-Place Densities
3.11.3 Check Tests on In-Place Densities
3.11.4 Moisture Contents
3.11.5 Optimum Moisture and Laboratory Maximum Density

3.11.6 Tolerance Tests for Subgrades
3.12 SUBGRADE AND EMBANKMENT PROTECTION
3.10 PLACING TOPSOIL

-- End of Section Table of Contents --

SECTION 02300A

EARTHWORK
**12/97**

PART 1 GENERAL

1.1 REFERENCES

The publications listed below form a part of this specification to the extent referenced. The publications are referred to in the text by basic designation only.

AMERICAN ASSOCIATION OF STATE HIGHWAY AND TRANSPORTATION OFFICIALS (AASHTO)

| | |
|---|---|
| AASHTO T 180 | (1997) Moisture-Density Relations of Soils Using a 4.54-kg (10-lb) Rammer and an 457 mm (18-in) Drop |
| AASHTO T 224 | (1996) Correction for Coarse Particles in the Soil Compaction Test |

AMERICAN SOCIETY FOR TESTING AND MATERIALS (ASTM)

| | |
|---|---|
| ASTM C 136 | (1996a) Test Method for Sieve Analysis of Fine and Coarse Aggregates |
| ASTM D 422 | (1963; R 1998) Particle-Size Analysis of Soils |
| ASTM D 1140 | (1997) Amount of Material in Soils Finer than the No. 200 (75-micrometer) Sieve |
| ASTM D 1556 | (1990; R 1996el) Test Method for Density and Unit Weight of Soil in Place by the Sand-Cone Method |
| ASTM D 1557 | (2000) Test Method for Laboratory Compaction Characteristics of Soil Using Modified Effort (56,000 ft-lbf/ft3 (2,700 kN-m/m3)) |
| ASTM D 2167 | (1994) Density and Unit Weight of Soil in Place by the Rubber Balloon Method |
| ASTM D 2487 | (1998) Classification of Soils for Engineering Purposes (Unified Soil Classification System) |
| ASTM D 2922 | (1996el) Density of Soil and Soil-Aggregate in Place by Nuclear Methods (Shallow Depth) |
| ASTM D 3017 | (1988; R 1996el) Test Method for Water |

| | |
|---|---|
| | Content of Soil and Rock in Place by Nuclear Methods (Shallow Depth) |
| ASTM D 4318 | (1998) Liquid Limit, Plastic Limit, and Plasticity Index of Soils |

## 1.2 DEFINITIONS

### 1.2.1 Satisfactory Materials

Satisfactory materials shall comprise any materials classified by ASTM D 2487 as GW, GP, GM, GP-GM, GW-GM, GC, GP-GC, GM-GC, SW, SP, SM, SW-SM, SC, SW-SC, SP-SM, SP-SC, CL and CL-ML. Satisfactory materials for grading shall be comprised of approved soil materials having stones less than 6-inches, except for fill material for pavements and railroads which shall be comprised of approved soil material having stones no greater than 3-inches in any dimension. Soil materials used to construct embankments for containment dikes shall be cohesive materials only as defined herein.

### 1.2.2 Unsatisfactory Materials

Materials which do not comply with the requirements for satisfactory materials are unsatisfactory. Unsatisfactory materials also include man-made fills; trash; refuse; backfills from previous construction; and material classified as satisfactory which contains root and other organic matter or frozen material. The Contracting Officer shall be notified of any contaminated materials.

### 1.2.3 Cohesionless and Cohesive Materials

Cohesionless materials include materials classified in ASTM D 2487 as GW, GP, SW, and SP. Cohesive materials include materials classified as GC, SC, ML, CL, MH, and CH. Materials classified as GM and SM will be identified as cohesionless only when the fines are nonplastic. Testing required for classifying materials shall be in accordance with ASTM D 4318, ASTM C 136, ASTM D 422, and ASTM D 1140.

### 1.2.4 Degree of Compaction

Degree of compaction required, except as noted in the second sentence, is expressed as a percentage of the maximum density obtained by the test procedure presented in ASTM D 1557 abbreviated as a percent of laboratory maximum density. Since ASTM D 1557 applies only to soils that have 30 percent or less by weight of their particles retained on the 3/4 inch sieve, the degree of compaction for material having more than 30 percent by weight of their particles retained on the 3/4 inch sieve shall be expressed as a percentage of the maximum density in accordance with AASHTO T 180 Method D and corrected with AASHTO T 224. To maintain the same percentage of coarse material, the "remove and replace" procedure as described in the NOTE 8 in Paragraph 7.2 of AASHTO T 180 shall be used.

## 1.3 SUBMITTALS

Government approval is required for submittals with a "G" designation; submittals not having a "G" designation are for information only. When used, a designation following the "G" designation identifies the office that will review the submittal for the Government. The following shall be submitted in accordance with Section 01330 SUBMITTAL PROCEDURES:

SD-03 Product Data

Earthwork; G-AE.

Procedure and location for disposal of unused satisfactory material.

Proposed borrow material.

Notification of encountering rock in the project.

Advance notice on the opening of excavation or borrow areas.

Advance notice on shoulder construction for rigid pavements.

Notice regarding placement of all fill or backfill.

Dust & FOD Control Plan

SD-06 Test Reports

Testing; G-AE

Testing Lab.Qualifications of the commercial testing laboratory or Contractor's testing facilities.
Laboratory and field control test results within 24 hours of conclusion of physical tests, including copies of test results, calibration curves and results of calibration tests. Number of copies as specified in Section 1330.

## 1.4 SUBSURFACE DATA

Some subsurface investigation work was performed for this project and is avialable to interested contractors from the Contracting Officer. These data represent the best subsurface information available; however, variations may exist in the subsurface between boring locations.

## 1.5 CLASSIFICATION OF EXCAVATION

No consideration will be given to the nature of the materials, and all excavation will be designated as unclassified excavation.

## 1.6 BLASTING

Blasting will not be permitted.

## 1.7 UTILIZATION OF EXCAVATED MATERIALS

Unsatisfactory materials removed from excavations shall be disposed of in approved off-site waste disposal or spoil areas. Satisfactory material removed from excavations shall be used, insofar as practicable, in the construction of fills, embankments, subgrades, shoulders, as backfill, and for similar purposes. No satisfactory excavated material shall be wasted without specific written authorization. Satisfactory material authorized to be wasted shall be disposed of in approved off-site waste areas as directed. No excavated material shall be disposed of in a manner that obstructs the flow of any stream, endangers a partly finished structure, impairs the efficiency or appearance of any structure, or is detrimental to the completed work in any way.

PART 2 PRODUCTS (Not Applicable)

PART 3 EXECUTION

3.1 STRIPPING OF TOPSOIL

Where indicated or directed, topsoil shall be stripped to a depth of 4-inches. Topsoil shall be spread on areas already graded and prepared for topsoil, or transported and deposited in stockpiles convenient to areas that are to receive application of the topsoil later, or at locations indicated or specified. Topsoil shall be kept separate from other excavated materials, brush, litter, objectionable weeds, roots, stones larger than 2 inches in diameter, and other materials that would interfere with planting and maintenance operations. Any surplus of topsoil from excavations and grading shall be removed from the site.

3.1.1 General Excavation

Record drawings and inspection of the project area shows significant evidence of previous construction, demolition, excavation, filling and backfilling. It is reasonable to assume that various types and quantities of materials will found below the ground surface. The contractor shall include the cost of any soil screening, handling and processing required to bring the material into conformance with these specifications.

The site shall be striped of vegetation, trash, debris in all areas of construction to be excavated, cut, filled, backfilled or graded.

The Contractor shall perform excavation of every type of material encountered within the limits of the project to the lines, grades, and elevations indicated and as specified. Grading shall be in conformity with the typical sections shown and the tolerances specified in paragraph FINISHING. Satisfactory excavated materials shall be transported to and placed in fill or embankment within the limits of the work. Unsatisfactory materials encountered within the limits of the work shall be excavated below grade and replaced with satisfactory materials as directed. Such excavated material and the satisfactory material ordered as replacement shall be included in excavation. Surplus satisfactory excavated material not required for fill or embankment shall be disposed of in off-site areas approved by the Contracting Officer, and provided and paid for by the Contractor. Non-impacted unsatisfactory excavated material shall be disposed of in approved off-site waste disposal or spoil areas arranged for and paid for by the Contractor. During construction, excavation and fill shall be performed in a manner and sequence that will provide proper drainage at all times. Material required for fill or embankment in excess of that produced by excavation within the grading limits shall be excavated from off-site borrow areas approved by the contracting officer and selected by the Contractor as specified.

Workmen assigned to equipment operation, excavation, labor and hauling should be adequately trained to work with and around hydrocarbon products or impacted material. Appropriate hydrocarbon detection and oxygen monitoring equipment and at least one employee trained to operate it shall be on duty at all times during excavation and work within excavations or other spaces where exposure to fuel products or low oxygen environments might exist.

### 3.1.2 Ditches, Gutters, and Channel Changes

Excavation of ditches, gutters, and channel changes shall be accomplished by cutting accurately to the cross sections, grades, and elevations shown. Ditches and gutters shall not be excavated below grades shown. Excessive open ditch or gutter excavation shall be backfilled with satisfactory, thoroughly compacted, material or with suitable stone or cobble to grades shown. Material excavated shall be disposed of as shown or as directed, except that in no case shall material be deposited less than 4 feet from the edge of a ditch. The Contractor shall maintain excavations free from detrimental quantities of leaves, brush, sticks, trash, and other debris until final acceptance of the work.

### 3.1.3 Drainage Structures

Excavations shall be made to the lines, grades, and elevations shown, or as directed. Trenches and foundation pits shall be of sufficient size to permit the placement and removal of forms for the full length and width of structure footings and foundations as shown. Rock or other hard foundation material shall be cleaned of loose debris and cut to a firm, level, stepped, or serrated surface. Loose disintegrated rock and thin strata shall be removed. When concrete or masonry is to be placed in an excavated area, the bottom of the excavation shall not be disturbed. Excavation to the final grade level shall not be made until just before the concrete or masonry is to be placed. Where pile foundations are to be used, the excavation of each pit shall be stopped at an elevation 1 foot above the base of the footing, as specified, before piles are driven. After the pile driving has been completed, loose and displaced material shall be removed and excavation completed, leaving a smooth, solid, undisturbed surface to receive the concrete or masonry.

## 3.2 PROPOSED BORROW MATERIAL

Borrow material shall be selected to meet the requirements and conditions of the particular fill or embankment for which it is to be used. Borrow material shall be obtained from off site borrow areas selected by the Contractor and approved by the contracting officer. Unless specifically provided, no borrow shall be obtained within the limits of the project site without prior written approval except material obtained from cuts made during grading to the indicated sections and contours. Necessary clearing, grubbing, and satisfactory drainage of borrow pits and the disposal of debris thereon shall be considered related operations to the borrow excavation.

## 3.3 GRADING AREAS

Where indicated, work will be divided into grading areas within which satisfactory excavated material shall be placed in embankments, fills, and required backfills. The Contractor shall not haul satisfactory material excavated in one grading area to another grading area except when so directed in writing.

## 3.4 BACKFILL

Backfill adjacent to any and all types of structures shall be placed and compacted to at least 90 percent laboratory maximum density for cohesive materials or 95 percent laboratory maximum density for cohesionless materials to prevent wedging action or eccentric loading upon or against the structure. Ground surface on which backfill is to be placed shall be

prepared as specified in paragraph PREPARATION OF GROUND SURFACE FOR EMBANKMENTS. Compaction requirements for backfill materials shall also conform to the applicable portions of paragraphs PREPARATION OF GROUND SURFACE FOR EMBANKMENTS, EMBANKMENTS, and SUBGRADE PREPARATION, and Section 02630A STORM-DRAINAGE SYSTEM; and Section 02316A EXCAVATION, TRENCHING, AND BACKFILLING FOR UTILITIES SYSTEMS. Compaction shall be accomplished by sheepsfoot rollers, pneumatic-tired rollers, steel-wheeled rollers, vibratory compactors, or other approved equipment.

## 3.5 PREPARATION OF GROUND SURFACE FOR EMBANKMENTS

### 3.5.1 General Requirements

Ground surface on which fill is to be placed shall be stripped of live, dead, or decayed vegetation, rubbish, debris, and other unsatisfactory material; plowed, disked, or otherwise broken up to a depth of 8-inches; pulverized; moistened or aerated as necessary; thoroughly mixed; and compacted to at least 90 percent laboratory maximum density for cohesive materials or 95 percent laboratory maximum density for cohesionless materials. Compaction shall be accomplished by sheepsfoot rollers, pneumatic-tired rollers, steel-wheeled rollers, vibratory compactors, or other approved equipment. The prepared ground surface shall be scarified and moistened or aerated as required just prior to placement of embankment materials to assure adequate bond between embankment material and the prepared ground surface.

### 3.5.2 Frozen Material

Embankment shall not be placed on a foundation which contains frozen material, or which has been subjected to freeze-thaw action. This prohibition encompasses all foundation types, including the natural ground, all prepared subgrades (whether in an excavation or on an embankment) and all layers of previously placed and compacted earth fill which become the foundations for successive layers of earth fill. All material that freezes or has been subjected to freeze-thaw action during the construction work, or during periods of temporary shutdowns, such as, but not limited to, nights, holidays, weekends, winter shutdowns, or earthwork operations, shall be removed to a depth that is acceptable to the Contracting Officer and replaced with new material. Alternatively, the material will be thawed, dried, reworked, and recompacted to the specified criteria before additional material is placed. The Contracting Officer will determine when placement of fill shall cease due to cold weather. The Contracting Officer may elect to use average daily air temperatures, and/or physical observation of the soils for his determination. Embankment material shall not contain frozen clumps of soil, snow, or ice.

## 3.6 EMBANKMENTS

### 3.6.1 Earth Embankments

Earth embankments shall be constructed from satisfactory materials free of organic or frozen material and rocks with any dimension greater than 3 inches. The material shall be placed in successive horizontal layers of loose material not more than 8-inches in depth. Each layer shall be spread uniformly on a soil surface that has been moistened or aerated as necessary, and scarified or otherwise broken up so that the fill will bond with the surface on which it is placed. After spreading, each layer shall be plowed, disked, or otherwise broken up; moistened or aerated as necessary; thoroughly mixed; and compacted to at least 90 percent

laboratory maximum density for cohesive materials or 95 percent laboratory maximum density for cohesionless materials. Compaction requirements for the upper portion of earth embankments forming subgrade for pavements shall be identical with those requirements specified in paragraph SUBGRADE PREPARATION. Compaction shall be accomplished by sheepsfoot rollers, pneumatic-tired rollers, steel-wheeled rollers, vibratory compactors, or other approved equipment.

## 3.7 SUBGRADE PREPARATION

### 3.7.1 Construction

Subgrade shall be shaped to line, grade, and cross section, and compacted as specified. This operation shall include plowing, disking, and any moistening or aerating required to obtain specified compaction. Soft or otherwise unsatisfactory material shall be removed and replaced with satisfactory excavated material or other approved material as directed. Rock encountered in the cut section shall be excavated to a depth of 6 inches below finished grade for the subgrade. Low areas resulting from removal of unsatisfactory material or excavation of rock shall be brought up to required grade with satisfactory materials, and the entire subgrade shall be shaped to line, grade, and cross section and compacted as specified. The elevation of the finish subgrade shall not vary more than 0.05 foot from the indicated grade and cross section.

### 3.7.2 Compaction

Compaction shall be accomplished by sheepsfoot rollers, pneumatic-tired rollers, steel-wheeled rollers, vibratory compactors, or other approved equipment. Each layer of fill shall be compacted to at least 90 percent of laboratory maximum density.

#### 3.7.2.1 Subgrade for Pavements

A. Compacting Fill Sections: Fills composed of soil having a plasticity indes (PI) greater than 5 or a liquid limit (LL) greater than 25 shall be compacted to not less than 90 percent of ASTM D 1557 maximum density. Fills composed of soil having a PI equal to or less than 5 and a LL equal to or less than 25 will be shall be compacted as follows:

1. The top 6-inches to 100 percent of ASTM D 1557
2. Below 6-inches, 95 percent of ASTM D 1557

B. Compacting Cut Sections: The top 6-inches of subgrades composed of soil having a PI greater than 5 or a LL greater than 25 shall be compacted to not less than 90 percent of ASTM D 1557 maximum density. If the natural subgrade exhibits densities equal to or greater than 90 percent of other ASTM D 1557 maximum density, no compaction is necessary other than that required to provide a smooth surface. Soils having a PI equal to or less than 5 and a LL equal to or less than 25 shall be compacted as follows:

1. The top 6-inches shall be 100 percent of ASTM D 1557 maximum density
2. The 18-inches below the top 6-inches shall be 95 percent of ASTM D 1557 maximum.

When more than one soil classification is present in the subgrade, the top 6-inches of subgrade shall be scarified, windrowed, thoroughly blended, reshaped, and compacted.

#### 3.7.2.2 Subgrade for Shoulders

The top 6 inches of subgrade for paved shoulders shall be compacted to at

least 95 percent of the laboratory maximum density for the full depth of the shoulder. The top 12-inches of unpaved earthen shoulders shall be compacted to at least 95 percent of ASTM D 1557 maximum.

3.7.3 Subgrade for Liner

Subgrade for liner specified in Section 02372A "Containment Liner" shall be compacted to 95 percent of ASTM D 1557 maximum density and be screened or otherwised processed so that the top 6-inches of material is free of organic matter, trash, metal, concrete, and aggregate or any other material retained by a 1/2-inch seive.

3.8 SHOULDER CONSTRUCTION

Shoulders shall be constructed of satisfactory excavated or borrow material or as otherwise shown or specified. Shoulders shall be constructed as soon as possible after adjacent paving is complete, but in the case of rigid pavements, shoulders shall not be constructed until permission of the Contracting Officer has been obtained. The entire shoulder area shall be compacted to at least the percentage of maximum density as specified in paragraph SUBGRADE PREPARATION above, for specific ranges of depth below the surface of the shoulder. Compaction shall be accomplished by sheepsfoot rollers, pneumatic-tired rollers, steel-wheeled rollers, vibratory compactors, or other approved equipment. Shoulder construction shall be done in proper sequence in such a manner that adjacent ditches will be drained effectively and that no damage of any kind is done to the adjacent completed pavement. The completed shoulders shall be true to alignment and grade and shaped to drain in conformity with the cross section shown.

3.9 FINISHING

The surface of excavations, embankments, and subgrades shall be finished to a smooth and compact surface in accordance with the lines, grades, and cross sections or elevations shown. The degree of finish for graded areas shall be within 0.1 foot of the grades and elevations indicated except that the degree of finish for subgrades shall be specified in paragraph SUBGRADE PREPARATION. Gutters and ditches shall be finished in a manner that will result in effective drainage.

3.10 PLACING TOPSOIL

On areas to receive topsoil, the compacted subgrade soil shall be scarified to a 2-inch depth for bonding of topsoil with subsoil. Topsoil then shall be spread evenly to a thickness of 4-inches and graded to the elevations and slopes shown. Topsoil shall not be spread when frozen or excessively wet or dry. Material required for topsoil in excess of that produced by excavation within the grading limits shall be obtained from offsite areas.

3.11 TESTING

Testing shall be performed by an approved commercial testing laboratory or by the Contractor subject to approval. If the Contractor elects to establish testing facilities, no work requiring testing will be permitted until the Contractor's facilities have been inspected and approved by the Contracting Officer. Field in-place density shall be determined in accordance with ASTM D 2922. When ASTM D 2922 is used, the calibration curves shall be checked and adjusted using only the sand cone method ASTM D

2167 as described in ASTM D 1556. ASTM D 2922 results in a wet unit weight of soil and when using this method ASTM D 3017 shall be used to determine the moisture content of the soil. The calibration curves furnished with the moisture gauges shall also be checked along with density calibration checks as described in ASTM D 3017; the calibration checks of both the density and moisture gauges shall be made at the beginning of a job on each different type of material encountered and at intervals as directed by the Contracting Officer. When test results indicate, as determined by the Contracting Officer, that compaction is not as specified, the material shall be removed, replaced and recompacted to meet specification requirements. Tests on recompacted areas shall be performed to determine conformance with specification requirements. Inspections and test results shall be certified by a registered professional civil engineer. These certifications shall state that the tests and observations were performed by or under the direct supervision of the engineer and that the results are representative of the materials or conditions being certified by the tests. The following number of tests, if performed at the appropriate time, will be the minimum acceptable for each type operation.

3.11.1 Fill and Backfill Material Gradation

One test per 2000 cubic yards stockpiled or in-place source material. Gradation of fill and backfill material shall be determined in accordance with ASTM C 136, ASTM D 422, and ASTM D 1140. An additional test shall be taken for each differing soil type ecountered during excavation and placement of fill, including blended material obtained from stratified material layers or differing sources of borrow from on-site or off-site.

3.11.2 In-Place Densities

a. One test per 1000 square feet, or fraction thereof, of each lift of fill or backfill areas compacted by other than hand-operated machines.

b. One test per 500 square feet, or fraction thereof, of each lift of fill or backfill areas compacted by hand-operated machines.

c. One test per 500 square feet, or fraction thereof, of each lift of embankment or backfill for roads and airfields.

d. One test per 200 square feet, or fraction thereof, of each lift of dike embankments.

3.11.3 Check Tests on In-Place Densities

If ASTM D 2922 is used, in-place densities shall be checked by ASTM D 1556 as follows:

a. One check test per every 10 tests performed by ASTM D 2922

3.11.4 Moisture Contents

In the stockpile, excavation, or borrow areas, a minimum of two tests per day per type of material or source of material being placed during stable weather conditions shall be performed. During unstable weather, tests shall be made as dictated by local conditions and approved by the Contracting Officer.

3.11.5 Optimum Moisture and Laboratory Maximum Density

Tests shall be made for each type material or source of material including borrow material to determine the optimum moisture and laboratory maximum density values. One representative test per 2000 cubic yards of fill and backfill, or when any change in material occurs which may affect the optimum moisture content or laboratory maximum density. The soil moisture content during placement shall be maintained within the range necessary to obtain the specified compaction, typically from 2% above optimum to 2% below optimum.

3.11.6 Tolerance Tests for Subgrades

Continuous checks on the degree of finish specified in paragraph SUBGRADE PREPARATION shall be made during construction of the subgrades.

3.12 SUBGRADE AND EMBANKMENT PROTECTION

During construction, embankments and excavations shall be kept shaped and drained. Ditches and drains along subgrade shall be maintained to drain effectively at all times. The finished subgrade shall not be disturbed by traffic or other operation and shall be protected and maintained by the Contractor in a satisfactory condition until ballast, subbase, base, or pavement is placed. The storage or stockpiling of materials on the finished subgrade will not be permitted. No subbase, base course, ballast, or pavement shall be laid until the subgrade has been checked and approved, and in no case shall subbase, base, surfacing, pavement, or ballast be placed on a muddy, spongy, or frozen subgrade.3.10 PLACING TOPSOIL

On areas to receive topsoil, the compacted subgrade soil shall be scarified to a 2-inch depth for bonding of topsoil with subsoil. Topsoil then shall be spread evenly to a thickness of 4-inches and graded to the elevations and slopes shown. Topsoil shall not be spread when frozen or excessively wet or dry. Material required for topsoil in excess of that produced by excavation within the grading limits shall be obtained from offsite areas.

-- End of Section --

SECTION TABLE OF CONTENTS

DIVISION 02 - SITE CONSTRUCTION

SECTION 02315A

EXCAVATION, FILLING AND BACKFILLING FOR BUILDINGS

**08/98**

PART 1 GENERAL

1.1 REFERENCES
1.2 DEGREE OF COMPACTION
1.3 SUBMITTALS

PART 2 PRODUCTS

2.1 MATERIALS
2.1.1 Satisfactory Materials
2.1.2 Unsatisfactory Materials
2.1.3 Cohesionless and Cohesive Materials
2.1.4 Nonfrost Susceptible (NFS) Material
2.2 AGGREGATE BASE COURSE

PART 3 EXECUTION

3.1 CLEARING AND GRUBBING
3.2 TOPSOIL
3.3 EXCAVATION
3.4 DRAINAGE AND DEWATERING
3.4.1 Drainage
3.4.2 Dewatering
3.5 SHORING
3.6 CLASSIFICATION OF EXCAVATION
3.7 BLASTING
3.8 UTILITY AND DRAIN TRENCHES
3.9 BORROW
3.10 EXCAVATED MATERIALS
3.11 FINAL GRADE OF SURFACES TO SUPPORT CONCRETE
3.12 SUBGRADE PREPARATION
3.13 FILLING AND BACKFILLING
3.14 TESTING
3.14.1 In-Place Densities
3.14.1.1 In-Place Density of Subgrades
3.14.1.2 In-Place Density of Fills and Backfills
3.14.2 Moisture Content
3.14.3 Optimum Moisture and Laboratory Maximum Density
3.15 GRADING
3.16 SPREADING TOPSOIL
3.17 PROTECTION

-- End of Section Table of Contents --

SECTION 02315A

EXCAVATION, FILLING AND BACKFILLING FOR BUILDINGS
08/98

PART 1 GENERAL

1.1 REFERENCES

The publications listed below form a part of this specification to the extent referenced. The publications are referred to in the text by basic designation only.

AMERICAN SOCIETY FOR TESTING AND MATERIALS (ASTM)

| | |
|---|---|
| ASTM C 33 | (1999aE1) Specification for Concrete Aggregates |
| ASTM D 1556 | (1990; R 1996el) Test Method for Density and Unit Weight of Soil in Place by the Sand-Cone Method |
| ASTM D 1557 | (2000) Test Method for Laboratory Compaction Characteristics of Soil Using Modified Effort (56,000 ft-lbf/ft3 (2,700 kN-m/m3)) |
| ASTM D 2216 | (1998) Laboratory Determination of Water (Moisture) Content of Soil and Rock |
| ASTM D 2487 | (1998) Classification of Soils for Engineering Purposes (Unified Soil Classification System) |
| ASTM D 2922 | (1996el) Density of Soil and Soil-Aggregate in Place by Nuclear Methods (Shallow Depth) |
| ASTM D 3017 | (1988; R 1996el) Test Method for Water Content of Soil and Rock in Place by Nuclear Methods (Shallow Depth) |

1.2 DEGREE OF COMPACTION

Degree of compaction is expressed as a percentage of the maximum density obtained by the test procedure presented in ASTM D 1557, abbreviated as percent laboratory maximum density.

1.3 SUBMITTALS

Government approval is required for submittals with a "G" designation; submittals not having a "G" designation are for information only. When

used, a designation following the "G" designation identifies the office that will review the submittal for the Government. The following shall be submitted in accordance with Section 01330 SUBMITTAL PROCEDURES:

SD-06 Test Reports

Testing;

Copies of all laboratory and field test reports within 24 hours of the completion of the test.

PART 2 PRODUCTS

2.1 MATERIALS

2.1.1 Satisfactory Materials

Satisfactory materials shall comprise any materials classified by ASTM D 2487 as GW, GP, GM, GP-GM, GW-GM, GC, GP-GC, GM-GC, SW, SP, SM, SW-SM, SC, CL, ML, .

2.1.2 Unsatisfactory Materials

Materials which do not comply with the requirements for satisfactory materials are unsatisfactory. Unsatisfactory materials also include man-made fills, trash, refuse, or backfills from previous construction. Unsatisfactory material also includes material classified as satisfactory which contains root and other organic matter, frozen material, and stones larger than 3 inches. The Contracting Officer shall be notified of any contaminated materials.

2.1.3 Cohesionless and Cohesive Materials

Cohesionless materials include materials classified in ASTM D 2487 as GW, GP, SW, and SP. Cohesive materials include materials classified as GC, SC, ML, CL, MH, and CH. Materials classified as GM, GP-GM, GW-GM, SW-SM, SP-SM, and SM shall be identified as cohesionless only when the fines are nonplastic.

2.1.4 Nonfrost Susceptible (NFS) Material

Nonfrost susceptible material shall be a uniformly graded washed sand with a maximum particle size of 3/8 inch and less than 5 percent passing the No. 200 size sieve, and with not more than 3 percent by weight finer than 0.02 mm grain size.

2.2 AGGREGATE BASE COURSE

AGGREGATE BASE COURSE SHALL CONFORM TO ASTM C 33 TYPE 57 MATERIAL

PART 3 EXECUTION

3.1 CLEARING AND GRUBBING

The areas within lines 5 feet outside of each building and structure line shall be cleared and grubbed of trees, stumps, roots, brush and other vegetation, debris, existing foundations, pavements, utility lines, structures, fences, and other items that would interfere with construction operations. Stumps, logs, roots, and other organic matter shall be

completely removed and the resulting depressions shall be filled with satisfactory material, placed and compacted in accordance with paragraph FILLING AND BACKFILLING. Materials removed shall be disposed of outside the limits of Government-controlled property at the Contractor's responsibility.

## 3.2 TOPSOIL

Topsoil shall be stripped to a depth of 6 inches below existing grade within the designated excavations and grading lines and deposited in storage piles for later use. Excess topsoil shall be disposed as specified for excess excavated material.

## 3.3 EXCAVATION

Excavation shall conform to the dimensions and elevations indicated for each building, structure, and footing except as specified, and shall include trenching for utility and foundation drainage systems to a point 5 feet beyond the building line of each building and structure, and all work incidental thereof. Required limits of over-excavation are shown on the drawings. Excavations below indicated depths will not be permitted except to remove unsatisfactory material. Unsatisfactory material encountered below the grades shown shall be removed as directedby the Contracting Officer and replaced with satisfactory material; and payment will be made in conformance with the CHANGES clause of the CONTRACT CLAUSES. Satisfactory material removed below the depths indicated, without specific direction of the Contracting Officer, shall be replaced, at no additional cost to the Government. Satisfactory material shall be placed and compacted as specified in paragraph FILLING AND BACKFILLING. Determination of elevations and measurements of approved overdepth excavation of unsatisfactory material below grades indicated shall be done under the direction of the Contracting Officer.

## 3.4 DRAINAGE AND DEWATERING

### 3.4.1 Drainage

Surface water shall be directed away from excavation and construction sites to prevent erosion and undermining of foundations. Diversion ditches, dikes and grading shall be provided and maintained as necessary during construction. Excavated slopes and backfill surfaces shall be protected to prevent erosion and sloughing. Excavation shall be performed so that the site, the area immediately surrounding the site, and the area affecting operations at the site shall be continually and effectively drained.

### 3.4.2 Dewatering

Groundwater flowing toward or into excavations shall be controlled to prevent sloughing of excavation slopes and walls, boils, uplift and heave in the excavation and to eliminate interference with orderly progress of construction. French drains, sumps, ditches or trenches will not be permitted within 3 feet of the foundation of any structure, except with specific written approval, and after specific contractual provisions for restoration of the foundation area have been made. Control measures shall be taken by the time the excavation reaches the water level in order to maintain the integrity of the in situ material. While the excavation is open, the water level shall be maintained continuously, at least 3 feet below the working level.

3.5 SHORING

Shoring, including sheet piling, shall be furnished and installed as necessary to protect workmen, banks, adjacent paving, structures, and utilities in accordance with 29 CFR 1026 Support P and all other applicable State or Corps of Engineer regulations. Shoring, bracing, and sheeting shall be removed as excavations are backfilled, in a manner to prevent caving. Shoring systems shall be designed by a Registered Professional Engineer and approved by the Corp of Engineers

3.6 CLASSIFICATION OF EXCAVATION

Excavation will be unclassified regardless of the nature of material encountered.

3.7 BLASTING

Blasting will not be permitted.

3.8 UTILITY AND DRAIN TRENCHES

Trenches for underground utilities systems and drain lines shall be excavated to the required alignments and depths. The bottoms of trenches shall be graded to secure the required slope and shall be tamped if necessary to provide a firm pipe bed. Recesses shall be excavated to accommodate bells and joints so that pipe will be uniformly supported for the entire length. Rock, where encountered, shall be excavated to a depth of at least 6 inches below the bottom of the pipe, and the overdepth shall be backfilled with satisfactory material placed and compacted in conformance with paragraph FILLING AND BACKFILLING.

3.9 BORROW

Where satisfactory materials are not available in sufficient quantity from required excavations, approved materials shall be obtained from approved sources at the Contractor's expense..

3.10 EXCAVATED MATERIALS

Satisfactory excavated material required for fill or backfill shall be placed in the proper section of the permanent work required under this section or shall be separately stockpiled if it cannot be readily placed. Satisfactory material in excess of that required for the permanent work and all unsatisfactory material shall be disposed of as outside the limits of Government-controlled property.

3.11 FINAL GRADE OF SURFACES TO SUPPORT CONCRETE

For pile foundations, the excavation shall be completed to the bottom of subbase as shown on the plans before driving the piles.

3.12 SUBGRADE PREPARATION

Unsatisfactory material, such as high plasticity clay with an LL greater than 50, in surfaces to receive fill or in excavated areas shall be removed and replaced with satisfactory materials as directed by the Contracting Officer. The surface shall be scarified to a depth of 6 inches before the fill is started. Sloped surfaces steeper than 1 vertical to 4 horizontal shall be plowed, stepped, benched, or broken up so that the fill material

will bond with the existing material. When subgrades are less than the specified density, the ground surface shall be broken up to a minimum depth of 6 inches, pulverized, and compacted to the specified density. When the subgrade is part fill and part excavation or natural ground, the excavated or natural ground portion shall be scarified to a depth of 12 inches and compacted as specified for the adjacent fill. Material shall not be placed on surfaces that are muddy, frozen, or contain frost. Compaction shall be accomplished by sheepsfoot rollers, pneumatic-tired rollers, steel-wheeled rollers, or other approved equipment well suited to the soil being compacted. Material shall be moistened or aerated as necessary to plus or minus 2 percent of optimum moisture . Minimum subgrade density shall be as specified in paragraph FILLING AND BACKFILLING.

## 3.13 FILLING AND BACKFILLING

Satisfactory materials shall be used in bringing fills and backfills to the lines and grades indicated and for replacing unsatisfactory materials. Satisfactory materials shall be placed in horizontal layers not exceeding 8 inches in loose thickness, or 6 inches when hand-operated compactors are used. After placing, each layer shall be plowed, disked, or otherwise broken up, moistened or aerated as necessary, thoroughly mixed and compacted as specified. Backfilling shall not begin until construction below finish grade has been approved, underground utilities systems have been inspected, tested and approved, forms removed, and the excavation cleaned of trash and debris. Backfill shall be brought to indicated finish grade . Backfill shall not be placed in wet or frozen areas. Where pipe is coated or wrapped for protection against corrosion, the backfill material up to an elevation 2 feet above sewer lines and 1 foot above other utility lines shall be free from stones larger than 1 inch in any dimension. Heavy equipment for spreading and compacting backfill shall not be operated closer to foundation or retaining walls than a distance equal to the height of backfill above the top of footing; the area remaining shall be compacted in layers not more than 4 inches in compacted thickness with power-driven hand tampers suitable for the material being compacted. Backfill shall be placed carefully around pipes or tanks to avoid damage to coatings, wrappings, or tanks. Backfill shall not be placed against foundation walls prior to 7 days after completion of the walls. As far as practicable, backfill shall be brought up evenly on each side of the wall and sloped to drain away from the wall. Each layer of fill and backfill shall be compacted to not less than the percentage of maximum density specified below:

| | Percent Laboratory maximum density | |
|---|---|---|
| | Cohesive material | Cohesionless material |
| Fill, embankment, and backfill | | |
| Under structures, building slabs, steps, paved areas, around footings, and in trenches | 90 | 95 |
| Under sidewalks and grassed areas | 85 | 90 |

| | Percent Laboratory maximum density | |
|---|---|---|
| | Cohesive material | Cohesionless material |
| Nonfrost susceptible materials | | 95 |
| Subgrade | | |
| Under building slabs, steps, and paved areas, top 12 inches | 90 | 95 |
| Under sidewalks, top 6 inches | 85 | 90 |

Approved compacted subgrades that are disturbed by the Contractor's operations or adverse weather shall be scarified and compacted as specified herein before to the required density prior to further construction thereon. Recompaction over underground utilities and heating lines shall be by hand tamping.

## 3.14 TESTING

Testing shall be the responsibility of the Contractor and shall be performed at no additional cost to the Government. Testing shall be performed by an approved commercial testing laboratory or may be performed by the Contractor subject to approval. Field in-place density shall be determined in accordance with ASTM D 1556, , or ASTM D 2922. When ASTM D 2922 is used, the calibration curves shall be checked and adjusted if necessary by the procedure described in ASTM D 2922, paragraph ADJUSTING CALIBRATION CURVE. ASTM D 2922 results in a wet unit weight of soil and when using this method ASTM D 3017 shall be used to determine the moisture content of the soil. The calibration curves furnished with the moisture gauges shall also be checked along with density calibration checks as described in ASTM D 3017. The calibration checks of both the density and moisture gauges shall be made at the beginning of a job on each different type of material encountered and at intervals as directed by the Contracting Officer. The following number of tests, if performed at the appropriate time, shall be the minimum acceptable for each type operation.

### 3.14.1 In-Place Densities

In-place density and moisture content test results shall be included with the Contractor's daily construction quality control reports.

#### 3.14.1.1 In-Place Density of Subgrades

One test per 4,000 square foot or fraction thereof.

#### 3.14.1.2 In-Place Density of Fills and Backfills

One test per 4,000 square foot or fraction thereof of each lift for fill or backfill areas compacted by other than hand or hand-operated machines. The density for each lift of fill or backfill materials for trenches, pits, building perimeters or other structures or areas less than 5 feet in width, which are compacted with hand or hand-operated machines shall be

tested as follows: One test per each area less than 2,000 square feet, or one test for each 100 linear foot of long narrow fills 200 feet or more in length. If ASTM D 2922 is used, in-place densities shall be checked by ASTM D 1556 as follows: One check per lift for each 100 linear feet of long narrow fills, and a minimum of 2 checks per lift for other fill and backfill areas.

3.14.2 Moisture Content

In the stockpile, excavation or borrow areas, a minimum of two tests per day per type of material or source of materials being placed is required during stable weather conditions. During unstable weather, tests shall be made as dictated by local conditions and approved moisture content shall be tested in accordance with ASTM D 2216.

3.14.3 Optimum Moisture and Laboratory Maximum Density

Tests shall be made for each type material or source of material, including borrow material to determine the optimum moisture and laboratory maximum density values. One representative test per 2,000 cubic yards of fill and backfill, or when any change in material occurs which may affect the optimum moisture content or laboratory maximum density will be made.

3.15 GRADING

Areas within 5 feet outside of each building and structure line shall be constructed true-to-grade, shaped to drain, and shall be maintained free of trash and debris until final inspection has been completed and the work has been accepted.

3.16 SPREADING TOPSOIL

Areas outside the building lines from which topsoil has been removed shall be topsoiled. The surface shall be free of materials that would hinder planting or maintenance operations. The subgrade shall be pulverized to a depth of 2 inches by disking or plowing for the bonding of topsoil with the subsoil. Topsoil shall then be uniformly spread, graded, and compacted to the thickness, elevations, slopes shown, and left free of surface irregularities. Topsoil shall be compacted by one pass of a cultipacker, roller, or other approved equipment weighing 100 to 160 pounds per linear foot of roller. Topsoil shall not be placed when the subgrade is frozen, excessively wet, extremely dry, or in a condition otherwise detrimental to seeding, planting, or proper grading.

3.17 PROTECTION

Settlement or washing that occurs in graded, topsoiled, or backfilled areas prior to acceptance of the work, shall be repaired and grades reestablished to the required elevations and slopes.

-- End of Section --

SECTION TABLE OF CONTENTS

DIVISION 02 - SITE CONSTRUCTION

SECTION 02316A

EXCAVATION, TRENCHING, AND BACKFILLING FOR UTILITIES SYSTEMS

**05/02**

PART 1 GENERAL

1.1 REFERENCES
1.2 DEGREE OF COMPACTION
1.3 SUBMITTALS

PART 2 PRODUCTS

2.1 MATERIALS
2.1.1 Satisfactory Materials
2.1.2 Unsatisfactory Materials
2.1.3 Cohesionless and Cohesive Materials
2.1.4 Unstable Material
2.1.5 Select Granular Material
2.1.6 Initial Backfill Material
2.1.7 Flowable Fill
2.2 PLASTIC MARKING TAPE

PART 3 EXECUTION

3.1 EXCAVATION
3.1.1 Trench Excavation Requirements
3.1.1.1 Bottom Preparation
3.1.1.2 Removal of Unyielding Material
3.1.1.3 Removal of Unstable Material
3.1.1.4 Excavation for Appurtenances
3.1.1.5 Jacking, Boring, and Tunneling
3.1.2 Stockpiles
3.2 BACKFILLING AND COMPACTION
3.2.1 Trench Backfill
3.2.1.1 Replacement of Unyielding Material
3.2.1.2 Replacement of Unstable Material
3.2.1.3 Bedding and Initial Backfill
3.2.1.4 Final Backfill
3.2.2 Backfill for Appurtenances
3.3 SPECIAL REQUIREMENTS
3.3.1 Water Lines
3.3.2 Electrical Distribution System
3.3.3 Plastic Marking Tape
3.4 TESTING
3.4.1 Testing Facilities
3.4.2 Testing of Backfill Materials
3.4.3 Field Density Tests
3.4.4 Displacement of Sewers

-- End of Section Table of Contents --

SECTION 02316A

EXCAVATION, TRENCHING, AND BACKFILLING FOR UTILITIES SYSTEMS
**05/02**

PART 1 GENERAL

1.1 REFERENCES

The publications listed below form a part of this specification to the extent referenced. The publications are referred to in the text by basic designation only.

AMERICAN SOCIETY FOR TESTING AND MATERIALS (ASTM)

| | |
|---|---|
| ASTM D 1556 | (1990; R 1996el) Test Method for Density and Unit Weight of Soil in Place by the Sand-Cone Method |
| ASTM D 1557 | (2000) Test Method for Laboratory Compaction Characteristics of Soil Using Modified Effort (56,000 ft-lbf/ft3 (2,700 kN-m/m3)) |
| ASTM D 2167 | (1994) Density and Unit Weight of Soil in Place by the Rubber Balloon Method |
| ASTM D 2487 | (1998) Classification of Soils for Engineering Purposes (Unified Soil Classification System) |
| ASTM D 2922 | (1996el) Density of Soil and Soil-Aggregate in Place by Nuclear Methods (Shallow Depth) |
| ASTM D 3017 | (1988; R 1996el) Test Method for Water Content of Soil and Rock in Place by Nuclear Methods (Shallow Depth) |

1.2 DEGREE OF COMPACTION

Degree of compaction shall be expressed as a percentage of the maximum density obtained by the test procedure presented in ASTM D 1557.

1.3 SUBMITTALS

Government approval is required for submittals with a "G" designation; submittals not having a "G" designation are for information only. When used, a designation following the "G" designation identifies the office that will review the submittal for the Government. The following shall be submitted in accordance with Section 01330 SUBMITTAL PROCEDURES:

SD-06 Test Reports

Field Density Tests; G-AE

Testing of Backfill Materials; G-AE

Copies of all laboratory and field test reports within 24 hours of the completion of the test.

PART 2 PRODUCTS

2.1 MATERIALS

2.1.1 Satisfactory Materials

Satisfactory materials shall comprise any materials classified by ASTM D 2487 as specified in section 2300A EARTHWORK.

2.1.2 Unsatisfactory Materials

Materials specified as unsatisfactory in section 2300A EARTHWORK.

2.1.3 Cohesionless and Cohesive Materials

Cohesionless materials shall include materials classified in ASTM D 2487 as GW, GP, SW, and SP. Cohesive materials shall include materials classified as GC, SC, ML, CL, MH, and CH. Materials classified as GM and SM shall be identified as cohesionless only when the fines are nonplastic.

2.1.4 Unstable Material

Unstable material shall consist of materials too wet to properly support the utility pipe, conduit, or appurtenant structure.

2.1.5 Select Granular Material

Select granular material shall consist of well-graded sand, gravel, crushed gravel, crushed stone or crushed slag composed of hard, tough and durable particles, and shall contain not more than 10 percent by weight of material passing a No. 200 mesh sieve and no less than 100 percent by weight passing the 1 inch sieve. The maximum allowable aggregate size shall be 1 inch, or the maximum size recommended by the pipe manufacturer, whichever is smaller.

2.1.6 Initial Backfill Material

Initial backfill for utilities other than fuel piping shall consist of select granular material or satisfactory materials free from rocks 1 inch or larger in any dimension or free from rocks of such size as recommended by the pipe manufacturer, whichever is smaller. When non-fuel pipe is coated or wrapped for corrosion protection, the initial backfill material (pipe bedding) shall be fine aggregate (sand) conforming to ASTM C33. All fuel piping shall be backfilled with flowable fill as specified in 2.1.7.

2.1.7 Flowable Fill

Flowable fill, also known as Controlled Low Strength Materials (CLSM), shall be used for backfill of all fuel piping within the bedding envelope shown on the project drawings. Flowable fill may be used in place of other approved or specified bedding material for other types of piping at the contractor's discretion. A flowable fill design mix shall be developed by an independent testing laboratory retained and paid by the Contractor. Mix shall consist of sand conforming to ASTM C33 or C144, fly ash conforming to

ASTM C618, Portland cement conforming to ASTM C150 or other materials approved by the engineer and have a 28 day compressive strength of not less than 25 psi or more than 100 psi. The objective of this material is to provide a flowable material that will completely fill spaces around pipe and structures and develop adequate strength to support loads while remaining easily excavatable. Mixes that produce 28 day compressive strengths consistently above 100 psi are unacceptable. Slump at time of placement shall not exceed 7 inch. In general, the water content in the mix should not be so high that it hydraulically inhibits consolidation of the material.

## 2.2 PLASTIC MARKING TAPE

Plastic marking tape shall be acid and alkali-resistant polyethylene film, 6 inches wide with minimum thickness of 0.004 inch. Tape shall have a minimum strength of 1750 psi lengthwise and 1500 psi crosswise. The tape shall be manufactured with integral wires, foil backing or other means to enable detection by a metal detector when the tape is buried up to 3 feet deep. The tape shall be of a type specifically manufactured for marking and locating underground utilities. The metallic core of the tape shall be encased in a protective jacket or provided with other means to protect it from corrosion. Tape color shall be as specified in TABLE 1 and shall bear a continuous printed inscription describing the specific utility.

TABLE 1. Tape Color

| | |
|---|---|
| Red: | Electric |
| Yellow: | Gas, Oil, Dangerous Materials |
| Orange: | Telephone, Telegraph, Television, Police, and Fire Communications |
| Blue: | Water Systems |
| Green: | Sewer Systems |

# PART 3 EXECUTION

## 3.1 EXCAVATION

Excavation shall be performed to the lines and grades indicated. During excavation, material satisfactory for backfilling shall be stockpiled in an orderly manner at a distance required by OSHA 29 CFR Part 1926. Excavated material not required or not satisfactory for backfill shall be removed from the site. Grading shall be done as may be necessary to prevent surface water from flowing into the excavation, and any water accumulating shall be removed to maintain the stability of the bottom and sides of the excavation. Unauthorized overexcavation shall be backfilled in accordance with paragraph BACKFILLING AND COMPACTION at no additional cost to the Government.

### 3.1.1 Trench Excavation Requirements

The trench shall be excavated as recommended by the manufacturer of the pipe to be installed. Trench walls below the top of the pipe shall be sloped, or made vertical, and of such width as recommended in the manufacturer's installation manual. Trench walls shall be verticle, sloped, stepped, shored, braced, sheeted or otherwise supported and excavated as necessary to protect workers, new work and existing facilities in accordance with 29 CFR Part 1926 - Safety and Health Regulations for Construction. The trench width below the top of pipe shall not exceed 24 inches plus pipe outside diameter (O.D.) for pipes of less than 24 inches

inside diameter and shall not exceed 36 inches plus pipe outside diameter for sizes larger than 24 inches inside diameter. Where recommended trench widths are exceeded, redesign, stronger pipe, or special installation procedures shall be utilized by the Contractor. The cost of redesign, stronger pipe, or special installation procedures shall be borne by the Contractor without any additional cost to the Government.

3.1.1.1 Bottom Preparation

The bottoms of trenches shall be accurately graded to provide uniform bearing and support for the bottom quadrant of each section of the pipe. Bell holes shall be excavated to the necessary size at each joint or coupling to eliminate point bearing. Stones of 1 inches or greater in any dimension, or as recommended by the pipe manufacturer, whichever is smaller, shall be removed to avoid point bearing.

3.1.1.2 Removal of Unyielding Material

Where unyielding material is encountered in the bottom of the trench, such material shall be removed 6 inches below the required grade and replaced with suitable materials as provided in paragraph BACKFILLING AND COMPACTION.

3.1.1.3 Removal of Unstable Material

Where unstable material is encountered in the bottom of the trench, such material shall be removed to the depth directed and replaced to the proper grade with select granular material as provided in paragraph BACKFILLING AND COMPACTION. When removal of unstable material is required due to the Contractor's fault or neglect in performing the work, the resulting material shall be excavated and replaced by the Contractor without additional cost to the Government.

3.1.1.4 Excavation for Appurtenances

Excavation for manholes, catch-basins, inlets, or similar structures shall be of sufficient size to permit the placement and removal of forms for the full length and width of structure footings and foundations as shown. Rock shall be cleaned of loose debris and cut to a firm surface either level, stepped, or serrated, as shown or as directed. Loose disintegrated rock and thin strata shall be removed. Removal of unstable material shall be as specified above. When concrete or masonry is to be placed in an excavated area, special care shall be taken not to disturb the bottom of the excavation. Excavation to the final grade level shall not be made until just before the concrete or masonry is to be placed.

3.1.1.5 Jacking, Boring, and Tunneling

Unless otherwise indicated, excavation shall be by open cut except that sections of a trench may be jacked, bored, or tunneled if, in the opinion of the Contracting Officer, the pipe, cable, or duct can be safely and properly installed and backfill can be properly compacted in such sections.

3.1.2 Stockpiles

Stockpiles of satisfactory materials shall be placed and graded as specified. Stockpiles shall be kept in a neat and well drained condition, giving due consideration to drainage at all times. The ground surface at stockpile locations shall be cleared, grubbed, and sealed by rubber-tired equipment, excavated satisfactory materials shall be separately stockpiled.

Stockpiles of satisfactory materials shall be protected from contamination which may destroy the quality and fitness of the stockpiled material. If the Contractor fails to protect the stockpiles, and any material becomes unsatisfactory, such material shall be removed and replaced with satisfactory material from approved sources at no additional cost to the Government. Locations of stockpiles of satisfactory materials shall be subject to prior approval of the Contracting Officer. Material within the 250 foot runway lateral clear zone shall not be stockpiled or left more than 1 foot high. Material may not be stockpiled to any hight within the 138 foot construction clear zone of any active taxiway. Material may be placed in stockpiles not exceeding 3 foot above the surrounding grade in other airside work areas outside the runway and taxiway clear zones.

## 3.2 BACKFILLING AND COMPACTION

Backfill material shall consist of satisfactory material, select granular material, or initial backfill material as required. Backfill shall be placed in layers not exceeding 6 inches loose thickness for compaction by hand operated machine compactors, and 8 inches loose thickness for other than hand operated machines, unless otherwise specified. Each layer shall be compacted to at least 95 percent maximum density for cohesionless soils and 90 percent maximum density for cohesive soils, unless otherwise specified.

### 3.2.1 Trench Backfill

Trenches shall be backfilled to the grade shown. When not specifically shown, grade shall be restored to match up with slopes and grades of the adjacent site conditions and topography. The joints and couplings shall be left uncovered during the pressure test.

#### 3.2.1.1 Replacement of Unyielding Material

Unyielding material removed from the bottom of the trench shall be replaced with select granular material or initial backfill material.

#### 3.2.1.2 Replacement of Unstable Material

Unstable material removed from the bottom of the trench or excavation shall be replaced with select granular material placed in layers not exceeding 6 inches loose thickness.

#### 3.2.1.3 Bedding and Initial Backfill

Bedding shall be of the type and thickness specified or shown. Initial backfill material shall be placed and compacted with approved tampers to a height of at least one foot above the utility pipe or conduit. The backfill shall be brought up evenly on both sides of the pipe for the full length of the pipe. Care shall be taken to ensure thorough compaction of the fill under the haunches of the pipe.

#### 3.2.1.4 Final Backfill

The remainder of the trench, except for special materials for roadways, railroads and airfields, shall be filled with satisfactory material. Backfill material shall be placed and compacted as follows:

a. Roadways and Airfields: Backfill shall be placed up to the elevation at which the requirements in Section 02300A EARTHWORK

control. Water flooding or jetting methods of compaction will not be permitted.

b. Sidewalks, Turfed or Seeded Areas and Miscellaneous Areas: Backfill shall be deposited in layers of a maximum of 8 inch loose thickness, and compacted to 85 percent maximum density for cohesive soils and 90 percent maximum density for cohesionless soils. Compaction by water flooding or jetting will not be permitted. This requirement shall also apply to all other areas not specifically designated above.

3.2.2 Backfill for Appurtenances

After the manhole, catchbasin, inlet, or similar structure has been constructed and the concrete has been allowed to cure for 7 days, backfill shall be placed in such a manner that the structure will not be damaged by the shock of falling earth. The backfill material shall be deposited and compacted as specified for final backfill, and shall be brought up evenly on all sides of the structure to prevent eccentric loading and excessive stress.

3.3 SPECIAL REQUIREMENTS

Special requirements for both excavation and backfill relating to the specific utilities are as follows:

3.3.1 Water Lines

Trenches shall be of a depth to provide a minimum cover of 3 feet from the finished grade to the top of the pipe.

3.3.2 Electrical Distribution System

Direct burial cable and conduit or duct line shall have a minimum cover of 24 inches from the finished grade, unless otherwise indicated. Special trenching requirements for direct-burial electrical cables and conduits are specified in Section 16375A ELECTRICAL DISTRIBUTION SYSTEM, UNDERGROUND.

3.3.3 Plastic Marking Tape

Warning tapes shall be installed directly above the pipe, conduit or other utility, at a depth of 18-inches below finished grade unless otherwise shown.

3.4 TESTING

Testing shall be the responsibility of the Contractor and shall be performed at no additional cost to the Government.

3.4.1 Testing Facilities

Tests shall be performed by an approved commercial testing laboratory or may be tested by facilities furnished by the Contractor. No work requiring testing will be permitted until the facilities have been inspected and approved by the Contracting Officer.

3.4.2 Testing of Backfill Materials

Classification of backfill materials shall be determined in accordance with

ASTM D 2487 and the moisture-density relations of soils shall be determined in accordance with ASTM D 1557. A minimum of one soil classification and one moisture-density relation test shall be performed on each different type of material used for bedding and backfill.

3.4.3 Field Density Tests

Tests shall be performed in sufficient numbers to ensure that the specified density is being obtained. A minimum of one field density test for every 500 square feet of backfill placed but not less than one test per lift shall be performed. One moisture density relationship shall be determined for every 1500 cubic yards of material used. Field in-place density shall be determined in accordance with ASTM D 1556 ASTM D 2167 ASTM D 2922. When ASTM D 2922 is used, the calibration curves shall be checked and adjusted using the sand cone method as described in paragraph Calibration of the ASTM publication. ASTM D 2922 results in a wet unit weight of soil and when using this method, ASTM D 3017 shall be used to determine the moisture content of the soil. The calibration curves furnished with the moisture gauges shall be checked along with density calibration checks as described in ASTM D 3017. The calibration checks of both the density and moisture gauges shall be made at the beginning of a job, on each different type of material encountered, at intervals as directed by the Contracting Officer. Copies of calibration curves, results of calibration tests, and field and laboratory density tests shall be furnished to the Contracting Officer. Trenches improperly compacted shall be reopened to the depth directed, then refilled and compacted to the density specified at no additional cost to the Government.

3.4.4 Displacement of Sewers

After other required tests have been performed and the trench backfill compacted to 2 feet above the top of the pipe, the pipe shall be inspected to determine whether significant displacement has occurred. This inspection shall be conducted in the presence of the Contracting Officer. Pipe sizes larger than 36 inches shall be entered and examined, while smaller diameter pipe shall be inspected by shining a light or laser between manholes or manhole locations, or by the use of television cameras passed through the pipe. If, in the judgement of the Contracting Officer, the interior of the pipe shows poor alignment or any other defects that would cause improper functioning of the system, the defects shall be remedied as directed at no additional cost to the Government.

-- End of Section --

SECTION TABLE OF CONTENTS

DIVISION 02 - SITE CONSTRUCTION

SECTION 02458

PRESTRESSED CONCRETE PILING

**NAO ModMaster 10/2003**

PART 1 GENERAL

1.1 REFERENCES
1.2 BASIS FOR BIDS AND PAYMENT
1.2.1 Principal Sum
1.2.2 Basis for Payment
1.3 SUBMITTALS
1.4 QUALIFICATIONS
1.5 SUBSURFACE DATA

PART 2 PRODUCTS

2.1 MATERIALS
2.1.1 Admixtures
2.1.2 Aggregates
2.1.3 Cement
2.1.4 Grout
2.1.5 Prestressing Steel
2.1.6 Reinforcing Steel
2.1.7 Ties and Spirals
2.1.8 Water
2.2 MANUFACTURED UNITS - GENERAL REQUIREMENTS
2.2.1 Pretensioned Piles
2.2.2 Conveying
2.3 FABRICATION OF PRETENSIONED PILES
2.3.1 Workmanship
2.3.2 Forms
2.3.3 Reinforcement and Embedments
2.3.4 Concrete Work
2.3.5 Pretensioning
2.3.6 Detensioning
2.3.7 Curing of Piles
2.4 MANUFACTURING CONTROLS
2.4.1 Initial Sampling and Testing
2.4.1.1 Aggregate
2.4.1.2 Cement
2.4.1.3 Mix Proportions
2.4.2 Sampling and Testing During Fabrication
2.4.2.1 Aggregate
2.4.2.2 Concrete
2.4.3 Changes in Proportions

PART 3 EXECUTION

3.1 PILE DRIVING EQUIPMENT
3.1.1 Pile Hammers

3.1.2 Driving Helmets and Pile Cushions
3.1.3 Hammer Cushion
3.2 INSTALLATION
3.2.1 Handling and Driving
3.2.2 Pile Driving
3.2.3 Jetting of Piles
3.2.4 Cutting of Piles
3.2.5 Protection of Piles
3.2.6 Tolerances in Driving
3.2.7 Build-Ups
3.2.8 Splices
3.2.9 Pilot Piles
3.2.10 Preaugering
3.2.11 Damaged Piles
3.2.12 Obstructions to Driving Piles
3.3 FIELD TESTS AND INSPECTIONS

-- End of Section Table of Contents --

SECTION 02458

PRESTRESSED CONCRETE PILING

**NAO ModMaster 10/2003**

PART 1 GENERAL

1.1 REFERENCES

The publications listed below form a part of this specification to the extent referenced. The publications are referred to in the text by basic designation only.

AMERICAN CONCRETE INSTITUTE (ACI)

| | |
|---|---|
| ACI 214 | (1977; R 1989) Evaluation of Strength Test Results of Concrete |
| ACI 304R | (1989) Guide for Measuring, Mixing, Transporting, and Placing Concrete |
| ACI SP-66 | (1994) ACI Detailing Manual |

AMERICAN SOCIETY FOR TESTING AND MATERIALS (ASTM)

| | |
|---|---|
| ASTM A 82 | (2001) Steel Wire, Plain, for Concrete Reinforcement |
| ASTM A 416 | (1993) Steel Stand, Uncoated Seven-Wire for Prestressed Concrete |
| ASTM A 421 | (1991) Uncoated Stress-Relieved Steel Wire for Prestressed Concrete |
| ASTM A 615 | (1993) Deformed and Plain Billet-Steel Bars for Concrete Reinforcement |
| ASTM C 31 | (1991) Making and Curing Concrete Test Specimens in the Field |
| ASTM C 33 | (1999aE1) Specification for Concrete Aggregates |
| ASTM C 39 | (1993) Compressive Strength of Cylindrical Concrete Specimens |
| ASTM C 70 | (1979; R 1992) Surface Moisture in Fine Aggregate |
| ASTM C 136 | (1996a) Test Method for Sieve Analysis of Fine and Coarse Aggregates |
| ASTM C 143 | (1990a) Slump of Hydraulic Cement Concrete |

| | |
|---|---|
| ASTM C 150 | (1999a) Portland Cement |
| ASTM C 172 | (1999) Sampling Freshly Mixed Concrete |
| ASTM C 260 | (2000) Air-Entraining Admixtures for Concrete |
| ASTM C 494 | (1992) Chemical Admixtures for Concrete |
| ASTM C 566 | (1997) Test Method for Total Moisture Content of Aggregate by Drying |
| ASTM C 666 | (1997) Test Method for Resistance of Concrete to Rapid Freezing and Thawing |

AMERICAN WELDING SOCIETY (AWS)

| | |
|---|---|
| AWS D1.4 | (1998) Structural Welding Code - Reinforcing Steel |

PRECAST/PRESTRESSED CONCRETE INSTITUTE (PCI)

| | |
|---|---|
| PCI Mnl-116 | (1985) Manual for Quality Control for Plants and Production of Precast and Prestressed Concrete Products |
| PCI Mnl-120 | (1992) PCI Design Handbook - Precast and Prestressed Concrete |
| PCI Std-112 | (1984) Standard Prestressed Concrete Piles Square, Octagonal and Cylinder |

## 1.2 BASIS FOR BIDS AND PAYMENT

### 1.2.1 Principal Sum

The contract price for piling shall be a principal sum based on 53, 30-ton, 12 inch square piles, and 36, 5-ton, 12 inch square piles having a total aggregate length of 2684.25 linear feet. Dynamic testing should be utilized on four 30-ton piles and two 5-ton piles at the site. Additionally, dynamic testing should be performed on six 30-ton production pile and four 5-ton production pile.

### 1.2.2 Basis for Payment

Installed Piles

The Contracting Officer shall have the right to increase or decrease the total aggregate length of piles to be furnished and installed by changing the pile locations or elevations, requiring the installation of additional piles, or directing the omission of piles from the requirements shown and specified. Payment for actual lengths of production piles driven in place from the indicated top of pile elevation to the final tip elevation as installed and approved, will be made at the contract unit price as bid. Payment for any excess approved length of pile not driven to the required

tip elevation at the direction of the Contracting Officer, will be made at the contract unit price bid, which payment shall include cutoff of the excess pile length and splaying the exposed strands into the pile cap as required and specified. The approved length of pile is defined as the length of pile from the indicated top of pile elevation, to the required tip elevation as provided in the Contractor's approved production pile schedule. Payment for the specified length of test piles driven in place will be made at the contract unit price, which payment shall include cutoff of the excess pile length and splaying the exposed strands as required for piles which cannot be driven to the tip depth necessary to achieve the indicated top of pile elevation. Piles required to be pulled at no fault of the Contractor will be paid for at the basic contract unit price for furnishing and driving pile in its original position, plus 50 percent of this amount to cover the cost of pulling. Such pulled piles, if redriven, will be paid for at 50 percent of the basic contract unit price for the length driven. Payment for each required and approved pile build-up will be paid for in accordance with the CHANGES clause of the Contract.

Substitute Pile

In the event the Contracting Officer directs the Contractor to install foundation piles of a size different from that specified, the difference in the supplier's market price as of the date of bid opening, between that originally specified and that specified in the change order, shall be multiplied by the total number of linear feet of the substitute pile actually installed and accepted. Payment to the Contractor, in accordance with the preceding paragraph, shall be adjusted upward or downward, as the case may be, by the foregoing amount.

Dynamic Analysis

The contract includes dynamic analysis of 0 test piles. The Contracting Officer reserves the right to increase or decrease the number of test pile analyses. Payment for each test pile analysis will be made at the contract unit price per analysis, which price shall include furnishing, placing, and removing test sensors and equipment, monitoring test pile installation, performing Wave Equation, Refined WEAP, and CAPWAP analyses, and furnishing the Dynamic Test Pile Report. Payment will not be made for additional Phase One testing necessitated by changes to the pile driving equipment or any other aspect of pile driving operations.

Full Compensation

Payment in accordance with the above paragraph "Installed Piles" shall constitute full compensation for furnishing all labor, material, and equipment incidental to providing the piles in their final installed condition as specified and indicated, including mobilization and demobilization. The Contractor will not be allowed separate or additional payment for withdrawn, broken, or rejected piles; or for cut-offs or build-ups, except as required by conditions beyond the Contractor's control or responsibility and when approved by the Contracting Officer in writing.

## 1.3 SUBMITTALS

Government approval is required for submittals with a "G" designation; submittals not having a "G" designation are for information only. When used, a designation following the "G" designation identifies the office that will review the submittal for the Government. The following shall be

submitted in accordance with Section 01330 SUBMITTAL PROCEDURES:

SD-02 Shop Drawings

Fabrication and Installation; G-AE

Drawings including shop and erection details and details of collars, shoes, build-ups and embedded or attached lifting devices, prior to commencing the work or ordering materials. Drawings shall indicate pick-up and support points for piles. Reinforcing steel details shall conform to ACI SP-66.

Pile Driving Plan; G-AE

A complete plan describing the proposed pile installation shall be submitted to the Contracting Officer and approved prior to driving any piles. The plan shall include details of all proposed equipment and accessories, proposed methods of operation, and the proposed sequence of driving permanent production piles.

SD-03 Product Data

Pile Driving Equipment; .

Descriptions of all pile driving equipment to be employed in the work, prior to commencement of pile installations, including details of the pile hammer, power plant, leads, pile cushion material, helmet or cap, and hammer cushion material. Bounce chamber pressure rating curves or charts shall be submitted for double-acting (closed-end) diesel hammers.

Dynamic Testing Equipment; G-AE

The Contractor shall submit information on the dynamic load testing equipment proposed to be used and the proposed methods of operation. This submittal shall as a minimum:

1. Provide details of the proposed pile driving hammer and Wave Equation Drivability Analyses for selection of the hammer along with a statement of driving procedure. The Wave Equation Drivability Analyses are to be completed by the Contractor's Consultant for pile testing for each test pile location where different subsurface conditions exist, and are to also consider the proposed hammer assembly, pile cap block and cushion characteristics, and pile properties and estimated lengths. Analyses are to include copies of computer input and output sheets and graphs showing soil resistance versus blow count as well as maximum tension and compression stresses versus blow count. The source(s) of the input data values shall be clearly indicated. Analyses shall be run at the estimated tip elevation as well as other critical elevations selected by the Contractor's Consultant for pile testing, to define maximum stress levels in the pile from initial through final driving including re-strike.

2. Provide details of the proposed dynamic load testing

equipment. The equipment to be used for dynamic testing of the pile hammer and soil performance and for dynamic load testing of the test piles shall be either a model GCPC or a PAK Pile Driving Analyzer as manufactured by Pile Dynamics, Inc., of Cleveland, Ohio, or approved equivalent.

3. Provide detailed procedure for conducting the dynamic pile load test, and a description of the information which will be generated by the equipment to be used for conducting the load test. The detailed description shall explain how specific information on pile performance will be evaluated to perform refined Wave Equation Analyses and to arrive at recommended installation procedures and estimated pile capacity versus penetration.

SD-06 Test Reports

Fabrication Testing;

Material Test Reports: Copies of material test reports and mix proportioning studies, shall be submitted within 24 hours after completion of tests. The testing requirements for materials incorporated in referenced documents will be waived provided the manufacturer submits certificate(s)in accordance with SD-07 Certificates herein.

Concrete mix proportions and tests: Results shall be submitted and approved prior to delivery of fabricated piles to the project site. Compressive strength results shall include 28-day test results as well as results from tests taken prior to transfer of prestressing force.

Field Tests and Inspections; G-AE .

Dynamic Test Report: The Contractor shall furnish, in accordance with paragraph FIELD TESTS AND INSPECTIONS, a complete printed report on the dynamic load tests, including, but not limited to, a description of the pile driving equipment, driving records for test piles, complete test data, analysis of test data, and recommended allowable design loads versus tip elevation and penetration resistance based on the test results. The .X01 electronic data files shall be provided with the report. The dynamic analysis shall include assessment of hammer performance, pile stresses and integrity, and soil resistance during installation, and shall include both CAPWAP and refined Wave Equation analyses. The report shall be prepared by or under the direct supervision of the Contractor's consultant for pile testing, who shall also inspect installation of test piles and initial production piles. Within 10 days of receipt, or within 7 days of receipt of the Load Test Report, whichever occurs later, the Contracting Officer will determine the minimum tip elevation required for permanent production piles. The Contractor shall use the Contracting Officer's comments and the approved test report to prepare a schedule of production pile lengths, required tip elevations, estimated driving resistance, and locations. The schedule shall be submitted and approved prior to ordering

permanent production piles.

SD-07 Certificates

Fabrication Materials;

The fabrication testing requirements for materials incorporated in referenced documents will be waived provided the manufacturer submits certificate(s) stating that previously manufactured materials have been tested by recognized laboratories, that such materials meet testing requirements specified, and that the materials furnished for this project are of the same type, quality, manufacture, and make as that tested. Copies of the test reports need not be submitted except as specifically required by the Contracting Officer.

SD-09 Manufacturer's Field Reports

Pile Driving; G-AE .

A complete and accurate record of all driven piles shall be continually maintained, and a copy shall be provided to the Contracting Officer upon request or within 5 days of completion of driving. The record shall include the pile number or identification, location, size, length, elevation of tip and top of pile, the number of blows required for each foot of penetration throughout the entire length of the pile, the number of blows per inch for the last 18 inches of penetration, and the total driving time. The record shall also include the type and size of the hammer, the rate of operation, hammer stroke or pressure gauge reading, the type and dimensions of driving helmet or cap, and the cap-block and pile cushion used. Any unusual occurrence during driving of the pile shall be recorded and immediately reported to the Contracting Officer. The Contractor shall notify the Contracting Officer 10 days prior to driving of piles . After installation is accepted, the complete record shall be submitted with the test.

## 1.4 QUALIFICATIONS

The work shall be performed by a firm specializing in the specified foundation system and having experience in constructing and installing the specified foundation system under similar subsurface conditions. The Contractor shall provide a Piling Quality Control Representative (CPQCR) with full authority to direct the pile installation activities, and shall also provide an independent Consultant for pile testing. The CPQCR or the Consultant for pile testing shall provide full-time inspection of all pile handling and installation activities, and shall have at least 2 years' experience in this field. The Contractor's consultant for pile testing shall be a professional Civil Engineer licensed by the Commonwealth of Virginia, experienced in soil mechanics and foundations and having a minimum of two (2) years' experience monitoring pile installation and testing using the specified pile driving analyzer, and shall be fully independent of the Prime Contractor and its subcontractors and suppliers.

## 1.5 SUBSURFACE DATA

Subsurface soil data logs are shown on the drawings . The subsurface investigation reports are available for examination at the Norfolk District, 803 Front Street, Norfolk, Virginia.

# PART 2 PRODUCTS

## 2.1 MATERIALS

### 2.1.1 Admixtures

Admixtures, if used in the concrete mixtures, shall be used at no additional cost to the Government. Chemical admixtures shall conform to ASTM C 494. Air-entraining admixture shall conform to ASTM C 260. Admixtures containing chlorides shall not be used.

### 2.1.2 Aggregates

Aggregates shall conform to ASTM C 33, except as specified otherwise herein. Aggregates shall be free from any substance which may be deleteriously reactive with the alkalies in the cement in an amount sufficient to cause excessive expansion of the concrete. Maximum aggregate size shall be one inch. Fine aggregates from different sources of supply shall not be mixed or stored in the same stock pile, or used alternately in the same concrete mix or the same structure without approval. The fineness MODULUS of fine aggregate shall be not less than 2.40 or greater than 3.0. For piles that will be exposed to freezing and thawing, fine and coarse aggregate subjected to five cycles of the sodium sulfate soundness test shall show a loss not greater than 10 percent. If the selected aggregates fail the soundness test, the Contractor may use the aggregate source, provided concrete specimens made with the aggregates to be used for the piles shall have a durability factor of not less than 80 based on 300 cycles of freezing and thawing when tested in accordance with ASTM C 666.

### 2.1.3 Cement

Cement shall conform to ASTM C 150 except Type IV shall not be used. Cement shall contain less than 5 percent tricalcium aluminate (C3A).

### 2.1.4 Grout

Grout materials used in prestressed piles shall conform to the requirements specified herein for concrete mixes. Admixtures, when required for grout, shall have no injurious effects on steel or concrete. Calcium chloride shall not be used.

### 2.1.5 Prestressing Steel

Prestressing steel shall be seven-wire low relaxation stress-relieved strand conforming to ASTM A 416 or stress-relieved wire conforming to ASTM A 421, Type WA. The minimum ultimate strength shall be 270,000 pounds per square inch (psi). Prestressing steel shall be free from grease, oil, wax, paint, soil, dirt, loose rust, kinks, bends, or other defects.

### 2.1.6 Reinforcing Steel

Non-prestressed reinforcing steel shall conform to ASTM A 615 , Grade 420 . Welding of reinforcing steel shall be in accordance with AWS D1.4.

2.1.7 Ties and Spirals

Steel for ties and spirals shall conform to ASTM A 82.

2.1.8 Water

Water for mixing concrete shall be clean and free from injurious amounts of oils, acids, alkalies, salts, organic materials, or other substances that may be deleterious to concrete or steel. Mortar cubes made with nonpotable mixing water shall have 7-day and 28-day strengths equal to at least 90 percent of the strengths of similar specimens made with potable water.

2.2 MANUFACTURED UNITS - GENERAL REQUIREMENTS

2.2.1 Pretensioned Piles

Pretensioned piles will be solid and shall be cast as monolithic units of homogeneous high-strength concrete from head to tip and stressed with high-tensile cold-drawn stress-relieved steel strands. Design criteria shall be in accordance with PCI Mnl-120 and PCI Std-112. Manufacturing of piles shall conform to PCI Mul-116 except as modified herein.

2.2.2 Conveying

Concrete shall be conveyed from the mixer to the forms as rapidly as practicable by methods that will not cause segregation or loss of ingredients in accordance with ACI 304R. It shall be deposited as nearly as practicable in its final position in the forms. At any point in conveying, the free vertical drop of the concrete shall not exceed 3 feet. Chuting will be permitted only where the concrete is deposited into a hopper before it is placed in the forms. Conveying equipment shall be cleaned thoroughly before each run. Concrete shall be deposited as soon as practicable after the forms and the reinforcement have been inspected. Concrete that has segregated in conveying shall be removed.

2.3 FABRICATION OF PRETENSIONED PILES

Production piles shall not be fabricated and delivered to the site until the Dynamic Test Pile Report and the Contractor's production pile schedule are approved.

2.3.1 Workmanship

Workmanship shall conform to PCI Mnl-116. Pile pick-up points shall be as recommended by PCI and at the responsibility of the Contractor. Unless special lifting devices are attached for pick-up, location of pick-up points cast in the concrete shall be plainly marked on all piles after removal of the forms, and all lifting shall be done at these points. Piles shall be lifted by a suitable bridge or sling attached to the pick-up points. Piling shall not be driven until the concrete attains the specified ultimate compressive strength of 5000 psi as indicated by breaking test cylinders.

2.3.2 Forms

Forms shall be of metal, shall be well braced and stiffened against deformation, and shall be accurately constructed and watertight. Forms shall permit movement of the pile without damage during release of the

prestressing force. Bottom of the form shall be within 1/4-inch of a true plane in a length of 50 feet. Inside forms or void tubes may be of treated fiberboard, plywood, or other material and/or method approved by the Contracting Officer. Void forms shall be anchored firmly so they will not move, float, or collapse during the placing of concrete. If a moving mandrel is used for forming the inner void, special precautions shall be taken to prevent fallout of inner surfaces, tensile cracks, and separation of concrete from strands.

2.3.3 Reinforcement and Embedments

All reinforcing steel, prestressing steel, and embedded items shall be accurately positioned in the forms and secured to prevent movement during concrete placement. All steel shall have a minimum concrete cover of 2 inches, except in marine or other corrosive environments where the minimum concrete cover shall be 2-1/2 inches.

2.3.4 Concrete Work

The concrete mix shall have an ultimate compressive strength of 5000 psi at 28 days and a maximum slump of 4 inches, as determined in accordance with ASTM C 143. Water reducing admixtures, when approved by the Contracting Officer, shall produce concrete with a slump not exceeding 7 inches. Concrete piles exposed to conditions of freezing and thawing shall contain from 4 to 7 percent entrained air provided by the use of an air-entraining admixture conforming to ASTM C 260. Concrete shall not be deposited in the forms until the placement of reinforcement and anchorages has been inspected and approved. Each pile shall be produced of dense concrete with smooth surfaces. Concrete shall be placed promptly after mixing is completed and shall be deposited close to its final position in the form. Vibrator heads shall be smaller than the minimum distance between steel for pretensioning. Dimensional tolerances shall conform to PCI Mnl-116. The ends of all piles and the corners of square piles shall be chamfered. Side forms shall not be removed until concrete has attained 3500 psi compressive strength, as determined by breaking test cylinders.

2.3.5 Pretensioning

Anchorages for tensioning the prestressing steel shall be a type approved by the Contracting Officer. The tension to which the steel is to be pretensioned shall be measured by the elongation of the steel and verified by the jack pressure reading on a gauge. The gauge shall have been re-calibrated by a calibration laboratory approved by the Contracting Officer within 12 months of commencing work and every 6 months thereafter during the term of the contract. Means shall be provided for measuring the elongation of the steel to at least 1/8 inch. When the difference between the results of measurement and gauge reading is more than 5 percent, the cause of the discrepancy shall be corrected. The tensioning steel shall be given a uniform prestress prior to being brought to design prestress. The same initial prestress shall be induced in each unit when several units of prestressing steel in a pile are stretched simultaneously.

2.3.6 Detensioning

Releasing of prestressing force in pretensioned piles shall be performed in a manner that minimizes eccentricity of prestress. Tension in the strands shall be released from the anchorage gradually. In no case shall the stress be released after casting without approval by the Contracting

Officer. The transfer of prestressing force shall be done when the concrete has reached a compressive strength of not less than 70 percent of the specified ultimate compressive strength, as determined by breaking test cylinders.

2.3.7 Curing of Piles

Prior to the start of curing operations, the methods and details of curing shall be submitted for record and shall be approved by the Contracting Officers. All piles shall be cured in accordance with Section 4 of PCI Mnl-116.

2.4 MANUFACTURING CONTROLS

2.4.1 Initial Sampling and Testing

Testing shall be performed by an approved commercial testing laboratory or by an approved laboratory maintained by the manufacturer of the material.

2.4.1.1 Aggregate

Fine and coarse aggregate shall be tested for conformance with ASTM C 33.

2.4.1.2 Cement

Cement shall be tested at the mill or at the mixing plant for conformance with ASTM C 150.

2.4.1.3 Mix Proportions

Prior to commencing pile fabrication, the Contractor shall furnish a statement giving the maximum nominal coarse aggregate size and the proportions of all ingredients that will be used in the manufacture of each strength of concrete proposed for use. Aggregate weights shall be based on the saturated surface dry condition. The statement shall be accompanied by test results from an independent commercial testing laboratory, or by an approved laboratory maintained by the pile fabricator, attesting that the proportions selected will produce concrete of the qualities indicated. No substitutions shall be made in the materials used in the work without additional tests to show that the quality of the concrete is satisfactory. The statement shall also be accompanied by test results demonstrating compliance of aggregate and cement, as specified herein.

2.4.2 Sampling and Testing During Fabrication

Certified Fabrication Testing results shall be submitted in accordance with paragraph SUBMITTALS.

2.4.2.1 Aggregate

Twice during each shift when the concrete plant is operating, the gradation of each size of aggregate shall be tested in accordance with ASTM C 136. At least one test of moisture content of coarse aggregate, in accordance with ASTM C 566, and at least two tests of moisture content of fine aggregate, in accordance with ASTM C 70 or ASTM C 566, shall be made per shift.

2.4.2.2 Concrete

A minimum of two slump tests in accordance with ASTM C 143 shall be made for each 50 cubic yards of concrete produced per shift. Samples of fresh concrete shall be taken in accordance with ASTM C 172. Cylinders shall be molded and cured in accordance with ASTM C 31, and tested in accordance with ASTM C 39. Samples comprised of at least three (3) test cylinders for each class of concrete shall be taken not less than once a day nor less than once for each 50 cubic yards of concrete placed. Each strength test result shall be the average of two cylinders from the same sample tested at 28 days. Additional specimens shall be molded as needed by the Contractor or pile manufacturer. The Contractor or pile manufacturer shall mold, ship, cure, and test the cylinders. The cylinders shall be cured in the same manner as the piles and shall be placed at the point where the poorest curing conditions are offered. Evaluation of the compressive test results tested at 28 days shall be in accordance with ACI 214. The Contractor or pile manufacturer shall certify that the sampling and test methods conform to the requirements of ASTM C 31 and ASTM C 39 and that sufficient samples were taken to evaluate the concrete as follows: The average of three consecutive strength tests shall equal or exceed the specified strength and no individual strength test result shall have less than the specified strength by more than
4250 psi. All test results shall be submitted to the Contracting Officer, for review and approval prior to delivery of piles to the project site.

2.4.3 Changes in Proportions

If the test results of the laboratory cured cylinders at 28 days fall below the specified compressive strength, adjustments in the proportions, the water content, or both shall be made as necessary; if the test results of the field-cured specimens fall below the specified strength, changes in the casting, handling, or storage method and the moisture and curing procedures of such specimens shall be made as necessary to secure the specified strength. All changes shall be submitted in writing to the Contracting Officer. The slump shall be as specified.

PART 3 EXECUTION

The Contractor shall select pile driving equipment based upon subsurface conditions, pile size and capacity, local experience, and Wave Equation Drivability Analyses results per paragraph 1.3 SUBMITTALS. Stresses predicted by wave equation analysis shall not exceed the effective prestress in tension, and 0.85 times the concrete compressive strength minus the effective prestress.

3.1 PILE DRIVING EQUIPMENT

3.1.1 Pile Hammers

The hammer used shall be capable of developing the specified ultimate pile capacity prior to reaching driving refusal, and shall be capable of proving the specified ultimate capacity during Phase Two testing re-strike, considering hammer impact velocity; ram weight; cross section, length, and total weight of the pile; and the character of subsurface material to be encountered. For air or steam hammers, obtain required driving energy of hammer by use of a heavy ram and a short stroke with low impact velocity. Initial hammer selection and operating procedure shall be in accordance with Wave Equation Drivability Analysis results per paragraph 1.3 SUBMITTALS. For piles weighing less than 400 pounds per foot the driving

energy of the hammer shall be not less than 1 foot-pound of energy per pound of pile but not less than 15,000 foot-pounds. Hammer operation shall be modified, or the hammer replaced, during test pile or production pile installation as required, in accordance with refined Wave Equation Analyses and Pile Dynamic Analyzer results or as recommended by the Contractor's Consultant for pile testing. Single-acting hammers shall have an indicator and scale, easily legible from the ground, for hammer stroke measurement. A gauge to monitor air or steam hammer pressure, or diesel hammer bounce chamber pressure, shall be readable by inspectors on the ground.

### 3.1.2 Driving Helmets and Pile Cushions

A driving helmet or cap including a pile cushion shall be used between the top of the pile and the ram to prevent impact damage to the pile. The driving helmet or cap and pile cushion combination shall be capable of protecting the head of the pile, minimize energy absorption and dissipation, and transmit hammer energy uniformly over the top of the pile. The driving helmet or cap shall fit loosely around the top of the pile so that the pile is not restrained by the driving cap if the pile tends to rotate during driving. The pile cushion may be of solid wood or of laminated construction, shall completely cover the top surface of the pile, and shall be retained by the driving helmet. The minimum thickness of the pile cushion shall be 6 inches and the thickness shall be increased as approved by the Contracting Officer's Representative so as to be suitable for the size and length of pile, character of subsurface material to be encountered, hammer characteristics, and the required driving resistance. The pile cushion shall be new at start of driving of each pile, and it shall be replaced if it has been highly compressed, charred, or burned, or has become deteriorated in any manner during driving, but shall not be changed within the last 3 feet of driving.

### 3.1.3 Hammer Cushion

A hammer cushion, when recommended by the hammer manufacturer, shall be used between the helmet or cap and the hammer ram. The cushion shall consist of aluminum and approved industrial type plastic laminate (micarta) discs stacked alternately in a steel housing. Steel plates shall be used at the top and the bottom of the hammer cushion. Where the cushion is other than that specified above, the Contractor shall submit to the Contracting Officer, at least 2 weeks before the start of test pile driving operations, detailed drawings of the cushion he proposes to use accompanied by records of the successful use. The hammer cushion shall be replaced if it has been damaged, highly compressed, charred, or burned or has become spongy or deteriorated in any manner. If a wood cushion is used, it shall not be replaced during the final 3 feet of driving of any pile. Under no circumstances will the use of small wood blocks, wood chips, rope, or other material permitting excessive loss of hammer energy be permitted.

## 3.2 INSTALLATION

All pile handling and installation shall be performed under the direct supervision of the CPQCR for pile installation, as specified in paragraph QUALIFICATIONS.

### 3.2.1 Handling and Driving

Piles or pile sections shall not be handled or moved in any manner that would result in cracking or permanent damage to the concrete or to the

grout surrounding the prestressing cables. Piles shall not be driven until the concrete has attained the specified ultimate compressive strength of 5000 psi. Piles may be driven without pile guides or leads providing a hammer guide frame is used to keep the pile and hammer in alignment.

3.2.2 Pile Driving

The Contracting Officer shall be notified at least 10 days prior to beginning installation of test piles, and at least 7 days prior to beginning production pile installation. Pile driving records shall be prepared in accordance with paragraph SUBMITTALS. Excavation shall be stopped at 1 foot above foundation grade before piles are driven. When pile driving is completed, excavation shall be completed to lines and grade shown. All pile driving shall be fully monitored and recorded by the Contractor's consultant for pile testing or by the CPQCR. During initial driving and while the pile tip is penetrating layers of very soft soil, pile cushion thickness shall be increased and steam and air hammers shall use a reduced driving energy of the hammer as necessary to keep tensile stresses below allowable limits. Diesel-powered hammers shall be operated at the rate recommended by the manufacturer throughout the entire driving period. Sufficient pressure shall be maintained at the steam or air hammer so that:

a. For a double-acting hammer, the number of blows per minute during and at the completion of driving of the pile is equal approximately to that at which the hammer is rated.

b. For a single-acting hammer, there is a full upward stroke of the ram, unless a shortened stroke is directed by the Contractor's Consultant for Pile Testing..

c. For a differential type hammer, there is a slight rise of the hammer base during each upward stroke.

3.2.3 Jetting of Piles

Jetting of piles will not be permitted.

3.2.4 Cutting of Piles

When necessary and approved by the Contracting Officer in writing, cutting of piles shall be with pneumatic tools, sawing, or other approved methods which will not damage the pile below the surface of the cut. The use of explosives for cutting will not be permitted. When cutting of excess approved pile length will result in insufficient embedment length of required dowels, a minimum of 3 feet of each strand shall be fully exposed and splayed uniformly into the pile cap as approved. Payment for cutting of piles will be made in accordance with paragraph BASIS FOR PAYMENT.

3.2.5 Protection of Piles

Care shall be taken to avoid damage to the piles in handling piles, in placing the pile in the leads, and during the pile driving operations. Where pile or projecting reinforcement orientation is essential, special care shall be taken to maintain the orientation during driving. The top of the pile shall be squared to the longitudinal axis of the pile. If the Contractor elects to use a pile head with projecting strands or mild steel

reinforcing, a special driving head shall be used to prevent damage to the reinforcement and prevent direct impact forces from being transmitted through the reinforcement.

3.2.6 Tolerances in Driving

All piles shall be driven with a variation of not more than 0.25 inch per foot of pile length from the vertical for plumb piles. Top of pile shall be within 2 inches laterally and within 1/2 inch vertically of the location indicated. When piles are driven such that the top of pile is lower than indicated, the structural foundation mat shall be increased in depth such that the pile is embedded for the minimum dimension shown. Manipulation of piles to force them into position will not be permitted. All piles shall be checked for heave. Piles found to have heaved shall be redriven to the required point elevation.

3.2.7 Build-Ups

If any pile does not attain sufficient resistance or penetration when the pile head is at the established cut-off elevation, driving shall continue as directed by the Contracting Officer until the required resistance or penetration is reached. The pile shall be built-up to the specified cut-off elevation by a cast-in-place extension of the pile, in accordance with procedures for build-up without driving as detailed in PCI Std-112. Details of means for protecting the joints by a suitable mortar or epoxy shall be approved by the Contracting Officer. Build-ups shall not be driven. Where build-ups are exposed to water, the Contractor shall protect the cast-in-place section from the water during the curing period, in a manner approved by the Contracting Officer. Concrete in build-up shall have a minimum ultimate compressive strength of 4000 psi. Build-ups will not be permitted on more than 10 percent of the total number of piles. If this percent figure is exceeded or if in the judgment of the Contracting Officer the clustered location of the build-ups is undesirable, piles of insufficient length shall be withdrawn and replaced with longer piles. Payment for such build-ups, withdrawal and replacement will be made in accordance with paragraph BASIS FOR BIDS AND PAYMENT, except when such work is required due to the fault of the Contractor. If pile tops are damaged during driving, the damaged portion shall be removed and the pile built-up, or the pile shall be removed and replaced, as directed by the Contracting Officer and at no additional cost to the Government.

3.2.8 Splices

Splicing of piles will not be permitted.

3.2.9 Pilot Piles

Pilot piles shall not be permitted to break or cut through obstructions. .

3.2.10 Preaugering

Preaugering is not permitted

3.2.11 Damaged Piles

a. When the tip of a driven pile is passing through soft soil so that there is little or no resistance to penetration of the pile, longitudinal tensile stresses may be generated in the pile shaft. These tensile stresses may be sufficient to damage the pile during driving. For such

driving conditions, the contractor shall modify his driving procedures to limit the tensile stresses in the piles to acceptable levels. Piles which fail due to longitudinal tensile stresses caused by inappropriate driving shall be replaced by the Contractor at no additional expense to the Government.

b. Should any pile be damaged during driving, or be driven outside its specified tolerance for position, or otherwise be rejected due to non-conformance with the requirements of the contract, it shall be abandoned and additional pile or piles shall be installed at no additional cost, in the locations designated by Contracting Officer to replace the abandoned pile. Such changes in pile caps, strap beams, and reinforcement made necessary by such pile relocations shall be made without additional cost. Abandoned piles shall be cut off below the bottoms of the pile caps, or lower as directed by the Contracting Officer.

c. If any pile driven to the specified resistance in the specified strata is found to be out of plumb, or if its center at the level of the cut off is out of position or any pile is loaded more than 10 percent greater than its design load, or so as to change the shape of the pile group making it necessary to investigate and redesign the pile caps or other foundation concrete, the contractor shall provide additional piles as directed, or make such changes in pile caps, strap beams, or foundation walls, as directed, so that no pile in the completed group will be loaded more than 10 percent greater than its designed load, computed from an assumed fully loaded condition in its designed position. The cost of additional piles and changes to concrete pile caps, mats, strap beams, etc., made for this purpose shall be borne by the contractor.

d. Work of whatever nature, including cost of investigating and redesign, required on account of rejected, damaged, or displaced piles, excepting piles which have been abandoned at the Government's expense due to obstructions as stipulated herein, shall be provided by the contractor as directed and without additional cost.

e. For efficient prosecution of the work, the licensed land surveyor engaged by the contractor shall convey partial pile survey information to the Contracting Officer at intervals, so that any necessary investigation and redesign may proceed at a reasonable time. At the conclusion of the work, however, all pile survey information shall be furnished on a drawing as described under SUBMITTALS. The Government reserves the right to take up to 5 working days to review and approve final pile locations.

3.2.12 Obstructions to Driving Piles

a. If obstructions are encountered below the bottom of the pile cap, the contractor shall remove partially driven pile or use a mandrel or a steel spud to clear a way for the pile or piles. If so ordered by the Contracting Officer in writing, obstructions encountered that cannot be cleared shall be removed by the contractor; payment therefor will be made in accordance with the Contract clauses. Because of the obstructions, under this paragraph, the Contracting Officer may abandon piles and order additional piles and the footage of such piles abandoned and additional piles shall be paid for in accordance with the CHANGES clause of the CONTRACT CLAUSES. . The additional cost of pile cap, struts, or girders required because of obstructions under this paragraph will be borne by the Government. When not caused by obstructions, these costs shall be borne by the Contractor. The investigation and redesign costs shall be paid as stipulated under DAMAGED PILES.

b. If, subsequent to the driving of a completed pile, the pile is damaged by an obstruction during the driving of another pile, the Government will pay the cost of the work ordered by the Contracting Officer to correct the condition, .

c. If the pile gets out of alignment by loss of contact with the driving apparatus, or if it is abandoned during the operation and thereafter constitutes an obstruction in the ground and causes damage to a pile in the same or adjacent location, the contractor shall assume all costs attributable to the displaced part or parts.

3.3 FIELD TESTS AND INSPECTIONS

The Contractor shall notify the Contracting Officer 10 days prior to driving of piles , in order to witness the driving, testing, and recording procedures of the piles.

-- End of Section --

SECTION TABLE OF CONTENTS

DIVISION 02 - SITE CONSTRUCTION

SECTION 02510A

WATER DISTRIBUTION SYSTEM

**05/02**

PART 1 GENERAL

1.1 REFERENCES
1.2 PIPING
1.2.1 Service Lines
1.2.2 Potable Water Lines
1.2.3 Plastic Piping System
1.2.4 Excavation, Trenching, and Backfilling
1.3 SUBMITTALS
1.4 HANDLING
1.4.1 Miscellaneous Plastic Pipe and Fittings

PART 2 PRODUCTS

2.1 PIPE
2.1.1 Plastic Pipe
2.1.1.1 PVC Plastic Pipe
2.2 JOINTS
2.2.1 PVC Pipe
2.3 VALVES
2.3.1 Gate Valves
2.4 MISCELLANEOUS ITEMS
2.4.1 Service Clamps
2.4.2 Corporation Stops
2.4.3 Service Stops
2.4.4 Tapping Sleeves
2.4.5 Service Boxes
2.4.6 Disinfection

PART 3 EXECUTION

3.1 INSTALLATION
3.1.1 Cutting of Pipe
3.1.2 Adjacent Facilities
3.1.2.1 Sewer Lines
3.1.2.2 Water Lines
3.1.3 Joint Deflection
3.1.3.1 Offset for Flexible Plastic Pipe
3.1.4 Placing and Laying
3.1.4.1 Plastic Pipe Installation
3.1.4.2 Piping Connections
3.1.4.3 Penetrations
3.1.5 Jointing
3.1.5.1 PVC Plastic Pipe Requirements
3.1.5.2 Transition Fittings
3.1.6 Installation of Service Lines

3.1.6.1 Service Lines 2 Inches and Smaller
3.1.6.2 Service Lines Larger than 50 mm (2 Inches)
3.1.7 Setting of Fire Hydrants, Meters, Valves and Valve Boxes
3.1.7.1 Location of Valves
3.1.7.2 Location of Service Boxes
3.1.8 Thrust Restraint
3.2 HYDROSTATIC TESTS
3.2.1 Pressure Test
3.2.2 Leakage Test
3.2.3 Time for Making Test
3.2.4 Concurrent Hydrostatic Tests
3.3 BACTERIOLOGICAL DISINFECTION
3.3.1 Bacteriological Disinfection
3.4 CLEANUP

-- End of Section Table of Contents --

SECTION 02510A

WATER DISTRIBUTION SYSTEM
**05/02**

PART 1 GENERAL

1.1 REFERENCES

The publications listed below form a part of this specification to the extent referenced. The publications are referred to in the text by basic designation only.

AMERICAN SOCIETY FOR TESTING AND MATERIALS (ASTM)

| | |
|---|---|
| ASTM D 1784 | (1999a) Rigid Poly(Vinyl Chloride) (PVC) Compounds and Chlorinated Poly(Vinyl Chloride) (CPVC) Compounds |
| ASTM D 2241 | (2000) Specification for Poly(Vinyl Chloride) (PVC) Pressure-Rated Pipe (SDR Series) |
| ASTM D 2464 | (1999) Threaded Poly(Vinyl Chloride) (PVC) Plastic Pipe Fittings, Schedule 80 |
| ASTM D 2564 | (1996a) Solvent Cements for Poly(Vinyl Chloride) (PVC) Plastic Piping Systems |
| ASTM D 2855 | (1996) Making Solvent-Cemented Joints with Poly(Vinyl Chloride) (PVC) Pipe and Fittings |
| ASTM F 477 | (1999) Elastomeric Seals (Gaskets) for Joining Plastic Pipe |

ASME INTERNATIONAL (ASME)

| | |
|---|---|
| ASME B1.20.1 | (1983; R 1992) Pipe Threads, General Purpose (Inch) |

AMERICAN WATER WORKS ASSOCIATION (AWWA)

| | |
|---|---|
| AWWA B300 | (1992) Hypochlorites |
| AWWA B301 | (1992) Liquid Chlorine |
| AWWA C651 | (1992) Disinfecting Water Mains |

| | |
|---|---|
| AWWA C800 | (1989) Underground Service Line Valves and Fittings |
| AWWA M23 | (1980) Manual: PVC Pipe - Design and Installation |

ASBESTOS CEMENT PIPE PRODUCERS ASSOCIATION (ACPPA)

| | |
|---|---|
| ACPPA 1344 | (1988) Recommended Work Practices for A/C Pipe |

MANUFACTURERS STANDARDIZATION SOCIETY OF THE VALVE AND FITTINGS INDUSTRY (MSS)

| | |
|---|---|
| MSS SP-80 | (1997) Bronze Gate, Globe, Angle and Check Valves |

NSF INTERNATIONAL (NSF)

| | |
|---|---|
| NSF 14 | (1998) Plastics Piping Components and Related Materials |
| NSF 61 | (1999) Drinking Water System Components - Health Effects (Sections 1-9) |

## 1.2 PIPING

This section covers water service lines, and connections to building service at a point approximately 5 feet outside buildings and structures to which service is required. The Contractor shall have a copy of the manufacturer's recommendations for each material or procedure to be utilized available at the construction site at all times.

### 1.2.1 Service Lines

Piping for water service lines less than 3 inches in diameter shall be polyvinyl chloride (PVC) plastic unless otherwise shown or specified.

### 1.2.2 Potable Water Lines

Piping and components of potable water systems which come in contact with the potable water shall conform to NSF 61.

### 1.2.3 Plastic Piping System

Plastic piping system components (PVC) intended for transportation of potable water shall comply with NSF 14 and be legibly marked with appropriate symbols.

### 1.2.4 Excavation, Trenching, and Backfilling

Excavation, trenching, and backfilling shall be in accordance with the applicable provisions of Section 02316A EXCAVATION, TRENCHING, AND BACKFILLING FOR UTILITIES SYSTEMS, except as modified herein.

## 1.3 SUBMITTALS

Government approval is required for submittals with a "G" designation; submittals not having a "G" designation are for information only. When used, a designation following the "G" designation identifies the office that will review the submittal for the Government. The following shall be submitted in accordance with Section 01330 SUBMITTAL PROCEDURES:

SD-03 Product Data

Installation; G-AE.

The manufacturer's recommendations for each material or procedure to be utilized.

Waste Water Disposal Method; G-AE.

The method proposed for disposal of waste water from hydrostatic tests and disinfection, prior to performing hydrostatic tests.

Satisfactory Installation; G-AE.

A statement signed by the principal officer of the contracting firm stating that the installation is satisfactory and in accordance with the contract drawings and specifications, and the manufacturer's prescribed procedures and techniques, upon completion of the project and before final acceptance.

SD-06 Test Reports

Bacteriological Disinfection; G-AE.

Test results from commercial laboratory verifying disinfection.

## 1.4 HANDLING

Pipe and accessories shall be handled to ensure delivery to the trench in sound, undamaged condition, including no injury to the pipe coating or lining. If the coating or lining of any pipe or fitting is damaged, the repair shall be made by the Contractor in a satisfactory manner, at no additional cost to the Government. No other pipe or material shall be placed inside a pipe or fitting after the coating has been applied. Pipe shall be carried into position and not dragged. Use of pinch bars and tongs for aligning or turning pipe will be permitted only on the bare ends of the pipe. The interior of pipe and accessories shall be thoroughly cleaned of foreign matter before being lowered into the trench and shall be kept clean during laying operations by plugging or other approved method. Before installation, the pipe shall be inspected for defects. Material found to be defective before or after laying shall be replaced with sound material without additional expense to the Government. Rubber gaskets that are not to be installed immediately shall be stored in a cool and dark place.

### 1.4.1 Miscellaneous Plastic Pipe and Fittings

Polyvinyl Chloride (PVC)fittings shall be handled and stored in accordance with the manufacturer's recommendations. Storage facilities shall be classified and marked in accordance with NFPA 704, with classification as indicated in NFPA 49 and NFPA 325-1.

## PART 2 PRODUCTS

### 2.1 PIPE

Pipe shall conform to the respective specifications and other requirements specified below.

#### 2.1.1 Plastic Pipe

##### 2.1.1.1 PVC Plastic Pipe

Pipe, couplings and fittings shall be manufactured of PVC material conforming to ASTM D 1784, Class 12454B.

a. Pipe Less Than 4 inch Diameter:

(1) Class 200, DR 13.5 PVC pipe conforming to ASTM D 2241 with solvent cement joints. Fittings shall conform to ASTM D 2467, Schedule 80.

(2) Screw-Joint: Threaded joints may be used at connections to valves and main taps. Theaded fittings shall be Schedule 80 conforming to ASTM D 2464 and ASME B1.20.1. Threaded pipe couplings when used, shall be tested as required by ASTM D 2464.

### 2.2 JOINTS

#### 2.2.1 PVC Pipe

Joints, fittings, and couplings shall be as specified for PVC pipe. Joints connecting pipe of differing materials shall be made in accordance with the manufacturer's recommendations, and as approved by the Contracting Officer.

### 2.3 VALVES2.3.1 Gate Valves

Gate valves shall be designed for a working pressure of not less than 150 psi. Valve connections shall be as required for the piping in which they are installed. Valves shall have a clear waterway equal to the full nominal diameter of the valve, and shall be opened by turning counterclockwise. The operating nut or wheel shall have an arrow, cast in the metal, indicating the direction of opening.

a. Valves smaller than 3 inches shall be all bronze and shall conform to MSS SP-80, Type 1, Class 150.

### 2.4 MISCELLANEOUS ITEMS

#### 2.4.1 Service Clamps

Service clamps shall have a pressure rating not less than that of the pipe to be connected and shall be either the single or double flattened strap type. Clamps shall have a galvanized malleable-iron body with cadmium plated straps and nuts. Clamps shall have a rubber gasket cemented to the body.

2.4.2 Corporation Stops

Corporation stops shall have standard corporation stop thread conforming to AWWA C800 on the inlet end, compression pattern flared tube couplings, or wiped joints for connections to goosenecks.

2.4.3 Service Stops

Service stops shall be water-works inverted-ground-key type, oval or round flow way, tee handle, without drain. Pipe connections shall be suitable for the type of service pipe used. All parts shall be of bronze with female compression- couplings, and shall be designed for a hydrostatic test pressure not less than 150 psi.

2.4.4 Tapping Sleeves

Tapping sleeves of the sizes indicated for connection to existing main shall be the cast gray, ductile, or malleable iron, split-sleeve type with flanged or grooved outlet, and with bolts, follower rings and gaskets on each end of the sleeve. Construction shall be suitable for a minimum working pressure of 150 psi. Bolts shall have square heads and hexagonal nuts. Longitudinal gaskets and mechanical joints with gaskets shall be as recommended by the manufacturer of the sleeve. When using grooved mechanical tee, it shall consist of an upper housing with full locating collar for rigid positioning which engages a machine-cut hole in pipe, encasing an elastomeric gasket which conforms to the pipe outside diameter around the hole and a lower housing with positioning lugs, secured together during assembly by nuts and bolts as specified, pretorqued to 50 foot-pound.

2.4.5 Service Boxes

Service boxes shall be cast iron or concrete and shall be extension service boxes of the length required for the depth of the line, with either screw or slide-type adjustment. The boxes shall have housings of sufficient size to completely cover the service stop or valve and shall be complete with identifying covers.

2.4.6 Disinfection

Chlorinating materials shall conform to the following:

Chlorine, Liquid: AWWA B301.

Hypochlorite, Calcium and Sodium: AWWA B300.

PART 3 EXECUTION

3.1 INSTALLATION

3.1.1 Cutting of Pipe

Cutting of pipe shall be done in a neat and workmanlike manner without damage to the pipe. Unless otherwise recommended by the manufacturer and authorized by the Contracting Officer, cutting shall be done with an approved type mechanical cutter.

3.1.2 Adjacent Facilities

3.1.2.1 Sewer Lines

Where the location of the water pipe is not clearly defined in dimensions on the drawings, the water pipe shall not be laid closer horizontally than 10 feet from a sewer except where the bottom of the water pipe will be at least 12 inches above the top of the sewer pipe, in which case the water pipe shall not be laid closer horizontally than 6 feet from the sewer. Where water lines cross under gravity-flow sewer lines, the sewer pipe, for a distance of at least 10 feet each side of the crossing, shall be fully encased in concrete or shall be made of pressure pipe with no joint located within 3 feet horizontally of the crossing. Water lines shall in all cases cross above sewage force mains or inverted siphons and shall be not less than 2 feet above the sewer main. Joints in the sewer main, closer horizontally than 3 feet to the crossing, shall be encased in concrete.

3.1.2.2 Water Lines

Water lines shall not be laid in the same trench with sewer lines, gas lines, fuel lines, or electric wiring.

3.1.3 Joint Deflection

3.1.3.1 Offset for Flexible Plastic Pipe

Maximum offset in alignment between adjacent pipe joints shall be as recommended by the manufacturer and approved by the Contracting Officer, but shall not exceed 5 degrees.

3.1.4 Placing and Laying

Pipe and accessories shall be carefully lowered into the trench by means of derrick, ropes, belt slings, or other authorized equipment. Water-line materials shall not be dropped or dumped into the trench. Abrasion of the pipe coating shall be avoided. Except where necessary in making connections with other lines or as authorized by the Contracting Officer, pipe shall be laid with the bells facing in the direction of laying. The full length of each section of pipe shall rest solidly upon the pipe bed, with recesses excavated to accommodate bells, couplings, and joints. Pipe that has the grade or joint disturbed after laying shall be taken up and relaid. Pipe shall not be laid in water or when trench conditions are unsuitable for the work. Water shall be kept out of the trench until joints are complete. When work is not in progress, open ends of pipe, fittings, and valves shall be securely closed so that no trench water, earth, or other substance will enter the pipes or fittings. Where any part of the coating or lining is damaged, the repair shall be made by and at the Contractor's expense in a satisfactory manner. Pipe ends left for future connections shall be valved, plugged, or capped, and anchored, as shown.

3.1.4.1 Plastic Pipe Installation

PVC pipe shall be installed in accordance with AWWA M23.

3.1.4.2 Piping Connections

Where connections are made between new work and existing mains, the connections shall be made by using specials and fittings to suit the actual conditions. When made under pressure, these connections shall be installed

using standard methods as approved by the Contracting Officer. Connections to existing asbestos-cement pipe shall be made in accordance with ACPPA 1344.

3.1.4.3 Penetrations

Pipe passing through slabs or walls of valve pits and structures shall be provided with ductile-iron or Schedule 40 steel sleeves. Annular space between pipe and sleeves shall be filled with silicon or other approved sealant.

3.1.5 Jointing

3.1.5.1 PVC Plastic Pipe Requirements

a. Pipe less than 4 inch diameter: Threaded joints shall be made by wrapping the male threads with approved thread tape then threading the joining members together. The joint shall be tightened using strap wrenches to prevent damage to the pipe and/or fitting. Preformed rubber-ring gaskets for elastomeric-gasket joints shall be made in accordance with ASTM F 477 and as specified. Pipe ends for push-on joints shall be beveled to facilitate assembly and marked to indicate when the pipe is fully seated. The gasket shall be prelubricated to prevent displacement. The gasket and ring groove in the bell or coupling shall match. The manufacturer of the pipe or fitting shall supply the elastomeric gasket. Couplings shall be provided with stops or centering rings to assure that the coupling is centered on the joint. Solvent cement joints shall use sockets conforming to ASTM D 2467. The solvent cement used shall meet the requirements of ASTM D 2564; the joint assembly shall be made in accordance with ASTM D 2855 and the manufacturer's specific recommendations.

3.1.5.2 Transition Fittings

Connections between different types of pipe and accessories shall be made with transition fittings approved by the Contracting Officer.

3.1.6 Installation of Service Lines

Service lines shall include the pipeline connecting building piping to water distribution lines to the connections with the building service at a point approximately 5 feet outside the building where such building service exists. Where building services are not installed, the Contractor shall terminate the service lines approximately 5 feet from the site of the proposed building at a point designated by the Contracting Officer. Such service lines shall be closed with plugs or caps. All service stops and valves shall be provided with service boxes. Service lines shall be constructed in accordance with the following requirements:

3.1.6.1 Service Lines 2 Inches and Smaller

Service lines 2 inches and smaller shall be connected to the main by a directly-tapped corporation stop or by a service clamp. A corporation stop and a copper gooseneck shall be provided with either type of connection. Maximum sizes for directly-tapped corporation stops and for outlets with service clamps shall be as in TABLE I. Where 2 or more gooseneck connections to the main are required for an individual service, such connections shall be made with standard branch connections. The total clear area of the branches shall be at least equal to the clear area of the

service which they are to supply.

TABLE I. SIZE OF CORPORATION STOPS AND OUTLET

| Pipe Size Inches | Corporation Stops, Inches For Ductile-Iron Pipe | Outlets w/Service Clamps, Inches Single & Double Strap |
|---|---|---|
| 3 | -- | 1 |
| 4 | 1 | 1 |
| 6 | 1-1/4 | 1-1/2 |
| 8 | 1-1/2 | 2 |
| 10 | 1-1/2 | 2 |
| 12 & larger | 2 | 2 |

NOTE:

a. Service lines 1-1/2 inches and smaller shall have a service stop.

b. Service lines 2 inches and larger in size shall have a gate valve.

3.1.6.2 Service Lines Larger than 50 mm (2 Inches)

Service lines larger than 2 inches shall be connected to the main by a tapped saddle, tapping sleeve and valve, service clamp or reducing tee, depending on the main diameter and the service line diameter, and shall have a gate valve. Lines 3 inches and larger shall use rubber-seated gate valves.

3.1.7 Setting of Fire Hydrants, Meters, Valves and Valve Boxes

3.1.7.1 Location of Valves

After delivery, valves shall be drained to prevent freezing and shall have the interiors cleaned of all foreign matter before installation. Stuffing boxes shall be tightened Valves and valve boxes shall be installed where shown or specified, and shall be set plumb. Valve boxes shall be centered on the valves. Boxes shall be installed over each outside gate valve unless otherwise shown. Where feasible, valves shall be located outside the area of roads and streets. Earth fill shall be tamped around each valve box or pit to a distance of 4 feet on all sides of the box, or the undisturbed trench face if less than 4 feet.

3.1.7.2 Location of Service Boxes

Where water lines are located below paved streets having curbs, the boxes shall be installed directly back of the curbs. Where no curbing exists, service boxes shall be installed in accessible locations, beyond the limits of street surfacing, walks and driveways.

3.1.8 Thrust Restraint

Valves shall be securely anchored or shall be provided with thrust

restraints to prevent movement.

## 3.2 HYDROSTATIC TESTS

### 3.2.1 Pressure Test

After the pipe is laid, the joints completed, and the trench partially backfilled leaving the joints exposed for examination, the newly laid piping or any valved section of piping shall, unless otherwise specified, be subjected for 1 hour to a hydrostatic pressure test of 150 psi. Water supply lines designated on the drawings shall be subjected for 1 hour to a hydrostatic pressure test of 150 psi. Each valve shall be opened and closed several times during the test. Exposed pipe, joints, fittings, hydrants, and valves shall be carefully examined during the partially open trench test. Joints showing visible leakage shall be replaced or remade as necessary. Cracked or defective pipe, joints, fittings, hydrants and valves discovered in consequence of this pressure test shall be removed and replaced with sound material, and the test shall be repeated until the test results are satisfactory. The requirement for the joints to remain exposed for the hydrostatic tests may be waived by the Contracting Officer when one or more of the following conditions is encountered:

a. Wet or unstable soil conditions in the trench.

b. Compliance would require maintaining barricades and walkways around and across an open trench in a heavily used area that would require continuous surveillance to assure safe conditions.

c. Maintaining the trench in an open condition would delay completion of the project.

The Contractor may request a waiver, setting forth in writing the reasons for the request and stating the alternative procedure proposed to comply with the required hydrostatic tests. Backfill placed prior to the tests shall be placed in accordance with the requirements of Section 02316A EXCAVATION, TRENCHING, AND BACKFILLING FOR UTILITIES SYSTEMS.

### 3.2.2 Leakage Test

Leakage test shall be conducted after the pressure tests have been satisfactorily completed. The duration of each leakage test shall be at least 2 hours, and during the test the water line shall be subjected to not less than 150 psi pressure. Leakage is defined as the quantity of water to be supplied into the newly laid pipe, or any valved or approved section, necessary to maintain pressure within 5 psi of the specified leakage test pressure after the pipe has been filled with water and the air expelled. Piping installation will not be accepted if leakage exceeds the allowable leakage which is determined by the following formula:

L = 0.0001351ND(P raised to 0.5 power)

L = Allowable leakage in gallons per hour
N = Number of joints in the length of pipeline tested
D = Nominal diameter of the pipe in inches
P = Average test pressure during the leakage test, in psi gauge

Should any test of pipe disclose leakage greater than that calculated by the above formula, the defective joints shall be located and repaired until the leakage is within the specified allowance, without additional cost to

the Government.

3.2.3 Time for Making Test

Except for joint material setting pipelines jointed with rubber gaskets, mechanical or push-on joints, or couplings may be subjected to hydrostatic pressure, inspected, and tested for leakage at any time after partial completion of backfill.

3.2.4 Concurrent Hydrostatic Tests

The Contractor may elect to conduct the hydrostatic tests using either or both of the following procedures. Regardless of the sequence of tests employed, the results of pressure tests, leakage tests, and disinfection shall be as specified. Replacement, repair or retesting required shall be accomplished by the Contractor at no additional cost to the Government.

a. Pressure test and leakage test may be conducted concurrently.

b. Hydrostatic tests and disinfection may be conducted concurrently, using the water treated for disinfection to accomplish the hydrostatic tests. If water is lost when treated for disinfection and air is admitted to the unit being tested, or if any repair procedure results in contamination of the unit, disinfection shall be reaccomplished.

3.3 BACTERIOLOGICAL DISINFECTION

3.3.1 Bacteriological Disinfection

Before acceptance of potable water operation, each unit of completed waterline shall be disinfected as prescribed by AWWA C651. After pressure tests have been made, the unit to be disinfected shall be thoroughly flushed with water until all entrained dirt and mud have been removed before introducing the chlorinating material. The chlorinating material shall be either liquid chlorine, calcium hypochlorite, or sodium hypochlorite, conforming to paragraph MISCELLANEOUS ITEMS. The chlorinating material shall provide a dosage of not less than 50 ppm and shall be introduced into the water lines in an approved manner. Polyvinyl Chloride (PVC) pipe lines shall be chlorinated using only the above specified chlorinating material in solution. The agent shall not be introduced into the line in a dry solid state. The treated water shall be retained in the pipe long enough to destroy all non-spore forming bacteria. Except where a shorter period is approved, the retention time shall be at least 24 hours and shall produce not less than 25 ppm of free chlorine residual throughout the line at the end of the retention period. Valves on the lines being disinfected shall be opened and closed several times during the contact period. The line shall then be flushed with clean water until the residual chlorine is reduced to less than 1.0 ppm. During the flushing period, each fire hydrant on the line shall be opened and closed several times. From several points in the unit, personnel from the Contractor's commercial laboratory shall take at least 3 water samples from different points, approved by the Contracting Officer, in proper sterilized containers and perform a bacterial examination in accordance with state approved methods. The commercial laboratory shall be certified by the state's approving authority for examination of potable water. The disinfection shall be repeated until tests indicate the absence of pollution for at least 2 full days. The unit will not be accepted until satisfactory bacteriological results have been obtained.

## 3.4 CLEANUP

Upon completion of the installation of water lines, and appurtenances, all debris and surplus materials resulting from the work shall be removed.

-- End of Section --

SECTION TABLE OF CONTENTS

DIVISION 02 - SITE CONSTRUCTION

SECTION 02531

SANITARY SEWERS

**07/02**

PART 1 GENERAL

1.1 REFERENCES
1.2 SYSTEM DESCRIPTION
1.2.1 Sanitary Sewer Gravity Pipeline
1.3 GENERAL REQUIREMENTS
1.4 SUBMITTALS
1.5 DELIVERY, STORAGE, AND HANDLING
1.5.1 Delivery and Storage
1.5.1.1 Piping
1.5.2 Handling

PART 2 PRODUCTS

2.1 PIPELINE MATERIALS
2.1.1 PVC Plastic Gravity Sewer Piping
2.1.1.1 PVC Plastic Gravity Pipe and Fittings
2.2 MISCELLANEOUS MATERIALS
2.2.1 GASKETS AND CONNECTORS

PART 3 EXECUTION

3.1 INSTALLATION OF PIPELINES AND APPURTENANT CONSTRUCTION
3.1.1 General Requirements for Installation of Pipelines
3.1.1.1 Location
3.1.1.2 Earthwork
3.1.1.3 Pipe Laying and Jointing
3.1.1.4 Connections to Existing Lines
3.1.2 Special Requirements
3.1.2.1 Installation of PVC Plastic Piping
3.1.3 Miscellaneous Construction and Installation
3.1.3.1 Connecting to Existing Manholes
3.2 FIELD QUALITY CONTROL
3.2.1 Field Tests and Inspections
3.2.2 Tests for Sanitary Piping
3.2.2.1 Leakage Tests
3.2.2.2 Deflection Testing

-- End of Section Table of Contents --

SECTION 02531

SANITARY SEWERS
**07/02**

PART 1 GENERAL

1.1 REFERENCES

The publications listed below form a part of this specification to the extent referenced. The publications are referred to in the text by the basic designation only.

AMERICAN SOCIETY FOR TESTING AND MATERIALS (ASTM)

| | |
|---|---|
| ASTM C 923 | (2000) Resilient Connectors Between Reinforced Concrete Manhole Structures, Pipes and Laterals |
| ASTM D 2321 | (2000) Practice for Underground Installation of Thermoplastic Pipe for Sewers and Other Gravity-Flow Applications |
| ASTM D 2412 | (1996a) Determination of External Loading Characteristics of Plastic Pipe by Parallel-Plate Loading |
| ASTM D 2680 | (2001) Acrylonitrile-Butadiene-Styrene (ABS) and Poly(Vinyl Chloride) (PVC) Composite Sewer Piping |
| ASTM D 3034 | (2000) Type PSM Poly(Vinyl Chloride) (PVC) Sewer Pipe and Fittings |

UNI-BELL PVC PIPE ASSOCIATION (UBPPA)

| | |
|---|---|
| UBPPA UNI-B-6 | (1990) Recommended Practice for the Low-Pressure Air Testing of Installed Sewer Pipe |

1.2 SYSTEM DESCRIPTION

1.2.1 Sanitary Sewer Gravity Pipeline

Provide sanitary building service piping of of polyvinyl chloride (PVC) plastic pipe.

1.3 GENERAL REQUIREMENTS

The construction required herein shall include appurtenant structures and building sewers to points of connection with the building drains 5 feet outside the building to which the sewer system is to be connected. The Contractor shall replace damaged material and redo unacceptable work at no additional cost to the Government. Excavation and backfilling is specified in Section 02316A EXCAVATION, TRENCHING, AND BACKFILLING FOR UTILITIES SYSTEMS. Backfilling shall be accomplished after inspection by the

Contracting Officer. Before, during, and after installation, plastic pipe and fittings shall be protected from any environment that would result in damage or deterioration to the material. The Contractor shall have a copy of the manufacturer's instructions available at the construction site at all times and shall follow these instructions unless directed otherwise by the Contracting Officer. Solvents, solvent compounds, lubricants, elastomeric gaskets, and any similar materials required to install the plastic pipe shall be stored in accordance with the manufacturer's recommendation and shall be discarded if the storage period exceeds the recommended shelf life. Solvents in use shall be discarded when the recommended pot life is exceeded.

## 1.4 SUBMITTALS

Government approval is required for submittals with a "G" designation; submittals not having a "G" designation are for information only or as otherwise designated. When used, a designation following the "G" designation identifies the office that will review the submittal for the Government. The following shall be submitted in accordance with Section 01330 SUBMITTAL PROCEDURES:

SD-03 Product Data

Pipeline materials including joints, fittings, and couplings

Submit manufacturer's standard drawings or catalog cuts. G-AE

SD-07 Certificates

Joints; G-AE

Certificates of compliance stating that the fittings or gaskets used for waste drains or lines designated on the plans are oil resistant.

## 1.5 DELIVERY, STORAGE, AND HANDLING

### 1.5.1 Delivery and Storage

#### 1.5.1.1 Piping

Inspect materials delivered to site for damage; store with minimum of handling. Store materials on site in enclosures or under protective coverings. Store plastic piping and jointing materials and rubber gaskets under cover out of direct sunlight. Do not store materials directly on the ground. Keep inside of pipes and fittings free of dirt and debris.

### 1.5.2 Handling

Handle pipe, fittings, and other accessories in such manner as to ensure delivery to the trench in sound undamaged condition. Take special care not to damage linings of pipe and fittings; if lining is damaged, make satisfactory repairs. Carry, do not drag, pipe to trench.

# PART 2 PRODUCTS

## 2.1 PIPELINE MATERIALS

Pipe shall conform to the respective specifications and other requirements

specified below.

2.1.1 PVC Plastic Gravity Sewer Piping

2.1.1.1 PVC Plastic Gravity Pipe and Fittings

Conform to ASTM D 3034, SDR 26 with solvent cement joints.

2.2 MISCELLANEOUS MATERIALS

2.2.1 GASKETS AND CONNECTORS

Gaskets for joints between manhole sections shall conform to ASTM C 443. Resilient connectors for making joints between manhole and pipes entering manhole shall conform to ASTM C 923 or ASTM C 990. Joint materials used in structures subject to Jet-fuel exposure shall be fuel resistant.

PART 3 EXECUTION

3.1 INSTALLATION OF PIPELINES AND APPURTENANT CONSTRUCTION

3.1.1 General Requirements for Installation of Pipelines

Apply except where specific exception is made in the following paragraphs entitled "Special Requirements."

3.1.1.1 Location

The work covered by this section shall terminate at a point approximately 5 feet from the building, unless otherwise indicated. Where the location of the sewer is not clearly defined by dimensions on the drawings, do not lay sewer line closer horizontally than 10 feet to a water main or service line. Where sanitary sewer lines pass above water lines, encase sewer in concrete for a distance of 10 feet on each side of the crossing. Where sanitary sewer lines pass below water lines, lay pipe so that no joint in the sewer line will be closer than 3 feet, horizontal distance, to the water line.

a. Sanitary piping installation parallel with water line:

(1) Normal conditions: Sanitary piping or manholes shall be laid at least 10 feet horizontally from a water line whenever possible. The distance shall be measured edge-to-edge.

(2) Unusual conditions: When local conditions prevent a horizontal separation of 10 feet, the sanitary piping or manhole may be laid closer to a water line provided that:

(a) The top (crown) of the sanitary piping shall be at least 18 inches below the bottom (invert) of the water main.

(b) Where this vertical separation cannot be obtained, the sanitary piping shall be constructed of SDR 23.5 PVC pipe pressure tested in place without leakage prior to backfilling.

b. Installation of sanitary piping crossing a water line:

(1) Normal conditions: Lay sanitary piping crossing water lines to provide a separation of at least 18 inches between the top of

the sanitary piping and the bottom of the water line whenever possible.

(2) Unusual conditions: When local conditions prevent a vertical separation described above, use the following construction:

(a) Sanitary piping passing over or under water lines shall be constructed of AWWA-approved ductile iron water pipe, pressure tested in place without leakage prior to backfilling.

(b) Sanitary piping passing over water lines shall, in addition, be protected by providing:

1. A vertical separation of at least 18 inches between the bottom of the sanitary piping and the top of the water line.

2. Adequate structural support for the sanitary piping to prevent excessive deflection of the joints and the settling on and breaking of the water line.

3. That the length, minimum 20 feet, of the sanitary piping be centered at the point of the crossing so that joints shall be equidistant and as far as possible from the water line.

c. Sanitary sewer manholes: No water piping shall pass through or come in contact with any part of a sanitary sewer manhole.

3.1.1.2 Earthwork

Perform earthwork operations in accordance with Section 2316A, Excavation, Trenching and Backfilling for Utilities.

3.1.1.3 Pipe Laying and Jointing

Inspect each pipe and fitting before and after installation; replace those found defective and remove from site. Provide proper facilities for lowering sections of pipe into trenches. Lay nonpressure pipe with the bell ends in the upgrade direction. Adjust spigots in bells to give a uniform space all around. Blocking or wedging between bells and spigots will not be permitted. Replace by one of the proper dimensions, pipe or fittings that do not allow sufficient space for installation of joint material. At the end of each work day, close open ends of pipe temporarily with wood blocks or bulkheads. Provide batterboards not more than 25 feet apart in trenches for checking and ensuring that pipe invert elevations are as indicated. Laser beam method may be used in lieu of batterboards for the same purpose.

Branch connections shall be made by use of regular fittings or solvent cemented saddles as approved. Saddles for PVC pipe shall conform to Figure 2 of ASTM D 2680; and saddles for PVC pipe shall conform to Table 4 of ASTM D 3034.

3.1.1.4 Connections to Existing Lines

Obtain approval from the Contracting Officer before making connection to existing line. Conduct work so that there is minimum interruption of service on existing line.

3.1.2 Special Requirements

3.1.2.1 Installation of PVC Plastic Piping

Install pipe and fittings in accordance with paragraph entitled "General Requirements for Installation of Pipelines" of this section and with the requirements of ASTM D 2321 for laying and joining pipe and fittings. Make joints with the gaskets specified for joints with this piping and assemble in accordance with the requirements of ASTM D 2321 for assembly of joints. Make joints to other pipe materials in accordance with the recommendations of the plastic pipe manufacturer.

3.1.3 Miscellaneous Construction and Installation

3.1.3.1 Connecting to Existing Manholes

Pipe connections to existing manholes shall be made using a core drill and rubber gasket so that finished connection is tight and the existing structure is not damaged.

3.2 FIELD QUALITY CONTROL

3.2.1 Field Tests and Inspections

The Contracting Officer will conduct field inspections and witness field tests specified in this section. The Contractor shall perform field tests and provide labor, equipment, and incidentals required for testing. Be able to produce evidence, when required, that each item of work has been constructed in accordance with the drawings and specifications.

3.2.2 Tests for Sanitary Piping

Check each straight run of pipeline for gross deficiencies by holding a light in a manhole; it shall show a practically full circle of light through the pipeline when viewed from the adjoining end of line.

3.2.2.1 Leakage Tests

Test lines for leakage by low-pressure air tests. Prior to testing for leakage, backfill trench up to at least lower half of pipe. When necessary to prevent pipeline movement during testing, place additional backfill around pipe sufficient to prevent movement, but leaving joints uncovered to permit inspection. When leakage or pressure drop exceeds the allowable amount specified, make satisfactory correction and retest pipeline section in the same manner. Correct visible leaks regardless of leakage test results.

Low-pressure air tests: Perform tests as follows:

(1) PVC plastic pipelines: Test in accordance with UBPPA UNI-B-6. Allowable pressure drop shall be as given in UBPPA UNI-B-6. Make calculations in accordance with the Appendix to UBPPA UNI-B-6.

3.2.2.2 Deflection Testing

Perform a deflection test on entire length of installed plastic pipeline on completion of work adjacent to and over the pipeline, including leakage tests, backfilling, placement of fill, grading, paving, concreting, and any

other superimposed loads determined in accordance with ASTM D 2412. Deflection of pipe in the installed pipeline under external loads shall not exceed 4.5 percent of the average inside diameter of pipe. Determine whether the allowable deflection has been exceeded by use of a pull-through device or a deflection measuring device.

a. Pull-through device: This device shall be a spherical, spheroidal, or elliptical ball, a cylinder, or circular sections fused to a common shaft. Circular sections shall be so spaced on the shaft that distance from external faces of front and back sections will equal or exceed diameter of the circular section. Pull-through device may also be of a design promulgated by the Uni-Bell Plastic Pipe Association, provided the device meets the applicable requirements specified in this paragraph, including those for diameter of the device, and that the mandrel has a minimum of 9 arms. Ball, cylinder, or circular sections shall conform to the following:

(1) A diameter, or minor diameter as applicable, of 95 percent of the average inside diameter of the pipe; tolerance of plus 0.5 percent will be permitted.

(2) Homogeneous material throughout, shall have a density greater than 1.0 as related to water at 39.2 degrees F, and shall have a surface Brinell hardness of not less than 150.

(3) Center bored and through-bolted with a 1/4 inch minimum diameter steel shaft having a yield strength of not less than 70,000 pounds per square inch, with eyes or loops at each end for attaching pulling cables.

(4) Each eye or loop shall be suitably backed with a flange or heavy washer such that a pull exerted on opposite end of shaft will produce compression throughout remote end.

b. Deflection measuring device: Sensitive to 1.0 percent of the diameter of the pipe being tested and shall be accurate to 1.0 percent of the indicated dimension. Deflection measuring device shall be approved prior to use.

c. Pull-through device procedure: Pass the pull-through device through each run of pipe, either by pulling it through or flushing it through with water. If the device fails to pass freely through a pipe run, replace pipe which has the excessive deflection and completely retest in same manner and under same conditions.

d. Deflection measuring device procedure: Measure deflections through each run of installed pipe. If deflection readings in excess of 4.5 percent of average inside diameter of pipe are obtained, retest pipe by a run from the opposite direction. If retest continues to show a deflection in excess of 4.5 percent of average inside diameter of pipe, replace pipe which has excessive deflection and completely retest in same manner and under same conditions.

-- End of Section --

SECTION TABLE OF CONTENTS

DIVISION 02 - SITE CONSTRUCTION

SECTION 02630A

STORM AND CONTAINMENT DRAINAGE SYSTEM

**03/00**

PART 1 GENERAL

1.1 SUBMITTALS
1.2 DELIVERY, STORAGE, AND HANDLING
1.2.1 Delivery and Storage
1.2.2 Handling

PART 2 PRODUCTS

2.1 PIPE FOR STORM AND CONTAINMENT DRAINS
2.2 DRAINAGE STRUCTURES
2.2.1 Precast Reinforced Concrete Box
2.3 MISCELLANEOUS MATERIALS
2.3.1 Concrete
2.3.2 Mortar
2.3.3 Precast Reinforced Concrete Manholes
2.3.4 Frame and Cover for Gratings
2.3.5 Joints
2.3.5.1 Flexible Watertight Joints
2.4 RESILIENT CONNECTORS

PART 3 EXECUTION

3.1 EXCAVATION FOR PIPE CULVERTS, STORM DRAINS, AND DRAINAGE STRUCTURES
3.1.1 Trenching
3.1.2 Removal of Rock
3.1.3 Removal of Unstable Material
3.2 BEDDING
3.2.1 Plastic Pipe
3.3 PLACING PIPE
3.3.1 Laying PVC & HDPE Pipe
3.4 DRAINAGE STRUCTURES
3.4.1 Manholes and Inlets
3.4.2 Walls and Headwalls
3.5 BACKFILLING
3.5.1 Backfilling Pipe in Trenches
3.5.2 Backfilling Pipe in Fill Sections
3.5.3 Movement of Construction Machinery
3.5.4 Compaction
3.5.4.1 General
3.5.4.2 Minimum Density
3.5.5 Determination of Density
3.6 PIPELINE TESTING

-- End of Section Table of Contents --

SECTION 02630A

STORM AND CONTAINMENT DRAINAGE SYSTEM
**03/00**

PART 1 GENERAL

1.1 SUBMITTALS

Government approval is required for submittals with a "G" designation; submittals not having a "G" designation are for information only. When used, a designation following the "G" designation identifies the office that will review the submittal for the Government. The following shall be submitted in accordance with Section 01330 SUBMITTAL PROCEDURES:

SD-03 Product Data

Placing Pipe; G-AE

Printed copies of the manufacturer's product literature and recommendations for installation procedures of the material being placed, prior to installation.

Pipe for Storm and Containment Drains

Frame and Cover for Gratings

Determination of Density

Pipeline Testing

1.2 DELIVERY, STORAGE, AND HANDLING

1.2.1 Delivery and Storage

Materials delivered to site shall be inspected for damage, unloaded, and stored with a minimum of handling. Materials shall not be stored directly on the ground. The inside of pipes and fittings shall be kept free of dirt and debris. Before, during, and after installation, plastic pipe and fittings shall be protected from any environment that would result in damage or deterioration to the material. The Contractor shall have a copy of the manufacturer's instructions available at the construction site at all times and shall follow these instructions unless directed otherwise by the Contracting Officer. Solvents, solvent compounds, lubricants, elastomeric gaskets, and any similar materials required to install plastic pipe shall be stored in accordance with the manufacturer's recommendations and shall be discarded if the storage period exceeds the recommended shelf life. Solvents in use shall be discarded when the recommended pot life is exceeded.

1.2.2 Handling

Materials shall be handled in a manner that ensures delivery to the trench in sound, undamaged condition. Pipe shall be carried to the trench, not dragged.

# PART 2 PRODUCTS

## 2.1 PIPE FOR STORM AND CONTAINMENT DRAINS

Pipe for storm drains shall be Iron Pipe Size (IPS) DR 26 PVC or HDPE pipe as shown on project drawings of the sizes indicated and shall conform to the requirements specified. PVC pipe shall conform to ASTM D 3034 and have solvent cement joints. HDPE shall conform to ASTM D3035, PE 3408 and have heat fusion joints. All drain system piping noted as containment drain system piping on the plans shall be constructed using HDPE pipe.

## 2.2 DRAINAGE STRUCTURES

### 2.2.1 Precast Reinforced Concrete Box

For truck loadings with 2 feet of cover or more, or subjected to dead load only, ASTM C 789; for less than 2 feet of cover subjected to truck loading, ASTM C 850.

## 2.3 MISCELLANEOUS MATERIALS

### 2.3.1 Concrete

Unless otherwise specified, concrete and reinforced concrete shall conform to the requirements for 4000 psi concrete under Section 03300 CAST-IN-PLACE STRUCTURAL CONCRETE. The concrete mixture shall have air content by volume of concrete, based on measurements made immediately after discharge from the mixer, of 5 to 7 percent. Air content shall be determined in accordance with ASTM C 231. The concrete covering over steel reinforcing shall not be less than 1 inch thick for top slabs and not less than 1-1/2 inches thick for walls and flooring. Concrete deposited directly against the ground shall have a covering thickness of at least 3 inches between steel and ground. Expansion-joint filler material shall conform to ASTM D 1751, or ASTM D 1752, or shall be resin-impregnated fiberboard conforming to the physical requirements of ASTM D 1752.

### 2.3.2 Mortar

Mortar for pipe joints and connections to other drainage structures shall conform to ASTM C 270, Type M, except that the maximum placement time shall be 1 hour. The quantity of water in the mixture shall be sufficient to produce a stiff workable mortar but in no case shall exceed 6 gallons of water per sack of cement. Water shall be clean and free of harmful acids, alkalies, and organic impurities. The mortar shall be used within 30 minutes after the ingredients are mixed with water. The inside of the joint shall be wiped clean and finished smooth. The mortar head on the outside shall be protected from air and sun with a proper covering until satisfactorily cured.

### 2.3.3 Precast Reinforced Concrete Manholes

Precast reinforced concrete manholes shall conform to ASTM C 478. Joints between precast concrete risers and tops shall be made with flexible watertight, fuel resistan rubber-type gaskets meeting the requirements of paragraph JOINTS.

2.3.4 Frame and Cover for Gratings

Frame and cover for gratings shall be cast gray iron, ASTM A 48, Class 35B; cast ductile iron, ASTM A 536, Grade 65-45-12; or cast aluminum, ASTM B 26/B 26M, Alloy 356.OT6. Shape, size, and waterway openings for grates and curb inlets shall be as indicated on the plans.

2.3.5 Joints

2.3.5.1 Flexible Watertight Joints

a. Materials: Joints shall be solvent cement type for PVC pipe and heat fusion for HDPE. Gaskets for isolation valve mechanical joints shall be jet-fuel resistant rubber.

b. Test Requirements: Watertight joints shall be tested and shall meet test requirements of paragraph HYDROSTATIC TEST ON WATERTIGHT JOINTS. Certified copies of test results shall be delivered to the Contracting Officer before gaskets or jointing materials are installed.

2.4 RESILIENT CONNECTORS

Flexible, watertight connectors shall be used for connecting storm pipe to manholes and inlets shall be manufactured using jet-fuel resistant rubber compounds and conform to ASTM C 923. HDPE pipe connections to manholes shall be made using intergrally cast HDPE wall sleeves with waterstop/thrust rings.

PART 3 EXECUTION

3.1 EXCAVATION FOR PIPE CULVERTS, STORM DRAINS, AND DRAINAGE STRUCTURES

Excavation of trenches, and for appurtenances and backfilling for culverts and storm drains, shall be in accordance with the applicable portions of Section 02316A "Excavation, Trenching, and Backfilling for Utilities Systems" and the requirements specified below.

3.1.1 Trenching

The width of trenches at any point below the top of the pipe shall be not greater than the outside diameter of the pipe plus 12 inches to permit satisfactory jointing and thorough tamping of the bedding material under and around the pipe. Sheeting and bracing, where required, shall be placed within the trench width as specified. Contractor shall not overexcavate. Where trench widths are exceeded, redesign with a resultant increase in cost of stronger pipe or special installation procedures will be necessary. Cost of this redesign and increased cost of pipe or installation shall be borne by the Contractor without additional cost to the Government.

3.1.2 Removal of Rock

Rock in either ledge or boulder formation shall be replaced with suitable materials to provide a compacted earth cushion having a thickness between unremoved rock and the pipe of at least 8 inches or 1/2 inch for each foot of fill over the top of the pipe, whichever is greater, but not more than three-fourths the nominal diameter of the pipe. Where bell-and-spigot pipe is used, the cushion shall be maintained under the bell as well as under the straight portion of the pipe. Rock excavation shall be as

specified and defined in Section 02316A "Excavation, Trenching, and Backfilling for Utilities Systems".

3.1.3 Removal of Unstable Material

Where wet or otherwise unstable soil incapable of properly supporting the pipe, as determined by the Contracting Officer, is unexpectedly encountered in the bottom of a trench, such material shall be removed to the depth required and replaced to the proper grade with select granular material, compacted as provided in paragraph BACKFILLING. When removal of unstable material is due to the fault or neglect of the Contractor in his performance of shoring and sheeting, water removal, or other specified requirements, such removal and replacement shall be performed at no additional cost to the government.

3.2 BEDDING

The bedding surface for the pipe shall provide a firm foundation of uniform density throughout the entire length of the pipe.

3.2.1 Plastic Pipe

Bedding for PVC and PE pipe shall be clean sand conforming to ASTM C33 or ASTM C144.

3.3 PLACING PIPE

Each pipe shall be thoroughly examined before being laid; defective or damaged pipe shall not be used. Plastic pipe shall be protected from exposure to direct sunlight prior to laying, if necessary to maintain adequate pipe stiffness and meet installation deflection requirements. Pipelines shall be laid to the grades and alignment indicated. Proper facilities shall be provided for lowering sections of pipe into trenches. Lifting lugs in vertically elongated metal pipe shall be placed in the same vertical plane as the major axis of the pipe. Pipe shall not be laid in water, and pipe shall not be laid when trench conditions or weather are unsuitable for such work. Diversion of drainage or dewatering of trenches during construction shall be provided as necessary. Deflection of installed flexible pipe shall not exceed the following limits:

| TYPE OF PIPE | MAXIMUM ALLOWABLE DEFLECTION (%) |
|---|---|
| Plastic | 7.5 |

Not less than 30 days after the completion of backfilling, the Government may perform a deflection test on the entire length of installed flexible pipe using a mandrel or other suitable device. Installed flexible pipe showing deflections greater than those indicated above shall be retested by a run from the opposite direction. If the retest also fails, the suspect pipe shall be replaced at no cost to the Government.

3.3.1 Laying PVC & HDPE Pipe

Laying shall proceed upgrade with spigot ends of bell-and-spigot pipe pointing in the direction of the flow.

## 3.4 DRAINAGE STRUCTURES

### 3.4.1 Manholes and Inlets

Construction shall be of reinforced concrete, complete with frames and covers, gratings and steps as indicated. Pipe connections to concrete manholes and inlets shall be made with flexible, watertight fuel resistant connectors or as otherwise indicated on the plans.

### 3.4.2 Walls and Headwalls

Construction shall be as indicated.

## 3.5 BACKFILLING

### 3.5.1 Backfilling Pipe in Trenches

After the pipe has been properly bedded, selected material from excavation or borrow, at the appropriate moisture content for compaction, shall be placed. The remainder of the trench shall be backfilled and compacted by spreading and rolling or compacted by mechanical rammers or tampers in layers not exceeding 8 inches. Tests for density shall be made as necessary to ensure conformance to the compaction requirements specified below. Where it is necessary, in the opinion of the Contracting Officer, that sheeting or portions of bracing used be left in place, the contract will be adjusted accordingly. Untreated sheeting shall not be left in place beneath structures or pavements.

### 3.5.2 Backfilling Pipe in Fill Sections

For pipe placed in fill sections, backfill material and the placement and compaction procedures shall be as specified below. The fill material shall be uniformly spread in layers longitudinally on both sides of the pipe, not exceeding 6 inches in compacted depth, and shall be compacted by rolling parallel with pipe or by mechanical tamping or ramming. Prior to commencing normal filling operations, the crown width of the fill at a height of 12 inches above the top of the pipe shall extend a distance of not less than twice the outside pipe diameter on each side of the pipe or 12 feet, whichever is less. After the backfill has reached at least 12 inches above the top of the pipe, the remainder of the fill shall be placed and thoroughly compacted in layers not exceeding 8 inches.

### 3.5.3 Movement of Construction Machinery

When compacting by rolling or operating heavy equipment parallel with the pipe, displacement of or injury to the pipe shall be avoided. Movement of construction machinery over a culvert or storm drain at any stage of construction shall be at the Contractor's risk. Any damaged pipe shall be repaired or replaced.

### 3.5.4 Compaction

#### 3.5.4.1 General

Cohesionless materials include gravels, gravel-sand mixtures, sands, and gravelly sands. Cohesive materials include clayey and silty gravels, gravel-silt mixtures, clayey and silty sands, sand-clay mixtures, clays, silts, and very fine sands. When results of compaction tests for moisture-density relations are recorded on graphs, cohesionless soils will

show straight lines or reverse-shaped moisture-density curves, and cohesive soils will show normal moisture-density curves.

3.5.4.2 Minimum Density

Backfill over and around the pipe and backfill around and adjacent to drainage structures shall be compacted at the approved moisture content to the following applicable minimum density, which will be determined as specified below.

a. Under airfield and heliport pavements, paved roads, streets, parking areas, and similar-use pavements including adjacent shoulder areas, the density shall be not less than 90 percent of maximum density for cohesive material and 95 percent of maximum density for cohesionless material, up to the elevation where requirements for pavement subgrade materials and compaction shall control.

b. Under unpaved or turfed traffic areas, density shall not be less than 90 percent of maximum density for cohesive material and 95 percent of maximum density for cohesionless material.

c. Under nontraffic areas, density shall be not less than that of the surrounding material.

3.5.5 Determination of Density

Testing shall be the responsibility of the Contractor and performed at no additional cost to the Government. Testing shall be performed by an approved commercial testing laboratory or by the Contractor subject to approval. Tests shall be performed in sufficient number to ensure that specified density is being obtained. Laboratory tests for moisture-density relations shall be made in accordance with ASTM D 1557 except that mechanical tampers may be used provided the results are correlated with those obtained with the specified hand tamper. Field density tests shall be determined in accordance with ASTM D 2167 or ASTM D 2922. When ASTM D 2922 is used, the calibration curves shall be checked and adjusted, if necessary, using the sand cone method as described in paragraph Calibration of the referenced publications. ASTM D 2922 results in a wet unit weight of soil and when using this method ASTM D 3017 shall be used to determine the moisture content of the soil. The calibration curves furnished with the moisture gauges shall be checked along with density calibration checks as described in ASTM D 3017 or ASTM D 2922. Test results shall be furnished the Contracting Officer. The calibration checks of both the density and moisture gauges shall be made at the beginning of a job on each different type of material encountered and at intervals as directed.

3.6 PIPELINE TESTING

Lines shall be tested for leakage by low pressure air or water testing or exfiltration tests, as appropriate. Low pressure air testing for plastic pipe shall conform to ASTM F 1417. Prior to tests, the trench shall be backfilled up to at least the lower half of the pipe. If required, sufficient additional backfill shall be placed to prevent pipe movement during testing, leaving the joints uncovered to permit inspection. Visible leaks encountered shall be corrected regardless of leakage test results.

An exfiltration test shall be made by filling the line to be tested with water so that a head of at least 2 feet is provided above both the water

table and the top of the pipe at the upper end of the pipeline to be tested. The filled line shall be allowed to stand until the pipe has reached its maximum absorption, but not less than 4 hours. After absorption, the head shall be reestablished. The amount of water required to maintain this water level during a 2-hour test period shall be measured. Leakage as measured by the exfiltration test shall not exceed 0.05 gallons per inch in diameter per 1000 feet of pipeline per hour. When leakage exceeds the maximum amount specified, satisfactory correction shall be made and retesting accomplished. Testing, correcting, and retesting shall be made at no additional cost to the Government.

-- End of Section --

SECTION TABLE OF CONTENTS

DIVISION 02 - SITE CONSTRUCTION

SECTION 02722A

GRADED-CRUSHED AGGREGATE BASE COURSE

**05/01**

PART 1 GENERAL

1.1 REFERENCES
1.2 DEFINITIONS
1.2.1 Aggregate Base Course
1.2.2 Graded-crushed Aggregate Base Course
1.2.3 Degree of Compaction
1.3 SUBMITTALS
1.4 SAMPLING AND TESTING
1.4.1 Sampling
1.4.2 Tests
1.4.2.1 Sieve Analysis
1.4.2.2 Liquid Limit and Plasticity Index
1.4.2.3 Moisture-Density Determinations
1.4.2.4 Field Density Tests
1.4.2.5 Wear Test
1.4.2.6 Soundness
1.4.2.7 Weight of Slag
1.4.3 Testing Frequency
1.4.3.1 Initial Tests
1.4.3.2 In Place Tests
1.4.4 Approval of Material
1.5 WEATHER LIMITATIONS
1.6 PLANT, EQUIPMENT, AND TOOLS

PART 2 PRODUCTS

2.1 AGGREGATES
2.1.1 Coarse Aggregate
2.1.1.1 Graded-Crushed Aggregate Base Course
2.1.2 Fine Aggregate
2.1.3 Gradation Requirements
2.1.4 Liquid Limit and Plasticity Index

PART 3 EXECUTION

3.1 GENERAL REQUIREMENTS
3.2 OPERATION OF AGGREGATE SOURCES
3.3 STOCKPILING MATERIAL
3.4 PREPARATION OF UNDERLYING COURSE
3.5 INSTALLATION
3.5.1 Mixing the Materials
3.5.2 Placing
3.5.3 Grade Control
3.5.4 Edges of Base Course
3.5.5 Compaction

3.5.6 Thickness
3.5.7 Proof Rolling
3.5.8 Finishing
3.5.9 Smoothness
3.6 TRAFFIC
3.7 MAINTENANCE
3.8 DISPOSAL OF UNSATISFACTORY MATERIALS

-- End of Section Table of Contents --

SECTION 02722A

GRADED-CRUSHED AGGREGATE BASE COURSE
**05/01**

PART 1 GENERAL

1.1 REFERENCES

The publications listed below form a part of this specification to the extent referenced. The publications are referred to in the text by basic designation only.

AMERICAN ASSOCIATION OF STATE HIGHWAY AND TRANSPORTATION OFFICIALS (AASHTO)

| | |
|---|---|
| AASHTO T 180 | (1997) Moisture-Density Relations of Soils Using a 4.54-kg (10-lb) Rammer and an 457 mm (18-in) Drop |
| AASHTO T 224 | (1996) Correction for Coarse Particles in the Soil Compaction Test |

AMERICAN SOCIETY FOR TESTING AND MATERIALS (ASTM)

| | |
|---|---|
| ASTM C 29/C 29M | (1997) Bulk Density ("Unit Weight") and Voids in Aggregates |
| ASTM C 88 | (1999a) Soundness of Aggregates by Use of Sodium Sulfate or Magnesium Sulfate |
| ASTM C 117 | (1995) Materials Finer Than 75 micrometer (No. 200) Sieve in Mineral Aggregates by Washing |
| ASTM C 127 | (1988; R 1993el) Specific Gravity and Absorption of Course Aggregate |
| ASTM C 128 | (1997) Specific Gravity and Absorption of Fine Aggregate |
| ASTM C 131 | (1996) Resistance to Degradation of Small-Size Coarse Aggregate by Abrasion and Impact in the Los Angeles Machine |
| ASTM C 136 | (1996a) Sieve Analysis of Fine and Coarse Aggregates |
| ASTM D 75 | (1987; R 1997) Sampling Aggregates |
| ASTM D 1556 | (2000) Density and Unit Weight of Soil in Place by the Sand-Cone Method |
| ASTM D 2167 | (1994) Density and Unit Weight of Soil in Place by the Rubber Balloon Method |

| | |
|---|---|
| ASTM D 2487 | (2000) Classification of Soils for Engineering Purposes (Unified Soil Classification System) |
| ASTM D 2922 | (1996el) Density of Soil and Soil-Aggregate in Place by Nuclear Methods (Shallow Depth) |
| ASTM D 3017 | (1988; R 1996el) Water Content of Soil and Rock in Place by Nuclear Methods (Shallow Depth) |
| ASTM D 4318 | (2000) Liquid Limit, Plastic Limit, and Plasticity Index of Soils |
| ASTM E 11 | (1995) Wire-Cloth Sieves for Testing Purposes |

## 1.2 DEFINITIONS

For the purposes of this specification, the following definitions apply.

### 1.2.1 Aggregate Base Course

Aggregate base course (ABC) is well graded, durable aggregate uniformly moistened and mechanically stabilized by compaction.

### 1.2.2 Graded-crushed Aggregate Base Course

Graded-crushed aggregate (GCA) base course is well graded, crushed, durable aggregate uniformly moistened and mechanically stabilized by compaction. GCA is similar to ABC, but it has more stringent requirements and it produces a base course with higher strength and stability.

### 1.2.3 Degree of Compaction

Degree of compaction shall be expressed as a percentage of the maximum density obtained by the test procedure presented in AASHTO T 180, Method D and corrected with AASHTO T 224.

## 1.3 SUBMITTALS

Government approval is required for submittals with a "G" designation; submittals not having a "G" designation are for information only. When used, a designation following the "G" designation identifies the office that will review the submittal for the Government. The following shall be submitted in accordance with Section 01330 SUBMITTAL PROCEDURES:

SD-03 Product Data

Plant, Equipment, and Tools; G

List of proposed equipment to be used in performance of construction work, including descriptive data.

Waybills and Delivery Tickets; G

Copies of waybills and delivery tickets during the progress of

the work. Before the final statement is allowed, the Contractor shall file certified waybills and certified delivery tickets for all aggregates actually used.

SD-06 Test Reports

Sampling and testing; G-AE
Field Density Tests; G

Calibration curves and related test results prior to using the device or equipment being calibrated. Copies of field test results within 24 hours after the tests are performed. Certified copies of test results for approval not less than 30 days before material is required for the work.

## 1.4 SAMPLING AND TESTING

Sampling and testing shall be the responsibility of the Contractor. Sampling and testing shall be performed by a testing laboratory approved in accordance with Section 01451 CONTRACTOR QUALITY CONTROL. Work requiring testing will not be permitted until the testing laboratory has been inspected and approved. The materials shall be tested to establish compliance with the specified requirements; testing shall be performed at the specified frequency. The Contracting Officer may specify the time and location of the tests. Copies of test results shall be furnished to the Contracting Officer within 24 hours of completion of the tests.

### 1.4.1 Sampling

Samples for laboratory testing shall be taken in conformance with ASTM D 75. When deemed necessary, the sampling will be observed by the Contracting Officer.

### 1.4.2 Tests

The following tests shall be performed in conformance with the applicable standards listed.

#### 1.4.2.1 Sieve Analysis

Sieve analysis shall be made in conformance with ASTM C 117 and ASTM C 136. Sieves shall conform to ASTM E 11.

#### 1.4.2.2 Liquid Limit and Plasticity Index

Liquid limit and plasticity index shall be determined in accordance with ASTM D 4318.

#### 1.4.2.3 Moisture-Density Determinations

The maximum density and optimum moisture content shall be determined in accordance with AASHTO T 180, Method D and corrected with AASHTO T 224. To maintain the same percentage of coarse material, the "remove and replace" procedure as described in the NOTE 8 in Paragraph 7.2 of AASHTO T 180 shall be used.

#### 1.4.2.4 Field Density Tests

Density shall be field measured in accordance with ASTM D 1556, ASTM D 2167,

or ASTM D 2922. For the method presented in ASTM D 1556 the base plate as shown in the drawing shall be used. For the method presented in ASTM D 2922 the calibration curves shall be checked and adjusted if necessary using only the sand cone method as described in paragraph Calibration, of the ASTM publication. Tests performed in accordance with ASTM D 2922 result in a wet unit weight of soil and when using this method, ASTM D 3017 shall be used to determine the moisture content of the soil. The calibration curves furnished with the moisture gauges shall also be checked along with density calibration checks as described in ASTM D 3017. The calibration checks of both the density and moisture gauges shall be made by the prepared containers of material method, as described in paragraph Calibration of ASTM D 2922, on each different type of material being tested at the beginning of a job and at intervals as directed.

1.4.2.5 Wear Test

Wear tests shall be made on GCA (Graded Crushed Aggregate) course material in conformance with ASTM C 131.

1.4.2.6 Soundness

Soundness tests shall be made on GCA in accordance with ASTM C 88.

1.4.2.7 Weight of Slag

Weight per cubic foot of slag shall be determined in accordance with ASTM C 29/C 29M on the GCA course material.

1.4.3 Testing Frequency

1.4.3.1 Initial Tests

One of each of the following tests shall be performed on the proposed material prior to commencing construction to demonstrate that the proposed material meets all specified requirements when furnished. If materials from more than one source are going to be utilized, this testing shall be completed for each source.

a. Sieve Analysis including No. 635 size material.

b. Liquid limit and plasticity index.

c. Moisture-density relationship.

d. Wear.

e. Soundness.

f. Weight per cubic foot of Slag.

1.4.3.2 In Place Tests

Each of the following tests shall be performed on samples taken from the placed and compacted GCA. Samples shall be taken and tested at the rates indicated.

a. Density tests shall be performed on every lift of material placed and at a frequency of one set of tests for every 150 square yards, or

portion thereof, of completed area.

b. Sieve Analysis including No. 635 size material shall be performed for every 500 tons, or portion thereof, of material placed.

c. Liquid limit and plasticity index tests shall be performed at the same frequency as the sieve analysis.

1.4.4 Approval of Material

The source of the material shall be selected 45 days prior to the time the material will be required in the work. Tentative approval of material will be based on initial test results. Final approval of the materials will be based on sieve analysis, liquid limit, and plasticity index tests performed on samples taken from the completed and fully compacted GCA.

1.5 WEATHER LIMITATIONS

Construction shall be done when the atmospheric temperature is above 35 degrees F. When the temperature falls below 35 degrees F, the Contractor shall protect all completed areas by approved methods against detrimental effects of freezing. Completed areas damaged by freezing, rainfall, or other weather conditions shall be corrected to meet specified requirements.

1.6 PLANT, EQUIPMENT, AND TOOLS

All plant, equipment, and tools used in the performance of the work will be subject to approval before the work is started and shall be maintained in satisfactory working condition at all times. The equipment shall be adequate and shall have the capability of producing the required compaction, meeting grade controls, thickness control, and smoothness requirements as set forth herein.

PART 2 PRODUCTS

2.1 AGGREGATES

The GCA shall consist of clean, sound, durable particles of crushed stone, crushed slag, crushed gravel, crushed recycled concrete, angular sand, or other approved material. GCA shall be free of silt and clay as defined by ASTM D 2487, organic matter, and other objectionable materials or coatings. The portion retained on the No. 4 sieve shall be known as coarse aggregate; that portion passing the No. 4 sieve shall be known as fine aggregate.

2.1.1 Coarse Aggregate

Coarse aggregates shall be angular particles of uniform density. When the coarse aggregate is supplied from more than one source, aggregate from each source shall meet the specified requirements and shall be stockpiled separately.

a. Crushed Gravel: Crushed gravel shall be manufactured by crushing gravels, and shall meet all the requirements specified below.

b. Crushed Stone: Crushed stone shall consist of freshly mined quarry rock, and shall meet all the requirements specified below.

c. Crushed Recycled Concrete: Crushed recycled concrete shall

consist of previously hardened portland cement concrete or other concrete containing pozzolanic binder material. The recycled material shall be free of all reinforcing steel, bituminous concrete surfacing, and any other foreign material and shall be crushed and processed to meet the required gradations for coarse aggregate. Crushed recycled concrete shall meet all other applicable requirements specified below.

d. Crushed Slag: Crushed slag shall be an air-cooled blast-furnace product having an air dry unit weight of not less than 65 pcf as determined by ASTM C 29/C 29M, and shall meet all the requirements specified below.

2.1.1.1 Graded-Crushed Aggregate Base Course

GCA coarse aggregate shall not show more than 40 percent loss when subjected to the Los Angeles abrasion test in accordance with ASTM C 131. GCA coarse aggregate shall not exhibit a loss greater than 40 percent weighted average, at five cycles, when tested for soundness in magnesium sulfate in accordance with ASTM C 88. The amount of flat and elongated particles shall not exceed 20 percent for the fraction retained on the 1/2 inch sieve nor 20 percent for the fraction passing the 1/2 inch sieve. A flat particle is one having a ratio of width to thickness greater than 3; an elongated particle is one having a ratio of length to width greater than 3. In the portion retained on each sieve specified, the crushed aggregate shall contain at least 90 percent by weight of crushed pieces having two or more freshly fractured faces with the area of each face being at least equal to 75 percent of the smallest midsectional area of the piece. When two fractures are contiguous, the angle between planes of the fractures must be at least 30 degrees in order to count as two fractured faces. Crushed gravel shall be manufactured from gravel particles 90 percent of which by weight are retained on the maximum size sieve listed in TABLE 1.

2.1.2 Fine Aggregate

Fine aggregates shall be angular particles of uniform density. When the fine aggregate is supplied from more than one source, aggregate from each source shall meet the specified requirements.

2.1.3 Gradation Requirements

The specified gradation requirements shall apply to the completed base course. The aggregates shall have a maximum size of 1.5 inches and shall be continuously well graded within the limits specified in TABLE 1. Sieves shall conform to ASTM E 11. Use gradation No. 2 for all airside ramp and taxiway base courses. Gradation No. 2 or No. 3 may be used for road and parking lot base course.

TABLE I. GRADATION OF AGGREGATES

Percentage by Weight Passing Square-Mesh Sieve

| Sieve Designation | No. 2 | No. 3 |
|---|---|---|
| 2 inch | --- | ---- |
| 1-1/2 inch | 100 | ---- |
| 1 inch | 60-100 | 100 |
| 1/2 inch | 30-65 | 40-70 |

TABLE I. GRADATION OF AGGREGATES

Percentage by Weight Passing Square-Mesh Sieve

| Sieve Designation | No. 2 | No. 3 |
|---|---|---|
| No. 4 | 20-50 | 20-50 |
| No. 10 | 15-40 | 15-40 |
| No. 40 | 5-25 | 5-25 |
| No. 200 | 0-8 | 0-8 |

NOTE 1: Particles having diameters less than 0.0008 inch shall not be in excess of 3 percent by weight of the total sample tested.

NOTE 2: The values are based on aggregates of uniform specific gravity. If materials from different sources are used for the coarse and fine aggregates, they shall be tested in accordance with ASTM C 127 and ASTM C 128 to determine their specific gravities. If the specific gravities vary by more than 10 percent, the percentages passing the various sieves shall be corrected as directed by the Contracting Officer.

2.1.4 Liquid Limit and Plasticity Index

Liquid limit and plasticity index requirements shall apply to the completed course and shall also apply to any component that is blended to meet the required gradation. The portion of any component or of the completed course passing the No. 40 sieve shall be either nonplastic or have a liquid limit not greater than 25 and a plasticity index not greater than 5.

PART 3 EXECUTION

3.1 GENERAL REQUIREMENTS

When the GCA is constructed in more than one layer, the previously constructed layer shall be cleaned of loose and foreign matter by sweeping with power sweepers or power brooms, except that hand brooms may be used in areas where power cleaning is not practicable. Adequate drainage shall be provided during the entire period of construction to prevent water from collecting or standing on the working area. Line and grade stakes shall be provided as necessary for control. Grade stakes shall be in lines parallel to the centerline of the area under construction and suitably spaced for string lining.

3.2 OPERATION OF AGGREGATE SOURCES

Aggregate sources shall be cleared, stripped and excavated to working depths producing excavation faces that are as nearly vertical as practicable for the materials being excavated. Strata of unsuitable materials overlying or occurring in the deposit shall be wasted. Methods of operating aggregate sources, and the processing and blending of the materials, shall be changed or modified if necessary to obtain material conforming to the specified requirements. Upon completion of the work, aggregate sources shall be conditioned to drain readily and be left in a satisfactory condition. Aggregates shall be obtained from offsite sources.

## 3.3 STOCKPILING MATERIAL

Prior to stockpiling of material, storage sites shall be cleared and leveled by the Contractor. All materials, including approved material available from excavation and grading, shall be stockpiled in the manner and at the locations designated. Aggregates shall be stockpiled on the cleared and leveled areas designated by the Contracting Officer to prevent segregation. Materials obtained from different sources shall be stockpiled separately.

## 3.4 PREPARATION OF UNDERLYING COURSE

Prior to constructing the GCA, the underlying course or subgrade shall be cleaned of all foreign substances. At the time of construction of the GCA, the underlying course shall contain no frozen material. The surface of the underlying course or subgrade shall meet specified compaction and surface tolerances. The underlying subgrade shall conform to Section 02300A EARTHWORK. Ruts or soft yielding spots in the underlying courses, areas having inadequate compaction, and deviations of the surface from the requirements set forth herein shall be corrected by loosening and removing soft or unsatisfactory material and by adding approved material, reshaping to line and grade, and recompacting to specified density requirements. For cohesionless underlying courses containing sands or gravels, as defined in ASTM D 2487, the surface shall be stabilized prior to placement of the GCA. Stabilization shall be accomplished by mixing GCA into the underlying course and compacting by approved methods. The stabilized material shall be considered as part of the underlying course and shall meet all requirements of the underlying course. The finished underlying course shall not be disturbed by traffic or other operations and shall be maintained by the Contractor in a satisfactory condition until the GCA is placed.

## 3.5 INSTALLATION

### 3.5.1 Mixing the Materials

The coarse and fine aggregates shall be mixed in a stationary plant, or in a traveling plant or bucket loader on an approved paved working area. The Contractor shall make adjustments in mixing procedures or in equipment as directed to obtain true grades, to minimize segregation or degradation, to obtain the required water content, and to insure a satisfactory GCA meeting all requirements of this specification.

### 3.5.2 Placing

The mixed material shall be placed on the prepared subgrade or subbase in layers of uniform thickness with an approved spreader. When a compacted layer 6 inches or less in thickness is required, the material shall be placed in a single layer. When a compacted layer in excess of 6 inches is required, the material shall be placed in layers of equal thickness. No layer shall exceed 6 inches or less than 3 inches when compacted. The layers shall be so placed that when compacted they will be true to the grades or levels required with the least possible surface disturbance. Where the GCA is placed in more than one layer, the previously constructed layers shall be cleaned of loose and foreign matter by sweeping with power sweepers, power brooms, or hand brooms, as directed. Such adjustments in placing procedures or equipment shall be made as may be directed to obtain true grades, to minimize segregation and degradation, to adjust the water content, and to insure an acceptable GCA.

3.5.3 Grade Control

The finished and completed GCA shall conform to the lines, grades, and cross sections shown. Underlying material(s) shall be excavated and prepared at sufficient depth for the required GCA thickness so that the finished GCA with the subsequent surface course will meet the designated grades.

3.5.4 Edges of Base Course

The GCA shall be placed so that the completed section will be a minimum of 1 foot wider, on all sides, than the next layer that will be placed above it. Additionally, approved fill material shall be placed along the outer edges of GCA in sufficient quantities to compact to the thickness of the course being constructed, or to the thickness of each layer in a multiple layer course, allowing in each operation at least a 2 foot width of this material to be rolled and compacted simultaneously with rolling and compacting of each layer of GCA. If this base course material is to be placed adjacent to another pavement section, then the layers for both of these sections shall be placed and compacted along this edge at the same time.

3.5.5 Compaction

Each layer of the GCA shall be compacted as specified with approved compaction equipment. Water content shall be maintained during the compaction procedure to within plus or minus 2 percent of the optimum water content determined from laboratory tests as specified in paragraph SAMPLING AND TESTING. Rolling shall begin at the outside edge of the surface and proceed to the center, overlapping on successive trips at least one-half the width of the roller. Alternate trips of the roller shall be slightly different lengths. Speed of the roller shall be such that displacement of the aggregate does not occur. In all places not accessible to the rollers, the mixture shall be compacted with hand-operated power tampers. Compaction shall continue until each layer has a degree of compaction that is at least 100 percent of laboratory maximum density through the full depth of the layer. The Contractor shall make such adjustments in compacting or finishing procedures as may be directed to obtain true grades, to minimize segregation and degradation, to reduce or increase water content, and to ensure a satisfactory GCA. Any materials that are found to be unsatisfactory shall be removed and replaced with satisfactory material or reworked, as directed, to meet the requirements of this specification.

3.5.6 Thickness

Compacted thickness of the aggregate course shall be as indicated. No individual layer shall exceed 6 inches nor be less than 3 inches in compacted thickness. The total compacted thickness of the GCA course shall be within 1/2 inch of the thickness indicated. Where the measured thickness is more than 1/2 inch deficient, such areas shall be corrected by scarifying, adding new material of proper gradation, reblading, and recompacting as directed. Where the measured thickness is more than 1/2 inch thicker than indicated, the course shall be considered as conforming to the specified thickness requirements. Average job thickness shall be the average of all thickness measurements taken for the job, but shall be within 1/4 inch of the thickness indicated. The total thickness of the GCA course shall be measured at intervals in such a manner as to ensure one

measurement for each 250 square yards of base course. Measurements shall be made in 3 inch diameter test holes penetrating the base course.

3.5.7 Proof Rolling

Proof rolling of the areas indicated shall be in addition to the compaction specified and shall consist of the application of 30 coverages with a heavy pneumatic-tired roller having four or more tires, each loaded to a minimum of 30,000 pounds and inflated to a minimum of 150 psi. In areas designated, proof rolling shall be applied to the top of the underlying material on which GCA is laid and to each layer of GCA. Water content of the underlying material shall be maintained at optimum or at the percentage directed from start of compaction to completion of proof rolling of that layer. Water content of each layer of the GCA shall be maintained at the optimum percentage directed from start of compaction to completion of proof rolling. Any GCA materials or any underlying materials that produce unsatisfactory results by proof rolling shall be removed and replaced with satisfactory materials, recompacted and proof rolled to meet these specifications.

3.5.8 Finishing

The surface of the top layer of GCA shall be finished after final compaction and proof rolling by cutting any overbuild to grade and rolling with a steel-wheeled roller. Thin layers of material shall not be added to the top layer of base course to meet grade. If the elevation of the top layer of GCA is 1/2 inch or more below grade, then the top layer should be scarified to a depth of at least 3 inches and new material shall be blended in and compacted to bring to grade. Adjustments to rolling and finishing procedures shall be made as directed to minimize segregation and degradation, obtain grades, maintain moisture content, and insure an acceptable base course. Should the surface become rough, corrugated, uneven in texture, or traffic marked prior to completion, the unsatisfactory portion shall be scarified, reworked and recompacted or it shall be replaced as directed.

3.5.9 Smoothness

The surface of the top layer shall show no deviations in excess of 3/8 inch when tested with a 10 foot straightedge. Measurements shall be taken in successive positions parallel to the centerline of the area to be paved. Measurements shall also be taken perpendicular to the centerline at 50 foot intervals. Deviations exceeding this amount shall be corrected by removing material and replacing with new material, or by reworking existing material and compacting it to meet these specifications.

3.6 TRAFFIC

Traffic shall not be allowed on the completed GCA course. Heavy equipment shall not be permitted except when necessary to construction, and then the area shall be protected against marring or damage to the completed work.

3.7 MAINTENANCE

The GCA shall be maintained in a satisfactory condition until the full pavement section is completed and accepted. Maintenance shall include immediate repairs to any defects and shall be repeated as often as necessary to keep the area intact. Any GCA that is not paved over prior to the onset of winter, shall be retested to verify that it still complies

with the requirements of this specification. Any area of GCA that is damaged shall be reworked or replaced as necessary to comply with this specification.

## 3.8 DISPOSAL OF UNSATISFACTORY MATERIALS

Any unsuitable materials that must be removed shall be disposed of in off-site areas obtained and paid for by the contractor. No additional payments will be made for materials that must be replaced.

-- End of Section --

SECTION TABLE OF CONTENTS

DIVISION 02 - SITE CONSTRUCTION

SECTION 02741A

HOT-MIX ASPHALT (HMA) FOR ROADS AND AIRFIELDS

09/99

PART 1 GENERAL

1.1 REFERENCES
1.2 DESCRIPTION OF WORK
1.3 SUBMITTALS
1.4 ASPHALT MIXING PLANT
1.5 HAULING EQUIPMENT
1.6 ASPHALT PAVERS
1.6.1 Receiving Hopper
1.6.2 Automatic Grade Controls
1.7 ROLLERS
1.8 WEATHER LIMITATIONS

PART 2 PRODUCTS

2.1 AGGREGATES
2.1.1 Coarse Aggregate
2.1.2 Fine Aggregate
2.1.3 Mineral Filler
2.1.4 Aggregate Gradation
2.2 ASPHALT CEMENT BINDER
2.3 MIX DESIGN
2.3.1 JMF Requirements
2.3.2 Adjustments to Field JMF

PART 3 EXECUTION

3.1 PREPARATION OF ASPHALT BINDER MATERIAL
3.2 PREPARATION OF MINERAL AGGREGATE
3.3 PREPARATION OF HOT-MIX ASPHALT MIXTURE
3.4 PREPARATION OF THE UNDERLYING SURFACE
3.5 TEST SECTION
3.5.1 Table 5
3.6 TESTING LABORATORY
3.7 TRANSPORTING AND PLACING
3.7.1 Transporting
3.7.2 Placing
3.8 COMPACTION OF MIXTURE
3.9 JOINTS
3.9.1 Transverse Joints
3.9.2 Longitudinal Joints
3.10 CONTRACTOR QUALITY CONTROL
3.10.1 General Quality Control Requirements
3.10.2 Quality Control Testing
3.10.2.1 Temperatures
3.10.2.2 Aggregate Moisture

3.10.2.3 Moisture Content of Mixture
3.10.2.4 Laboratory Air Voids, Marshall Stability and Flow
3.10.2.5 In-Place Density
3.10.2.6 Grade and Smoothness
3.10.2.7 Additional Testing
3.10.2.8 QC Monitoring
3.10.3 Sampling
3.10.4 Control Charts
3.11 ACCEPTANCE
3.11.1 Sublot Sampling
3.11.2 Additional Sampling and Testing
3.11.3 Laboratory Air Voids
3.11.4 Mean Absolute Deviation
3.11.5 In-place Density
3.11.5.1 General Density Requirements
3.11.5.2 Mat and Joint Densities
3.11.6 Grade
3.11.7 Surface Smoothness
3.11.7.1 Smoothness Requirements
3.11.7.2 Testing Method

-- End of Section Table of Contents --

SECTION 02741A

HOT-MIX ASPHALT (HMA) FOR ROADS AND AIRFIELDS
**09/99**

PART 1 GENERAL

1.1 REFERENCES

The publications listed below form a part of this specification to the extent referenced. The publications are referred to in the text by basic designation only.

AMERICAN ASSOCIATION OF STATE HIGHWAY AND TRANSPORTATION OFFICIALS (AASHTO)

| | |
|---|---|
| AASHTO MP 1 | (1998) Provisional Specification for Performance Graded Asphalt Binder |
| AASHTO MP 2 | (1998; Interim 1999) Superpave Volumetric Mix Design |

AMERICAN SOCIETY FOR TESTING AND MATERIALS (ASTM)

| | |
|---|---|
| ASTM C 29/C 29M | (1997) Bulk Density ("Unit Weight") and Voids in Aggregates |
| ASTM C 88 | (1999a) Soundness of Aggregates by Use of Sodium Sulfate or Magnesium Sulfate |
| ASTM C 117 | (1995) Materials Finer than 75 micrometer (No. 200) Sieve in Mineral Aggregates by Washing |
| ASTM C 131 | (1996) Resistance to Degradation of Small-Size Coarse Aggregate by Abrasion and Impact in the Los Angeles Machine |
| ASTM C 136 | (1996a) Test Method for Sieve Analysis of Fine and Coarse Aggregates |
| ASTM C 566 | (1997) Test Method for Total Moisture Content of Aggregate by Drying |
| ASTM C 1252 | (1998) Uncompacted Void Content of Fine Aggregate (as Influenced by Particle Shape, Surface Texture, and Grading) |
| ASTM D 140 | (1998) Practice for Sampling Bituminous Materials |

| | |
|---|---|
| ASTM D 242 | (1995) Mineral Filler for Bituminous Paving Mixtures |
| ASTM D 995 | (1995b) Mixing Plants for Hot-Mixed, Hot-Laid Bituminous Paving Mixtures |
| ASTM D 1461 | (1985)) Moisture or Volatile Distillates in Bituminous Paving Mixtures |
| ASTM D 1559 | (1989) Resistance to Plastic Flow of Bituminous Mixtures Using Marshall Apparatus |
| ASTM D 2041 | (1995) Theoretical Maximum Specific Gravity and Density of Bituminous Paving Mixtures |
| ASTM D 2419 | (1995) Sand Equivalent Value of Soils and Fine Aggregate |
| ASTM D 2489 | (1984; R 1994el) Degree of Particle Coating of Bituminous-Aggregate Mixtures |
| ASTM D 2726 | (1996el) Bulk Specific Gravity and Density of Non-Absorptive Compacted Bituminous Mixture |
| ASTM D 2950 | (1997) Density of Bituminous Concrete in Place by Nuclear Method |
| ASTM D 3665 | (1999) Random Sampling of Construction Materials |
| ASTM D 3666 | (1998) Minimum Requirements for Agencies Testing and Inspecting Bituminous Paving Materials |
| ASTM D 4791 | (1999) Flat Particles, Elongated Particles, or Flat and Elongated Particles in Coarse Aggregate |
| ASTM D 4867/D 4867M | (1996) Effect of Moisture on Asphalt Concrete Paving Mixtures |

ASPHALT INSTITUTE (AI)

| | |
|---|---|
| AI MS-02 | (1997) Mix Design Methods for Asphalt Concrete and Other Hot-Mix Types |

U.S. ARMY CORPS OF ENGINEERS (USACE)

| | |
|---|---|
| COE CRD-C 171 | (1995) Test Method for Determining Percentage of Crushed Particles in Aggregate |

## 1.2 DESCRIPTION OF WORK

The work shall consist of pavement courses composed of mineral aggregate and asphalt material heated and mixed in a central mixing plant and placed on a prepared course. HMA designed and constructed in accordance with this section shall conform to the lines, grades, thicknesses, and typical cross sections shown on the drawings. Each course shall be constructed to the depth, section, or elevation required by the drawings and shall be rolled, finished, and approved before the placement of the next course.

## 1.3 SUBMITTALS

Government approval is required for submittals with a "G" designation; submittals not having a "G" designation are for information only. When used, a designation following the "G" designation identifies the office that will review the submittal for the Government. The following shall be submitted in accordance with Section 01330 SUBMITTAL PROCEDURES:

SD-03 Product Data

Mix Design; G-AE.

Proposed JMF.

SD-06 Test Reports

Aggregates; G-AE.
QC Monitoring; G-AE.

Aggregate and QC test results.

SD-07 Certificates

Asphalt Cement Binder; G-AE.

Copies of certified test data.

Testing Laboratory; G-AE.

Contractor Quality Control

Certification of compliance.

## 1.4 ASPHALT MIXING PLANT

Plants used for the preparation of hot-mix asphalt shall conform to the requirements of ASTM D 995 with the following changes:

a. Truck Scales. The asphalt mixture shall be weighed on approved certified scales at the Contractor's expense. Scales shall be inspected and sealed at least annually by an approved calibration laboratory.

b. Inspection of Plant. The Contracting Officer shall have access at all times, to all areas of the plant for checking adequacy of equipment; inspecting operation of the plant; verifying weights, proportions, and material properties; checking the temperatures maintained in the preparation of the mixtures and for taking samples. The Contractor shall provide assistance as requested, for the Government to procure any desired

samples.

c. Storage Bins. Use of storage bins for temporary storage of hot-mix asphalt will be permitted as follows:

(1) The asphalt mixture may be stored in non-insulated storage bins for a period of time not exceeding 3 hours.

(2) The asphalt mixture may be stored in insulated storage bins for a period of time not exceeding 8 hours. The mix drawn from bins shall meet the same requirements as mix loaded directly into trucks.

## 1.5 HAULING EQUIPMENT

Trucks used for hauling hot-mix asphalt shall have tight, clean, and smooth metal beds. To prevent the mixture from adhering to them, the truck beds shall be lightly coated with a minimum amount of paraffin oil, lime solution, or other approved material. Petroleum based products shall not be used as a release agent. Each truck shall have a suitable cover to protect the mixture from adverse weather. When necessary to ensure that the mixture will be delivered to the site at the specified temperature, truck beds shall be insulated or heated and covers (tarps) shall be securely fastened.

## 1.6 ASPHALT PAVERS

Asphalt pavers shall be self-propelled, with an activated screed, heated as necessary, and shall be capable of spreading and finishing courses of hot-mix asphalt which will meet the specified thickness, smoothness, and grade. The paver shall have sufficient power to propel itself and the hauling equipment without adversely affecting the finished surface.

### 1.6.1 Receiving Hopper

The paver shall have a receiving hopper of sufficient capacity to permit a uniform spreading operation. The hopper shall be equipped with a distribution system to place the mixture uniformly in front of the screed without segregation. The screed shall effectively produce a finished surface of the required evenness and texture without tearing, shoving, or gouging the mixture.

### 1.6.2 Automatic Grade Controls

If an automatic grade control device is used, the paver shall be equipped with a control system capable of automatically maintaining the specified screed elevation. The control system shall be automatically actuated from either a reference line and/or through a system of mechanical sensors or sensor-directed mechanisms or devices which will maintain the paver screed at a predetermined transverse slope and at the proper elevation to obtain the required surface. The transverse slope controller shall be capable of maintaining the screed at the desired slope within plus or minus 0.1 percent. A transverse slope controller shall not be used to control grade. The controls shall be capable of working in conjunction with any of the following attachments:

a. Ski-type device of not less than 30 feet in length.

b. Taut stringline set to grade.

c. Short ski or shoe for joint matching.

d. Laser control.

1.7 ROLLERS

Rollers shall be in good condition and shall be operated at slow speeds to avoid displacement of the asphalt mixture. The number, type, and weight of rollers shall be sufficient to compact the mixture to the required density while it is still in a workable condition. Equipment which causes excessive crushing of the aggregate shall not be used.

1.8 WEATHER LIMITATIONS

The hot-mix asphalt shall not be placed upon a wet surface or when the surface temperature of the underlying course is less than specified in Table 1. The temperature requirements may be waived by the Contracting Officer, if requested; however, all other requirements, including compaction, shall be met.

Table 1. Surface Temperature Limitations of Underlying Course

| Mat Thickness, inches | Degrees F |
|---|---|
| 3 or greater | 40 |
| Less than 3 | 45 |

PART 2 PRODUCTS

2.1 AGGREGATES

Aggregates shall consist of crushed stone, crushed gravel, crushed slag, screenings, natural sand and mineral filler, as required. The portion of material retained on the No. 4 sieve is coarse aggregate. The portion of material passing the No. 4 sieve and retained on the No. 200 sieve is fine aggregate. The portion passing the No. 200 sieve is defined as mineral filler. All aggregate test results and samples shall be submitted to the Contracting Officer at least 14 days prior to start of construction.

2.1.1 Coarse Aggregate

Coarse aggregate shall consist of sound, tough, durable particles, free from films of material that would prevent thorough coating and bonding with the asphalt material and free from organic matter and other deleterious substances. All individual coarse aggregate sources shall meet the following requirements:

a. The percentage of loss shall not be greater than 40 percent after 500 revolutions when tested in accordance with ASTM C 131.

b. The percentage of loss shall not be greater than 18 percent after five cycles when tested in accordance with ASTM C 88 using magnesium sulfate or 12 percent when using sodium sulfate.

c. At least 75 percent by weight of coarse aggregate shall have at least two or more fractured faces when tested in accordance with COE CRD-C 171. Fractured faces shall be produced by crushing.

d. The particle shape shall be essentially cubical and the aggregate shall not contain more than 20% percent, by weight, of flat and elongated particles (3:1 ratio of maximum to minimum) when tested in accordance with ASTM D 4791.

e. Slag shall be air-cooled, blast furnace slag, and shall have a compacted weight of not less than 75 lb/cu ft when tested in accordance with ASTM C 29/C 29M.

2.1.2 Fine Aggregate

Fine aggregate shall consist of clean, sound, tough, durable particles. The aggregate particles shall be free from coatings of clay, silt, or any objectionable material and shall contain no clay balls. All individual fine aggregate sources shall have a sand equivalent value not less than 45 when tested in accordance with ASTM D 2419. The quantity of natural sand (noncrushed material) added to the aggregate blend shall not exceed 15 percent by weight of total aggregate.

The fine aggregate portion of the blended aggregate shall have an uncompacted void content not less than 45.0 percent when tested in accordance with ASTM C 1252 Method A.

2.1.3 Mineral Filler

Mineral filler shall be nonplastic material meeting the requirements of ASTM D 242.

2.1.4 Aggregate Gradation

The combined aggregate gradation shall conform to gradations specified in Table 2, when tested in accordance with ASTM C 136 and ASTM C 117, and shall not vary from the low limit on one sieve to the high limit on the adjacent sieve or vice versa, but graded uniformly from coarse to fine.

Table 2. Aggregate Gradations

| Sieve Size, inch | Gradation 2 Percent Passing by Mass | Gradation 3 Percent Passing by Mass |
|---|---|---|
| 1 | --- | --- |
| 3/4 | 100 | --- |
| 1/2 | 76-96 | 100 |
| 3/8 | 69-89 | 76-96 |
| No. 4 | 53-73 | 58-78 |
| No. 8 | 38-60 | 40-60 |
| No. 16 | 26-48 | 28-48 |
| No. 30 | 18-38 | 18-38 |
| No. 50 | 11-27 | 11-27 |
| No. 100 | 6-18 | 6-18 |
| No. 200 | 3-6 | 3-6 |

2.2 ASPHALT CEMENT BINDER

Asphalt cement binder shall conform to AASHTO MP 1 Performance Grade (PG) 58-10. Test data indicating grade certification shall be provided by the supplier at the time of delivery of each load to the mix plant. Copies of

these certifications shall be submitted to the Contracting Officer. The supplier is defined as the last source of any modification to the binder. The Contracting Officer may sample and test the binder at the mix plant at any time before or during mix production. Samples for this verification testing shall be obtained by the Contractor in accordance with ASTM D 140 and in the presence of the Contracting Officer. These samples shall be furnished to the Contracting Officer for the verification testing, which shall be at no cost to the Contractor. Samples of the asphalt cement specified shall be submitted for approval not less than 14 days before start of the test section.

## 2.3 MIX DESIGN

The Contractor shall develop the mix design. The asphalt mix shall be composed of a mixture of well-graded aggregate, mineral filler if required, and asphalt material. The aggregate fractions shall be sized, handled in separate size groups, and combined in such proportions that the resulting mixture meets the grading requirements of the job mix formula (JMF). No hot-mix asphalt for payment shall be produced until a JMF has been approved. The hot-mix asphalt shall be designed using procedures contained in AI MS-02 and the criteria shown in Table 3. If the Tensile Strength Ratio (TSR) of the composite mixture, as determined by ASTM D 4867/D 4867M is less than 75, the aggregates shall be rejected or the asphalt mixture treated with an approved anti-stripping agent. The amount of anti-stripping agent added shall be sufficient to produce a TSR of not less than 75. If an antistrip agent is required, it shall be provided by the Contractor at no additional cost.

At the option of the contractor a currently used Virginia DOT superpave hot mix may be used in lieu of developing a new hot mix design study as described herein for landside road and parking lot paving. Superpave design mixes are not acceptable for airside ramp and taxiway pavement. Airside ramp and taxiway pavement mixes must be designed as stated above and below in accordance with AI MS-02. The superpave volumetric mix shall be designed in accordance with AASHTO MP 2.

### 2.3.1 JMF Requirements

The job mix formula shall be submitted in writing by the Contractor for approval at least 14 days prior to the start of the test section and shall include as a minimum:

a. Percent passing each sieve size.

b. Percent of asphalt cement.

c. Percent of each aggregate and mineral filler to be used.

d. Asphalt viscosity grade, penetration grade, or performance grade.

e. Number of blows of hammer per side of molded specimen.

f. Laboratory mixing temperature.

g. Lab compaction temperature.

h. Temperature-viscosity relationship of the asphalt cement.

i. Plot of the combined gradation on the 0.45 power gradation chart,

stating the nominal maximum size.

j. Graphical plots of stability, flow, air voids, voids in the mineral aggregate, and unit weight versus asphalt content as shown in AI MS-02.

k. Specific gravity and absorption of each aggregate.

l. Percent natural sand.

m. Percent particles with 2 or more fractured faces (in coarse aggregate).

n. Fine aggregate angularity.

o. Percent flat or elongated particles (in coarse aggregate).

p. Tensile Strength Ratio(TSR).

q. Antistrip agent (if required) and amount.

r. List of all modifiers and amount.

Table 3. Marshall Design Criteria

| Test Property | 75 Blow Mix | 50 Blow Mix |
|---|---|---|
| Stability, pounds minimum | *2150 | *1350 |
| Flow, 0.01 inch | 8-16 | 8-18 |
| Air voids, percent | 3-5 | 3-5 |
| Percent Voids in mineral aggregate VMA, (minimum) | | |
| Gradation 1 | 13.0 | 13.0 |
| Gradation 2 | 14.0 | 14.0 |
| Gradation 3 | 15.0 | 15.0 |
| TSR, minimum percent | 75 | 75 |

* This is a minimum requirement. The average during construction shall be significantly higher than this number to ensure compliance with the specifications. A 75 Blow mix shall be used for all airside asphalt taxiway or ramp pavement. A 50 or 75 blow mix may be used for landside road and parking lot pavement at the contractor's discretion.

** Calculate VMA in accordance with AI MS-02, based on ASTM D 2726 bulk specific gravity for the aggregate.

2.3.2 Adjustments to Field JMF

The Laboratory JMF for each mixture shall be in effect until a new formula

is approved in writing by the Contracting Officer. Should a change in sources of any materials be made, a new laboratory jmf design shall be performed and a new JMF approved before the new material is used. The Contractor will be allowed to adjust the Laboratory JMF within the limits specified below to optimize mix volumetric properties with the approval of the Contracting Officer. Adjustments to the Laboratory JMF shall be applied to the field (plant) established JMF and limited to those values as shown. Adjustments shall be targeted to produce or nearly produce 4 percent voids total mix (VTM).

TABLE 4. Field (Plant) Established JMF Tolerances

| Sieves | Adjustments (plus or minus), percent |
|---|---|
| No. 4 | 3 |
| No. 8 | 3 |
| No. 200 | 1 |
| Binder Content | 0.40 |

If adjustments are needed that exceed these limits, a new mix design shall be developed. Tolerances given above may permit the aggregate grading to be outside the limits shown in Table 2; while not desirable, this is acceptable.

## PART 3 EXECUTION

### 3.1 PREPARATION OF ASPHALT BINDER MATERIAL

The asphalt cement material shall be heated avoiding local overheating and providing a continuous supply of the asphalt material to the mixer at a uniform temperature. The temperature of unmodified asphalts shall be no more than 325 degrees F when added to the aggregates. Modified asphalts shall be no more than 350 degrees F when added to the aggregates.

### 3.2 PREPARATION OF MINERAL AGGREGATE

The aggregate for the mixture shall be heated and dried prior to mixing. No damage shall occur to the aggregates due to the maximum temperature and rate of heating used. The temperature of the aggregate and mineral filler shall not exceed 350 degrees F when the asphalt cement is added. The temperature shall not be lower than is required to obtain complete coating and uniform distribution on the aggregate particles and to provide a mixture of satisfactory workability.

### 3.3 PREPARATION OF HOT-MIX ASPHALT MIXTURE

The aggregates and the asphalt cement shall be weighed or metered and introduced into the mixer in the amount specified by the JMF. The combined materials shall be mixed until the aggregate obtains a uniform coating of asphalt binder and is thoroughly distributed throughout the mixture. Wet mixing time shall be the shortest time that will produce a satisfactory mixture, but no less than 25 seconds for batch plants. The wet mixing time for all plants shall be established by the Contractor, based on the procedure for determining the percentage of coated particles described in ASTM D 2489, for each individual plant and for each type of aggregate used. The wet mixing time will be set to at least achieve 95 percent of coated particles. The moisture content of all hot-mix asphalt upon discharge from the plant shall not exceed 0.5 percent by total weight of mixture as measured by ASTM D 1461.

## 3.4 PREPARATION OF THE UNDERLYING SURFACE

Immediately before placing the hot mix asphalt, the underlying course shall be cleaned of dust and debris. A prime coat and tack coat shall be applied in accordance with the contract specifications.

3.5 TEST SECTION

3.5.1 Table 5

## 3.6 TESTING LABORATORY

The laboratory used to develop the JMF shall meet the requirements of ASTM D 3666. A certification signed by the manager of the laboratory stating that it meets these requirements or clearly listing all deficiencies shall be submitted to the Contracting Officer prior to the start of construction. The certification shall contain as a minimum:

a. Qualifications of personnel; laboratory manager, supervising technician, and testing technicians.

b. A listing of equipment to be used in developing the job mix.

c. A copy of the laboratory's quality control system.

d. Evidence of participation in the AASHTO Materials Reference Laboratory (AMRL) program.

## 3.7 TRANSPORTING AND PLACING

### 3.7.1 Transporting

The hot-mix asphalt shall be transported from the mixing plant to the site in clean, tight vehicles. Deliveries shall be scheduled so that placing and compacting of mixture is uniform with minimum stopping and starting of the paver. Adequate artificial lighting shall be provided for night placements. Hauling over freshly placed material will not be permitted until the material has been compacted as specified, and allowed to cool to 140 degrees F. To deliver mix to the paver, the Contractor shall use a material transfer vehicle which shall be operated to produce continuous forward motion of the paver.

### 3.7.2 Placing

The mix shall be placed and compacted at a temperature suitable for obtaining density, surface smoothness, and other specified requirements. Upon arrival, the mixture shall be placed to the full width by an asphalt paver; it shall be struck off in a uniform layer of such depth that, when the work is completed, it shall have the required thickness and conform to the grade and contour indicated. The speed of the paver shall be regulated to eliminate pulling and tearing of the asphalt mat. Unless otherwise permitted, placement of the mixture shall begin along the centerline of a crowned section or on the high side of areas with a one-way slope. The mixture shall be placed in consecutive adjacent strips having a minimum width of 10 feet. The longitudinal joint in one course shall offset the longitudinal joint in the course immediately below by at least 1 foot; however, the joint in the surface course shall be at the centerline of the pavement. Transverse joints in one course shall be offset by at least 10 feet from transverse joints in the previous course. Transverse joints in adjacent lanes shall be offset a minimum of 10 feet. On isolated areas where irregularities or unavoidable obstacles make the use of mechanical spreading and finishing equipment impractical, the mixture may be spread and luted by hand tools.

## 3.8 COMPACTION OF MIXTURE

After placing, the mixture shall be thoroughly and uniformly compacted by

rolling. The surface shall be compacted as soon as possible without causing displacement, cracking or shoving. The sequence of rolling operations and the type of rollers used shall be at the discretion of the Contractor. The speed of the roller shall, at all times, be sufficiently slow to avoid displacement of the hot mixture and be effective in compaction. Any displacement occurring as a result of reversing the direction of the roller, or from any other cause, shall be corrected at once. Sufficient rollers shall be furnished to handle the output of the plant. Rolling shall continue until the surface is of uniform texture, true to grade and cross section, and the required field density is obtained. To prevent adhesion of the mixture to the roller, the wheels shall be kept properly moistened but excessive water will not be permitted. In areas not accessible to the roller, the mixture shall be thoroughly compacted with hand tampers. Any mixture that becomes loose and broken, mixed with dirt, contains check-cracking, or is in any way defective shall be removed full depth, replaced with fresh hot mixture and immediately compacted to conform to the surrounding area. This work shall be done at the Contractor's expense. Skin patching will not be allowed.

## 3.9 JOINTS

The formation of joints shall be made ensuring a continuous bond between the courses and to obtain the required density. All joints shall have the same texture as other sections of the course and meet the requirements for smoothness and grade.

### 3.9.1 Transverse Joints

The roller shall not pass over the unprotected end of the freshly laid mixture, except when necessary to form a transverse joint. When necessary to form a transverse joint, it shall be made by means of placing a bulkhead or by tapering the course. The tapered edge shall be cut back to its full depth and width on a straight line to expose a vertical face prior to placing material at the joint . The cutback material shall be removed from the project. In both methods, all contact surfaces shall be given a light tack coat of asphalt material before placing any fresh mixture against the joint.

### 3.9.2 Longitudinal Joints

Longitudinal joints which are irregular, damaged, uncompacted, cold (less than 175 degrees F at the time of placing adjacent lanes), or otherwise defective, shall be cut back a minimum of 2 inches from the edge with a cutting wheel to expose a clean, sound vertical surface for the full depth of the course. All cutback material shall be removed from the project. All contact surfaces shall be given a light tack coat of asphalt material prior to placing any fresh mixture against the joint. The Contractor will be allowed to use an alternate method if it can be demonstrated that density, smoothness, and texture can be met.

## 3.10 CONTRACTOR QUALITY CONTROL

### 3.10.1 General Quality Control Requirements

The Contractor shall develop an approved Quality Control Plan. Hot-mix asphalt for payment shall not be produced until the quality control plan has been approved. The plan shall address all elements which affect the quality of the pavement including, but not limited to:

a. Mix Design

b. Aggregate Grading

c. Quality of Materials

d. Stockpile Management

e. Proportioning

f. Mixing and Transportation

g. Mixture Volumetrics

h. Moisture Content of Mixtures

i. Placing and Finishing

j. Joints

k. Compaction

l.Surface Smoothness

3.10.2 Quality Control Testing

The Contractor shall perform all quality control tests applicable to these specifications and as set forth in the Quality Control Program. The testing program shall include, but shall not be limited to, tests for the control of asphalt content, aggregate gradation, temperatures, aggregate moisture, moisture in the asphalt mixture, laboratory air voids, stability, flow, in-place density, grade and smoothness. A Quality Control Testing Plan shall be developed as part of the Quality Control Program.

3.10.2.1 Temperatures

Temperatures shall be checked once per day at necessary locations, to determine the temperature at the dryer, the asphalt cement in the storage tank, the asphalt mixture at the plant, and the asphalt mixture at the job site.

3.10.2.2 Aggregate Moisture

The moisture content of aggregate used for production shall be determined a minimum of once in accordance with ASTM C 566.

3.10.2.3 Moisture Content of Mixture

The moisture content of the mixture shall be determined at least once per day in accordance with ASTM D 1461 or an approved alternate procedure.

3.10.2.4 Laboratory Air Voids, Marshall Stability and Flow

Mixture samples shall be taken at least once per day and compacted into specimens, using 50 blow counts for landside pavement and 75 blows for airside ramp and taxiway pavement per side with the Marshall hammer as described in ASTM D 1559. After compaction, the laboratory air voids of each specimen shall be determined, as well as the Marshall stability and flow.

3.10.2.5 In-Place Density

The Contractor shall conduct any necessary testing to ensure the specified density is achieved. A nuclear gauge may be used to monitor pavement density in accordance with ASTM D 2950.

3.10.2.6 Grade and Smoothness

The Contractor shall conduct the necessary checks to ensure the grade and smoothness requirements are met.

3.10.2.7 Additional Testing

Any additional testing, which the Contractor deems necessary to control the process, may be performed at the Contractor's option.

3.10.2.8 QC Monitoring

The Contractor shall submit all QC test results to the Contracting Officer on a daily basis as the tests are performed. The Contracting Officer reserves the right to monitor any of the Contractor's quality control testing and to perform duplicate testing as a check to the Contractor's quality control testing.

3.10.3 Sampling

When directed by the Contracting Officer, the Contractor shall sample and test any material which appears inconsistent with similar material being produced, unless such material is voluntarily removed and replaced or deficiencies corrected by the Contractor. All sampling shall be in accordance with standard procedures specified.

3.10.4 Control Charts

For process control, the Contractor shall establish and maintain linear control charts on both individual samples and the running average of last four samples for the parameters listed in Table 6, as a minimum. These control charts shall be posted as directed by the Contracting Officer and shall be kept current at all times. The control charts shall identify the project number, the test parameter being plotted, the individual sample numbers, the Action and Suspension Limits listed in Table 6 applicable to the test parameter being plotted, and the Contractor's test results. Target values from the JMF shall also be shown on the control charts as indicators of central tendency for the cumulative percent passing, asphalt content, and laboratory air voids parameters. When the test results exceed either applicable Action Limit, the Contractor shall take immediate steps to bring the process back in control. When the test results exceed either applicable Suspension Limit, the Contractor shall halt production until the problem is solved. The Contractor shall use the control charts as part of the process control system for identifying trends so that potential problems can be corrected before they occur. Decisions concerning mix modifications shall be made based on analysis of the results provided in the control charts. The Quality Control Plan shall indicate the appropriate action which shall be taken to bring the process into control when certain parameters exceed their Action Limits.

Table 6. Action and Suspension Limits for the Parameters to be Plotted on Individual and Running Average Control Charts

| Parameter to be Plotted | Running Average of Individual Samples | | Last Four Samples | |
|---|---|---|---|---|
| | Action Limit | Suspension Limit | Action Limit | Suspension Limit |
| No. 4 sieve, Cumulative % Passing, deviation from JMF target; plus or minus values | 6 | 8 | 4 | 5 |
| No. 30 sieve, Cumulative % Passing, deviation from JMF target; plus or minus values | 4 | 6 | 3 | 4 |
| No. 200 sieve, Cumulative % Passing, deviation from JMF target; plus or minus values | 1.4 | 2.0 | 1.1 | 1.5 |
| Stability, pounds (minimum) | | | | |
| 75 Blow JMF | 1800 | 1700 | 1900 | 1800 |
| 50 Blow JMF | 1000 | 900 | 1100 | 1000 |
| Flow, 0.01 inches | | | | |
| 75 Blow | 8 min.<br>16 max. | 7 min.<br>17 max. | 9 min.<br>15 max. | 8 min.<br>16 max. |
| 50 Blow | 8 min.<br>18 max. | 7 min.<br>19 max. | 9 min.<br>17 max. | 8 min.<br>18 max. |
| Asphalt content, % deviation from JMF target; plus or minus value | 0.4 | 0.5 | 0.2 | 0.3 |
| Laboratory Air Voids, % deviation from JMF target value | No specific action and suspension limits set since this parameter is used to determine percent payment | | | |
| In-place Mat Density, % of Marshall density | No specific action and suspension limits set since this parameter is used to determine percent payment | | | |
| In-place Joint Density, % of Marshall density | No specific action and suspension limits set since this parameter is used to determine percent payment | | | |

## 3.11 ACCEPTANCE

Testing for acceptability of work will be performed by an independent laboratory hired by the Contractor. 3.11.1 Sublot Sampling

One random mixture sample for determining laboratory air voids, theoretical maximum density, and for any additional testing the Contracting Officer desires, will be taken from a loaded truck delivering mixture to each sublot, or other appropriate location for each sublot. All samples will be selected randomly, using commonly recognized methods of assuring randomness conforming to ASTM D 3665 and employing tables of random numbers or

computer programs. Laboratory air voids will be determined from three laboratory compacted specimens of each sublot sample in accordance with ASTM D 1559. The specimens will be compacted within 2 hours of the time the mixture was loaded into trucks at the asphalt plant. Samples will not be reheated prior to compaction and insulated containers will be used as necessary to maintain the temperature.

3.11.2 Additional Sampling and Testing

The Contracting Officer reserves the right to direct additional samples and tests for any area which appears to deviate from the specification requirements. The cost of any additional testing will be paid for by the Government. Testing in these areas will be in addition to the lot testing, and the requirements for these areas will be the same as those for a lot.

3.11.3 Laboratory Air Voids

Laboratory air voids will be calculated by determining the Marshall density of each lab compacted specimen using ASTM D 2726 and determining the theoretical maximum density of every other sublot sample using ASTM D 2041. Laboratory air void calculations for each sublot will use the latest theoretical maximum density values obtained, either for that sublot or the previous sublot. The mean absolute deviation of the four laboratory air void contents (one from each sublot) from the JMF air void content will be evaluated and a pay factor determined from Table 7. All laboratory air void tests will be completed and reported within 24 hours after completion of construction of each lot.

3.11.4 Mean Absolute Deviation

An example of the computation of mean absolute deviation for laboratory air voids is as follows: Assume that the laboratory air voids are determined from 4 random samples of a lot (where 3 specimens were compacted from each sample). The average laboratory air voids for each sublot sample are determined to be 3.5, 3.0, 4.0, and 3.7. Assume that the target air voids from the JMF is 4.0. The mean absolute deviation is then:

Mean Absolute Deviation = (|3.5 - 4.0| + |3.0 - 4.0| + |4.0 - 4.0| + |3.7 - 4.0|/4

= (0.5 + 1.0 + 0.0 + 0.3)/4 = (1.8)/4 = 0.45

The mean absolute deviation for laboratory air voids is determined to be 0.45. It can be seen from Table 7 that the lot's pay factor based on laboratory air voids, is 100 percent.

Table 7. Pay Factor Based on Laboratory Air Voids

| Mean Absolute Deviation of Lab Air Voids from JMF | Pay Factor, % |
|---|---|
| 0.60 or less | 100 |
| 0.61 or above | reject (0) |

3.11.5 In-place Density

3.11.5.1 General Density Requirements

For determining in-place density, one random core will be taken by the Government from the mat (interior of the lane) of each sublot, and one random core will be taken from the joint (immediately over joint) of each

sublot. Each random core will be full thickness of the layer being placed. When the random core is less than 1 inch thick, it will not be included in the analysis. In this case, another random core will be taken. After air drying to a constant weight, cores obtained from the mat and from the joints will be used for in-place density determination.

3.11.5.2 Mat and Joint Densities

The average in-place mat and joint densities are expressed as a percentage of the average Marshall density for the lot. The Marshall density for each lot will be determined as the average Marshall density of the four random samples (3 specimens compacted per sample). The average in-place mat density and joint density for a lot are determined and compared with Table 8 to calculate a single pay factor per lot based on in-place density, as described below. First, a pay factor for both mat density and joint density are determined from Table 8. The area associated with the joint is then determined and will be considered to be 10 feet wide times the length of completed longitudinal construction joint in the lot. This area will not exceed the total lot size. The length of joint to be considered will be that length where a new lane has been placed against an adjacent lane of hot-mix asphalt pavement, either an adjacent freshly paved lane or one paved at any time previously. The area associated with the joint is expressed as a percentage of the total lot area. A weighted pay factor for the joint is determined based on this percentage (see example below). The pay factor for mat density and the weighted pay factor for joint density is compared and the lowest selected. This selected pay factor is the pay factor based on density for the lot. When the Marshall density on both sides of a longitudinal joint is different, the average of these two densities will be used as the Marshall density needed to calculate the percent joint density. All density results for a lot will be completed and reported within 24 hours after the construction of that lot.3.11.6 Grade

The final wearing surface of pavement shall conform to the elevations and cross sections shown and shall vary not more than 0.05 foot from the plan grade established and approved at site of work. Finished surfaces at juncture with other pavements shall coincide with finished surfaces of abutting pavements. Deviation from the plan elevation will not be permitted in areas of pavements where closer conformance with planned elevation is required for the proper functioning of drainage and other appurtenant structures involved.In areas where the grade exceeds the tolerance by more than 50 percent, the Contractor shall remove the surface lift full depth; the Contractor shall then replace the lift with hot-mix asphalt to meet specification requirements, at no additional cost to the Government. Diamond grinding may be used to remove high spots to meet grade requirements. Skin patching for correcting low areas or planing or milling for correcting high areas will not be permitted.

3.11.7 Surface Smoothness

The Contractor shall use the following to test and evaluate surface smoothness of the pavement. All testing shall be performed in the presence of the Contracting Officer. Detailed notes of the results of the testing shall be kept and a copy furnished to the Government immediately after each day's testing. Where drawings show required deviations from a plane surface (crowns, drainage inlets, etc.), the surface shall be finished to meet the approval of the Contracting Officer.

3.11.7.1 Smoothness Requirements

a. Straightedge Testing: The finished surfaces of the pavements shall have no abrupt change of 1/4 inch or more, and all pavements shall be within the tolerances specified in Table 9 when checked with an approved 12 foot straightedge.

Table 9. Straightedge Surface Smoothness--Pavements

| Pavement Category | Direction of Testing | Tolerance, inches |
|---|---|---|
| All paved areas | Longitudinal | 1/4 |
| | Transverse | 1/4 |

3.11.7.2 Testing Method

After placement, the surface of the pavement in each entire lot shall be tested by the Contractor in such a manner as to reveal all surface irregularities exceeding the tolerances specified above. If any pavement areas are ground, these areas shall be retested immediately after grinding. The entire area of the pavement shall be tested in both a longitudinal and a transverse direction on parallel lines. The transverse lines shall be 25 feet or less apart, as directed. The longitudinal lines shall be at the centerline of each paving lane for lines less than 20 feet and at the third points for lanes 20 feet or greater. Other areas having obvious deviations shall also be tested. Longitudinal testing lines shall be continuous across all joints.

a. Straightedge Testing. The straightedge shall be held in contact with the surface and moved ahead one-half the length of the straightedge for each successive measurement. The amount of surface irregularity shall be determined by placing the freestanding (unleveled) straightedge on the pavement surface and allowing it to rest upon the two highest spots covered by its length, and measuring the maximum gap between the straightedge and the pavement surface in the area between these two high points.

-- End of Section --

SECTION TABLE OF CONTENTS

DIVISION 02 - SITE CONSTRUCTION

SECTION 02748A

BITUMINOUS TACK AND PRIME COATS

**01/98**

PART 1 GENERAL

1.1 REFERENCES
1.2 SUBMITTALS
1.3 PLANT, EQUIPMENT, MACHINES AND TOOLS
1.3.1 General Requirements
1.3.2 Bituminous Distributor
1.3.3 Power Brooms and Power blowers
1.4 WEATHER LIMITATIONS

PART 2 PRODUCTS

2.1 TACK COAT
2.2 PRIME COAT

PART 3 EXECUTION

3.1 PREPARATION OF SURFACE
3.2 APPLICATION RATE
3.2.1 Tack Coat
3.2.2 Prime Coat
3.3 APPLICATION TEMPERATURE
3.3.1 Viscosity Relationship
3.3.2 Temperature Ranges
3.4 APPLICATION
3.4.1 General
3.4.2 Prime Coat
3.4.3 Tack Coat
3.5 CURING PERIOD
3.6 FIELD QUALITY CONTROL
3.7 SAMPLING AND TESTING
3.7.1 Sampling
3.7.2 Calibration Test
3.7.3 Trial Applications
3.7.3.1 Tack Coat Trial Application Rate
3.7.3.2 Prime Coat Trial Application Rate
3.7.4 Sampling and Testing During Construction

-- End of Section Table of Contents --

SECTION 02748A

BITUMINOUS TACK AND PRIME COATS
**01/98**

PART 1 GENERAL

1.1 REFERENCES

The publications listed below form a part of this specification to the extent referenced. The publications are referred to within the text by the basic designation only.

AMERICAN ASSOCIATION OF STATE HIGHWAY AND TRANSPORTATION OFFICIALS (AASHTO)

| | |
|---|---|
| AASHTO T 40 | (2002) Sampling Bituminous Materials |

ASTM INTERNATIONAL (ASTM)

| | |
|---|---|
| ASTM D 140 | (2001) Sampling Bituminous Materials |
| ASTM D 2028 | (1997) Cutback Asphalt (Rapid-Curing Type) |
| ASTM D 2397 | (2002) Cationic Emulsified Asphalt |
| ASTM D 2995 | (1999) Determining Application Rate of Bituminous Distributors |
| ASTM D 977 | (2003) Emulsified Asphalt |

1.2 SUBMITTALS

Government approval is required for submittals with a "G" designation; submittals not having a "G" designation are for information only. When used, a designation following the "G" designation identifies the office that will review the submittal for the Government. The following shall be submitted in accordance with Section 01330 SUBMITTAL PROCEDURES:

SD-03 Product Data; G-AE.

Waybills and Delivery Tickets

Waybills and delivery tickets, during progress of the work.

SD-06 Test Reports

Sampling and Testing

Copies of all test results for bituminous materials, within 24 hours of completion of tests. Certified copies of the manufacturer's test reports indicating compliance with applicable specified requirements, not less than 30 days before the material is required in the work.

## 1.3 PLANT, EQUIPMENT, MACHINES AND TOOLS

### 1.3.1 General Requirements

Plant, equipment, machines and tools used in the work shall be subject to approval and shall be maintained in a satisfactory working condition at all times.

### 1.3.2 Bituminous Distributor

The distributor shall have pneumatic tires of such size and number to prevent rutting, shoving or otherwise damaging the base surface or other layers in the pavement structure. The distributor shall be designed and equipped to spray the bituminous material in a uniform coverage at the specified temperature, at readily determined and controlled rates with an allowable variation from the specified rate of not more than plus or minus 5 percent, and at variable widths. Distributor equipment shall include a separate power unit for the bitumen pump, full-circulation spray bars, tachometer, pressure gauges, volume-measuring devices, adequate heaters for heating of materials to the proper application temperature, a thermometer for reading the temperature of tank contents, and a hand hose attachment suitable for applying bituminous material manually to areas inaccessible to the distributor. The distributor shall be equipped to circulate and agitate the bituminous material during the heating process.

### 1.3.3 Power Brooms and Power blowers

Power brooms and power blowers shall be suitable for cleaning the surfaces to which the bituminous coat is to be applied.

## 1.4 WEATHER LIMITATIONS

Bituminous coat shall be applied only when the surface to receive the bituminous coat is dry. Bituminous coat shall be applied only when the atmospheric temperature in the shade is 50 degrees F or above and when the temperature has not been below 35 degrees F for the 12 hours prior to application.

# PART 2 PRODUCTS

## 2.1 TACK COAT

Cutback asphalt shall conform to ASTM D 2028 RC-70 or RC-250.

## 2.2 PRIME COAT

Emulsified asphalt shall conform to ASTM D 977 or ASTM D 2397, Grade SS-1, SS-1h, CSS-1 or CSS-1h.

# PART 3 EXECUTION

## 3.1 PREPARATION OF SURFACE

Immediately before applying the bituminous coat, all loose material, dirt, clay, or other objectionable material shall be removed from the surface to be treated. The surface shall be dry and clean at the time of treatment.

## 3.2 APPLICATION RATE

The exact quantities within the range specified, which may be varied to suit field conditions, will be determined by the Contracting Officer.

### 3.2.1 Tack Coat

Bituminous material for the tack coat shall be applied in quantities of not less than 0.05 gallon nor more than 0.15 gallon per square yard of pavement surface.

### 3.2.2 Prime Coat

Bituminous material for the prime coat shall be applied in quantities of not less than 0.15 gallon nor more than 0.40 gallon per square yard of pavement surface.

## 3.3 APPLICATION TEMPERATURE

### 3.3.1 Viscosity Relationship

Asphalt application temperature shall provide an application viscosity between 10 and 60 seconds, Saybolt Furol, or between 20 and 120 centistokes, kinematic. The temperature viscosity relation shall be furnished to the Contracting Officer.

### 3.3.2 Temperature Ranges

The viscosity requirements shall determine the application temperature to be used. The following is a normal range of application temperatures:

Liquid Asphalts

| | |
|---|---|
| RC-70 | 120-200 degrees F* |
| RC-250 | 165-250 degrees F* |

Paving Grade Asphalts

Emulsions

| | |
|---|---|
| SS-1 | 70-160 degrees F |
| SS-1h | 70-160 degrees F |
| CSS-1 | 70-160 degrees F |
| CSS-1h | 70-160 degrees F |

*These temperature ranges exceed the flash point of the material and care should be taken in their heating.

## 3.4 APPLICATION

### 3.4.1 General

Following preparation and subsequent inspection of the surface, the bituminous coat shall be applied at the specified rate with uniform distribution over the surface to be treated. All areas and spots missed by the distributor shall be properly treated with the hand spray. Until the succeeding layer of pavement is placed, the surface shall be maintained by

protecting the surface against damage and by repairing deficient areas at no additional cost to the Government. If required, clean dry sand shall be spread to effectively blot up any excess bituminous material. No smoking, fires, or flames other than those from the heaters that are a part of the equipment shall be permitted within 25 feet of heating, distributing, and transferring operations of bituminous material other than bituminous emulsions. All traffic, except for paving equipment used in constructing the surfacing, shall be prevented from using the underlying material, whether primed or not, until the surfacing is completed. The bituminous coat shall conform to all requirements as described herein.

### 3.4.2 Prime Coat

The prime coat will be required if it will be at least seven days before a the surfacing (Asphalt cement hot mix concrete)layer is constructed on the underlying (base course, etc)compacted material. The type of liquid asphalt and application rate will be as specified herein. The Contractor shall protect the underlying from any damage (water, traffic, etc.) until the surfacing is placed. If the Contractor places the surfacing within seven days, the choice of protection measures or actions to be taken is at the Contractor's option. Damage to the underlying material caused by lack of, or inadequate, protection shall be repaired (recompacted or replaced) by approved methods at no additional cost to the Government. If the Contractor options to use the prime coat, it shall be applied as soon as possible after consolidation of the underlying material. To obtain uniform application of the prime coat on the surface treated at the junction of previous and subsequent applications, building paper shall be spread on the surface for a sufficient distance back from the ends of each application to start and stop the prime coat on the paper. Immediately after application, the building paper shall be removed and destroyed.

### 3.4.3 Tack Coat

Tack coat shall be applied at the locations shown on the drawings.

## 3.5 CURING PERIOD

Following application of the bituminous material and prior to application of the succeeding layer of pavement, the bituminous coat shall be allowed to cure and to obtain evaporation of any volatiles or moisture. Prime coat shall be allowed to cure without being disturbed for a period of at least 48 hours or longer, as may be necessary to attain penetration into the treated course.

## 3.6 FIELD QUALITY CONTROL

Samples of the bituminous material shall be tested for compliance with the applicable specified requirements. A sample shall be obtained and tested by the Contractor for every 1000 gallons of bituminous material used.

## 3.7 SAMPLING AND TESTING

Sampling and testing shall be performed by an approved commercial testing laboratory or by facilities furnished by the Contractor. No work requiring testing will be permitted until the facilities have been inspected and approved.

3.7.1 Sampling

The samples of bituminous material, unless otherwise specified, shall be in accordance with ASTM D 140 or AASHTO T 40. Sources from which bituminous materials are to be obtained shall be selected and notification furnished the Contracting Officer within 15 days after the award of the contract.

3.7.2 Calibration Test

The Contractor shall furnish all equipment, materials, and labor necessary to calibrate the bituminous distributor. Calibration shall be made with the approved job material and prior to applying the bituminous coat material to the prepared surface. Calibration of the bituminous distributor shall be in accordance with ASTM D 2995.

3.7.3 Trial Applications

Before providing the complete bituminous coat, three lengths of at least 100 feet for the full width of the distributor bar shall be applied to evaluate the amount of bituminous material that can be satisfactorily applied.

3.7.3.1 Tack Coat Trial Application Rate

Unless otherwise authorized, the trial application rate of bituminous tack coat materials shall be applied in the amount of 0.05 gallons per square yard. Other trial applications shall be made using various amounts of material as may be deemed necessary.

3.7.3.2 Prime Coat Trial Application Rate

Unless otherwise authorized, the trial application rate of bituminous materials shall be applied in the amount of 0.25 gallon per square yard. Other trial applications shall be made using various amounts of material as may be deemed necessary.

3.7.4 Sampling and Testing During Construction

Quality control sampling and testing shall be performed as required in paragraph FIELD QUALITY CONTROL.

-- End of Section --

SECTION TABLE OF CONTENTS

DIVISION 02 - SITE CONSTRUCTION

SECTION 02754A

CONCRETE PAVEMENTS

**07/01**

PART 1 GENERAL

1.1 REFERENCES
1.2 SYSTEM DESCRIPTION
1.3 ACCEPTABILITY OF WORK
1.3.1 Evaluation Sampling
1.3.2 Surface Testing
1.3.2.1 Surface Smoothness Requirements
1.3.2.2 Surface Smoothness Testing Method
1.3.3 Edge Slump Testing and Conformance
1.3.4 Plan Grade Testing and Conformance
1.4 PRECONSTRUCTION TESTING OF MATERIALS
1.5 SUBMITTALS
1.6 EQUIPMENT
1.6.1 Batching and Mixing
1.6.2 Transporting Equipment
1.6.3 Delivery Equipment
1.6.4 Paver Finisher
1.6.4.1 Paver-Finisher with Fixed Forms
1.6.4.2 Slipform Paver-Finisher
1.6.4.3 Other Types of Finishing Equipment
1.6.5 Curing Equipment
1.6.6 Texturing Equipment
1.6.6.1 Fabric Drag
1.6.7 Sawing Equipment
1.6.8 Straightedge

PART 2 PRODUCTS

2.1 CEMENTITIOUS MATERIALS
2.1.1 Portland Cement
2.1.2 Pozzolan (Fly Ash)
2.2 AGGREGATES
2.2.1 Coarse Aggregate
2.2.2 Fine Aggregate
2.3 CHEMICAL ADMIXTURES
2.4 CURING MATERIALS
2.5 WATER
2.6 JOINT MATERIALS
2.6.1 Expansion Joint Material
2.6.2 Slip Joint Material
2.7 REINFORCING
2.7.1 General
2.8 DOWELS
2.8.1 Dowels
2.9 EPOXY RESIN

2.10 SPECIFIED CONCRETE STRENGTH AND OTHER PROPERTIES
2.11 MIXTURE PROPORTIONS
2.11.1 Composition Concrete
2.11.2 Concrete Mixture Proportioning Studies
2.11.3 Mixture Proportioning Procedure
2.11.4 Average Strength Required for Mixtures

PART 3 EXECUTION

3.1 CONDITIONING OF UNDERLYING MATERIAL
3.2 WEATHER LIMITATIONS
3.2.1 Hot Weather Paving
3.2.2 Cold Weather Paving
3.3 CONCRETE PRODUCTION
3.3.1 General Requirements
3.3.2 Transporting and Transfer-Spreading Operations
3.4 PAVING
3.4.1 Consolidation
3.4.2 Operation
3.4.3 Required Results
3.4.4 Fixed Form Paving
3.4.5 Slipform Paving
3.4.6 Placing Reinforcing Steel
3.4.7 Placing Dowels
3.4.7.1 Contraction Joints
3.4.7.2 Construction Joints-Fixed Form Paving
3.4.7.3 Dowels Installed in Hardened Concrete
3.4.7.4 Expansion Joints
3.5 FINISHING
3.5.1 Machine Finishing With Fixed Forms
3.5.2 Machine Finishing With Slipform Pavers
3.5.3 Surface Correction
3.5.4 Hand Finishing
3.5.5 Texturing
3.5.5.1 Fabric-Drag Surface Finish
3.5.6 Edging
3.6 CURING
3.6.1 Membrane Curing
3.6.2 Moist Curing
3.7 JOINTS
3.7.1 Longitudinal Construction Joints
3.7.2 Transverse Construction Joints
3.7.3 Expansion Joints
3.7.4 Slip Joints
3.7.5 Contraction Joints
3.7.5.1 Sawed Joints
3.7.6 Thickened Edge Joints
3.7.7 Special Joints
3.8 REPAIR, REMOVAL, AND REPLACEMENT OF SLABS
3.8.1 Removal and Replacement of Full Slabs
3.8.2 Repairing Spalls Along Joints
3.8.3 Areas Defective in Plan Grade or Smoothness
3.9 EXISTING CONCRETE PAVEMENT REMOVAL AND REPAIR
3.10 PAVEMENT PROTECTION
3.11 TESTING AND INSPECTION FOR CONTRACTOR QUALITY CONTROL (CQC)
3.11.1 Batch Plant Control
3.11.2 Concrete Mixture
3.11.3 Inspection Before Placing
3.11.4 Paving Operations

3.11.5 Curing Inspection
3.11.6 Cold-Weather Protection
3.11.7 Reports

-- End of Section Table of Contents --

SECTION 02754A

CONCRETE PAVEMENTS
**07/01**

PART 1 GENERAL

1.1 REFERENCES

The publications listed below form a part of this specification to the extent referenced. The publications are referred to in the text by basic designation only.

ACI INTERNATIONAL (ACI)

| | |
|---|---|
| ACI 211.1 | (1991) Standard Practice for Selecting Proportions for Normal, Heavyweight, and Mass Concrete |
| ACI 301 | (1999) Standard Specifications for Structural Concrete |
| ACI 305R | (1999) Hot Weather Concreting |

AMERICAN SOCIETY FOR TESTING AND MATERIALS (ASTM)

| | |
|---|---|
| ASTM A 184/A 184M | (1996) Fabricated Deformed Steel Bar Mats for Concrete Reinforcement |
| ASTM A 615/A 615M | (2000) Deformed and Plain Billet-Steel Bars for Concrete Reinforcement |
| ASTM C 31/C 31M | (2000) Making and Curing Concrete Test Specimens in the Field |
| ASTM C 33 | (1999aE1) Specification for Concrete Aggregates |
| ASTM C 39/C 39M | (1999) Compressive Strength of Cylindrical Concrete Specimens |
| ASTM C 94/C 94M | (2000e2) Specification for Ready-Mixed Concrete |
| ASTM C 123 | (1998) Lightweight Particles in Aggregate |
| ASTM C 143/C 143M | (2000) Slump of Hydraulic Cement Concrete |
| ASTM C 150 | (1999a) Portland Cement |
| ASTM C 192/C 192M | (2000) Making and Curing Concrete Test Specimens in the Laboratory |
| ASTM C 231 | (1997el) Air Content of Freshly Mixed Concrete by the Pressure Method |

| | |
|---|---|
| ASTM C 260 | (2000) Air-Entraining Admixtures for Concrete |
| ASTM C 494/C 494M | (1999a) Chemical Admixtures for Concrete |
| ASTM C 618 | (2000) Coal Fly Ash and Raw or Calcined Natural Pozzolan for Use as a Mineral Admixture in Concrete |
| ASTM C 666 | (1997) Test Method for Resistance of Concrete to Rapid Freezing and Thawing |
| ASTM C 881 | (1999) Epoxy-Resin-Base Bonding Systems for Concrete |
| ASTM C 1077 | (1998) Laboratories Testing Concrete and Concrete Aggregates for Use in Construction and Criteria for Laboratory Evaluation |
| ASTM D 1751 | (1999) Preformed Expansion Joint Filler for Concrete Paving and Structural Construction (Nonextruding and Resilient Bituminous Types) |
| ASTM D 1752 | (1984; R 1996el) Preformed Sponge Rubber and Cork Expansion Joint Fillers for Concrete Paving and Structural Construction |

U.S. ARMY CORPS OF ENGINEERS (USACE)

| | |
|---|---|
| COE CRD-C 130 | (1989) Scratch Hardness of Coarse Aggregate Particles |
| COE CRD-C 300 | (1990) Specifications for Membrane-Forming Compounds for Curing Concrete |

NATIONAL READY-MIXED CONCRETE ASSOCIATION (NRMCA)

| | |
|---|---|
| NRMCA CPMB 100 | (1996) Concrete Plant Standards |

## 1.2 SYSTEM DESCRIPTION

This section is intended to stand alone for construction of concrete (rigid) pavement. However, where the construction covered herein interfaces with other sections, the construction at each interface shall conform to the requirements of both this section and the other section, including tolerances for both.

## 1.3 ACCEPTABILITY OF WORK

The pavement will be accepted on the basis of tests made by the Government and by the Contractor or its suppliers, as specified herein. The Government may, at its discretion, make check tests to validate the results of the Contractor's testing. Concrete samples shall be taken by the Contractor at the placement to determine the slump, air content, and strength of the concrete. Test cylinders shall be made for determining conformance with the strength requirements of these specifications and,

when required, for determining the time at which pavements may be placed into service. All air content measurements shall be determined in accordance with ASTM C 231. All slump tests shall be made in accordance with ASTM C 143/C 143M. All test cylinders shall be 6 by 12 inch cylinders and shall be fabricated in accordance with ASTM C 192/C 192M, using only steel molds, cured in accordance with ASTM C 31/C 31M, and tested in accordance with ASTM C 39/C 39M. A strength test shall be the average of the strengths of two cylinders made from the same sample of concrete and tested at 28 days. The Contractor shall furnish all materials, labor, and facilities required for molding, curing, testing, and protecting test specimens at the site and in the laboratory. The contractor may take additional tests to break at 3, 7, 14 or another number of days to validate strength and expedite work at the Contractors discretion and expense.

1.3.1 Evaluation Sampling

Sampling, testing, and mixture proportioning shall be performed by a commercial Testing Laboratory, conforming with ASTM C 1077. The individuals who sample and test concrete and concrete constituents shall be certified as American Concrete Institute (ACI) Concrete Field Testing Technicians, Grade I. The individuals who perform the inspection of concrete shall be certified as ACI Concrete Construction Inspector, Level II. All mix design, weekly quality control reports, smoothness reports, and project certification reports shall be signed by a Registered Engineer.

1.3.2 Surface Testing

Surface testing for surface smoothness, edge slump and plan grade shall be performed as indicated below by the Testing Laboratory. The measurements shall be properly referenced in accordance with paving lane identification and stationing, and a report given to the Government within 24 hours after measurement is made. A final report of surface testing, signed by a Registered Engineer, containing all surface measurements and a description of all actions taken to correct deficiencies, shall be provided to the Government upon conclusion of surface testing.

1.3.2.1 Surface Smoothness Requirements

The finished surfaces of the pavements shall have no abrupt change of 1/8 inch or more, and all pavements shall be within the tolerances specified in Table 1 when checked with the straightedge.

TABLE 1
STRAIGHTEDGE SURFACE SMOOTHNESS--PAVEMENTS

| Pavement Category | Direction of Testing | Tolerances inches |
|---|---|---|
| Airfield and Helicopter Paved Areas | Longitudinal | 1/4 |
| | Transverse | 1/4 |
| Roads and Streets | Longitudinal | 3/16 |
| | Transverse | 1/4 |
| Tank Hardstands, Parking Areas, Open Storage Areas | Longitudinal | 1/4 |
| | Transverse | 1/4 |

1.3.2.2 Surface Smoothness Testing Method

The surface of the pavement shall be tested with the straightedge to identify all surface irregularities exceeding the tolerances specified above. The entire area of the pavement shall be tested in both a longitudinal and a transverse direction on parallel lines approximately 15 feet apart. The straightedge shall be held in contact with the surface and moved ahead one-half the length of the straightedge for each successive measurement. The amount of surface irregularity shall be determined by placing the straightedge on the pavement surface and allowing it to rest upon the two highest spots covered by its length and measuring the maximum gap between the straightedge and the pavement surface, in the area between these two high points.

1.3.3 Edge Slump Testing and Conformance

When slip-form paving is used, not more than 15 percent of the total free edge of the slipformed portion of the pavement, shall have an edge slump exceeding 1/4 inch and no slab shall have an edge slump exceeding 3/8 inch. Edge slump shall be determined as above for surface smoothness, at each free edge of each slipformed paving lane constructed. Measurements shall be made at 5 to 15 foot spacings, and as directed. When edge slump exceeding the limits specified above is encountered on either side of the paving lane, additional straightedge measurements shall be made, if required, to define the linear limits of the excessive slump. The concrete for the entire width of the paving lane within these limits of excessive edge slump shall be removed and replaced. Adding concrete or paste to the edge or otherwise manipulating the plastic concrete after the sliding form has passed, or patching the hardened concrete, shall not be used as a method for correcting excessive edge slump.

1.3.4 Plan Grade Testing and Conformance

The finished surface of the pavements shall conform, within the tolerances shown in Table 1, to the lines, grades, and cross sections shown. The finished surface of new abutting pavements shall coincide at their juncture. The finished surface of airfield runway, taxiway, and apron pavements shall vary not more than 0.04 foot above or below the plan grade line or elevation indicated. The surfaces of other pavements shall vary not more than 0.06 foot above or below the plan grade line or elevation indicated. Each pavement category shall be checked by the Contractor for conformance with plan grade requirements by running lines of levels at intervals to determine the elevation at each joint intersection.

1.4 PRECONSTRUCTION TESTING OF MATERIALS

The Contractor shall not be entitled to any additional payment or extension of time because of delays caused by sampling and testing additional sources, or samples, necessitated by failure of any samples. Aggregates shall be sampled and tested by the Test Laboratory and shall be representative of the materials to be used for the project. Test results, signed by a Registered Engineer, shall be submitted 30 days before commencing paving. No aggregate shall be used unless test results show that it meets all requirements of these specifications, including compliance with ASTM C 33 and deleterious materials limitations.

1.5 SUBMITTALS

Government approval is required for submittals with a "G" designation;

submittals not having a "G" designation are for information only. When used, a designation following the "G" designation identifies the office that will review the submittal for the Government. The following shall be submitted in accordance with Section 01330 SUBMITTAL PROCEDURES:

SD-03 Product Data

Equipment; G-AE

Manufacturer's literature on the concrete plant; mixing equipment; hauling equipment; placing and finishing, and curing equipment; at least 7 days prior to start of paving.

Paving; G-AE

Paving Schedules at least 7 days prior to start of paving.

Mixture Proportions; G-AE

The report of the Contractor's mixture proportioning studies showing the proportions of all ingredients and supporting information on aggregate and other materials that will be used in the manufacture of concrete, at least 14 days prior to commencing concrete placing operations.

## 1.6 EQUIPMENT

### 1.6.1 Batching and Mixing

The batching plant shall conform to NRMCA CPMB 100, the equipment requirements in ASTM C 94/C 94M, and as specified. Water shall not be weighed or measured cumulatively with another ingredient. All concrete materials batching shall meet ASTM C 94/C 94M requirements. Mixers shall be stationary mixers or truck mixers. Batching, mixers, mixing time, permitted reduction of mixing time, and concrete uniformity shall meet the requirements of ASTM C 94/C 94M, and shall be documented in the initial weekly QC Report.

### 1.6.2 Transporting Equipment

Transporting equipment shall be in conformance with ASTM C 94/C 94M and as specified herein. Concrete shall be transported to the paving site in truck mixers designed with extra large blading and rear opening specifically for low slump concrete, or in agitators. Bottom-dump trucks shall not be used for delivery of concrete.

### 1.6.3 Delivery Equipment

When concrete transport equipment cannot operate on the paving lane, side-delivery transport equipment consisting of self-propelled moving conveyors shall be used to deliver concrete from the transport equipment and discharge it in front of the paver. Front-end loaders, dozers, or similar equipment shall not be used to distribute the concrete.

### 1.6.4 Paver Finisher

The paver-finisher shall be a heavy-duty, self-propelled machine designed specifically for paving and finishing high quality pavement. The paver-finisher shall spread, consolidate, and shape the plastic concrete to

the desired cross section in one pass. The paver-finisher shall be equipped with a full width "knock-down" auger, capable of operating in both directions, which will evenly spread the fresh concrete in front of the screed or extrusion plate. Immersion vibrators shall be gang mounted at the front of the paver on a frame equipped with suitable controls so that all vibrators can be operated at any desired depth within the slab or completely withdrawn from the concrete. The vibrators shall be automatically controlled so that they will be immediately stopped as forward motion of the paver ceases. The spacing of the immersion vibrators across the paving lane shall be as necessary to properly consolidate the concrete, but the clear distance between vibrators shall not exceed 30 inches, and the outside vibrators shall not exceed 12 inches from the edge of the lane. The paver-finisher shall be equipped with a transversely oscillating screed or an extrusion plate to shape, compact, and smooth the surface.

1.6.4.1 Paver-Finisher with Fixed Forms

The paver-finisher shall be equipped with wheels designed to ride the forms, keep it aligned with the forms, and to spread the preventing deformation of the forms.

1.6.4.2 Slipform Paver-Finisher

The slipform paver-finisher shall be automatically controlled and crawler mounted with padded tracks. Horizontal alignment shall be electronically referenced to a taut wire guideline. Vertical alignment shall be electronically referenced on both sides of the paver to a taut wire guideline, to an approved laser control system, or to a ski operating on a completed lane. Control from a slope-adjustment control or control operating from the underlying material shall not be used.

1.6.4.3 Other Types of Finishing Equipment

Clary screeds or other rotating tube floats will not be allowed on the project.

1.6.5 Curing Equipment

Equipment for curing is specified in paragraph CURING.

1.6.6 Texturing Equipment

Texturing equipment shall be as specified below.

1.6.6.1 Fabric Drag

A fabric drag shall consist of a piece of fabric material as wide as the lane width securely attached to a separate wheel mounted frame spanning the paving lane or to one of the other similar pieces of equipment. The material shall be wide enough to provide 12 to 18 inches dragging flat on the pavement surface. The fabric material shall be clean, reasonably new burlap, kept clean and saturated during use.

1.6.7 Sawing Equipment

Equipment for sawing joints and for other similar sawing of concrete shall be standard diamond-tip-bladed concrete saws mounted on a wheeled chassis.

1.6.8 Straightedge

The Contractor shall furnish and maintain at the job site one 12 foot straightedge for testing concrete surface smoothness. The straightedge shall be constructed of aluminum or magnesium alloy and shall have blades of box or box-girder cross section with flat bottom, adequately reinforced to insure rigidity and accuracy. Straightedges shall have handles for operation on the pavement.

PART 2 PRODUCTS

2.1 CEMENTITIOUS MATERIALS

Cementitious materials shall be only portland cement in combination with pozzolan, and shall conform to appropriate specifications listed below.

2.1.1 Portland Cement

Portland cement shall conform to ASTM C 150 Type I or II.

2.1.2 Pozzolan (Fly Ash)

Fly ash shall conform to ASTM C 618 Class F, including all the supplementary optional physical requirements. Fly ash shall conform to EPA requirements in accordance with Section 01670 RECYCLED / RECOVERED MATERIALS.

2.2 AGGREGATES

Aggregates shall consist of clean, hard, uncoated particles meeting the requirements of ASTM C 33, including deleterious materials, abrasion loss and soundness requirements of ASTM C 33, and other requirements specified herein. Aggregate not having a satisfactory demonstrable service record shall have a durability factor of 50 or more when subjected to freezing and thawing in concrete in accordance with ASTM C 666. Fine and coarse aggregates to be used in all concrete shall be evaluated and tested by the Contractor for alkali-aggregate reactivity in accordance with ASTM C 1260. Both coarse aggregate size groups shall be tested if from different sources. Test results shall have a measured expansion equal to or less than 0.08 percent at 16 days after casting. Should the test data indicate an expansion greater than 0.08 percent, the aggregate(s) shall be rejected, or additional testing, using a modified version of ASTM C 1260, shall be performed by the Contractor as described below. ASTM C 1260 shall be modified as follows to include one of the following options a. Utilize the Contractor's proposed low alkali portland cement and Class F fly ash in combination for the test proportioning. Class F fly ash shall contain less than 8 percent Calcium Oxide (CaO) and shall be used in the range of 25 to 40 percent of the total cementitious material by mass. The quantity shall be determined that will meet all the requirements of these specifications and which will lower the expansion equal to or less than 0.08 percent at 16 days after casting b. Utilize the Contractor's proposed low alkali portland cement and ground granulated blast furnace (GGBF) slag in combination for the test proportioning. GGBF slag shall be used in the range of 40 to 50 percent of the total cementitious material by mass. The quantity shall be determined that will meet all the requirements of these specifications and which will lower the expansion equal to or less than 0.08 percent at 16 days after casting. If any of the above options does not lower the expansion equal to or less than 0.08 percent at 16 days after casting, the aggregate(s) shall be rejected and the Contractor shall submit

new aggregate sources for retesting. The results of the testing shall be submitted to the Contracting Officer for evaluation and acceptance.

In addition to the grading requirements specified for coarse aggregate and for fine aggregate, the combined aggregate grading shall meet the following requirements.

a. If necessary, a blending aggregate shall be used to meet the required combined grading. This blending aggregate shall be batched separately. The combined grading of all aggregates used, in the proportions selected, shall be computed on the basis of cumulative percent retained on each sieve specified for fine and coarse aggregate.

b. The materials selected and the proportions used shall be such that when the Coarseness Factor (CF) and the Workability Factor (W) are plotted on a diagram as described in d. below, the point thus determined shall fall within the parallelogram described therein.

c. The Coarseness Factor (CF) shall be determined from the the following equation:

CF = (cumulative percent retained on the 3/8 in. sieve)(100)/(cumulative percent retained on the No. 8 sieve)

The Workability Factor (W) is defined as the cumulative percent passing the No. 8 sieve. However, W shall be adjusted, upwards only, by 2.5 percentage points for each 94 pounds of cementitious material per cubic yard greater than 564 pounds per cubic yard.

d. A diagram shall be plotted using a rectangular scale with W on the Y-axis with units from 20 (bottom) to 45 (top), and with CF on the X-axis with units from 80 (left side) to 30 (right side). On this diagram a parallelogram shall be plotted with corners at the following coordinates (CF-75, W-28), (CF-75, W-40), (CF-45, W-32.5), and (CF-45, W-41). If the point determined by the intersection of the computed CF and W does not fall within the above parallelogram, the grading of each size of aggregate used and the proportions selected shall be changed as necessary.

e. In addition, the individual percent retained on each sieve shall be plotted for the combined aggragate grading, on either rectangular or semi-log graph paper. The graph shall show a relative smooth transition between coarse and fine aggregate and shall have no major valleys or peaks in the area smaller than the No. 8 sieve. If this plot does not meet the above criteria, the grading of each size aggregate used and the proportions selected shall be changed as necessary.2.2.1 Coarse Aggregate

Coarse aggregate shall consist of crushed or uncrushed gravel, crushed stone, or a combination thereof. The nominal maximum size of the coarse aggregate shall be 1-1/2 inches. When the nominal maximum size is greater than 1 inch, the aggregates shall be furnished in two ASTM C 33 size groups, No. 67 and No. 4. The amount of deleterious material in each size of coarse aggregate shall not exceed the limits shown in ASTM C 33 Class 1N, 4M or 4S, depending on the weathering region, and the following limits:

a. Lightweight particles 1.0 max. percent by mass (ASTM C 123).

b. Other soft particles 2.0 max. percent by mass (COE CRD-C 130).

c. Total of all deleterious 5.0 max. percent by mass (substances listed in ASTM C 33 and above, exclusive of material finer than No. 200 sieve).

d. The separation medium for lightweight particles shall have a density of Sp. Gr. of 2.0.

2.2.2 Fine Aggregate

Fine aggregate shall consist of natural sand, manufactured sand, or a combination of the two, and shall be composed of clean, hard, durable particles. All fine aggregate shall be composed of clean, hard, durable particles meeting the requirements of ASTM C 33 and the requirements herein. The amount of deleterious material in the fine aggregate shall not exceed the limits in ASTM C 33 and shall not exceed the following limits:

a. Lightweight particles (ASTM C 123) 1.0 percent max. by mass using a medium with a density of Sp. Gr. of 2.0.

b. The total of all deleterious material types, listed in ASTM C 33 and above, shall not exceed 3.0 percent of the mass of the fine aggregate.

2.3 CHEMICAL ADMIXTURES

Air-entraining admixture shall conform to ASTM C 260. An accelerator shall be used only when specified in paragraph SPECIFIED CONCRETE STRENGTH AND OTHER PROPERTIES and shall not be used to reduce the amount of cementitious material used. Accelerator shall conform to ASTM C 494/C 494M Type C. Calcium chloride and admixtures containing calcium chloride shall not be used. A water-reducing or retarding admixture shall meet the requirements of ASTM C 494/C 494M. Type G or H admixtures are not allowed.

2.4 CURING MATERIALS

Membrane forming curing compound shall be a white pigmented compound conforming to COE CRD-C 300. Burlap shall be new or shall be clean material never used for anything other than curing concrete.

2.5 WATER

Water for mixing and curing shall be clean, potable, and free of injurious amounts of oil, acid, salt, or alkali.

2.6 JOINT MATERIALS

2.6.1 Expansion Joint Material

Expansion joint filler shall be a preformed material conforming to ASTM D 1751 or ASTM D 1752 Type I, II, or III. Expansion joint filler shall be 3/4 inch thick.

2.6.2 Slip Joint Material

Slip joint material shall be 1/4 inch thick expansion joint filler conforming to ASTM D 1751 or ASTM D 1752.

2.7 REINFORCING

2.7.1 General

Reinforcing bars shall conform to ASTM A 615/A 615M Grade 60. Bar mats shall conform to ASTM A 184/A 184M. Reinforcement shall be free from loose, flaky rust, loose scale, oil, grease, mud, or other coatings that might reduce the bond with concrete.

2.8 DOWELS

2.8.1 Dowels

Dowels shall be single piece, plain (non-deformed) steel bars conforming to ASTM A 615/A 615M Grade 60 or higher. Dowels shall be free of loose, flaky rust and loose scale and shall be clean and straight.

2.9 EPOXY RESIN

All epoxy-resin materials shall be two-component materials conforming to ASTM C 881, Class as appropriate for each application temperature to be encountered; except, that in addition, the materials shall meet the following requirements:

a. Material for use for embedding dowels and anchor bolts shall be Type IV, Grade 3.

b. Material for use as patching for complete filling of spalls, wide cracks, and other voids and for use in preparing epoxy resin mortar shall be Type III, Grade as approved.

c. Material for injecting cracks shall be Type IV, Grade 1.

d. Material for bonding freshly mixed portland cement concrete, mortar, or freshly mixed epoxy resin concrete to hardened concrete shall be Type V, Grade as approved.

2.10 SPECIFIED CONCRETE STRENGTH AND OTHER PROPERTIES

Specified compressive strength, f'c, for concrete is 4500 psi at 28 days. Maximum allowable water-cementitious material ratio is 0.45. The water-cementitious material ratio is based on absolute volume equivalency, where the ratio is determined using the weight of cement for a cement only mix, or using the total volume of cement plus pozzolan converted to an equivalent weight of cement by the absolute volume equivalency method described in ACI 211.1. The concrete shall be air-entrained with a total air content of 6 plus or minus 1 percent. The maximum allowable slump of the concrete shall be 3 inches for pavement constructed with fixed forms. For slipformed pavement, the maximum allowable slump shall be 1-1/4 inches. The strength of the concrete will be considered satisfactory so long as the average of all sets of three consecutive test results equals or exceeds the specified compressive strength f'c and no individual test result falls below the specified strength f'c by more than 500 psi. Additional analysis or testing, including taking cores and/or load tests may be

required at the Contractor's expense when the strength of the concrete in the structure is considered potentially deficient.

## 2.11 MIXTURE PROPORTIONS

### 2.11.1 Composition Concrete

Composition concrete shall be composed of cementitious material, water, fine and coarse aggregates, and admixtures.

Fly ash, if used, shall conform to EPA requirements in accordance with Section 01670 RECYCLED / RECOVERED MATERIALS. Fly ash if used with non alkali-reactive aggregates, shall consist of not less than 15 percent of the cementitious material by mass and not more than 35 percent. If Class F fly ash is required to mitigate potential alkali-aggregate reactivity, the percentage by mass determined from the modified ASTM C 1260 testing shall be used in the mixture proportioning studies. Class F fly ash, when used to mitigate alkali-aggregate reactivity, shall have a Calcium Oxide (CaO) content of less than 8 percent.

Admixtures shall consist of air entraining admixture and may also include accelerator, retarder, and water-reducing admixture as approved and required to meet the project conditions. High range water-reducing admixtures and admixtures to produce flowable concrete shall not be used. No substitutions shall be made in the materials used in the mixture proportions without additional tests to show that the quality of the concrete is satisfactory.

### 2.11.2 Concrete Mixture Proportioning Studies

Trial design batches, mixture proportioning studies, and testing shall be the responsibility of the Contractor, and shall be performed by the Test Laboratory and signed by a Registered Engineer. No concrete pavement shall be placed until the Contracting Officer has approved the Contractor's mixture proportions. All materials used in mixture proportioning studies shall be representative of those proposed for use on the project. If there is a change in materials, additional mixture design studies shall be made using the new materials. Trial mixtures having proportions, slumps, and air content suitable for the work shall be based on methodology described in ACI 211.1. At least three different water-cementitious ratios, which will produce a range of strength encompassing that required on the project, shall be used. Laboratory trial mixtures shall be proportioned for maximum permitted slump and air content. Maximum sand content shall be 40 percent of the total aggregate SSD weight. Aggregate quantities shall be based on the mass in a saturated surface dry condition.

The Contractor may submit a mixed design currently or recently produced for other projects in the area provide all materials used in producing concrete for this project are truly representitive of the materials used in the mix design and all test results and other documentation for the mix design submittal required and necessary to demonstrate compliance with this specification are available and provided for review and approval.

### 2.11.3 Mixture Proportioning Procedure

The Contractor shall perform the following:

a. Fabricate, cure and test 6 test cylinders per age for each mixture

at 7 and 28 days.

b. Using the average strength for each w/(c+p), plot the results from each of the three mixtures on separate graphs for w/(c+p) versus 28-day strength.

c. From the graphs select a w/(c+p) which will produce a mixture giving a 28-day strength equal to the required strength determined in accordance with the following paragraph.

2.11.4 Average Strength Required for Mixtures

In order to ensure meeting, during production, the strength requirements specified, the mixture proportions selected shall produce a required average strength, f'cr, exceeding the specified strength, f'c, in accordance with procedures in Chapter 3 of ACI 301, "Proportioning."

PART 3 EXECUTION

3.1 CONDITIONING OF UNDERLYING MATERIAL

Underlying material, subgrade and subbase course, upon which concrete is to be placed shall be clean, damp, and free from debris, waste concrete or cement, frost, ice, and standing or running water. After the underlying material has been prepared for concrete placement, no equipment shall be permitted thereon.

3.2 WEATHER LIMITATIONS

3.2.1 Hot Weather Paving

The temperature of concrete shall not exceed 90 degrees F. Steel forms, dowels and reinforcing shall be cooled prior to concrete placement when steel temperatures are greater than 120 degrees F.

3.2.2 Cold Weather Paving

The ambient temperature of the air at the placing site and the temperature of surfaces to receive concrete shall be not less 40 degrees F. The temperature of the concrete when placed shall be not less than 50 degrees F. Materials entering the mixer shall be free from ice, snow, or frozen lumps. Salt, chemicals or other materials shall not be incorporated in the concrete to prevent freezing. Calcium chloride shall not be used at any time. Covering and other means shall be provided for maintaining the concrete at a temperature of at least 50 degrees F for not less than 72 hours after placing, and at a temperature above freezing for the remainder of the curing period. Pavement damaged by freezing shall be completely removed and replaced at the Contractor's expense as specified in paragraph, REPAIR, REMOVAL, AND REPLACEMENT OF SLABS.

3.3 CONCRETE PRODUCTION

3.3.1 General Requirements

Concrete shall be deposited in front of the paver within 45 minutes from the time cement has been charged into the mixing drum, except that if the ambient temperature is above 90 degrees F, the time shall be reduced to 30 minutes. Every load of concrete delivered to the paving site shall be accompanied by a batch ticket from the operator of the batching plant.

Tickets shall show at least the mass, or volume, of all ingredients in each batch delivered, the water meter and revolution meter reading on truck mixers and the time of day. Tickets shall be delivered to the placing foreman who shall keep them on file and deliver them to the Government daily.

### 3.3.2 Transporting and Transfer-Spreading Operations

Non-agitating equipment shall be used only on smooth roads and for haul time less than 15 minutes. Equipment shall be allowed to operate on the underlying material only if no damage is done to the underlying material and its degree of compaction. Any disturbance to the underlying material that does occur shall be corrected before the paver-finisher reaches the location of the disturbance and the equipment shall be replaced or procedures changed to prevent any future damage. Additional water may be added to truck mixers to bring the slump within the specified range provided the mixture water-cement ratio is not exceeded.

## 3.4 PAVING

Pavement shall be constructed with paving and finishing equipment utilizing fixed forms or slipform construction.

### 3.4.1 Consolidation

The paver vibrators shall be inserted into the concrete not closer to the underlying material than 2 inches. The vibrators or any tamping units in front of the paver shall be automatically controlled so that they shall be stopped immediately as forward motion ceases. Excessive vibration shall not be permitted. Concrete in small, odd-shaped slabs or in locations inaccessible to the paver mounted vibration equipment shall be vibrated with a hand-operated immersion vibrator. Vibrators shall not be used to transport or spread the concrete.

### 3.4.2 Operation

When the paver is operated between or adjacent to previously constructed pavement (fill-in lanes), provisions shall be made to prevent damage to the previously constructed pavement, including keeping the existing pavement surface free of any debris, and placing rubber mats beneath the paver tracks. Transversely oscillating screeds and extrusion plates shall overlap the existing pavement the minimum possible, but in no case more than 8 inches.

### 3.4.3 Required Results

The paver-finisher shall be operated to produce a thoroughly consolidated slab throughout, true to line and grade within specified tolerances. The paver-finishing operation shall produce a surface finish free of irregularities, tears, voids of any kind, and any other discontinuities. It shall produce only a very minimum of paste at the surface. Multiple passes of the paver-finisher shall not be permitted. The equipment and its operation shall produce a finished surface requiring no hand finishing, other than the use of cutting straightedges, except in very infrequent instances. No water, other than true fog sprays (mist), shall be applied to the concrete surface during paving and finishing.

3.4.4 Fixed Form Paving

Forms shall be steel, except that wood forms may be used for curves having a radius of 150 feet or less, and for fillets. Forms may be built up with metal or wood, added only to the base, to provide an increase in depth of not more than 25 percent. The base width of the form shall be not less than eight-tenths of the vertical height of the form, except that forms 8 inches or less in vertical height shall have a base width not less than the vertical height of the form. Wood forms for curves and fillets shall be adequate in strength and rigidly braced. Forms shall be set on firm material cut true to grade so that each form section when placed will be firmly in contact with the underlying layer for its entire base. Forms shall not be set on blocks or on built-up spots of underlying material. Forms shall remain in place at least 12 hours after the concrete has been placed. Forms shall be removed without injuring the concrete.

3.4.5 Slipform Paving

The slipform paver shall shape the concrete to the specified and indicated cross section in one pass, and shall finish the surface and edges so that only a very minimum amount of hand finishing is required. Dowels shall not be installed by dowel inserters attached to the paver or by any other means of inserting the dowels into the plastic concrete.

3.4.6 Placing Reinforcing Steel

Reinforcement shall be positioned on suitable chairs securely fastened to the subgrade prior to concrete placement, or may be placed on an initial layer of consolidated concrete, with the subsequent layer placed within 30 minutes of the first layer placement.

3.4.7 Placing Dowels

Dowels shall be installed with alignment not greater than 1/8 inch per ft. Except as otherwise specified below, location of dowels shall be within a horizontal tolerance of plus or minus 5/8 inch and a vertical tolerance of plus or minus 3/16 inch. The portion of each dowel intended to move within the concrete or expansion cap shall be painted with one coat of rust inhibiting primer paint, and then greased just prior to placement. Dowels and tie bars in joints shall be omitted when the center of the dowel bar is located within a horizontal distance from an intersecting joint equal to or less than one-fourth of the slab thickness.

3.4.7.1 Contraction Joints

Dowels and tie bars in longitudinal and transverse contraction joints within the paving lane shall be held securely in place by means of rigid metal basket assemblies. The dowels and tie bars shall be welded to the assembly or held firmly by mechanical locking arrangements that will prevent them from becoming distorted during paving operations. The basket assemblies shall be held securely in the proper location by means of suitable anchors.

3.4.7.2 Construction Joints-Fixed Form Paving

Installation of dowels and tie bars shall be by the bonded-in-place method, supported by means of devices fastened to the forms. Installation by removing and replacing in preformed holes will not be permitted.

3.4.7.3 Dowels Installed in Hardened Concrete

Installation shall be by bonding the dowels into holes drilled into the hardened concrete. Holes approximately 1/8 inch greater in diameter than the dowels shall be drilled into the hardened concrete. Dowels shall be bonded in the drilled holes using epoxy resin injected at the back of the hole before installing the dowel and extruded to the collar during insertion of the dowel so as to completely fill the void around the dowel. Application by buttering the dowel shall not be permitted. The dowels shall be held in alignment at the collar of the hole, after insertion and before the grout hardens, by means of a suitable metal or plastic collar fitted around the dowel. The vertical alignment of the dowels shall be checked by placing the straightedge on the surface of the pavement over the top of the dowel and measuring the vertical distance between the straightedge and the beginning and ending point of the exposed part of the dowel. Where tie bars are required in longitudinal construction joints of slipform pavement, bent tie bars shall be installed at the paver, in front of the transverse screed or extrusion plate. If tie bars are required, a standard keyway shall be constructed, and the bent tie bars shall be inserted into the plastic concrete through a 26 gauge thick metal keyway liner. Tie bars shall not be installed in preformed holes. The keyway liner shall be protected and shall remain in place and become part of the joint. Before placement of the adjoining paving lane, the tie bars shall be straightened, without spalling the concrete around the bar.

3.4.7.4 Expansion Joints

Dowels in expansion joints shall be installed by the bonded-in-place method or by bonding into holes drilled in hardened concrete, using procedures specified above.

3.5 FINISHING

Clary screeds, "bridge deck" finishers, or other rotating pipe or tube type equipment shall not be permitted. The sequence of machine operations shall be transverse finishing, longitudinal machine floating if used, straightedge finishing, texturing, and then edging of joints. Hand finishing shall be used only infrequently and only on isolated areas of odd slab shapes and in the event of a breakdown of the mechanical finishing equipment. Supplemental hand finishing for machine finished pavement shall be kept to an absolute minimum. Equipment to be used for supplemental hand finishing shall primarily be 10 to 12 feet cutting straightedges; only very sparing use of bull floats shall be allowed. At no time shall water be added to the surface of the slab in any way, except for fog (mist) sprays to prevent plastic shrinkage cracking.

3.5.1 Machine Finishing With Fixed Forms

The machine shall be designed to ride the forms. Machines that cause displacement of the forms shall be replaced. The machine shall make only one pass over each area of pavement. If the equipment and procedures do not produce a surface of uniform texture, true to grade, in one pass, the operation shall be immediately stopped and the equipment, mixture, and procedures adjusted as necessary.

3.5.2 Machine Finishing With Slipform Pavers

If there is sufficient concrete slurry or fluid paste on the surface that it runs over the edge of the pavement, the paving operation shall be

immediately stopped and the equipment, mixture, or operation modified to prevent formation of such slurry. Any slurry which does run down the vertical edges shall be immediately removed. No slurry, concrete or concrete mortar shall be used to build up along the edges of the pavement to compensate for excessive edge slump, either while the concrete is plastic or after it hardens.

3.5.3 Surface Correction

While the concrete is still plastic, irregularities and marks in the pavement surface shall be eliminated by means of cutting straightedges, 10 to 12 feet in length. Depressions shall be filled with freshly mixed concrete, struck off, consolidated, and refinished. Projections above the required elevation shall also be struck off and refinished. Long-handled, flat "bull floats" shall be used sparingly and only as necessary to correct minor, scattered surface defects. Finishing with hand floats and trowels shall be held to the absolute minimum necessary. Joints and edges shall not be overfinished.

3.5.4 Hand Finishing

Hand finishing operations shall be used only for those unusual slabs as specified previously. Grate tampers (jitterbugs) shall not be used. As soon as placed and vibrated, the concrete shall be struck off and screeded. The surface shall be tamped with a strike-off and tamping screed, or vibratory screed. Immediately following the final tamping of the surface, the pavement shall be floated longitudinally. Long-handled, flat bull floats shall be used sparingly and only as necessary to correct surface defects. Finishing with hand floats and trowels shall be held to the absolute minimum necessary. Joints and edges shall not be overfinished. No water shall be added to the pavement during finishing operations.

3.5.5 Texturing

Before the surface sheen has disappeared and before the concrete hardens, the surface of the pavement shall be given a texture as described herein. Following initial texturing on the first day of placement, the Placing Foreman, Contracting Officer representative, and a representative of the Using Agency shall inspect the texturing for compliance with design requirements. After curing is complete, all textured surfaces shall be thoroughly power broomed to remove all debris. The concrete in areas of recesses for tie-down anchors, lighting fixtures, and other outlets in the pavement shall be finished to provide a surface of the same texture as the surrounding area.

3.5.5.1 Fabric-Drag Surface Finish

Surface texture shall be applied by dragging the surface of the pavement, in the direction of the concrete placement, with a moist fabric drag. The dragging shall produce a uniform finished surface having a fine sandy texture without disfiguring marks.

3.5.6 Edging

The edges of slipformed lanes shall not be edged. After texturing has been completed, the edge of the slabs along the forms shall be carefully finished with an edging tool to form a smooth rounded surface of 1/8 inch radius. No water shall be added to the surface during edging.

## 3.6 CURING

Concrete shall be continuously protected against loss of moisture and rapid temperature changes for at least 7 days from the completion of finishing operations. Unhardened concrete shall be protected from rain and flowing water. During hot weather with low humidity and/or wind, the Contractor shall institute measures to prevent plastic shrinkage cracks from developing. ACI 305R contains means of predicting plastic shrinkage cracking and preventative measures. Plastic shrinkage cracks that occur shall be filled by injection of epoxy resin after the concrete hardens. Plastic shrinkage cracks shall never be troweled over or filled with slurry. Curing shall be accomplished by one of the following methods.

### 3.6.1 Membrane Curing

A uniform coating of white-pigmented membrane-forming curing compound shall be applied to the entire exposed surface of the concrete including pavement edges as soon as the free water has disappeared from the surface after finishing. If evaporation is high and no moisture is present on the surface even though bleeding has not stopped, fog sprays shall be used to keep the surface moist until setting of the cement occurs. Curing compound shall then be immediately applied. Curing compound shall be applied to the finished surfaces by means of a self-propelled automatic spraying machine, equipped with multiple spraying nozzles with wind shields, spaning the newly paved lane. The curing compound shall be applied at a maximum application rate of 200 square feet per gallon. The application of curing compound by hand-operated, mechanical powered pressure sprayers will be permitted only on odd widths or shapes of slabs where indicated and on concrete surfaces exposed by the removal of forms. The compound shall form a uniform, continuous, cohesive film that will not check, crack, or peel and that will be free from pinholes and other discontinuities. Areas where the curing compound develops the above defects or is damaged by heavy rainfall, sawing or other construction operations within the curing period, shall be immediately resprayed.

### 3.6.2 Moist Curing

Concrete to be moist-cured shall be maintained continuously wet for the entire curing period, commencing immediately after finishing. Surfaces shall be cured by ponding, by continuous sprinkling, by continuously saturated burlap or cotton mats, or by continuously saturated plastic coated burlap. Impervious sheet curing shall not be used.

## 3.7 JOINTS

No deviation from the jointing pattern shown on the drawings shall be made without written approval of the Design District Pavement or Geotechnical Engineer. All joints shall be straight, perpendicular to the finished grade of the pavement, and continuous from edge to edge or end to end of the pavement with no abrupt offset and no gradual deviation greater than 1/2 inch.

### 3.7.1 Longitudinal Construction Joints

Dowels and Tie bars shall be installed in the longitudinal construction joints as indicated.

3.7.2 Transverse Construction Joints

Transverse construction joints shall be installed at a planned transverse joint, at the end of each day's placing operations and when concrete placement is interrupted. Transverse construction joints shall be constructed either by utilizing headers and hand placement and finishing techniques, or by placing concrete beyond the transverse construction joint location and then saw cutting full depth and removing concrete back to the transverse construction joint location. For the latter case, dowels shall be installed using methods for dowels installed in hardened concrete described above. All transverse construction joints shall be dowelled.

3.7.3 Expansion Joints

Expansion joints shall be formed where indicated, and about any structures and features that project through or into the pavement, using preformed joint filler of the type, thickness, and width indicated, and shall extend the full slab depth. Edges of the concrete at the joint face shall be edged. The joint filler strips shall be installed to form a recess at the pavement surface to be filled with joint sealant. Expansion joints shall be constructed with dowels for load transfer.

3.7.4 Slip Joints

Slip joints shall be installed the full depth of the slab using expansion joint preformed joint filler material attached to the face of the original concrete placement. A reservoir for joint sealant shall be constructed at the top of the joint. Edges of the joint face shall be edged.

3.7.5 Contraction Joints

Transverse and longitudinal contraction joints shall be of the weakened-plane or dummy type. Longitudinal contraction joints shall be constructed by sawing a groove in the hardened concrete with a power-driven saw. Transverse contraction joints shall be constructed in conformance with requirements for sawed joints.

3.7.5.1 Sawed Joints

Sawed contraction joints shall be constructed by sawing a groove in the concrete with a 1/8 inch blade to the indicated depth. The time of initial sawing shall vary depending on existing and anticipated weather conditions and shall be such as to prevent uncontrolled cracking of the pavement. Sawing of the joints shall commence as soon as the concrete has hardened sufficiently to permit cutting the concrete without chipping, spalling, or tearing. The joints shall be sawed at the required spacing consecutively in the sequence of the concrete placement. Sawing at a given joint location shall be discontinued when a crack develops ahead of the saw cut. Immediately after the joint is sawed, the saw cut and adjacent concrete surface shall be thoroughly flushed with water until all waste from sawing is removed from the joint. The surface shall be resprayed with curing compound as soon as free water disappears. The top of the joint opening and the joint groove at exposed edges shall be tightly sealed with cord or backer rod before the concrete in the region of the joint is resprayed with curing compound.

3.7.6 Thickened Edge Joints

Underlying material in the transition area shall meet the requirements for

smoothness and compaction specified for all other areas of the underlying material.

3.7.7 Special Joints

Special joints (undercut joints) shall be constructed adjacent to existing pavement as indicated. The concrete shall be worked under the edge of the existing pavement to completely fill the void and shall be thoroughly consolidated by the use of hand-held vibrators.

3.8 REPAIR, REMOVAL, AND REPLACEMENT OF SLABS

New pavement slabs that contain full-depth cracks shall be removed and replaced, as specified herein at no cost to the Government. Removal and replacement shall be full depth, shall be full width of the paving lane, and the limit of removal shall be from each original transverse joint . The Contracting Officer will determine whether cracks extend full depth of the pavement and may require minimum 6 inch diameter cores to be drilled on the crack to determine depth of cracking. Cores shall be drilled and the hole later filled by the Contractor with a well consolidated concrete mixture bonded to the walls of the hole with epoxy resin. Drilling of cores and refilling holes shall be at no expense to the Government. Cracks that do not extend full depth of slab shall be cleaned and then pressure injected with epoxy resin, Type IV, Grade 1. The Contractor shall ensure that the crack is not widened during epoxy resin injection. Where a full depth crack intersects the original transverse joint, the slab(s) containing the crack shall be removed and replaced, with dowels installed, as required below. Spalls along joints shall be repaired as specified.

3.8.1 Removal and Replacement of Full Slabs

Unless there are keys or dowels present, all edges of the slab shall be sawcut full depth. If keys, dowels, or tie bars are present along any edges, these edges shall be sawed full depth 6 inches from the edge if only keys are present, or just beyond the end of dowels or tie bars if they are present. These joints shall then be carefully sawed on the joint line to within 1 inch of the depth of the dowel or key. The main slab shall be further divided by sawing full depth, at appropriate locations, and each piece lifted out and removed. The narrow strips along keyed or doweled edges shall be carefully broken up and removed. Care shall be taken to prevent damage to the dowels, tie bars, or keys or to concrete to remain in place. Protruding portions of dowels shall be painted and lightly oiled. The joint face below keys or dowels shall be suitably trimmed so that there is no abrupt offset. If underbreak occurs at any point along any edge, the area shall be hand-filled with concrete, producing an even joint face from top to bottom, before replacing the removed slab. If underbreak over 4 inches deep occurs, the entire slab containing the underbreak shall be removed and replaced. Where there are no dowels, tie bars, or keys on an edge, or where they have been damaged, dowels of the size and spacing as specified for other joints in similar pavement shall be installed by epoxy grouting them into holes drilled into the existing concrete. Original damaged dowels or tie bars shall be cut off flush with the joint face. All four edges of the new slab shall thus contain dowels or original keys or original tie bars. Prior to placement of new concrete, the underlying material shall be graded and recompacted, and the surfaces of all four joint faces shall be cleaned of all loose material and contaminants, and coated with a double application of membrane forming curing compound as bond breaker. Placement of concrete shall be as specified for original construction. The resulting joints around the new slab shall be prepared

and sealed as specified.

3.8.2 Repairing Spalls Along Joints

Spalls along joints and cracks shall be repaired by first making a vertical saw cut at least 1 inch outside the spalled area and to a depth of at least 2 inches. Saw cuts shall be straight lines forming rectangular areas. The concrete between the saw cut and the joint, or crack, shall be chipped out to remove all unsound concrete. The cavity shall be thoroughly cleaned with high pressure water jets supplemented with compressed air to remove all loose material. Immediately before filling the cavity, a prime coat shall be applied to the dry cleaned surface of all sides and bottom of the cavity, except any joint face. The prime coat shall be applied in a thin coating and scrubbed into the surface with a stiff-bristle brush. Prime coat for portland cement repairs shall be a neat cement grout and for epoxy resin repairs shall be epoxy resin, Type III, Grade 1. The cavity shall be filled with low slump portland cement concrete or mortar, or with epoxy resin concrete or mortar. Portland cement concrete shall be used for larger spalls, those more than 1/3 cu. ft. in size after removal operations; portland cement mortar shall be used for spalls between 0.03 and 1/3 cu. ft; and epoxy resin mortar or Type III, Grade 3 epoxy resin for those spalls less than 0.03 cu. ft. in size after removal operations. Portland cement concretes and mortars shall be very low slump mixtures, proportioned, mixed, placed, tamped, and cured. If the materials and procedures are approved in writing, latex modified concrete mixtures may be used for repairing spalls less than 1/3 cu.ft. in size. Epoxy resin mortars shall be made with Type III, Grade 1, epoxy resin, using proportions, mixing, placing, tamping and curing procedures as recommended by the manufacturer. Any repair material on the surrounding surfaces of the existing concrete shall be removed before it hardens. Where the spalled area abuts a joint, an insert or other bond-breaking medium shall be used to prevent bond at the joint face. A reservoir for the joint sealant shall be sawed to the dimensions required for other joints. In lieu of sawing, spalls not adjacent to joints, and popouts, both less than 6 inches in maximum dimension, may be prepared by drilling a core 2 inches in diameter greater than the size of the defect, centered over the defect, and 2 inches deep or 1/2 inch into sound concrete, whichever is greater. The core hole shall be repaired as specified above for other spalls.

3.8.3 Areas Defective in Plan Grade or Smoothness

In areas not meeting the specified limits for surface smoothness and plan grade, high areas shall be reduced to attain the required smoothness and grade, except as depth is limited below. High areas shall be reduced by grinding the hardened concrete with a surface grinding machine after the concrete is 14 days or more old. The depth of grinding shall not exceed 1/4 inch. All pavement areas requiring plan grade or surface smoothness corrections in excess of the specified limits, shall be removed and replaced. All areas in which grinding has been performed will be subject to the thickness tolerances specified in paragraph Thickness. Any grinding performed on individual slabs with excessive deficiencies shall be performed at the Contractor's own decision without entitlement to additional compensation if eventual removal of the slab is required.

3.9 EXISTING CONCRETE PAVEMENT REMOVAL AND REPAIR

Existing concrete pavement shall be removed as indicated and as specified in Section 02220 DEMOLITION modified, and expanded as specified herein. Removal, repair and replacement shall be made as indicated and as specified

in paragraph REPAIR, REMOVAL, AND REPLACEMENT OF SLABS.

## 3.10 PAVEMENT PROTECTION

The Contractor shall protect the pavement against all damage prior to final acceptance of the work. Traffic shall be excluded from the new pavement. As a construction expedient in paving intermediate lanes between newly paved pilot lanes, operation of the hauling equipment will be permitted on the new pavement after the pavement has been cured for 7 days and the joints have been sealed or otherwise protected. All new and existing pavement carrying construction traffic or equipment shall be continuously kept completely clean. Special cleaning and care shall be used where Contractor's traffic uses or crosses active airfield pavement.

## 3.11 TESTING AND INSPECTION FOR CONTRACTOR QUALITY CONTROL (CQC)

Paragraph ACCEPTABILITY OF WORK contains additional CQC requirements. The Contractor shall perform the inspection and tests described below and, based upon the results of these inspections and tests, shall take the action required and submit reports as specified. When, in the opinion of the Contracting Officer, the paving operation is out of control, concrete placement shall cease.

### 3.11.1 Batch Plant Control

A daily report shall be prepared indicating checks made for scale accuracy with test weights, checks of batching accuracy, and corrective action taken prior to and during placement for weighing or batching, type and source of cement used, type and source of pozzolan or slag used, amount and source of admixtures used, aggregate source, the required aggregate and water masses per cubic yard, amount of water as free moisture in each size of aggregate, and the batch aggregate and water masses per cubic yard for each class of concrete batched during each day's plant operation.

### 3.11.2 Concrete Mixture

a. Air Content Testing. Air content tests shall be made when test specimens are fabricated. In addition, at least two other tests for air content shall be made on randomly selected batches of each separate concrete mixture produced during each 8-hour period of paving. Whenever air content reaches specified limits, an immediate confirmatory test shall be made. If the second test also shows air content at or exceeding specified limits, an adjustment shall immediately be made in the amount of air-entraining admixture batched to bring air content within specified limits. If the next adjusted batch of concrete is not within specified limits, concrete placement shall be halted until concrete air content is within specified limits.

b. Slump Testing. Slump tests shall be made when test specimens are fabricated. Additional tests shall be made when excessive variation in workability is reported by the placing foreman or Government inspector. Whenever slump approaches the maximum limit, an adjustment shall immediately be made in the batch masses of water and fine aggregate, without exceeding the maximum w/(c+p). When a slump result exceeds the specification limit, no further concrete shall be delivered to the paving site until adjustments have been made and slump is again within the limit.

c. Temperature. The temperature of the concrete shall be measured when strength specimens are fabricated.

d. Concrete Strength Testing. Four (4) cylinders from the same batch shall be fabricated, cured and tested for compressive strength, testing two cylinders at 7-day and two cylinders at 28-day age. A minimum of one set of four (4) cylinders shall be fabricated, cured and tested for each shift of concrete placement, but not less than one set of four cylinders for every 200 cubic yards. Control charts for strength, showing the 7-day and 28-day CQC compressive strengths, and the 28-day required compressive strength, shall be maintained and submitted with weekly CQC Reports.

3.11.3 Inspection Before Placing

Underlying materials, joint locations and types, construction joint faces, forms, reinforcing, dowels, and embedded items shall be inspected by a Registered Engineer in sufficient time prior to each paving operation in order to certify to the Contracting Officer that they are ready to receive concrete. The results of each inspection shall be reported in writing, and the certification signed by the Registered Engineer, prior to each days' paving.

3.11.4 Paving Operations

The placing foreman shall supervise all placing and paving operations, shall determine that the correct quality of concrete is placed in each location as shown, shall insure that the concrete is consolidated full depth and that finishing is performed as specified. The placing foreman shall be responsible for measuring and recording concrete temperatures and ambient temperature hourly during placing operations, weather conditions, time of placement, volume of concrete placed, and method of paving and any problems encountered.

3.11.5 Curing Inspection

a. Moist Curing Inspections. Each day on both work and non-work days, an inspection shall be made of all areas subject to moist curing. The surface moisture condition shall be noted and recorded. When any inspection finds an area of inadequate curing, immediate corrective action shall be taken, and the required curing period for the area shall be extended by 1 day.

b. Membrane Curing Inspection. At the end of each day's placement, the CQC Representative shall determine the quantity of compound used by measurement of the container; shall determine the area of concrete surface covered; shall then compute the rate of coverage in square feet per gallon and shall also note whether or not coverage is uniform. When the coverage rate of the curing compound is less than that specified or when the coverage is not uniform, the entire surface shall be sprayed again.

3.11.6 Cold-Weather Protection

At least once per day, an inspection shall be made of all areas subject to cold-weather protection. Any deficiencies shall be noted, corrected, and reported.

3.11.7 Reports

All results of tests or inspections conducted shall be reported informally as they are completed and in writing daily. A weekly report, signed by a registered engineer, shall be prepared for the updating of control charts and test data, and all CQC inspections and actions covering the entire period from the start of the construction through the current week. Reports of failures and the action taken shall be confirmed in writing in the routine reports. The Contracting Officer has the right to examine all CQC records. A copy of weekly reports shall be faxed to the Design District Pavement or Geotechnical Engineer. At the completion of concrete placement, a certification report shall be prepared containing mix designs, all updated control charts and concrete test data, quality control reports, smoothness reports, and other pertinent data on the concrete, with a certification by a registered engineer that the concrete placed meets all specification requirements. A copy of the certification report shall be mailed to the Design District pavement or Geotechnical Engineer.

-- End of Section --

SECTION TABLE OF CONTENTS

DIVISION 02 - SITE CONSTRUCTION

SECTION 02760A

FIELD MOLDED SEALANTS FOR SEALING JOINTS IN RIGID PAVEMENTS

**02/03**

PART 1 GENERAL

1.1 REFERENCES
1.2 SUBMITTALS
1.3 TEST REQUIREMENTS
1.4 EQUIPMENT
1.4.1 Joint Cleaning Equipment
1.4.1.1 Tractor-Mounted Routing Tool
1.4.1.2 Concrete Saw
1.4.1.3 Sandblasting Equipment
1.4.1.4 Waterblasting Equipment
1.4.1.5 Hand Tools
1.4.2 Sealing Equipment
1.4.2.1 Two-Component, Cold-Applied, Machine Mix Sealing Equipment
1.4.2.2 Two-Component, Cold-Applied, Hand-Mix Sealing Equipment
1.4.2.3 Cold-Applied, Single-Compnent Sealing Equipment
1.5 TRIAL JOINT SEALANT INSTALLATION
1.6 DELIVERY AND STORAGE
1.7 ENVIRONMENTAL CONDITIONS

PART 2 PRODUCTS

2.1 SEALANTS
2.2 PRIMERS
2.3 BACKUP MATERIALS
2.4 BOND BREAKING TAPES

PART 3 EXECUTION

3.1 PREPARATION OF JOINTS
3.1.1 Existing Sealant Removal
3.1.2 Sawing
3.1.2.1 Refacing of Joints
3.1.2.2 Refacing of Random Cracks
3.1.3 Sandblasting
3.1.4 Back-Up Material
3.1.5 Bond Breaking Tape
3.1.6 Rate of Progress of Joint Preparation
3.2 PREPARATION OF SEALANT
3.2.1 Hot-Poured Sealants
3.2.2 Type M Sealants
3.2.3 Type H Sealants
3.2.4 Single-Component, Cold-Applied Sealants
3.3 INSTALLATION OF SEALANT
3.3.1 Time of Application
3.3.2 Sealing Joints

3.4 INSPECTION
3.4.1 Joint Cleaning
3.4.2 Joint Sealant Application Equipment
3.4.3 Joint Sealant
3.5 CLEAN-UP

-- End of Section Table of Contents --

SECTION 02760A

FIELD MOLDED SEALANTS FOR SEALING JOINTS IN RIGID PAVEMENTS
**02/03**

PART 1 GENERAL

1.1 REFERENCES

The publications listed below form a part of this specification to the extent referenced. The publications are referred to within the text by the basic designation only.

ASTM INTERNATIONAL (ASTM)

| | |
|---|---|
| ASTM C 509 | Elastomeric Cellular Preformed Gasket and Sealing Material |
| ASTM D 789 | Test Methods for Determination of Relative Viscosity, Melting Point, and Moisture Content of Polyamide(PA) |
| ASTM D 5893 | (1996) Cold Applied, Single Component, Chemically Curing Silicon Joint Sealant for Portland Cement Concrete Pavements |

U.S. GENERAL SERVICES ADMINISTRATION (GSA)

| | |
|---|---|
| FS SS-S-200 | (Rev E; Am 2) Sealant, Joint, Two-Component, Jet-Blast-Resistant, Cold-Applied, for Portland Cement Concrete Pavement |

1.2 SUBMITTALS

Government approval is required for submittals with a "G" designation; submittals not having a "G" designation are for information only or as otherwise designated. When used, a designation following the "G" designation identifies the office that will review the submittal for the Government. The following shall be submitted in accordance with Section 01330 SUBMITTAL PROCEDURES:

SD-03 Product Data

Manufacturer's Recommendations; G-AE.

Where installation procedures, or any part thereof, are required to be in accordance with the manufacturer's recommendations, printed copies of these recommendations, 14 days prior to use on the project. Installation of the material will not be allowed until the recommendations are received. Failure to furnish these recommendations can be cause for rejection of the material.

Equipment; G-AE.

List of proposed equipment to be used in performance of

construction work including descriptive data, 14 days prior to use on the project.

## 1.3 TEST REQUIREMENTS

Testing of the materials shall be performed in an approved independent laboratory and certified copies of the test reports shall be submitted and approved 14 days prior to the use of the materials at the job site. Samples will be retained by the Government for possible future testing should the materials appear defective during or after application. Conformance with the requirements of the laboratory tests specified will not constitute final acceptance of the materials. Final acceptance will be based on the performance of the in-place materials.

## 1.4 EQUIPMENT

Machines, tools, and equipment used in the performance of the work required by this section shall be approved before the work is started and shall be maintained in satisfactory condition at all times.

### 1.4.1 Joint Cleaning Equipment

#### 1.4.1.1 Tractor-Mounted Routing Tool

The routing tool used for removing old sealant from the joints shall be of such shape and dimensions and so mounted on the tractor that it will not damage the sides of the joints. The tool shall be designed so that it can be adjusted to remove the old material to varying depths as required. The use of V-shaped tools or rotary impact routing devices will not be permitted. Hand-operated spindle routing devices may be used to clean and enlarge random cracks.

#### 1.4.1.2 Concrete Saw

A self-propelled power saw with water-cooled diamond or abrasive saw blades will be provided for cutting joints to the depths and widths specified or for refacing joints or cleaning sawed joints where sandblasting does not provide a clean joint.

#### 1.4.1.3 Sandblasting Equipment

Sandblasting equipment shall include an air compressor, hose, and long-wearing venturi-type nozzle of proper size, shape and opening. The maximum nozzle opening should not exceed 1/4 inch. The air compressor shall be portable and shall be capable of furnishing not less than 150 cfm and maintaining a line pressure of not less than 90 psi at the nozzle while in use. Compressor capability under job conditions must be demonstrated before approval. The compressor shall be equipped with traps that will maintain the compressed air free of oil and water. The nozzle shall have an adjustable guide that will hold the nozzle aligned with the joint approximately 1 inch above the pavement surface. The height, angle of inclination and the size of the nozzle shall be adjusted as necessary to secure satisfactory results.

#### 1.4.1.4 Waterblasting Equipment

Waterblasting equipment shall include a trailer-mounted water tank, pumps, high-pressure hose, wand with safety release cutoff control, nozzle, and auxiliary water resupply equipment. The water tank and auxiliary resupply

equipment shall be of sufficient capacity to permit continuous operations. The nozzle shall have an adjustable guide that will hold the nozzle aligned with the joint approximately 1 inch above the pavement surface. The height, angle of inclination and the size of the nozzle shall be adjustable as necessary to obtain satisfactory results. A pressure gauge mounted at the pump shall show at all times the pressure in pounds per square inch at which the equipment is operating.

1.4.1.5 Hand Tools

Hand tools may be used, when approved, for removing defective sealant from a crack and repairing or cleaning the crack faces.

1.4.2 Sealing Equipment

1.4.2.1 Two-Component, Cold-Applied, Machine Mix Sealing Equipment

The equipment used for proportioning, mixing, and installing FS SS-S-200 Type M joint sealants shall be designed to deliver two semifluid components through hoses to a portable mixer at a preset ratio of 1 to 1 by volume using pumps with an accuracy of plus or minus 5 percent for the quantity of each component. The reservoir for each component shall be equipped with mechanical agitation devices that will maintain the components in a uniform condition without entrapping air. Provisions shall be incorporated to permit thermostatically controlled indirect heating of the components, when required. However, immediately prior to proportioning and mixing, the temperature of either component shall not exceed 90 degrees F. Screens shall be provided near the top of each reservoir to remove any foreign particles or partially polymerized material that could clog fluid lines or otherwise cause misproportioning or improper mixing of the two components. The equipment shall be capable of thoroughly mixing the two components through a range of application rates of 10 to 60 gallons per hour and through a range of application pressures from 50 to 1500 psi as required by material, climatic, or operating conditions. The mixer shall be designed for the easy removal of the supply lines for cleaning and proportioning of the components. The mixing head shall accommodate nozzles of different types and sizes as may be required by various operations. The dimensions of the nozzle shall be such that the nozzle tip will extend into the joint to allow sealing from the bottom of the joint to the top. The initially approved equipment shall be maintained in good working condition, serviced in accordance with the supplier's instructions, and shall not be altered in any way without obtaining prior approval.

1.4.2.2 Two-Component, Cold-Applied, Hand-Mix Sealing Equipment

Mixing equipment for FS SS-S-200 Type H sealants shall consist of a slow-speed electric drill or air-driven mixer with a stirrer in accordance with the manufacturer's recommendations.

1.4.2.3 Cold-Applied, Single-Compnent Sealing Equipment

The equipment for installing ASTM D 5893 single component joint sealants shall consist of an extrusion pump, air compressor, following plate, hoses, and nozzle for transferring the sealant from the storage container into the joint opening. The dimension of the nozzle shall be such that the tip of the nozzle will extend into the joint to allow sealing from the bottom of the joint to the top. The initially approved equipment shall be maintained in good working condition, serviced in accordance with the supplier's instructions, and shall not be altered in any way without obtaining prior

approval. Small hand-held air-powered equipment (i.e., caulking guns) may be used for small applications.

1.5 TRIAL JOINT SEALANT INSTALLATION

Prior to the cleaning and sealing of the joints for the entire project, a test section of at least 200 feet long shall be prepared using the specified materials and approved equipment, so as to demonstrate the proposed joint preparation and sealing of all types of joints in the project. Following the completion of the test section and before any other joint is sealed, the test section shall be inspected to determine that the materials and installation meet the requirements specified. If it is determined that the materials or installation do not meet the requirements, the materials shall be removed, and the joints shall be recleaned and resealed at no cost to the Government. When the test section meets the requirements, it may be incorporated into the permanent work and paid for at the contract unit price per linear foot for sealing items scheduled. All other joints shall be prepared and sealed in the manner approved for sealing the test section.

1.6 DELIVERY AND STORAGE

Materials delivered to the job site shall be inspected for defects, unloaded, and stored with a minimum of handling to avoid damage. Storage facilities shall be provided by the Contractor at the job site for maintaining materials at the temperatures and conditions recommended by the manufacturer.

1.7 ENVIRONMENTAL CONDITIONS

The ambient air temperature and the pavement temperature within the joint wall shall be a minimum of 50 degrees F and rising at the time of application of the materials. Sealant shall not be applied if moisture is observed in the joint.

PART 2 PRODUCTS

2.1 SEALANTS

Materials for sealing cracks in the various paved areas indicated on the drawings shall be as follows:

| Area | Sealing Material |
|---|---|
| Aircraft ramp and aprons<br>POL Facility & Tank Dikes | FS SS-S-200 Type M or H<br>ASTM D 5893 |

Use non-sag formulation on sloped (6:1 slope or more) and vertical surfaces.

2.2 PRIMERS

When primers are recommended by the manufacturer of the sealant, their use shall be in accordance with the recommendation of the manufacturer.

2.3 BACKUP MATERIALS

The backup material shall be a compressible, nonshrinking, nonstaining,

nonabsorbing material and shall be nonreactive with the joint sealant. The material shall have a melting point at least 5 degrees F greater than the pouring temperature of the sealant being used when tested in accordance with ASTM D 789. The material shall have a water absorption of not more than 5 percent of the sample weight when tested in accordance with ASTM C 509. The backup material shall be 25 plus or minus 5 percent larger in diameter than the nominal width of the crack.

## 2.4 BOND BREAKING TAPES

The bond breaking tape or separating material shall be a flexible, nonshrinkable, nonabsorbing, nonstaining, and nonreacting adhesive-backed tape. The material shall have a melting point at least 5 degrees F greater than the pouring temperature of the sealant being used when tested in accordance with ASTM D 789. The bond breaker tape shall be approximately 1/8 inch wider than the nominal width of the joint and shall not bond to the joint sealant.

# PART 3 EXECUTION

## 3.1 PREPARATION OF JOINTS

Immediately before the installation of the sealant, the joints shall be thoroughly cleaned to remove all laitance, curing compound, filler, protrusions of hardened concrete, and old sealant from the sides and upper edges of the joint space to be sealed.

### 3.1.1 Existing Sealant Removal

The in-place sealant shall be cut loose from both joint faces and to the depth shown on the drawings, using the tractor-mounted routing equipment, concrete saw or waterblaster as specified in paragraph EQUIPMENT. Depth shall be sufficient to accommodate any separating or backup material that is required to maintain the depth of new sealant to be installed. Prior to further cleaning operations, all loose old sealant remaining in the joint opening shall be removed by blowing with compressed air. Hand tools may be required to remove sealant from random cracks. Chipping, spalling, or otherwise damaging the concrete will not be allowed.

### 3.1.2 Sawing

#### 3.1.2.1 Refacing of Joints

Refacing and facing of joints shall be accomplished using a concrete saw as specified in paragraph EQUIPMENT to remove all residual old sealant and a minimum of concrete from the joint face to provide exposure of newly cleaned concrete, and, if required, to enlarge the joint opening to the width and depth shown on the drawings. The blade shall be stiffened with a sufficient number of suitable dummy (used) blades or washers. Immediately following the sawing operation, the joint opening shall be thoroughly cleaned using a water jet to remove all saw cuttings and debris.

#### 3.1.2.2 Refacing of Random Cracks

Sawing of the cracks shall be accomplished using a power-driven concrete saw as specified in paragraph EQUIPMENT. The saw blade shall be 6 inches or less in diameter to enable the saw to follow the trace of the crack. The blade shall be stiffened as necessary with suitable dummy (or used) blades or washers. Immediately following the sawing operation, the crack

opening shall be thoroughly cleaned using a water jet to remove all saw cuttings and debris.

3.1.3 Sandblasting

The newly exposed concrete joint faces and the pavement surfaces extending a minimum of 1/2 inch from the joint edges shall be sandblasted and waterblasted clean. A multiple-pass technique shall be used until the surfaces are free of dust, dirt, curing compound, filler, old sealant residue, or any foreign debris that might prevent the bonding of the sealant to the concrete. After final cleaning and immediately prior to sealing, the joints shall be blown out with compressed air and left completely free of debris and water.

3.1.4 Back-Up Material

Joint openings shall be plugged or sealed off using a back-up material to prevent the entrance of the sealant below the specified depth. Care shall be taken to ensure that the backup material is placed at the specified depth and is not stretched or twisted during installation.

3.1.5 Bond Breaking Tape

Where inserts or filler materials contain bitumen, or the depth of the joint opening does not allow for the use of a backup material, a bond breaker separating tape will be inserted to prevent incompatibility with the filler materials and three-sided adhesion of the sealant. The tape shall be securely bonded to the bottom of the joint opening so it will not float up into the new sealant.

3.1.6 Rate of Progress of Joint Preparation

The stages of joint preparation which include sandblasting, air pressure cleaning and placing of the back-up material shall be limited to only that lineal footage that can be sealed during the same day.

3.2 PREPARATION OF SEALANT

3.2.1 Hot-Poured Sealants

Sealants shall not be heated in excess of the safe heating temperature recommended by the manufacturer as shown on the sealant containers. Sealant that has been overheated or subjected to application temperatures for over 4 hours or that has remained in the applicator at the end of the day's operation shall be withdrawn and wasted.

3.2.2 Type M Sealants

The FS SS-S-200 Type M sealant components and containers shall be inspected prior to use. Any materials that contain water, hard caking of any separated constituents, nonreversible jell, or materials that are otherwise unsatisfactory shall be rejected. Settlement of constituents in a soft mass that can be readily and uniformly remixed in the field with simple tools shall not be cause for rejection. Prior to transfer of the components from the shipping containers to the appropriate reservoir of the application equipment, the materials shall be thoroughly mixed to ensure homogeneity of the components and incorporation of all constituents at the time of transfer. When necessary for remixing prior to transfer to the application equipment reservoirs, the components shall be warmed to a

temperature not to exceed 90 degrees F by placing the components in heated storage or by other approved methods but in no case shall the components be heated by direct flame, or in a single walled kettle, or a kettle without an oil bath.

### 3.2.3 Type H Sealants

The FS SS-S-200 Type H sealant components shall be mixed either in the container furnished by the manufacturer or a cylindrical metal container of volume approximately 50 percent greater than the package volume. The base material shall be thoroughly mixed in accordance with the manufacturer's instructions. The cure component shall then be slowly added during continued mixing until a uniform consistency is obtained.

### 3.2.4 Single-Component, Cold-Applied Sealants

The ASTM D 5893 sealant and containers shall be inspected prior to use. Any materials that contain water, hard caking of any separated constituents, nonreversible jell, or materials that are otherwise unsatisfactory shall be rejected. Settlement of constituents in a soft mass that can be readily and uniformly remixed in the field with simple tools will not be cause for rejection.

## 3.3 INSTALLATION OF SEALANT

### 3.3.1 Time of Application

Joints shall be sealed immediately following final cleaning of the joint walls and following the placement of the separating or backup material. Open joints that cannot be sealed under the conditions specified, or when rain interrupts sealing operations shall be recleaned and allowed to dry prior to installing the sealant.

### 3.3.2 Sealing Joints

Immediately preceding, but not more than 50 feet ahead of the joint sealing operations, a final cleaning with compressed air shall be performed. The joints shall be filled from the bottom up to 1/8 inch below the pavement surface, plus or minus 1/16 inch. Excess or spilled sealant shall be removed from the pavement by approved methods and shall be discarded. The sealant shall be installed in such a manner as to prevent the formation of voids and entrapped air. In no case shall gravity methods or pouring pots be used to install the sealant material. Traffic shall not be permitted over newly sealed pavement until authorized by the Contracting Officer. When a primer is recommended by the manufacturer, it shall be applied evenly to the joint faces in accordance with the manufacturer's instructions. Joints shall be checked frequently to ensure that the newly installed sealant is cured to a tack-free condition within the time specified.

## 3.4 INSPECTION

### 3.4.1 Joint Cleaning

Joints shall be inspected during the cleaning process to correct improper equipment and cleaning techniques that damage the concrete pavement in any manner. Cleaned joints shall be approved prior to installation of the separating or back-up material and joint sealant.

3.4.2 Joint Sealant Application Equipment

The application equipment shall be inspected to ensure conformance to temperature requirements, proper proportioning and mixing (if two-component sealant) and proper installation. Evidences of bubbling, improper installation, failure to cure or set shall be cause to suspend operations until causes of the deficiencies are determined and corrected.

3.4.3 Joint Sealant

The joint sealant shall be inspected for proper rate of cure and set, bonding to the joint walls, cohesive separation within the sealant, reversion to liquid, entrapped air and voids. Sealants exhibiting any of these deficiencies at any time prior to the final acceptance of the project shall be removed from the joint, wasted, and replaced as specified herein at no additional cost to the Government.

3.5 CLEAN-UP

Upon completion of the project, all unused materials shall be removed from the site and the pavement shall be left in a clean condition.

-- End of Section --

SECTION TABLE OF CONTENTS

DIVISION 02 - SITE CONSTRUCTION

SECTION 02763A

PAVEMENT MARKINGS

**04/01**

PART 1 GENERAL

1.1 SUMMARY
1.2 REFERENCES
1.3 SUBMITTALS
1.4 DELIVERY AND STORAGE
1.5 EQUIPMENT
1.5.1 Paint Application Equipment
1.5.2 Reflective Media Dispenser
1.5.3 Surface Preparation Equipment
1.5.3.1 Sandblasting Equipment
1.5.3.2 Waterblast Equipment
1.5.4 Marking Removal Equipment
1.6 HAND-OPERATED, PUSH-TYPE MACHINES
1.7 MAINTENANCE OF TRAFFIC
1.7.1 Airfield
1.7.2 Roads, Streets, and Parking Areas
1.8 WEATHER LIMITATIONS FOR REMOVAL

PART 2 PRODUCTS

2.1 PAINT
2.2 REFLECTIVE MEDIA
2.3 SAMPLING AND TESTING

PART 3 EXECUTION

3.1 SURFACE PREPARATION
3.1.1 Pretreatment for Early Painting
3.1.2 Cleaning Existing Pavement Markings
3.1.3 Cleaning Concrete Curing Compounds
3.2 APPLICATION
3.2.1 Paint
3.2.1.1 Rate of Application
3.2.1.2 Drying
3.2.2 Reflective Media
3.3 MARKING REMOVAL
3.3.1 Equipment Operation
3.3.2 Cleanup and Waste Disposal

-- End of Section Table of Contents --

SECTION 02763A

PAVEMENT MARKINGS
**04/01**

PART 1 GENERAL
1.1 SUMMARY

Work under this section is generally limited to placement and removal of pavement markings for temporarily relocated taxiways, and restoration of pavement markings damaged or removed by pavement demolition for fuel line construction or other work performed under this contract.

1.2 REFERENCES

The publications listed below form a part of this specification to the extent referenced. The publications are referred to in the text by basic designation only.

AMERICAN ASSOCIATION OF STATE HIGHWAY AND TRANSPORTATION OFFICIALS (AASHTO)

| | |
|---|---|
| AASHTO M 247 | (1981; R 1996) Glass Beads Used in Traffic Paint |

U.S. GENERAL SERVICES ADMINISTRATION (GSA)

| | |
|---|---|
| FS TT-B-1325 | (Rev C; Notice 1; Canc. Notice 2) Beads (Glass Spheres) Retro-Reflective (Metric) |
| FS TT-P-1952 | (Rev D; Canc. Notice 1) Paint, Traffic and Airfield Marking, Waterborne (Metric) |
| FED-STD-595 | Colors |

1.3 SUBMITTALS

Government approval is required for submittals with a "G" designation; submittals not having a "G" designation are for information only. When used, a designation following the "G" designation identifies the office that will review the submittal for the Government. The following shall be submitted in accordance with Section 01330 SUBMITTAL PROCEDURES:

SD-03 Product Data

Equipment; G-AE

Lists of proposed equipment, including descriptive data, and notifications of proposed Contractor actions as specified in this section. List of removal equipment shall include descriptive data indicating area of coverage per pass, pressure adjustment range, tank and flow capacities, and safety precautions required for the equipment operation.

Composition Requirements; G-AE

Manufacturer's current printed product description and Material Safety Data Sheets (MSDS) for each type paint/color proposed for use.

Qualifications; G-AE

Document certifying that personnel are qualified for equipment operation and handling of chemicals.

SD-06 Test Reports

Sampling and Testing; G-AE

Certified copies of the test reports, prior to the use of the materials at the jobsite. Testing shall be performed in an approved independent laboratory.

SD-07 Certificates

Volatile Organic Compound (VOC); G-AE

Certificate stating that the proposed pavement marking paint meets the VOC regulations of the local Air Pollution Control District having jurisdiction over the geographical area in which the project is located.

## 1.4 DELIVERY AND STORAGE

All materials shall be delivered and stored in sealed containers that plainly show the designated name, formula or specification number, batch number, color, date of manufacture, manufacturer's name, and directions, all of which shall be plainly legible at time of use.

## 1.5 EQUIPMENT

All machines, tools and equipment used in the performance of the work shall be approved and maintained in satisfactory operating condition. Equipment operating on roads and runways shall display low speed traffic markings and traffic warning lights.

### 1.5.1 Paint Application Equipment

The equipment to apply paint to pavements shall be a self-propelled or mobile-drawn pneumatic spraying machine with suitable arrangements of atomizing nozzles and controls to obtain the specified results. The machine shall have a speed during application not less than 5 mph, and shall be capable of applying the stripe widths indicated, at the paint coverage rate specified in paragraph APPLICATION, and of even uniform thickness with clear-cut edges. The equipment used to apply the paint binder to airfield pavements shall be a self-propelled or mobile-drawn pneumatic spraying machine with an arrangement of atomizing nozzles capable of applying a line width at any one time in multiples of 6 inches, from 6 inches to 36 inches. The paint applicator shall have paint reservoirs or tanks of sufficient capacity and suitable gauges to apply paint in accordance with requirements specified. Tanks shall be equipped with suitable air-driven mechanical agitators. The spray mechanism shall be equipped with quick-action valves conveniently located, and shall include

necessary pressure regulators and gauges in full view and reach of the operator. Paint strainers shall be installed in paint supply lines to ensure freedom from residue and foreign matter that may cause malfunction of the spray guns. The paint applicator shall be readily adaptable for attachment of an air-actuated dispenser for the reflective media approved for use. Pneumatic spray guns shall be provided for hand application of paint in areas where the mobile paint applicator cannot be used.

1.5.2 Reflective Media Dispenser

The dispenser for applying the reflective media shall be attached to the paint dispenser and shall operate automatically and simultaneously with the applicator through the same control mechanism. The dispenser shall be capable of adjustment and designed to provide uniform flow of reflective media over the full length and width of the stripe at the rate of coverage specified in paragraph APPLICATION, at all operating speeds of the applicator to which it is attached.

1.5.3 Surface Preparation Equipment

1.5.3.1 Sandblasting Equipment

Sandblasting equipment shall include an air compressor, hoses, and nozzles of proper size and capacity as required for cleaning surfaces to be painted. The compressor shall be capable of furnishing not less than 150 cfm of air at a pressure of not less than 90 psi at each nozzle used, and shall be equipped with traps that will maintain the compressed air free of oil and water.

1.5.3.2 Waterblast Equipment

The water pressure shall be specified at 2600 psi at 140 degrees F in order to adequately clean the surfaces to be marked.

1.5.4 Marking Removal Equipment

Equipment shall be mounted on rubber tires and shall be capable of removing markings from the pavement without damaging the pavement surface or joint sealant. Waterblasting equipment shall be capable of producing an adjustable, pressurized stream of water. Sandblasting equipment shall include an air compressor, hoses, and nozzles. The compressor shall be equipped with traps to maintain the air free of oil and water.

1.6 HAND-OPERATED, PUSH-TYPE MACHINES

All machines, tools, and equipment used in performance of the work shall be approved and maintained in satisfactory operating condition. Hand-operated push-type machines of a type commonly used for application of paint to pavement surfaces will be acceptable for marking small roads and parking areas. Applicator machine shall be equipped with the necessary paint tanks and spraying nozzles, and shall be capable of applying paint uniformly at coverage specified. Sandblasting equipment shall be provided as required for cleaning surfaces to be painted. Hand-operated spray guns shall be provided for use in areas where push-type machines cannot be used.

## 1.7 MAINTENANCE OF TRAFFIC

### 1.7.1 Airfield

The performance of work in the controlled zones of airfields shall be coordinated with the Contracting Officer and with the Flight Operations Officer. Verbal communications shall be maintained with the control tower before and during work in the controlled zones of the airfield. The control tower shall be advised when the work is completed. A radio for this purpose shall be provided by the Contractor and approved by the Contracting Officer.

### 1.7.2 Roads, Streets, and Parking Areas

When traffic must be rerouted or controlled to accomplish the work, the necessary warning signs, flagpersons, and related equipment for the safe passage of vehicles shall be provided.

## 1.8 WEATHER LIMITATIONS FOR REMOVAL

Pavement surface shall be free of snow, ice, or slush. Surface temperature shall be at least 40 degrees F and rising at the beginning of operations, except those involving shot or sand blasting. Operation shall cease during thunderstorms. Operation shall cease during rainfall, except for waterblasting and removal of previously applied chemicals. Waterblasting shall cease where surface water accumulation alters the effectiveness of material removal.

# PART 2 PRODUCTS

## 2.1 PAINT

The paint shall be homogeneous, easily stirred to smooth consistency, and shall show no hard settlement or other objectionable characteristics during a storage period of 6 months. Paints for permanent marking of airfields, roads, and streets shall conform to FS TT-P-1952, color as indicated. Colors shall match Federal Standard FED-STD-595 color chip numbers as follows: 37925 (white), 33538 (yellow), and 33136 (red). Pavement marking paints shall comply with applicable state and local laws enacted to ensure compliance with Federal Clean Air Standards. Paint materials shall conform to the restrictions of the local Air Pollution Control District. Paint for temporary markings shall be a paint marking material that is specifically designed by the manufacturer to be temporary and removable such as Belpro 200 (white) and Belpro 202 (yellow)or an approve substitute. Apply at 10 mils dry film thickness. Remove with Belpro 93 remover gel and pressure washer as directed by the manufacturers instructions.

## 2.2 REFLECTIVE MEDIA

Reflective media for airfields shall conform to FS TT-B-1325, Type I, Gradation A. Reflective media for roads shall conform to FS TT-B-1325, Type I, Gradation A or AASHTO M 247, Type I.

## 2.3 SAMPLING AND TESTING

Materials proposed for use shall be stored on the project site in sealed and labeled containers, or segregated at source of supply, sufficiently in advance of needs to allow 60 days for testing. Upon notification by the Contractor that the material is at the site or source of supply, a sample

shall be taken by random selection from sealed containers by the Contractor in the presence of a representative of the Contracting Officer. Samples shall be clearly identified by designated name, specification number, batch number, manufacturer's formulation number, project contract number, intended use, and quantity involved. Testing shall be performed in an approved independent laboratory. If materials are approved based on reports furnished by the Contractor, samples will be retained by the Government for possible future testing should the material appear defective during or after application.

## PART 3 EXECUTION

### 3.1 SURFACE PREPARATION

Surfaces to be marked shall be thoroughly cleaned before application of the pavement marking material. Dust, dirt, and other granular surface deposits shall be removed by sweeping, blowing with compressed air, rinsing with water or a combination of these methods as required. Rubber deposits, surface laitance, existing paint markings, and other coatings adhering to the pavement shall be completely removed with scrapers, wire brushes, sandblasting, approved chemicals, or mechanical abrasion as directed. Areas of old pavement affected with oil or grease shall be scrubbed with several applications of trisodium phosphate solution or other approved detergent or degreaser, and rinsed thoroughly after each application. After cleaning, oil-soaked areas shall be sealed with cut shellac to prevent bleeding through the new paint. Pavement surfaces shall be allowed to dry, when water is used for cleaning, prior to striping or marking. Surfaces shall be recleaned, when work has been stopped due to rain.

#### 3.1.1 Pretreatment for Early Painting

Where early painting is required on rigid pavements, a pretreatment with an aqueous solution containing 3 percent phosphoric acid and 2 percent zinc chloride shall be applied to prepared pavement areas prior to painting.

#### 3.1.2 Cleaning Existing Pavement Markings

In general, markings shall not be placed over existing pavement marking patterns. Remove existing pavement markings as indicated on the project drawings. Existing pavement markings, which are in good condition but interfere or conflict with the newly applied marking patterns, shall be removed. Deteriorated or obscured markings that are not shown to be removed and are not misleading or confusing or interfere with the adhesion of the new marking material do not require removal. Whenever grinding, scraping, sandblasting or other operations are performed the work must be conducted in such a manner that the finished pavement surface is not damaged or left in a pattern that is misleading or confusing. When these operations are completed the pavement surface shall be swept to remove residue and debris resulting from the cleaning work.

#### 3.1.3 Cleaning Concrete Curing Compounds

On new Portland cement concrete pavements, cleaning operations shall not begin until a minimum of 30 days after the placement of concrete. All new concrete pavements shall be cleaned by either sandblasting or water blasting. The extent of the blasting work shall be to clean and prepare the concrete surface as follows:

a. There is no visible evidence of curing compound on the peaks of

the textured concrete surface.

b. There are no heavy puddled deposits of curing compound in the valleys of the textured concrete surface.

c. All remaining curing compound is intact; all loose and flaking material is removed.

d. The peaks of the textured pavement surface are rounded in profile and free of sharp edges and irregularities.

e. The surface to be marked is dry.

## 3.2 APPLICATION

All pavement markings and patterns shall be placed as shown on the plans.

### 3.2.1 Paint

Paint shall be applied to clean, dry surfaces, and only when air and pavement temperatures are above 40 degrees F and less than 95 degrees F. Paint temperature shall be maintained within these same limits. New asphalt pavement surfaces and new Portland concrete cement shall be allowed to cure for a period of not less than 30 days before applications of paint. Paint shall be applied pneumatically with approved equipment at rate of coverage specified . The Contractor shall provide guide lines and templates as necessary to control paint application. Special precautions shall be taken in marking numbers, letters, and symbols. Edges of markings shall be sharply outlined.

#### 3.2.1.1 Rate of Application

a. Reflective Markings: Pigmented binder shall be applied evenly to the pavement area to be coated at a rate of 105 plus or minus 5 square feet per gallon. Glass spheres shall be applied uniformly to the wet paint on airfield pavement at a rate of 8 and on roads and POL pavement at a rate of 6 plus or minus 0.5 pounds of glass spheres per gallon of paint.

b. Nonreflective Markings: Paint shall be applied evenly to the pavement surface to be coated at a rate of 105 plus or minus 5 square feet per gallon.

#### 3.2.1.2 Drying

The maximum drying time requirements of the paint specifications will be strictly enforced to prevent undue softening of bitumen, and pickup, displacement, or discoloration by tires of traffic. If there is a delay in drying of the markings, painting operations shall be discontinued until cause of the slow drying is determined and corrected.

### 3.2.2 Reflective Media

Application of reflective media shall immediately follow application of pigmented binder. Drop-on application of glass spheres shall be accomplished to insure that reflective media is evenly distributed at the specified rate of coverage. Should there be malfunction of either paint applicator or reflective media dispenser, operations shall be discontinued immediately until deficiency is corrected.

## 3.3 MARKING REMOVAL

Pavement marking, shall be removed in the areas shown on the drawings. Removal of marking shall be as complete as possible without damage to the surface. Aggregate shall not be exposed by the removal process. After the markings are removed, the cleaned pavement surfaces shall exhibit adequate texture for remarking as specified in paragraph SURFACE PREPARATION. Contractor shall demonstrate removal of pavement marking in an area designated by the Contracting Officer. The demonstration area will become the standard for the remainder of the work.

### 3.3.1 Equipment Operation

Equipment shall be controlled and operated to remove markings from the pavement surface, prevent dilution or removal of binder from underlying pavement, and prevent emission of blue smoke from asphalt or tar surfaces.

### 3.3.2 Cleanup and Waste Disposal

The worksite shall be kept clean of debris and waste from the removal operations. Cleanup shall immediately follow removal operations in areas subject to air traffic. Debris shall be disposed of at approved sites.

-- End of Section --

SECTION TABLE OF CONTENTS

DIVISION 02 - SITE CONSTRUCTION

SECTION 02821A

FENCING

**02/02**

PART 1 GENERAL

1.1 REFERENCES
1.2 SUBMITTALS

PART 2 PRODUCTS

2.1 FENCE FABRIC
2.1.1 Chain Link Fence Fabric
2.2 GATES
2.3 POSTS
2.3.1 Metal Posts for Chain Link Fence
2.4 BRACES AND RAILS
2.5 WIRE
2.5.1 Tension Wire
2.6 ACCESSORIES
2.7 CONCRETE

PART 3 EXECUTION

3.1 INSTALLATION
3.2 EXCAVATION
3.3 POST INSTALLATION
3.3.1 Posts for Chain Link Fence
3.4 RAILS
3.4.1 Top Rail
3.5 BRACES AND TRUSS RODS
3.6 TENSION WIRES
3.7 CHAIN LINK FABRIC
3.8 BARBED WIRE SUPPORTING ARMS AND BARBED WIRE
3.8.1 General Requirements
3.9 GATE INSTALLATION
3.10 GROUNDING

-- End of Section Table of Contents --

SECTION 02821A

FENCING
**02/02**

PART 1 GENERAL

1.1 REFERENCES

The publications listed below form a part of this specification to the extent referenced. The publications are referred to in the text by basic designation only.

AMERICAN SOCIETY FOR TESTING AND MATERIALS (ASTM)

| | |
|---|---|
| ASTM A 121 | (1999) Zinc-Coated (Galvanized) Steel Barbed Wire |
| ASTM A 153/A 153M | (2001) Zinc Coating (Hot-Dip) on Iron and Steel Hardware |
| ASTM A 392 | (1996) Zinc-Coated Steel Chain-Link Fence Fabric |
| ASTM A 491 | (1996) Aluminum-Coated Steel Chain-Link Fence Fabric |
| ASTM A 585 | (1997) Aluminum-Coated Steel Barbed Wire |
| ASTM A 780 | (2000) Repair of Damaged and Uncoated Areas of Hot-Dipped Galvanized Coatings |
| ASTM A 824 | (1995) Metallic-Coated Steel Marcelled Tension Wire for Use With Chain Link Fence |
| ASTM C 94/C 94M | (2000e2) Specification for Ready-Mixed Concrete |
| ASTM F 1043 | (2000) Strength and Protective Coatings on Metal Industrial Chain-Link Fence Framework |
| ASTM F 1083 | (1997) Specification for Pipe, Steel, Hot-Dipped Zinc-Coated (Galvanized) Welded, for Fence Structures |
| ASTM F 1184 | (1994) Industrial and Commercial Horizontal Slide Gates |
| ASTM F 626 | (1996a) Fence Fittings |
| ASTM F 900 | (1994) Industrial and Commercial Swing Gates |

1.2 SUBMITTALS

Government approval is required for submittals with a "G" designation;

submittals not having a "G" designation are for information only. When used, a designation following the "G" designation identifies the office that will review the submittal for the Government. The following shall be submitted in accordance with Section 01330 SUBMITTAL PROCEDURES:

SD-07 Certificates

Chain Link Fence; G-AE

Statement, signed by an official authorized to certify on behalf of the manufacturer, attesting that the chain link fence and component materials meet the specified requirements.

PART 2 PRODUCTS

2.1 FENCE FABRIC

Fence fabric shall conform to the following:

2.1.1 Chain Link Fence Fabric

ASTM A 392, Class 2, zinc-coated steel wire with minimum coating weight of 1.2 ounces of zinc per square foot of coated surface, or ASTM A 491, Type I, aluminum-coated steel wire. Fabric shall be fabricated of 9 gauge wire woven in 2 inch mesh. Fabric height shall be 6 feet. Fabric shall be twisted and barbed on the top selvage and knuckled on the bottom selvage.

2.2 GATES

ASTM F 900 and/or ASTM F 1184. Gate shall be the type and swing shown. Gate frames shall conform to strength and coating requirements of ASTM F 1083 for Group IA, steel pipe, with external coating Type A, nominal pipe size (NPS) 1-1/2. Gate frames shall conform to strength and coating requirements of ASTM F 1043, for Group IC, steel pipe with external coating Type A or Type B, nominal pipe size (NPS) 1-1/2. Gate fabric shall be as specified for chain link fabric. Gate leaves more than 8 feet wide shall have either intermediate members and diagonal truss rods or shall have tubular members as necessary to provide rigid construction, free from sag or twist. Gate leaves less than 8 feet wide shall have truss rods or intermediate braces. Gate fabric shall be attached to the gate frame by method standard with the manufacturer except that welding will not be permitted. Latches, hinges, stops, keepers, rollers, and other hardware items shall be furnished as required for the operation of the gate. Latches shall be arranged for padlocking so that the padlock will be accessible from both sides of the gate. Stops shall be provided for holding the gates in the open position. For high security applications, each end member of gate frames shall be extended sufficiently above the top member to carry three strands of barbed wire in horizontal alignment with barbed wire strands on the fence.

2.3 POSTS

2.3.1 Metal Posts for Chain Link Fence

ASTM F 1083, zinc-coated. Group IA, with external coating Type A steel pipe. Group IC steel pipe, zinc-coated with external coating Type A or Type B and Group II , roll-formed steel sections, shall meet the strength and coating requirements of ASTM F 1043. Group III, ASTM F 1043 steel H-section may be used for line posts in lieu of line post shapes specified

for the other classes. Sizes shall be as shown on the drawings. Line posts and terminal (corner, gate, and pull) posts selected shall be of the same designation throughout the fence. Gate post shall be for the gate type specified subject to the limitation specified in ASTM F 900 and/or ASTM F 1184.

## 2.4 BRACES AND RAILS

ASTM F 1083, zinc-coated, Group IA, steel pipe, size NPS 1-1/4. Group IC steel pipe, zinc-coated, shall meet the strength and coating requirements of ASTM F 1043. Group II, formed steel sections, size 1-21/32 inch, conforming to ASTM F 1043, may be used as braces and rails if Group II line posts are furnished.

## 2.5 WIRE

### 2.5.1 Tension Wire

Tension wire shall be Type I or Type II, Class 2 coating, in accordance with ASTM A 824.

## 2.6 ACCESSORIES

ASTM F 626. Ferrous accessories shall be zinc or aluminum coated. Truss rods shall be furnished for each terminal post. Truss rods shall be provided with turnbuckles or other equivalent provisions for adjustment. Barbed wire shall be 2 strand, 12-1/2 gauge wire, zinc-coated, Class 3 in accordance with ASTM A 121 or aluminum coated Type I in accordance with ASTM A 585. Barbed wire shall be four-point barbed type steel wire with barbs spaced no more than 6 inches appart. Barbed wire support arms shall be the single arm type and of the design required for the post furnished. Tie wire for attaching fabric to rails, braces, and posts shall be 9 gauge steel wire and match the coating of the fence fabric. Tie wires for attaching fabric to tension wire on high security fences shall be 16 gage stainless steel. The tie wires shall be a double loop and 6.5 inches in length. Miscellaneous hardware coatings shall conform to ASTM A 153/A 153M unless modified.

## 2.7 CONCRETE

ASTM C 94/C 94M, using 3/4 inch maximum size aggregate, and having minimum compressive strength of 3000 psi at 28 days. Grout shall consist of one part portland cement to three parts clean, well-graded sand and the minimum amount of water to produce a workable mix.

# PART 3 EXECUTION

## 3.1 INSTALLATION

Fence shall be installed to the lines and grades indicated. The area on either side of the fence line shall be cleared to the extent indicated. Line posts shall be spaced equidistant at intervals not exceeding 10 feet. Terminal (corner, gate, and pull) posts shall be set at abrupt changes in vertical and horizontal alignment. Fabric shall be continuous between terminal posts; however, runs between terminal posts shall not exceed 500 feet. Any damage to galvanized surfaces, including welding, shall be repaired with paint containing zinc dust in accordance with ASTM A 780.

## 3.2 EXCAVATION

Post holes shall be cleared of loose material. Waste material shall be spread where directed. The ground surface irregularities along the fence line shall be eliminated to the extent necessary to maintain a 2 inch clearance between the bottom of the fabric and finish grade.

## 3.3 POST INSTALLATION

### 3.3.1 Posts for Chain Link Fence

Posts shall be set plumb and in alignment. Except where solid rock is encountered, posts shall be set in concrete to the depth indicated on the drawings. Where solid rock is encountered with no overburden, posts shall be set to a minimum depth of 18 inches in rock. Where solid rock is covered with an overburden of soil or loose rock, posts shall be set to the minimum depth indicated on the drawing unless a penetration of 18 inches in solid rock is achieved before reaching the indicated depth, in which case depth of penetration shall terminate. All portions of posts set in rock shall be grouted. Portions of posts not set in rock shall be set in concrete from the rock to ground level. Posts set in concrete shall be set in holes not less than the diameter shown on the drawings. Diameters of holes in solid rock shall be at least 1 inch greater than the largest cross section of the post. Concrete and grout shall be thoroughly consolidated around each post, shall be free of voids and finished to form a dome. Concrete and grout shall be allowed to cure for 72 hours prior to attachment of any item to the posts. Group II line posts may be mechanically driven, for temporary fence construction only, if rock is not encountered. Driven posts shall be set to a minimum depth of 3 feet and shall be protected with drive caps when being set.

## 3.4 RAILS

### 3.4.1 Top Rail

Top rail shall be supported at each post to form a continuous brace between terminal posts. Where required, sections of top rail shall be joined using sleeves or couplings that will allow expansion or contraction of the rail. Top rail, if required for high security fence, shall be installed as indicated on the drawings.

## 3.5 BRACES AND TRUSS RODS

Braces and truss rods shall be installed as indicated and in conformance with the standard practice for the fence furnished. Horizontal (compression) braces and diagonal truss (tension) rods shall be installed on fences over 6 feet in height. A center brace or 2 diagonal truss rods shall be installed on 12 foot fences. Braces and truss rods shall extend from terminal posts to line posts. Diagonal braces shall form an angle of approximately 40 to 50 degrees with the horizontal. No bracing is required on fences 6 feet high or less if a top rail is installed.

## 3.6 TENSION WIRES

Tension wires shall be installed along the bottom of the fence line and attached to the terminal posts of each stretch of the fence. Bottom tension wire shall be installed within the bottom 6 inches of the installed fabric. Tension wire shall be pulled taut and shall be free of sag.

## 3.7 CHAIN LINK FABRIC

Chain link fabric shall be installed on the side of the post indicated. Fabric shall be attached to terminal posts with stretcher bars and tension bands. Bands shall be spaced at approximately 15 inch intervals. The fabric shall be installed and pulled taut to provide a smooth and uniform appearance free from sag, without permanently distorting the fabric diamond or reducing the fabric height. Fabric shall be fastened to line posts at approximately 15 inch intervals and fastened to all rails and tension wires at approximately 24 inch intervals. Fabric shall be cut by untwisting and removing pickets. Splicing shall be accomplished by weaving a single picket into the ends of the rolls to be joined. The bottom of the installed fabric shall be 2 plus or minus 1/2 inch above the ground.

## 3.8 BARBED WIRE SUPPORTING ARMS AND BARBED WIRE

### 3.8.1 General Requirements

Barbed wire supporting arms and barbed wire shall be installed as indicated and as recommended by the manufacturer. Supporting arms shall be anchored to the posts in a manner to prevent easy removal with hand tools with 3/8 inch diameter plain pin rivets or, at the Contractor's option, with studs driven by low-velocity explosive-actuated tools for steel, wrought iron, ductile iron, or malleable iron. Studs driven by an explosive-actuated tool shall not be used with gray iron or other material that can be fractured. A minimum of two studs per support arm shall be used. Barbed wire shall be pulled taut and attached to the arms with clips or other means that will prevent easy removal.

## 3.9 GATE INSTALLATION

Gates shall be installed at the locations shown. Hinged gates shall be mounted to swing as indicated. Latches, stops, and keepers shall be installed as required. Padlocks shall be attached to gates or gate posts with chains. Hinge pins, and hardware shall be welded or otherwise secured to prevent removal.

## 3.10 GROUNDING

Fences shall be grounded on each side of all gates, at each corner, at the closest approach to each building located within 50 feet of the fence, and where the fence alignment changes more than 15 degrees. Grounding locations shall not exceed 650 feet. Each gate panel shall be bonded with a flexible bond strap to its gate post. Ground conductor shall consist of No. 8 AWG solid copper wire. Grounding electrodes shall be 3/4 inch by 10 foot long copper-clad steel rod. Electrodes shall be driven into the earth so that the top of the electrode is at least 6 inches below the grade. Where driving is impracticable, electrodes shall be buried a minimum of 12 inches deep and radially from the fence. The top of the electrode shall be not less than 2 feet or more than 8 feet from the fence. Ground conductor shall be clamped to the fence and electrodes with bronze grounding clamps to create electrical continuity between fence posts, fence fabric, and ground rods. After installation the total resistance of fence to ground shall not be greater than 25 ohms.

-- End of Section --

SECTION TABLE OF CONTENTS

DIVISION 02 - SITE CONSTRUCTION

SECTION 02921A

SEEDING

**11/02**

PART 1 GENERAL

1.1 REFERENCES
1.2 SUBMITTALS
1.3 SOURCE INSPECTION
1.4 DELIVERY, INSPECTION, STORAGE, AND HANDLING
1.4.1 Delivery
1.4.1.1 Delivered Topsoil
1.4.1.2 Soil Amendments
1.4.2 Inspection
1.4.3 Storage
1.4.4 Handling
1.4.5 Time Limitation

PART 2 PRODUCTS

2.1 SEED
2.1.1 Seed Classification
2.1.2 Permanent Seed Species and Mixtures
2.1.3 Temporary Seed Species
2.1.4 Quality
2.1.5 Seed Mixing
2.1.6 Substitutions
2.2 TOPSOIL
2.3 SOIL AMENDMENTS
2.3.1 Fertilizer
2.4 MULCH
2.4.1 Wood Cellulose Fiber
2.4.2 Paper Fiber
2.5 ASPHALT ADHESIVE
2.6 WATER

PART 3 EXECUTION

3.1 INSTALLING SEED TIME AND CONDITIONS
3.1.1 Seeding Time
3.1.2 Seeding Conditions
3.1.3 Equipment Calibration
3.2 SITE PREPARATION
3.2.1 Finished Grade and Topsoil
3.2.2 Application of Soil Amendments
3.2.2.1 Applying Fertilizer
3.2.3 Tillage
3.2.4 Prepared Surface
3.2.4.1 Preparation
3.2.4.2 Lawn Area Debris

3.2.4.3 Field Area Debris
3.2.4.4 Protection
3.3 INSTALLATION
3.3.1 Installing Seed
3.3.2 Hydroseeding
3.3.3 Mulching
3.3.3.1 Wood Cellulose Fiber, Paper Fiber, and Recycled Paper
3.3.4 Watering Seed
3.4 SURFACE EROSION CONTROL
3.4.1 Temporary Seeding
3.4.1.1 Soil Amendments
3.4.1.2 Remaining Soil Amendments
3.5 QUANTITY CHECK
3.6 RESTORATION AND CLEAN UP
3.6.1 Restoration
3.6.2 Clean Up
3.7 PROTECTION OF INSTALLED AREAS
3.8 SEED ESTABLISHMENT PERIOD
3.8.1 Commencement
3.8.2 Satisfactory Stand of Grass Plants
3.8.2.1 Lawn Area
3.8.2.2 Field Area
3.8.3 Maintenance During Establishment Period
3.8.3.1 Mowing
3.8.3.2 Repair of Reinstall
3.8.3.3 Maintenance Record

-- End of Section Table of Contents --

SECTION 02921A

SEEDING
**11/02**

PART 1 GENERAL

1.1 REFERENCES

The publications listed below form a part of this specification to the extent referenced. The publications are referred to in the text by basic designation only.

AMERICAN SOCIETY FOR TESTING AND MATERIALS (ASTM)

| | |
|---|---|
| ASTM D 2028 | (1976; R 1997) Specification for Cutback Asphalt (Rapid-Curing Type) |
| ASTM D 5268 | (1992; R 1996) Topsoil Used for Landscaping Purposes |
| ASTM D 977 | (1998) Specification for Emulsified Asphalt |

U.S. DEPARTMENT OF AGRICULTURE (USDA)

| | |
|---|---|
| AMS Seed Act | (1995) Federal Seed Act Regulations Part 201 |

1.2 SUBMITTALS

Government approval is required for submittals with a "G" designation; submittals not having a "G" designation are for information only. When used, a designation following the "G" designation identifies the office that will review the submittal for the Government. The following shall be submitted in accordance with Section 01330 SUBMITTAL PROCEDURES:

SD-03 Product Data

Seed, Mulch & Fertilizer; G-AE

Manufacturer's literature including physical characteristics, application and installation instructions for equipment, surface erosion control material and chemical treatment material.

A listing of equipment to be used for the seeding operation.

Delivery; G

Delivery schedule.

Finished Grade and Topsoil; G

Finished grade status.

Topsoil; G

Availability of topsoil from the stripping and stock piling operation.

Quantity Check; G

Bag count or bulk weight measurements of material used compared with area covered to determine the application rate and quantity installed.

Seed Establishment Period; G

Calendar time period for the seed establishment period. When there is more than one seed establishment period, the boundaries of the seeded area covered for each period shall be described.

Maintenance Record; G

Maintenance work performed, area repaired or reinstalled, diagnosis for unsatisfactory stand of grass plants.

SD-06 Test Reports

Equipment Calibration; G

Certification of calibration tests conducted on the equipment used in the seeding operation.

SD-07 Certificates

Seed; G
Fertilizer; G
Mulch; G
Asphalt Adhesive; G

Prior to the delivery of materials, certificates of compliance attesting that materials meet the specified requirements. Certified copies of the material certificates shall include the following:

a. Seed. Classification, botanical name, common name, percent pure live seed, minimum percent germination and hard seed, maximum percent weed seed content, and date tested.

b. Fertilizer. Chemical analysis and composition percent.

e. Mulch: Composition and source.

h. Asphalt Adhesive: Composition.

## 1.3 SOURCE INSPECTION

The source of delivered topsoil shall be subject to inspection.

## 1.4 DELIVERY, INSPECTION, STORAGE, AND HANDLING

### 1.4.1 Delivery

A delivery schedule shall be provided at least 10 calendar days prior to the first day of delivery.

#### 1.4.1.1 Delivered Topsoil

Prior to the delivery of any topsoil, its availability shall be verified in paragraph TOPSOIL. A soil test shall be provided for topsoil delivered to the site.

#### 1.4.1.2 Soil Amendments

Soil amendments shall be delivered to the site in the original, unopened containers bearing the manufacturer's chemical analysis. In lieu of containers, soil amendments may be furnished in bulk. A chemical analysis shall be provided for bulk deliveries.

### 1.4.2 Inspection

Seed shall be inspected upon arrival at the job site for conformity to species and quality. Seed that is wet, moldy, or bears a test date five months or older, shall be rejected. Other materials shall be inspected for compliance with specified requirements. The following shall be rejected: open soil amendment containers or wet soil amendments; topsoil that contains slag, cinders, stones, lumps of soil, sticks, roots, trash or other material over a minimum 1-1/2 inch diameter; and topsoil that contains viable plants and plant parts. Unacceptable materials shall be removed from the job site.

### 1.4.3 Storage

Materials shall be stored in designated areas. Seed and fertilizer shall be stored in cool, dry locations away from contaminants.

### 1.4.4 Handling

Except for bulk deliveries, materials shall not be dropped or dumped from vehicles.

### 1.4.5 Time Limitation

Hydroseeding time limitation for holding seed in the slurry shall be a maximum 24 hours.

# PART 2 PRODUCTS

## 2.1 SEED

### 2.1.1 Seed Classification

State-approved seed of the latest season's crop shall be provided in original sealed packages bearing the producer's guaranteed analysis for percentages of mixture, purity, germination, hard seed, weed seed content, and inert material. Labels shall be in conformance with AMS Seed Act and applicable state seed laws. The class of seed for each seed type specified shall be specifically developed and recommended by the seed producer for

use in domestic or commercial "Lawn" applications.

2.1.2 Permanent Seed Species and Mixtures

Permanent seed species and mixtures shall be proportioned by weight as follows:

| Botanical Name | Common Name | Mixture Percent by Weight | Percent Pure Live Seed | Minimum Seed Germination |
|---|---|---|---|---|
| Cynodon Dactylon | Bermuda Grass | 90% | 98% | 85% |
| Lolium Perenne | Perennial Rye | 10% | 98% | 85% |

2.1.3 Temporary Seed Species

Temporary seed species for surface erosion control or overseeding shall be as follows:

| Botanical Name | Common Name | Mixture Percent by Weight | Percent Pure Live Seed | Minimum Seed Germination |
|---|---|---|---|---|
| Lolium Annum | Annual Rye | 100% | 98% | 85% |

2.1.4 Quality

Weed seed shall be a maximum 1 percent by weight of the total mixture.

2.1.5 Seed Mixing

The mixing of seed may be done by the seed supplier prior to delivery, or on site as directed.

2.1.6 Substitutions

Substitutions will not be allowed without written request and approval from the Contracting Officer.

2.2 TOPSOIL

Topsoil shall be as defined in ASTM D 5268. When available, the topsoil shall be the existing surface soil stripped and stockpiled onsite in accordance with Section 02300A EARTHWORK. When additional topsoil is required beyond the available topsoil from the stripping operation, topsoil shall be delivered and amended as recommended by the soil test for the seed specified. Topsoil shall be free from slag, cinders, stones, lumps of soil, sticks, roots, trash or other material over a minimum 1-1/2 inch diameter. Topsoil shall be free from viable plants and plant parts.

2.3 SOIL AMENDMENTS

Soil amendments shall consist of fertilizer meeting the following requirements.

2.3.1 Fertilizer

The nutrients ratio shall be 13 percent nitrogen, 13 percent phosphorus, and 13 percent potassium. Fertilizer shall be controlled release commercial grade, free flowing, uniform in composition, and consist of a nitrogen-phosphorus-potassium ratio. The fertilizer shall be derived from sulphur coated urea, urea formaldehyde, plastic or polymer coated pills, or isobutylenediurea (IBDU). Fertilizer shall be balanced with the inclusion of trace minerals and micro-nutrients.

2.4 MULCH

Mulch shall be free from weeds, mold, and other deleterious materials. Mulch materials shall be native to the region.

2.4.1 Wood Cellulose Fiber

Wood cellulose fiber shall not contain any growth or germination-inhibiting factors and shall be dyed an appropriate color to facilitate placement during application. Composition on air-dry weight basis: 9 to 15 percent moisture, pH range from 4.5 to 6.0.

2.4.2 Paper Fiber

Paper fiber mulch shall be recycled news print that is shredded for the purpose of mulching seed.

2.5 ASPHALT ADHESIVE

Asphalt adhesive shall conform to the following: Emulsified asphalt, conforming to ASTM D 977, Grade SS-1; and cutback asphalt, conforming to ASTM D 2028, Designation RC-70.

2.6 WATER

Water shall be the responsibility of the Contractor, unless otherwise noted. Water shall not contain elements toxic to plant life.

PART 3 EXECUTION

3.1 INSTALLING SEED TIME AND CONDITIONS

3.1.1 Seeding Time

Seed shall be installed from March 1 to May 15th for spring establishment; and from September 1 to October 15 for fall establishment.

3.1.2 Seeding Conditions

Seeding operations shall be performed only during periods when beneficial results can be obtained. When drought, excessive moisture, or other unsatisfactory conditions prevail, the work shall be stopped when directed. When special conditions warrant a variance to the seeding operations, proposed alternate times shall be submitted for approval.

3.1.3 Equipment Calibration

Immediately prior to the commencement of seeding operations, calibration tests shall be conducted on the equipment to be used. These tests shall

confirm that the equipment is operating within the manufacturer's specifications and will meet the specified criteria. The equipment shall be calibrated a minimum of once every day during the operation. The calibration test results shall be provided within 1 week of testing.

## 3.2 SITE PREPARATION

### 3.2.1 Finished Grade and Topsoil

The Contractor shall verify that finished grades are as indicated on drawings, and the placing of topsoil, smooth grading, and compaction requirements have been completed in accordance with Section 02300A EARTHWORK, prior to the commencement of the seeding operation.

### 3.2.2 Application of Soil Amendments

#### 3.2.2.1 Applying Fertilizer

The application rate shall be 125 pounds per 1000 square yards (600 pounds per acre). Fertilizer shall be incorporated into the soil to a maximum 4 inch depth or may be incorporated as part of the tillage or hydroseeding operation.

### 3.2.3 Tillage

Soil on slopes up to a maximum 3-horizontal-to-1-vertical shall be tilled to a minimum 4 inch depth. On slopes between 3-horizontal-to-1-vertical and 1-horizontal-to-1 vertical, the soil shall be tilled to a minimum 2 inch depth by scarifying with heavy rakes, or other method. Rototillers shall be used where soil conditions and length of slope permit. On slopes 1-horizontal-to-1 vertical and steeper, no tillage is required. Drainage patterns shall be maintained as indicated on drawings. Areas compacted by construction operations shall be completely pulverized by tillage. Soil used for repair of surface erosion or grade deficiencies shall conform to topsoil requirements. The pH adjuster, fertilizer, and soil conditioner may be applied during this procedure.

### 3.2.4 Prepared Surface

#### 3.2.4.1 Preparation

The prepared surface shall be a maximum 1 inch below the adjoining grade of any surfaced area. New surfaces shall be blended to existing areas. The prepared surface shall be completed with a light raking to remove debris.

#### 3.2.4.2 Lawn Area Debris

Debris and stones over a minimum 5/8 inch in any dimension shall be removed from the surface.

#### 3.2.4.3 Field Area Debris

Debris and stones over a minimum 3 inch in any dimension shall be removed from the surface.

#### 3.2.4.4 Protection

Areas with the prepared surface shall be protected from compaction or

damage by vehicular or pedestrian traffic and surface erosion.

## 3.3 INSTALLATION

Prior to installing seed, any previously prepared surface compacted or damaged shall be reworked to meet the requirements of paragraph SITE PREPARATION. Seeding operations shall not take place when the wind velocity will prevent uniform seed distribution.

### 3.3.1 Installing Seed

Seeding method shall be Hydroseeding. Seeding procedure shall ensure even coverage. Gravity feed applicators, which drop seed directly from a hopper onto the prepared soil, shall not be used because of the difficulty in achieving even coverage, unless otherwise approved. Absorbent polymer powder shall be mixed with the dry seed at the rate recommended by the manufacturer.

### 3.3.2 Hydroseeding

Seed shall be mixed to ensure broadcast at the rate of 1.5 pounds per 1000 square feet. Seed and fertilizer shall be added to water and thoroughly mixed to meet the rates specified. The time period for the seed to be held in the slurry shall be a maximum 24 hours. Wood cellulose fiber mulch and tackifier shall be added at the rates recommended by the manufacturer after the seed, fertilizer, and water have been thoroughly mixed to produce a homogeneous slurry. Slurry shall be uniformly applied under pressure over the entire area. The hydroseeded area shall not be rolled.

### 3.3.3 Mulching

#### 3.3.3.1 Wood Cellulose Fiber, Paper Fiber, and Recycled Paper

Wood cellulose fiber, paper fiber, or recycled paper shall be applied as part of the hydroseeding operation. The mulch shall be mixed and applied in accordance with the manufacturer's recommendations.

### 3.3.4 Watering Seed

Watering shall be started immediately after completing the seeding of an area. Water shall be applied to supplement rainfall at a rate sufficient to ensure moist soil conditions to a minimum 1 inch depth. Run-off and puddling shall be prevented. Watering trucks shall not be driven over turf areas, unless otherwise directed. Watering of other adjacent areas or plant material shall be prevented.

## 3.4 SURFACE EROSION CONTROL

### 3.4.1 Temporary Seeding

The application rate shall be 2 pounds per 1000 square feet. When directed during contract delays affecting the seeding operation or when a quick cover is required to prevent surface erosion, the areas designated shall be seeded in accordance with temporary seed species listed under Paragraph SEED.

#### 3.4.1.1 Soil Amendments

When soil amendments have not been applied to the area, the quantity of 1/2 of the required soil amendments shall be applied and the area tilled in

accordance with paragraph SITE PREPARATION. The area shall be watered in accordance with paragraph Watering Seed.

3.4.1.2 Remaining Soil Amendments

The remaining soil amendments shall be applied in accordance with the paragraph Tillage when the surface is prepared for installing seed.

3.5 QUANTITY CHECK

For materials provided in bags, the empty bags shall be retained for recording the amount used. For materials provided in bulk, the weight certificates shall be retained as a record of the amount used. The amount of material used shall be compared with the total area covered to determine the rate of application used. Differences between the quantity applied and the quantity specified shall be adjusted as directed.

3.6 RESTORATION AND CLEAN UP

3.6.1 Restoration

Existing turf areas, pavements, and facilities that have been damaged from the seeding operation shall be restored to original condition at Contractor's expense.

3.6.2 Clean Up

Excess and waste material shall be removed from the seeded areas and shall be disposed offsite. Adjacent paved areas shall be cleaned.

3.7 PROTECTION OF INSTALLED AREAS

Immediately upon completion of the seeding operation in an area, the area shall be protected against traffic or other use by erecting barricades and providing signage as indicated, required, or as directed.

3.8 SEED ESTABLISHMENT PERIOD

3.8.1 Commencement

The seed establishment period to obtain a healthy stand of grass plants shall begin on the first day of seeding work under this contract and shall continue through the remaining life of the contract and end 3 months after the last day of the seeding operation required by this contract. The seed establishment period shall be modified for inclement weather, shut down periods, or for separate completion dates of areas.

3.8.2 Satisfactory Stand of Grass Plants

Grass plants shall be evaluated for species and health when the grass plants are a minimum 1 inch high.

3.8.2.1 Lawn Area

A satisfactory stand of grass plants from the seeding operation for a lawn area shall be a minimum 100 grass plants per square foot. Bare spots shall be a maximum 6 inches square. The total bare spots shall be a maximum 2 percent of the total seeded area. All disturbed landside (non-airside) areas shall be considered Lawn Areas.

3.8.2.2 Field Area

A satisfactory stand of grass plants from the seeding operation for a field area shall be a minimum 100 grass plants per square foot. The total bare spots shall not exceed 2 percent of the total seeded area. All disturbed airside areas shall be considered Field Areas.

3.8.3 Maintenance During Establishment Period

Maintenance of the seeded areas shall include eradicating weeds, insects and diseases; protecting embankments and ditches from surface erosion; maintaining erosion control materials and mulch; protecting installed areas from traffic; mowing; and watering.

3.8.3.1 Mowing

a. Lawn Areas: Lawn areas shall be mowed to a minimum 3 inch height when the turf is a maximum 4 inches high. Clippings shall be removed when the amount cut prevents sunlight from reaching the ground surface.

b. Field Areas: Field areas shall be mowed once during the season to a minimum 3 inch height. Clippings shall be removed when the amount cut prevents sunlight from reaching the ground surface.

3.8.3.2 Repair of Reinstall

Unsatisfactory stand of grass plants and mulch shall be repaired or reinstalled, and eroded areas shall be repaired in accordance with paragraph SITE PREPARATION.

3.8.3.3 Maintenance Record

A record of each site visit shall be furnished, describing the maintenance work performed; areas repaired or reinstalled; and diagnosis for unsatisfactory stand of grass plants.

-- End of Section --

SECTION TABLE OF CONTENTS

DIVISION 03 - CONCRETE

SECTION 03100A

STRUCTURAL CONCRETE FORMWORK

**05/98**

PART 1 GENERAL

1.1 REFERENCES
1.2 DESIGN
1.3 STORAGE AND HANDLING

PART 2 PRODUCTS

2.1 FORM MATERIALS
2.1.1 Forms For Class B Finish
2.1.2 Forms For Class C Finish
2.1.3 Forms For Class D Finish
2.1.4 Form Ties
2.1.5 Form Releasing Agents
2.1.6 Fiber Voids
2.2 FIBER VOID RETAINERS
2.2.1 Polystyrene Rigid Insulation
2.2.2 Precast Concrete

PART 3 EXECUTION

3.1 INSTALLATION
3.1.1 Formwork
3.1.2 Fiber Voids
3.1.3 Fiber Void Retainers
3.2 CHAMFERING
3.3 COATING
3.4 REMOVAL OF FORMS

-- End of Section Table of Contents --

# SECTION 03100A

# STRUCTURAL CONCRETE FORMWORK
**05/98**

## PART 1 GENERAL

### 1.1 REFERENCES

The publications listed below form a part of this specification to the extent referenced. The publications are referred to in the text by basic designation only.

ACI INTERNATIONAL (ACI)

| | |
|---|---|
| ACI 347R | (1994) Guide to Formwork for Concrete |

AMERICAN HARDBOARD ASSOCIATION (AHA)

| | |
|---|---|
| AHA A135.4 | (1995) Basic Hardboard |

AMERICAN SOCIETY FOR TESTING AND MATERIALS (ASTM)

| | |
|---|---|
| ASTM C 578 | (2001) Rigid, Cellular Polystyrene Thermal Insulation |

U.S. DEPARTMENT OF COMMERCE (DOC)

| | |
|---|---|
| PS1 | (1996) Voluntary Product Standard - Construction and Industrial Plywood |

### 1.2 DESIGN

Formwork shall be designed in accordance with methodology of ACI 347R for anticipated loads, lateral pressures, and stresses. Forms shall be capable of producing a surface which meets the requirements of the class of finish specified in Section 03300 CAST-IN-PLACE STRUCTURAL CONCRETE. Forms shall be capable of withstanding the pressures resulting from placement and vibration of concrete.

### 1.3 STORAGE AND HANDLING

Fiber voids shall be stored above ground level in a dry location. Fiber voids shall be kept dry until installed and overlaid with concrete.

## PART 2 PRODUCTS

### 2.1 FORM MATERIALS

#### 2.1.1 Forms For Class B Finish

Forms for Class B finished surfaces shall be plywood panels conforming to PS1, Grade B-B concrete form panels, Class I or II. Other form materials

or liners may be used provided the smoothness and appearance of concrete produced will be equivalent to that produced by the plywood concrete form panels.

2.1.2 Forms For Class C Finish

Forms for Class C finished surfaces shall be shiplap lumber; plywood conforming to PS1, Grade B-B concrete form panels, Class I or II; tempered concrete form hardboard conforming to AHA A135.4; other approved concrete form material; or steel, except that steel lining on wood sheathing shall not be used.

2.1.3 Forms For Class D Finish

Forms for Class D finished surfaces, except where concrete is placed against earth, shall be wood or steel or other approved concrete form material.

2.1.4 Form Ties

Form ties shall be factory-fabricated metal ties, shall be of the removable or internal disconnecting or snap-off type, and shall be of a design that will not permit form deflection and will not spall concrete upon removal. Solid backing shall be provided for each tie. Except where removable tie rods are used, ties shall not leave holes in the concrete surface less than 1/4 inch nor more than 1 inch deep and not more than 1 inchin diameter. Removable tie rods shall be not more than 1-1/2 inches in diameter.

2.1.5 Form Releasing Agents

Form releasing agents shall be commercial formulations that will not bond with, stain or adversely affect concrete surfaces. Agents shall not impair subsequent treatment of concrete surfaces depending upon bond or adhesion nor impede the wetting of surfaces to be cured with water or curing compounds.

2.1.6 Fiber Voids

Fiber voids shall be the product of a reputable manufacturer regularly engaged in the commercial production of fiber voids. The voids shall be constructed of double faced, corrugated fiberboard. The corrugated fiberboard shall be fabricated of standard kraft paper liners, impregnated with paraffin, and laminated with moisture resistant adhesive, and shall have a board strength of 275 psi. Voids which are impregnated with paraffin after construction, in lieu of being constructed with paraffin impregnated fiberboard, are acceptable. Voids shall be designed to support not less than 1000 psf. To prevent separation during concrete placement fiber voids shall be assembled with steel or plastic banding at 4 feet on center maximum, or by adequate stapling or gluing as recommended by the manufacturer. Fiber voids placed under concrete slabs and that are 8 inches in depth may be heavy duty "waffle box" type, constructed of paraffin impregnated corrugated fiberboard.

2.2 FIBER VOID RETAINERS

2.2.1 Polystyrene Rigid Insulation

Polystyrene rigid insulation shall conform to ASTM C 578, Type V, VI, or VII, square edged. Size shall be 1-1/2 inches thick by 16 inches in

height by 3 feet in length, unless otherwise indicated.

2.2.2 Precast Concrete

Precast concrete units shall have a compressive strength of not less than 2500 psi, reinforced with 6 inch by 6 inch by W1.4 WWF wire mesh, and 12 inches (height) by 3 feet (length) by 1-5/8 inches (thickness) in size unless indicated.

PART 3 EXECUTION

3.1 INSTALLATION

3.1.1 Formwork

Forms shall be mortar tight, properly aligned and adequately supported to produce concrete surfaces meeting the surface requirements specified in Section 03300 CAST-IN-PLACE STRUCTURAL CONCRETE and conforming to construction tolerance given in TABLE 1. Where concrete surfaces are to have a Class B finish, joints in form panels shall be arranged as approved. Where forms for continuous surfaces are placed in successive units, the forms shall fit over the completed surface to obtain accurate alignment of the surface and to prevent leakage of mortar. Forms shall not be reused if there is any evidence of surface wear and tear or defects which would impair the quality of the surface. Surfaces of forms to be reused shall be cleaned of mortar from previous concreting and of all other foreign material before reuse. Form ties that are to be completely withdrawn shall be coated with a nonstaining bond breaker.

3.1.2 Fiber Voids

Voids shall be placed on a smooth firm dry bed of suitable material, to avoid being displaced vertically, and shall be set tight, with no buckled cartons, in order that horizontal displacement cannot take place. Each section of void shall have its ends sealed by dipping in paraffin, with any additional cutting of voids at the jobsite to be field dipped in the same type of sealer, unless liners and flutes are completely impregnated with paraffin. Joints shall be sealed with a moisture resistant tape having a minimum width of 3 inches. If voids are destroyed or damaged and are not capable of supporting the design load, they shall be replaced prior to placing of concrete.

3.1.3 Fiber Void Retainers

Fiber void retainers shall be installed, continuously, on both sides of fiber voids placed under grade beams in order to retain the cavity after the fiber voids biodegrade.

3.2 CHAMFERING

Except as otherwise shown, external corners that will be exposed shall be chamfered, beveled, or rounded by moldings placed in the forms.

3.3 COATING

Forms forClass B finished surfaces shall be coated with a form releasing agent before the form or reinforcement is placed in final position. The coating shall be used as recommended in the manufacturer's printed or written instructions. Forms for Class C and D finished surfaces may be wet

with water in lieu of coating immediately before placing concrete, except that in cold weather with probable freezing temperatures, coating shall be mandatory. Surplus coating on form surfaces and coating on reinforcing steel and construction joints shall be removed before placing concrete.

## 3.4 REMOVAL OF FORMS

Forms shall be removed preventing injury to the concrete and ensuring the complete safety of the structure. Formwork for columns, walls, side of beams and other parts not supporting the weight of concrete may be removed when the concrete has attained sufficient strength to resist damage from the removal operation but not before at least 24 hours has elapsed since concrete placement. Supporting forms and shores shall not be removed from beams, floors and walls until the structural units are strong enough to carry their own weight and any other construction or natural loads. Supporting forms or shores shall not be removed before the concrete strength has reached 70 percent of design strength, as determined by field cured cylinders or other approved methods. This strength shall be demonstrated by job-cured test specimens, and by a structural analysis considering the proposed loads in relation to these test strengths and the strength of forming and shoring system. The job-cured test specimens for form removal purposes shall be provided in numbers as directed and shall be in addition to those required for concrete quality control. The specimens shall be removed from molds at the age of 24 hours and shall receive, insofar as possible, the same curing and protection as the structures they represent.

TOLERANCES FOR FORMED SURFACES

| | |
|---|---|
| 1. Variations from the plumb: | In any 10 feet of length ---------- 1/4 inch |
| a. In the lines and surfaces of columns, piers, walls and in arises | Maximum for entire length ---------- 1 inch |
| b. For exposed corner columns,control-joint grooves, and other conspicuous lines | In any 20 feet of length ---------- ---- 1/4 inch<br>Maximum for entire length---------- 1/2 inch |
| 2. Variation from the level or from the grades indicated on the drawings: | In any 10 feet of length ----------1/4 inch<br>In any bay or in any 20 feet of length---------- 3/8 inch |
| a. In slab soffits, ceilings, beam soffits, and in arises, measured before removal of supporting shores | Maximum for entire length ---------- 3/4 inch |
| b. In exposed lintels, sills, parapets, horizontal grooves, and other conspicuous lines | In any bay or in any 20 feet of length ---------- ----- 1/4 inch<br>Maximum for entire length---------- 1/2 inch |

TOLERANCES FOR FORMED SURFACES

| | | |
|---|---|---|
| 3. | Variation of the linear building lines from established position in plan | In any 20 feet --------- 1/2 inch<br>Maximum ----------1 inch |
| 4. | Variation of distance between walls, columns, partitions | 1/4 inch per 10 feet of distance, but not more than 1/2 inch in any one bay,and not more than 1 inch total variation |
| 5. | Variation in the sizes and locations of sleeves, floor openings, and wall opening | Minus ---------- 1/4 inch<br>Plus ---------- 1/2 inch |
| 6. | Variation in cross-sectional dimensions of columns and beams and in the thickness of slabs and walls | Minus ---------- 1/4 inch<br>Plus ---------- 1/2 inch |
| 7. | Footings: | |
| | a. Variation of dimensions in plan | Minus ---------- 1/2 inch<br>Plus ---------- 2 inches when formed or plus 3 inches when placed against unformed excavation |
| | b. Misplacement of eccentricity | 2 percent of the footing width in the direction of misplacement but not more than 2 inches |
| | c. Reduction in thickness of specified thickness | Minus ---------- 5 percent |
| 8. | Variation in steps: | Riser ---------- 1/8 inch |
| | a. In a flight of stairs | Tread ---------- 1/4 inch |
| | b. In consecutive steps | Riser ---------- 1/16 inch<br>Tread ---------- 1/8 inch |

-- End of Section --

SECTION TABLE OF CONTENTS

DIVISION 03 - CONCRETE

SECTION 03150A

EXPANSION JOINTS, CONTRACTION JOINTS, AND WATERSTOPS

**05/98**

PART 1 GENERAL

1.1 SUBMITTALS
1.2 DELIVERY AND STORAGE

PART 2 PRODUCTS

2.1 WATERSTOPS

PART 3 EXECUTION

3.1 JOINTS
3.2 WATERSTOPS, INSTALLATION AND SPLICES
3.2.1 Non-Metallic
3.2.1.1 Polyvinyl Chloride Waterstop
3.2.1.2 Quality Assurance
3.3 CONSTRUCTION JOINTS

-- End of Section Table of Contents --

# SECTION 03150A

# EXPANSION JOINTS, CONTRACTION JOINTS, AND WATERSTOPS
**05/98**

## PART 1 GENERAL

### 1.1 SUBMITTALS

Government approval is required for submittals with a "G" designation; submittals not having a "G" designation are for information only. When used, a designation following the "G" designation identifies the office that will review the submittal for the Government. The following shall be submitted in accordance with Section 01330 SUBMITTAL PROCEDURES:

SD-02 Shop Drawings

Waterstops;

SD-03 Product Data

Waterstops;

Manufacturer's literature, including safety data sheets, for preformed fillers and the lubricants used in their installation; waterstops.

Manufacturer's recommended instructions for installing waterstops.

SD-04 Samples

SD-07 Certificates

Waterstops;

Certificates of compliance stating that the waterstops conform to the requirements specified.

### 1.2 DELIVERY AND STORAGE

Material delivered and placed in storage shall be stored off the ground and protected from moisture, dirt, and other contaminants. Sealants shall be delivered in the manufacturer's original unopened containers. Sealants whose shelf life has expired shall be removed from the site.

## PART 2 PRODUCTS

### 2.1 WATERSTOPS

Intersection and change of direction waterstops shall be shop fabricated.

## PART 3 EXECUTION

### 3.1 JOINTS

Joints shall be installed at locations indicated and as authorized.

### 3.2 WATERSTOPS, INSTALLATION AND SPLICES

Waterstops shall be installed at the locations shown to form a continuous water-tight diaphragm. Adequate provision shall be made to support and completely protect the waterstops during the progress of the work. Any waterstop punctured or damaged shall be repaired or replaced. Exposed waterstops shall be protected during application of form release agents to avoid being coated. Suitable guards shall be provided to protect exposed projecting edges and ends of partially embedded waterstops from damage when concrete placement has been discontinued. Splices shall be made by certified trained personnel using approved equipment and procedures.

#### 3.2.1 Non-Metallic

##### 3.2.1.1 Polyvinyl Chloride Waterstop

Splices shall be made by heat sealing the adjacent waterstop edges together using a thermoplastic splicing iron utilizing a non-stick surface specifically designed for waterstop welding. The correct temperature shall be used to sufficiently melt without charring the plastic. The spliced area, when cooled, shall show no signs of separation, holes, or other imperfections when bent by hand in as sharp an angle as possible.

##### 3.2.1.2 Quality Assurance

Edge welding will not be permitted. Centerbulbs shall be compressed or closed when welding to non-centerbulb type. Waterstop splicing defects which are unacceptable include, but are not limited to the following: 1) Tensile strength less than 80 percent of parent section. 2) Free lap joints. 3) Misalignment of centerbulb, ribs, and end bulbs greater than 1/16 inch. 4) Misalignment which reduces waterstop cross section more than 15 percent. 5) Bond failure at joint deeper than 1/16 inch or 15 percent of material thickness. 6) Misalignment of waterstop splice resulting in misalignment of waterstop in excess of 1/2 inch in 10 feet. 7) Visible porosity in the weld area, including pin holes. 8) Charred or burnt material. 9) Bubbles or inadequate bonding. 10) Visible signs of splice separation when cooled splice is bent by hand at a sharp angle.

### 3.3 CONSTRUCTION JOINTS

Construction joints are specified in Section 03300 CAST-IN-PLACE STRUCTURAL CONCRETE.

-- End of Section --

SECTION TABLE OF CONTENTS

DIVISION 03 - CONCRETE

SECTION 03200A

CONCRETE REINFORCEMENT

**09/97**

PART 1 GENERAL

1.1 REFERENCES
1.2 SUBMITTALS
1.3 WELDING
1.4 DELIVERY AND STORAGE

PART 2 PRODUCTS

2.1 DOWELS
2.2 FABRICATED BAR MATS
2.3 REINFORCING STEEL
2.4 WELDED WIRE FABRIC
2.5 WIRE TIES
2.6 SUPPORTS

PART 3 EXECUTION

3.1 REINFORCEMENT
3.1.1 Placement
3.1.2 Splicing
3.2 WELDED-WIRE FABRIC PLACEMENT
3.3 DOWEL INSTALLATION

-- End of Section Table of Contents --

SECTION 03200A

CONCRETE REINFORCEMENT
09/97

PART 1 GENERAL

1.1 REFERENCES

The publications listed below form a part of this specification to the extent referenced. The publications are referred to in the text by basic designation only.

ACI INTERNATIONAL (ACI)

| | |
|---|---|
| ACI 318/318R | (2002) Building Code Requirements for Structural Concrete and Commentary |

AMERICAN SOCIETY FOR TESTING AND MATERIALS (ASTM)

| | |
|---|---|
| ASTM A 53 | (1999) Pipe, Steel, Black and Hot-Dipped, Zinc-Coated, Welded and Seamless |
| ASTM A 184/A 184M | (1996) Fabricated Deformed Steel Bar Mats for Concrete Reinforcement |
| ASTM A 185 | (1997) Steel Welded Wire Fabric, Plain, for Concrete Reinforcement |
| ASTM A 615/A 615M | (2001b) Deformed and Plain Billet-Steel Bars for Concrete Reinforcement |
| ASTM A 675/A 675M | (1990a; R 1995e1) Steel Bars, Carbon, Hot-Wrought, Special Quality, Mechanical Properties |
| ASTM A 706/A 706M | (1998) Low-Alloy Steel Deformed and Plain Bars for Concrete Reinforcement |

AMERICAN WELDING SOCIETY (AWS)

| | |
|---|---|
| AWS D1.4 | (1998) Structural Welding Code - Reinforcing Steel |

CONCRETE REINFORCING STEEL INSTITUTE (CRSI)

| | |
|---|---|
| CRSI 1 MSP | (1996) Manual of Standard Practice |

1.2 SUBMITTALS

Government approval is required for submittals with a "G" designation; submittals not having a "G" designation are for information only. When used, a designation following the "G" designation identifies the office that will review the submittal for the Government. The following shall be submitted in accordance with Section 01330 SUBMITTAL PROCEDURES:

SD-02 Shop Drawings

Reinforcement; G AE

Detail drawings showing reinforcing steel placement, schedules, sizes, grades, and splicing and bending details. Drawings shall show support details including types, sizes and spacing.

SD-07 Certificates

Reinforcing Steel;

Certified copies of mill reports attesting that the reinforcing steel furnished contains no less than 25 percent recycled scrap steel and meets the requirements specified herein, prior to the installation of reinforcing steel.

1.3 WELDING

Welders shall be qualified in accordance with AWS D1.4. Qualification test shall be performed at the worksite and the Contractor shall notify the Contracting Officer 24 hours prior to conducting tests. Special welding procedures and welders qualified by others may be accepted as permitted by AWS D1.4.

1.4 DELIVERY AND STORAGE

Reinforcement and accessories shall be stored off the ground on platforms, skids, or other supports.

PART 2 PRODUCTS

2.1 DOWELS

Dowels shall conform to ASTM A 675/A 675M, Grade 80. Steel pipe conforming to ASTM A 53, Schedule 80, may be used as dowels provided the ends are closed with metal or plastic inserts or with mortar.

2.2 FABRICATED BAR MATS

Fabricated bar mats shall conform to ASTM A 184/A 184M.

2.3 REINFORCING STEEL

Reinforcing steel shall be deformed bars conforming to ASTM A 615/A 615M or ASTM A 706/A 706M, grade 60.

2.4 WELDED WIRE FABRIC

Welded wire fabric shall conform to ASTM A 185 .

## 2.5 WIRE TIES

Wire ties shall be 16 gauge or heavier black annealed steel wire.

## 2.6 SUPPORTS

Bar supports for formed surfaces shall be designed and fabricated in accordance with CRSI 1 MSP and shall be steel or precast concrete blocks. Precast concrete blocks shall have wire ties and shall be not less than 4 inches square when supporting reinforcement on ground. Precast concrete block shall have compressive strength equal to that of the surrounding concrete. Where concrete formed surfaces will be exposed to weather or where surfaces are to be painted, steel supports within 1/2 inch of concrete surface shall be galvanized, plastic protected or of stainless steel. Concrete supports used in concrete exposed to view shall have the same color and texture as the finish surface. For slabs on grade, supports shall be precast concrete blocks, plastic coated steel fabricated with bearing plates, or specifically designed wire-fabric supports fabricated of plastic.

# PART 3 EXECUTION

## 3.1 REINFORCEMENT

Reinforcement shall be fabricated to shapes and dimensions shown and shall conform to the requirements of ACI 318/318R. Reinforcement shall be cold bent unless otherwise authorized. Bending may be accomplished in the field or at the mill. Bars shall not be bent after embedment in concrete. Safety caps shall be placed on all exposed ends of vertical concrete reinforcement bars that pose a danger to life safety. Wire tie ends shall face away from the forms.

### 3.1.1 Placement

Reinforcement shall be free from loose rust and scale, dirt, oil, or other deleterious coating that could reduce bond with the concrete. Reinforcement shall be placed in accordance with ACI 318/318R at locations shown plus or minus one bar diameter. Reinforcement shall not be continuous through expansion joints and shall be as indicated through construction or contraction joints. Concrete coverage shall be as indicated or as required by ACI 318/318R. If bars are moved more than one bar diameter to avoid interference with other reinforcement, conduits or embedded items, the resulting arrangement of bars, including additional bars required to meet structural requirements, shall be approved before concrete is placed.

### 3.1.2 Splicing

Splices of reinforcement shall conform to ACI 318/318R and shall be made only as required or indicated. Splicing shall be by lapping except that lap splices shall not be used for bars larger than No. 11 unless otherwise indicated. Lapped bars shall be placed in contact and securely tied or spaced transversely apart to permit the embedment of the entire surface of each bar in concrete. Lapped bars shall not be spaced farther apart than one-fifth the required length of lap or 6 inches.

## 3.2 WELDED-WIRE FABRIC PLACEMENT

Welded-wire fabric shall be placed in slabs as indicated. Fabric placed in

slabs on grade shall be continuous between expansion, construction, and contraction joints. Fabric placement at joints shall be as indicated. Lap splices shall be made in such a way that the overlapped area equals the distance between the outermost crosswires plus 2 inches. Laps shall be staggered to avoid continuous laps in either direction. Fabric shall be wired or clipped together at laps at intervals not to exceed 4 feet. Fabric shall be positioned by the use of supports.

## 3.3 DOWEL INSTALLATION

Dowels shall be installed in slabs on grade at locations indicated and at right angles to joint being doweled. Dowels shall be accurately positioned and aligned parallel to the finished concrete surface before concrete placement. Dowels shall be rigidly supported during concrete placement. One end of dowels shall be coated with a bond breaker.

-- End of Section --

SECTION TABLE OF CONTENTS

DIVISION 03 - CONCRETE

SECTION 03300

CAST-IN-PLACE STRUCTURAL CONCRETE

**11/01**

PART 1 GENERAL

1.1 REFERENCES
1.2 UNIT PRICE CONTRACT
1.2.1 Measurement
1.2.2 Payment
1.3 LUMP SUM CONTRACT
1.4 SUBMITTALS
1.5 QUALIFICATIONS
1.6 GENERAL REQUIREMENTS
1.6.1 Tolerances
1.6.1.1 Floors
1.6.1.2 Floors by the Straightedge System
1.6.2 Strength Requirements and w/c Ratio
1.6.2.1 Strength Requirements
1.6.2.2 Water-Cement Ratio
1.6.3 Air Entrainment
1.6.4 Slump
1.6.5 Concrete Temperature
1.6.6 Size of Coarse Aggregate
1.7 MIXTURE PROPORTIONS
1.7.1 Proportioning Studies for Normal Weight Concrete
1.7.2 Average Compressive Strength Required for Mixtures
1.7.2.1 Computations from Test Records
1.7.2.2 Computations without Previous Test Records
1.8 STORAGE OF MATERIALS
1.9 GOVERNMENT ASSURANCE INSPECTION AND TESTING
1.9.1 Materials
1.9.2 Fresh Concrete
1.9.3 Hardened Concrete
1.9.4 Inspection

PART 2 PRODUCTS

2.1 CEMENTITIOUS MATERIALS
2.1.1 Portland Cement
2.1.2 Blended Cements
2.1.3 Pozzolan (Fly Ash)
2.2 AGGREGATES
2.2.1 Fine Aggregate
2.2.2 Coarse Aggregate
2.3 CHEMICAL ADMIXTURES
2.3.1 Air-Entraining Admixture
2.3.2 Water-Reducing or Retarding Admixture
2.4 CURING MATERIALS
2.4.1 Impervious-Sheet

2.4.2 Membrane-Forming Compound
2.4.3 Burlap and Cotton Mat
2.5 WATER
2.6 EMBEDDED ITEMS
2.7 FLOOR HARDENER
2.8 PERIMETER INSULATION
2.9 VAPOR BARRIER

PART 3 EXECUTION

3.1 PREPARATION FOR PLACING
3.1.1 Foundations
3.1.1.1 Concrete on Earth Foundations
3.1.1.2 Excavated Surfaces in Lieu of Forms
3.1.2 Previously Placed Concrete
3.1.2.1 Preparation of Previously Placed Concrete
3.1.3 Vapor Barrier
3.1.4 Perimeter Insulation
3.1.5 Embedded Items
3.2 CONCRETE PRODUCTION, SMALL PROJECTS
3.3 TRANSPORTING CONCRETE TO PROJECT SITE
3.4 CONVEYING CONCRETE ON SITE
3.4.1 Buckets
3.4.2 Transfer Hoppers
3.4.3 Trucks
3.4.4 Chutes
3.4.5 Belt Conveyors
3.4.6 Concrete Pumps
3.5 PLACING CONCRETE
3.5.1 Depositing Concrete
3.5.2 Consolidation
3.5.3 Cold Weather Requirements
3.5.4 Hot Weather Requirements
3.5.5 Prevention of Plastic Shrinkage Cracking
3.5.6 Placing Concrete in Congested Areas
3.6 JOINTS
3.6.1 Construction Joints
3.6.2 Waterstops
3.6.3 Dowels
3.7 FINISHING FORMED SURFACES
3.7.1 Class B Finish
3.7.2 Class C and Class D Finish
3.8 REPAIRS
3.8.1 Damp-Pack Mortar Repair
3.8.2 Repair of Major Defects
3.8.2.1 Surface Application of Mortar Repair
3.8.2.2 Repair of Deep and Large Defects
3.9 FINISHING UNFORMED SURFACES
3.9.1 General
3.9.2 Rough Slab Finish
3.9.3 Floated Finish
3.9.4 Troweled Finish
3.9.5 Non-Slip Finish
3.9.5.1 Broomed
3.10 FLOOR HARDENER
3.11 CURING AND PROTECTION
3.11.1 General
3.11.2 Moist Curing
3.11.3 Membrane Forming Curing Compounds

3.11.4 Impervious Sheeting
3.11.5 Ponding or Immersion
3.11.6 Cold Weather Curing and Protection
3.12 SETTING BASE PLATES AND BEARING PLATES
3.12.1 Damp-Pack Bedding Mortar
3.13 TESTING AND INSPECTION FOR CONTRACTOR QUALITY CONTROL
3.13.1 Concrete Mixture
3.13.2 Inspection Before Placing
3.13.3 Placing
3.13.4 Curing Inspection
3.13.5 Cold-Weather Protection
3.13.6 Reports

-- End of Section Table of Contents --

SECTION 03300

CAST-IN-PLACE STRUCTURAL CONCRETE
**11/01**

PART 1 GENERAL

1.1 REFERENCES

The publications listed below form a part of this specification to the extent referenced. The publications are referred to in the text by basic designation only.

ACI INTERNATIONAL (ACI)

| | |
|---|---|
| ACI 117/117R | (1990; Errata) Standard Tolerances for Concrete Construction and Materials |
| ACI 211.1 | (1991) Standard Practice for Selecting Proportions for Normal, Heavyweight, and Mass Concrete |
| ACI 214.3R | (1988; R 1997) Simplified Version of the Recommended Practice for Evaluation of Strength Test Results of Concrete |
| ACI 301 | (1999) Standard Specifications for Structural Concrete |
| ACI 305R | (1999) Hot Weather Concreting |
| ACI 318/318R | (2002) Building Code Requirements for Structural Concrete and Commentary |

AMERICAN ASSOCIATION OF STATE HIGHWAY AND TRANSPORTATION OFFICIALS (AASHTO)

| | |
|---|---|
| AASHTO M 182 | (1991; R 1996) Burlap Cloth Made from Jute or Kenaf |

AMERICAN SOCIETY FOR TESTING AND MATERIALS (ASTM)

| | |
|---|---|
| ASTM C 1064/C 1064M | (1999) Temperature of Freshly Mixed Portland Cement Concrete |
| ASTM C 1077 | (1998) Laboratories Testing Concrete and Concrete Aggregates for Use in Construction and Criteria for Laboratory Evaluation |
| ASTM C 143/C 143M | (2000) Slump of Hydraulic Cement Concrete |
| ASTM C 150 | (1999a) Portland Cement |
| ASTM C 171 | (1997a) Sheet Materials for Curing Concrete |

| | |
|---|---|
| ASTM C 172 | (1999) Sampling Freshly Mixed Concrete |
| ASTM C 192/C 192M | (2000) Making and Curing Concrete Test Specimens in the Laboratory |
| ASTM C 231 | (1997el) Air Content of Freshly Mixed Concrete by the Pressure Method |
| ASTM C 260 | (2000) Air-Entraining Admixtures for Concrete |
| ASTM C 309 | (1998a) Liquid Membrane-Forming Compounds for Curing Concrete |
| ASTM C 31/C 31M | (2000e1) Making and Curing Concrete Test Specimens in the Field |
| ASTM C 33 | (1999ae1) Concrete Aggregates |
| ASTM C 39/C 39M | (2001) Compressive Strength of Cylindrical Concrete Specimens |
| ASTM C 42/C 42M | (1999) Obtaining and Testing Drilled Cores and Sawed Beams of Concrete |
| ASTM C 494/C 494M | (1999ae1) Chemical Admixtures for Concrete |
| ASTM C 552 | (2000) Cellular Glass Thermal Insulation |
| ASTM C 578 | (2001) Rigid, Cellular Polystyrene Thermal Insulation |
| ASTM C 591 | (2001) Unfaced Preformed Rigid Cellular Polyisocyanurate Thermal Insulation |
| ASTM C 595 | (2000a) Blended Hydraulic Cements |
| ASTM C 618 | (2000) Coal Fly Ash and Raw or Calcined Natural Pozzolan for Use as a Mineral Admixture in Concrete |
| ASTM C 78 | (1994) Flexural Strength of Concrete (Using Simple Beam With Third-Point Loading) |
| ASTM C 94/C 94M | (2000e2) Ready-Mixed Concrete |
| ASTM C 940 | (1998a) Expansion and Bleeding of Freshly Mixed Grouts for Preplaced-Aggregate Concrete in the Laboratory |
| ASTM D 75 | (1987; R 1997) Sampling Aggregates |
| ASTM E 96 | (2000e1) Water Vapor Transmission of Materials |

NATIONAL READY-MIXED CONCRETE ASSOCIATION (NRMCA)

| | |
|---|---|
| NRMCA CPMB 100 | (1996) Concrete Plant Standards \$n/c$\X |
| NRMCA QC 3 | (1984) Quality Control Manual: Section 3, Plant Certifications Checklist: Certification of Ready Mixed Concrete Production Facilities |
| NRMCA TMMB 100 | (1994) Truck Mixer Agitator and Front Discharge Concrete Carrier Standards |

U.S. ARMY CORPS OF ENGINEERS (USACE)

| | |
|---|---|
| COE CRD-C 400 | (1963) Requirements for Water for Use in Mixing or Curing Concrete |
| COE CRD-C 521 | (1981) Standard Test Method for Frequency and Amplitude of Vibrators for Concrete |

## 1.2 UNIT PRICE CONTRACT

### 1.2.1 Measurement

Measurement of concrete for payment will be made on the basis of the actual volume within the pay lines of the structure as indicated on the contract drawings. Measurement for payment of concrete placed against the sides of any excavation without intervening forms will be made only within the pay lines of the structure as shown on the contract drawings. No deductions will be made for rounded or beveled edges, for space occupied by metal work, for conduits, for voids, or for embedded items which are less than 5 cubic feet in volume or 1 square foot in cross section.

### 1.2.2 Payment

Unless otherwise specified, payment for concrete will be made at the respective unit prices per cubic yard for the various items of the schedule, measured as specified above, which price shall include the cost of all labor, materials, and the use of equipment and tools required to complete the concrete work, except for any reinforcement and embedded parts specified to be paid separately. Unit price payment will not be made for concrete placed in structures for which payment is made as a lump sum.

## 1.3 LUMP SUM CONTRACT

Under this type of contract concrete items will be paid for by lump sum and will not be measured. The work covered by these items consists of furnishing all concrete materials, reinforcement, miscellaneous embedded materials, and equipment, and performing all labor for the forming, manufacture, transporting, placing, finishing, curing, and protection of concrete in these structures.

## 1.4 SUBMITTALS

Government approval is required for submittals with a "G" designation; submittals not having a "G" designation are for information only. When used, a designation following the "G" designation identifies the office that will review the submittal for the Government. The following shall be

submitted in accordance with Section 01330 SUBMITTAL PROCEDURES:

SD-03 Product Data

Mixture Proportions; G, AE

The results of trial mixture design studies along with a statement giving the maximum nominal coarse aggregate size and the proportions of ingredients that will be used in the manufacture of each strength or class of concrete, at least 14 days prior to commencing concrete placing operations. Aggregate weights shall be based on the saturated surface dry condition. The statement shall be accompanied by test results from an approved independent commercial testing laboratory, showing that mixture design studies have been made with materials proposed for the project and that the proportions selected will produce concrete of the qualities indicated. No substitutions shall be made in the materials used in the mixture design studies without additional tests to show that the quality of the concrete is satisfactory.

SD-06 Test Reports

Testing and Inspection for Contractor Quality Control;

Certified copies of laboratory test reports, including mill tests and all other test data, for portland cement, blended cement, pozzolan, admixtures, and curing compound proposed for use on this project.

SD-07 Certificates

Qualifications;

Written documentation for Contractor Quality Control personnel.

## 1.5 QUALIFICATIONS

Contractor Quality Control personnel assigned to concrete construction shall be American Concrete Institute (ACI) Certified Workmen in one of the following grades or shall have written evidence of having completed similar qualification programs:

Concrete Field Testing Technician, Grade I
Concrete Laboratory Testing Technician, Grade I or II
Concrete Construction Inspector, Level II

The foreman or lead journeyman of the flatwork finishing crew shall have similar qualification for ACI Concrete Flatwork Technician/Finisher or equal, with written documentation.

## 1.6 GENERAL REQUIREMENTS

### 1.6.1 Tolerances

Except as otherwise specified herein, tolerances for concrete batching, mixture properties, and construction as well as definition of terms and application practices shall be in accordance with ACI 117/117R. Level and

grade tolerance measurements of slabs shall be made as soon as possible after finishing; when forms or shoring are used, the measurements shall be made prior to removal.

1.6.1.1 Floors

For the purpose of this Section the following terminology correlation between ACI 117/117R and this Section shall apply:

| Floor Profile Quality Classification From ACI 117/117R | This Section |
|---|---|
| Conventional Bullfloated | Same |
| Conventional Straightedged | Same |
| Flat | Float Finish or Trowel Finish |

Levelness tolerance shall not apply where design requires floors to be sloped to drains or sloped for other reasons.

1.6.1.2 Floors by the Straightedge System

The flatness of the floors shall be carefully controlled and the tolerances shall be measured by the straightedge system as specified in paragraph 4.5.7 of ACI 117/117R, using a 10 foot straightedge, within 72 hours after floor slab installation and before shores and/or forms are removed. The listed tolerances shall be met at any and every location at which the straightedge can be placed. See Paragraph "Finishing Unformed Surfaces" for slab finish requirements.

| | |
|---|---|
| Bullfloated | 1/2 inch |
| Straightedged | 5/16 inch |
| Float Finish | 3/16 inch |
| Trowel Finish | 3/16 inch |

1.6.2 Strength Requirements and w/c Ratio

1.6.2.1 Strength Requirements

Specified compressive strength (f'c) shall be as follows:

| COMPRESSIVE STRENGTH | STRUCTURE OR PORTION OF STRUCTURE |
|---|---|
| 4000 psi at 28 days | Structural foundation mat |
| 3000 psi at 28 days | All other work |

a. Evaluation of Concrete Compressive Strength. Compressive strength specimens (6 by 12 inch cylinders) shall be fabricated by the Contractor and laboratory cured in accordance with ASTM C 31/C 31M and tested in accordance with ASTM C 39/C 39M. The strength of the concrete will be considered satisfactory so long as the average of all sets of three consecutive test results equals or exceeds the specified compressive strength f'c and no individual test result falls below the specified strength f'c by more than 500 psi. A "test" is defined as the average of two companion cylinders, or if only one cylinder is tested, the results of the single cylinder test. Additional analysis or testing, including taking cores and/or load tests may be required at the Contractor's expense when the strength of the concrete in the structure is

considered potentially deficient.

b. Investigation of Low-Strength Compressive Test Results. When any strength test of standard-cured test cylinders falls below the specified strength requirement by more than 500 psi or if tests of field-cured cylinders indicate deficiencies in protection and curing, steps shall be taken to assure that the load-carrying capacity of the structure is not jeopardized. When the strength of concrete in place is considered potentially deficient, cores shall be obtained and tested in accordance with ASTM C 42/C 42M. At least three representative cores shall be taken from each member or area of concrete in place that is considered potentially deficient. The location of cores will be determined by the Contracting Officer to least impair the strength of the structure. Concrete in the area represented by the core testing will be considered adequate if the average strength of the cores is equal to at least 85 percent of the specified strength requirement and if no single core is less than 75 percent of the specified strength requirement. Non-destructive tests (tests other than test cylinders or cores) shall not be used as a basis for acceptance or rejection. The Contractor shall perform the coring and repair the holes. Cores will be tested by the Government.

c. Load Tests. If the core tests are inconclusive or impractical to obtain or if structural analysis does not confirm the safety of the structure, load tests may be directed by the Contracting Officer in accordance with the requirements of ACI 318/318R. Concrete work evaluated by structural analysis or by results of a load test as being understrength shall be corrected in a manner satisfactory to the Contracting Officer. All investigations, testing, load tests, and correction of deficiencies shall be performed by and at the expense of the Contractor and must be approved by the Contracting Officer, except that if all concrete is found to be in compliance with the drawings and specifications, the cost of investigations, testing, and load tests will be at the expense of the Government.

1.6.2.2 Water-Cement Ratio

Maximum water-cement ratio (w/c) for normal weight concrete shall be 0.45. These w/c's may cause higher strengths than that required above for compressive or flexural strength. The maximum w/c required will be the equivalent w/c as determined by conversion from the weight ratio of water to cement plus pozzolan by the weight equivalency method as described in ACI 211.1.

1.6.3 Air Entrainment

All normal weight concrete shall be air entrained to contain between 4 and 7 percent total air, except that when the nominal maximum size coarse aggregate is 3/4 inch or smaller it shall be between 4.5 and 7.5 percent. Specified air content shall be attained at point of placement into the forms. Air content for normal weight concrete shall be determined in accordance with ASTM C 231.

1.6.4 Slump

Slump of the concrete, as delivered to the point of placement into the forms, shall be within the following limits. Slump shall be determined in

accordance with ASTM C 143/C 143M.

| Structural Element | Slump Minimum | Slump Maximum |
|---|---|---|
| Walls, columns and beams | 2 in. | 4 in. |
| Foundation walls, substructure walls, footings, slabs, structural foundation mats | 1 in. | 3 in. |
| Any structural concrete approved for placement by pumping: | | |
| At pump | 2 in. | 6 in. |
| At discharge of line | 1 in. | 4 in. |

1.6.5 Concrete Temperature

The temperature of the concrete as delivered shall not exceed 90 degrees F. When the ambient temperature during placing is 40 degrees F or less, or is expected to be at any time within 6 hours after placing, the temperature of the concrete as delivered shall be between 55 and 75 degrees F.

1.6.6 Size of Coarse Aggregate

The largest feasible nominal maximum size aggregate (NMSA) specified in paragraph AGGREGATES shall be used in each placement. However, nominal maximum size of aggregate shall not exceed any of the following: three-fourths of the minimum cover for reinforcing bars, three-fourths of the minimum clear spacing between reinforcing bars, one-fifth of the narrowest dimension between sides of forms, or one-third of the thickness of slabs or toppings.

1.7 MIXTURE PROPORTIONS

Concrete shall be composed of portland cement, other cementitious and pozzolanic materials as specified, aggregates, water and admixtures as specified.

1.7.1 Proportioning Studies for Normal Weight Concrete

Trial design batches, mixture proportioning studies, and testing requirements for various classes and types of concrete specified shall be the responsibility of the Contractor. Mixture proportions shall be based on compressive strength as determined by test specimens fabricated in accordance with ASTM C 192/C 192M and tested in accordance with ASTM C 39/C 39M. Samples of all materials used in mixture proportioning studies shall be representative of those proposed for use in the project and shall be accompanied by the manufacturer's or producer's test reports indicating compliance with these specifications. Trial mixtures having proportions, consistencies, and air content suitable for the work shall be made based on methodology described in ACI 211.1, using at least three different water-cement ratios for each type of mixture, which will produce a range of strength encompassing those required for each class and type of concrete required on the project. The maximum water-cement ratios required in subparagraph Water-Cement Ratio will be the equivalent water-cement ratio as determined by conversion from the weight ratio of water to cement plus

pozzolanby the weight equivalency method as described in ACI 211.1. If pozzolan is used in the concrete mixture, the minimum pozzolan content shall be 15 percent by weight of the total cementitious material, and the maximum shall be 35 percent. Laboratory trial mixtures shall be designed for maximum permitted slump and air content. Separate sets of trial mixture studies shall be made for each combination of cementitious materials and each combination of admixtures proposed for use. No combination of either shall be used until proven by such studies, except that, if approved in writing and otherwise permitted by these specifications, an accelerator or a retarder may be used without separate trial mixture study. Separate trial mixture studies shall also be made for concrete for any conveying or placing method proposed which requires special properties and for concrete to be placed in unusually difficult placing locations. The temperature of concrete in each trial batch shall be reported. For each water-cement ratio, at least three test cylinders for each test age shall be made and cured in accordance withASTM C 192/C 192M. They shall be tested at 7 and 28 days in accordance with ASTM C 39/C 39M. From these test results, a curve shall be plotted showing the relationship between water-cement ratio and strength for each set of trial mix studies. In addition, a curve shall be plotted showing the relationship between 7 day and 28 day strengths. Each mixture shall be designed to promote easy and suitable concrete placement, consolidation and finishing, and to prevent segregation and excessive bleeding.

### 1.7.2 Average Compressive Strength Required for Mixtures

The mixture proportions selected during mixture design studies shall produce a required average compressive strength (f'cr) exceeding the specified compressive strength (f'c) by the amount indicated below. This required average compressive strength, f'cr, will not be a required acceptance criteria during concrete production. However, whenever the daily average compressive strength at 28 days drops below f'cr during concrete production, or daily average 7-day strength drops below a strength correlated with the 28-day f'cr, the mixture shall be adjusted, as approved, to bring the daily average back up to f'cr. During production, the required f'cr shall be adjusted, as appropriate, based on the standard deviation being attained on the job.

#### 1.7.2.1 Computations from Test Records

Where a concrete production facility has test records, a standard deviation shall be established in accordance with the applicable provisions of ACI 214.3R. Test records from which a standard deviation is calculated shall represent materials, quality control procedures, and conditions similar to those expected; shall represent concrete produced to meet a specified strength or strengths (f'c) within 1,000 psi of that specified for proposed work; and shall consist of at least 30 consecutive tests. A strength test shall be the average of the strengths of two cylinders made from the same sample of concrete and tested at 28 days. Required average compressive strength f'cr used as the basis for selection of concrete proportions shall be the larger of the equations that follow using the standard deviation as determined above:

$f'cr = f'c + 1.34S$ where units are in psi

f'cr = f'c + 2.33S - 500 where units are in psi

Where S = standard deviation

Where a concrete production facility does not have test records meeting the requirements above but does have a record based on 15 to 29 consecutive tests, a standard deviation shall be established as the product of the calculated standard deviation and a modification factor from the following table:

| NUMBER OF TESTS | MODIFICATION FACTOR FOR STANDARD DEVIATION |
|---|---|
| 15 | 1.16 |
| 20 | 1.08 |
| 25 | 1.03 |
| 30 or more | 1.00 |

1.7.2.2 Computations without Previous Test Records

When a concrete production facility does not have sufficient field strength test records for calculation of the standard deviation, the required average strength f'cr shall be determined as follows:

a. If the specified compressive strength f'c is less than 3,000 psi,

f'cr = f'c + 1000 psi

b. If the specified compressive strength f'c is 3,000 to 5,000 psi,

f'cr = f'c + 1,200 psi

c. If the specified compressive strength f'c is over 5,000 psi,

f'cr = f'c + 1,400 psi

1.8 STORAGE OF MATERIALS

Cement and other cementitious materials shall be stored in weathertight buildings, bins, or silos which will exclude moisture and contaminants and keep each material completely separated. Aggregate stockpiles shall be arranged and used in a manner to avoid excessive segregation and to prevent contamination with other materials or with other sizes of aggregates. Aggregate shall not be stored directly on ground unless a sacrificial layer is left undisturbed. Reinforcing bars and accessories shall be stored above the ground on platforms, skids or other supports. Other materials shall be stored in such a manner as to avoid contamination and deterioration. Admixtures which have been in storage at the project site for longer than 6 months or which have been subjected to freezing shall not be used unless retested and proven to meet the specified requirements. Materials shall be capable of being accurately identified after bundles or containers are opened.

1.9 GOVERNMENT ASSURANCE INSPECTION AND TESTING

Day-to day inspection and testing shall be the responsibility of the Contractor Quality Control (CQC) staff. However, representatives of the Contracting Officer can and will inspect construction as considered appropriate and will monitor operations of the Contractor's CQC staff.

Government inspection or testing will not relieve the Contractor of any of his CQC responsibilities.

1.9.1 Materials

The Government will sample and test aggregates, cementitious materials, other materials, and concrete to determine compliance with the specifications as considered appropriate. The Contractor shall provide facilities and labor as may be necessary for procurement of representative test samples. Samples of aggregates will be obtained at the point of batching in accordance with ASTM D 75. Other materials will be sampled from storage at the jobsite or from other locations as considered appropriate. Samples may be placed in storage for later testing when appropriate.

1.9.2 Fresh Concrete

Fresh concrete will be sampled as delivered in accordance with ASTM C 172 and tested in accordance with these specifications, as considered necessary.

1.9.3 Hardened Concrete

Tests on hardened concrete will be performed by the Government when such tests are considered necessary.

1.9.4 Inspection

Concrete operations may be tested and inspected by the Government as the project progresses. Failure to detect defective work or material will not prevent rejection later when a defect is discovered nor will it obligate the Government for final acceptance.

PART 2 PRODUCTS

2.1 CEMENTITIOUS MATERIALS

Cementitious Materials shall be portland cement, or portland cement in combination with pozzolan and shall conform to appropriate specifications listed below. Use of cementitious materials in concrete which will have surfaces exposed in the completed structure shall be restricted so there is no change in color, source, or type of cementitious material.

2.1.1 Portland Cement

ASTM C 150, Type V.

2.1.2 Blended Cements

ASTM C 595, Type IS (MS) .

2.1.3 Pozzolan (Fly Ash)

ASTM C 618, Class C with the optional requirements for multiple factor, drying shrinkage, and uniformity from Table 2A of ASTM C 618. . If pozzolan is used, it shall never be less than 15 percent nor more than 35 percent by weight of the total cementitious material. The Contractor shall comply with EPA requirements in accordance with Section 01670 RECYCLED / RECOVERED MATERIALS.

## 2.2 AGGREGATES

Aggregates shall conform to the following.

### 2.2.1 Fine Aggregate

Fine aggregate shall conform to the quality and gradation requirements of ASTM C 33.

### 2.2.2 Coarse Aggregate

Coarse aggregate shall conform to ASTM C 33, Class 5S, size designation 67.

## 2.3 CHEMICAL ADMIXTURES

Chemical admixtures, when required or permitted, shall conform to the appropriate specification listed. Admixtures shall be furnished in liquid form and of suitable concentration for easy, accurate control of dispensing.

### 2.3.1 Air-Entraining Admixture

ASTM C 260 and shall consistently entrain the air content in the specified ranges under field conditions.

### 2.3.2 Water-Reducing or Retarding Admixture

ASTM C 494/C 494M, Type A, B, or D, except that the 6-month and 1-year compressive and flexural strength tests are waived.

## 2.4 CURING MATERIALS

### 2.4.1 Impervious-Sheet

Impervious-sheet materials shall conform to ASTM C 171, type optional, except, that polyethylene sheet shall not be used.

### 2.4.2 Membrane-Forming Compound

Membrane-Forming curing compound shall conform to ASTM C 309, Type 1-D or 2, except that only a styrene acrylate or chlorinated rubber compound meeting Class B requirements shall be used for surfaces that are to be painted or are to receive bituminous roofing, or waterproofing, or floors that are to receive adhesive applications of resilient flooring. The curing compound selected shall be compatible with any subsequent paint, roofing, waterproofing, or flooring specified. Nonpigmented compound shall contain a fugitive dye, and shall have the reflective requirements in ASTM C 309 waived.

### 2.4.3 Burlap and Cotton Mat

Burlap and cotton mat used for curing shall conform to AASHTO M 182.

## 2.5 WATER

Water for mixing and curing shall be fresh, clean, potable, and free of injurious amounts of oil, acid, salt, or alkali, except that non-potable water may be used if it meets the requirements of COE CRD-C 400.

## 2.6 EMBEDDED ITEMS

Embedded items shall be of the size and type indicated or as needed for the application.

## 2.7 FLOOR HARDENER

Floor hardener shall be a colorless aqueous solution containing zinc silicofluoride, magnesium silicofluoride, or sodium silicofluoride. These silicofluorides can be used individually or in combination. Proprietary hardeners may be used if approved in writing by the Contracting Officer.

## 2.8 PERIMETER INSULATION

Perimeter insulation shall be polystyrene conforming to ASTM C 578, Type II; polyurethane conforming to ASTM C 591, Type II; or cellular glass conforming to ASTM C 552, Type I or IV. The Contractor shall comply with EPA requirements in accordance with Section 01670 RECYCLED / RECOVERED MATERIALS.

## 2.9 VAPOR BARRIER

Vapor barrier shall be polyethylene sheeting with a minimum thickness of 6 mils or other equivalent material having a vapor permeance rating not exceeding 0.5 perms as determined in accordance with ASTM E 96.

# PART 3 EXECUTION

## 3.1 PREPARATION FOR PLACING

Before commencing concrete placement, the following shall be performed. Surfaces to receive concrete shall be clean and free from frost, ice, mud, and water. Forms shall be in place, cleaned, coated, and adequately supported, in accordance with Section 03100A STRUCTURAL CONCRETE FORMWORK. Reinforcing steel shall be in place, cleaned, tied, and adequately supported, in accordance with Section 03200A CONCRETE REINFORCEMENT. Transporting and conveying equipment shall be in-place, ready for use, clean, and free of hardened concrete and foreign material. Equipment for consolidating concrete shall be at the placing site and in proper working order. Equipment and material for curing and for protecting concrete from weather or mechanical damage shall be at the placing site, in proper working condition and in sufficient amount for the entire placement. When hot, windy conditions during concreting appear probable, equipment and material shall be at the placing site to provide windbreaks, shading, fogging, or other action to prevent plastic shrinkage cracking or other damaging drying of the concrete.

### 3.1.1 Foundations

#### 3.1.1.1 Concrete on Earth Foundations

Earth (subgrade, base, or subbase courses) surfaces upon which concrete is to be placed shall be clean, damp, and free from debris, frost, ice, and standing or running water. Prior to placement of concrete, the foundation shall be well drained and shall be satisfactorily graded and uniformly compacted.

3.1.1.2 Excavated Surfaces in Lieu of Forms

Concrete for structural foundation mats may be placed directly against the soil provided the earth or rock has been carefully trimmed, is uniform and stable, and meets the compaction requirements of Section 02315AEXCAVATION, FILLING, AND BACKFILLING FOR BUILDINGS. The concrete shall be placed without becoming contaminated by loose material, and the outline of the concrete shall be within the specified tolerances.

3.1.2 Previously Placed Concrete

3.1.2.1 Preparation of Previously Placed Concrete

Concrete surfaces to which other concrete is to be bonded shall be abraded in an approved manner that will expose sound aggregate uniformly without damaging the concrete. Laitance and loose particles shall be removed. Surfaces shall be thoroughly washed and shall be moist but without free water when concrete is placed.

3.1.3 Vapor Barrier

Vapor barrier shall be provided beneath structural foundation mat. The greatest widths and lengths practicable shall be used to eliminate joints wherever possible. Joints shall be lapped a minimum of 12 inches. Torn, punctured, or damaged vapor barrier material shall be removed and new vapor barrier shall be provided prior to placing concrete. For minor repairs, patches may be made using laps of at least 12 inches. Lapped joints shall be sealed and edges patched with pressure-sensitive adhesive or tape not less than 2 inches wide and compatible with the membrane. Vapor barrier shall be placed directly on underlying subgrade, base course, or capillary water barrier, unless it consists of crushed material or large granular material which could puncture the vapor barrier. In this case, the surface shall be choked with a light layer of sand, as approved, before placing the vapor barrier. A 2 inch layer of compacted, clean concrete sand (fine aggregate) shall be placed on top of the vapor barrier before placing concrete. Concrete placement shall be controlled so as to prevent damage to the vapor barrier, or any covering sand.

3.1.4 Perimeter Insulation

Perimeter insulation shall be installed at locations indicated. Adhesive shall be used where insulation is applied to the interior surface of foundation walls and may be used for exterior application.

3.1.5 Embedded Items

Before placement of concrete, care shall be taken to determine that all embedded items are firmly and securely fastened in place as indicated on the drawings, or required. Conduit and other embedded items shall be clean and free of oil and other foreign matter such as loose coatings or rust, paint, and scale. The embedding of wood in concrete will be permitted only when specifically authorized or directed. Voids in sleeves, inserts, and anchor slots shall be filled temporarily with readily removable materials to prevent the entry of concrete into voids. Welding shall not be performed on embedded metals within 1 feet of the surface of the concrete. Tack welding shall not be performed on or to embedded items.

3.2 CONCRETE PRODUCTION, SMALL PROJECTS

Batch-type equipment shall be used for producing concrete. Ready-mixed

concrete shall be batched, mixed, and transported in accordance with ASTM C 94/C 94M, except as otherwise specified. Truck mixers shall comply with NRMCA TMMB 100. Ready-mix plant equipment and facilities shall be certified in accordance with NRMCA QC 3. Approved batch tickets shall be furnished for each load of ready-mixed concrete. Site-mixed concrete shall be produced in accordance with ACI 301, and plant shall conform to NRMCA CPMB 100.

## 3.3 TRANSPORTING CONCRETE TO PROJECT SITE

Concrete shall be transported to the placing site in truck mixers, .

## 3.4 CONVEYING CONCRETE ON SITE

Concrete shall be conveyed from mixer or transporting unit to forms as rapidly as possible and within the time interval specified by methods which will prevent segregation or loss of ingredients using following equipment. Conveying equipment shall be cleaned before each placement.

### 3.4.1 Buckets

The interior hopper slope shall be not less than 58 degrees from the horizontal, the minimum dimension of the clear gate opening shall be at least 5 times the nominal maximum-size aggregate, and the area of the gate opening shall not be less than 2 square feet.The maximum dimension of the gate opening shall not be greater than twice the minimum dimension. The bucket gates shall be essentially grout tight when closed and may be manually, pneumatically, or hydraulically operated except that buckets larger than 2 cubic yardsshall not be manually operated. The design of the bucket shall provide means for positive regulation of the amount and rate of deposit of concrete in each dumping position.

### 3.4.2 Transfer Hoppers

Concrete may be charged into nonagitating hoppers for transfer to other conveying devices. Transfer hoppers shall be capable of receiving concrete directly from delivery vehicles and shall have conical-shaped discharge features. The transfer hopper shall be equipped with a hydraulically operated gate and with a means of external vibration to effect complete discharge. Concrete shall not be held in nonagitating transfer hoppers more than 30 minutes.

### 3.4.3 Trucks

Truck mixers operating at agitating speed shall conform to the requirements of ASTM C 94/C 94M.

### 3.4.4 Chutes

When concrete can be placed directly from a truck mixer, the chutes normally attached to this equipment by the manufacturer may be used. A discharge deflector shall be used when required by the Contracting Officer. Separate chutes and other similar equipment will not be permitted for conveying concrete.

### 3.4.5 Belt Conveyors

Belt conveyors shall be designed and operated to assure a uniform flow of concrete from mixer to final place of deposit without segregation of

ingredients or loss of mortar and shall be provided with positive means, such as discharge baffle or hopper , for preventing segregation of the concrete at the transfer points and the point of placing. Belt conveyors shall be constructed such that the idler spacing shall not exceed 36 inches. The belt speed shall be a minimum of 300 feet per minute and a maximum of 750 feet per minute. If concrete is to be placed through installed horizontal or sloping reinforcing bars, the conveyor shall discharge concrete into a pipe or elephant truck that is long enough to extend through the reinforcing bars.

### 3.4.6 Concrete Pumps

Concrete may be conveyed by positive displacement pump when approved. The pumping equipment shall be piston or squeeze pressure type; pneumatic placing equipment shall not be used. The pipeline shall be rigid steel pipe or heavy-duty flexible hose. The inside diameter of the pipe shall be at least 3 times the nominal maximum-size coarse aggregate in the concrete mixture to be pumped but not less than 4 inches. Aluminum pipe shall not be used.

## 3.5 PLACING CONCRETE

Mixed concrete shall be discharged within 1-1/2 hours or before the mixer drum has revolved 300 revolutions, whichever comes first after the introduction of the mixing water to the cement and aggregates. When the concrete temperature exceeds 85 degrees F, the time shall be reduced to 45 minutes. Concrete shall be placed within 15 minutes after it has been discharged from the transporting unit. Concrete shall be handled from mixer or transporting unit to forms in a continuous manner until the approved unit of operation is completed. Adequate scaffolding, ramps and walkways shall be provided so that personnel and equipment are not supported by in-place reinforcement. Placing will not be permitted when the sun, heat, wind, or limitations of facilities furnished by the Contractor prevent proper consolidation, finishing and curing. Sufficient placing capacity shall be provided so that concrete can be kept free of cold joints.

### 3.5.1 Depositing Concrete

Concrete shall be deposited as close as possible to its final position in the forms, and there shall be no vertical drop greater than 5 feet except where suitable equipment is provided to prevent segregation and where specifically authorized. Depositing of the concrete shall be so regulated that it will be effectively consolidated in horizontal layers not more than 12 inches thick, except that all slabs shall be placed in a single layer. Concrete to receive other construction shall be screeded to the proper level. Concrete shall be deposited continuously in one layer or in layers so that fresh concrete is deposited on in-place concrete that is still plastic. Fresh concrete shall not be deposited on concrete that has hardened sufficiently to cause formation of seams or planes of weakness within the section. Concrete that has surface dried, partially hardened, or contains foreign material shall not be used. When temporary spreaders are used in the forms, the spreaders shall be removed as their service becomes unnecessary.

### 3.5.2 Consolidation

Immediately after placing, each layer of concrete shall be consolidated by internal vibrators, except for slabs 4 inches thick or less. The vibrators

shall at all times be adequate in effectiveness and number to properly consolidate the concrete; a spare vibrator shall be kept at the jobsite during all concrete placing operations. The vibrators shall have a frequency of not less than 10,000 vibrations per minute, an amplitude of at least 0.025 inch, and the head diameter shall be appropriate for the structural member and the concrete mixture being placed. Vibrators shall be inserted vertically at uniform spacing over the area of placement. The distance between insertions shall be approximately 1-1/2 times the radius of action of the vibrator so that the area being vibrated will overlap the adjacent just-vibrated area by a reasonable amount. The vibrator shall penetrate rapidly to the bottom of the layer and at least 6 inches into the preceding layer if there is such. Vibrator shall be held stationary until the concrete is consolidated and then vertically withdrawn slowly while operating. Form vibrators shall not be used unless specifically approved and unless forms are constructed to withstand their use. Vibrators shall not be used to move concrete within the forms. Slabs 4 inches and less in thickness shall be consolidated by properly designed vibrating screeds or other approved technique. Frequency and amplitude of vibrators shall be determined in accordance with COE CRD-C 521. Grate tampers ("jitterbugs") shall not be used.

### 3.5.3 Cold Weather Requirements

Special protection measures, approved by the Contracting Officer, shall be used if freezing temperatures are anticipated before the expiration of the specified curing period. The ambient temperature of the air where concrete is to be placed and the temperature of surfaces to receive concrete shall be not less than 40 degrees F. The temperature of the concrete when placed shall be not less than 50 degrees F nor more than 75 degrees F. Heating of the mixing water or aggregates will be required to regulate the concrete placing temperature. Materials entering the mixer shall be free from ice, snow, or frozen lumps. Salt, chemicals or other materials shall not be incorporated in the concrete to prevent freezing. Upon written approval, an accelerating admixture conforming to ASTM C 494/C 494M, Type C or E may be used, provided it contains no calcium chloride. Calcium chloride shall not be used.

### 3.5.4 Hot Weather Requirements

When the ambient temperature during concrete placing is expected to exceed 85 degrees F, the concrete shall be placed and finished with procedures previously submitted and as specified herein. The concrete temperature at time of delivery to the forms shall not exceed the temperature shown in the table below when measured in accordance with ASTM C 1064/C 1064M. Cooling of the mixing water or aggregates or placing concrete in the cooler part of the day may be required to obtain an adequate placing temperature. A retarder may be used, as approved, to facilitate placing and finishing. Steel forms and reinforcements shall be cooled as approved prior to concrete placement when steel temperatures are greater than 120 degrees F. Conveying and placing equipment shall be cooled if necessary to maintain proper concrete-placing temperature.

Maximum Allowable Concrete Placing Temperature

| Relative Humidity, Percent, During Time of Concrete Placement | Maximum Allowable Concrete Temperature Degrees |
|---|---|
| Greater than 60 | 90 F |
| 40-60 | 85 F |
| Less than 40 | 80 F |

3.5.5 Prevention of Plastic Shrinkage Cracking

During hot weather with low humidity, and particularly with appreciable wind, as well as interior placements when space heaters produce low humidity, the Contractor shall be alert to the tendency for plastic shrinkage cracks to develop and shall institute measures to prevent this. Particular care shall be taken if plastic shrinkage cracking is potentially imminent and especially if it has developed during a previous placement. Periods of high potential for plastic shrinkage cracking can be anticipated by use of Fig. 2.1.5 of ACI 305R. In addition the concrete placement shall be further protected by erecting shades and windbreaks and by applying fog sprays of water, sprinkling, ponding or wet covering. Plastic shrinkage cracks that occur shall be filled by injection of epoxy resin as directed, after the concrete hardens. Plastic shrinkage cracks shall never be troweled over or filled with slurry.

3.5.6 Placing Concrete in Congested Areas

Special care shall be used to ensure complete filling of the forms, elimination of all voids, and complete consolidation of the concrete when placing concrete in areas congested with reinforcing bars, embedded items, and other tight spacing. An appropriate concrete mixture shall be used, and the nominal maximum size of aggregate (NMSA) shall meet the specified criteria when evaluated for the congested area. Vibrators with heads of a size appropriate for the clearances available shall be used, and the consolidation operation shall be closely supervised to ensure complete and thorough consolidation at all points. Where necessary, splices of reinforcing bars shall be alternated to reduce congestion. Where two mats of closely spaced reinforcing are required, the bars in each mat shall be placed in matching alignment to reduce congestion. Reinforcing bars may be temporarily crowded to one side during concrete placement provided they are returned to exact required location before concrete placement and consolidation are completed.

3.6 JOINTS

3.6.1 Construction Joints

For concrete other than slabs on grade, construction joints shall be located so that the unit of operation does not exceed 60 feet. Concrete shall be placed continuously so that each unit is monolithic in construction. Fresh concrete shall not be placed against adjacent hardened concrete until it is at least 24 hours old. Construction joints shall be located as indicated or approved. Where concrete work is interrupted by

weather, end of work shift or other similar type of delay, location and type of construction joint shall be subject to approval of the Contracting Officer. Unless otherwise indicated and except for slabs on grade, reinforcing steel shall extend through construction joints. Construction joints in the structural foundation mat shall be keyed or doweled as shown. Concrete shall be in place at least 2 hours, or until the concrete begins to lose its plasticity, before placing additional concrete. Prior to placing additional concrete, horizontal construction joints shall be prepared as specified in paragraph Previously Placed Concrete.

### 3.6.2 Waterstops

Waterstops shall be installed in conformance with the locations and details shown on the drawings using materials and procedures specified in Section 03150A EXPANSION JOINTS, CONTRACTION JOINTS, AND WATERSTOPS.

### 3.6.3 Dowels

Dowels shall be installed at the locations shown on the drawings and to the details shown, using materials and procedures specified in Section 03200A CONCRETE REINFORCEMENT and herein. Conventional smooth "paving" dowels shall be installed in slabs using approved methods to hold the dowel in place during concreting within a maximum alignment tolerance of 1/8 inch in 12 inches. Care shall be taken during placing adjacent to and around dowels and tie bars to ensure there is no displacement of the dowel or tie bar and that the concrete completely embeds the dowel and is thoroughly consolidated.

## 3.7 FINISHING FORMED SURFACES

Forms, form materials, and form construction are specified in Section 03100A STRUCTURAL CONCRETE FORMWORK. Finishing of formed surfaces shall be as specified herein. Unless another type of architectural or special finish is specified, surfaces shall be left with the texture imparted by the forms except that defective surfaces shall be repaired. Unless painting of surfaces is required, uniform color of the concrete shall be maintained by use of only one mixture without changes in materials or proportions for any structure or portion of structure that requires a Class A or B finish. Except for major defects, as defined hereinafter, surface defects shall be repaired as specified herein within 24 hours after forms are removed. Repairs of the so-called "plaster-type" will not be permitted in any location. Tolerances of formed surfaces shall conform to the requirements of ACI 117/117R. These tolerances apply to the finished concrete surface, not to the forms themselves; forms shall be set true to line and grade. Form tie holes requiring repair and other defects whose depth is at least as great as their surface diameter shall be repaired as specified in paragraph Damp-Pack Mortar Repair. Defects whose surface diameter is greater than their depth shall be repaired as specified in paragraph Repair of Major Defects. Repairs shall be finished flush with adjacent surfaces and with the same surface texture. The cement used for all repairs shall be a blend of job cement with white cement proportioned so that the final color after curing and aging will be the same as the adjacent concrete. Concrete with excessive honeycomb, or other defects which affect the strength of the member, will be rejected. Repairs shall be demonstrated to be acceptable and free from cracks or loose or drummy areas at the completion of the contract and, for Class A and B Finishes, shall be inconspicuous. Repairs not meeting these requirements will be rejected and shall be replaced.

3.7.1 Class B Finish

Class B finish is required in the following areas: the concrete pipe supports in the pump room. Fins, ravelings, and loose material shall be removed, all surface defects over 1/2 inch in diameter or more than 1/2 inch deep, shall be repaired and, except as otherwise indicated or as specified in Section 03100A STRUCTURAL CONCRETE FORMWORK, holes left by removal of form ties shall be reamed and filled. Defects more than 1/2 inch in diameter shall be cut back to sound concrete, but in all cases at least 1 inch deep. The Contractor shall prepare a sample panel for approval (as specified in PART 1) before commencing repair, showing that the surface texture and color match will be attained.

3.7.2 Class C and Class D Finish

Class C finish is required on concrete surfaces permanently exposed to view that do not require a Class B finish. Class D finish is required on concrete surfaces not permanently exposed to view. Fins, ravelings, and loose material shall be removed, and, except as otherwise indicated or as specified in Section 03100A STRUCTURAL CONCRETE FORMWORK, holes left by removal of form ties shall be reamed and filled. Honeycomb and other defects more than 1/2 inch deep or more than 2 inches in diameter shall be repaired. Defects more than 2 inches in diameter shall be cut back to sound concrete, but in all cases at least 1 inch deep.

3.8 REPAIRS

3.8.1 Damp-Pack Mortar Repair

Form tie holes requiring repair and other defects whose depth is at least as great as their surface diameter but not over 4 inchesshall be repaired by the damp-pack mortar method. Form tie holes shall be reamed and other similar defects shall be cut out to sound concrete. The void shall then be thoroughly cleaned, thoroughly wetted, brush-coated with a thin coat of neat cement grout and filled with mortar. Mortar shall be a stiff mix of 1 part portland cement to 2 parts fine aggregate passing the No. 16 mesh sieve, and minimum amount of water. Only sufficient water shall be used to produce a mortar which, when used, will stick together on being molded into a ball by a slight pressure of the hands and will not exude water but will leave the hands damp. Mortar shall be mixed and allowed to stand for 30 to 45 minutes before use with remixing performed immediately prior to use. Mortar shall be thoroughly tamped in place in thin layers using a hammer and hardwood block. Holes passing entirely through walls shall be completely filled from the inside face by forcing mortar through to the outside face. All holes shall be packed full. Damp-pack repairs shall be moist cured for at least 48 hours.

3.8.2 Repair of Major Defects

Major defects will be considered to be those more than 1/2 inch deep or, for Class A and B finishes, more than 1/2 inch in diameter and, for Class C and D finishes, more than 2 inches in diameter. Also included are any defects of any kind whose depth is over 4 inches or whose surface diameter is greater than their depth. Major defects shall be repaired as specified below.

3.8.2.1 Surface Application of Mortar Repair

Defective concrete shall be removed, and removal shall extend into

completely sound concrete. Approved equipment and procedures which will not cause cracking or microcracking of the sound concrete shall be used. If reinforcement is encountered, concrete shall be removed so as to expose the reinforcement for at least 2 inches on all sides. All such defective areas greater than 12 square inchesshall be outlined by saw cuts at least 1 inch deep. Defective areas less than 12 square inches shall be outlined by a 1 inch deep cut with a core drill in lieu of sawing. All saw cuts shall be straight lines in a rectangular pattern in line with the formwork panels. After concrete removal, the surface shall be thoroughly cleaned by high pressure washing to remove all loose material. Surfaces shall be kept continually saturated for the first 12 of the 24 hours immediately before placing mortar and shall be damp but not wet at the time of commencing mortar placement. The Contractor, at his option, may use either hand-placed mortar or mortar placed with a mortar gun. If hand-placed mortar is used, the edges of the cut shall be perpendicular to the surface of the concrete. The prepared area shall be brush-coated with a thin coat of neat cement grout. The repair shall then be made using a stiff mortar, preshrunk by allowing the mixed mortar to stand for 30 to 45 minutes and then remixed, thoroughly tamped into place in thin layers. If hand-placed mortar is used, the Contractor shall test each repair area for drumminess by firm tapping with a hammer and shall inspect for cracks, both in the presence of the Contracting Officer's representative, immediately before completion of the contract, and shall replace any showing drumminess or cracking. If mortar placed with a mortar gun is used, the gun shall be a small compressed air-operated gun to which the mortar is slowly hand fed and which applies the mortar to the surface as a high-pressure stream, as approved. Repairs made using shotcrete equipment will not be accepted. The mortar used shall be the same mortar as specified for damp-pack mortar repair. If gun-placed mortar is used, the edges of the cut shall be beveled toward the center at a slope of 1:1. All surface applied mortar repairs shall be continuously moist cured for at least 7 days. Moist curing shall consist of several layers of saturated burlap applied to the surface immediately after placement is complete and covered with polyethylene sheeting, all held closely in place by a sheet of plywood or similar material rigidly braced against it. Burlap shall be kept continually wet.

3.8.2.2 Repair of Deep and Large Defects

Deep and large defects will be those that are more than 6 inches deep and also have an average diameter at the surface more than 18 inches or that are otherwise so identified by the Project Office. Deep and large defects shall be reported to the Contracting Officer. Such defects shall be repaired as specified herein or directed, except that defects which affect the strength of the structure shall not be repaired and that portion of the structure shall be completely removed and replaced. Deep and large defects shall be repaired by procedures approved in advance including forming and placing special concrete using applied pressure during hardening. Preparation of the repair area shall be as specified for surface application of mortar. In addition, the top edge (surface) of the repair area shall be sloped at approximately 20 degrees from the horizontal, upward toward the side from which concrete will be placed. The special concrete shall be a concrete mixture with low water content and low slump, and shall be allowed to age 30 to 60 minutes before use. Concrete containing a specified expanding admixture may be used in lieu of the above mixture; the paste portion of such concrete mixture shall be designed to have an expansion between 2.0 and 4.0 percent when tested in accordance with ASTM C 940. A full width "chimney" shall be provided at the top of the form on the placing side to ensure filling to the top of the opening.

A pressure cap shall be used on the concrete in the chimney with simultaneous tightening and revibrating the form during hardening to ensure a tight fit for the repair. The form shall be removed after 24 hours and immediately the chimney shall be carefully chipped away to avoid breaking concrete out of the repair; the surface of the repair concrete shall be dressed as required.

## 3.9 FINISHING UNFORMED SURFACES

The finish of all unformed surfaces shall meet the requirements of paragraph Tolerances in PART 1, when tested as specified herein.

### 3.9.1 General

The ambient temperature of spaces adjacent to unformed surfaces being finished and of the base on which concrete will be placed shall be not less than 50 degrees F. In hot weather all requirements of paragraphs Hot Weather Requirements and Prevention of Plastic Shrinkage Cracking shall be met. Unformed surfaces that are not to be covered by additional concrete or backfill shall have a float finish, with additional finishing as specified below, and shall be true to the elevation shown on the drawings. Surfaces to receive additional concrete or backfill shall be brought to the elevation shown on the drawings, properly consolidated, and left true and regular. Unless otherwise shown on the drawings, exterior surfaces shall be sloped for drainage, as directed. Where drains are provided, interior floors shall be evenly sloped to the drains. Joints shall be carefully made with a jointing or edging tool. The finished surfaces shall be protected from stains or abrasions. Grate tampers or "jitterbugs" shall not be used for any surfaces. The dusting of surfaces with dry cement or other materials or the addition of any water during finishing shall not be permitted. If bleedwater is present prior to finishing, the excess water shall be carefully dragged off or removed by absorption with porous materials such as burlap. During finishing operations, extreme care shall be taken to prevent over finishing or working water into the surface; this can cause "crazing" (surface shrinkage cracks which appear after hardening) of the surface. Any slabs with surfaces which exhibit significant crazing shall be removed and replaced. During finishing operations, surfaces shall be checked with a 10 foot straightedge, applied in both directions at regular intervals while the concrete is still plastic, to detect high or low areas.

### 3.9.2 Rough Slab Finish

As a first finishing operation for unformed surfaces, the surface shall receive a rough slab finish prepared as follows. The concrete shall be uniformly placed across the slab area, consolidated as previously specified, and then screeded with straightedge strikeoffs immediately after consolidation to bring the surface to the required finish level with no coarse aggregate visible. Side forms and screed rails shall be provided, rigidly supported, and set to exact line and grade. Allowable tolerances for finished surfaces apply only to the hardened concrete, not to forms or screed rails. Forms and screed rails shall be set true to line and grade. "Wet screeds" shall not be used.

### 3.9.3 Floated Finish

Slabs to receive more than a rough slab finish shall next be given a wood float finish. The screeding shall be followed immediately by darbying or bull floating before bleeding water is present, to bring the surface to a

true, even plane. Then, after the concrete has stiffened so that it will withstand a man's weight without imprint of more than 1/4 inch and the water sheen has disappeared, it shall be floated to a true and even plane free of ridges. Floating shall be performed by use of suitable hand floats or power driven equipment. Sufficient pressure shall be used on the floats to bring a film of moisture to the surface. Hand floats shall be made of wood, magnesium, or aluminum. Lightweight concrete or concrete that exhibits stickiness shall be floated with a magnesium float. Care shall be taken to prevent over-finishing or incorporating water into the surface.

### 3.9.4 Troweled Finish

All interior slabs except the ramps at east side of the pump house shall be given a trowel finish. After floating is complete and after the surface moisture has disappeared, unformed surfaces shall be steel-troweled to a smooth, even, dense finish, free from blemishes including trowel marks. In lieu of hand finishing, an approved power finishing machine may be used in accordance with the directions of the machine manufacturer. Additional trowelings shall be performed, either by hand or machine until the surface has been troweled 3 times, with waiting period between each. Care shall be taken to prevent blistering and if such occurs, troweling shall immediately be stopped and operations and surfaces corrected. A final hard steel troweling shall be done by hand, with the trowel tipped, and using hard pressure, when the surface is at a point that the trowel will produce a ringing sound. The finished surface shall be thoroughly consolidated and shall be essentially free of trowel marks and be uniform in texture and appearance. The concrete mixture used for troweled finished areas shall be adjusted, if necessary, in order to provide sufficient fines (cementitious material and fine sand) to finish properly.

### 3.9.5 Non-Slip Finish

Non-slip floors shall be constructed in accordance with the following subparagraphs.

#### 3.9.5.1 Broomed

The interior ramps at the east side of the pump house and exterior stops shall be given a broomed finish. After floating, the surface shall be lightly steel troweled, and then carefully scored by pulling a coarse fiber push-type broom across the surface. Brooming shall be transverse to traffic or at right angles to the slope of the slab. After the end of the curing period, the surface shall be vigorously broomed with a coarse fiber broom to remove all loose or semi-detached particles.

## 3.10 FLOOR HARDENER

The pump room portion of the structural foundation mat shall be treated with floor hardener. Floor hardener shall be applied after the concrete has been cured and then air dried for 14 days. Three coats shall be applied, each the day after the preceding coat was applied. For the first application, one pound of the silocofluoride shall be dissolved in one gallon of water. For subsequent applications, the solution shall be two pounds of silicofluoride to each gallon of water. Floor should be mopped with clear water shortly after the preceding application has dried to remove encrusted salts. Proprietary hardeners shall be applied in accordance with the manufacturer's instructions. During application, area should be well ventilated. Precautions shall be taken when applying silicofluorides due to the toxicity of the salts. Any compound that

contacts glass or aluminum should be immediately removed with clear water.

## 3.11 CURING AND PROTECTION

### 3.11.1 General

Concrete shall be cured by an approved method for the period of time given below:

| | |
|---|---|
| All concrete | 7 days |

Immediately after placement, concrete shall be protected from premature drying, extremes in temperatures, rapid temperature change, mechanical injury and damage from rain and flowing water for the duration of the curing period. Air and forms in contact with concrete shall be maintained at a temperature above 50 degrees F for the first 3 days and at a temperature above 32 degrees F for the remainder of the specified curing period. Exhaust fumes from combustion heating units shall be vented to the outside of the enclosure, and heaters and ducts shall be placed and directed so as not to cause areas of overheating and drying of concrete surfaces or to create fire hazards. Materials and equipment needed for adequate curing and protection shall be available and at the site prior to placing concrete. No fire or excessive heat, including welding, shall be permitted near or in direct contact with the concrete at any time. Except as otherwise permitted by paragraph Membrane Forming Curing Compounds, moist curing shall be provided for any areas to receive floor hardener, any paint or other applied coating, or to which other concrete is to be bonded.

### 3.11.2 Moist Curing

Concrete to be moist-cured shall be maintained continuously wet for the entire curing period, commencing immediately after finishing. If water or curing materials used stain or discolor concrete surfaces which are to be permanently exposed, the concrete surfaces shall be cleaned as approved. When wooden forms are left in place during curing, they shall be kept wet at all times. If steel forms are used in hot weather, nonsupporting vertical forms shall be broken loose from the concrete soon after the concrete hardens and curing water continually applied in this void. If the forms are removed before the end of the curing period, curing shall be carried out as on unformed surfaces, using suitable materials. Surfaces shall be cured by ponding, by continuous sprinkling, by continuously saturated burlap or cotton mats, or by continuously saturated plastic coated burlap. Burlap and mats shall be clean and free from any contamination and shall be completely saturated before being placed on the concrete. The Contractor shall have an approved work system to ensure that moist curing is continuous 24 hours per day.

### 3.11.3 Membrane Forming Curing Compounds

Concrete may be cured with a nonpigmented curing compound containing a fugitive dye in lieu of moist curing. Membrane curing shall not be used on surfaces that are to receive any subsequent treatment depending on adhesion or bonding to the concrete, including surfaces to which a smooth finish is to be applied or other concrete to be bonded. However, a styrene acrylate or chlorinated rubber compound meeting ASTM C 309, Class B requirements, may be used for surfaces which are to be painted or are to receive bituminous roofing or waterproofing, or floors that are to receive adhesive applications of resilient flooring. The curing compound selected shall be compatible with any subsequent paint, roofing, waterproofing or flooring

specified. Membrane curing compound shall not be used on surfaces that are maintained at curing temperatures with free steam. Curing compound shall be applied to formed surfaces immediately after the forms are removed and prior to any patching or other surface treatment except the cleaning of loose sand, mortar, and debris from the surface. All surfaces shall be thoroughly moistened with water. Curing compound shall be applied to slab surfaces as soon as the bleeding water has disappeared, with the tops of joints being temporarily sealed to prevent entry of the compound and to prevent moisture loss during the curing period. The curing compound shall be applied in a two-coat continuous operation by approved motorized power-spraying equipment operating at a minimum pressure of 75 psi, at a uniform coverage of not more than 400 square feet per gallon for each coat, and the second coat shall be applied perpendicular to the first coat. Concrete surfaces which have been subjected to rainfall within 3 hours after curing compound has been applied shall be resprayed by the method and at the coverage specified. Surfaces on which clear compound is used shall be shaded from direct rays of the sun for the first 3 days. Surfaces coated with curing compound shall be kept free of foot and vehicular traffic, and from other sources of abrasion and contamination during the curing period.

### 3.11.4 Impervious Sheeting

Except for plastic coated burlap, impervious sheeting alone shall not be used for curing. Impervious-sheet curing shall only be used on horizontal or nearly horizontal surfaces. Surfaces shall be thoroughly wetted and be completely covered with the sheeting. Sheeting shall be at least 18 inches wider than the concrete surface to be covered. Covering shall be laid with light-colored side up. Covering shall be lapped not less than 12 inches and securely weighted down or shall be lapped not less than 4 inches and taped to form a continuous cover with completely closed joints. The sheet shall be weighted to prevent displacement so that it remains in contact with the concrete during the specified length of curing. Coverings shall be folded down over exposed edges of slabs and secured by approved means. Sheets shall be immediately repaired or replaced if tears or holes appear during the curing period.

### 3.11.5 Ponding or Immersion

Concrete shall be continually immersed throughout the curing period. Water shall not be more than 20 degrees F less than the temperature of the concrete.

### 3.11.6 Cold Weather Curing and Protection

When the daily ambient low temperature is less than 32 degrees F the temperature of the concrete shall be maintained above 40 degrees F for the first seven days after placing. During the period of protection removal, the air temperature adjacent to the concrete surfaces shall be controlled so that concrete near the surface will not be subjected to a temperature differential of more than 25 degrees F as determined by suitable temperature measuring devices furnished by the Contractor, as required, and installed adjacent to the concrete surface and 2 inches inside the surface of the concrete. The installation of the thermometers shall be made by the Contractor as directed.

## 3.12 SETTING BASE PLATES AND BEARING PLATES

After being properly positioned, column base plates, bearing plates for

beams and similar structural members, and machinery and equipment base plates shall be set to the proper line and elevation with damp-pack bedding mortar. The thickness of the mortar or grout shall be approximately 1/24 the width of the plate, but not less than 3/4 inch. Concrete and metal surfaces in contact with grout shall be clean and free of oil and grease, and concrete surfaces in contact with grout shall be damp and free of laitance when grout is placed.

### 3.12.1 Damp-Pack Bedding Mortar

Damp-pack bedding mortar shall consist of 1 part cement and 2-1/2 parts fine aggregate having water content such that a mass of mortar tightly squeezed in the hand will retain its shape but will crumble when disturbed. The space between the top of the concrete and bottom of the bearing plate or base shall be packed with the bedding mortar by tamping or ramming with a bar or rod until it is completely filled.

## 3.13 TESTING AND INSPECTION FOR CONTRACTOR QUALITY CONTROL

The Contractor shall perform the inspection and tests described below and, based upon the results of these inspections and tests, shall take the action required and shall submit specified reports. When, in the opinion of the Contracting Officer, the concreting operation is out of control, concrete placement shall cease and the operation shall be corrected. The laboratory performing the tests shall be onsite and shall conform with ASTM C 1077. Materials may be subjected to check testing by the Government from samples obtained at the manufacturer, at transfer points, or at the project site.

### 3.13.1 Concrete Mixture

a. Air Content Testing. Air content tests shall be made when test specimens are fabricated. In addition, at least two tests for air content shall be made on randomly selected batches of each separate concrete mixture produced during each 8-hour period of concrete production. Additional tests shall be made when excessive variation in workability is reported by the placing foreman or Government inspector. Tests shall be made in accordance with ASTM C 231 for normal weight concrete. Test results shall be plotted on control charts which shall at all times be readily available to the Government and shall be submitted weekly. Copies of the current control charts shall be kept in the field by testing crews and results plotted as tests are made. When a single test result reaches either the upper or lower action limit, a second test shall immediately be made. The results of the two tests shall be averaged and this average used as the air content of the batch to plot on both the air content and the control chart for range, and for determining need for any remedial action. The result of each test, or average as noted in the previous sentence, shall be plotted on a separate control chart for each mixture on which an "average line" is set at the midpoint of the specified air content range from paragraph Air Entrainment. An upper warning limit and a lower warning limit line shall be set 1.0 percentage point above and below the average line, respectively. An upper action limit and a lower action limit line shall be set 1.5 percentage points above and below the average line, respectively. The range between each two consecutive tests shall be plotted on a secondary control chart for range where an upper warning limit is set at 2.0 percentage

points and an upper action limit is set at 3.0 percentage points. Samples for air content may be taken at the mixer, however, the Contractor is responsible for delivering the concrete to the placement site at the stipulated air content. If the Contractor's materials or transportation methods cause air content loss between the mixer and the placement, correlation samples shall be taken at the placement site as required by the Contracting Officer, and the air content at the mixer controlled as directed.

b. Air Content Corrective Action. Whenever points on the control chart for percent air reach either warning limit, an adjustment shall immediately be made in the amount of air-entraining admixture batched. As soon as practical after each adjustment, another test shall be made to verify the result of the adjustment. Whenever a point on the secondary control chart for range reaches the warning limit, the admixture dispenser shall be recalibrated to ensure that it is operating accurately and with good reproducibility. Whenever a point on either control chart reaches an action limit line, the air content shall be considered out of control and the concreting operation shall immediately be halted until the air content is under control. Additional air content tests shall be made when concreting is restarted.

c. Slump Testing. In addition to slump tests which shall be made when test specimens are fabricated, at least four slump tests shall be made on randomly selected batches in accordance with ASTM C 143/C 143M for each separate concrete mixture produced during each 8-hour or less period of concrete production each day. Also, additional tests shall be made when excessive variation in workability is reported by the placing foreman or Government inspector. Test results shall be plotted on control charts which shall at all times be readily available to the Government and shall be submitted weekly. Copies of the current control charts shall be kept in the field by testing crews and results plotted as tests are made. When a single slump test reaches or goes beyond either the upper or lower action limit, a second test shall immediately be made. The results of the two tests shall be averaged and this average used as the slump of the batch to plot on both the control charts for slump and the chart for range, and for determining need for any remedial action. Limits shall be set on separate control charts for slump for each type of mixture. The upper warning limit shall be set at 1/2 inch below the maximum allowable slump specified in paragraph Slump in PART 1 for each type of concrete and an upper action limit line and lower action limit line shall be set at the maximum and minimum allowable slumps, respectively, as specified in the same paragraph. The range between each consecutive slump test for each type of mixture shall be plotted on a single control chart for range on which an upper action limit is set at 2 inches. Samples for slump shall be taken at the mixer. However, the Contractor is responsible for delivering the concrete to the placement site at the stipulated slump. If the Contractor's materials or transportation methods cause slump loss between the mixer and the placement, correlation samples shall be taken at the placement site as required by the Contracting Officer, and the slump at the mixer controlled as directed.

d. Slump Corrective Action. Whenever points on the control charts for slump reach the upper warning limit, an adjustment shall

immediately be made in the batch weights of water and fine aggregate. The adjustments are to be made so that the total water content does not exceed that amount allowed by the maximum w/c ratio specified, based on aggregates which are in a saturated surface dry condition. When a single slump reaches the upper or lower action limit, no further concrete shall be delivered to the placing site until proper adjustments have been made. Immediately after each adjustment, another test shall be made to verify the correctness of the adjustment. Whenever two consecutive individual slump tests, made during a period when there was no adjustment of batch weights, produce a point on the control chart for range at or above the upper action limit, the concreting operation shall immediately be halted, and the Contractor shall take appropriate steps to bring the slump under control. Additional slump tests shall be made as directed.

e. Temperature. The temperature of the concrete shall be measured when compressive strength specimens are fabricated. Measurement shall be in accordance with ASTM C 1064/C 1064M. The temperature shall be reported along with the compressive strength data.

f. Strength Specimens. At least one set of test specimens shall be made, for compressive strength, on each different concrete mixture placed during the day for each 500 cubic yards or portion thereof of that concrete mixture placed each day. Additional sets of test specimens shall be made, as directed by the Contracting Officer, when the mixture proportions are changed or when low strengths have been detected. A truly random (not haphazard) sampling plan shall be developed by the Contractor and approved by the Contracting Officer prior to the start of construction. The plan shall assure that sampling is done in a completely random and unbiased manner. A set of test specimens for concrete with a 28-day specified strength per paragraph Strength Requirements in PART 1 shall consist of four specimens, two to be tested at 7 days and two at 28 days. Test specimens shall be molded and cured in accordance with ASTM C 31/C 31M and tested in accordance with ASTM C 39/C 39M for test cylinders and ASTM C 78 for test beams. Results of all strength tests shall be reported immediately to the Contracting Officer. Quality control charts shall be kept for individual strength "tests", ("test" as defined in paragraph Strength Requirements in PART 1) moving average of last 3 "tests" for strength, and moving average for range for the last 3 "tests" for each mixture. The charts shall be similar to those found in ACI 214.3R.

### 3.13.2 Inspection Before Placing

Foundations, construction joints, forms, and embedded items shall be inspected by the Contractor in sufficient time prior to each concrete placement in order to certify to the Contracting Officer that they are ready to receive concrete. The results of each inspection shall be reported in writing.

### 3.13.3 Placing

The placing foreman shall supervise placing operations, shall determine that the correct quality of concrete or grout is placed in each location as specified and as directed by the Contracting Officer, and shall be responsible for measuring and recording concrete temperatures and ambient

temperature hourly during placing operations, weather conditions, time of placement, volume placed, and method of placement. The placing foreman shall not permit batching and placing to begin until it has been verified that an adequate number of vibrators in working order and with competent operators are available. Placing shall not be continued if any pile of concrete is inadequately consolidated. If any batch of concrete fails to meet the temperature requirements, immediate steps shall be taken to improve temperature controls.

3.13.4 Curing Inspection

a. Moist Curing Inspections. At least once each shift, and not less than twice per day on both work and non-work days, an inspection shall be made of all areas subject to moist curing. The surface moisture condition shall be noted and recorded.

b. Moist Curing Corrective Action. When a daily inspection report lists an area of inadequate curing, immediate corrective action shall be taken, and the required curing period for those areas shall be extended by 1 day.

c. Membrane Curing Inspection. No curing compound shall be applied until the Contractor has verified that the compound is properly mixed and ready for spraying. At the end of each operation, the Contractor shall estimate the quantity of compound used by measurement of the container and the area of concrete surface covered, shall compute the rate of coverage in square feet per gallon, and shall note whether or not coverage is uniform.

d. Membrane Curing Corrective Action. When the coverage rate of the curing compound is less than that specified or when the coverage is not uniform, the entire surface shall be sprayed again.

e. Sheet Curing Inspection. At least once each shift and once per day on non-work days, an inspection shall be made of all areas being cured using impervious sheets. The condition of the covering and the tightness of the laps and tapes shall be noted and recorded.

f. Sheet Curing Corrective Action. When a daily inspection report lists any tears, holes, or laps or joints that are not completely closed, the tears and holes shall promptly be repaired or the sheets replaced, the joints closed, and the required curing period for those areas shall be extended by 1 day.

3.13.5 Cold-Weather Protection

At least once each shift and once per day on non-work days, an inspection shall be made of all areas subject to cold-weather protection. Any deficiencies shall be noted, corrected, and reported.

3.13.6 Reports

All results of tests or inspections conducted shall be reported informally as they are completed and in writing daily. A weekly report shall be prepared for the updating of control charts covering the entire period from the start of the construction season through the current week. During periods of cold-weather protection, reports of pertinent temperatures shall be made daily. These requirements do not relieve the Contractor of the

obligation to report certain failures immediately as required in preceding paragraphs. Such reports of failures and the action taken shall be confirmed in writing in the routine reports. The Contracting Officer has the right to examine all contractor quality control records.

-- End of Section --

SECTION TABLE OF CONTENTS

DIVISION 04 - MASONRY

SECTION 04200

MASONRY

**08/02**

PART 1 GENERAL

1.1 REFERENCES
1.2 SUBMITTALS
1.3 DELIVERY, HANDLING, AND STORAGE
1.3.1 Masonry Units
1.3.2 Reinforcement
1.3.3 Cementitious Materials, Sand and Aggregates

PART 2 PRODUCTS

2.1 GENERAL REQUIREMENTS
2.2 CONCRETE MASONRY UNITS (CMU)
2.2.1 Kinds and Shapes
2.2.2 Fire-Rated CMU
2.3 PRECAST CONCRETE ITEMS
2.3.1 Splash Blocks
2.4 MORTAR
2.4.1 Admixtures for Masonry Mortar
2.4.2 Sand and Water
2.5 GROUT
2.5.1 Admixtures
2.5.2 Grout Barriers
2.6 BAR POSITIONERS
2.6.1 Bar Positioners
2.7 JOINT REINFORCEMENT
2.8 REINFORCING STEEL BARS AND RODS
2.9 INSULATION
2.9.1 Rigid Board-Type Insulation
2.9.1.1 Insulation Thickness
2.9.1.2 Aged R-Value
2.9.1.3 Recovered Material
2.9.2 Insulation Adhesive
2.10 EXPANSION-JOINT MATERIALS
2.11 FLASHING

PART 3 EXECUTION

3.1 ENVIRONMENTAL REQUIREMENTS
3.1.1 Hot Weather Installation
3.1.2 Cold Weather Installation
3.1.2.1 Preparation
3.1.2.2 Completed Masonry and Masonry Not Being Worked On
3.2 LAYING MASONRY UNITS
3.2.1 Surface Preparation
3.2.2 Forms and Shores

3.2.3 Concrete Masonry Units
3.2.4 Tolerances
3.2.5 Cutting and Fitting
3.2.6 Jointing
3.2.6.1 Flush Joints
3.2.6.2 Tooled Joints
3.2.6.3 Door and Window Frame Joints
3.2.7 Joint Widths
3.2.7.1 Concrete Masonry Units
3.2.8 Embedded Items
3.2.9 Unfinished Work
3.2.10 Masonry Wall Intersections
3.3 MORTAR
3.4 REINFORCING STEEL
3.4.1 Positioning Bars
3.4.2 Splices
3.5 JOINT REINFORCEMENT INSTALLATION
3.6 PLACING GROUT
3.6.1 Vertical Grout Barriers for Fully Grouted Walls
3.6.2 Horizontal Grout Barriers
3.6.3 Cleanouts
3.6.3.1 Cleanouts for Hollow Unit Masonry Construction
3.6.4 Grouting Equipment
3.6.4.1 Grout Pumps
3.6.4.2 Vibrators
3.6.5 Grout Placement
3.6.5.1 Low-Lift Method
3.6.5.2 High-Lift Method
3.7 BOND BEAMS
3.8 CONTROL JOINTS
3.9 LINTELS
3.9.1 Masonry Lintels
3.10 INSULATION
3.11 SPLASH BLOCKS
3.12 POINTING AND CLEANING
3.12.1 Concrete Masonry Unit and Concrete Brick Surfaces
3.13 BEARING PLATES
3.14 PROTECTION
3.15 TEST REPORTS
3.15.1 Field Testing of Mortar
3.15.2 Field Testing of Grout

-- End of Section Table of Contents --

SECTION 04200

MASONRY
**08/02**

PART 1 GENERAL

1.1 REFERENCES

The publications listed below form a part of this specification to the extent referenced. The publications are referred to within the text by basic designation only.

ACI INTERNATIONAL (ACI)

| | |
|---|---|
| ACI SP-66 | (1994) ACI Detailing Manual |

ASTM INTERNATIONAL (ASTM)

| | |
|---|---|
| ASTM A 82 | (2001) Steel Wire, Plain, for Concrete Reinforcement |
| ASTM A 153/A 153M | (2001a) Zinc Coating (Hot-Dip) on Iron and Steel Hardware |
| ASTM A 615/A 615M | (2001b) Deformed and Plain Billet-Steel Bars for Concrete Reinforcement |
| ASTM C 144 | (2002) Aggregate for Masonry Mortar |
| ASTM C 90 | (2002) Loadbearing Concrete Masonry Units |
| ASTM C 91 | (2001) Masonry Cement |
| ASTM C 140 | (2001ae1) Sampling and Testing Concrete Masonry Units and Related Units |
| ASTM C 270 | (2001a) Mortar for Unit Masonry |
| ASTM C 476 | (2001) Grout for Masonry |
| ASTM C 494/C 494M | (1999ae1) Chemical Admixtures for Concrete |
| ASTM C 578 | (2001) Rigid, Cellular Polystyrene Thermal Insulation |
| ASTM C 780 | (2000) Preconstruction and Construction Evaluation of Mortars for Plain and Reinforced Unit Masonry |
| ASTM C 1019 | (2000b) Sampling and Testing Grout |
| ASTM C 1072 | (2000a) Measurement of Masonry Flexural Bond Strength |
| ASTM C 1289 | (2001) Faced Rigid Cellular |

Polyisocyanurate Thermal Insulation Board

1.2 SUBMITTALS

Government approval is required for submittals with a "G" designation; submittals not having a "G" designation are for information only or as otherwise designated. When used, a designation following the "G" designation identifies the office that will review the submittal for the Government. The following shall be submitted in accordance with Section 01330 SUBMITTAL PROCEDURES:

SD-02 Shop Drawings

Masonry Work; G, AE,

Drawings including plans, elevations, and details of wall reinforcement; details of reinforcing bars at corners and wall intersections; offsets; tops, bottoms, and ends of walls; control joints; and wall openings. Bar splice locations shall be shown. Bent bars shall be identified on a bending diagram and shall be referenced and located on the drawings. Wall dimensions, bar clearances, and wall openings greater than one masonry unit in area shall be shown. No approval will be given to the shop drawings until the Contractor certifies that all openings, including those for mechanical and electrical service, are shown. If, during construction, additional masonry openings are required, the approved shop drawings shall be resubmitted with the additional openings shown along with the proposed changes. Location of these additional openings shall be clearly highlighted. The minimum scale for wall elevations shall be 1/4 inch per foot. Reinforcement bending details shall conform to the requirements of ACI SP-66.

SD-03 Product Data

Concrete Masonry Units (CMU)

SD-04 Samples

Concrete Masonry Units (CMU); G, AO

Bar Positioners; G, AO

Two of each type used.

Joint Reinforcement; G, AO

One piece of each type used, including corner and wall intersection pieces, showing at least two cross wires.

Insulation; G, AO

One piece of board type insulation, not less than 16 by 24 inches in size, containing the label indicating the rated permeance and R-values.

SD-05 Design Data

SD-06 Test Reports

Field Testing of Mortar; G, AO
Field Testing of Grout; G, AO

Fire-rated CMU; G, AO

Test reports from an approved independent laboratory. Test reports on a previously tested material shall be certified as the same as that proposed for use in this project.

SD-07 Certificates

Concrete Masonry Units (CMU)
Bar Positioners
Joint Reinforcement
Reinforcing Steel Bars and Rods

Insulation
Admixtures for Masonry Mortar

Certificates of compliance stating that the materials meet the specified requirements.

Insulation

Certificate attesting that the polyurethane or polyisocyanurate insulation furnished for the project contains recovered material, and showing an estimated percent of such recovered material.

## 1.3 DELIVERY, HANDLING, AND STORAGE

Materials shall be delivered, handled, stored, and protected to avoid chipping, breakage, and contact with soil or contaminating material.

### 1.3.1 Masonry Units

Concrete masonry units shall be covered or protected from inclement weather.

### 1.3.2 Reinforcement

Steel reinforcing bars and joint reinforcement shall be stored above the ground. Steel reinforcing bars and uncoated ties shall be free of loose mill scale and rust.

### 1.3.3 Cementitious Materials, Sand and Aggregates

Cementitious and other packaged materials shall be delivered in unopened containers, plainly marked and labeled with manufacturers' names and brands. Cementitious material shall be stored in dry, weathertight enclosures or be completely covered. Cement shall be handled in a manner that will prevent the inclusion of foreign materials and damage by water or dampness. Sand and aggregates shall be stored in a manner to prevent contamination or segregation.

PART 2 PRODUCTS

2.1 GENERAL REQUIREMENTS

The source of materials which will affect the appearance of the finished work shall not be changed after the work has started except with Contracting Officer's approval.

2.2 CONCRETE MASONRY UNITS (CMU)

Hollow and solid concrete masonry units shall conform to ASTM C 90. Cement shall have a low alkali content and be of one brand.

a. Hollow Load-Bearing Units: ASTM C 90, Type I or II, made with normal weight aggregate. Provide load-bearing units for exterior walls, foundation walls, load-bearing walls, and shear walls.

b. The following types of concrete masonry units shall be provided in locations indicated on exterior elevations:
   * Standard (CMU).

2.2.1 Kinds and Shapes

Units shall be modular in size and shall include closer, jamb, header, lintel, and bond beam units and special shapes and sizes to complete the work as indicated. Units used in exposed masonry surfaces in any one building shall have a uniform fine to medium texture and a uniform color.

2.2.2 Fire-Rated CMU

Concrete masonry units used in fire-rated construction shown on the drawings shall be of minimum equivalent thickness for the fire rating indicated and the corresponding type of aggregates indicated in TABLE I. Units containing more than one of the aggregates listed in TABLE I will be rated on the aggregate requiring the greater minimum equivalent thickness to produce the required fire rating.

TABLE I

FIRE-RATED CONCRETE MASONRY UNITS

See note (a) below

| Aggregate Type | Minimum equivalent thickness inches for fire rating of: 4 hours | 3 hours | 2 hours |
|---|---|---|---|
| Pumice | 4.7 | 4.0 | 3.0 |
| Expanded slag | 5.0 | 4.2 | 3.3 |
| Expanded clay, shale, or slate | 5.7 | 4.8 | 3.7 |
| Limestone, scoria, cinders or unexpanded slag | 5.9 | 5.0 | 4.0 |

TABLE I

FIRE-RATED CONCRETE MASONRY UNITS

See note (a) below

| | | | |
|---|---|---|---|
| Calcareous gravel | 6.2 | 5.3 | 4.2 |
| Siliceous gravel | 6.7 | 5.7 | 4.5 |

(a) Minimum equivalent thickness shall equal net volume as determined in conformance with ASTM C 140 divided by the product of the actual length and height of the face shell of the unit in inches. Where walls are to receive plaster or be faced with brick, or otherwise form an assembly; the thickness of plaster or brick or other material in the assembly will be included in determining the equivalent thickness.

## 2.3 PRECAST CONCRETE ITEMS

Splashblocks shall be factory-made units from a plant regularly engaged in producing precast concrete units. Unless otherwise indicated, concrete shall be 3000 psi minimum conforming to Section 03300 CAST-IN-PLACE STRUCTURAL CONCRETE using 1/2 inch to No. 4 nominal-size coarse aggregate, and minimum reinforcement shall be the reinforcement required for handling of the units. Clearance of 3/4 inch shall be maintained between reinforcement and faces of units. Unless precast-concrete items have been subjected during manufacture to saturated-steam pressure of at least 120 psi for at least 5 hours, the items, after casting, shall be either damp-cured for 24 hours or steam-cured and shall then be aged under cover for 28 days or longer. Exposed-to-view surfaces shall be free of surface voids, spalls, cracks, and chipped or broken edges. Precast units exposed-to-view shall be of uniform appearance and color.

### 2.3.1 Splash Blocks

Splash blocks shall be as detailed. Reinforcement shall be the manufacturer's standard.

## 2.4 MORTAR

Mortar shall be Type S in accordance with the proportion specification of ASTM C 270 except Type S cement-lime mortar proportions shall be 1 part cement, 1/2 part lime and 4-1/2 parts aggregate; when masonry cement ASTM C 91 is used the maximum air content shall be limited to 12 percent and performance equal to cement-lime mortar shall be verified. Verification of masonry cement performance shall be based on ASTM C 780 and ASTM C 1072.

### 2.4.1 Admixtures for Masonry Mortar

In cold weather, a non-chloride based accelerating admixture may be used subject to approval. Accelerating admixture shall be non-corrosive, shall contain less than 0.2 percent chlorides, and shall conform to ASTM C 494/C 494M, Type C.

### 2.4.2 Sand and Water

Sand shall conform to ASTM C 144. Water shall be clean, potable, and free

from substances which could adversely affect the mortar.

## 2.5 GROUT

Grout shall conform to ASTM C 476, fine . Cement used in grout shall have a low alkali content. Grout slump shall be between 8 and 10 inches. Minimum grout strength shall be 2000 psi in 28 days, as tested by ASTM C 1019. Grout shall be used subject to the limitations of Table III. Proportions shall not be changed and materials with different physical or chemical characteristics shall not be used in grout for the work unless additional evidence is furnished that the grout meets the specified requirements.

### 2.5.1 Admixtures

In cold weather, a non-chloride based accelerating admixture may be used subject to approval; accelerating admixture shall be non-corrosive, shall contain less than 0.2 percent chlorides, and shall conform to ASTM C 494/C 494M, Type C.

### 2.5.2 Grout Barriers

Grout barriers for vertical cores shall consist of fine mesh wire, fiberglass, or expanded metal.

## 2.6 BAR POSITIONERS

### 2.6.1 Bar Positioners

Bar positioners, used to prevent displacement of reinforcing bars during the course of construction, shall be factory fabricated from 9 gauge steel wire or equivalent, and coated with a hot-dip galvanized finish. Not more than one wire shall cross the cell.

## 2.7 JOINT REINFORCEMENT

Joint reinforcement shall be factory fabricated from steel wire conforming to ASTM A 82, welded construction. Tack welding will not be acceptable in reinforcement used for wall ties. Wire shall have zinc coating conforming to ASTM A 153/A 153M, Class B-2. All wires shall be a minimum of 9 gauge. Reinforcement shall be ladder type design, having one longitudinal wire in the mortar bed of each face shell for hollow units and one wire for solid units. Joint reinforcement shall be placed a minimum of 5/8 inch cover from either face. The distance between crosswires shall not exceed 16 inches. Joint reinforcement for straight runs shall be furnished in flat sections not less than 10 feet long. Joint reinforcement shall be provided with factory formed corners and intersections.

## 2.8 REINFORCING STEEL BARS AND RODS

Reinforcing steel bars and rods shall conform to ASTM A 615/A 615M, Grade 60.

## 2.9 INSULATION

### 2.9.1 Rigid Board-Type Insulation

Rigid board-type insulation shall be extruded polystyrene, polyurethane, or polyisocyanurate. Polystyrene shall conform to ASTM C 578. Polyisocyanurate shall conform to ASTM C 1289, Type I, Class 1 or 2, faced

with aluminum foil on both sides of the foam. The insulation shall be a standard product and shall be marked with not less than the manufacturer's trademark or name, the specification number, the permeance and R-values.

2.9.1.1 Insulation Thickness

The insulation space shall allow for a maximum insulation thickness of 2 inches.

2.9.1.2 Aged R-Value

The insulation shall provide a minimum aged R-value of 10 for the overall thickness. The aged R-value shall be determined at 75 degrees F in accordance with the appropriate referenced specification. The stated R-value of the insulation shall be certified by an independent testing laboratory or certified by an independent Registered Professional Engineer if tests are conducted in the manufacturer's laboratory.

2.9.1.3 Recovered Material

Contractor shall comply with EPA requirements in accordance with Section 01670 RECYCLED / RECOVERD MATERIALS. The polyurethane or polyisocyanurate foam shall have a minimum recovered material content of 9 percent by weight of the core material.

2.9.2 Insulation Adhesive

Insulation adhesive shall be specifically prepared to adhere the insulation to the masonry and, where applicable, to the thru-wall flashing. The adhesive shall not deleteriously affect the insulation, and shall have a record of satisfactory and proven performance for the conditions under which to be used.

2.10 EXPANSION-JOINT MATERIALS

Backer rod and sealant shall be adequate to accommodate joint compression equal to 50 percent of the width of the joint. The backer rod shall be compressible rod stock of polyethylene foam, polyurethane foam, butyl rubber foam, or other flexible, nonabsorptive material as recommended by the sealant manufacturer. Sealant shall conform to Section 07900AJOINT SEALING.

2.11 FLASHING

Flashing shall be as specified in Section 07600 SHEET METALWORK, GENERAL.

PART 3 EXECUTION

3.1 ENVIRONMENTAL REQUIREMENTS

3.1.1 Hot Weather Installation

The following precautions shall be taken if masonry is erected when the ambient air temperature is more than 99 degrees F in the shade and the relative humidity is less than 50 percent. All masonry materials shall be shaded from direct sunlight; mortar beds shall be spread no more than 4 feet ahead of masonry; masonry units shall be set within one minute of spreading mortar; and after erection, masonry shall be protected from direct exposure to wind and sun for 48 hours.

3.1.2 Cold Weather Installation

Before erecting masonry when ambient temperature or mean daily air temperature falls below 40 degrees F, a written statement of proposed cold weather construction procedures shall be submitted for approval. The following precautions shall be taken during all cold weather erection.

3.1.2.1 Preparation

Ice or snow formed on the masonry bed shall be thawed by the application of heat. Heat shall be applied carefully until the top surface of the masonry is dry to the touch. Sections of masonry deemed frozen and damaged shall be removed before continuing construction of those sections.

a. Air Temperature 40 to 32 Degrees F. Sand or mixing water shall be heated to produce mortar temperatures between 40 and 120 degrees F.

b. Air Temperature 32 to 25 Degrees F. Sand and mixing water shall be heated to produce mortar temperatures between 40 and 120 degrees F. Temperature of mortar on boards shall be maintained above freezing.

c. Air Temperature 25 to 20 Degrees F. Sand and mixing water shall be heated to provide mortar temperatures between 40 and 120 degrees F. Temperature of mortar on boards shall be maintained above freezing. Sources of heat shall be used on both sides of walls under construction. Windbreaks shall be employed when wind is in excess of 15 mph.

d. Air Temperature 20 Degrees F and below. Sand and mixing water shall be heated to provide mortar temperatures between 40 and 120 degrees F. Enclosure and auxiliary heat shall be provided to maintain air temperature above 32 degrees F. Temperature of units when laid shall not be less than 20 degrees F.

3.1.2.2 Completed Masonry and Masonry Not Being Worked On

a. Mean daily air temperature 40 to 32 degrees F. Masonry shall be protected from rain or snow for 24 hours by covering with weather-resistive membrane.

b. Mean daily air temperature 32 to 25 degrees F. Masonry shall be completely covered with weather-resistant membrane for 24 hours.

c. Mean Daily Air Temperature 25 to 20 degrees F. Masonry shall be completely covered with insulating blankets or equally protected for 24 hours.

d. Mean Daily Temperature 20 degrees F and Below. Masonry temperature shall be maintained above 32 degrees F for 24 hours by enclosure and supplementary heat, by electric heating blankets, infrared heat lamps, or other approved methods.

3.2 LAYING MASONRY UNITS

Masonry units shall be laid in running bond pattern. Each unit shall be adjusted to its final position while mortar is still soft and plastic. Units that have been disturbed after the mortar has stiffened shall be

removed, cleaned, and relaid with fresh mortar. Air spaces, cavities, chases, and spaces to be grouted shall be kept free from mortar and other debris. Units used in exposed masonry surfaces shall be selected from those having the least amount of chipped edges or other imperfections detracting from the appearance of the finished work. Vertical joints shall be kept plumb. Units being laid and surfaces to receive units shall be free of water film and frost. Solid units shall be laid in a nonfurrowed full bed of mortar. Units shall be shoved into place so that the vertical joints are tight. Vertical face shells of concrete masonry units, except where indicated at control, shall be completely filled with mortar. Mortar will be permitted to protrude up to 1/2 inch into the space or cells to be grouted. Means shall be provided to prevent mortar from dropping into the space below.

3.2.1 Surface Preparation

Surfaces upon which masonry is placed shall be cleaned of laitance, dust, dirt, oil, organic matter, or other foreign materials and shall be slightly roughened to provide a surface texture with a depth of at least 1/8 inch. Sandblasting shall be used, if necessary, to remove laitance from pores and to expose the aggregate.

3.2.2 Forms and Shores

Forms and shores shall be sufficiently rigid to prevent deflections which may result in cracking or other damage to supported masonry and sufficiently tight to prevent leakage of mortar and grout. Supporting forms and shores shall not be removed in less than 10 days.

3.2.3 Concrete Masonry Units

Units in piers, pilasters, columns, starting courses on footings, solid foundation walls, lintels, and beams, and where cells are to be filled with grout shall be full bedded in mortar under both face shells and webs. Other units shall be full bedded under both face shells. Head joints shall be filled solidly with mortar for a distance in from the face of the unit not less than the thickness of the face shell. Foundation walls below grade shall be grouted solid. Jamb units shall be of the shapes and sizes to conform with wall units. Solid units may be incorporated in the masonry work where necessary to fill out at corners, gable slopes, and elsewhere as approved.

3.2.4 Tolerances

Masonry shall be laid plumb, true to line, with courses level. Bond pattern shall be kept plumb throughout. Corners shall be square unless noted otherwise. Except for walls constructed of prefaced concrete masonry units, masonry shall be laid within the following tolerances (plus or minus unless otherwise noted):

TABLE II

TOLERANCES

| Variation from the plumb in the lines and surfaces of columns, walls and arises | |
|---|---|
| In adjacent masonry units | 1/8 inch |

TOLERANCES

| | |
|---|---|
| In 10 feet | 1/4 inch |
| In 20 feet | 3/8 inch |
| In 40 feet or more | 1/2 inch |

Variations from the plumb for external corners, expansion joints, and other conspicuous lines

| | |
|---|---|
| In 20 feet | 1/4 inch |
| In 40 feet or more | 1/2 inch |

Variations from the level for exposed lintels, sills, parapets, horizontal grooves, and other conspicuous lines

| | |
|---|---|
| In 20 feet | 1/4 inch |
| In 40 feet or more | 1/2 inch |

Variation from level for bed joints and top surfaces of bearing walls

| | |
|---|---|
| In 10 feet | 1/4 inch |
| In 40 feet or more | 1/2 inch |

Variations from horizontal lines

| | |
|---|---|
| In 10 feet | 1/4 inch |
| In 20 feet | 3/8 inch |
| In 40 feet or more | 1/2 inch |

Variations in cross sectional dimensions of columns and in thickness of walls

| | |
|---|---|
| Minus | 1/4 inch |
| Plus | 1/2 inch |

3.2.5 Cutting and Fitting

Full units of the proper size shall be used wherever possible, in lieu of cut units. Cutting and fitting, including that required to accommodate the work of others, shall be done by masonry mechanics using power masonry saws. Concrete masonry units may be wet or dry cut. Wet cut units, before being placed in the work, shall be dried to the same surface-dry appearance as uncut units being laid in the wall. Cut edges shall be clean, true and sharp. Openings in the masonry shall be made carefully so that wall plates, cover plates or escutcheons required by the installation will completely conceal the openings and will have bottoms parallel with the masonry bed joints. Reinforced masonry lintels shall be provided above openings over 12 inches wide for pipes, ducts, cable trays, and other wall penetrations, unless steel sleeves are used.

3.2.6 Jointing

Joints shall be tooled when the mortar is thumbprint hard. Horizontal joints shall be tooled last. Joints shall be brushed to remove all loose and excess mortar. Mortar joints shall be finished as follows:

3.2.6.1 Flush Joints

Joints in concealed masonry surfaces and joints at electrical outlet boxes in wet areas shall be flush cut. Flush cut joints shall be made by cutting off the mortar flush with the face of the wall. Joints in unparged masonry walls below grade shall be pointed tight.

3.2.6.2 Tooled Joints

Joints in exposed exterior and interior masonry surfaces shall be tooled slightly concave . Joints shall be tooled with a jointer slightly larger than the joint width so that complete contact is made along the edges of the unit. Tooling shall be performed so that the mortar is compressed and the joint surface is sealed. Jointer of sufficient length shall be used to obtain a straight and true mortar joint.

3.2.6.3 Door and Window Frame Joints

On the exposed interior side of exterior frames, joints between frames and abutting masonry walls shall be raked to a depth of 3/8 inch. On the exterior side of exterior frames, joints between frames and abutting masonry walls shall be raked to a depth of 3/8 inch.

3.2.7 Joint Widths

Joint widths shall be as follows:

3.2.7.1 Concrete Masonry Units

Concrete masonry units shall have 3/8 inch joints.

3.2.8 Embedded Items

Spaces around built-in items shall be filled with mortar. Openings around flush-mount electrical outlet boxes in wet locations shall be pointed with mortar. Wall plugs, accessories, flashing, pipe sleeves and other items required to be built-in shall be embedded as the masonry work progresses. J oint reinforcement shall be fully embedded in the mortar. Cells receiving anchor bolts and cells of the first course below bearing plates shall be filled with grout.

3.2.9 Unfinished Work

Unfinished work shall be stepped back for joining with new work. Toothing may be resorted to only when specifically approved. Loose mortar shall be removed and the exposed joints shall be thoroughly cleaned before laying new work.

3.2.10 Masonry Wall Intersections

Each course shall be masonry bonded at corners and elsewhere as shown. Masonry walls shall be anchored or tied together at corners and intersections with bond beam reinforcement and prefabricated corner or tee

pieces of joint reinforcement as shown.

## 3.3 MORTAR

Mortar shall be mixed in a mechanically operated mortar mixer for at least 3 minutes, but not more than 5 minutes. Measurement of ingredients for mortar shall be by volume. Ingredients not in containers, such as sand, shall be accurately measured by the use of measuring boxes. Water shall be mixed with the dry ingredients in sufficient amount to provide a workable mixture which will adhere to the vertical surfaces of masonry units. Mortar that has stiffened because of loss of water through evaporation shall be retempered by adding water to restore the proper consistency and workability. Mortar that has reached its initial set or that has not been used within 2-1/2 hours after mixing shall be discarded.

## 3.4 REINFORCING STEEL

Reinforcement shall be cleaned of loose, flaky rust, scale, grease, mortar, grout, or other coating which might destroy or reduce its bond prior to placing grout. Bars with kinks or bends not shown on the drawings shall not be used. Reinforcement shall be placed prior to grouting. Unless otherwise indicated, vertical wall reinforcement shall extend to within 2 inches of tops of walls.

### 3.4.1 Positioning Bars

Vertical bars shall be accurately placed within the cells at the positions indicated on the drawings. A minimum clearance of 1/2 inch shall be maintained between the bars and masonry units. Minimum clearance between parallel bars shall be one diameter of the reinforcement. Vertical reinforcing may be held in place using bar positioners located near the ends of each bar and at intermediate intervals of not more than 192 diameters of the reinforcement. Column and pilaster ties shall be wired in position around the vertical steel. Ties shall be in contact with the vertical reinforcement and shall not be placed in horizontal bed joints.

### 3.4.2 Splices

Bars shall be lapped a minimum of 48 diameters of the reinforcement. Welded or mechanical connections shall develop at least 125 percent of the specified yield strength of the reinforcement.

## 3.5 JOINT REINFORCEMENT INSTALLATION

Joint reinforcement shall be installed at 16 inches on center or as indicated. Reinforcement shall be lapped not less than 6 inches. Prefabricated sections shall be installed at corners and wall intersections. The longitudinal wires of joint reinforcement shall be placed to provide not less than 5/8 inch cover to either face of the unit.

## 3.6 PLACING GROUT

Cells containing reinforcing bars shall be filled with grout. Hollow masonry units in walls or partitions supporting plumbing, heating, or other mechanical fixtures, voids at door and window jambs, and other indicated spaces shall be filled solid with grout. Cells under lintel bearings on each side of openings shall be filled solid with grout for full height of openings. Walls below grade, lintels, and bond beams shall be filled solid with grout. Units other than open end units may require grouting each

course to preclude voids in the units. Grout not in place within 1-1/2 hours after water is first added to the batch shall be discarded. Sufficient time shall be allowed between grout lifts to preclude displacement or cracking of face shells of masonry units. If blowouts, flowouts, misalignment, or cracking of face shells should occur during construction, the wall shall be torn down and rebuilt.

3.6.1 Vertical Grout Barriers for Fully Grouted Walls

Grout barriers shall be provided not more than 30 feet apart, or as required, to limit the horizontal flow of grout for each pour.

3.6.2 Horizontal Grout Barriers

Grout barriers shall be embedded in mortar below cells of hollow units receiving grout.

3.6.3 Cleanouts

3.6.3.1 Cleanouts for Hollow Unit Masonry Construction

Cleanout holes shall be provided at the bottom of every pour in cores containing vertical reinforcement when the height of the grout pour exceeds 5 feet. Where all cells are to be grouted, cleanout courses shall be constructed using bond beam units in an inverted position to permit cleaning of all cells. Cleanout holes shall be provided at a maximum spacing of 32 inches where all cells are to be filled with grout. A new series of cleanouts shall be established if grouting operations are stopped for more than 4 hours. Cleanouts shall not be less than 3 by 4 inch openings cut from one face shell. Manufacturer's standard cutout units may be used at the Contractor's option. Cleanout holes shall not be closed until masonry work, reinforcement, and final cleaning of the grout spaces have been completed and inspected. For walls which will be exposed to view, cleanout holes shall be closed in an approved manner to match surrounding masonry.

3.6.4 Grouting Equipment

3.6.4.1 Grout Pumps

Pumping through aluminum tubes will not be permitted. Pumps shall be operated to produce a continuous stream of grout without air pockets, segregation, or contamination. Upon completion of each day's pumping, waste materials and debris shall be removed from the equipment, and disposed of outside the masonry.

3.6.4.2 Vibrators

Internal vibrators shall maintain a speed of not less than 5,000 impulses per minute when submerged in the grout. At least one spare vibrator shall be maintained at the site at all times. Vibrators shall be applied at uniformly spaced points not further apart than the visible effectiveness of the machine. Duration of vibration shall be limited to time necessary to produce satisfactory consolidation without causing segregation.

3.6.5 Grout Placement

Masonry shall be laid to the top of a pour before placing grout. Grout shall not be placed in two-wythe solid unit masonry cavity until mortar

joints have set for at least 3 days during hot weather and 5 days during cold damp weather. Grout shall not be placed in hollow unit masonry until mortar joints have set for at least 24 hours. Grout shall be placed using a hand bucket, concrete hopper, or grout pump to completely fill the grout spaces without segregation of the aggregates. Vibrators shall not be inserted into lower pours that are in a semi-solidified state. The height of grout pours and type of grout used shall be limited by the dimensions of grout spaces as indicated in Table III. Low-lift grout methods may be used on pours up to and including 5 feet in height. High-lift grout methods shall be used on pours exceeding 5 feet in height.

3.6.5.1 Low-Lift Method

Grout shall be placed at a rate that will not cause displacement of the masonry due to hydrostatic pressure of the grout. Mortar protruding more than 1/2 inch into the grout space shall be removed before beginning the grouting operation. Grout pours 12 inches or less in height shall be consolidated by mechanical vibration or by puddling. Grout pours over 12 inches in height shall be consolidated by mechanical vibration and reconsolidated by mechanical vibration after initial water loss and settlement has occurred. Vibrators shall not be inserted into lower pours that are in a semi-solidified state. Low-lift grout shall be used subject to the limitations of Table III.

3.6.5.2 High-Lift Method

Mortar droppings shall be cleaned from the bottom of the grout space and from reinforcing steel. Mortar protruding more than 1/4 inch into the grout space shall be removed by dislodging the projections with a rod or stick as the work progresses. Reinforcing, bolts, and embedded connections shall be rigidly held in position before grouting is started. CMU units shall not be pre-wetted. Grout, from the mixer to the point of deposit in the grout space shall be placed as rapidly as practical by pumping and placing methods which will prevent segregation of the mix and cause a minimum of grout splatter on reinforcing and masonry surfaces not being immediately encased in the grout lift. The individual lifts of grout shall be limited to 4 feet in height. The first lift of grout shall be placed to a uniform height within the pour section and vibrated thoroughly to fill all voids. This first vibration shall follow immediately behind the pouring of the grout using an approved mechanical vibrator. After a waiting period sufficient to permit the grout to become plastic, but before it has taken any set, the succeeding lift shall be poured and vibrated 12 to 18 inches into the preceding lift. If the placing of the succeeding lift is going to be delayed beyond the period of workability of the preceding, each lift shall be reconsolidated by reworking with a second vibrator as soon as the grout has taken its settlement shrinkage. The waiting, pouring, and reconsolidation steps shall be repeated until the top of the pour is reached. The top lift shall be reconsolidated after the required waiting period. The high-lift grouting of any section of wall between vertical grout barriers shall be completed to the top of a pour in one working day unless a new series of cleanout holes is established and the resulting horizontal construction joint cleaned. High-lift grout shall be used subject to the limitations in Table III.

TABLE III

POUR HEIGHT AND TYPE OF GROUT FOR VARIOUS GROUT SPACE DIMENSIONS

| Maximum Grout Pour Height (feet) (4) | Grout Type | Grouting Procedure | Minimum Dimensions of the Total Clear Areas Within Grout Spaces and Cells (in.) (1,2) Multiwythe Masonry (3) | Hollow-unit Masonry |
|---|---|---|---|---|
| 1 | Fine | Low Lift | 3/4 | 1-1/2 x 2 |
| 5 | Fine | Low Lift | 2 | 2 x 3 |
| 8 | Fine | High Lift | 2 | 2 x 3 |
| 12 | Fine | High Lift | 2-1/2 | 2-1/2 x 3 |
| 24 | Fine | High Lift | 3 | 3 x 3 |
| 1 | Coarse | Low Lift | 1-1/2 | 1-1/2 x 3 |
| 5 | Coarse | Low Lift | 2 | 2-1/2 x 3 |
| 8 | Coarse | High Lift | 2 | 3 x 3 |
| 12 | Coarse | High Lift | 2-1/2 | 3 x 3 |
| 24 | Coarse | High Lift | 3 | 3 x 4 |

Notes:

(1) The actual grout space or cell dimension must be larger than the sum of the following items:
a) The required minimum dimensions of total clear areas given in the table above;
b) The width of any mortar projections within the space;
c) The horizontal projections of the diameters of the horizontal reinforcing bars within a cross section of the grout space or cell.

(2) The minimum dimensions of the total clear areas shall be made up of one or more open areas, with at least one area being 3/4 inch or greater in width.

(3) For grouting spaces between masonry wythes.

(4) Where only cells of hollow masonry units containing reinforcement are grouted, the maximum height of the pour shall not exceed the distance between horizontal bond beams.

## 3.7 BOND BEAMS

Bond beams shall be filled with grout and reinforced as indicated on the drawings. Grout barriers shall be installed under bond beam units to retain the grout as required. Reinforcement shall be continuous, including around corners, except through control joints, unless otherwise indicated on the drawings. Where splices are required for continuity, reinforcement shall be lapped 48 bar diameters. A minimum clearance of 1/2 inch shall be maintained between reinforcement and interior faces of units.

## 3.8 CONTROL JOINTS

Control joints shall be provided as indicated and shall be constructed by using mortar to fill the head joint in accordance with the details shown on the drawings. The vertical mortar joint at control joint locations shall be continuous, including through all bond beams. This shall be

accomplished by utilizing half blocks in alternating courses on each side of the joint. Exposed interior control joints shall be raked to a depth of 1/4 inch. Concealed control joints shall be flush cut.

## 3.9 LINTELS

### 3.9.1 Masonry Lintels

Masonry lintels shall be constructed with lintel units filled solid with grout in all courses and reinforced with a minimum of two No. 4 bars in the bottom course unless otherwise indicated on the drawings. Lintel reinforcement shall extend beyond each side of masonry opening 40 bar diameters or 24 inches, whichever is greater. Reinforcing bars shall be supported in place prior to grouting and shall be located 1/2 inch above the bottom inside surface of the lintel unit.

## 3.10 INSULATION

Walls shall be insulated, where shown, by installing board-type insulation on the interior side of the wall. Board type insulation shall be applied directly to the masonry or thru-wall flashing with adhesive. Insulation shall be neatly fitted between obstructions without impaling of insulation. The insulation shall be applied in parallel courses with vertical joints breaking midway over the course below and shall be applied in moderate contact with adjoining units without forcing, and shall be cut to fit neatly against adjoining surfaces.

## 3.11 SPLASH BLOCKS

Splash blocks shall be located as shown.

## 3.12 POINTING AND CLEANING

After mortar joints have attained their initial set, but prior to hardening, mortar and grout daubs or splashings shall be completely removed from masonry-unit surfaces that will be exposed or painted. Before completion of the work, defects in joints of masonry to be exposed or painted shall be raked out as necessary, filled with mortar, and tooled to match existing joints. Immediately after grout work is completed, scum and stains which have percolated through the masonry work shall be removed using a high pressure stream of water and a stiff bristled brush. Masonry surfaces shall not be cleaned, other than removing excess surface mortar, until mortar in joints has hardened. Masonry surfaces shall be left clean, free of mortar daubs, dirt, stain, and discoloration, including scum from cleaning operations, and with tight mortar joints throughout. Metal tools and metal brushes shall not be used for cleaning.

### 3.12.1 Concrete Masonry Unit and Concrete Brick Surfaces

Exposed concrete masonry unit and concrete brick surfaces shall be dry-brushed at the end of each day's work and after any required pointing, using stiff-fiber bristled brushes.

## 3.13 BEARING PLATES

Bearing plates for beams, joists, joist girders and similar structural members shall be set to the proper line and elevation with damp-pack bedding mortar. Bedding mortar and non-shrink grout shall be as specified in Section 03300 CAST-IN-PLACE STRUCTURAL CONCRETE.

## 3.14 PROTECTION

Facing materials shall be protected against staining. Top of walls shall be covered with nonstaining waterproof covering or membrane when work is not in progress. Covering of the top of the unfinished walls shall continue until the wall is waterproofed with a complete roof or parapet system. Covering shall extend a minimum of 2 feet down on each side of the wall and shall be held securely in place. Before starting or resuming, top surface of masonry in place shall be cleaned of loose mortar and foreign material.

## 3.15 TEST REPORTS

### 3.15.1 Field Testing of Mortar

At least three specimens of mortar shall be taken each day. A layer of mortar 1/2 to 5/8 inch thick shall be spread on the masonry units and allowed to stand for one minute. The specimens shall then be prepared and tested for compressive strength in accordance with ASTM C 780.

### 3.15.2 Field Testing of Grout

Field sampling and testing of grout shall be in accordance with the applicable provisions of ASTM C 1019. A minimum of three specimens of grout per day shall be sampled and tested. Each specimen shall have a minimum ultimate compressive strength of 2000 psi at 28 days.

-- End of Section --

SECTION TABLE OF CONTENTS

DIVISION 05 - METALS

SECTION 05106

ROLLING COVER (CUSTOM FABRICATED)

**03/99; Rev. 12/00**

PART 1 GENERAL

1.1 REFERENCES
1.2 SUBMITTALS
1.3 METALWORK AND MACHINE WORK DETAIL DRAWINGS
1.4 Welder Qualifications
1.5 WORKMANSHIP

PART 2 PRODUCTS

2.1 MATERIALS
2.1.1 Bolts and Cap Screws
2.1.2 Nuts
2.1.3 Washers
2.1.4 Tube Steel
2.1.5 Rolling Cover Shell
2.1.5.1 Structural Steel
2.1.5.2 Aluminum
2.2 WHEELS
2.2.1 Axles

PART 3 EXECUTION

3.1 FABRICATION
3.1.1 General
3.1.2 Dimensional Tolerances
3.1.3 Steel
3.1.4 Aluminum
3.1.5 Bolted Connections
3.1.5.1 Bolted Steel Connections
3.1.5.2 Bolted Aluminum Connections
3.2 MACHINE WORK
3.2.1 Finished Surfaces
3.2.2 Unfinished Surfaces
3.3 MISCELLANEOUS PROVISIONS
3.3.1 Metallic Coatings
3.3.2 Cleaning of Stainless Steel
3.4 WELDING
3.4.1 Welding of Structural Steel
3.4.2 Welding of Aluminum
3.4.3 Welding Inspection
3.4.3.1 Visual Examination
3.4.4 Steel Welding Repairs
3.5 ASSEMBLY
3.6 PROTECTION OF FINISHED WORK
3.6.1 Lubrication After Assembly

3.6.2 Aluminum
3.7 SHOP TESTING
3.7.1 Wheel Assembly Testing
3.7.2 Assembly Test
3.8 PREPARATION FOR SHIPPING

-- End of Section Table of Contents --

SECTION 05106

ROLLING COVER (CUSTOM FABRICATED)
**03/99; Rev. 12/00**

PART 1 GENERAL

This specification covers the factory fabrication, assembly, testing, and shipping requirements for custom fabricated rolling covers having steel or aluminum shells as indicated in vault schedule on the vault drawings. Covers are to be field installed by other than the manufacturer on variously sized new and/or existing hydrant fueling system vaults and tanks.

1.1 REFERENCES

The publications listed below form a part of this specification to the extent referenced. The publications are referred to in the text by basic designation only.

ALUMINUM ASSOCIATION (AA)

| | |
|---|---|
| AA SAS-30 | (1986) Specifications for Aluminum Structures |

ASME INTERNATIONAL (ASME)

| | |
|---|---|
| ASME B4.1 | (1967; R 1999) Preferred Limits and Fits for Cylindrical Parts |
| ASME B46.1 | (1995) Surface Texture (Surface Roughness, Waviness, and Lay) |
| ASME BPV IX | (1998) Boiler and Pressure Vessel Code; Section IX, Welding and Brazing Qualifications |

AMERICAN SOCIETY FOR TESTING AND MATERIALS (ASTM)

| | |
|---|---|
| ASTM A 36/A 36M | (2000a) Carbon Structural Steel |
| ASTM A 123/A 123M | (2000) Zinc (Hot-Dip Galvanized) Coatings on Iron and Steel Products |
| ASTM A 276 | (1998b) Stainless Steel Bars and Shapes |
| ASTM A 307 | (2000) Carbon Steel Bolts and Studs, 60,000 PSI Tensile Strength |
| ASTM A 500 | (1999) Cold-Formed Welded and Seamless Carbon Steel Structural Tubing in Rounds and Shapes |
| ASTM A 563 | (2000) Carbon and Alloy Steel Nuts |
| ASTM B 209 | (1996) Aluminum and Aluminum-Alloy Sheet |

and Plate

AMERICAN WELDING SOCIETY (AWS)

| | |
|---|---|
| AWS D1.1 | (2000) Structural Welding Code - Steel |
| AWS D1.2 | (1997) Structural Welding Code - Aluminum |

## 1.2 SUBMITTALS

Government approval is required for submittals with a "G" designation; submittals not having a "G" designation are for information only. When used, a designation following the "G" designation identifies the office that will review the submittal for the Government. The following shall be submitted in accordance with Section 01330 SUBMITTAL PROCEDURES:

SD-01 Preconstruction Submittals

Assembly Test; G-RE.

A letter, at least 10 working days in advance, advising the contracting officer of the Assembly Test.

SD-02 Shop Drawings

Detail Drawings; G-ED.

Detail drawings for metalwork and machine work shall be submitted and approved prior to fabrication. Detail drawings shall include a sketch showing final wheel to axle mouinting (i..e., washers, nuts, spacers).

SD-03 Product Data

Wheels; G-RE.

To include wheel manufacturer's catalogue cuts and dimensional sheets. Data shall contain a description of the item, materials of construction, and dimensions. Submittal shall include data sufficient to indicate compliance with specifications. Items pertaining to specifications shall be marked with a heavy black arrow.

Materials List; G-ED.

Materials list for fabricated items shall be submitted at the time of submittal of detail drawings.

Welding; G-ED

WPS not prequalified.

Welding of Aluminum; G-ED.

Schedules of welding processes for aluminum fabrications shall be submitted and approved prior to commencing fabrication.

Steel Welding Repairs; G-ED.

Welding repair plans for steel shall be submitted and approved prior to making repairs.

SD-07 Certificates

Welder Qualifications

Certified copies of welder qualifications test records showing qualification in accordance with AWS D1.1.

Welding of Aluminum; G-ED.

Certified report for aluminum welding qualification tests shall be submitted and approved prior to commencing welding.

## 1.3 METALWORK AND MACHINE WORK DETAIL DRAWINGS

Detail drawings for metalwork and machine work shall include catalog cuts, templates, fabrication and assembly details, and type, grade, and class of material as appropriate. Elements of fabricated items inadvertently omitted on contract drawings shall be detailed by the fabricator and indicated on the detail drawings. Drawings shall include all dimensional and tolerance data for each size of vault being fabricated.

## 1.4 Welder Qualifications

The Contractor shall certify that the welders, welding operators and tack welders who will perform structural steel welding have been qualified for the particular type of work to be done in accordance with the requirements of AWS D1.1, Section 4, prior to commencing fabrication. The certificate shall list the qualified welders by name and shall specify the code and procedures under which qualified and the date of qualification. Prior qualification will be accepted if welders have performed satisfactory work under the code for which qualified within the preceding three months. The Contractor shall require welders to repeat the qualifying tests when their work indicates a reasonable doubt as to proficiency. Those passing the requalification tests will be recertified. Those not passing will be disqualified until passing. All expenses in connection with qualification and requalification shall be borne by the Contractor.

## 1.5 WORKMANSHIP

Workmanship shall be of the highest grade and in accordance with the best modern practices to conform with the specifications for the item of work being furnished. Welding shall be continuous along the entire area of contact except where tack welding is permitted. Exposed connections of work in place shall not be tack welded. Exposed welds shall be ground smooth. Exposed surfaces of work in place shall have a smooth finish.

# PART 2 PRODUCTS

## 2.1 MATERIALS

### 2.1.1 Bolts and Cap Screws

All bolts shall be steel and shall conform to ASTM A 307, Grade A, Hex.

2.1.2 Nuts

Shall conform to ASTM A 563, Grade A, Hex, and shall be of the same finish as the fasteners they are used with.

2.1.3 Washers

Flat washers shall conform to the requirements of ASTM A 276 (stainless steel).

2.1.4 Tube Steel

Structural tubing shall conform to ASTM A 500, Grade B.

2.1.5 Rolling Cover Shell

Cover shell material shall be as indicated on the drawings and specified as follows:

2.1.5.1 Structural Steel

Carbon grade steel shall conform to ASTM A 36/A 36M.

2.1.5.2 Aluminum

Aluminum sheets and strips shall comply with ASTM B 209, alloy and temper best suited for the purpose.

2.2 WHEELS

Load carrying wheels shall be of the heavy duty industrial type and shall be the product of a company regularly engaged in the production of wheels. The smaller side wheels may be of standard type. The wheels shall have solid rubber tires that are molded onto spoked or solid centers that are either cast, forged, or machined. The rubber shall have a hardness rating of 80-90 Shore A durometer. Tires shall not stretch or work loose from the metal center. The wheels shall have roller bearings and shall be pressure lubricated from a grease fitting when available. The wheels shall work in a temperature range of -40$^{o}$F to +200$^{o}$ F. The entire wheel assembly shall be symmetrical and shall spin concentrically around the bearing. Metal centers shall be finished with either an epoxy paint, a powder coating, or shall be manufacture galvanized. The diameter of the carrier wheels shall be 6" and the diameter of the side wheels shall be 3". The fabricator shall use appropriate washers and spacers to lock the inner bearing bushing to the axle. Wheels shall be similar or equal to the following:

6" Dia. x 2" wide - McMaster-Carr Cat.105, Pg. 935 No. 8368T25

3" Dia. x 1 3/8" wide - McMaster-Carr Cat.105, Pg. 935 No. 2319T1

2.2.1 Axles

The axle assembly shall be stainless steel and shall be eccentrically machined. A slotted adjustment cam plate shall be attached to the axle by welding as indicated on the drawings. Eccentric offset shall be a minimum of 1/4 inch. Diameter, tolerance and finish of the mating axle shaft shall be coordinated with the wheel manufacturer's diameters and tolerances for a close fit. All fits and tolerances shall be indicated on the shop drawings. Material, weld, and nut shall all be a 300 series stainless

steel.

PART 3 EXECUTION

3.1 FABRICATION

3.1.1 General

Material must be straight before being laid off or worked. If straightening is necessary it shall be done by methods that will not impair the metal. Sharp kinks or bends shall be cause for rejection of the material. Material with welds will not be accepted except where welding is definitely specified, indicated or otherwise approved. Bends shall be made by approved dies, press brakes or bending rolls. Where heating is required, precautions shall be taken to avoid overheating or warping the metal and it shall be allowed to cool in a manner that will not impair the original properties of the metal. Proposed flame cutting of material other than structural steel shall be subject to approval and shall be indicated on detail drawings. Shearing shall be accurate and all portions of the work shall be neatly finished. Corners shall be square and true unless otherwise shown on the drawings. Re-entrant cuts shall be filleted to a minimum radius of 3/4 inch unless otherwise approved. Finished members shall be free of twists, bends and open joints. Bolts, nuts and screws shall be tight.

3.1.2 Dimensional Tolerances

Dimensions shall be measured by a calibrated steel tape of approximately the same temperature as the material being measured. The overall dimensions of an assembled structural unit shall be within the tolerances indicated on the drawings or as specified in the particular section of these specifications for the item of work. Where tolerances are not specified in other sections of these specifications or shown, an allowable variation of 1/32 inch is permissible in the overall length of component members with both ends milled and component members without milled ends shall not deviate from the dimensions shown by not more than 1/16 inch for members 30 feet or less in length and by more than 1/8 inch for members over 30 feet in length.

3.1.3 Steel

Structural steel may be cut, when approved, by mechanically guided or hand-guided torches, provided an accurate profile with a surface that is smooth and free from cracks and notches is obtained. Surfaces and edges to be welded shall be prepared in accordance with AWS D1.1, Subsection 3.2. Where structural steel is not to be welded, chipping or grinding will not be required except as necessary to remove slag and sharp edges of mechanically guided or hand-guided cuts not exposed to view. Hand-guided cuts which are to be exposed or visible shall be chipped, ground or machined to sound metal.

3.1.4 Aluminum

Laying out and cutting of aluminum shall be in accordance with the AA SAS-30, Section 6.

3.1.5 Bolted Connections

3.1.5.1 Bolted Steel Connections

Bolts, nuts and washers shall be of the type specified or indicated. Beveled washers shall be used where bearing faces have a slope of more than 1:20 with respect to a plane normal to the bolt axis. Bolt holes shall be accurately located, smooth, perpendicular to the member and cylindrical. Holes for Bolts shall be drilled or subdrilled and reamed in the shop and shall not be more than 1/16 inch larger than the diameter of the bolt unless otherwise approved, or as indicated on the drawings or specified below. Poor matching of holes will be cause for rejection. Drifting occurring during assembly shall not distort the metal or enlarge the holes. Reaming to a larger diameter of the next standard size bolt will be allowed for slight mismatching.

3.1.5.2 Bolted Aluminum Connections

Punching, drilling, reaming and bolting for bolted aluminum connections shall conform to the requirements of AA SAS-30, Section 6.

3.2 MACHINE WORK

Tolerances, allowances and gauges for metal fits between plain, non-threaded, cylindrical parts shall conform to ASME B4.1 for the class of fit shown or required unless otherwise shown on approved detail drawings. Where fits are not shown they shall be suitable as approved. Tolerances for machine-finished surfaces designated by non-decimal dimensions shall be within 1/64 inch, unless otherwise indicated on the drawings. Sufficient machining stock shall be allowed to ensure true surfaces of solid material. Assembled parts shall be accurately machined and all like parts shall be interchangeable. All drilled holes shall be accurately located.

3.2.1 Finished Surfaces

Surface finishes indicated or specified herein shall be in accordance with ASME B46.1. Values of required roughness heights are arithmetical average deviations expressed in microinches. These values are maximum. Lesser degrees will be satisfactory unless otherwise indicated. Compliance with surface requirements shall be determined by sense of feel and visual inspection of the work compared to Roughness Comparison Specimens in accordance with the provisions of ASME B46.1. Values of roughness width and waviness height shall be consistent with the general type of finish specified by roughness height. Where the finish is not indicated or specified it shall be that which is most suitable for the particular surface, provide the class of fit required and be indicated on the detail drawings by a symbol which conforms to ASME B46.1 when machine finishing is provided. Flaws such as scratches, ridges, holes, peaks, cracks or checks which will make the part unsuitable for the intended use will be cause for rejection.

3.2.2 Unfinished Surfaces

All work shall be laid out to secure proper matching of adjoining unfinished surfaces unless otherwise directed. Where there is a large discrepancy between adjoining unfinished surfaces they shall be chipped and ground smooth or machined to secure proper alignment. Unfinished surfaces shall be true to the lines and dimensions shown and shall be chipped or ground free of all projections and rough spots. Depressions or holes not

affecting the strength or usefulness of the parts shall be filled in an approved manner.

## 3.3 MISCELLANEOUS PROVISIONS

### 3.3.1 Metallic Coatings

Zinc Coatings. Zinc coatings shall be applied in a manner and of a thickness and quality conforming to ASTM A 123/A 123M. Where zinc coatings are destroyed by cutting, welding or other causes the affected areas shall be regalvanized. Coatings 2 ounces or heavier shall be regalvanized with a suitable low-melting zinc base alloy similar to the recommendations of the American Hot-Dip Galvanizers Association to the thickness and quality specified for the original zinc coating.

### 3.3.2 Cleaning of Stainless Steel

Oil, paint and other foreign substances shall be removed from stainless steel surfaces after fabrication. Cleaning shall be done by vapor degreasing or by the use of cleaners of the alkaline, emulsion or solvent type.

## 3.4 WELDING

### 3.4.1 Welding of Structural Steel

Welding shall be in accordance with AWS D1.1. Welding procedures which are considered prequalified as specified in AWS D1.1 will be accepted without further qualification. The Contractor shall submit for approval a listing or an annotated drawing to indicate the joints not prequalified. Procedure qualification shall be rquired for these joints.

### 3.4.2 Welding of Aluminum

Welding of aluminum shall conform to AA SAS-30 or AWS D1.2, Sections 1 through 7, 9 and 10. The welding process and welding operators shall be prequalified as required by AWS D1.2, Section 5 or AA SAS-30, Subsection 7.2.4 in accordance with the methods described in ASME BPV IX, Section IX. A certified report giving the results of the qualifying tests shall be furnished for approval. A complete schedule of the welding process for each aluminum fabrication to be welded shall be furnished for approval.

### 3.4.3 Welding Inspection

The Contractor shall maintain an approved inspection system and perform required inspections in accordance with Contract Clause CONTRACTOR INSPECTION SYSTEM. Welding shall be subject to inspection to determine conformance with the requirements of AWS D1.1, the approved welding procedures and provisions stated in other sections of these specifications.

#### 3.4.3.1 Visual Examination

All completed welds shall be cleaned and carefully examined for insufficient throat or leg sizes, cracks, undercutting, overlap, excessive convexity or reinforcement and other surface defects to ensure compliance with the requirements of AWS D1.1, Section 3 and Section 9, Part D.

3.4.4 Steel Welding Repairs

Defective welds shall be repaired in accordance with AWS D1.1, Section 5. Defective weld metal shall be removed to sound metal by use of air carbon-arc or oxygen gouging. The surfaces shall be thoroughly cleaned before welding. Welds that have been repaired shall be retested by the same methods used in the original inspection. Costs for repairs and retesting shall be borne by the Contractor. Repair procedure shall be submitted for approval prior to doing repair.

3.5 ASSEMBLY

All parts to be assembled shall be thoroughly cleaned. Packing compounds, rust, dirt, grit and other foreign matter shall be removed. Holes and grooves for lubrication shall be cleaned. Enclosed chambers or passages shall be examined to make sure that they are free from damaging materials. Where units or items are shipped as assemblies they will be inspected prior to installation. Pipe wrenches, cold chisels or other tools likely to cause damage to the surfaces of rods, nuts or other parts shall not be used for assembling and tightening parts. Bolts and screws shall be tightened firmly and uniformly but care shall be taken not to overstress the threads. When a half nut is used for locking a full nut the half nut shall be placed first and followed by the full nut. Threads of all bolts, nuts and screws shall be lubricated with a lubricant before assembly. Threads of corrosion-resisting steel bolts and nuts shall be coated with an approved antigalling compound. Driving and drifting bolts or keys will not be permitted.

3.6 PROTECTION OF FINISHED WORK

3.6.1 Lubrication After Assembly

After assembly all wheels shall be pressure lubricated or oiled.

3.6.2 Aluminum

Aluminum in contact with structural steel in the area of the cover shell fastener angle clips shall be protected against galvanic or corrosive action by being given a coat of zinc-chromate primer and a coat of aluminum paint.

3.7 SHOP TESTING

3.7.1 Wheel Assembly Testing

The first wheel assembly shall be tested for correct fit and operation in the presence of the Contracting Officer unless otherwise waived in writing. The wheel shall rotate concentricly and smoothly on the bearings. The cam adjuster shall provide at least 1/8 inch of adjustment in each vertical direction. Waiving of tests will not relieve the Contractor of responsibility for any fault in operation, workmanship or material that occurs before the completion of the contract or guarantee.

3.7.2 Assembly Test

Each rolling cover including the shell, carrier, frame, and temporary brackets shall be assembled in the shop to determine the correctness of the fabrication and matching of the component parts. Tolerances shall not exceed those shown on the drawings. Each cover assembly shall be closely

checked to ensure that all necessary clearances have been provided and that binding does not occur in any moving part. Assembly in the shop shall be done on a straight and level floor or platform, the frame shall be mounted on temporary supports in a level position. The carrier shall move smoothly and with minimal effort. Misalignment or poor operation, or defects disclosed shall be immediately remedied by the Contractor without cost to the Government. Assembly, testing, and disassembly work shall be performed in the presence of the Contracting Officer unless waived in writing. Ten working days notice of the first rolling cover assembly shall be given the Contracting Officer.

## 3.8 PREPARATION FOR SHIPPING

Before disassembly for shipment each rolling cover subassembly shall be match-mark stamped (or as otherwise approved) to facilitate correct reassembly in the field. The location of stampings shall be indicated by circling with a ring of white chalk after the shop finish has been applied or as otherwise directed. Each subassembly shall be wood crated, slatted, skid mounted, or otherwise packaged such that abrasion does not occur during shipment.

-- End of Section --

SECTION TABLE OF CONTENTS

DIVISION 05 - METALS

SECTION 05120

STRUCTURAL STEEL

**07/02**

PART 1 GENERAL

1.1 REFERENCES
1.2 SYSTEM DESCRIPTION
1.3 MODIFICATIONS TO REFERENCES
1.4 SUBMITTALS
1.5 AISC QUALITY CERTIFICATION
1.6 SEISMIC PROVISIONS
1.7 QUALITY ASSURANCE
1.7.1 Drawing Requirements
1.7.2 Certifications
1.7.2.1 Erection Plan
1.7.2.2 Welding Procedures and Qualifications

PART 2 PRODUCTS

2.1 STEEL
2.1.1 Structural Steel
2.1.2 Structural Steel Tubing
2.2 BOLTS, NUTS, AND WASHERS
2.2.1 Structural Steel
2.2.1.1 Bolts
2.2.1.2 Nuts
2.2.1.3 Washers
2.2.2 High-Strength Structural Steel
2.2.2.1 Bolts
2.2.2.2 Nuts
2.2.2.3 Washers
2.2.3 Foundation Anchorage
2.2.3.1 Bolts
2.2.3.2 Nuts
2.2.3.3 Washers
2.3 STRUCTURAL STEEL ACCESSORIES
2.3.1 Welding Electrodes and Rods
2.3.2 Nonshrink Grout
2.3.3 Welded Shear Stud Connectors
2.4 SHOP PRIMER
2.5 FABRICATION
2.5.1 Markings
2.5.2 Shop Primer
2.5.2.1 Cleaning
2.5.2.2 Primer

PART 3 EXECUTION

3.1 FABRICATION

3.2 ERECTION
3.2.1 STORAGE
3.3 CONNECTIONS
3.3.1 Common Grade Bolts
3.4 WELDING
3.5 SHOP PRIMER REPAIR
3.5.1 Field Priming
3.6 FIELD QUALITY CONTROL
3.6.1 Welds
3.6.1.1 Visual Inspection

-- End of Section Table of Contents --

SECTION 05120

STRUCTURAL STEEL
**07/02**

PART 1 GENERAL

1.1 REFERENCES

The publications listed below form a part of this specification to the extent referenced. The publications are referred to in the text by the basic designation only.

AMERICAN INSTITUTE OF STEEL CONSTRUCTION (AISC)

| | |
|---|---|
| AISC M018L | (1994) LRFD Manual of Steel Construction Volume I |
| AISC M019L | (1994) LRFD Manual of Steel Construction Volume II |
| AISC 810 | (1989) Erection Bracing of Low-Rise Structural Steel Frames |
| AISC 316 | (1989) ASD Manual of Steel Construction |
| AISC 317 | (1992; Errata 1994) Connections |
| AISC 325 | (2001) LRFD Manual of Steel Construction |
| AISC 326 | (1983) Detailing for Steel Construction |
| AISC 303 | (2000) Code of Standard Practice for Steel Buildings and Bridges |
| AISC S340 | (1992) Metric Properties of Structural Shapes with Dimensions According to ASTM A6M |
| AISC 341 | (1997) Seismic Provisions for Structural Steel Buildings |
| AISC 348 | (2000) Structural Joints Using ASTM A325 or A490 Bolts |
| AISC 350 | (1999) Load and Resistance Factor Design (LRFD)Specification for Structural Steel Buildings |

AMERICAN SOCIETY FOR TESTING AND MATERIALS (ASTM)

| | |
|---|---|
| ASTM A 36/A 36M | (2001) Carbon Structural Steel |
| ASTM A 307 | (2000) Carbon Steel Bolts and Studs, 60,000 PSI Tensile Strength |

| | |
|---|---|
| ASTM A 325 | (2002) Structural Bolts, Steel, Heat Treated, 120/105 ksi Minimum Tensile Strength |
| ASTM A 490 | (2002) Structural Bolts, Alloy Steel, Heat-Treated, 150 ksi Minimum Tensile Strength |
| ASTM A 500 | (2001a) Cold-Formed Welded and Seamless Carbon Steel Structural Tubing in Rounds and Shapes |
| ASTM A 563 | (1997) Carbon and Alloy Steel Nuts |
| ASTM C 827 | (1995; R 1997) Change in Height at Early Ages of Cylindrical Specimens from Cementitious Mixtures |
| ASTM C 1107 | (1999) Packaged Dry, Hydraulic-Cement Grout (Nonshrink) |
| ASTM F 436 | (1993) Hardened Steel Washers |
| ASTM F 844 | (1998) Washers, Steel, Plain (Flat), Unhardened for General Use |

AMERICAN WELDING SOCIETY (AWS)

| | |
|---|---|
| AWS D1.1/D1.1M | (2002) Structural Welding Code - Steel |

STEEL STRUCTURES PAINTING COUNCIL (SSPC)

| | |
|---|---|
| SSPC SP 3 | (1995) Power Tool Cleaning |
| SSPC SP 6 | (1994) Commercial Blast Cleaning |
| SSPC Paint 25 | (1991) Red Iron Oxide, Zinc Oxide, Raw Linseed Oil and Alkyd Primer (Without Lead and Chromate Pigments) |
| SSPC PA 1 | (2000) Shop, Field, and Maintenance Painting |
| SSPC PS 13.01 | (1991) Epoxy-Polyamide Painting System |

## 1.2 SYSTEM DESCRIPTION

Provide the structural steel system, including shop primer , complete and ready for use. Structural steel systems including design, materials, installation, workmanship, fabrication, assembly, erection, inspection, quality control, and testing shall be provided in accordance with AISC 325 except as modified in this contract.

## 1.3 MODIFICATIONS TO REFERENCES

AISC 325, AISC 350, AISC 303, AISC 348, and AISC S340, except as modified in this section, shall be considered a part of AISC M018L and AISC M019L

and is referred to in this section as AISC 325.

## 1.4 SUBMITTALS

Government approval is required for submittals with a "G" designation; submittals not having a "G" designation are for information only or as otherwise designated. When used, a designation following the "G" designation identifies the office that will review the submittal for the Government. The following shall be submitted in accordance with Section 01330 SUBMITTAL PROCEDURES:

SD-02 Shop Drawings

Erection Plan, including description of temporary supports; G-AE

Fabrication drawings, including description of connections; G-AE

SD-03 Product Data

Shop primer

SD-07 Certificates

Steel

Bolts, nuts, and washers

Welding electrodes and rods

AISC Quality Certification

Welding procedures and qualifications

## 1.5 AISC QUALITY CERTIFICATION

Work shall be fabricated in an AISC certified Category Sbd fabrication plant.

## 1.6 SEISMIC PROVISIONS

In addition to AISC 325, the structural steel system shall be provided in accordance with AISC 341.

## 1.7 QUALITY ASSURANCE

### 1.7.1 Drawing Requirements

Submit fabrication drawings for approval prior to fabrication. Prepare in accordance with AISC 326, AISC 316 and AISC 317. Drawings shall not be reproductions of contract drawings. Include complete information for the fabrication and erection of the structure's components, including the location, type, and size of bolts, welds, member sizes and lengths, connection details, blocks, copes, and cuts. Use AWS standard welding symbols. Shoring and temporary bracing shall be designed and sealed by a registered professional engineer and submitted for record purposes, with

calculations, as part of the drawings.

1.7.2 Certifications

1.7.2.1 Erection Plan

Submit for record purposes. Indicate the sequence of erection, temporary shoring and bracing, and a detailed sequence of welding, including each welding procedure required.

1.7.2.2 Welding Procedures and Qualifications

Prior to welding, submit certification for each welder stating the type of welding and positions qualified for, the code and procedure qualified under, date qualified, and the firm and individual certifying the qualification tests. If the qualification date of the welding operator is more than one-year old, the welding operator's qualification certificate shall be accompanied by a current certificate by the welder attesting to the fact that he has been engaged in welding since the date of certification, with no break in welding service greater than 6 months.

PART 2 PRODUCTS

2.1 STEEL

2.1.1 Structural Steel

ASTM A 36/A 36M.

2.1.2 Structural Steel Tubing

ASTM A 500, Grade B ; .

2.2 BOLTS, NUTS, AND WASHERS

Provide the following unless indicated otherwise.

2.2.1 Structural Steel

2.2.1.1 Bolts

ASTM A 307, Grade A .

2.2.1.2 Nuts

ASTM A 563, Grade and Style for applicable ASTM bolt standard recommended.

2.2.1.3 Washers

ASTM F 844 washers for ASTM A 307 bolts.

2.2.2 High-Strength Structural Steel

2.2.2.1 Bolts

ASTM A 325, Type 1 ASTM A 490, Type 1 or 2.

2.2.2.2 Nuts

ASTM A 563, Grade and Style as specified in the applicable ASTM bolt standard.

2.2.2.3 Washers

ASTM F 436, plain carbon steel.

2.2.3 Foundation Anchorage

2.2.3.1 Bolts

ASTM A 307.

2.2.3.2 Nuts

ASTM A 563, Grade A, hex style.

2.2.3.3 Washers

ASTM F 844.

2.3 STRUCTURAL STEEL ACCESSORIES

2.3.1 Welding Electrodes and Rods

AWS D1.1/D1.1M.

2.3.2 Nonshrink Grout

ASTM C 1107, with no ASTM C 827 shrinkage. Grout shall be nonmetallic.

2.3.3 Welded Shear Stud Connectors

AWS D1.1/D1.1M.

2.4 SHOP PRIMER

SSPC Paint 25, (alkyd primer) or SSPC PS 13.01 epoxy-polyamide, green primer (Form 150) type 1, except provide a Class B coating in accordance with AISC 316 and AISC 317 for slip critical joints. Primer shall conform to Federal, State, and local VOC regulations. If flash rusting occurs, re-clean the surface prior to application of primer.

2.5 FABRICATION

2.5.1 Markings

Prior to erection, members shall be identified by a painted erection mark. Connecting parts assembled in the shop for reaming holes in field connections shall be match marked with scratch and notch marks. Do not locate erection markings on areas to be welded . Do not locate match markings in areas that will decrease member strength or cause stress concentrations.

2.5.2 Shop Primer

Shop prime structural steel, except as modified herein, in accordance with

SSPC PA 1. Do not prime steel surfaces embedded in concrete, surfaces designed as part of a composite steel concrete section, or surfaces within 0.5 inch of the toe of the welds prior to welding except surfaces on which metal decking is to be welded. Prior to assembly, prime surfaces which will be concealed or inaccessible after assembly. Do not apply primer in foggy or rainy weather; when the ambient temperature is below 45 degrees F or over 95 degrees F; or when the primer may be exposed to temperatures below 40 degrees F within 48 hours after application, unless approved otherwise by the Contracting Officer.

2.5.2.1 Cleaning

SSPC SP 6, except steel exposed in spaces above ceilings, attic spaces, furred spaces, and chases that will be hidden to view in finished construction may be cleaned to SSPC SP 3 when recommended by the shop primer manufacturer. Maintain steel surfaces free from rust, dirt, oil, grease, and other contaminants through final assembly.

2.5.2.2 Primer

Apply primer to a minimum dry film thickness of 2.0 mil except provide the Class B coating for slip critical joints in accordance with the coating manufacturer's recommendations. Repair damaged primed surfaces with an additional coat of primer.

PART 3 EXECUTION

3.1 FABRICATION

Fabrication shall be in accordance with the applicable provisions of AISC 316. Fabrication and assembly shall be done in the shop to the greatest extent possible. Structural steelwork, except surfaces of steel to be encased in concrete, surfaces to be field welded, surfaces to be fireproofed, and contact surfaces of friction-type high-strength bolted connections shall be prepared for painting in accordance with AISC 303 and primed with the specified paint.

3.2 ERECTION

a: Erection of structural steel, except as indicated in item b. below, shall be in accordance with the applicable provisions of AISC 325 . Erection plan shall be reviewed, stamped and sealed by a licensed structural engineer.

b. For low-rise structural steel buildings (60 feet tall or less and a maximum of 2 stories), the erection plan shall conform to AISC 303 and the structure shall be erected in accordance withAISC 810.

Provide for drainage in structural steel. After final positioning of steel members, provide full bearing under base plates and bearing plates using nonshrink grout. Place nonshrink grout in accordance with the manufacturer's instructions.

3.2.1 STORAGE

Material shall be stored out of contact with the ground in such manner and location as will minimize deterioration.

## 3.3 CONNECTIONS

Except as modified in this section, connections not detailed shall be designed in accordance with AISC 350. Build connections into existing work. Do not tighten anchor bolts set in concrete with impact torque wrenches. Punch, subpunch and ream, or drill bolt and pin holes. Bolts, nuts, and washers shall be clean of dirt and rust, and lubricated immediately prior to installation.

### 3.3.1 Common Grade Bolts

ASTM A 307 bolts shall be tightened to a "snug tight" fit. "Snug tight" is the tightness that exists when plies in a joint are in firm contact. If firm contact of joint plies cannot be obtained with a few impacts of an impact wrench, or the full effort of a man using a spud wrench, contact the Contracting Officer for further instructions.

## 3.4 WELDING

The contractor shall develop and submit the Welding Procedure Specifications (WPS) for all welding, including welding done using prequalified procedures. Prequalified procedures may be submitted for information only; however, procedures that are not prequalified shall be submitted for approval.

## 3.5 SHOP PRIMER REPAIR

Repair shop primer in accordance with the paint manufacturer's recommendation for surfaces damaged by handling, transporting, cutting, welding, or bolting.

### 3.5.1 Field Priming

Field priming of steel exposed to the weather, or located in building areas without HVAC for control of relative humidity. After erection, the field bolt heads and nuts, field welds, and any abrasions in the shop coat shall be cleaned and primed with paint of the same quality as that used for the shop coat.

## 3.6 FIELD QUALITY CONTROL

Perform field tests, and provide labor, equipment, and incidentals required for testing. The Contracting Officer shall be notified in writing of defective welds, bolts, nuts, and washers within 7 working days of the date of weld inspection.

### 3.6.1 Welds

#### 3.6.1.1 Visual Inspection

AWS D1.1/D1.1M. Furnish the services of AWS-certified welding inspectors for fabrication and erection inspection and testing and verification inspections. Welding inspectors shall visually inspect and mark welds, including fillet weld end returns.

-- End of Section --

SECTION TABLE OF CONTENTS

DIVISION 05 - METALS

SECTION 05210A

STEEL JOISTS

**12/02**

PART 1 GENERAL

1.1 REFERENCES
1.2 SUBMITTALS
1.3 GENERAL REQUIREMENTS
1.4 DELIVERY AND STORAGE

PART 2 PRODUCTS

2.1 OPEN WEB STEEL JOISTS
2.2 ACCESSORIES AND FITTINGS
2.3 SHOP PAINTING

PART 3 EXECUTION

3.1 ERECTION
3.2 BEARING PLATES

-- End of Section Table of Contents --

SECTION 05210A

STEEL JOISTS
**12/02**

PART 1 GENERAL

1.1 REFERENCES

The publications listed below form a part of this specification to the extent referenced. The publications are referred to in the text by basic designation only.

STEEL JOIST INSTITUTE (SJI)

| | |
|---|---|
| SJI Specs & Tables | (August 2002) Standard Specifications and Load Tables for Steel Joists and Joist Girders |

1.2 SUBMITTALS

Government approval is required for submittals with a "G" designation; submittals not having a "G" designation are for information only. When used, a designation following the "G" designation identifies the office that will review the submittal for the Government. The following shall be submitted in accordance with Section 01330 SUBMITTAL PROCEDURES:

SD-02 Shop Drawings

Steel Joists; G-AE

Detail drawings shall include fabrication and erection details, specifications for shop painting, and identification markings of joists .

SD-07 Certificates

Steel Joists; G-AE

Certificates stating that the steel joists have been designed and manufactured in accordance with SJI Specs & Tables. Complete engineering design computations may be submitted in lieu of the certification.

1.3 GENERAL REQUIREMENTS

Steel joists are designated on the drawings in accordance with the standard designations of the Steel Joist Institute. Joists of other standard designations or joists with properties other than those shown may be substituted for the joists designated provided the structural properties are equal to or greater than those of the joists shown and provided all other specified requirements are met.

1.4 DELIVERY AND STORAGE

Materials shall be delivered to the site in undamaged condition and stored off the ground in a well drained location, protected from damage, and easily accessible for inspection and handling.

PART 2 PRODUCTS

2.1 OPEN WEB STEEL JOISTS

Open web steel joists shall conform to SJI Specs & Tables, K-Series. Joists shall be designed to support the loads given in the standard load tables of SJI Specs & Tables.

2.2 ACCESSORIES AND FITTINGS

Accessories and fittings, including end supports and bridging, shall be in accordance with the standard specifications under which the members were designed.

2.3 SHOP PAINTING

Joists and accessories shall be shop painted with a rust-inhibiting primer paint. For joists which will be finish painted under Section 09900 PAINTS AND COATINGS, the primer paint shall be limited to a primer which is compatible with the specified finish paint.

PART 3 EXECUTION

3.1 ERECTION

Installation of joists shall be in accordance with the standard specification under which the member was produced. Joists shall be handled in a manner to avoid damage. Damaged joists shall be removed from the site, except when field repair is approved and such repairs are satisfactorily made in accordance with the manufacturer's recommendations. Joists shall be accurately set, and end anchorage shall be in accordance with the standard specification under which the joists were produced. For spans over 40 ft through 60 ft one row of bridging nearest midspan shall be bolted diagonal bridging; for spans over 60 ft bolted diagonal bridging shall be used instead of welded horizontal bridging. Joist bridging and anchoring shall be secured in place prior to the application of any construction loads. Any temporary loads shall be distributed so that the carrying capacity of any joist is not exceeded. Loads shall not be applied to bridging during construction or in the completed work. Abraded, corroded, and field welded areas shall be cleaned and touched up with the same type of paint used in the shop painting.

3.2 BEARING PLATES

Bearing plates shall be provided as indicated on the drawings.

-- End of Section --

SECTION TABLE OF CONTENTS

DIVISION 05 - METALS

SECTION 05300A

STEEL DECKING

**01/02**

PART 1 GENERAL

1.1 REFERENCES
1.2 SUBMITTALS
1.3 DELIVERY, STORAGE, AND HANDLING

PART 2 PRODUCTS

2.1 DECK UNITS
2.1.1 Composite Deck
2.2 TOUCH-UP PAINT
2.3 ADJUSTING PLATES
2.4 CLOSURE PLATES
2.4.1 Closure Plates for Composite Deck
2.4.1.1 Cover Plates to Close Panels
2.4.1.2 Sheet Metal
2.5 ACCESSORIES

PART 3 EXECUTION

3.1 ERECTION
3.2 SHORING
3.3 ATTACHMENTS
3.4 HOLES AND OPENINGS

-- End of Section Table of Contents --

SECTION 05300A

STEEL DECKING
**01/02**

PART 1 GENERAL

1.1 REFERENCES

The publications listed below form a part of this specification to the extent referenced. The publications are referred to in the text by basic designation only.

AMERICAN IRON AND STEEL INSTITUTE (AISI)

| | |
|---|---|
| AISI SG-973 | (1996) Cold-Formed Steel Design Manual |

AMERICAN SOCIETY FOR TESTING AND MATERIALS (ASTM)

| | |
|---|---|
| ASTM A 653/A 653M | (2000) Steel Sheet, Zinc-Coated (Galvanized) or Zinc-Iron Alloy-Coated (Galvannealed) by the Hot-Dip Process |
| ASTM A 780 | (2000) Repair of Damaged and Uncoated Areas of Hot-Dipped Galvanized Coatings |

AMERICAN WELDING SOCIETY (AWS)

| | |
|---|---|
| AWS D1.3 | (1998) Structural Welding Code - Sheet Steel |

STEEL DECK INSTITUTE (SDI)

| | |
|---|---|
| SDI DDM01 | (1991) Diaphragm Design Manual |
| SDI 30 | (1995) Design Manual for Composite Decks, Form Decks, Roof Decks, and Cellular Metal Floor Deck with Electrical Distribution |

THE SOCIETY FOR PROTECTIVE COATINGS (SSPC)

| | |
|---|---|
| SSPC Paint 20 | (1991) Zinc-Rich Primers (Type I - "Inorganic" and Type II - "Organic") |

1.2 SUBMITTALS

Government approval is required for submittals with a "G" designation; submittals not having a "G" designation are for information only. When used, a designation following the "G" designation identifies the office that will review the submittal for the Government. The following shall be submitted in accordance with Section 01330 SUBMITTAL PROCEDURES:

SD-02 Shop Drawings

Deck Units; G-AE
Accessories; G-AE

Attachments; G-AE
Holes and Openings; G-AE

Drawings shall include type, configuration, structural properties, location, and necessary details of deck units, accessories, and supporting members; size and location of holes to be cut and reinforcement to be provided; location and sequence of welded or fastener connections; and the manufacturer's erection instructions.

SD-03 Product Data

Deck Units; G-AE

Design computations for the structural properties of the deck units or SDI certification that the units are designed in accordance with SDI specifications.

Attachments; G-AE

Prior to welding operations, copies of qualified procedures and lists of names and identification symbols of qualified welders and welding operators.

SD-04 Samples

Deck Units; G-AE
Accessories; G-AE

A 2 sq. ft. sample of the decking material to be used, along with a sample of each of the accessories used.

SD-07 Certificates

Deck Units;
Attachments;

Manufacturer's certificates attesting that the decking material meets the specified requirements.

## 1.3 DELIVERY, STORAGE, AND HANDLING

Deck units shall be delivered to the site in a dry and undamaged condition, stored off the ground with one end elevated, and stored under a weathertight covering permitting good air circulation. Finish of deck units shall be maintained at all times by using touch-up paint whenever necessary to prevent the formation of rust.

# PART 2 PRODUCTS

## 2.1 DECK UNITS

Deck units shall conform to SDI 30. Panels of maximum possible lengths shall be used to minimize end laps. Deck units shall be fabricated in lengths to span 3 or more supports with flush, telescoped, or nested 2 inch laps at ends, and interlocking, or nested side laps, unless otherwise indicated. Deck with cross-sectional configuration differing from the units indicated may be used, provided that the properties of the proposed units, determined in accordance with AISI SG-973, are equal to or greater

than the properties of the units indicated and that the material will fit the space provided without requiring revisions to adjacent materials or systems.

2.1.1 Composite Deck

Deck to receive concrete as a filler or for composite deck assembly shall conform to ASTM A 653/A 653M. Deck used as the tension reinforcing in composite deck shall be fabricated of the steel design thickness required by the design drawings, and shall be zinc-coated in conformance with ASTM A 653/A 653M, G60 coating class. Deck units used in composite deck shall have adequate embossment to develop mechanical shear bond to provide composite action between the deck and the concrete.

2.2 TOUCH-UP PAINT

Touch-up paint for shop-painted units shall be of the same type used for the shop painting , and touch-up paint for zinc-coated units shall be an approved galvanizing repair paint with a high-zinc dust content . Welds shall be touched-up with paint conforming to SSPC Paint 20 in accordance with ASTM A 780. Finish of deck units and accessories shall be maintained by using touch-up paint whenever necessary to prevent the formation of rust.

2.3 ADJUSTING PLATES

Adjusting plates or segments of deck units shall be provided in locations too narrow to accommodate full-size units. As far as practical, the plates shall be the same thickness and configuration as the deck units.

2.4 CLOSURE PLATES

2.4.1 Closure Plates for Composite Deck

The concrete shall be supported and retained at each floor level. Provide edge closures at all edges of the slab of sufficient strength and stiffness to support the wet concrete. Metal closures shall be provided for all openings in composite steel deck 1/4 inch and over, including but not limited to:

2.4.1.1 Cover Plates to Close Panels

Cover plates to close panel edge and end conditions and where panels change direction or abut. Butt joints in composite steel deck may receive a tape joint cover.

2.4.1.2 Sheet Metal

Where deck is cut for passage of pipes, ducts, columns, etc., and deck is to remain exposed, provide a neatly cut sheet metal collar to cover edges of deck. Do not cut deck until after installation of supplemental supports.

2.5 ACCESSORIES

The manufacturer's standard accessories shall be furnished as necessary to complete the deck installation. Metal accessories shall be of the same material as the deck and have minimum design thickness as follows: saddles, 0.0474 inch; welding washers, 0.0598 inch; cant strip, 0.0295 inch; other metal accessories, 0.0358 inch; unless otherwise indicated. Accessories shall include but not be limited to saddles, welding washers, cant strips,

butt cover plates, underlapping sleeves, and ridge and valley plates.

## PART 3 EXECUTION

### 3.1 ERECTION

Erection of deck and accessories shall be in accordance with SDI 30, SDI DDM01 and the approved detail drawings. Damaged deck and accessories including material which is permanently stained or contaminated, with burned holes or deformed shall not be installed. The deck units shall be placed on secure supports, properly adjusted, and aligned at right angles to supports before being permanently secured in place. The deck shall not be filled with concrete, used for storage or as a working platform until the units have been secured in position. Loads shall be distributed by appropriate means to prevent damage during construction and to the completed assembly. The maximum uniform distributed storage load shall not exceed the design live load. There shall be no loads suspended directly from the steel deck.

### 3.2 SHORING

Shoring is not required for placing and curing of concrete in the composite floor deck assemblies shown.

### 3.3 ATTACHMENTS

All fasteners shall be installed in accordance with the manufacturer's recommended procedure, except as otherwise specified. The deck units shall be welded with nominal 5/8 inch diameter puddle welds to supports as indicated on the design drawings and in accordance with requirements of SDI 30. All welding of steel deck shall be in accordance with AWS D1.3 using methods and electrodes as recommended by the manufacturer of the steel deck being used. Welds shall be made only by operators previously qualified by tests prescribed in AWS D1.3 to perform the type of work required. Welding washers shall not be used at the connections of the deck to supports. Welding washers shall not be used at sidelaps. Holes and similar defects will not be acceptable. Deck ends shall be lapped 2 inches . All partial or segments of deck units shall be attached to structural supports in accordance with Section 2.5 of SDI DDM01.

### 3.4 HOLES AND OPENINGS

All holes and openings required shall be coordinated with the drawings, specifications, and other trades. Holes and openings shall be drilled or cut, reinforced and framed as indicated on the drawings or described in the specifications and as required for rigidity and load capacity. Holes and openings less than 6 inches across require no reinforcement. Holes and openings 6 to 12 inches across shall be reinforced by 0.0474 inch thick steel sheet at least 12 inches wider and longer than the opening and be fastened to the steel deck at each corner of the sheet and at a maximum of 6 inches on center. Holes and openings larger than 12 inches shall be reinforced by steel angles installed perpendicular to the steel joists and supported by the adjacent steel joists. Steel angles shall be installed perpendicular to the deck ribs and shall be fastened to the angles perpendicular to the steel joists.

-- End of Section --

SECTION TABLE OF CONTENTS

DIVISION 05 - METALS

SECTION 05500A

MISCELLANEOUS METAL

**01/02**

PART 1 GENERAL

1.1 REFERENCES
1.2 SUBMITTALS
1.3 GENERAL REQUIREMENTS
1.4 DISSIMILAR MATERIALS
1.5 WORKMANSHIP
1.6 ANCHORAGE
1.7 ALUMINUM FINISHES
1.8 SHOP PAINTING

PART 2 PRODUCTS

2.1 FLOOR GRATINGS AND FRAMES
2.2 HANDRAILS
2.2.1 Steel Handrails, Including Carbon Steel Inserts
2.3 LADDERS
2.4 MISCELLANEOUS
2.4.1 Carbon Grade Steel
2.4.2 Structural Tubing
2.4.3 High-Strength Bolts
2.5 STEEL STAIRS
2.6 FIRE EXTINGUISHER CABINETS
2.7 FLOOR BRIDGE
2.8 VALVE PIT ACCESS DOOR AND FRAME

PART 3 EXECUTION

3.1 GENERAL INSTALLATION REQUIREMENTS
3.2 INSTALLATION OF VENTS
3.3 INSTALLATION OF PIPE GUARDS
3.4 ATTACHMENT OF HANDRAILS
3.4.1 Installation of Steel Handrails
3.5 INSTALLATION OF FIRE EXTINGUISHER CABINETS
3.6 TOUCH-UP PAINT

-- End of Section Table of Contents --

SECTION 05500A

MISCELLANEOUS METAL
**01/02**

PART 1 GENERAL

1.1 REFERENCES

The publications listed below form a part of this specification to the extent referenced. The publications are referred to in the text by basic designation only.

ALUMINUM ASSOCIATION (AA)

| | |
|---|---|
| AA DAF-45 | (1997) Designation System for Aluminum Finishes |

AMERICAN NATIONAL STANDARDS INSTITUTE (ANSI)

| | |
|---|---|
| ANSI A14.3 | (1992) Ladders - Fixed - Safety Requirements |

ASTM INTERNATIONAL (ASTM)

| | |
|---|---|
| ASTM A 123/A 123M | (2001a) Zinc (Hot-Dip Galvanized) Coatings on Iron and Steel Products |
| ASTM A 325 | (2002) Structural Bolts, Steel, Heat Treated, 120/105 ksi Minimum Tensile Strength |
| ASTM A 36/A 36M | (2001) Carbon Structural Steel |
| ASTM A 500 | (2001a) Cold-Formed Welded and Seamless Carbon Steel Structural Tubing in Rounds and Shapes |
| ASTM A 53/A 53M | (2002) Pipe, Steel, Black and Hot-Dipped, Zinc-Coated, Welded and Seamless |
| ASTM E 814 | (2002) Fire Tests of Through-Penetration Fire Stops |

AMERICAN WELDING SOCIETY (AWS)

| | |
|---|---|
| AWS D1.1/D1.1M | (2002) Structural Welding Code - Steel |

NATIONAL ASSOCIATION OF ARCHITECTURAL METAL MANUFACTURERS (NAAMM)

| | |
|---|---|
| NAAMM MBG 531 | (1994) Metal Bar Grating Manual |

NATIONAL FIRE PROTECTION ASSOCIATION (NFPA)

| | |
|---|---|
| NFPA 10 | (1998; Errata 10-98-1) Portable Fire Extinguishers |

| | |
|---|---|
| NFPA 211 | (2000) Chimneys, Fireplaces, Vents, and Solid Fuel-Burning Appliances |

U.S. GENERAL SERVICES ADMINISTRATION (GSA)

| | |
|---|---|
| CID A-A-344 | (Rev B) Lacquer, Clear Gloss, Exterior, Interior |

## 1.2 SUBMITTALS

Government approval is required for submittals with a "G" designation; submittals not having a "G" designation are for information only. When used, a designation following the "G" designation identifies the office that will review the submittal for the Government. The following shall be submitted in accordance with Section 01330 SUBMITTAL PROCEDURES:

SD-02 Shop Drawings

Miscellaneous Metal Items; G-AE.

Detail drawings indicating material thickness, type, grade, and class; dimensions; and construction details. Drawings shall include catalog cuts, erection details, manufacturer's descriptive data and installation instructions, and templates. Detail drawings for the following items: steel bar grating and supports, handrails, ladders, floor bridge, valve pit access door and frame, miscellaneous shapes, and steel stairs.

SD-04 Samples

Miscellaneous Metal Items.

Samples of the following items. Samples shall be full size, taken from manufacturer's stock, and shall be complete as required for installation in the structure. Samples may be installed in the work, provided each sample is clearly identified and its location recorded.

## 1.3 GENERAL REQUIREMENTS

The Contractor shall verify all measurements and shall take all field measurements necessary before fabrication. Welding to or on structural steel shall be in accordance with AWS D1.1/D1.1M. Items specified to be galvanized, when practicable and not indicated otherwise, shall be hot-dip galvanized after fabrication. Galvanizing shall be in accordance with ASTM A 123/A 123M. Exposed fastenings shall be compatible materials, shall generally match in color and finish, and shall harmonize with the material to which fastenings are applied. Materials and parts necessary to complete each item, even though such work is not definitely shown or specified, shall be included. Poor matching of holes for fasteners shall be cause for rejection. Fastenings shall be concealed where practicable. Thickness of metal and details of assembly and supports shall provide strength and stiffness. Joints exposed to the weather shall be formed to exclude water.

## 1.4 DISSIMILAR MATERIALS

Where dissimilar metals are in contact, or where aluminum is in contact with concrete, mortar, masonry, wet or pressure-treated wood, or absorptive

materials subject to wetting, the surfaces shall be protected with a coat of bituminous paint or asphalt varnish.

1.5 WORKMANSHIP

Miscellaneous metalwork shall be well formed to shape and size, with sharp lines and angles and true curves. Drilling and punching shall produce clean true lines and surfaces. Welding shall be continuous along the entire area of contact except where tack welding is permitted. Exposed connections of work in place shall not be tack welded. Exposed welds shall be ground smooth. Exposed surfaces of work in place shall have a smooth finish, and unless otherwise approved, exposed riveting shall be flush. Where tight fits are required, joints shall be milled. Corner joints shall be coped or mitered, well formed, and in true alignment. Work shall be accurately set to established lines and elevations and securely fastened in place. Installation shall be in accordance with manufacturer's installation instructions and approved drawings, cuts, and details.

1.6 ANCHORAGE

Anchorage shall be provided where necessary for fastening miscellaneous metal items securely in place. Anchorage not otherwise specified or indicated shall include slotted inserts made to engage with the anchors, expansion shields, and power-driven fasteners when approved for concrete; toggle bolts and through bolts for masonry; machine and carriage bolts for steel; and lag bolts and screws for wood.

1.7 ALUMINUM FINISHES

Unless otherwise specified, aluminum items shall have standard mill finish. The thickness of the coating shall be not less than that specified for protective and decorative type finishes for items used in interior locations or architectural Class I type finish for items used in exterior locations in AA DAF-45. Items to be anodized shall receive a polished satin finish. Aluminum surfaces to be in contact with plaster or concrete during construction shall be protected with a field coat conforming to CID A-A-344.

1.8 SHOP PAINTING

Surfaces of ferrous metal except galvanized surfaces, shall be cleaned and shop coated with the manufacturer's standard protective coating unless otherwise specified. Surfaces of items to be embedded in concrete shall not be painted. Items to be finish painted shall be prepared according to manufacturer's recommendations or as specified.

PART 2 PRODUCTS

2.1 FLOOR GRATINGS AND FRAMES

Carbon steel grating shall be fabricated in accordance with NAAMM MBG 531 . Edges shall be banded with bars 1/4 inch less in height than bearing bars for grating sizes above 3/4 inch. Banding at penetrations and cut-outs shall be with full depth bars. Banding at cut-outs and penetrations shall be welded to every bar. Banding bars shall be flush with the top of bearing grating. Grating shall be anchored to supports with removable saddle clips. Support frames and anchorage shall be as indicated. Floor gratings and frames shall be galvanized after fabrication .

## 2.2 HANDRAILS

Handrails shall be designed to resist a concentrated load of 200 pounds in any direction at any point of the top of the rail or 20 pounds per foot applied horizontally to top of the rail, whichever is more severe.

### 2.2.1 Steel Handrails, Including Carbon Steel Inserts

Steel handrails shall be steel pipe conforming to ASTM A 53/A 53M . Steel railings shall be 1-1/2 inch nominal size. Railings shall be hot-dip galvanized . Pipe collars shall be hot-dip galvanized steel.

a. Joint posts, rail, and corners shall be fabricated by one of the following methods:

(1) Mitered and welded joints by fitting post to top rail and intermediate rail to post, mitering corners, groove welding joints, and grinding smooth. Railing splices shall be butted and reinforced by a tight fitting interior sleeve not less than 6 inches long.

(2) Railings may be bent at corners in lieu of jointing, provided bends are made in suitable jigs and the pipe is not crushed.

## 2.3 LADDERS

Ladders shall be galvanized steel, fixed rail type in accordance with ANSI A14.3. Rungs shall be 3/4-inch steel rods, fitted into punched holes in rails, welded and ground smooth. All splices and connections shall have a smooth transition with original members without projections that are sharp or more extension than required for joint strength. Rails shall be fitted with brackets at the spacing indicated for anchorage to the structure.

## 2.4 MISCELLANEOUS

Miscellaneous plates and shapes for items that do not form a part of the structural steel framework, such as lintels, sill angles, miscellaneous mountings, and frames, shall be provided to complete the work.

### 2.4.1 Carbon Grade Steel

Carbon grade steel shall conform to ASTM A 36/A 36M.

### 2.4.2 Structural Tubing

Structural tubing shall conform to ASTM A 500, Grade B.

### 2.4.3 High-Strength Bolts

High-strength bolts shall conform to ASTM A 325, unless otherwise indicated. Nuts and washers for high-strength bolts shall be as specified in ASTM A 325

## 2.5 STEEL STAIRS

Steel stairs shall be complete with structural or formed channel stringers, grating treads, landings, columns, handrails, and necessary bolts and other fastenings as indicated. Structural steel shall conform to ASTM A 36/A 36M. Stairs and accessories shall be galvanized . Gratings for treads and

landings shall conform to NAAMM MBG 531. Grating treads shall have slip-resistant nosings.

## 2.6 FIRE EXTINGUISHER CABINETS

Cabinets to be located in fire-rated walls shall be fire-rated type, fabricated in accordance with ASTM E 814, and shall be listed by an approved testing agency for 1- and 2-hour combustible and non-combustible wall systems. The testing agency's seal shall be affixed to each fire-rated cabinet. Cabinets shall be of the recessed type suitable for 10 pound extinguishers. Box and trim shall be of heavy gage rolled steel. Door shall be a rigid frame with full length piano type hinge and double strength (DSA) glass panel. Door and panel shall have the manufacturer's standard white baked enamel finish inside and out. Provide one 10 pound ABC type fire extinguisher with each cabinet. Provide two 10 pound ABC type fire extinguishers with standard hanging bracket in the Pump Room.

## 2.7 FLOOR BRIDGE

Provide prefabricated floor bridge where indicated in Pump Room over 2" drain line to product recovery tank. Contractor shall verify height of top of drain line and provide 1/2" clearance (minimum) over pipe. Floor bridge shall be 48" wide and shall have a capacity of 2000 lbs. Plates shall have a nonskid safety tread surface and edges shall be beveled. Floor bridge shall be constructed of aluminum or steel at the option of the contractor. Steel floor bridge shall be galvanized after fabrication. Aluminum surfaces shall have a standard mill finish.

## 2.8 VALVE PIT ACCESS DOOR AND FRAME

Valve Pit access door and frame shall be of aluminum construction. The cover shall be of the single or double leaf type as indicated and shall be designed to withstand a live load of 150 pounds per square foot (minimum). The frame shall be constructed of 1/4-inch thick aluminum reinforced concrete anchors. The cover shall be of 1/4-inch thick aluminum reinforced with aluminum stiffeners. The door shall open to 90 degrees and shall be equipped with stainless steel or heavy brass hinges, stainless steel pins, compensating springs or torsion bars, hold open arm and snap lock with release handle on the underside and removable key handle for releasing lock from above. Compensating springs or torsion bars shall be sized such that the force required to open the door will be less than 25 pounds. Doors shall drain to the channel frame to prevent rain water from entering the pit. A 1-1/2 inch drainage coupling shall be provided. Plastic drain pipe shall be provided to allow drainage from the channel frame onto the surrounding surfaces. Pit and vault doors shall be a product of a company regularly engaged in the manufacture of such doors.

# PART 3 EXECUTION

## 3.1 GENERAL INSTALLATION REQUIREMENTS

All items shall be installed at the locations shown and according to the manufacturer's recommendations. Items listed below require additional procedures as specified.

## 3.2 INSTALLATION OF VENTS

Vents shall be installed in accordance with NFPA 211. Roof housing and other accessories required for a complete installation shall be provided.

## 3.3 INSTALLATION OF PIPE GUARDS

Pipe guards shall be set vertically in concrete piers. Piers shall be constructed of, and the hollow cores of the pipe filled with, concrete specified in Section 03300 CAST-IN-PLACE STRUCTURAL CONCRETE.

## 3.4 ATTACHMENT OF HANDRAILS

Toeboards and brackets shall be installed where indicated. Splices, where required, shall be made at expansion joints. Removable sections shall be installed as indicated.

### 3.4.1 Installation of Steel Handrails

Installation shall be by base plates bolted to stringers or structural steel framework or with expansion anchors in concrete as indicated on the drawings.

## 3.5 INSTALLATION OF FIRE EXTINGUISHER CABINETS

Metal fire extinguisher cabinets shall be furnished and installed in accordance with NFPA 10 where shown on the drawings or specified.

## 3.6 TOUCH-UP PAINT

After installation, field bolt heads and nuts, field welds, and any abrasions in finishes shall be cleaned and primed with paint to the same quality as that used for shop coating. Touch-up paint for zinc-coated items shall be an approved galvanizing repair paint with a high zinc dust content.

-- End of Section --

SECTION TABLE OF CONTENTS

DIVISION 06 - WOOD AND PLASTICS

SECTION 06100A

ROUGH CARPENTRY

**02/02**

PART 1 GENERAL

1.1 REFERENCES
1.2 SUBMITTALS
1.3 DELIVERY AND STORAGE

PART 2 PRODUCTS

2.1 LUMBER
2.1.1 Grading and Marking
2.1.1.1 Lumber Products
2.1.1.2 Plywood and Other Sheathing Products
2.1.2 Sizes
2.1.3 Treatment
2.1.3.1 Lumber
2.1.3.2 Plywood
2.1.4 Moisture Content
2.1.5 Miscellaneous Wood Members
2.1.5.1 Nonstress Graded Members
2.1.5.2 Blocking
2.2 ACCESSORIES AND NAILS
2.2.1 Anchor Bolts
2.2.2 Bolts: Lag, Toggle, and Miscellaneous Bolts and Screws
2.2.3 Nails and Staples

PART 3 EXECUTION

3.1 INSTALLATION OF FRAMING
3.1.1 General
3.2 INSTALLATION OF MISCELLANEOUS WOOD MEMBERS
3.2.1 Blocking
3.2.2 Nailers and Nailing Strips

-- End of Section Table of Contents --

SECTION 06100A

ROUGH CARPENTRY
**02/02**

PART 1 GENERAL

1.1 REFERENCES

The publications listed below form a part of this specification to the extent referenced. The publications are referred to in the text by basic designation only.

AMERICAN FOREST & PAPER ASSOCIATION (AF&PA)

| | |
|---|---|
| AF&PA T101 | (1991; Supple 1993; Addenda Apr 1997; Supple T02) National Design Specification for Wood Construction |
| AF&PA T11 | (1988) Manual for Wood Frame Construction ** |

AMERICAN INSTITUTE OF TIMBER CONSTRUCTION (AITC)

| | |
|---|---|
| AITC 111 | (1979) Recommended Practice for Protection of Structural Glued Laminated Timber During Transit, Storage and Erection |

AMERICAN SOCIETY FOR TESTING AND MATERIALS (ASTM)

| | |
|---|---|
| ASTM A 307 | (2000) Carbon Steel Bolts and Studs, 60,000 PSI Tensile Strength |
| ASTM F 547 | (1977; R 1995) Definitions of Terms Relating to Nails for Use with Wood and Wood-Based Materials |

AMERICAN WOOD-PRESERVERS' ASSOCIATION (AWPA)

| | |
|---|---|
| AWPA C2 | (2000) Lumber, Timber, Bridge Ties and Mine Ties - Preservative Treatment by Pressure Processes |
| AWPA C9 | (1997) Plywood - Preservative Treatment by Pressure Processes |
| AWPA M4 | (1999) Standard for the Care of Preservative-Treated Wood Products |
| AWPA P5 | (2000) Standards for Waterborne Preservatives |

APA - THE ENGINEERED WOOD ASSOCIATION (APA)

| | |
|---|---|
| APA EWS R540C | (1996) Builder Tips Proper Storage and Handling of Glulam Beams |

FACTORY MUTUAL ENGINEERING AND RESEARCH (FM)

FM LPDS 1-49 (1995) Loss Prevention Data Sheet - Perimeter Flashing

1.2 SUBMITTALS

Government approval is required for submittals with a "G" designation; submittals not having a "G" designation are for information only. When used, a designation following the "G" designation identifies the office that will review the submittal for the Government. The following shall be submitted in accordance with Section 01330 SUBMITTAL PROCEDURES:

SD-07 Certificates

Grading and Marking;

Manufacturer's certificates (approved by an American Lumber Standards approved agency) attesting that lumber and material not normally grade marked meet the specified requirements. Certificate of Inspection for grade marked material by an American Lumber Standards Committee (ALSC) recognized inspection agency prior to shipment.

1.3 DELIVERY AND STORAGE

Materials shall be delivered to the site in undamaged condition, stored off ground in fully covered, well ventilated areas, and protected from extreme changes in temperature and humidity. Laminated timber shall be handled and stored in accordance with AITC 111 or APA EWS R540C.

PART 2 PRODUCTS

2.1 LUMBER

2.1.1 Grading and Marking

2.1.1.1 Lumber Products

Solid sawn and finger-jointed lumber shall bear an authorized gradestamp or grademark recognized by ALSC, or an ALSC recognized certification stamp, mark, or hammerbrand. Surfaces that are to be exposed to view shall not bear grademarks, stamps, or any type of identifying mark. Hammer marking will be permitted on timbers when all surfaces will be exposed to view.

2.1.1.2 Plywood and Other Sheathing Products

Materials shall bear the grademark or other identifying marks indicating grades of material and rules or standards under which produced, including requirements for qualifications and authority of the inspection organization.

2.1.2 Sizes

Lumber and material sizes shall conform to requirements of the rules or standards under which produced. Unless otherwise specified, lumber shall be surfaced on four sides. Unless otherwise specified, sizes indicated are

nominal sizes, and actual sizes shall be within manufacturing tolerances allowed by the standard under which the product is produced.

2.1.3 Treatment

Exposed areas of treated wood that are cut or drilled after treatment shall receive a field treatment in accordance with AWPA M4. Items of all-heart material of cedar, cypress, or redwood will not require preservative treatment, except when in direct contact with soil. Except as specified for all-heart material of the previously mentioned species, the following items shall be treated:

a. Wood members in contact with or within 18 inches of soil.

2.1.3.1 Lumber

Lumber shall be treated in accordance with AWPA C2 with waterborne preservatives listed in AWPA P5 to a retention level as follows:

a. 0.25 pcf intended for above ground use.

b. 0.40 pcf intended for ground contact.

2.1.3.2 Plywood

Plywood shall be treated in accordance with AWPA C9 with waterborne preservatives listed in AWPA P5 to a retention level as follows:

a. 0.25 pcf intended for above ground use.

2.1.4 Moisture Content

At the time lumber and other materials are delivered and when installed in the work their moisture content shall be as follows:

a. Treated and Untreated Lumber: 4 inches or less, nominal thickness, 19 percent maximum. 5 inches or more, nominal thickness, 23 percent maximum in a 3 inch perimeter of the timber cross-section.

b. Materials Other Than Lumber: In accordance with standard under which product is produced.

2.1.5 Miscellaneous Wood Members

2.1.5.1 Nonstress Graded Members

Members shall include bridging, corner bracing, furring, grounds, and nailing strips. Members shall be in accordance with TABLE I for the species used. Sizes shall be as follows unless otherwise shown:

| Member | Size (inch) |
|---|---|
| Corner bracing | 1 x 4. |
| Furring | 1 x 2. |

2.1.5.2 Blocking

Blocking shall be standard or number 2 grade.

2.2 ACCESSORIES AND NAILS

Markings shall identify both the strength grade and the manufacturer. Accessories and nails shall conform to the following:

2.2.1 Anchor Bolts

ASTM A 307, size as indicated, complete with nuts and washers.

2.2.2 Bolts: Lag, Toggle, and Miscellaneous Bolts and Screws

Type, size, and finish best suited for intended use. Finish options include zinc compounds, cadmium, and aluminum paint impregnated finishes.

2.2.3 Nails and Staples

ASTM F 547, size and type best suited for purpose; staples shall be as recommended by the manufacturer of the materials to be joined. For sheathing and subflooring, length of nails shall be sufficient to extend 1 inch into supports. In general, 8-penny or larger nails shall be used for nailing through 1 inch thick lumber and for toe nailing 2 inch thick lumber; 16-penny or larger nails shall be used for nailing through 2 inch thick lumber. Nails used with treated lumber and sheathing shall be galvanized. Nailing shall be in accordance with the recommended nailing schedule contained in AF&PA T11. Where detailed nailing requirements are not specified, nail size and spacing shall be sufficient to develop an adequate strength for the connection. The connection's strength shall be verified against the nail capacity tables in AF&PA T101. Reasonable judgement backed by experience shall ensure that the designed connection will not cause the wood to split. If a load situation exceeds a reasonable limit for nails, a specialized connector shall be used.

PART 3 EXECUTION

3.1 INSTALLATION OF FRAMING

3.1.1 General

General framing shall be in accordance with AF&PA T11.Members shall be closely fitted, accurately set to required lines and levels, and rigidly secured in place. Members shall be cut, notched, or bored in accordance with applicable requirements of AF&PA T101 for the passage of pipes, wires, or conduits.

3.2 INSTALLATION OF MISCELLANEOUS WOOD MEMBERS

3.2.1 Blocking

Blocking shall be provided as necessary for application of wallboard, and other materials or building items, and to provide firestopping. Blocking for firestopping shall ensure a maximum dimension of 8 feet for any concealed space. Blocking shall be cut to fit between framing members and rigidly nailed thereto.

3.2.2 Nailers and Nailing Strips

Nailers and nailing strips shall be provided as necessary for the attachment of finish materials. Nailers used in conjunction with roof deck installation shall be installed flush with the roof deck system. Stacked nailers shall be assembled with spikes or nails spaced not more than 18 inches on center and staggered. Beginning and ending nails shall not be more than 6 inches for nailer end. Ends of stacked nailers shall be offset approximately 12 inches in long runs and alternated at corners. Anchors shall extend through the entire thickness of the nailer. Strips shall be run in lengths as long as practicable, butt jointed, cut into wood framing members when necessary, and rigidly secured in place. Nailers and nailer installation for Factory Mutual wind uplift rated roof systems specified in other Sections of these specifications shall conform to the recommendations contained in FM LPDS 1-49.

-- End of Section --

SECTION TABLE OF CONTENTS

DIVISION 06 - WOOD AND PLASTICS

SECTION 06410A

LAMINATE CLAD ARCHITECTURAL CASEWORK

**11/01**

PART 1 GENERAL

1.1 REFERENCES
1.2 GENERAL DESCRIPTION
1.3 SUBMITTALS
1.4 QUALITY ASSURANCE
1.5 DELIVERY AND STORAGE
1.6 SEQUENCING AND SCHEDULING
1.7 PROJECT/SITE CONDITIONS

PART 2 PRODUCTS

2.1 WOOD MATERIALS
2.1.1 Lumber
2.1.1.1 Standing and Running Trim
2.1.2 Panel Products
2.1.2.1 Plywood
2.1.2.2 Particleboard
2.1.2.3 Medium Density Fiberboard
2.2 HIGH PRESSURE DECORATIVE LAMINATE (HPDL)
2.2.1 Horizontal General Purpose Standard (HGS) Grade
2.2.2 Vertical General Purpose Standard (VGS) Grade
2.2.3 Horizontal General Purpose Postformable (HGP) Grade
2.2.4 Vertical General Purpose Postformable (VGP) Grade
2.2.5 Cabinet Liner Standard (CLS) Grade
2.2.6 Backing Sheet (BK) Grade
2.3 THERMOSET DECORATIVE OVERLAYS (MELAMINE)
2.4 CABINET HARDWARE
2.5 FASTENERS
2.6 ADHESIVES, CAULKS, AND SEALANTS
2.6.1 Adhesives
2.6.1.1 Wood Joinery
2.6.1.2 Laminate Adhesive
2.6.2 Caulk
2.6.3 Sealant
2.7 ACCCESSORIES
2.7.1 Grommets
2.8 FABRICATION

PART 3 EXECUTION

3.1 INSTALLATION
3.1.1 Anchoring Systems
3.1.1.1 Floor
3.1.1.2 Wall
3.1.2 Countertops

3.1.2.1 Loose Splashes
3.1.3 Hardware
3.1.4 Doors, Drawers and Removable Panels
3.1.5 Plumbing Fixtures

-- End of Section Table of Contents --

SECTION 06410A

LAMINATE CLAD ARCHITECTURAL CASEWORK
**11/01**

PART 1 GENERAL

1.1 REFERENCES

The publications listed below form a part of this specification to the extent referenced. The publications are referred to in the text by basic designation only.

AMERICAN NATIONAL STANDARDS INSTITUTE (ANSI)

| | |
|---|---|
| ANSI A161.2 | (1998) Decorative Laminate Countertops, Performance Standards for Fabricated High Pressure |
| ANSI A208.1 | (1999) Particleboard Mat Formed Woods |
| ANSI A208.2 | (1994) Medium Density Fiberboard (MDF) |

AMERICAN SOCIETY FOR TESTING AND MATERIALS (ASTM)

| | |
|---|---|
| ASTM D 1037 | (1999) Evaluating Properties of Wood-Base Fiber and Particle Panel Materials |
| ASTM F 547 | (1977; R 1995) Definitions of Terms Relating to Nails for Use with Wood and Wood-Based Materials |

ARCHITECTURAL WOODWORK INSTITUTE (AWI)

| | |
|---|---|
| AWI Qual Stds | (1999) Architectural Woodwork Quality Standards |

BUILDERS HARDWARE MANUFACTURERS ASSOCIATION (BHMA)

| | |
|---|---|
| BHMA A156.9 | (1994) Cabinet Hardware |

NATIONAL ELECTRICAL MANUFACTURERS ASSOCIATION (NEMA)

| | |
|---|---|
| NEMA LD 3 | (1995) High-Pressure Decorative Laminates |

WINDOW AND DOOR MANUFACTURERS ASSOCIATION (WDMA)

| | |
|---|---|
| WDMA I.S. 1-A | (1997) Architectural Wood Flush Doors |

1.2 GENERAL DESCRIPTION

Work in this section includes laminate clad custom casework computer desk and toilet room vanity as shown on the drawings and as described in this specification. This Section includes high-pressure laminate surfacing and cabinet hardware. The Contractor shall comply with EPA requirements in accordance with Section 01670 RECYCLED / RECOVERED MATERIALS. All exposed

and semi-exposed surfaces, whose finish is not otherwise noted on the drawings or finish schedule, shall be sanded smooth and shall receive a clear finish of polyurethane. Wood finish may be shop finished or field finish.

## 1.3 SUBMITTALS

Government approval is required for submittals with a "G" designation; submittals not having a "G" designation are for information only. When used, a designation following the "G" designation identifies the office that will review the submittal for the Government. All items designated with a "G", including product literature, calculations, component data, certificates, diagrams, drawings, and samples shall be submitted concurrently in one complete system submittal. Omission of any required submittal item from the package shall be sufficient cause for disapproval of the entire submittal. Unless otherwise indicated in the submittal review commentary, disapproval of any item within the package shall require a re-submittal of the entire system package, in which all deficiencies shall be corrected. The following shall be submitted in accordance with Section 01330 SUBMITTAL PROCEDURES.

SD-02 Shop Drawings

Shop Drawings; G-AE

Shop drawings showing all fabricated casework items in plan view, elevations and cross-sections to accurately indicate materials used, details of construction, dimensions, methods of fastening and erection, and installation methods proposed. Shop drawing casework items shall be clearly cross-referenced to casework items located on the project drawings. Shop drawings shall include a color schedule of all casework items to include all countertop, exposed, and semi-exposed cabinet finishes to include finish material manufacturer, pattern, and color.

SD-04 Samples

Plastic Laminates; G-AE

Two samples of each plastic laminate pattern and color. Samples shall be a minimum of 5 by 7 inches in size.

Cabinet Hardware; G-AE

One sample of each cabinet hardware item specified to include hinges, pulls, drawer glides, and keyboard pull.

SD-07 Certificates

Quality Assurance;
Laminate Clad Casework;

A quality control statement which illustrates compliance with and understanding of AWI Qual Stds requirements, in general, and the specific AWI Qual Stds requirements provided in this specification. The quality control statement shall also certify a minimum of ten years contractor's experience in laminate clad casework fabrication and construction. The quality control

statement shall provide a list of a minimum of five successfully completed projects of a similar scope, size, and complexity.

## 1.4 QUALITY ASSURANCE

Unless otherwise noted on the drawings, all materials, construction methods, and fabrication shall conform to and comply with the premium grade quality standards as outlined in AWI Qual Stds, Section 400G and Section 400B for laminate clad cabinets. These standards shall apply in lieu of omissions or specific requirements in this specification. Contractors and their personnel engaged in the work shall be able to demonstrate successful experience with work of comparable extent, complexity and quality to that shown and specified. Contractor must demonstrate knowledge and understanding of AWI Qual Stds requirements for the quality grade indicated.

## 1.5 DELIVERY AND STORAGE

Casework may be delivered knockdown or fully assembled. All units shall be delivered to the site in undamaged condition, stored off the ground in fully enclosed areas, and protected from damage. The storage area shall be well ventilated and not subject to extreme changes in temperature or humidity.

## 1.6 SEQUENCING AND SCHEDULING

Work shall be coordinated with other trades. Units shall not be installed in any room or space until painting, and ceiling installation are complete within the room where the units are located. Floor cabinets shall be installed before finished flooring materials are installed.

## 1.7 PROJECT/SITE CONDITIONS

Field measurements shall be verified as indicated in the shop drawings before fabrication.

# PART 2 PRODUCTS

## 2.1 WOOD MATERIALS

### 2.1.1 Lumber

All framing lumber shall be kiln-dried Grade III to dimensions as shown on the drawings. Frame front, where indicated on the drawings, shall be nominal 3/4 inch hardwood.

#### 2.1.1.1 Standing and Running Trim

Standing or running trim casework components which are specified to receive a transparent finish shall be red oak hardwood species, plain sawn. AWI grade shall be premium . Location, shape, and dimensions shall be as indicated on the drawings.

### 2.1.2 Panel Products

#### 2.1.2.1 Plywood

All plywood panels used for framing purposes shall be veneer core hardwood plywood, AWI Qual Stds Grade AA. Nominal thickness of plywood panels shall be as indicated in this specification and on the drawings.

2.1.2.2 Particleboard

All particleboard shall be industrial grade, medium density (40 to 50 pounds per cubic foot), 3/4 inch thick. A moisture-resistant particleboard in grade Type 2-M-2 or 2-M-3 shall be used as the substrate for plastic laminate covered countertops, backsplashes, components as located on the drawings and other areas subjected to moisture. Particleboard shall meet the minimum standards listed in ASTM D 1037 and ANSI A208.1.

2.1.2.3 Medium Density Fiberboard

Medium density fiberboard (MDF) shall be an acceptable panel substrate where noted on the drawings. Medium density fiberboard shall meet the minimum standards listed in ANSI A208.2.

2.2 HIGH PRESSURE DECORATIVE LAMINATE (HPDL)

All plastic laminates shall meet the requirements of NEMA LD 3 and ANSI A161.2 for high-pressure decorative laminates. Design, colors, surface finish and texture, and locations shall be as indicated on the drawings . Plastic laminate types and nominal minimum thicknesses for casework components shall be as indicated in the following paragraphs.

2.2.1 Horizontal General Purpose Standard (HGS) Grade

Horizontal general purpose standard grade plastic laminate shall be 0.048 inches (plus or minus 0.005 inches) in thickness. This laminate grade is intended for horizontal surfaces where postforming is not required.

2.2.2 Vertical General Purpose Standard (VGS) Grade

Vertical general purpose standard grade plastic laminate shall be 0.028 inches (plus or minus 0.004 inches) in thickness. This laminate grade is intended for exposed exterior vertical surfaces of casework components where postforming is not required.

2.2.3 Horizontal General Purpose Postformable (HGP) Grade

Horizontal general purpose postformable grade plastic laminate shall be 0.042 inches (plus or minus 0.005 inches) in thithickness. This laminate grade is intended for horizontal surfaces where post forming is required.

2.2.4 Vertical General Purpose Postformable (VGP) Grade

Vertical general purpose postformable grade plastic laminate shall be 0.028 inches (plus or minus 0.004 inches) in thickness. This laminate grade is intended for exposed exterior vertical surfaces of components where postforming is required for curved surfaces.

2.2.5 Cabinet Liner Standard (CLS) Grade

Cabinet liner standard grade plastic laminate shall be 0.020 inches in thickness. This laminate grade is intended for light duty semi-exposed interior surfaces of casework components.

2.2.6 Backing Sheet (BK) Grade

Undecorated backing sheet grade laminate is formulated specifically to be

used on the backside of plastic laminated panel substrates to enhance dimensional stability of the substrate. Backing sheet thickness shall be 0.020 inches. Backing sheets shall be provided for all laminated casework components where plastic laminate finish is applied to only one surface of the component substrate.

## 2.3 THERMOSET DECORATIVE OVERLAYS (MELAMINE)

Thermoset decorative overlays (melamine panels) shall be used for casework cabinet interior and drawer interior surfaces.

## 2.4 CABINET HARDWARE

All hardware shall conform to BHMA A156.9, unless otherwise noted, and shall consist of the following components:

a. Door Hinges: butt hinges type, 2-3/4" (70mm), 5-knuckle steel hinges made from 0.095-inch (2.4mm) thick metal,BHMA No. A156.9, B01521.

b. Cabinet Pulls: shall be similar to lamp flush type SD-160 pulls.

c. Drawer Slide: Side mounted bottom edge drawer slide type, BHMA No. B05011 with full extension and a minimum 100 pound load capacity. Slides shall include an integral stop to avoid accidental drawer removal.

d. Pullout Keyboard Drawer:

1) Keyboard bracket shall be Model No. 50-8-1020, as manufactured by Nova Office Furniture Inc. of Effingham, IL 62401 or equal.

## 2.5 FASTENERS

Nails, screws, and other suitable fasteners shall be the size and type best suited for the purpose and shall conform to ASTM F 547 where applicable.

## 2.6 ADHESIVES, CAULKS, AND SEALANTS

### 2.6.1 Adhesives

Adhesives shall be of a formula and type recommended by AWI. Adhesives shall be selected for their ability to provide a durable, permanent bond and shall take into consideration such factors as materials to be bonded, expansion and contraction, bond strength, fire rating, and moisture resistance. Adhesives shall meet local regulations regarding VOC emissions and off-gassing.

#### 2.6.1.1 Wood Joinery

Adhesives used to bond wood members shall be a Type II for interior use urea-formaldehyde resin formula . Adhesives shall withstand a bond test as described in WDMA I.S. 1-A.

#### 2.6.1.2 Laminate Adhesive

Adhesive used to join high-pressure decorative laminate to wood shall be a water-based contact adhesive .

2.6.2 Caulk

Caulk used to fill voids and joints between laminated components and between laminated components and adjacent surfaces shall be clear, 100 percent silicone.

2.6.3 Sealant

Sealant shall be of a type and composition recommended by the substrate manufacturer to provide a moisture barrier at sink cutouts and all other locations where unfinished substrate edges may be subjected to moisture.

2.7 ACCCESSORIES

2.7.1 Grommets

Grommets shall be plastic material for cutouts with a diameter of 3 inches. Locations shall be as indicated on the drawings.

2.8 FABRICATION

Fabrication and assembly of components shall be accomplished at the shop site to the maximum extent possible. Construction and fabrication of cabinets and their components shall meet or exceed the requirements for AWI premium grade unless otherwise indicated in this specification.

PART 3 EXECUTION

3.1 INSTALLATION

Installation shall comply with applicable requirements for AWI Qual Stds premium quality standards. Countertops and fabricated assemblies shall be installed level, plumb, and true to line, in locations shown on the drawings. Cabinets and other laminate clad casework assemblies shall be attached and anchored securely to the floor and walls with mechanical fasteners that are appropriate for the wall and floor construction.

3.1.1 Anchoring Systems

3.1.1.1 Floor

Computer desk and toilet room vanity shall have fasteners that are not visible from the finished side of the casework assembly. Where assembly abutts a wall surface, anchoring shall include a minimum 1/2 inch thick lumber or panel product hanging strip, minimum 2-1/2 inch width; securely attached to the top of the wall side of the cabinet back.

3.1.1.2 Wall

Shelving to be wall mounted shall utilize minimum 1/2 inch thick lumber or panel product hanging strips, minimum 2-1/2 inch width; securely attached to the wall side of the cabinet back, both top and bottom.

3.1.2 Countertops

Countertops shall be installed in locations as indicated on the drawings. Countertops shall be fastened to supporting casework structure with mechanical fasteners, hidden from view. All joints formed by the countertop or countertop splash and adjacent wall surfaces shall be filled

with a clear silicone caulk.

3.1.2.1 Loose Splashes

Loose side splashes shall be adhered to both the countertop surface perimeter and the adjacent wall surface with adhesives appropriate for the type of materials to be adhered. Joints between the countertop surface and splash shall be filled with clear silicone caulk in a smooth consistent concave bead. Bead size shall be the minimum necessary to fill the joint and any surrounding voids or cracks.

3.1.3 Hardware

Casework hardware shall be installed in types and locations as indicated on the drawings.

3.1.4 Doors, Drawers and Removable Panels

The fitting of doors, drawers and removable panels shall be accomplished within target fitting tolerances for gaps and flushness in accordance with AWI Qual Stds premium grade requirements.

3.1.5 Plumbing Fixtures

Sinks, sink hardware, and other plumbing fixtures shall be installed in locations as indicated on the drawings and in accordance with the mechanical drawings and specifications.

-- End of Section --

SECTION TABLE OF CONTENTS

DIVISION 07 - THERMAL AND MOISTURE PROTECTION

SECTION 07510A

BUILT-UP ROOFING

**10/01**

PART 1 GENERAL

1.1 REFERENCES
1.2 SUBMITTALS
1.3 STORAGE OF MATERIALS

PART 2 PRODUCTS

2.1 PRIMER
2.2 BITUMEN
2.2.1 Asphalt
2.2.2 Coal-Tar Bitumen
2.3 BITUMINOUS CEMENT
2.4 FELT
2.4.1 Base Sheet
2.4.2 Venting Inorganic Base Sheet
2.4.3 Glass Roofing Felt
2.4.4 Organic Felt Base
2.4.5 Organic Felt
2.5 NAILS AND FASTENERS
2.6 WOVEN GLASS FABRIC
2.7 INSULATION
2.8 GLASS MAT GYPSUM ROOF BOARD
2.9 FLASHINGS
2.10 AGGREGATE

PART 3 EXECUTION

3.1 COORDINATION
3.1.1 Insulation
3.1.2 Sheet Metalwork
3.2 ENVIRONMENTAL CONDITIONS
3.3 PREPARATION REQUIREMENTS
3.4 CONDITION OF SURFACES
3.5 MECHANICAL APPLICATION DEVICES
3.6 PRIMING
3.7 HEATING OF BITUMEN
3.8 BITUMEN STOPS
3.9 BITUMEN APPLICATION
3.10 APPLICATION OF FELTS
3.10.1 On Concrete or Insulation Surfaces
3.11 MECHANICAL FASTENING
3.12 FLASHINGS
3.12.1 Base Flashings
3.12.2 Strip Flashings
3.13 AGGREGATE SURFACING

-- End of Section Table of Contents --

SECTION 07510A

BUILT-UP ROOFING
**10/01**

PART 1 GENERAL

1.1 REFERENCES

The publications listed below form a part of this specification to the extent referenced. The publications are referred to in the text by basic designation only.

ASTM INTERNATIONAL (ASTM)

| | |
|---|---|
| ASTM C 1177/C 1177M | (1999) Glass Mat Gypsum Substrate for Use as Sheathing |
| ASTM D 41 | (1994) Asphalt Primer Used in Roofing, Dampproofing, and Waterproofing |
| ASTM D 43 | (2000) Coal Tar Primer Used in Roofing, Dampproofing, and Waterproofing |
| ASTM D 226 | (1997, Rev A) Asphalt-Saturated Organic Felt Used in Roofing and Waterproofing |
| ASTM D 227 | (1998) Coal-Tar Saturated Organic Felt Used in Roofing and Waterproofing |
| ASTM D 312 | (2000) Asphalt Used in Roofing |
| ASTM D 448 | (1998) Sizes of Aggregate for Road and Bridge Construction |
| ASTM D 450 | (1996) Coal-Tar Pitch Used in Roofing, Dampproofing, and Waterproofing |
| ASTM D 1668 | (1997a) Glass Fabrics (Woven and Treated) for Roofing and Waterproofing |
| ASTM D 1863 | (1993; R 1996) Mineral Aggregate Used on Built-Up Roofs |
| ASTM D 1864 | (1989; R 2002) Moisture in Mineral Aggregate Used on Built-Up Roofs |
| ASTM D 2178 | (1997a) Asphalt Glass Felt Used in Roofing and Waterproofing |
| ASTM D 2626 | (1997b) Asphalt-Saturated and Coated Organic Felt Base Sheet Used in Roofing |
| ASTM D 4022 | (1994) Coal Tar Roof Cement, Asbestos |

| | |
|---|---|
| | Containing |
| ASTM D 4586 | (1993; R 1999) Asphalt Roof Cement, Asbestos Free |
| ASTM D 4601 | (1998) Asphalt-Coated Glass Fiber Base Sheet Used in Roofing |
| ASTM D 4897 | (1998) Asphalt-Coated Glass-Fiber Venting Base Sheet Used in Roofing |
| FM GLOBAL (FM) | |
| FM P7825c | (1998) Approval Guide Building Materials |

1.2 SUBMITTALS

Government approval is required for submittals with a "G" designation; submittals not having a "G" designation are for information only. When used, a designation following the "G" designation identifies the office that will review the submittal for the Government. The following shall be submitted in accordance with Section 01330 SUBMITTAL PROCEDURES:

SD-07 Certificates

Bitumen;
Felt;

1.3 STORAGE OF MATERIALS

Felts, fabrics, and roll roofing shall be kept dry before, during, and after delivery to the site and shall be stored in an enclosed building or in a closed trailer, and stored on end 1 level high. Felt rolls shall be maintained at a temperature above 50 degrees F for 24 hours immediately before laying. Aggregate shall be kept dry as defined by ASTM D 1863.

PART 2 PRODUCTS

2.1 PRIMER

ASTM D 41 for asphalt roofing systems; ASTM D 43 for coal-tar roofing systems.

2.2 BITUMEN

2.2.1 Asphalt

ASTM D 312, Type II on slopes from 1/4 inch per foot up to and including 1/2 inch per foot; Type II or Type III on slopes above1/2 inch per foot up to and including 1 inch per foot; Type III on slopes above 1 inch per foot up to and including 3 inches per foot. Bills of lading shall indicate the flash point and equiviscous temperature (EVT) or this information shall be shown on labels for each container of asphalt.

2.2.2 Coal-Tar Bitumen

ASTM D 450, Type III, for 1/4 inch per foot slope as an option to asphalt.

## 2.3 BITUMINOUS CEMENT

ASTM D 4586 for use with asphalt roofing systems. ASTM D 4022 for use with coal-tar roofing systems; preference shall be given to cements whose mineral fillers exclude asbestos fibers.

## 2.4 FELT

### 2.4.1 Base Sheet

Base sheet shall conform to ASTM D 4601, Type II, with no perforations.

### 2.4.2 Venting Inorganic Base Sheet

ASTM D 4897, Type II.

### 2.4.3 Glass Roofing Felt

ASTM D 2178, Type IV or VI, except felts for coal tar systems shall be impregnated with a bituminous resin coating which is compatible with coal tar bitumen.

### 2.4.4 Organic Felt Base

ASTM D 2626 for use with asphalt roofing system.

### 2.4.5 Organic Felt

ASTM D 226 for use with asphalt roofing system and ASTM D 227 for use with coal-tar roofing system. Organic felts may be used for bitumen stops, and edge envelopes.

## 2.5 NAILS AND FASTENERS

Nails and fasteners shall be an approved type recommended by the roofing felt manufacturer. Fasteners for steel or concrete deck shall conform to FM P7825c for Class I roof deck construction, to withstand an uplift pressure of 90 pounds per square foot.

## 2.6 WOVEN GLASS FABRIC

ASTM D 1668, Type I for asphalt roofing systems and Type II for coal-tar roofing systems.

## 2.7 INSULATION

Insulation shall be fiberboard, composite board, expanded perlite, mineral fiber, or polyisocyanurate. Top layer shall be minimum 3/4 inch thick fiberboard, mineral fiber or perlite.

## 2.8 GLASS MAT GYPSUM ROOF BOARD

Glass mat gypsum roof board shall be in accordance with ASTM C 1177/C 1177M, flame spread - 0, smoke developed - 0, 500 psi Class A non-combustible. The glass mat gypsum roof board shall be a minimum 1/4 inch thickness.

## 2.9 FLASHINGS

Bituminous flashings in accordance with these specifications shall be used

throughout unless otherwise specified or indicated.

## 2.10 AGGREGATE

Water-worn gravel, crushed stone, or crushed slag, conforming to ASTM D 1863, or marble, expanded slag, or expanded shale, conforming to ASTM D 1863 except density not less than 55 pcf. Aggregate conforming to gradation sizes No. 6, No. 7, and No. 67 in conformance with ASTM D 448 is acceptable provided other requirements of ASTM D 1863 are met. 2 percent maximum moisture content as determined by ASTM D 1864. Aggregate shall be light colored and opaque. Limestone, volcanic rock, crushed shells, and cinders are not acceptable.

# PART 3 EXECUTION

## 3.1 COORDINATION

The entire roofing system, excluding flood coat and aggregate surfacing, shall be finished in 1 operation up to the line of termination at end of day's work. Glaze coating may be considered part of the flood coat as specified in paragraph GLAZE COAT. Phased construction will not be permitted.

### 3.1.1 Insulation

Application of roofing shall immediately follow application of insulation as a continuous operation. Roofing operations shall be coordinated with insulation work so that all roof insulation applied each day is waterproofed the same day.

### 3.1.2 Sheet Metalwork

Roofing operations shall be coordinated with sheet metalwork so that sheet metal items are installed to permit continuous roof surfacing operations the same day felts are installed. Sheet metalwork is specified in Section 07600 SHEET METALWORK, GENERAL.

## 3.2 ENVIRONMENTAL CONDITIONS

Air temperature shall be above 40 degrees F and there shall be no visible ice, frost, or moisture on the roof deck at the time roofing is installed.

## 3.3 PREPARATION REQUIREMENTS

The substrate construction of a bay or section of the building shall be completed before roofing work is begun thereon. Roofing applied directly on concrete shall not be scheduled until frothing or bubbling does not occur when hot bitumen is applied to the concrete and until the hot bitumen sticks tightly to the concrete. Vents and other items penetrating the roof shall be secured in position and properly prepared for flashing. Nailers, curbs and other items attached to roof surface shall be in place before roofing is begun.

## 3.4 CONDITION OF SURFACES

Surfaces shall be inspected and approved immediately before application of

roofing and flashings. The roofing and flashings shall be applied to a smooth and firm surface free from ice, frost, visible moisture, dirt, projections, and foreign materials. Prior to application of primer on precast concrete decks, joints shall be covered with a 4 inch strip of roofing felt, embedded in and coated with bituminous cement.

## 3.5 MECHANICAL APPLICATION DEVICES

Mechanical application devices shall be mounted on pneumatic-tired wheels, and shall be designed and maintained to operate without damaging the insulation, roofing membrane, or structural components.

## 3.6 PRIMING

Concrete surfaces to receive bitumen shall be uniformly coated with primer at a rate of not less than 1 gallon per square and allowed to dry. Primer shall be compatible with the bitumen to be used.

## 3.7 HEATING OF BITUMEN

Asphalt shall not be heated higher than 75 degrees F above the EVT or 50 degrees below the flash point or 525 degrees F (maximum) whichever is lower. EVT and flash point temperatures of asphalt in the kettle shall be conspicuously posted on the kettle. Coal tar bitumen shall not be heated above as recommended by the roofing manufacturer. Heating kettles shall be provided with automatic thermostatic controls and an accurate thermometer. Kettle operators shall be in attendance at all times during the heating to ensure that the maximum temperature specified is not exceeded. Equipment utilizing flame-heat shall not be placed on the roof.

## 3.8 BITUMEN STOPS

Bitumen stops shall be installed at roof edges, openings and vertical projections before application of roofing plies unless otherwise recommended by the manufacturer's printed instructions. Bitumen stops shall be formed of two 18 inch wide strips of organic felt. Nine inches of the width shall be attached to the roof surface with 9 inches extending beyond the edge. The first strip shall be applied in a 9 inch wide layer of bituminous roofing cement and nailed 1/2 inch from the roof edge at 6 inch spacing. The second strip shall be applied to the first in a 9 inch wide mopping of bitumen. The free portion of each strip shall be protected from damage throughout the roofing period. After the roofing plies are in place, the free portion of each strip shall be folded back over the roofing membrane and embedded in a continuous coating of bituminous cement and secured with roofing nails spaced 3 inches on centers.

## 3.9 BITUMEN APPLICATION

Asphalt shall be applied within a range of 25 degrees F below to 25 degrees F above the EVT. Temperature of coal-tar bitumen at the time it is applied shall be in accordance with the bitumen manufacturer's recommendations. Application temperatures shall be measured at the mop bucket or mechanical applicator. Bitumen at a temperature below the recommended temperature shall be returned to the kettle. Each layer of felt shall be laid in not less than 20 pounds nor more than 35 pounds of asphalt per square or not less than 30 pounds nor more than 35 pounds of coal-tar bitumen per squar. Where solid moppings are required, the following requirements as evidenced in any one roof cut-out sample shall apply:

a. Overlapping voids between two or more plies are not acceptable.

b. The maximum length of any individual void that is encapsulated in bitumen shall be 2 inches.

c. The total length of all voids encapsulated in bitumen shall not exceed 4 inches between any two plies.

d. Dry voids (the absence of bitumen between plies) are not acceptable.

e. Voids continuous through the specimen are not acceptable.

f. Visual interply moisture in voids is not acceptable.

## 3.10 APPLICATION OF FELTS

Felt plies shall be laid at right angles to the slope of the deck with minimum 6 inch end-laps staggered at least 12 inches. Felts shall be applied in 36 inch widths with 24 2/3 inch side laps and starter sheets 12, 24 and 36 inches wide along eaves to maintain 4 full plies including the base sheet when used. The full 36 inch width of each ply shall be placed in hot bitumen immediately behind the applicator. A broom or follow through tool shall be used to eliminate air pockets and obtain complete adhesion between plies. Bitumen shall be visible beyond all edges of each ply as it is being installed. Plies shall be laid free of wrinkles, creases or fishmouths. Each layer of roofing felt shall be carried up to the top of the cant. Workers shall not walk on mopped surfaces when the bitumen is fluid. For slopes exceeding 1/2 inch per foot, each felt ply, other than venting base sheet, shall be nailed 2 inches and 6 inches from upper edge with nails spaced 12 inches on centers in each row.

### 3.10.1 On Concrete or Insulation Surfaces

Four plies of 36 inch wide glass roofing felts shall be placed shingle-fashion in solid mopped bitumen.

## 3.11 MECHANICAL FASTENING

Nails and fasteners for securing roofing shall be flush driven through flat metal disks of not less than 1 inch diameter. Metal disks may be omitted where heads of fasteners are equivalent in size to the 1 inch diameter disks. Fasteners, when required, shall be spaced within 20 percent of the indicated spacing dimensions. There shall be no less than the total number of indicated fasteners in any 100 square feet area. Fastener pull-out resistance shall be not less than 40 pounds each.

## 3.12 FLASHINGS

Flashings shall be provided in the angles formed at walls and other vertical surfaces and where required to make the work watertight. Bituminous flashings described below shall be used, except where metal flashings are specified in other sections of the specifications. Flashings shall be provided and installed immediately after the top ply of felt is placed and before the flood coat and aggregate are placed, adjacent to the flashing. Modified bituminous flashing may be used when it is specified in the roofing manufacturer's instructions.

3.12.1 Base Flashings

Base Flashings shall be a 3-ply system using woven glass fabric, laid in roofing cement, with mineral surfaced roll roofing as the outer ply. The top of the base flashing shall be at least 8 inches above the roof membrane surface. Mineral surfaced roofing strips shall be cut from the width of the rolls, and shall extend from the reglet or top of curb onto the roof at least 2 inches beyond the widest flashing ply. Laps shall be well cemented, and where possible, shall be shingled in a direction down slope or away from the prevailing wind. The top edge of base flashing systems shall be nailed a maximum of 8 inches on center.

3.12.2 Strip Flashings

Sheet metal flashings, bitumen stops and gravel stops installed over the roofing top ply shall be strip flashed with 2 layers of roofing felt, 9 inches and 12 inches wide and successively cemented in place.

3.13 AGGREGATE SURFACING

Provide aggregate surfacing materials after felt flashings, roof drain flashing, work of other trades, tests, repairs, and corrective action have been completed and approved. Embed aggregate surfacing in a flood coat of hot asphalt poured from a dipper or approved spreading device at a rate of 60 pounds per 100 square feet. Aggregate surfacing materials shall be spread on the hot bitumen at a rate of 400 pounds per square for gravel or 300 pounds per square for other approved surfacing aggregate. To aid in proper embedment, aggregate may be lightly rolled, provided that there is no damage to roofing membrane. Remove loose aggregate from roof.

-- End of Section --

SECTION TABLE OF CONTENTS

DIVISION 07 - THERMAL AND MOISTURE PROTECTION

SECTION 07600

FLASHING AND SHEET METAL

**02/03**

PART 1 GENERAL

1.1 REFERENCES
1.2 General Requirements
1.3 SUBMITTALS
1.4 DELIVERY, HANDLING, AND STORAGE

PART 2 PRODUCTS

2.1 MATERIALS
2.1.1 Exposed Sheet Metal Items
2.1.2 Drainage
2.1.3 Copper, Sheet and Strip
2.1.4 Lead Sheet
2.1.5 Stainless Steel
2.1.6 Aluminum Alloy Sheet and Plate
2.1.6.1 Alclad
2.1.6.2 Finish
2.1.7 Aluminum Alloy, Extruded Bars, Rods, Shapes, and Tubes
2.1.8 Solder
2.1.9 Building Paper
2.1.10 Fasteners
2.1.11 Louver Screen

PART 3 EXECUTION

3.1 INSTALLATION
3.1.1 Workmanship
3.1.2 Nailing
3.1.3 Cleats
3.1.4 Bolts, Rivets, and Screws
3.1.5 Seams
3.1.5.1 Flat-lock Seams
3.1.5.2 Lap Seams
3.1.6 Soldering
3.1.6.1 Edges
3.1.7 Welding and Mechanical Fastening
3.1.7.1 Welding of Aluminum
3.1.7.2 Mechanical Fastening of Aluminum
3.1.8 Protection from Contact with Dissimilar Materials
3.1.8.1 Copper or Copper-bearing Alloys
3.1.8.2 Aluminum
3.1.8.3 Metal Surfaces
3.1.8.4 Wood or Other Absorptive Materials
3.1.9 Expansion and Contraction
3.1.10 Fascias

3.1.10.1 Edge Strip
3.1.10.2 Joints
3.1.11 Metal Drip Edge
3.1.12 Gutters
3.1.13 Downspouts
3.1.13.1 Terminations
3.1.14 Expansion Joints
3.1.15 Copings
3.1.16 Installation of Louvers
3.2 PAINTING
3.3 CLEANING
3.4 REPAIRS TO FINISH
3.5 FIELD QUALITY CONTROL
3.5.1 Procedure

-- End of Section Table of Contents --

SECTION 07600

FLASHING AND SHEET METAL
**02/03**

PART 1 GENERAL

1.1 REFERENCES

The publications listed below form a part of this specification to the extent referenced. The publications are referred to in the text by the basic designation only.

AMERICAN SOCIETY FOR TESTING AND MATERIALS (ASTM)

| | |
|---|---|
| ASTM A 167 | (1999) Stainless and Heat-Resisting Chromium-Nickel Steel Plate, Sheet, and Strip |
| ASTM B 32 | (2000e1) Solder Metal |
| ASTM B 209 | (2001) Aluminum and Aluminum-Alloy Sheet and Plate |
| ASTM B 221 | (2000) Aluminum and Aluminum-Alloy Extruded Bars, Rods, Wire, Profiles, and Tubes |
| ASTM B 370 | (1998) Copper Sheet and Strip for Building Construction |
| ASTM D 226 | (1997, Rev A) Asphalt-Saturated Organic Felt Used in Roofing and Waterproofing |

AMERICAN WELDING SOCIETY (AWS)

| | |
|---|---|
| AWS D1.2 | (1997) Structural Welding Code Aluminum |

SHEET METAL & AIR CONDITIONING CONTRACTORS' NATIONAL ASSOCIATION (SMACNA)

| | |
|---|---|
| SMACNA Arch. Manual | (1993; Errata; Addenda Oct 1997) Architectural Sheet Metal Manual |

1.2 General Requirements

Sheet metalwork shall be accomplished to form weathertight construction without waves, warps, buckles, fastening stresses or distortion, and shall allow for expansion and contraction. Cutting, fitting, drilling, and other operations in connection with sheet metal required to accommodate the work of other trades shall be performed by sheet metal mechanics. Application of bituminous strip flashing over various sheet metal items is covered in Section 07510A BUILT-UP ROOFING. Installation of sheet metal items used in conjunction with roofing shall be coordinated with roofing work to permit continuous roofing operations.

1.3 SUBMITTALS

Government approval is required for submittals with a "G" designation; submittals not having a "G" designation are for information only or as otherwise designated. When used, a designation following the "G" designation identifies the office that will review the submittal for the Government. The following shall be submitted in accordance with Section 01330 SUBMITTAL PROCEDURES:

SD-02 Shop Drawings

Gutters; G-AO

Downspouts; G-AO

Expansion joints; G-AO

Fascias; G-AO

Copings; G-AO

Drip edge; G-AO

Indicate thicknesses, dimensions, fastenings and anchoring methods, expansion joints, and other provisions necessary for thermal expansion and contraction. Scaled manufacturer's catalog data may be submitted for factory fabricated items.

1.4 DELIVERY, HANDLING, AND STORAGE

Package and protect materials during shipment. Uncrate and inspect materials for damage, dampness, and wet-storage stains upon delivery to the job site. Remove from the site and replace damaged materials that cannot be restored to like-new condition. Handle sheet metal items to avoid damage to surfaces, edges, and ends. Store materials in dry, weather-tight, ventilated areas until immediately before installation.

PART 2 PRODUCTS

2.1 MATERIALS

Lead, lead-coated metal, and galvanized steel shall not be used. Any metal listed by SMACNA Arch. Manual for a particular item may be used, unless otherwise specified or indicated. Materials shall conform to the requirements specified below and to the thicknesses and configurations established in SMACNA Arch. Manual. Different items need not be of the same metal, except that if copper is selected for any exposed item, all exposed items shall be copper.

Furnish sheet metal items in 8 to 10 foot lengths. Single pieces less than 8 feet long may be used to connect to factory-fabricated inside and outside corners, and at ends of runs. Factory fabricate corner pieces with minimum 12 inch legs. Provide accessories and other items essential to complete the sheet metal installation. These accessories shall be made of the same materials as the items to which they are applied. Fabricate sheet metal items of the materials specified below and to the gage, thickness, or weight shown in Table I at the end of this section. Sheet metal items shall have mill finish unless specified otherwise. Where more than one

material is listed for a particular item in Table I, each is acceptable and may be used except as follows:

2.1.1 Exposed Sheet Metal Items

Shall be of the same material. The following items shall be considered as exposed sheet metal: gutters, including hangers; downspouts; and fascias; cap, base, and eave flashings and related accessories.

2.1.2 Drainage

Do not use copper for an exposed item if drainage from that item will pass over exposed masonry, stonework or other metal surfaces. In addition to the metals listed in Table I, lead-coated copper may be used for such items.

2.1.3 Copper, Sheet and Strip

ASTM B 370, cold-rolled temper, H 00 (standard).

2.1.4 Lead Sheet

Minimum weight 4 pounds per square foot.

2.1.5 Stainless Steel

ASTM A 167, Type 302 or 304, 2D Finish, fully annealed, dead-soft temper.

2.1.6 Aluminum Alloy Sheet and Plate

ASTM B 209, color form alloy, and temper appropriate for use.

2.1.6.1 Alclad

When fabricated of aluminum, the following items shall be fabricated of Alclad 3003, Alclad 3004, Alclad 3005, clad on both sides unless otherwise indicated.

a. Gutters, downspouts, and hangers

b. Fascias

c. Flashing

2.1.6.2 Finish

Exposed exterior sheet metal items of aluminum shall have a baked-on, factory-applied color coating of polyvinylidene fluoride (PVF2) or other equivalent fluorocarbon coating applied after metal substrates have been cleaned and pretreated. Finish coating dry-film thickness shall be 0.8 to 1.3 mils, and color shall be as indicated on drawings.

2.1.7 Aluminum Alloy, Extruded Bars, Rods, Shapes, and Tubes

ASTM B 221.

2.1.8 Solder

ASTM B 32, 95-5 tin-antimony.

2.1.9 Building Paper

ASTM D 226 Type I .

2.1.10 Fasteners

Use the same metal or a metal compatible with the item fastened. Use stainless steel fasteners to fasten dissimilar materials.

2.1.11 Louver Screen

Type I commercial bronze or Type III aluminum alloy bird screen conforming to ISWA IWS 089.

PART 3 EXECUTION

3.1 INSTALLATION

3.1.1 Workmanship

Make lines, arrises, and angles sharp and true. Free exposed surfaces from visible wave, warp, and buckle, and tool marks. Fold back exposed edges neatly to form a 1/2 inch hem on the concealed side. Make sheet metal exposed to the weather watertight with provisions for expansion and contraction.

Make surfaces to receive sheet metal plumb and true, clean, even, smooth, dry, and free of defects and projections which might affect the application. For installation of items not shown in detail or not covered by specifications conform to the applicable requirements of SMACNA Arch. Manual, Architectural Sheet Metal Manual. Provide sheet metal flashing in the angles formed where roof decks abut walls, curbs, ventilators, pipes, or other vertical surfaces and wherever indicated and necessary to make the work watertight. Join sheet metal items together as shown in Table II.

3.1.2 Nailing

Confine nailing of sheet metal generally to sheet metal having a maximum width of 18 inches. Confine nailing of flashing to one edge only. Space nails evenly not over 3 inches on centers and approximately 1/2 inch from edge unless otherwise specified or indicated. Face nailing will not be permitted. Where sheet metal is applied to other than wood surfaces, include in shop drawings, the locations for sleepers and nailing strips required to secure the work. Sleepers and nailing strips are specified in Section 06100A, "Rough Carpentry."

3.1.3 Cleats

Provide cleats for sheet metal 18 inches and over in width. Space cleats evenly not over 12 inches on centers unless otherwise specified or indicated. Unless otherwise specified, cleats shall be not less than 2 inches wide by 3 inches long and of the same material and thickness as the sheet metal being installed. Secure one end of the cleat with two nails and the cleat folded back over the nailheads. Lock the other end into the seam. Where the fastening is to be made to concrete or masonry, screws shall be used and shall be driven in expansion shields set in concrete or

masonry. Pretin cleats for soldered seams.

3.1.4 Bolts, Rivets, and Screws

Install bolts, rivets, and screws where indicated or required. Provide compatible washers where required to protect surface of sheet metal and to provide a watertight connection. Joints in aluminum sheets 0.040 inch or less in thickness shall be mechanically made.

3.1.5 Seams

Straight and uniform in width and height with no solder showing on the face.

3.1.5.1 Flat-lock Seams

Finish not less than 3/4 inch wide.

3.1.5.2 Lap Seams

Finish soldered seams not less than one inch wide. Overlap seams not soldered, not less than 3 inches.

3.1.6 Soldering

Where soldering is specified, it shall apply to copper, terne-coated stainless steel, zinc-coated steel, and stainless steel items. Edges of sheet metal shall be pretinned before soldering is begun. Seal the joints in aluminum sheets of 0.040 inch or less in thickness with specified sealants. Do not solder aluminum.

3.1.6.1 Edges

Scrape or wire-brush the edges of lead-coated material to be soldered to produce a bright surface. Flux brush the seams in before soldering. Treat with soldering acid flux the edges of stainless steel to be pretinned. Seal the joints in aluminum sheets of 0.040 inch or less in thickness with specified sealants. Do not solder aluminum.

3.1.7 Welding and Mechanical Fastening

Use welding for aluminum of thickness greater than 0.040 inch. Aluminum 0.040 inch or less in thickness shall be butted and the space backed with formed flashing plate; or lock joined, mechanically fastened, and filled with sealant as recommended by the aluminum manufacturer.

3.1.7.1 Welding of Aluminum

Use welding of the inert gas, shield-arc type. For procedures, appearance and quality of welds, and the methods used in correcting welding work, conform to AWS D1.2.

3.1.7.2 Mechanical Fastening of Aluminum

Use No. 12, aluminum alloy, sheet metal screws or other suitable aluminum alloy or stainless steel fasteners. Drive fasteners in holes made with a No. 26 drill in securing side laps, end laps, and flashings. Space fasteners 12 inches maximum on centers. Where end lap fasteners are required to improve closure, locate the end lap fasteners not more than 2 inches from the end of the overlapping sheet.

3.1.8 Protection from Contact with Dissimilar Materials

3.1.8.1 Copper or Copper-bearing Alloys

Paint with heavy-bodied bituminous paint surfaces in contact with dissimilar metal, or separate the surfaces by means of moistureproof building felts.

3.1.8.2 Aluminum

Aluminum surfaces shall not directly contact other metals except stainless steel, zinc, or zinc coating. Where aluminum contacts another metal, paint the dissimilar metal with a primer followed by two coats of aluminum paint. Where drainage from a dissimilar metal passes over aluminum, paint the dissimilar metal with a non-lead pigmented paint.

3.1.8.3 Metal Surfaces

Paint surfaces in contact with mortar, concrete, or other masonry materials with alkali-resistant coatings such as heavy-bodied bituminous paint.

3.1.8.4 Wood or Other Absorptive Materials

Paint surfaces that may become repeatedly wet and in contact with metal with two coats of aluminum paint or a coat of heavy-bodied bituminous paint.

3.1.9 Expansion and Contraction

Provide expansion and contraction joints at not more than 32 foot intervals for aluminum and at not more than 40 foot intervals for other metals. Where the distance between the last expansion joint and the end of the continuous run is more than half the required interval, an additional joint shall be provided. Space joints evenly. Join extruded aluminum gravel stops and fascias by expansion and contraction joints spaced not more than 12 feet apart.

3.1.10 Fascias

Prefabricate in the shapes and sizes indicated and in lengths not less than 8 feet. Extend flange at least 4 inches onto roofing. Provide prefabricated, mitered corners internal and external corners. Install fascias after all plies of the roofing membrane have been applied, but before the flood coat of bitumen is applied. Prime roof flange of fascias on both sides with an asphalt primer. Nail flange securely to wood nailer with large-head, barbed-shank roofing nails 1.5 inches long spaced not more than 3 inches on centers, in two staggered rows.

3.1.10.1 Edge Strip

Hook the lower edge of fascias at least 3/4 inch over a continuous strip of the same material bent outward at an angle not more than 45 degrees to form a drip. Nail hook strip to a wood nailer at 6 inches maximum on centers. Where fastening is made to concrete or masonry, use screws spaced 12 inches on centers driven in expansion shields set in the concrete or masonry. Where horizontal wood nailers are slotted to provide for insulation venting, install strips to prevent obstruction of vent slots. Where necessary, install strips over 1/16 inch thick compatible spacer or washers.

3.1.10.2 Joints

Leave open the section ends of gravel stops and fascias 1/4 inch and backed with a formed flashing plate, mechanically fastened in place and lapping each section end a minimum of 4 inches set laps in plastic cement. Face nailing will not be permitted. Install prefabricated aluminum gravel stops and fascias in accordance with the manufacturer's printed instructions and details.

3.1.11 Metal Drip Edge

Provide a metal drip, designed to allow water run-off to drip free of underlying construction, at eaves and rakes prior to the application of roofing shingles. Apply directly on the wood deck at the eaves and over the underlay along the rakes. Extend back from the edge of the deck not more than 3 inches and secure with compatible nails spaced not more than 10 inches on center along upper edge.

3.1.12 Gutters

The hung type of shape indicated and supported on underside by brackets that permit free thermal movement of the gutter. Provide gutters in sizes indicated complete with mitered corners, end caps, outlets, brackets, and other accessories necessary for installation. Bead with hemmed edge or reinforce the outer edge of gutter with a stiffening bar not less than 3/4 by 3/16 inch of material compatible with gutter. Fabricate gutters in sections not less than 8 feet. Lap the sections a minimum of one inch in the direction of flow or provide with concealed splice plate 6 inches minimum. Join the gutters, other than aluminum, by riveted and soldered joints. Aluminum gutters shall be joined with riveted sealed joints. Provide expansion-type slip joints midway between outlets. Install gutters below slope line of the roof so that snow and ice can slide clear. Support gutters on adjustable hangers spaced not more than 30 inches on center by continuous cleats and or by cleats spaced not less than 36 inches apart. Adjust gutters to slope uniformly to outlets, with high points occurring midway between outlets. Fabricate hangers and fastenings from metals compatible with the gutters.

3.1.13 Downspouts

Supports for downspouts shall be spaced according to the manufacturer's recommendation for the steel substrate. Provide complete including elbows and offsets. Provide downspouts in approximately 10 foot lengths. Provide end joints to telescope not less than 1/2 inch and lock longitudinal joints. Provide gutter outlets with wire ball strainers for each outlet. Provide strainers to fit tightly into outlets and be of the same material used for gutters. Keep downspouts not less than one inch away from walls. Fasten to the walls at top, bottom, and at an intermediate point not to exceed 5 feet on centers with leader straps or concealed rack-and-pin type fasteners. Form straps and fasteners of metal compatible with the downspouts.

3.1.13.1 Terminations

Neatly fit into the drainage connection the downspouts terminating in drainage lines and fill the joints with a portland cement mortar cap sloped away from the downspout. Provide downspouts terminating in splash blocks with elbow-type fittings.

3.1.14 Expansion Joints

Expansion joints in continuous sheet metal shall be provided at 40 foot intervals for copper and stainless steel and at 32 foot intervals for aluminum, fascias which shall have expansion joints at not more than 12 foot spacing. Joints shall be evenly spaced. An additional joint shall be provided where the distance between the last expansion joint and the end of the continuous run is more than half the required interval spacing. Conform to the requirements of Table I.

3.1.15 Copings

Provide coping using copper sheets 8 or 10 feet long joined by a 3/4 inch locked and soldered seam. Terminate outer edges in edge strips. Install with sealed cover plate joints as indicated.

3.1.16 Installation of Louvers

Louvers shall be rigidly attached to the supporting construction. The installation shall be rain-tight. Louver screen shall be installed as indicated.

3.2 PAINTING

Field-paint sheet metal for separation of dissimilar materials. Finish painting is specified in Section 09900, "Paints and Coatings."

3.3 CLEANING

Clean exposed sheet metal work at completion of installation. Remove grease and oil films, handling marks, contamination from steel wool, fittings and drilling debris, and scrub-clean. Free the exposed metal surfaces of dents, creases, waves, scratch marks, and solder or weld marks.

3.4 REPAIRS TO FINISH

Scratches, abrasions, and minor surface defects of finish may be repaired in accordance with the manufacturer's printed instructions and as approved. Repair damaged surfaces caused by scratches, blemishes, and variations of color and surface texture. Replace items which cannot be repaired.

3.5 FIELD QUALITY CONTROL

The Contractor shall establish and maintain a quality control procedure for sheet metal used in conjunction with roofing to assure compliance of the installed sheet metalwork with the contract requirements. Work not in compliance with the contract shall be promptly removed and replaced or corrected. Quality control shall include, but not be limited to, the following:

a. Observation of environmental conditions; number and skill level of sheet metal workers; condition of substrate.

b. Verification that specified material is provided and installed.

c. Inspection of sheet metalwork, for proper size(s) and thickness(es), fastening and joining, and proper installation.

The actual quality control observations and inspections shall be documented

and a copy of the documentation furnished to the Contracting Officer at the end of each day.

3.5.1 Procedure

Submit for approval prior to start of roofing work. Include a checklist of points to be observed. Document the actual quality control observations and inspections. Furnish a copy of the documentation to the Contracting Officer at the end of each day.

TABLE I. SHEET METAL WEIGHTS, THICKNESSES, AND GAGES

| Sheet Metal Items | Copper, Ounces Per Square Foot | Aluminum, Inch | Stainless Steel, Inch |
|---|---|---|---|
| Building Expansion Joints Cover..... | 16 | .032 | .015 |
| Downspouts and leaders..... | 16 | .032 | .015 |
| Downspout clips and anchors..... | - | .040 clip | - |
| | - | .125 anchor | - |
| Downspout straps, 2-inch..... | 48(a) | .060 | .050 |
| Conductor heads..... | 16 | .032 | .015 |
| Scupper lining..... | 20 | .032 | .015 |
| Strainers, wire diameter or gage.... | No. 9 gage | .144 diameter | .109 diameter |
| Flashings: | | | |
| Cap (Counter-flashing) | 16 | .032 | .015 |
| Fascias: | | | |
| Extrusions..... | - | .075 | - |
| Sheets, smooth..... | 20 | .050 | .018 |
| Edge strip..... | 24 | .050 | .025 |
| Gutters: | | | |
| Gutter section..... | 16 | .032 | .015 |
| Continuous cleat..... | 16 | .032 | .015 |
| Hangers, dimensions..... | 1 inch x 1/8 inch (a) | 1 inch x .080 inch (c) | 1 inch x .037 inch |
| Joint Cover plates... (See Table II) | 16 | .032 | .015 |

(a) Brass.

TABLE I. SHEET METAL WEIGHTS, THICKNESSES, AND GAGES

| Sheet Metal Items | Copper, Ounces Per Square Foot | Aluminum, Inch | Stainless Steel, Inch |
|---|---|---|---|

(b) May be lead weighing 4 pounds per square foot.

(c) May be polyvinyl chloride.

(d) 2.5 pound minimum lead sleeve with 4 inch flange. Where lead sleeve is impractical, refer to paragraph entitled "Single Pipe Vents" for optional material.

TABLE II. SHEET METAL JOINTS

| Item Designation | TYPE OF JOINT: Copper, and Stainless Steel | Aluminum | Remarks |
|---|---|---|---|
| Joint cap for building expansion seam, cleated joint at roof | 1.25 inch single lock, standing seam, cleated | 1.25 inch single lock, standing | - - - |
| Flashings | | | |
| Base | One inch 3 inch lap for expansion joint | One inch flat locked, soldered; sealed; 3 inch lap for expansion joint | Aluminum producer's recommended hard setting sealant for locked aluminum joints. Fill each metal expansion joint with a joint sealing compound compound. See Section 07900A, "Joint Sealants." |
| Cap-in reglet | 3 inch lap | 3 inch lap | Seal groove with joint sealing compound. See Section 07900A, "Joint Sealants." |
| Reglets | Butt joint | - - - | Seal reglet groove with joint sealing |

TABLE II. SHEET METAL JOINTS

| Item Designation | TYPE OF JOINT: Copper, and Stainless Steel | Aluminum | Remarks |
|---|---|---|---|
| | | | compound. See Section 07900A, "Joint Sealants." |
| Eave | One inch flat locked, cleated One inch loose locked, expansion joint cleated | One inch flat locked, locked, cleated one inch loose locked, sealed expansion joints, cleated | Same as base flashing. |
| Edge strip | Butt | Butt | - - - |
| Sheet, smooth | Butt with 1/4 inch space | Butt with 1/4 inch space | Use sheet flashing backup plate. |
| Gutters | 1.5 inch lap, riveted and soldered | One inch flat locked, riveted, and sealed | Aluminum producers recommended hard setting sealant for locked aluminum joints. |

(a) Elastomeric flashing shall have 3 inch lap with manufacturer's recommended sealant.

-- End of Section --

SECTION TABLE OF CONTENTS

DIVISION 07 - THERMAL AND MOISTURE PROTECTION

SECTION 07840

FIRESTOPPING

**04/03**

PART 1 GENERAL

1.1 REFERENCES
1.2 SUBMITTALS
1.3 GENERAL REQUIREMENTS
1.4 DELIVERY AND STORAGE
1.5 INSTALLER QUALIFICATIONS
1.6 COORDINATION

PART 2 PRODUCTS

2.1 FIRESTOPPING MATERIALS
2.1.1 Fire Hazard Classification
2.1.2 Toxicity
2.1.3 Fire Resistance Rating
2.1.3.1 Through-Penetrations
2.1.3.2 Construction Joints and Gaps

PART 3 EXECUTION

3.1 PREPARATION
3.2 INSTALLATION
3.2.1 Insulated Pipes and Ducts
3.2.2 Fire Dampers
3.3 INSPECTION

-- End of Section Table of Contents --

SECTION 07840

FIRESTOPPING
**04/03**

PART 1 GENERAL

1.1 REFERENCES

The publications listed below form a part of this specification to the extent referenced. The publications are referred to within the text by basic designation only.

ASTM INTERNATIONAL (ASTM)

| | |
|---|---|
| ASTM E 84 | (2001) Surface Burning Characteristics of Building Materials |
| ASTM E 119 | (2000a) Fire Tests of Building Construction and Materials |
| ASTM E 814 | (2002) Fire Tests of Through-Penetration Fire Stops |
| ASTM E 1399 | (1997; R 2000) Cyclic Movement and Measuring the Minimum and Maximum Joint Widths of Architectural Joint Systems |
| ASTM E 1966 | (2001) Fire-Resistive Joint Systems |

UNDERWRITERS LABORATORIES (UL)

| | |
|---|---|
| UL 723 | (1996; Rev thru Sep 2001) Test for Surface Burning Characteristics of Building Materials |
| UL 1479 | (1994; Rev thru Aug 2000) Fire Tests of Through-Penetration Firestops |
| UL 2079 | (1998) Tests for Fire Resistance of Building Joint Systems |
| UL Fire Resist Dir | (2001) Fire Resistance Directory (2 Vol.) |

1.2 SUBMITTALS

Government approval is required for submittals with a "G" designation; submittals not having a "G" designation are for information only or as otherwise designated. When used, a designation following the "G" designation identifies the office that will review the submittal for the Government. The following shall be submitted in accordance with Section 01330 SUBMITTAL PROCEDURES:

SD-02 Shop Drawings

Firestopping Materials;.

Detail drawings including manufacturer's descriptive data, typical details conforming to UL Fire Resist Dir or other details certified by another nationally recognized testing laboratory, installation instructions or UL listing details for a firestopping assembly in lieu of fire-test data or report. For those firestop applications for which no UL tested system is available through a manufacturer, a manufacturer's engineering judgement, derived from similar UL system designs or other tests, shall be submitted for review and approval prior to installation. Submittal shall indicate the firestopping material to be provided for each type of application. When more than 5 penetrations or construction joints are to receive firestopping, drawings shall indicate location and type of application.

SD-07 Certificates

Firestopping Materials;.

Certificates attesting that firestopping material complies with the specified requirements. In lieu of certificates, drawings showing UL classified materials as part of a tested assembly may be provided. Drawings showing evidence of testing by an alternate nationally recognized independent laboratory may be substituted.

Installer Qualifications;.

Documentation of training and experience.

Inspection;.

Manufacturer's representative certification stating that firestopping work has been inspected and found to be applied according to the manufacturer's recommendations and the specified requirements.

## 1.3 GENERAL REQUIREMENTS

Firestopping shall consist of furnishing and installing tested and listed firestop systems, combination of materials, or devices to form an effective barrier against the spread of flame, smoke and gases, and maintain the integrity of fire resistance rated walls, partitions, floors, and ceiling-floor assemblies, including through-penetrations and construction joints and gaps. Through-penetrations include the annular space around pipes, tubes, conduit, wires, cables and vents. Construction joints include those used to accommodate expansion, contraction, wind, or seismic movement; firestopping material shall not interfere with the required movement of the joint. Gaps requiring firestopping include gaps between the curtain wall and the floor slab and between the top of the fire-rated walls and the roof or floor deck above.

## 1.4 DELIVERY AND STORAGE

Materials shall be delivered in the original unopened packages or containers showing name of the manufacturer and the brand name. Materials shall be stored off the ground and shall be protected from damage and exposure to elements. Damaged or deteriorated materials shall be removed from the site.

## 1.5 INSTALLER QUALIFICATIONS

The Contractor shall engage an experienced Installer who is certified, licensed, or otherwise qualified by the firestopping manufacturer as having the necessary staff, training, and a minimum of 3 years experience in the installation of manufacturer's products per specified requirements. A manufacturer's willingness to sell its firestopping products to the Contractor or to an installer engaged by the Contractor does not in itself confer qualification on the buyer. The Installer shall have been trained by a direct representative of the manufacturer (not distributor or agent) in the proper selection and installation procedures.

## 1.6 COORDINATION

The specified work shall be coordinated with other trades. Firestopping materials, at penetrations of pipes and ducts, shall be applied prior to insulating, unless insulation meets requirements specified for firestopping. Firestopping materials at building joints and construction gaps shall be applied prior to completion of enclosing walls or assemblies. Cast-in-place firestop devices shall be located and installed in place before concrete placement. Pipe, conduit or cable bundles shall be installed through cast-in-place device after concrete placement but before area is concealed or made inaccessible.

# PART 2 PRODUCTS

## 2.1 FIRESTOPPING MATERIALS

Firestopping materials shall consist of commercially manufactured, asbestos-freeproducts, complying with the following minimum requirements:

### 2.1.1 Fire Hazard Classification

Material shall have a flame spread of 25 or less, and a smoke developed rating of 50 or less, when tested in accordance with ASTM E 84 or UL 723. Material shall be an approved firestopping material as listed in UL Fire Resist Dir or by a nationally recognized testing laboratory.

### 2.1.2 Toxicity

Material shall be nontoxic to humans at all stages of application or during fire conditions.

### 2.1.3 Fire Resistance Rating

Firestopping will not be required to have a greater fire resistance rating than that of the assembly in which it is being placed.

#### 2.1.3.1 Through-Penetrations

Firestopping materials for through-penetrations, as described in paragraph GENERAL REQUIREMENTS, shall provide "F" and "T" fire resistance ratings in accordance with ASTM E 814 or UL 1479. Fire resistance ratings shall be as follows:

a. Penetrations of Fire Resistance Rated Walls and Partitions: F Rating = Rating of wall or partition being penetrated.

b. Penetrations of Fire Resistance Rated Floors, Floor-Ceiling

Assemblies and the ceiling membrane of Roof-Ceiling Assemblies: F Rating = Rating of Roof-Ceiling Assemblies being penetrated .

2.1.3.2 Construction Joints and Gaps

Fire resistance ratings of construction joints, as described in paragraph GENERAL REQUIREMENTS, and gaps such as those between roof decks and walls shall be the same as the construction in which they occur. Construction joints and gaps shall be provided with firestopping materials and systems that have been tested per ASTM E 119, ASTM E 1966 or UL 2079 to meet the required fire resistance rating. Systems installed at construction joints shall meet the cycling requirements of ASTM E 1399 or UL 2079.

PART 3 EXECUTION

3.1 PREPARATION

Areas to receive firestopping shall be free of dirt, grease, oil, or loose materials which may affect the fitting or fire resistance of the firestopping system. For cast-in-place firestop devices, formwork or metal deck to receive device prior to concrete placement shall be sound and capable of supporting device.

3.2 INSTALLATION

Firestopping material shall completely fill void spaces regardless of geometric configuration, subject to tolerance established by the manufacturer. Firestopping systems for filling floor voids 4 inches or more in any direction shall be capable of supporting the same load as the floor is designed to support or shall be protected by a permanent barrier to prevent loading or traffic in the firestopped area. Firestopping shall be installed in accordance with manufacturer's written instructions. Tested and listed firestop systems shall be provided in the following locations, except in floor slabs on grade:

a. Penetrations of duct, conduit, tubing, cable and pipe through floors and through fire-resistance rated walls, partitions, and ceiling-floor assemblies.

Gaps at perimeter of fire-resistance rated walls and partitions, such as between the top of the walls and the bottom of roof decks.

c. Construction joints in floors and fire rated walls and partitions.

d. Other locations where required to maintain fire resistance rating of the construction.

3.2.1 Insulated Pipes and Ducts

Thermal insulation shall be cut and removed where pipes or ducts pass through firestopping, unless insulation meets requirements specified for firestopping. Thermal insulation shall be replaced with a material having equal thermal insulating and firestopping characteristics.

3.2.2 Fire Dampers

Fire dampers shall be installed and firestopped in accordance with Section 15895 AIR SUPPLY, DISTRIBUTION, VENTILATION, AND EXHAUST SYSTEM.

3.3 INSPECTION

Firestopped areas shall not be covered or enclosed until inspection is complete and approved. A manufacturer's representative shall inspect the applications initially to ensure adequate preparations (clean surfaces suitable for application, etc.) and periodically during the work to assure that the completed work has been accomplished according to the manufacturer's written instructions and the specified requirements.

-- End of Section --

SECTION TABLE OF CONTENTS

DIVISION 07 - THERMAL AND MOISTURE PROTECTION

SECTION 07900A

JOINT SEALING

06/97

PART 1 GENERAL

1.1 REFERENCES
1.2 SUBMITTALS
1.3 ENVIRONMENTAL REQUIREMENTS
1.4 DELIVERY AND STORAGE

PART 2 PRODUCTS

2.1 BACKING
2.1.1 Rubber
2.1.2 Synthetic Rubber
2.2 BOND-BREAKER
2.3 PRIMER
2.4 CAULKING
2.5 SEALANT
2.5.1 LATEX
2.5.2 ELASTOMERIC
2.6 SOLVENTS AND CLEANING AGENTS

PART 3 EXECUTION

3.1 GENERAL
3.1.1 Surface Preparation
3.1.2 Concrete and Masonry Surfaces
3.1.3 Steel Surfaces
3.1.4 Aluminum Surfaces
3.2 APPLICATION
3.2.1 Masking Tape
3.2.2 Backing
3.2.3 Bond-Breaker
3.2.4 Primer
3.2.5 Sealant
3.3 CLEANING

-- End of Section Table of Contents --

SECTION 07900A

JOINT SEALING
06/97

PART 1 GENERAL

1.1 REFERENCES

The publications listed below form a part of this specification to the extent referenced. The publications are referred to in the text by basic designation only.

AMERICAN SOCIETY FOR TESTING AND MATERIALS (ASTM)

| | |
|---|---|
| ASTM C 509 | (1994) Elastomeric Cellular Preformed Gasket and Sealing Material |
| ASTM C 570 | (1995) Oil- and Resin-Base Caulking Compound for Building Construction |
| ASTM C 834 | (1995) Latex Sealants |
| ASTM C 920 | (2002) Elastomeric Joint Sealants |
| ASTM D 1056 | (2000) Flexible Cellular Materials - Sponge or Expanded Rubber |

1.2 SUBMITTALS

Government approval is required for submittals with a "G" designation; submittals not having a "G" designation are for information only. When used, a designation following the "G" designation identifies the office that will review the submittal for the Government. The following shall be submitted in accordance with Section 01330 SUBMITTAL PROCEDURES:

SD-03 Product Data

Backing; G, AO.

Bond-Breaker; G, AO.

Sealant; G, AO.

Manufacturer's descriptive data including storage requirements, shelf life, curing time, instructions for mixing and application, and primer data (if required). A copy of the Material Safety Data Sheet shall be provided for each solvent, primer or sealant material.

SD-07 Certificates

Sealant.

Certificates of compliance stating that the materials conform to the specified requirements.

1.3 ENVIRONMENTAL REQUIREMENTS

The ambient temperature shall be within the limits of 40 to 90 degrees F when the sealants are applied.

1.4 DELIVERY AND STORAGE

Materials shall be delivered to the job in the manufacturer's original unopened containers. The container label or accompanying data sheet shall include the following information as applicable: manufacturer, name of material, formula or specification number, lot number, color, date of manufacture, mixing instructions, shelf life, and curing time at the standard conditions for laboratory tests. Materials shall be handled and stored to prevent inclusion of foreign materials. Materials shall be stored at temperatures between40 and 90 degrees F unless otherwise specified by the manufacturer.

PART 2 PRODUCTS

2.1 BACKING

Backing shall be 25 to 33 percent oversize for closed cell and 40 to 50 percent oversize for open cell material, unless otherwise indicated.

2.1.1 Rubber

Cellular rubber sponge backing shall be ASTM D 1056, Type 1, open cell, Class B , Grade 0, round cross section.

2.1.2 Synthetic Rubber

Synthetic rubber backing shall be ASTM C 509, Option I , Type I preformed rods or tubes.

2.2 BOND-BREAKER

Bond-breaker shall be as recommended by the sealant manufacturer to prevent adhesion of the sealant to backing or to bottom of the joint.

2.3 PRIMER

Primer shall be non-staining type as recommended by sealant manufacturer for the application.

2.4 CAULKING

Oil- and resin-based caulking shall be ASTM C 570, Type 1.

2.5 SEALANT

2.5.1 LATEX

Latex Sealant shall be ASTM C 834.

2.5.2 ELASTOMERIC

Elastomeric sealants shall conform to ASTM C 920 and the following:

Polyurethane sealant: Grade NS , Class 25 , Use NT .

b. Silicone sealant: Type S , Grade NS , Class 25 , Use NT.

2.6 SOLVENTS AND CLEANING AGENTS

Solvents, cleaning agents, and accessory materials shall be provided as recommended by the manufacturer.

PART 3 EXECUTION

3.1 GENERAL

3.1.1 Surface Preparation

The surfaces of joints to receive sealant or caulk shall be free of all frost, condensation and moisture. Oil, grease, dirt, chalk, particles of mortar, dust, loose rust, loose mill scale, and other foreign substances shall be removed from surfaces of joints to be in contact with the sealant. Oil and grease shall be removed with solvent and surfaces shall be wiped dry with clean cloths. For surface types not listed below, the sealant manufacturer shall be contacted for specific recommendations.

3.1.2 Concrete and Masonry Surfaces

Where surfaces have been treated with curing compounds, oil, or other such materials, the materials shall be removed by sandblasting or wire brushing. Laitance, efflorescence and loose mortar shall be removed from the joint cavity.

3.1.3 Steel Surfaces

Steel surfaces to be in contact with sealant shall be sandblasted or, if sandblasting would not be practical or would damage adjacent finish work, the metal shall be scraped and wire brushed to remove loose mill scale. Protective coatings on steel surfaces shall be removed by sandblasting or by a solvent that leaves no residue.

3.1.4 Aluminum Surfaces

Aluminum surfaces to be in contact with sealants shall be cleaned of temporary protective coatings. When masking tape is used for a protective cover, the tape and any residual adhesive shall be removed just prior to applying the sealant. Solvents used to remove protective coating shall be as recommended by the manufacturer of the aluminum work and shall be non-staining.

3.2 APPLICATION

3.2.1 Masking Tape

Masking tape shall be placed on the finish surface on one or both sides of a joint cavity to protect adjacent finish surfaces from primer or sealant smears. Masking tape shall be removed within 10 minutes after joint has been filled and tooled.

3.2.2 Backing

Backing shall be installed to provide the indicated sealant depth. The installation tool shall be shaped to avoid puncturing the backing.

3.2.3 Bond-Breaker

Bond-breaker shall be applied to fully cover the bottom of the joint without contaminating the sides where sealant adhesion is required.

3.2.4 Primer

Primer shall be used on concrete masonry units, wood, or other porous surfaces in accordance with instructions furnished with the sealant. Primer shall be applied to the joint surfaces to be sealed. Surfaces adjacent to joints shall not be primed.

3.2.5 Sealant

Sealant shall be used before expiration of shelf life. Multi-component sealants shall be mixed according to manufacturer's printed instructions. Sealant in guns shall be applied with a nozzle of proper size to fit the width of joint. Joints shall be sealed as detailed in the drawings. Sealant shall be forced into joints with sufficient pressure to expel air and fill the groove solidly. Sealant shall be installed to the indicated depth without displacing the backing. Unless otherwise indicated, specified, or recommended by the manufacturer, the installed sealant shall be dry tooled to produce a uniformly smooth surface free of wrinkles and to ensure full adhesion to the sides of the joint; the use of solvents, soapy water, etc., will not be allowed. Sealants shall be installed free of air pockets, foreign embedded matter, ridges and sags. Sealer shall be applied over the sealant when and as specified by the sealant manufacturer.

3.3 CLEANING

The surfaces adjoining the sealed joints shall be cleaned of smears and other soiling resulting from the sealant application as work progresses.

-- End of Section --

SECTION TABLE OF CONTENTS

DIVISION 08 - DOORS AND WINDOWS

SECTION 08110

STEEL DOORS AND FRAMES

**05/01**

PART 1 GENERAL

1.1 REFERENCES
1.2 SUBMITTALS
1.3 DELIVERY, STORAGE, AND HANDLING

PART 2 PRODUCTS

2.1 STANDARD STEEL DOORS
2.1.1 Classification - Level, Performance, Model
2.1.1.1 Extra Heavy Duty Doors
2.2 CUSTOM HOLLOW METAL DOORS
2.3 ACCESSORIES
2.3.1 Moldings
2.4 STANDARD STEEL FRAMES
2.4.1 Welded Frames
2.4.2 Anchors
2.4.2.1 Wall Anchors
2.4.2.2 Floor Anchors
2.5 HARDWARE PREPARATION
2.6 FINISHES
2.6.1 Factory-Primed Finish
2.6.2 Hot-Dip Zinc-Coated and Factory-Primed Finish
2.6.3 Electrolytic Zinc-Coated Anchors and Accessories
2.7 FABRICATION AND WORKMANSHIP
2.7.1 Grouted Frames

PART 3 EXECUTION

3.1 INSTALLATION
3.1.1 Frames
3.1.2 Doors
3.2 PROTECTION
3.3 CLEANING

-- End of Section Table of Contents --

SECTION 08110

STEEL DOORS AND FRAMES

**05/01**

PART 1 GENERAL

1.1 REFERENCES

The publications listed below form a part of this specification to the extent referenced. The publications are referred to in the text by the basic designation only.

AMERICAN NATIONAL STANDARDS INSTITUTE (ANSI)

| | |
|---|---|
| ANSI A250.6 | (1997) Hardware on Standard Steel Doors (Reinforcement - Application) |
| ANSI A250.8 | (1998) SDI-100 Recommended Specifications for Standard Steel Doors and Frames |

AMERICAN SOCIETY FOR TESTING AND MATERIALS (ASTM)

| | |
|---|---|
| ASTM A 591 | (1998) Steel Sheet, Electrolytic Zinc-Coated, for Light Coating Mass Applications |
| ASTM A 653/A 653M | (2000) Steel Sheet, Zinc-Coated (Galvanized) or Zinc-Iron Alloy-Coated (Galvannealed) by the Hot-Dip Process |
| ASTM A 924/A 924M | (1999) General Requirements for Steel Sheet, Metallic-Coated by the Hot-Dip Process |

DOOR AND HARDWARE INSTITUTE (DHI)

| | |
|---|---|
| BHMA A115 | (1991) Steel Door Preparation Standards (Consisting of A115.1 through A115.6 and A115.12 through A115.18) |

HOLLOW METAL MANUFACTURERS ASSOCIATION (HMMA)

| | |
|---|---|
| NAAMM HMMA HMM | (1992) Hollow Metal Manual |

STEEL DOOR INSTITUTE (SDOI)

| | |
|---|---|
| SDI 105 | (1998) Recommended Erection Instructions for Steel Frames |
| SDI 111-F | Recommended Existing Wall Anchors for Standard Steel Doors and Frames |

## 1.2 SUBMITTALS

Submit the following in accordance with Section 01330, "Submittal Procedures."

SD-02 Shop Drawings

Doors; G-AE

Frames; G-AE

Accessories

Show elevations, construction details, metal gages, hardware provisions, method of glazing, and installation details.

Schedule of doors; G-AE

Schedule of frames; G-AE

Submit door and frame locations.

SD-03 Product Data

Doors; G-AE

Frames; G-AE

Accessories

Submit manufacturer's descriptive literature for doors, frames, and accessories. Include data and details on door construction, panel (internal) reinforcement, insulation, and door edge construction. When "custom hollow metal doors" are provided in lieu of "standard steel doors," provide additional details and data sufficient for comparison to ANSI A250.8 requirements.

## 1.3 DELIVERY, STORAGE, AND HANDLING

Deliver doors, frames, and accessories undamaged and with protective wrappings or packaging. Strap knock-down frames in bundles. Provide temporary steel spreaders securely fastened to the bottom of each welded frame. Store doors and frames on platforms under cover in clean, dry, ventilated, and accessible locations, with 1/4 inch airspace between doors. Remove damp or wet packaging immediately and wipe affected surfaces dry. Replace damaged materials with new.

# PART 2 PRODUCTS

## 2.1 STANDARD STEEL DOORS

ANSI A250.8, except as specified otherwise. Prepare doors to receive hardware specified in Section 08710, "Door Hardware." Undercut where indicated. Exterior doors shall have top edge closed flush and sealed to prevent water intrusion. Doors shall be 1 3/4 inches thick, unless otherwise indicated.

2.1.1 Classification - Level, Performance, Model
2.1.1.1 Extra Heavy Duty Doors

ANSI A250.8, Level 3, physical performance Level A, Model 1 with core construction as required by the manufacturer for interior doors , of size(s) and design(s) indicated. Where vertical stiffenercores are required, the space between the stiffeners shall be filled with mineral board insulation. Close tops of all exterior doors flush with an additional channel and seal to prevent wall intrusion.

2.2 CUSTOM HOLLOW METAL DOORS

Provide custom hollow metal doors where nonstandard steel doors are indicated. At the Contractor's option, custom hollow metal doors may be provided in lieu of standard steel doors. Door size(s), design, materials, construction, gages, and finish shall be as specified for standard steel doors and shall comply with the requirement of NAAMM HMMA HMM. Fill all spaces in doors with insulation. Close top and bottom edges with steel channels not lighter than 16 gage. Close tops of exterior doors flush with an additional channel and seal to prevent water intrusion. Prepare doors to receive hardware specified in Section 08710, "Door Hardware." Doors shall be 1 3/4 inches thick, unless otherwise indicated.

2.3 ACCESSORIES

2.3.1 Moldings

Provide moldings around glass of interior and exterior doors. Provide nonremovable moldings on outside of exterior doors and on corridor side of interior doors. Other moldings may be stationary or removable. Secure inside moldings to stationary moldings, or provide snap-on moldings. Muntins shall interlock at intersections and shall be fitted and welded to stationary moldings.

2.4 STANDARD STEEL FRAMES

ANSI A250.8, except as otherwise specified. Form frames to sizes and shapes indicated, with welded corners . Provide steel frames for doors, sidelights, cased openings, and interior glazed panels, unless otherwise indicated.

2.4.1 Welded Frames

Continuously weld frame faces at corner joints. Mechanically interlock or continuously weld stops and rabbets. Grind welds smooth.

2.4.2 Anchors

Provide anchors to secure the frame to adjoining construction. Provide steel anchors, zinc-coated or painted with rust-inhibitive paint, not lighter than 18 gage.

2.4.2.1 Wall Anchors

Provide at least three anchors for each jamb.

a. Masonry: Provide anchors of corrugated or perforated steel straps or 3/16 inch diameter steel wire, adjustable or T-shaped;

b. Stud partitions: Weld or otherwise securely fasten anchors to backs of frames. Design anchors to be fastened to closed steel studs with sheet metal screws, and to open steel studs by wiring or welding;

c. Completed openings: Secure frames to previously placed concrete or masonry with expansion bolts in accordance with SDI 111-F; and

2.4.2.2 Floor Anchors

Provide floor anchors drilled for 3/8 inch anchor bolts at bottom of each jamb member. Where floor fill occurs, terminate bottom of frames at the indicated finished floor levels and support by adjustable extension clips resting on and anchored to the structural slabs.

2.5 HARDWARE PREPARATION

Provide minimum hardware reinforcing gages as specified in ANSI A250.6. Drill and tap doors and frames to receive finish hardware. Prepare doors and frames for hardware in accordance with the applicable requirements of ANSI A250.8 and ANSI A250.6. For additional requirements refer to BHMA A115. Drill and tap for surface-applied hardware at the project site. Build additional reinforcing for surface-applied hardware into the door at the factory. Locate hardware in accordance with the requirements of ANSI A250.8, as applicable. Punch door frames , with the exception of frames that will have weatherstripping gasketing, to receive a minimum of two rubber or vinyl door silencers on lock side of single doors and one silencer for each leaf at heads of double doors. Set lock strikes out to provide clearance for silencers.

2.6 FINISHES

2.6.1 Factory-Primed Finish

All surfaces of doors and frames shall be thoroughly cleaned, chemically treated and factory primed with a rust inhibiting coating as specified in ANSI A250.8, , or paintable A25 galvannealed steel without primer. Where coating is removed by welding, apply touchup of factory primer.

2.6.2 Hot-Dip Zinc-Coated and Factory-Primed Finish

Fabricate exterior doors and frames from hot dipped zinc coated steel, alloyed type, that complies with ASTM A 924/A 924M and ASTM A 653/A 653M. The Coating weight shall meet or exceed the minimum requirements for coatings having 0.4 ounces per square foot, total both sides, i.e., A40. Repair damaged zinc-coated surfaces by the application of zinc dust paint. Thoroughly clean and chemically treat to insure maximum paint adhesion. Factory prime as specified in ANSI A250.8. .

2.6.3 Electrolytic Zinc-Coated Anchors and Accessories

Provide electrolytically deposited zinc-coated steel in accordance with ASTM A 591, Commercial Quality, Coating Class A. Phosphate treat and factory prime zinc-coated surfaces as specified in ANSI A250.8.

2.7 FABRICATION AND WORKMANSHIP

Finished doors and frames shall be strong and rigid, neat in appearance, and free from defects, waves, scratches, cuts, dents, ridges, holes, warp,

and buckle. Molded members shall be clean cut, straight, and true, with joints coped or mitered, well formed, and in true alignment. Dress exposed welded and soldered joints smooth. Design door frame sections for use with the wall construction indicated. Corner joints shall be well formed and in true alignment. Conceal fastenings where practicable. On wraparound frames for masonry partitions, provide a throat opening 1/8 inch larger than the actual masonry thickness. Design other frames in exposed masonry walls or partitions to allow sufficient space between the inside back of trim and masonry to receive calking compound.

2.7.1 Grouted Frames

All frames to be installed in exterior walls shall be filled with mortar or grout, fill the stops with strips of rigid insulation to keep the grout out of the stops and to facilitate installation of stop-applied head and jamb seals.

PART 3 EXECUTION

3.1 INSTALLATION

3.1.1 Frames

Set frames in accordance with SDI 105. Plumb, align, and brace securely until permanent anchors are set. Anchor bottoms of frames with expansion bolts or powder-actuated fasteners. Build in or secure wall anchors to adjoining construction. Backfill frames with mortar. When an additive is provided in the mortar, coat inside of frames with corrosion-inhibiting bituminous material. For frames in exterior walls, ensure that stops are filled with rigid insulation before grout is placed.

3.1.2 Doors

Hang doors in accordance with clearances specified in ANSI A250.8. After erection and glazing, clean and adjust hardware.

3.2 PROTECTION

Protect doors and frames from damage. Repair damaged doors and frames prior to completion and acceptance of the project or replace with new, as directed. Wire brush rusted frames until rust is removed. Clean thoroughly. Apply an all-over coat of rust-inhibitive paint of the same type used for shop coat.

3.3 CLEANING

Upon completion, clean exposed surfaces of doors and frames thoroughly. Remove mastic smears and other unsightly marks.

-- End of Section --

SECTION TABLE OF CONTENTS

DIVISION 08 - DOORS AND WINDOWS

SECTION 08331A

METAL ROLLING COUNTER DOORS

**09/98**

PART 1 GENERAL

1.1 REFERENCES
1.2 GENERAL
1.3 SUBMITTALS
1.4 DELIVERY AND STORAGE
1.5 WARRANTY

PART 2 PRODUCTS

2.1 BASIC COMPONENTS
2.1.1 Curtain
2.1.2 Jamb Guides
2.1.3 Counterbalance Shaft Assembly
2.1.4 Brackets
2.1.5 Hood
2.1.6 Locks
2.2 FIRE-RATED ROLLING COUNTER DOORS
2.3 OPERATION
2.3.1 Manual Operation
2.4 AUTOMATIC CLOSING DEVICE
2.5 FINISH

PART 3 EXECUTION

3.1 INSTALLATION
3.2 FIELD FINISHING
3.3 CLEANING
3.4 TESTS

-- End of Section Table of Contents --

SECTION 08331A

METAL ROLLING COUNTER DOORS
09/98

PART 1 GENERAL

1.1 REFERENCES

The publications listed below form a part of this specification to the extent referenced. The publications are referred to in the text by basic designation only.

AMERICAN SOCIETY FOR TESTING AND MATERIALS (ASTM)

| | |
|---|---|
| ASTM A 653/A 653M | (2000) Steel Sheet, Zinc-Coated (Galvanized) or Zinc-Iron Alloy-Coated (Galvannealed) by the Hot-Dip Process |

NATIONAL FIRE PROTECTION ASSOCIATION (NFPA)

| | |
|---|---|
| NFPA 80 | (1999) Fire Doors and Fire Windows |

1.2 GENERAL

Rolling counter doors shall be of the type, size, and design indicated on the drawings, and shall be the standard product of a manufacturer regularly engaged in the production of rolling counter doors. Each door shall be provided with a permanent label showing the manufacturer's name and address and the model number of the door.

1.3 SUBMITTALS

Government approval is required for submittals with a "G" designation; submittals not having a "G" designation are for information only. When used, a designation following the "G" designation identifies the office that will review the submittal for the Government. The following shall be submitted in accordance with Section 01330 SUBMITTAL PROCEDURES:

SD-02 Shop Drawings

Approved Detail Drawings; G-ED

Drawings showing elevations of each door type, details of anchorage, details of construction, location and description of hardware, shape and thickness of materials, details of joints and connections, and details of guides and fittings. A schedule showing the location of each counter door shall be included with the drawings.

SD-03 Product Data

Fire-Rated Rolling Counter Doors; G-ED

Manufacturer's descriptive data and catalog cuts.

Installation; G-ED
Cleaning; G-ED

Manufacturer's preprinted installation and cleaning instructions.

SD-10 Operation and Maintenance Data

Operation; G-ED

Six complete copies of maintenance instructions listing routine maintenance procedures, possible breakdowns and repairs, troubleshooting guides, and simplified diagrams for the equipment as installed. Spare parts data for each different item of material and equipment specified shall be supplied not later than 30 days prior to the date of beneficial occupancy. The data shall include a complete list of parts and supplies, with current unit prices and source of supply, and a list of the parts recommended by the manufacturer to be replaced after 1 year and 3 years of service.

## 1.4 DELIVERY AND STORAGE

Rolling counter doors shall be delivered to the jobsite wrapped in a protective covering with the brands and names clearly marked thereon. Rolling counter doors shall be stored in accordance with the manufacturer's instructions in a dry location that is adequately ventilated and free from dust, water, or other contaminants, and in a manner that permits easy access for inspecting and handling. Doors shall be handled carefully to prevent damage. Damaged items that cannot be restored to like-new condition shall be replaced.

## 1.5 WARRANTY

Manufacturer's standard performance guarantees or warranties that extend beyond a 1 year period shall be provided.

# PART 2 PRODUCTS

## 2.1 BASIC COMPONENTS

### 2.1.1 Curtain

The curtain shall be fabricated of 22 gauge galvanized steel slats conforming to ASTM A 653/A 653M, Coating Designation G90 as specified. Thickness of slat material shall be as required by width of opening or as required by specified fire-rating. Slats shall be approximately 1-1/4 to 1-1/2 inch wide with a depth of crown of 1/2 inch. Alternate slats shall be fitted with end locks to maintain curtain alignment. Bottom of curtain shall be provided with angle or tubular bar reinforcement matching the curtain, and fitted with a resilient bottom seal.

### 2.1.2 Jamb Guides

Guides shall be of 13 gauge minimum thickness galvanized steel angles conforming to ASTM A 653/A 653M, Coating Designation G90.

2.1.3 Counterbalance Shaft Assembly

The curtain shall be coiled around a steel tube of sufficient thickness and diameter to prevent deflection exceeding 0.03 inch per foot. The barrel shall contain oil tempered helical steel torsion springs capable of sufficient torque to counterbalance the weight of the curtain. Springs shall be calculated to provide a minimum of 7,500 operating cycles (one complete cycle of door operation will begin with the door in the closed position, move to the full open position and return to the closed position).

2.1.4 Brackets

Brackets shall be a minimum 12 gauge thickness steel if flat plate, or 16 gauge thickness if there are a minimum of 3 returns of 3/4 inch width.

2.1.5 Hood

The hood shall be of 24 gauge galvanized steel conforming to ASTM A 653/A 653M, Coating Designation G60 .

2.1.6 Locks

The curtain shall be locked at both sides of bottom bar by a chrome-plated cylinder lock keyed into the building keying system. Lock shall be on the pump room side of the counter door. Keying shall conform to Section 08710 BUILDERS' HARDWARE .

2.2 FIRE-RATED ROLLING COUNTER DOORS

Fire-rated rolling counter doors shall be Class A (3 hr.) rated and shall conform to the requirements specified and to NFPA 80 for the class indicated. Doors shall bear the labels of a recognized testing agency indicating the applicable fire resistance rating. The construction details necessary for labeled rolling counter doors shall take precedence over details indicated or specified herein. Door curtains, guides and hood shall be galvanized steel. Fire-rated rolling counter doors shall be complete with hardware, accessories, and automatic closing device.

2.3 OPERATION

2.3.1 Manual Operation

The curtain shall be operated by means of manual push-up with lift handles . .

2.4 AUTOMATIC CLOSING DEVICE

Fire-rated counter doors shall be equipped with an automatic closing device which shall operate upon activation of the building's fire alarm system . Fire and smoke doors shall be easily reset by the facility user after they have been released by the detection system. Resetting the door shall not require the use of special tools.

2.5 FINISH

Exposed parts of the counter door, including the curtain, bottom rail, guides, and hood shall be of uniform finish and appearance. Steel galvanized coating shall have a prime coat and a baked-on or powder-coated Factory top coat finish. All other steel parts shall be given a shop coat of primer paint standard with the manufacturer.

## PART 3 EXECUTION

### 3.1 INSTALLATION

Doors shall be installed in accordance with approved detail drawings and manufacturer's instructions. Anchors and inserts for guides, brackets, hardware, and other accessories shall be accurately located. Upon completion, doors shall be free from warp, twist, or distortion. Doors shall be lubricated, properly adjusted, and demonstrated to operate freely. Fire-door installation shall be in conformance with NFPA 80 for the class indicated and the manufacturer's instructions.

### 3.2 FIELD FINISHING

Doors to receive field finishing shall be factory primed, as required, and then shall be finished in accordance with Section 09900 PAINTING, GENERAL. Color shall be as required to match the color listed on drawings for exterior doors and door frames.

### 3.3 CLEANING

Aluminum and stainless steel doors shall be cleaned in accordance with manufacturer's approved instructions.

### 3.4 TESTS

The fire doors shall be drop tested in accordance with NFPA 80 to show proper operation and full automatic closure and shall be reset in accordance with the manufacturer's instructions. A written record of initial test shall be provided to the Contracting Officer.

-- End of Section --

SECTION TABLE OF CONTENTS

DIVISION 08 - DOORS AND WINDOWS

SECTION 08510

STEEL WINDOWS

**08/01**

PART 1 GENERAL

1.1 REFERENCES
1.2 SUBMITTALS
1.3 DELIVERY AND STORAGE

PART 2 PRODUCTS

2.1 MATERIALS
2.1.1 Sheet Steel
2.1.2 Zinc-Coated Sheet Steel
2.1.3 Zinc Coating
2.1.4 Corrosion Resisting Sheet Steel
2.1.5 Screws and Bolts
2.2 FABRICATION OF WINDOWS
2.3 FIRE RATED WINDOWS
2.4 PROVISIONS FOR GLAZING
2.5 METAL-TO-METAL JOINTS
2.6 ACCESSORIES
2.6.1 Anchors
2.6.2 Fasteners
2.6.3 Metal Sub-frames and Stools
2.7 WINDOW FINISH
2.7.1 Shop Primed Finish
2.8 WINDOW TYPES
2.8.1 Fixed Windows

PART 3 EXECUTION

3.1 INSTALLATION
3.2 ANCHORS AND FASTENINGS
3.3 CLEANING

-- End of Section Table of Contents --

SECTION 08510

STEEL WINDOWS
**08/01**

PART 1 GENERAL

1.1 REFERENCES

The publications listed below form a part of this specification to the extent referenced. The publications are referred to in the text by the basic designation only.

AMERICAN NATIONAL STANDARDS INSTITUTE (ANSI)

| | |
|---|---|
| ANSI B18.6.3 | (1972; R 1997) Machine Screws and Machine Screw Nuts |
| ANSI B18.6.4 | (1981; R 1997) Thread Forming and Threaded Cutting Tapping Screws and Metallic Drive Screws (Inch Series) |

AMERICAN SOCIETY FOR TESTING AND MATERIALS (ASTM)

| | |
|---|---|
| ASTM A 123/A 123M | (2001a) Zinc (Hot-Dip Galvanized) Coatings on Iron and Steel Products |
| ASTM A 167 | (1999) Stainless and Heat-Resisting Chromium-Nickel Steel Plate, Sheet, and Strip |
| ASTM A 569/A 569M | (1998) Steel, Carbon (0.15 Maximum Percent), Hot Rolled Sheet and Strip Commercial |
| ASTM A 653/A 653M | (2000) Steel Sheet, Zinc-Coated (Galvanized) or Zinc-Iron Alloy-Coated (Galvannealed) by the Hot-Dip Process |

NATIONAL FIRE PROTECTION ASSOCIATION (NFPA)

| | |
|---|---|
| NFPA 80 | (1999) Fire Doors and Fire Windows |
| NFPA 101 | (2000) Life Safety Code |

STEEL WINDOW INSTITUTE (SWI)

| | |
|---|---|
| SWI SWS | (1990) Steel Window Specifications |

1.2 SUBMITTALS

Submit the following in accordance with Section 01330, "Submittal Procedures."

SD-02 Shop Drawings

WindowsG-AO

Indicate elevations of windows, full-size sections, thicknesses and gages of metal, fastenings, proposed method of anchoring, size and spacing of anchors, details of construction, method of glazing, metal subframes, stools, casings, sills, trim, other related items, and installation details.

SD-03 Product Data

Fasteners

SD-04 Samples

Windows; G-AO

Submit one complete, full size glazed window of each type proposed for use, complete with hardware, anchors, and other accessories. After approval, install each sample in the work, clearly identified, with location recorded.

## 1.3 DELIVERY AND STORAGE

Deliver to project site in undamaged condition. Store windows and components on edge, out of contact with the ground, under weathertight covering, and arranged to avoid bending, warping, or other damage.

# PART 2 PRODUCTS

## 2.1 MATERIALS

### 2.1.1 Sheet Steel

ASTM A 569/A 569M.

### 2.1.2 Zinc-Coated Sheet Steel

ASTM A 653/A 653M.

### 2.1.3 Zinc Coating

ASTM A 123/A 123M.

### 2.1.4 Corrosion Resisting Sheet Steel

ASTM A 167.

### 2.1.5 Screws and Bolts

ANSI B18.6.3 or ANSI B18.6.4 as applicable.

## 2.2 FABRICATION OF WINDOWS

Form permanent joints by welding or mechanically fastening as specified for each type window. Use joints of strength to maintain structural value of members connected. Weld joints solid, remove excess metal, and dress smooth on exposed and contact surfaces. Closely fit joints formed with mechanical fastenings and make permanently watertight. Assemble frames and sash, including ventilators, at the plant and ship as a unit with hardware unattached. Provide the following construction:

Design glazed windows and rabbets suitable for glass thickness shown on drawings.

b. Use flathead, cross recessed type, exposed head screws and bolts with standard threads on windows, trim and accessories. Screw heads shall finish flush with adjoining surfaces. Self tapping sheet-metal screws are not acceptable.

c. For hot-dipped galvanized windows, use stainless steel or hot-spun galvanized steel fasteners. For windows with painted finish use cadmium plated or electro-galvanized fasteners. Finish exposed heads to match finish of windows.

## 2.3 FIRE RATED WINDOWS

Provide sash and frame with necessary hardware to conform to the requirements of Underwriters Laboratories Inc. (UL), for class of window indicated. Submit proof of conformance. UL label will be accepted as proof. Labeled window details take precedence over details indicated or specified for nonlabeled windows, except when sections required for nonlabeled windows are heavier than those required by UL. In lieu of UL label, written certification by approved nationally recognized testing agency may be submitted. Certification must state that complete window unit of type provided has been tested and conforms to published standards, including methods of tests, of UL.

## 2.4 PROVISIONS FOR GLAZING

Design sash for inside glazing and for securing glass with metal beads and glazing compound. Glass and glazing is specified in Section 08810A, "Glass and Glazing."

## 2.5 METAL-TO-METAL JOINTS

Set in mastic, using type recommended by window manufacturer to provide weathertight joints. Remove excess mastic before it hardens.

## 2.6 ACCESSORIES

Provide windows with hardware, clips, fins, anchors, glazing beads, and fastenings, necessary for complete installation and operation of ventilators.

### 2.6.1 Anchors

Use hot-dip galvanized steel anchors. Secure anchors and fastenings to heads, jambs, and sills of openings, and fasten securely to windows or frames. Use anchors recommended by window manufacturer for specific type of construction and conceal. Anchor each frame at jambs with minimum of three adjustable steel anchors.

### 2.6.2 Fasteners

Stainless steel stainless steel or aluminum materials; zinc-coated or cadmium plated steel elsewhere. Prime exposed heads of coated or plated fasteners and finish to match adjacent material.

2.6.3 Metal Sub-frames and Stools

Manufacturer's standard type designed to suit the particular window. Exposed surfaces to match windows.

2.7 WINDOW FINISH

2.7.1 Shop Primed Finish

After fabrication, clean all surfaces of windows, fins, mullions, cover plates, and screen frames and provide a phosphate-treated and shop-primed finish . The methods of cleaning, chemical treatment, galvanizing, and painting shall conform to SWI SWS. Windows shall receive finish paint coats as specified in Section 09900, "Paints and Coatings."

2.8 WINDOW TYPES

Conform to SWI SWS. Provide types and sizes indicated on the drawings. Each window shall consist of a unit including frame, sash, trim, and anchors.

2.8.1 Fixed Windows

Heavy Intermediate windows.

PART 3 EXECUTION

3.1 INSTALLATION

Install in accordance with window manufacturer's printed instructions and details. Install fire rated windows in accordance with NFPA 80 and NFPA 101. Build in windows as work progresses or install without forcing into prepared window openings. Set at proper elevation, location, and reveal; plumb, square, level, and in alignment. Brace and stay to prevent distortion and misalignment. Bed screws or bolts in sill members, joints at mullions, contacts of windows with sills, built-in fins, and subframes in mastic sealant recommended by window manufacturer. Install windows in a manner that will prevent entrance of water and wind.

3.2 ANCHORS AND FASTENINGS

Make provision for securing units to each other and to adjoining construction. Windows installed in direct contact with masonry shall have head and jamb members designed to enter into masonry not less than 7/16 inch. Where windows are set in prepared masonry openings, build in anchors and fastenings to jambs of openings and fasten securely to windows or frames and to adjoining construction. Space anchors not more than 18 inches apart on jambs and sills, and install a minimum of three anchors on each side of each opening. Anchors and fastenings shall have sufficient strength to hold member firmly in position. Where type, size, or spacing of anchors is not shown or specified, use expansion or toggle bolts or screws as best suited to construction material. Provide expansion shield and bolt assemblies of type designed to give holding power beyond tensile and shearing strength of bolt. Minimum fastener penetration shall be not less than that recommended by manufacturer for type fastener and wall material involved.

## 3.3 CLEANING

Clean interior and exterior surfaces of window units of mortar, plaster, paint spattering spots, and other foreign matter to present a neat appearance and to prevent fouling of weathering surfaces and weatherstripping, or interference with operation of hardware. Clean and touch up abraded surfaces. Replace with new windows any stained, discolored, or abraded windows that cannot be restored to original condition.

-- End of Section --

SECTION TABLE OF CONTENTS

DIVISION 08 - DOORS AND WINDOWS

SECTION 08710

DOOR HARDWARE

**02/02**

PART 1 GENERAL

1.1 REFERENCES
1.2 SUBMITTALS
1.3 HARDWARE SCHEDULE
1.4 KEY BITTING CHART REQUIREMENTS
1.5 QUALITY ASSURANCE
1.5.1 Hardware Manufacturers and Modifications
1.6 DELIVERY, STORAGE, AND HANDLING

PART 2 PRODUCTS

2.1 TEMPLATE HARDWARE
2.2 HARDWARE ITEMS
2.2.1 Hinges
2.2.2 Locks and Latches
2.2.2.1 Mortise Locks and Latches
2.2.2.2 Auxiliary Locks
2.2.3 Exit Devices
2.2.4 Cylinders and Cores
2.2.5 Keying System
2.2.6 Lock Trim
2.2.6.1 Knobs and Roses
2.2.6.2 Lever Handles
2.2.7 Keys
2.2.8 Door Bolts
2.2.9 Closers
2.2.9.1 Identification Marking
2.2.10 Door Stops and Silencers
2.2.11 Thresholds
2.2.12 Weather Stripping Gasketing
2.2.12.1 Extruded Aluminum Retainers
2.2.13 Special Tools
2.3 FASTENERS
2.4 FINISHES
2.5 KEY CABINET AND CONTROL SYSTEM

PART 3 EXECUTION

3.1 INSTALLATION
3.1.1 Weather Stripping Installation
3.1.2 Lightproofing Installation
3.1.3 Threshold Installation
3.2 HARDWARE LOCATIONS
3.3 KEY CABINET AND CONTROL SYSTEM
3.4 FIELD QUALITY CONTROL

3.5 HARDWARE SETS

-- End of Section Table of Contents --

SECTION 08710

DOOR HARDWARE
**02/02**

PART 1 GENERAL

1.1 REFERENCES

The publications listed below form a part of this specification to the extent referenced. The publications are referred to in the text by the basic designation only.

AMERICAN SOCIETY FOR TESTING AND MATERIALS (ASTM)

| | |
|---|---|
| ASTM E 283 | (1991) Rate of Air Leakage Through Exterior Windows, Curtain Walls, and Doors Under Specified Pressure Differences Across the Specimen |

BUILDERS HARDWARE MANUFACTURERS ASSOCIATION (BHMA)

| | |
|---|---|
| BHMA A156.1 | (1997) Butts and Hinges (BHMA 101) |
| BHMA A156.2 | (1996) Bored and Preassembled Locks and Latches (BHMA 601) |
| BHMA A156.3 | (1994) Exit Devices (BHMA 701) |
| BHMA A156.4 | (1992) Door Controls - Closers (BHMA 301) |
| ANSI/BHMA A156.5 | (2001) Auxiliary Locks & Associated Products |
| BHMA A156.5 | (1992) Auxiliary Locks & Associated Products (BHMA 501) |
| BHMA A156.7 | (1988) Template Hinge Dimensions |
| BHMA A156.13 | (1994) Mortise Locks & Latches (BHMA 621) |
| BHMA A156.16 | (1997) Auxiliary Hardware |
| ANSI/BHMA A156.18 | (1993) Materials and Finishes (BHMA 1301) |
| BHMA A156.21 | (1996) Thresholds |
| BHMA A156.22 | (1996) Door Gasketing Systems |

STEEL DOOR INSTITUTE (SDOI)

| | |
|---|---|
| SDI 100 | (1991) Standard Steel Doors and Frames |

1.2 SUBMITTALS

Submit the following in accordance with Section 01330, "Submittal

Procedures."

SD-02 Shop Drawings

Hardware schedule; G-AO

Keying systemG-AO

SD-03 Product Data

Hardware items; G-AO

SD-08 Manufacturer's Instructions

Installation; G-AO

SD-10 Operation and Maintenance Data

Hardware Schedule items, Data Package 1; G-AO

Submit data package in accordance with Section 01730, "Operation and Maintenance Support Information (OMSI)."

SD-11 Closeout Submittals

Key bitting

1.3 HARDWARE SCHEDULE

Prepare and submit hardware schedule in the following form:

| Hardware Item | Quantity | Size | Reference Publication Type No. | Finish | Mfr. Name and Catalog No. | Key Control Symbols | UL Mark (If fire rated and listed) | ANSI/BHMA Finish Designation |
|---|---|---|---|---|---|---|---|---|

1.4 KEY BITTING CHART REQUIREMENTS

Submit key bitting charts to the Contracting Officer prior to completion of the work. Include:

a. Complete listing of all keys (AA1, AA2, etc.).

b. Complete listing of all key cuts (AA1-123456, AA2-123458).

c. Tabulation showing which key fits which door.

d. Copy of floor plan showing doors and door numbers.

e. Listing of 20 percent more key cuts than are presently required in each master system.

1.5 QUALITY ASSURANCE

1.5.1 Hardware Manufacturers and Modifications

Provide, as far as feasible, locks, hinges, and closers of one lock, hinge, or closer manufacturer's make. Modify hardware as necessary to

provide features indicated or specified.

## 1.6 DELIVERY, STORAGE, AND HANDLING

Deliver hardware in original individual containers, complete with necessary appurtenances including fasteners and instructions. Mark each individual container with item number as shown in hardware schedule. Deliver permanent keys and removable cores to the Contracting Officer, either directly or by certified mail. Deliver construction master keys with the locks.

# PART 2 PRODUCTS

## 2.1 TEMPLATE HARDWARE

Hardware to be applied to metal shall be made to template. Promptly furnish template information or templates to door and frame manufacturers. Template hinges shall conform to BHMA A156.7. Coordinate hardware items to prevent interference with other hardware.

## 2.2 HARDWARE ITEMS

Hinges, pivots, locks, latches, exit devices, bolts, and closers shall be clearly and permanently marked with the manufacturer's name or trademark where it will be visible after the item is installed. For closers with covers, the name or trademark may be beneath the cover.

### 2.2.1 Hinges

BHMA A156.1, 4 1/2 by 4 1/2 inches unless otherwise specified. Construct loose pin hinges for exterior doors and reverse-bevel interior doors so that pins will be nonremovable when door is closed. Other antifriction bearing hinges may be provided in lieu of ball-bearing hinges.

### 2.2.2 Locks and Latches

#### 2.2.2.1 Mortise Locks and Latches

BHMA A156.13, Series 1000, Operational Grade 1, Security Grade 2. Provide mortise locks with escutcheons not less than 7 by 2 1/4 inches with a bushing at least 1/4 inch long. Cut escutcheons to suit cylinders and provide trim items with straight, beveled, or smoothly rounded sides, corners, and edges. Knobs and roses of mortise locks shall have screwless shanks and no exposed screws.

#### 2.2.2.2 Auxiliary Locks

BHMA A156.5, Grade 1.

### 2.2.3 Exit Devices

BHMA A156.3, Grade 1. Provide adjustable strikes for rim type and vertical rod devices. Provide open back strikes for pairs of doors with mortise and vertical rod devices. Touch bars may be provided in lieu of conventional crossbars and arms. Provide escutcheons, not less than 7 by 2 1/4 inches.

### 2.2.4 Cylinders and Cores

Provide cylinders and cores for new locks, including locks provided under

other sections of this specification. Cylinders and cores shall have seven pin tumblers. Cylinders shall be products of one manufacturer, and cores shall be the products of one manufacturer. Rim cylinders, mortise cylinders, shall have interchangeable cores which are removable by special control keys. Stamp each interchangeable core with a key control symbol in a concealed place on the core.

2.2.5 Keying System

Provide a grand master keying system Provide construction interchangeable cores.

2.2.6 Lock Trim

Cast, forged, or heavy wrought construction and commercial plain design.

2.2.6.1 Knobs and Roses

In addition to meeting test requirements of BHMA A156.2 and BHMA A156.13, knobs, roses, and escutcheons shall be 0.050 inch thick if unreinforced. If reinforced, outer shell shall be 0.035 inch thick and combined thickness shall be 0.070 inch, except knob shanks shall be 0.060 inch thick.

2.2.6.2 Lever Handles

Provide lever handles in lieu of knobs . Lever handles for exit devices shall meet the test requirements of BHMA A156.13 for mortise locks. Lever handle locks shall have a breakaway feature (such as a weakened spindle or a shear key) to prevent irreparable damage to the lock when a force in excess of that specified in BHMA A156.13 is applied to the lever handle. Lever handles shall return to within 1/2 inch of the door face.

2.2.7 Keys

Furnish one file key, one duplicate key, and one working key for each key change and for each master keying system. Furnish one additional working key for each lock of each keyed-alike group. Furnish 3 construction master keys, and 3 control keys for removable cores. Stamp each key with appropriate key control symbol and "U.S. property - Do not duplicate." Do not place room number on keys.

2.2.8 Door Bolts

BHMA A156.16. Provide dustproof strikes for bottom bolts, except for doors having metal thresholds. Automatic latching flush bolts: BHMA A156.3, Type 25.

2.2.9 Closers

BHMA A156.4, Series C02000, Grade 1, with PT 4C. Provide with brackets, arms, mounting devices, fasteners, full size covers. Size closers in accordance with manufacturer's recommendations, or provide multi-size closers, Sizes 1 through 6, and list sizes in the Hardware Schedule. Provide manufacturer's 10 year warranty.

2.2.9.1 Identification Marking

Engrave each closer with manufacturer's name or trademark, date of manufacture, and manufacturer's size designation located to be visible after installation.

2.2.10 Door Stops and Silencers

BHMA A156.16. Silencers Type L03011. Provide three silencers for each single door, two for each pair.

2.2.11 Thresholds

BHMA A156.21. Use J35100, with vinyl or silicone rubber insert in face of stop, for exterior doors opening out, unless specified otherwise.

2.2.12 Weather Stripping Gasketing

BHMA A156.22. Provide the type and function designation where specified in paragraph entitled "Hardware Schedule". A set shall include head and jamb seals, sweep strips, and, for pairs of doors, astragals. Air leakage of weather stripped doors shall not exceed 0.5 cubic feet per minute of air per square foot of door area when tested in accordance with ASTM E 283. Weather stripping shall be one of the following:

2.2.12.1 Extruded Aluminum Retainers

Extruded aluminum retainers not less than 0.050 inch wall thickness with vinyl, neoprene, silicone rubber, or polyurethane inserts. Aluminum shall be clear (natural) anodized.

2.2.13 Special Tools

Provide special tools, such as spanner and socket wrenches and dogging keys, required to service and adjust hardware items.

2.3 FASTENERS

Provide fasteners of proper type, quality, size, quantity, and finish with hardware. Fasteners exposed to weather shall be of nonferrous metal or stainless steel. Provide fasteners of type necessary to accomplish a permanent installation.

2.4 FINISHES

ANSI/BHMA A156.18. Hardware shall have BHMA 630 finish (satin stainless steel), unless specified otherwise. Provide items not manufactured in stainless steel in BHMA 626 finish (satin chromium plated) over brass or bronze, except surface door closers which shall have prime coat finish, and except steel hinges which shall have BHMA 652 finish (satin chromium plated) . Hinges for exterior doors shall be stainless steel with BHMA 630 finish. Exit devices may be provided in BHMA 630 finish . Exposed parts of concealed closers shall have finish to match lock and door trim. Hardware for aluminum doors shall be finished to match the doors.

2.5 KEY CABINET AND CONTROL SYSTEM

ANSI/BHMA A156.5, Type E8331 (25 hooks) .

PART 3 EXECUTION

3.1 INSTALLATION

Install hardware in accordance with manufacturers' printed instructions. Provide machine screws set in expansion shields for fastening hardware to solid concrete and masonry surfaces. Provide toggle bolts where required for fastening to hollow core construction. Provide through bolts where necessary for satisfactory installation.

3.1.1 Weather Stripping Installation

Handle and install weather stripping so as to prevent damage. Provide full contact, weather-tight seals. Doors shall operate without binding.

3.1.2 Lightproofing Installation

Install as specified for stop-applied weather stripping.

3.1.3 Threshold Installation

Extend thresholds the full width of the opening and notch end for jamb stops. Set thresholds in a full bed of sealant and anchor to floor with cadmium-plated, countersunk, steel screws .

3.2 HARDWARE LOCATIONS

SDI 100, unless indicated or specified otherwise.

3.3 KEY CABINET AND CONTROL SYSTEM

Locate where directed . Tag one set of file keys and one set of duplicate keys. Place other keys in appropriately marked envelopes, or tag each key. Furnish complete instructions for setup and use of key control system. On tags and envelopes, indicate door and room numbers or master or grand master key.

3.4 FIELD QUALITY CONTROL

After installation, protect hardware from paint, stains, blemishes, and other damage until acceptance of work. Submit notice of testing 15 days before scheduled, so that testing can be witnessed by the Contracting Officer. Adjust hinges, locks, latches, bolts, holders, closers, and other items to operate properly. Demonstrate that permanent keys operate respective locks, and give keys to the Contracting Officer. Correct, repair, and finish, as directed, errors in cutting and fitting and damage to adjoining work.

3.5 HARDWARE SETS

Hardware for aluminum doors shall be provided under this section. Deliver Hardware templates and hardware, except field-applied hardware to the aluminum door and frame manufacturer for use in fabricating the doors and frames.

HW-1

| | | |
|---|---|---|
| 3 pr. | Butts | A5111 |
| 1 ea. | Closer | CO2021 |

| | | |
|---|---|---|
| 1 ea. | Exit Device | Type 1 F08 |
| 1 set | Flush Bolts | LO4081 |
| 1 set | Weatherstripping | |
| 1 ea. | Threshold | J32180 |

HW-2

| | | |
|---|---|---|
| 1 1/2 pr. | Butts | A5111 |
| 1 ea. | Closer | CO2021 |
| 1 ea. | Exit Device | Type 1 FO8 |
| 1 set | Weatherstripping | |
| 1 ea. | Threshold | J32180 |

HW-3

| | | |
|---|---|---|
| 1 1/2 pr. | Butts | A5111 |
| 1 ea. | Lockset | F22 |
| 1 ea. | Wall Stop | LO2011 |

-- End of Section --

SECTION TABLE OF CONTENTS

DIVISION 08 - DOORS AND WINDOWS

SECTION 08810A

GLASS AND GLAZING

**05/97**

PART 1 GENERAL

1.1 REFERENCES
1.2 SUBMITTALS
1.3 SYSTEM DESCRIPTION
1.4 DELIVERY, STORAGE AND HANDLING
1.5 PROJECT/SITE CONDITIONS

PART 2 PRODUCTS

2.1 ROLLED GLASS
2.1.1 Wired Glass
2.2 INSULATING GLASS
2.3 GLAZING ACCESSORIES
2.3.1 Preformed Tape
2.3.2 Sealant
2.3.3 Glazing Gaskets
2.3.3.1 Fixed Glazing Gaskets
2.3.3.2 Wedge Glazing Gaskets
2.3.4 Setting and Edge Blocking

PART 3 EXECUTION

3.1 PREPARATION
3.2 INSTALLATION
3.3 CLEANING
3.4 PROTECTION

-- End of Section Table of Contents --

SECTION 08810A

GLASS AND GLAZING
05/97

PART 1 GENERAL

1.1 REFERENCES

The publications listed below form a part of this specification to the extent referenced. The publications are referred to in the text by basic designation only.

AMERICAN NATIONAL STANDARDS INSTITUTE (ANSI)

| | |
|---|---|
| ANSI Z97.1 | (1984; R 1994) Safety Performance Specifications and Methods of Test for Safety Glazing Materials Used in Buildings |

AMERICAN SOCIETY FOR TESTING AND MATERIALS (ASTM)

| | |
|---|---|
| ASTM C 509 | (1994) Elastomeric Cellular Preformed Gasket and Sealing Material |
| ASTM C 864 | (1999) Dense Elastomeric Compression Seal Gaskets, Setting Blocks, and Spacers |
| ASTM C 920 | (2002) Elastomeric Joint Sealants |
| ASTM C 1036 | (1991; R 1997) Flat Glass |
| ASTM D 395 | (1998) Rubber Property - Compression Set |
| ASTM E 773 | (1997) Accelerated Weathering of Sealed Insulating Glass Units |
| ASTM E 774 | (1997) Classification of the Durability of Sealed Insulating Glass Units |
| ASTM E 1300 | (1998) Determining the Minimum Thickness and Type of Glass Required to Resist a Specified Load |

GLASS ASSOCIATION OF NORTH AMERICA (GANA)

| | |
|---|---|
| GANA Glazing Manual | (1997) Glazing Manual |

NATIONAL FIRE PROTECTION ASSOCIATION (NFPA)

| | |
|---|---|
| NFPA 80 | (1999) Fire Doors and Fire Windows |
| NFPA 252 | (1995) Fire Tests of Door Assemblies |
| NFPA 257 | (1996) Fire Tests for Window and Glass Block Assemblies |

## 1.2 SUBMITTALS

Government approval is required for submittals with a "G" designation; submittals not having a "G" designation are for information only. When used, a designation following the "G" designation identifies the office that will review the submittal for the Government. The following shall be submitted in accordance with Section 01330 SUBMITTAL PROCEDURES:

SD-02 Shop Drawings

Installation; G, AO

Drawings showing complete details of the proposed setting methods, mullion details, edge blocking, size of openings, frame details, materials, and types and thickness of glass.

SD-03 Product Data

Glazing Accessories; G-AO

Manufacturer's descriptive product data, handling and storage recommendations, installation instructions, and cleaning instructions.

## 1.3 SYSTEM DESCRIPTION

Glazing systems shall be fabricated and installed watertight and airtight to withstand thermal movement and wind loading without glass breakage, gasket failure, deterioration of glazing accessories, and defects in the work. Glazed panels shall comply with the safety standards, as indicated in accordance with ANSI Z97.1. Glazed panels shall comply with indicated wind/snow loading in accordance with ASTM E 1300.

## 1.4 DELIVERY, STORAGE AND HANDLING

Glazing compounds shall be delivered to the site in the manufacturer's unopened containers. Glass shall be stored indoors in a safe, well ventilated dry location in accordance with manufacturer's instructions, and shall not be unpacked until needed for installation. Glass shall not be stored on site over 1 month.

## 1.5 PROJECT/SITE CONDITIONS

Glazing work shall not be started until outdoor temperature is above 40 degrees F and rising, unless procedures recommended by glass manufacturer and approved by Contracting Officer are made to warm the glass and rabbet surfaces. Ventilation shall be provided to prevent condensation of moisture on glazing work during installation. Glazing work shall not be performed during damp or raining weather.

# PART 2 PRODUCTS

## 2.1 ROLLED GLASS

### 2.1.1 Wired Glass

Wired glass shall be Type II flat type, Class 1 - translucent , 1 - wired and polished both sides , conforming to ASTM C 1036. Wire mesh shall be

polished stainless steel Mesh 1 - diamond . Wired glass for fire-rated windows shall bear an identifying UL label or the label of a nationally recognized testing agency, and shall be rated for 45 minutes when tested in accordance with NFPA 257. Wired glass for fire-rated doors shall be tested as part of a door assembly in accordance with NFPA 252.

## 2.2 INSULATING GLASS

Insulating glass shall be Class A preassembled units of dual-seal construction consisting of lites of glass separated by an aluminum, steel, or stainless steel, spacer and dehydrated space conforming to ASTM E 773 and ASTM E 774. Spacer shall be roll-formed, with bent or tightly welded or keyed and sealed joints to completely seal the spacer periphery and eliminate moisture and hydrocarbon vapor transmission into airspace through the corners. Primary seal shall be compressed polyisobutylene and the secondary seal shall be a specially formulated silicone. Glass types shall be wire glass.

## 2.3 GLAZING ACCESSORIES

### 2.3.1 Preformed Tape

Preformed tape shall be elastomeric rubber extruded into a ribbon of a width and thickness suitable for specific application. Tape shall be of type which will remain resilient, have excellent adhesion, and be chemically compatible to glass, metal, or wood.

### 2.3.2 Sealant

Sealant shall be elastomeric conforming to ASTM C 920, Type S or M, Grade NS, Class 12.5, Use G, of type chemically compatible with setting blocks, preformed sealing tape and sealants used in manufacturing insulating glass. Color of sealant shall be as selected from manufacturer's full range of colors.

### 2.3.3 Glazing Gaskets

Glazing gaskets shall be extruded with continuous integral locking projection designed to engage into metal glass holding members to provide a watertight seal during dynamic loading, building movements and thermal movements. Glazing gaskets for a single glazed opening shall be continuous one-piece units with factory-fabricated injection-molded corners free of flashing and burrs. Glazing gaskets shall be in lengths or units recommended by manufacturer to ensure against pull-back at corners. Glazing gasket profiles shall be as indicated on drawings.

#### 2.3.3.1 Fixed Glazing Gaskets

Fixed glazing gaskets shall be closed-cell (sponge) smooth extruded compression gaskets of cured elastomeric virgin neoprene compounds conforming to ASTM C 509, Type 2, Option 1.

#### 2.3.3.2 Wedge Glazing Gaskets

Wedge glazing gaskets shall be high-quality extrusions of cured elastomeric virgin neoprene compounds, ozone resistant, conforming to ASTM C 864, Option 1, Shore A durometer between 65 and 75.

2.3.4 Setting and Edge Blocking

Neoprene setting blocks shall be dense extruded type conforming to ASTM D 395, Method B, Shore A durometer between 70 and 90. Edge blocking shall be Shore A durometer of 50 (+ or - 5). Silicone setting blocks shall be required when blocks are in contact with silicone sealant. Profiles, lengths and locations shall be as required and recommended in writing by glass manufacturer.

PART 3 EXECUTION

3.1 PREPARATION

Openings and framing systems scheduled to receive glass shall be examined for compliance with approved shop drawings, GANA Glazing Manual and glass manufacturer's recommendations including size, squareness, offsets at corners, presence and function of weep system, face and edge clearance requirements and effective sealing between joints of glass-framing members. Detrimental materials shall be removed from glazing rabbet and glass surfaces and wiped dry with solvent. Glazing surfaces shall be dry and free of frost.

3.2 INSTALLATION

Glass and glazing work shall be performed in accordance with approved shop drawings, GANA Glazing Manual, glass manufacturer's instructions and warranty requirements. Glass shall be installed with factory labels intact and removed only when instructed. Wired glass shall be installed in accordance with NFPA 80. Edges and corners shall not be ground, nipped or cut after leaving factory. Springing, forcing or twisting of units during installation will not be permitted.

3.3 CLEANING

Upon completion of project, outside surfaces of glass shall be washed clean and the inside surfaces of glass shall be washed and polished in accordance with glass manufacturer's recommendations.

3.4 PROTECTION

Glass work shall be protected immediately after installation. Glazed openings shall be identified with suitable warning tapes, cloth or paper flags, attached with non-staining adhesives. Reflective glass shall be protected with a protective material to eliminate any contamination of the reflective coating. Protective material shall be placed far enough away from the coated glass to allow air to circulate to reduce heat buildup and moisture accumulation on the glass. Glass units which are broken, chipped, cracked, abraded, or otherwise damaged during construction activities shall be removed and replaced with new units.

-- End of Section --

SECTION TABLE OF CONTENTS

DIVISION 09 - FINISHES

SECTION 09250

GYPSUM BOARD

**11/01**

PART 1 GENERAL

1.1 REFERENCES
1.2 SUBMITTALS
1.3 DELIVERY, STORAGE, AND HANDLING
1.3.1 Delivery
1.3.2 Storage
1.3.3 Handling
1.4 ENVIRONMENTAL CONDITIONS
1.4.1 Temperature
1.4.2 Exposure to Weather
1.5 QUALIFICATIONS

PART 2 PRODUCTS

2.1 MATERIALS
2.1.1 Gypsum Board
2.1.1.1 Type X (Special Fire-Resistant)
2.1.2 Joint Treatment Materials
2.1.2.1 Embedding Compound
2.1.2.2 Finishing or Topping Compound
2.1.2.3 All-Purpose Compound
2.1.2.4 Setting or Hardening Type Compound
2.1.2.5 Joint Tape
2.1.3 Fasteners
2.1.3.1 Nails
2.1.3.2 Screws
2.1.4 Adhesives
2.1.4.1 Adhesive for Fastening Gypsum Board to Metal Framing
2.1.4.2 Adhesive for Fastening Gypsum Board to Wood Framing
2.1.4.3 Adhesive for Laminating
2.1.5 Accessories
2.1.6 Water
2.2 NON-LOADBEARING STUD WALLS STEEL FRAMING
2.2.1 Studs
2.2.2 Runner Tracks
2.3 SUSPENDED CEILING STEEL FRAMING

PART 3 EXECUTION

3.1 EXAMINATION
3.1.1 Framing and Furring
3.2 APPLICATION OF GYPSUM BOARD
3.2.1 Application of Gypsum Board to Steel Framing and Furring
3.2.2 Control Joints
3.3 FINISHING OF GYPSUM BOARD

3.3.1 Uniform Surface
3.4 SEALING
3.5 FIRE-RESISTANT ASSEMBLIES
3.6 PATCHING
3.7 INTERIOR WALL FRAMING
3.7.1 Wall Openings
3.7.2 Blocking
3.8 SUSPENDED CEILING FRAMING
3.8.1 Hangers
3.8.2 Main Runners
3.8.3 Furring Channels
3.8.4 Ceiling Openings
3.8.5 Light Fixtures and Air Diffusers
3.8.6 Interior Ceilings With Perimeter Relief
3.8.7 Interior Ceilings Without Perimeter Relief

-- End of Section Table of Contents --

SECTION 09250

GYPSUM BOARD
**11/01**

PART 1 GENERAL

1.1 REFERENCES

The publications listed below form a part of this specification to the extent referenced. The publications are referred to in the text by the basic designation only.

ASTM INTERNATIONAL (ASTM)

| | |
|---|---|
| ASTM C 36/C 36M | (1999) Gypsum Wallboard |
| ASTM C 475 | (1994) Joint Compound and Joint Tape for Finishing Gypsum Board |
| ASTM C 514 | (1996) Nails for the Application of Gypsum Board |
| ASTM C 557 | (1999) Adhesives for Fastening Gypsum Wallboard to Wood Framing |
| ASTM C 754 | (2000) Installation of Steel Framing Members to Receive Screw-Attached Gypsum Panel Products |
| ASTM C 840 | (2001) Application and Finishing of Gypsum Board |
| ASTM C 954 | (2000) Steel Drill Screws for the Application of Gypsum Board or Metal Plaster Bases to Steel Studs from 0.033 in. (0.84 mm) to 0.112 in. (2.84 mm) in Thickness |
| ASTM C 1002 | (2000) Steel Drill Screws for the Application of Gypsum Panel Products or Metal Plaster Bases |
| ASTM C 1047 | (1999) Accessories for Gypsum Wallboard and Gypsum Veneer Base |
| ASTM C 1396/C 1396M | (2000) Standard Specification for Gypsum Board |

ASTM INTERNATIONAL (ASTM)

| | |
|---|---|
| ASTM C 645 | (2000) Nonstructural Steel Framing Members |

GYPSUM ASSOCIATION (GA)

| | |
|---|---|
| GA 214 | (1996) Recommended Levels of Gypsum Board |

Finish

GA 216 (2000) Application and Finishing of Gypsum Board

UNDERWRITERS LABORATORIES (UL)

UL Fire Resist Dir (2001) Fire Resistance Directory (2 Vol.)

## 1.2 SUBMITTALS

Government approval is required for submittals with a "G" designation; submittals not have a "G" designation are for information only. When used, a designation following the "G" designation identifies the office that will review the submittal for the Government. The following shall be submitted in accordance with Section 01330, "Submittal Procedures."

SD-02 Shop Drawings

Steel Framing; G-AO

Control Joints; G-AO

Drawings and installation details for ceiling framing, furring, special wall framing, and framed openings in walls and ceilings.

SD-07 Certificates

Gypsum Board;

Steel Framing;

Certify that gypsum board types, gypsum backing board types, cementitious backer units, and joint treating materials do not contain asbestos. Provide certificates stating that the steel framing and gypsum wallboard meet the specified requirements.

## 1.3 DELIVERY, STORAGE, AND HANDLING

### 1.3.1 Delivery

Deliver materials in the original packages, containers, or bundles with each bearing the brand name, applicable standard designation, and name of manufacturer, or supplier.

### 1.3.2 Storage

Keep materials dry by storing inside a sheltered building. Where necessary to store gypsum board and cementitious backer units outside, store off the ground, properly supported on a level platform, and protected from direct exposure to rain, snow, sunlight, and other extreme weather conditions. Provide adequate ventilation to prevent condensation.

### 1.3.3 Handling

Neatly stack gypsum board and cementitious backer units flat to prevent sagging or damage to the edges, ends, and surfaces.

## 1.4 ENVIRONMENTAL CONDITIONS

### 1.4.1 Temperature

Maintain a uniform temperature of not less than 50 degrees F in the structure for at least 48 hours prior to, during, and following the application of gypsum board, cementitious backer units, and joint treatment materials, or the bonding of adhesives.

### 1.4.2 Exposure to Weather

Protect gypsum board and cementitious backer unit products from direct exposure to rain, snow, sunlight, and other extreme weather conditions.

## 1.5 QUALIFICATIONS

Manufacturer shall specialize in manufacturing the types of material specified and shall have a minimum of 5 years of documented successful experience. Installer shall specialize in the type of gypsum board work required and shall have a minimum of 3 years of documented successful experience.

# PART 2 PRODUCTS

## 2.1 MATERIALS

Conform to specifications, standards and requirements specified herein. Provide gypsum board types, studs, suspended ceiling framing, and joint treating materials manufactured from asbestos free materials only.

### 2.1.1 Gypsum Board

ASTM C 36/C 36M and ASTM C 1396/C 1396M.

#### 2.1.1.1 Type X (Special Fire-Resistant)

48 inches wide, 5/8 inch thick, tapered edges.

### 2.1.2 Joint Treatment Materials

ASTM C 475.

#### 2.1.2.1 Embedding Compound

Specifically formulated and manufactured for use in embedding tape at gypsum board joints and compatible with tape, substrate and fasteners.

#### 2.1.2.2 Finishing or Topping Compound

Specifically formulated and manufactured for use as a finishing compound.

#### 2.1.2.3 All-Purpose Compound

Specifically formulated and manufactured to serve as both a taping and a finishing compound and compatible with tape, substrate and fasteners.

#### 2.1.2.4 Setting or Hardening Type Compound

Specifically formulated and manufactured for use with fiber glass mesh tape.

2.1.2.5 Joint Tape

Cross-laminated, tapered edge, reinforced paper, or fiber glass mesh tape recommended by the manufacturer.

2.1.3 Fasteners

2.1.3.1 Nails

ASTM C 514.

2.1.3.2 Screws

ASTM C 1002, Type "G", Type "S" or Type "W" steel drill screws for fastening gypsum board to gypsum board, wood framing members and steel framing members less than 0.033 inch thick. ASTM C 954 steel drill screws for fastening gypsum board to steel framing members 0.033 to 0.112 inch thick. Provide cementitious backer unit screws with a polymer coating.

2.1.4 Adhesives

Do not use adhesive containing benzene, carbon tetrachloride, or trichloroethylene.

2.1.4.1 Adhesive for Fastening Gypsum Board to Metal Framing

Type recommended by gypsum board manufacturer.

2.1.4.2 Adhesive for Fastening Gypsum Board to Wood Framing

ASTM C 557.

2.1.4.3 Adhesive for Laminating

For laminating two-ply gypsum board systems and gypsum studs to face panels, provide adhesive recommended by gypsum board manufacturer.

2.1.5 Accessories

ASTM C 1047. Fabricate from corrosion protected steel or plastic designed for intended use. Accessories manufactured with paper flanges are not acceptable. Flanges shall be free of dirt, grease, and other materials that may adversely affect bond of joint treatment.

2.1.6 Water

Clean, fresh, and potable.

2.2 NON-LOADBEARING STUD WALLS STEEL FRAMING

2.2.1 Studs

Studs for non-loadbearing walls shall conform to ASTM C 645. Studs shall be C-shaped, roll formed steel with minimum uncoated design thickness of 0.0284 in. made from G40 hot-dip galvanized coated sheet.

2.2.2 Runner Tracks

Floor and ceiling runner tracks shall conform to ASTM C 645. Tracks shall be prefabricated, U-shaped with minimum 1 inch flanges, unpunched web, thickness to match studs, made from G40 hot-dip galvanized coated sheet.

2.3 SUSPENDED CEILING STEEL FRAMING

Suspended ceiling framing system shall have the capability to support the finished ceiling, light fixtures, air diffusers, and accessories, as shown. The suspension system shall have a maximum deflection of L/240. Carrying channels shall be formed from minimum 0.0548 inch thick cold-rolled steel, 1-1/2 x 3/4 inch. Furring members shall be formed from cold-rolled steel, 7/8 x 2-9/16 inch. Carrying channels and furring members shall be made from hot-dip galvanized coated sheet.

PART 3 EXECUTION

3.1 EXAMINATION

3.1.1 Framing and Furring

Verify that framing and furring are securely attached and of sizes and spacing to provide a suitable substrate to receive gypsum board and cementitious backer units. Verify that all blocking, headers and supports are in place to support plumbing fixtures and to receive soap dishes, grab bars, towel racks, and similar items. Do not proceed with work until framing and furring are acceptable for application of gypsum board and cementitious backer units.

3.2 APPLICATION OF GYPSUM BOARD

Apply gypsum board to framing and furring members in accordance with ASTM C 840 or GA 216 and the requirements specified herein. Apply gypsum board with separate panels in moderate contact; do not force in place. Stagger end joints of adjoining panels. Neatly fit abutting end and edge joints. Use gypsum board of maximum practical length. Cut out gypsum board as required to make neat close joints around openings. In vertical application of gypsum board, provide panels in lengths required to reach full height of vertical surfaces in one continuous piece. Surfaces of gypsum board and substrate members may be bonded together with an adhesive, except where prohibited by fire rating(s). Treat edges of cutouts for plumbing pipes, screwheads, and joints with water-resistant compound as recommended by the gypsum board manufacturer. Provide type of gypsum board for use in each system specified herein as indicated.

3.2.1 Application of Gypsum Board to Steel Framing and Furring

Apply in accordance with ASTM C 840, System VIII or GA 216.

3.2.2 Control Joints

Install expansion and contraction joints in ceilings and walls in accordance with ASTM C 840, System XIII or GA 216, unless indicated otherwise. Control joints between studs in fire-rated construction shall be filled with firesafing insulation to match the fire-rating of construction.

## 3.3 FINISHING OF GYPSUM BOARD

Tape and finish gypsum board in accordance with ASTM C 840, GA 214 and GA 216. Unless otherwise specified, all gypsum board walls, partitions and ceilings shall be finished to Level 5 in accordance with GA 214. Provide joint, fastener depression, and corner treatment. Do not use fiber glass mesh tape with conventional drying type joint compounds; use setting or hardening type compounds only.

### 3.3.1 Uniform Surface

Wherever gypsum board is to receive eggshell, semigloss or gloss paint finish, or where severe, up or down lighting conditions occur, finish gypsum wall surface in accordance to GA 214 Level 5. In accordance with GA 214 Level 5, apply a thin skim coat of joint compound to the entire gypsum board surface, after the two-coat joint and fastener treatment is complete and dry.

## 3.4 SEALING

Seal openings around pipes, fixtures, and other items projecting through gypsum board as specified in Section 07900A "Joint Sealing." Apply material with exposed surface flush with gypsum board.

## 3.5 FIRE-RESISTANT ASSEMBLIES

Wherever fire-rated construction is indicated, provide materials and application methods, including types and spacing of fasteners, wall and ceiling framing in accordance with the specifications contained in UL Fire Resist Dir for the fire resistance indicated. Joints of fire-rated gypsum board enclosures shall be closed and sealed in accordance with UL test requirements. Penetrations through rated partitions and ceilings shall be sealed tight in accordance with tested systems. Fire ratings shall be as indicated.

## 3.6 PATCHING

Patch surface defects in gypsum board to a smooth, uniform appearance, ready to receive finish as specified.

## 3.7 INTERIOR WALL FRAMING

Steel framing and furring members shall be installed in accordance with ASTM C 754. Members shall be in alignment with spacings not to exceed the maximum spacings indicated on drawings. Runners shall be aligned accurately at the floor and ceiling and securely anchored.

### 3.7.1 Wall Openings

The framing system shall provide for the installation and anchorage of the required subframes or finish frames for wall openings at doors, pass-through openings, and access panels. Partitions abutting continuous suspended ceilings shall be strengthened for rigidity at rough openings of more than 30 inches wide. Studs at openings shall be 0.0329 in minimum bare metal thickness and spot grouted at jamb anchor inserts. Double studs shall be fastened together with screws and secured to floor and overhead structure.

### 3.7.2 Blocking

Blocking shall be provided as necessary for mounted equipment. Blocking shall be metal or wood and shall be cut to fit between framing members. Blocking shall be rigidly anchored to the framing members. Under no circumstances will accessories or other wall mounted equipment be anchored directly to gypsum wallboard.

## 3.8 SUSPENDED CEILING FRAMING

Suspended ceiling system framing shall be installed in accordance with ASTM C 754.

### 3.8.1 Hangers

Hangers shall be spaced not more than 48 inches along runner channels and 36 inches in the other direction or 42 inches in both directions unless otherwise indicated. Locations of hanger wires shall be coordinated with other work. Hangers at ends of runner channels shall be located not more than 6 inches from wall. Hanger wire shall be looped around bottom chord of open-web steel joists, or secured to structural elements with suitable fasteners. Sags or twists which develop in the suspended system shall be adjusted. Damaged or faulty parts shall be replaced.

### 3.8.2 Main Runners

Main runner channels shall be installed in accordance with ASTM C 754. Hanger wires shall be double strand saddle-tied to runner channels and the ends of hanger wire shall be twisted three times around itself. Main runners shall be located to within 6 inches of the paralleling wall to support the ends of cross furring. Main runners shall not come in contact with abutting masonry or concrete walls. Where main runners are spliced, ends shall be overlapped 12 inches with flanges of channels interlocked, and shall be securely tied at each end of splice with wire looped twice around the channels.

### 3.8.3 Furring Channels

Furring channels shall be spaced in accordance with ASTM C 754. Furring channels shall be secured to the runner channels and to structural supports at each crossing with tie wire, hairpin clips, or equivalent fastenings. Furring channels shall be located within 2 inches of parallel walls and beams, and shall be cut 1/2 inch short of abutting walls.

### 3.8.4 Ceiling Openings

Support members shall be provided as required at ceiling openings for access panels, recessed light fixtures, and air supply or exhaust. Support members shall be not less than 1-1/2 inch main runner channels and vertically installed suspension wires or straps shall be located to provide at least the minimum support specified herein for furring and wallboard attachment. Intermediate structural members not a part of the structural system shall be provided for attachment or suspension of support members.

### 3.8.5 Light Fixtures and Air Diffusers

Light fixtures and air diffusers shall be supported directly from suspended ceiling runners. Wires shall be provided at appropriate locations to carry the weight of recessed or surface mounted light fixtures and air diffusers.

3.8.6 Interior Ceilings With Perimeter Relief

Control joints shall be installed so that linear dimensions between control joints shall not exceed 50 feet in either direction nor more than 2500 square feet.

3.8.7 Interior Ceilings Without Perimeter Relief

Control joints shall be installed so that linear dimensions between control joints shall not exceed 30 feet in either direction nor more than 900 square feet.

-- End of Section --

SECTION TABLE OF CONTENTS

DIVISION 09 - FINISHES

SECTION 09510

ACOUSTICAL CEILINGS

**07/02**

PART 1 GENERAL

1.1 REFERENCES
1.2 SUBMITTALS
1.3 GENERAL REQUIREMENTS
1.4 DELIVERY AND STORAGE
1.5 ENVIRONMENTAL REQUIREMENTS
1.6 SCHEDULING
1.7 WARRANTY
1.8 EXTRA MATERIALS

PART 2 PRODUCTS

2.1 ACOUSTICAL UNITS
2.1.1 Units for Exposed-Grid System
2.2 SUSPENSION SYSTEM
2.3 HANGERS
2.4 FINISHES
2.5 CEILING ATTENUATION CLASS AND TEST

PART 3 EXECUTION

3.1 INSTALLATION
3.1.1 Suspension System
3.1.1.1 Plumb Hangers
3.1.1.2 Splayed Hangers
3.1.2 Wall Molding
3.1.3 Acoustical Units
3.1.4 Caulking
3.2 CLEANING

-- End of Section Table of Contents --

SECTION 09510

ACOUSTICAL CEILINGS
**07/02**

PART 1 GENERAL

1.1 REFERENCES

The publications listed below form a part of this specification to the extent referenced. The publications are referred to within the text by the basic designation only.

ASTM INTERNATIONAL (ASTM)

| | |
|---|---|
| ASTM C 635 | (2000) Manufacture, Performance, and Testing of Metal Suspension Systems for Acoustical Tile and Lay-In Panel Ceilings |
| ASTM C 636 | (1996) Installation of Metal Ceiling Suspension Systems for Acoustical Tile and Lay-In Panels |
| ASTM E 580 | (2000) Application of Ceiling Suspension Systems for Acoustical Tile and Lay-In Panels in Areas Requiring Moderate Seismic Restraint |
| ASTM E 795 | (2000) Mounting Test Specimens During Sound Absorption Tests |
| ASTM E 1264 | (1998) Acoustical Ceiling Products |
| ASTM E 1414 | (2000a) Airborne Sound Attentuation Between Rooms Sharing a Common Ceiling Plenum |

U.S. ARMY CORPS OF ENGINEERS (USACE)

| | |
|---|---|
| TI 809-04 | (1998) Seismic Design for Buildings |

1.2 SUBMITTALS

Government approval is required for submittals with a "G" designation; submittals not having a "G" designation are for information only or as otherwise designated. When used, a designation following the "G" designation identifies the office that will review the submittal for the Government. The following shall be submitted in accordance with Section 01330 SUBMITTAL PROCEDURES:

SD-02 Shop Drawings

Approved Detail Drawings; G-AE

Drawings showing suspension system, method of anchoring and

fastening, details, and reflected ceiling plan.

SD-03 Product Data

Acoustical Units; G-AE

Manufacturer's descriptive data, catalog cuts, and installation instructions. Submittals which do not provide adequate data for the product evaluation will be rejected.

SD-04 Samples

Acoustical Units; G-AE
Suspension System

Two samples of each type of acoustical unit and each type of suspension grid tee section showing texture, finish, and color.

SD-06 Test Reports

SD-07 Certificates

Acoustical Units;

Certificate attesting that the mineral based acoustical units furnished for the project contain recycled material and showing an estimated percent of such material.

## 1.3 GENERAL REQUIREMENTS

Acoustical treatment shall consist of sound controlling units mechanically mounted on a ceiling suspension system. The unit size, texture, finish, and color shall be as specified. . The location and extent of acoustical treatment shall be as shown on the approved detail drawings. Reclamation of mineral fiber acoustical ceiling panels to be removed from the job site shall be in accordance with paragraph RECLAMATION PROCEDURES.

## 1.4 DELIVERY AND STORAGE

Materials shall be delivered to the site in the manufacturer's original unopened containers with brand name and type clearly marked. Materials shall be carefully handled and stored in dry, watertight enclosures. Immediately before installation, acoustical units shall be stored for not less than 24 hours at the same temperature and relative humidity as the space where they will be installed in order to assure proper temperature and moisture acclimation.

## 1.5 ENVIRONMENTAL REQUIREMENTS

A uniform temperature of not less than 60 degrees F nor more than 85 degrees F and a relative humidity of not more than 70 percent shall be maintained for 24 hours before, during, and 24 hours after installation of acoustical units.

1.6 SCHEDULING

Interior finish work such as plastering, concrete and terrazzo work shall be complete and dry before installation. Mechanical, electrical, and other work above the ceiling line shall be completed and heating, ventilating, and air conditioning systems shall be installed and operating in order to maintain temperature and humidity requirements.

1.7 WARRANTY

Manufacturer's standard performance guarantees or warranties that extend beyond a one year period shall be provided. Standard performance guarantee or warranty shall contain an agreement to repair or replace acoustical panels that fail within the warranty period. Failures include, but are not limited to, sagging and warping of panels; rusting and manufacturers defects of grid system.

1.8 EXTRA MATERIALS

Spare tiles of each color shall be furnished at the rate of 20 tiles for each 1000 tiles installed. Tiles shall be from the same lot as those installed.

PART 2 PRODUCTS

2.1 ACOUSTICAL UNITS

Contractor shall comply with EPA requirements in accordance with Section 01670 RECYCLED / RECOVERED MATERIALS. Acoustical units shall conform to ASTM E 1264, Class A, and the following requirements:

2.1.1 Units for Exposed-Grid System

Type: III (non-asbestos mineral fiber with painted finish) .

Minimum NRC: 0.55 when tested on mounting Type E-400 of ASTM E 795.

Pattern: E .

Nominal size: 24 by 24 inches.

Edge detail: Tegular Trim.

Finish: Factory-applied standard finish .

Minimum LR coefficient: LR-1, 0.75 or greater .

Minimum CAC: 40 .

Flame Spread: Class A, 25 or less

2.2 SUSPENSION SYSTEM

Suspension system shall be standard pan, and shall conform to ASTM C 635 for intermediate-duty systems . Surfaces exposed to view shall be aluminum or steel with a factory-applied white baked-enamel finish . Wall molding shall have a flange of not less than 15/16 inch . Inside and outside corner caps Mitered corners shall be provided. Suspended ceiling framing system shall have the capability to support the finished ceiling, light

fixtures, air diffusers, and accessories, as shown. The suspension system shall have a maximum deflection of 1/360 of span length. Suspension shall comply with force protection requirements by incorporating seismic details and guidance in TI 809-04 and ASTM E 580 .

## 2.3 HANGERS

Hangers and attachment shall support a minimum 300 pound ultimate vertical load without failure of supporting material or attachment.

## 2.4 FINISHES

Acoustical units and suspension system members shall have manufacturer's standard textures, patterns and finishes as specified. Ceiling suspension system components shall be treated to inhibit corrosion.

## 2.5 CEILING ATTENUATION CLASS AND TEST

Ceiling attenuation class (CAC) range of acoustical units, when required, shall be determined in accordance with ASTM E 1414. Test ceiling shall be continuous at the partition and shall be assembled in the suspensin system in the same manner that the ceiling will be installed on the project. System shall be tested with all acoustical units installed.

# PART 3 EXECUTION

## 3.1 INSTALLATION

Acoustical work shall be provided complete with necessary fastenings, clips, and other accessories required for a complete installation. Mechanical fastenings shall not be exposed in the finished work. Hangers shall be laid out for each individual room or space. Hangers shall be placed to support framing around beams, ducts, columns, grilles, and other penetrations through ceilings. Main runners and carrying channels shall be kept clear of abutting walls and partitions. At least two main runners shall be provided for each ceiling span. Wherever required to bypass an object with the hanger wires, a subsuspension system shall be installed, so that all hanger wires will be plumb.

### 3.1.1 Suspension System

Suspension system shall be installed in accordance with ASTM C 636 and as specified herein. There shall be no hanger wires or other loads suspended from underside of steel decking.

#### 3.1.1.1 Plumb Hangers

Hangers shall be plumb and shall not press against insulation covering ducts and pipes. Where lighting fixtures are supported from the suspended ceiling system, hangers shall be provided at a minimum of four hangers per fixture and located not more than 6 inches from each corner of each fixture.

#### 3.1.1.2 Splayed Hangers

Where hangers must be splayed (sloped or slanted) around obstructions, the resulting horizontal force shall be offset by bracing, countersplaying, or other acceptable means.

3.1.2 Wall Molding

Wall molding shall be provided where ceilings abut vertical surfaces. Miter corners where wall moldings intersect or install corner caps. Wall molding shall be secured not more than 3 inches from ends of each length and not more than 16 inches on centers between end fastenings. Wall molding springs shall be provided at each acoustical unit in semi-exposed or concealed systems.

3.1.3 Acoustical Units

Acoustical units shall be installed in accordance with the approved installation instructions of the manufacturer. Edges of acoustical units shall be in close contact with metal supports, with each other, and in true alignment. Acoustical units shall be arranged so that units less than one-half width are minimized. Units in exposed-grid system shall be held in place with manufacturer's standard hold-down clips, if units weigh less than 1 psf or if required for fire resistance rating.

3.1.4 Caulking

Seal all joints around pipes, ducts or electrical outlets penetrating the ceiling. Apply a continuous ribbon of acoustical sealant on vertical web of wall or edge moldings. See Section 07900A JOINT SEALING.

3.2 CLEANING

Following installation, dirty or discolored surfaces of acoustical units shall be cleaned and left free from defects. Units that are damaged or improperly installed shall be removed and new units provided as directed.

-- End of Section --

SECTION TABLE OF CONTENTS

DIVISION 09 - FINISHES

SECTION 09650

RESILIENT FLOORING

**08/02**

PART 1 GENERAL

1.1 REFERENCES
1.2 FIRE RESISTANCE REQUIREMENTS
1.3 SUBMITTALS
1.4 DELIVERY AND STORAGE
1.5 ENVIRONMENTAL REQUIREMENTS
1.6 SCHEDULING
1.7 WARRANTY
1.8 EXTRA MATERIALS

PART 2 PRODUCTS

2.1 TILE FLOORING
2.1.1 Vinyl-Composition Tile
2.2 WALL BASE
2.3 POLISH/FINISH
2.4 CAULKING AND SEALANTS
2.5 MANUFACTURER'S COLOR AND TEXTURE
2.6 ADHESIVE

PART 3 EXECUTION

3.1 EXAMINATION/VERIFICATION OF CONDITIONS
3.2 SURFACE PREPARATION
3.3 MOISTURE TEST
3.4 GENERAL APPLICATION REQUIREMENTS
3.5 INSTALLATION OF VINYL-COMPOSITION TILE
3.6 INSTALLATION OF WALL BASE
3.7 CLEANING
3.8 PROTECTION

-- End of Section Table of Contents --

SECTION 09650

RESILIENT FLOORING
**08/02**

PART 1 GENERAL

1.1 REFERENCES

The publications listed below form a part of this specification to the extent referenced. The publications are referred to within the text by the basic designation only.

AMERICAN SOCIETY FOR TESTING AND MATERIALS (ASTM)

| | |
|---|---|
| ASTM D 4078 | (1992; R 1996) Water Emulsion Floor Polish |
| ASTM E 648 | (2000) Critical Radiant Flux of Floor-Covering Systems Using a Radiant Heat Energy Source |
| ASTM E 662 | (2001) Specific Optical Density of Smoke Generated by Solid Materials |
| ASTM F 1066 | (1999) Vinyl Composition Floor Tile |

1.2 FIRE RESISTANCE REQUIREMENTS

Flooring in corridors and exits shall have a minimum average critical radiant flux of 0.45 watts per square centimeter when tested in accordance with ASTM E 648. The smoke density rating shall be less than 450 when tested in accordance with ASTM E 662.

1.3 SUBMITTALS

Government approval is required for submittals with a "G" designation; submittals not having a "G" designation are for information only or as otherwise designated. When used, a designation following the "G" designation identifies the office that will review the submittal for the Government. The following shall be submitted in accordance with Section 01330 SUBMITTAL PROCEDURES:

SD-03 Product Data

Tile Flooring; G, AE

Manufacturer's descriptive data and installation instructions including cleaning and maintenance instructions.

SD-04 Samples

Tile Flooring; G, AE
Wall Base; G, AE

Three samples of each indicated color and type of flooring and base. Sample size shall be minimum 2-1/2 x 4 inches.

SD-06 Test Reports

Moisture Test

Copies of test reports showing that representative product samples of the flooring proposed for use have been tested by an independent testing laboratory within the past three years or when formulation change occurred and conforms to the requirements specified.

## 1.4 DELIVERY AND STORAGE

Materials shall be delivered to the building site in original unopened containers bearing the manufacturer's name, project identification, and handling instructions. Materials shall be stored in a clean dry area with temperature maintained above 70 degrees F for 2 days prior to installation, and shall be stacked according to manufacturer's recommendations. Materials shall be protected from the direct flow of heat from hot-air registers, radiators and other heating fixtures and appliances.

## 1.5 ENVIRONMENTAL REQUIREMENTS

a. Areas to receive resilient flooring shall be maintained at a temperature above 70 degrees F and below 100 degrees F for 2 days before application, during application and 2 days after application . A minimum temperature of 55 degrees F shall be maintained thereafter.

b. Provide adequate ventilation to remove moisture from area and to comply with regulations limiting concentrations of hazardous vapors.

## 1.6 SCHEDULING

Resilient flooring application shall be scheduled after the completion of other work which would damage the finished surface of the flooring.

## 1.7 WARRANTY

Manufacturer's standard performance guarantees or warranties that extend beyond a one year period shall be provided.

## 1.8 EXTRA MATERIALS

Extra flooring material of each color and pattern shall be furnished at the rate of10 tiles for each 500 tiles installed. Extra materials shall be from the same lot as those installed. Extra base material composed of 20 linear feet of each color shall be furnished.

# PART 2 PRODUCTS

## 2.1 TILE FLOORING

### 2.1.1 Vinyl-Composition Tile

Vinyl-composition tile shall conform to ASTM F 1066, Class 2,(through pattern tile), Composition 1, asbestos-free, and shall be 12 inches square and 1/8 inch thick. Tile shall have the color and pattern uniformly

distributed throughout the thickness of the tile. Flooring in any one continuous area shall be from the same lot and shall have the same shade and pattern.

2.2 WALL BASE

Base shall be manufacturers standard rubber , coved style (installed with resilient flooring) . Base shall be 4 inches high and a minimum 1/8 inch thick, in color as indicated on drawings, and in matte finsih. Job Formed corners shall be furnished.

2.3 POLISH/FINISH

Polish shall conform to ASTM D 4078. Use flooring manufacturer's standard high-solids finish for shine without buffing; non-flamable; compatible with factory-applied finish; may be buffed or burnished for maximum gloss.

2.4 CAULKING AND SEALANTS

Caulking and sealants shall be in accordance with Section 07900A JOINT SEALING.

2.5 MANUFACTURER'S COLOR AND TEXTURE

Color and texture shall be as indicated on drawings.

2.6 ADHESIVE

Adhesive for flooring and wall base shall be as recommended by the flooring manufacturer.

PART 3 EXECUTION

3.1 EXAMINATION/VERIFICATION OF CONDITIONS

The Contractor shall examine and verify that site conditions are in agreement with the design package and shall report all conditions that will prevent a proper installation. The Contractor shall not take any corrective action without written permission from the Government.

3.2 SURFACE PREPARATION

Flooring shall be in a smooth, true, level plane, except where indicated as sloped. Before any work under this section is begun, all defects such as rough or scaling concrete, low spots, high spots, and uneven surfaces shall have been corrected, and all damaged portions of concrete slabs shall have been repaired as recommended by the flooring manufacturer. Concrete curing compounds, other than the type that does not adversely affect adhesion, shall be entirely removed from the slabs. Paint, varnish, oils, release agents, sealers, waxers, and adhesives shall be removed, as recommended by the flooring manufacturer.

3.3 MOISTURE TEST

The suitability of the concrete subfloor for receiving the resilient flooring with regard to moisture content shall be determined by a moisture test as recommended by the flooring manufacturer .

## 3.4 GENERAL APPLICATION REQUIREMENTS

To avoid damage, install flooring after other work in same area has been completed. Apply flooring and accessories in accordance with manufacturer's directions, using experienced workers. Detailed requirements follow:

a. Adhesives: Do not allow smoking, open flames or other sources of ignition in area where solvent-containing adhesives are being used or spread.

b. Flooring: Start in center of room or area, and work toward edges. Keep tile lines and joints square, symmetrical, tight, and even. Keep each floor in true, level plane, except where slope is indicated. Vary width of edge tiles as necessary to maintain full-size tiles in field, but no edge tile shall be less than one-half full size.

c. Cutting: Cut flooring edges and scribe to walls and partitions after field flooring has been applied.

## 3.5 INSTALLATION OF VINYL-COMPOSITION TILE

Tile flooring shall be installed with adhesive in accordance with the manufacturer's installation instructions. Tile lines and joints shall be kept square, symmetrical, tight, and even. Edge width shall vary as necessary to maintain full-size tiles in the field, but no edge tile shall be less than one-half the field tile size, except where irregular shaped rooms make it impossible. Flooring shall be cut to, and fitted around, all permanent fixtures, built-in furniture and cabinets, pipes, and outlets. Edge tile shall be cut, fitted, and scribed to walls and partitions after field flooring has been applied.

## 3.6 INSTALLATION OF WALL BASE

Wall base shall be installed with adhesive in accordance with the manufacturer's written instructions. Base joints shall be tight and base shall be even with adjacent resilient flooring. Voids along the top edge of base at masonry walls shall be filled with caulk.

## 3.7 CLEANING

Immediately upon completion of installation of tile in a room or an area, flooring and adjacent surfaces shall be dry-cleaned to remove all surplus adhesive. No sooner than 5 days after installation, flooring shall be washed with a nonalkaline cleaning solution, rinsed thoroughly with clear cold water, and given two coats of polish in accordance with manufacturers written instructions.

## 3.8 PROTECTION

From the time of laying until acceptance, flooring shall be protected from damage as recommended by the flooring manufacturer. Flooring which becomes damaged, loose, broken, or curled shall be removed and replaced.

-- End of Section --

SECTION TABLE OF CONTENTS

DIVISION 09 - FINISHES

SECTION 09900

PAINTS AND COATINGS

**02/02**

PART 1 GENERAL

1.1 REFERENCES
1.2 SUBMITTALS
1.3 APPLICATOR'S QUALIFICATIONS
1.3.1 Contractor Qualification
1.4 QUALITY ASSURANCE
1.4.1 Field Samples and Tests
1.5 REGULATORY REQUIREMENTS
1.5.1 Environmental Protection
1.5.2 Lead Content
1.5.3 Chromate Content
1.5.4 Asbestos Content
1.5.5 Mercury Content
1.5.6 Silica
1.5.7 Human Carcinogens
1.6 PACKAGING, LABELING, AND STORAGE
1.7 SAFETY AND HEALTH
1.7.1 Safety Methods Used During Coating Application
1.7.2 Toxic Materials
1.8 ENVIRONMENTAL CONDITIONS
1.8.1 Coatings
1.9 COLOR SELECTION
1.10 LOCATION AND SURFACE TYPE TO BE PAINTED
1.10.1 Painting Included
1.10.1.1 Exterior Painting
1.10.1.2 Interior Painting
1.10.2 Painting Excluded
1.10.3 Mechanical and Electrical Painting

PART 2 PRODUCTS

2.1 MATERIALS

PART 3 EXECUTION

3.1 PROTECTION OF AREAS AND SPACES NOT TO BE PAINTED
3.2 SURFACE PREPARATION
3.3 PREPARATION OF METAL SURFACES
3.3.1 Ferrous Surfaces
3.3.2 Final Ferrous Surface Condition:
3.3.3 Galvanized Surfaces
3.3.4 Non-Ferrous Metallic Surfaces
3.4 PREPARATION OF CONCRETE, CEMENTITIOUS GYPSUM BOARD SURFACE
3.4.1 Concrete
3.4.2 Gypsum Board

3.5 APPLICATION
3.5.1 Coating Application
3.5.2 Mixing and Thinning of Paints
3.5.3 Coating Systems
3.6 COATING SYSTEMS FOR METAL
3.7 COATING SYSTEMS FOR CONCRETE AND CEMENTITIOUS SUBSTRATES
3.8 PIPING IDENTIFICATION
3.9 INSPECTION AND ACCEPTANCE
3.10 PAINT TABLES
3.10.1 EXTERIOR PAINT TABLES
3.10.2 INTERIOR PAINT TABLES

-- End of Section Table of Contents --

SECTION 09900

PAINTS AND COATINGS
**02/02**

PART 1 GENERAL

1.1 REFERENCES

The publications listed below form a part of this specification to the extent referenced. The publications are referred to within the text by the basic designation only.

AMERICAN CONFERENCE OF GOVERNMENTAL INDUSTRIAL HYGIENISTS (ACGIH)

| | |
|---|---|
| ACGIH Limit Values | (1991-1992) Threshold Limit Values (TLVs) for Chemical Substances and Physical Agents and Biological Exposure Indices (BEIs) |

AMERICAN SOCIETY FOR TESTING AND MATERIALS (ASTM)

| | |
|---|---|
| ASTM D 2092 | (1995) Preparation of Zinc-Coated (Galvanized) Steel Surfaces for Painting |
| ASTM D 4263 | (1983; R 1999) Indicating Moisture in Concrete by the Plastic Sheet Method |
| ASTM F 1869 | (1998) Measuring Moisture Vapor Emission Rate of Concrete Subfloor Using Anhydrous Calcium Chloride |

CODE OF FEDERAL REGULATIONS (CFR)

| | |
|---|---|
| 29 CFR 1910.1000 | Air Contaminants |

FEDERAL STANDARDS (FED-STD)

| | |
|---|---|
| FED-STD-313 | (Rev. C) Material Safety Data, Transportation Data and Disposal Data for Hazardous Materials Furnished to Government Activities |

MASTER PAINTERS INSTITUTE (MPI)

| | |
|---|---|
| MPI 4 | (2001) Interior/Exterior Latex Block Filler |
| MPI 23 | (2001) Surface Tolerant Metal Primer |
| MPI 50 | (2001) Interior Latex Primer Sealer |
| MPI 79 | (2001) Marine Alkyd Metal Primer |
| MPI 94 | (2001) Exterior Alkyd, Semi-Gloss |
| MPI 95 | (2001) Fast Drying Metal Primer |

| | |
|---|---|
| MPI 101 | (2001) Cold Curing Epoxy Primer |
| MPI 107 | (2001) Rust Inhibitive Primer (Water-Based) |
| MPI 110 | (2001) Interior/Exterior High Performance Acrylic |
| MPI 141 | (2001) High Performance Semigloss Latex, White and Tints - Gloss Level 5 |

U.S. DEPARTMENT OF DEFENSE (DOD)

| | |
|---|---|
| MIL-STD-101 | (Rev. B) Color Code for Pipelines and for Compressed Gas Cylinders |

SCIENTIFIC CERTIFICATION SYSTEMS (SCS)

| | |
|---|---|
| SCS SP01-01 | (2001) Environmentally Preferable Product Specification for Architectural and Anti-Corrosive Paints |

STEEL STRUCTURES PAINTING COUNCIL (SSPC)

| | |
|---|---|
| SSPC PA 1 | (2000) Shop, Field, and Maintenance Painting |
| SSPC Guide 3 | (1995) Safety in Paint Application |
| SSPC VIS 3 | (1993) Visual Standard for Power- and Hand-Tool Cleaned Steel (Standard Reference Photographs) |
| SSPC VIS 4 | (2001) Guide and Reference Photographs for Steel Surfaces Prepared by Waterjetting |
| SSPC SP 1 | (1982) Solvent Cleaning |
| SSPC SP 2 | (1995) Hand Tool Cleaning |
| SSPC SP 3 | (1995) Power Tool Cleaning |
| SSPC SP 7 | (1994) Brush-Off Blast Cleaning |
| SSPC SP 12 | (1995) Surface Preparation and Cleaning of Steel and Other Hard Materials by High-and Ultra high-Pressure Water Jetting Prior to Recoating |

## 1.2 SUBMITTALS

Government approval is required for submittals with a "G" designation; submittals not having a "G" designation are for information only or as otherwise designated. When used, a designation following the "G" designation identifies the office that will review the submittal for the Government. The following shall be submitted in accordance with Section 01330 SUBMITTAL PROCEDURES:

The current MPI, "Approved Product List" which lists paint by brand, label, product name and product code as of the date of contract award, will be used to determine compliance with the submittal requirements of this specification. The Contractor may choose to use a subsequent MPI "Approved Product List", however, only one list may be used for the entire contract and each coating system is to be from a single manufacturer. All coats on a particular substrate must be from a single manufacturer. No variation from the MPI Approved Products List is acceptable.

Samples of specified materials may be taken and tested for compliance with specification requirements.

In keeping with the intent of Executive Order 13101, "Greening the Government through Waste Prevention, Recycling, and Federal Acquisition", products certified by SCS as meeting SCS SP01-01 shall be given preferential consideration over registered products. Products that are registered shall be given preferential consideration over products not carrying any EPP designation.

SD-03 Product Data

Coating

Manufacturer's Technical Data Sheets

SD-04 Samples

Color; G, AO

Submit manufacturer's samples of paint colors. Cross reference color samples to color scheme as indicated.

SD-07 Certificates

Applicator's qualifications

SD-08 Manufacturer's Instructions

Application instructions

Mixing

Detailed mixing instructions, minimum and maximum application temperature and humidity, potlife, and curing and drying times between coats.

Manufacturer's Material Safety Data Sheets

Submit manufacturer's Material Safety Data Sheets for coatings, solvents, and other potentially hazardous materials, as defined in FED-STD-313.

SD-10 Operation and Maintenance Data

Coatings:

Preprinted cleaning and maintenance instructions for all coating systems shall be provided.

## 1.3 APPLICATOR'S QUALIFICATIONS

### 1.3.1 Contractor Qualification

Submit the name, address, telephone number, FAX number, and e-mail address of the contractor that will be performing all surface preparation and coating application. Submit evidence that key personnel have successfully performed surface preparation and application of coatings on a minimum of three similar projects within the past three years. List information by individual and include the following:

a. Name of individual and proposed position for this work.

b. Information about each previous assignment including:

Position or responsibility

Employer (if other than the Contractor)

Name of facility owner

Mailing address, telephone number, and telex number (if non-US) of facility owner

Name of individual in facility owner's organization who can be contacted as a reference

Location, size and description of structure

Dates work was carried out

Description of work carried out on structure

## 1.4 QUALITY ASSURANCE

### 1.4.1 Field Samples and Tests

The Contracting Officer may choose up to two coatings that have been delivered to the site to be tested at no cost to the Government. Take samples of each chosen product as specified in the paragraph "Sampling Procedures." Test each chosen product as specified in the paragraph "Testing Procedure." Products which do not conform, shall be removed from the job site and replaced with new products that confrom to the referenced specification. Testing of replacement products that failed initial testing shall be at no cost to the Government.

## 1.5 REGULATORY REQUIREMENTS

### 1.5.1 Environmental Protection

In addition to requirements specified elsewhere for environmental protection, provide coating materials that conform to the restrictions of the local Air Pollution Control District and regional jurisdiction. Notify Contracting Officer of any paint specified herein which fails to conform.

### 1.5.2 Lead Content

Do not use coatings having a lead content over 0.06 percent by weight of

nonvolatile content.

1.5.3 Chromate Content

Do not use coatings containing zinc-chromate or strontium-chromate.

1.5.4 Asbestos Content

Materials shall not contain asbestos.

1.5.5 Mercury Content

Materials shall not contain mercury or mercury compounds.

1.5.6 Silica

Abrasive blast media shall not contain free crystilline silica.

1.5.7 Human Carcinogens

Materials shall not contain ACGIH Limit Values and ACGIH Limit Values confirmed human carcinogens (A1) or suspected human carcinogens (A2).

1.6 PACKAGING, LABELING, AND STORAGE

Paints shall be in sealed containers that legibly show the contract specification number, designation name, formula or specification number, batch number, color, quantity, date of manufacture, manufacturer's formulation number, manufacturer's directions including any warnings and special precautions, and name and address of manufacturer. Pigmented paints shall be furnished in containers not larger than 5 gallons. Paints and thinners shall be stored in accordance with the manufacturer's written directions, and as a minimum, stored off the ground, under cover, with sufficient ventilation to prevent the buildup of flammable vapors, and at temperatures between 40 to 95 degrees F.

1.7 SAFETY AND HEALTH

Apply coating materials using safety methods and equipment in accordance with the following:

Work shall comply with applicable Federal, State, and local laws and regulations, and with the ACCIDENT PREVENTION PLAN, including the Activity Hazard Analysis as specified in Section 01525,"Safety Requirements" and in Appendix A of EM 385-1-1. The Activity Hazard Analysis shall include analyses of the potential impact of painting operations on painting personnel and on others involved in and adjacent to the work zone.

1.7.1 Safety Methods Used During Coating Application

Comply with the requirements of SSPC Guide 3.

1.7.2 Toxic Materials

To protect personnel from overexposure to toxic materials, conform to the most stringent guidance of:

a. The applicable manufacturer's Material Safety Data Sheets (MSDS) or local regulation.

b. 29 CFR 1910.1000.

c. ACGIH Limit Values, threshold limit values.

## 1.8 ENVIRONMENTAL CONDITIONS

### 1.8.1 Coatings

Do not apply coating when air or substrate conditions are:

a. Less than 5 degrees F above dew point;

b. Below 50 degrees F or over 95 degrees F, unless specifically pre-approved by the Contracting Officer and the product manufacturer. Under no circumstances shall application conditions exceed manufacturer recommendations.

## 1.9 COLOR SELECTION

Colors of finish coats shall be as indicated or specified. Where not indicated or specified, colors shall be selected by the Contracting Officer. Manufacturers' names and color identification are used for the purpose of color identification only. Named products are acceptable for use only if they conform to specified requirements. Products of other manufacturers are acceptable if the colors approximate colors indicated and the product conforms to specified requirements.

Tint each coat progressively darker to enable confirmation of the number of coats.

Color of wall coating systems shall be as indicated on drawings .

## 1.10 LOCATION AND SURFACE TYPE TO BE PAINTED

### 1.10.1 Painting Included

Where a space or surface is indicated to be painted, include the following unless indicated otherwise.

a. Surfaces behind portable objects and surface mounted articles readily detachable by removal of fasteners, such as screws and bolts.

b. New factory finished surfaces that require identification or color coding and factory finished surfaces that are damaged during performance of the work.

#### 1.10.1.1 Exterior Painting

Includes new surfaces of the building and appurtenances as indicated. Also included are existing coated surfaces made bare by cleaning operations.

#### 1.10.1.2 Interior Painting

Includes new surfaces of the building and appurtenances as indicated and existing coated surfaces made bare by cleaning operations. Where a space or surface is indicated to be painted, include the following items, unless indicated otherwise.

a. Exposed columns, girders, beams, joists, and metal deck; and

b. Other contiguous surfaces.

1.10.2 Painting Excluded

Do not paint the following unless indicated otherwise.

a. Surfaces concealed and made inaccessible by panelboards, fixed ductwork, machinery, and equipment fixed in place.

b. Surfaces in concealed spaces. Concealed spaces are defined as enclosed spaces above suspended ceilings, furred spaces, attic spaces, crawl spaces, elevator shafts and chases.

c. Steel to be embedded in concrete.

d. Copper, stainless steel, aluminum, brass, and lead except existing coated surfaces.

e. Hardware, fittings, and other factory finished items.

1.10.3 Mechanical and Electrical Painting

Includes field coating of interior and exterior new surfaces.

a. Where a space or surface is indicated to be painted, include the following items unless indicated otherwise.

(1) Exposed piping, conduit, and ductwork;

(2) Supports, hangers, air grilles, and registers;

(3) Miscellaneous metalwork and insulation coverings.

PART 2 PRODUCTS

2.1 MATERIALS

Conform to the coating specifications and standards referenced in PART 3. Submit manufacturer's technical data sheets for specified coatings and solvents.

PART 3 EXECUTION

3.1 PROTECTION OF AREAS AND SPACES NOT TO BE PAINTED

Prior to surface preparation and coating applications, remove, mask, or otherwise protect, hardware, hardware accessories, machined surfaces, radiator covers, plates, lighting fixtures, public and private property, and other such items not to be coated that are in contact with surfaces to be coated. Following completion of painting, workmen skilled in the trades involved shall reinstall removed items. Restore surfaces contaminated by coating materials, to original condition and repair damaged items.

## 3.2 SURFACE PREPARATION

Remove dirt, splinters, loose particles, grease, oil, and other foreign matter and substances deleterious to coating performance as specified for each substrate before application of paint or surface treatments. Oil and grease shall be removed prior to mechanical cleaning. Cleaning shall be programmed so that dust and other contaminants will not fall on wet, newly painted surfaces. Exposed ferrous metals such as nail heads on or in contact with surfaces to be painted with water-thinned paints, shall be spot-primmed with a suitable corrosion-inhibitive primer capable of preventing flash rusting and compatible with the coating specified for the adjacent areas.

## 3.3 PREPARATION OF METAL SURFACES

### 3.3.1 Ferrous Surfaces

a. Ferrous Surfaces including Shop-coated Surfaces and Small Areas That Contain Rust, Mill Scale and Other Foreign Substances: Solvent clean or detergent wash in accordance with SSPC SP 1 to remove oil and grease. Where shop coat is missing or damaged, clean according to SSPC SP 2 or SSPC SP 3. Brush-off blast remaining surface in accordance with SSPC SP 7; Water jetting to SSPC SP 12 WJ-4 may be used to remove loose coating and other loose materials. Use inhibitor as recommended by coating manufacturer to prevent premature rusting. Shop-coated ferrous surfaces shall be protected from corrosion by treating and touching up corroded areas immediately upon detection.

### 3.3.2 Final Ferrous Surface Condition:

For tool cleaned surfaces, the requirements are stated in SSPC SP 2 and SSPC SP 3. As a visual reference, cleaned surfaces shall be similar to photographs in SSPC VIS 3.

For waterjet cleaned surfaces, the requirements are stated in SSPC SP 12. As a visual reference, cleaned surfaces shall be similar to photographs in SSPC VIS 4.

### 3.3.3 Galvanized Surfaces

a. New Galvanized Surfaces With Only Dirt and Zinc Oxidation Products: Clean with solvent, steam, or non-alkaline detergent solution in accordance with SSPC SP 1. If the galvanized metal has been passivated or stabilized, the coating shall be completely removed by brush-off abrasive blast. New galvanized steel to be coated shall not be "passivated" or "stabilized" If the absence of hexavalent stain inhibitors is not documented, test as described in ASTM D 2092, Appendix X2, and remove by one of the methods described therein.

### 3.3.4 Non-Ferrous Metallic Surfaces

Aluminum and aluminum-alloy, lead, copper, and other nonferrous metal surfaces.

a. Surface Cleaning: Solvent clean in accordance with SSPC SP 1 and wash with mild non-alkaline detergent to remove dirt and water soluble contaminants.

## 3.4 PREPARATION OF CONCRETE, CEMENTITIOUS GYPSUM BOARD SURFACE

### 3.4.1 Concrete

a. Curing: Concrete and masonry surfaces shall be allowed to cure at least 30 days before painting, except concrete slab on grade, which shall be allowed to cure 90 days before painting.

b. Surface Cleaning: Remove the following deleterious substances.

(1) Dirt, Chalking, Grease, and Oil: Wash new surfaces with a solution composed of 1/2 cup trisodium phosphate, 1/4 cuphousehold detergent, and 4 quarts of warm water. Then rinse thoroughly with fresh water. For large areas, water blasting may be used.

(2) Fungus and Mold: Wash new surfaces with a solution composed of 1/2 cup trisodium phosphate, 1/4 cup household detergent, 1 quart 5 percent sodium hypochlorite solution and 3 quarts of warm water. Rinse thoroughly with fresh water.

(3) Paint and Loose Particles: Remove by wire brushing.

(4) Efflorescence: Remove by scraping or wire brushing followed by washing with a 5 to 10 percent by weight aqueous solution of hydrochloric (muriatic) acid. Do not allow acid to remain on the surface for more than five minutes before rinsing with fresh water. Do not acid clean more than 4 square feet of surface, per workman, at one time.

c. Cosmetic Repair of Minor Defects: Repair or fill mortar joints and minor defects, including but not limited to spalls, in accordance with manufacturer's recommendations and prior to coating application.

d. Allowable Moisture Content: Latex coatings may be applied to damp surfaces, but not to surfaces with droplets of water. Do not apply epoxies to damp vertical surfaces as determined by ASTM D 4263 or horizontal surfaces that exceed 3 lbs of moisture per 1000 square feet in 24 hours as determined by ASTM F 1869. In all cases follow manufacturers recommendations. Allow surfaces to cure a minimum of 30 days before painting.

### 3.4.2 Gypsum Board

a. Surface Cleaning: Gypsum board shall be dry. Remove loose dirt and dust by brushing with a soft brush, rubbing with a dry cloth, or vacuum-cleaning prior to application of the first coat material. A damp cloth or sponge may be used if paint will be water-based.

b. Repair of Minor Defects: Prior to painting, repair joints, cracks, holes, surface irregularities, and other minor defects with patching plaster or spackling compound and sand smooth.

c. Allowable Moisture Content: Latex coatings may be applied to damp surfaces, but not surfaces with droplets of water. Do not apply epoxies to damp surfaces as determined by ASTM D 4263.

## 3.5 APPLICATION

### 3.5.1 Coating Application

Painting practices shall comply with applicable federal, state and local laws enacted to insure compliance with Federal Clean Air Standards. Apply coating materials in accordance with SSPC PA 1. SSPC PA 1 methods are applicable to all substrates, except as modified herein.

At the time of application, paint shall show no signs of deterioration. Uniform suspension of pigments shall be maintained during application.

Unless otherwise specified or recommended by the paint manufacturer, paint may be applied by brush, roller, or spray. Rollers for applying paints and enamels shall be of a type designed for the coating to be applied and the surface to be coated.

Paints, except water-thinned types, shall be applied only to surfaces that are completely free of moisture as determined by sight or touch.

Thoroughly work coating materials into joints, crevices, and open spaces. Special attention shall be given to insure that all edges, corners, crevices, welds, and rivets receive a film thickness equal to that of adjacent painted surfaces.

Each coat of paint shall be applied so dry film shall be of uniform thickness and free from runs, drops, ridges, waves, pinholes or other voids, laps, brush marks, and variations in color, texture, and finish. Hiding shall be complete.

Touch up damaged coatings before applying subsequent coats. Interior areas shall be broom clean and dust free before and during the application of coating material.

### 3.5.2 Mixing and Thinning of Paints

Reduce paints to proper consistency by adding fresh paint, except when thinning is mandatory to suit surface, temperature, weather conditions, application methods, or for the type of paint being used. Obtain written permission from the Contracting Officer to use thinners. The written permission shall include quantities and types of thinners to use.

When thinning is allowed, paints shall be thinned immediately prior to application with not more than 1 pint of suitable thinner per gallon. The use of thinner shall not relieve the Contractor from obtaining complete hiding, full film thickness, or required gloss. Thinning shall not cause the paint to exceed limits on volatile organic compounds. Paints of different manufacturers shall not be mixed.

### 3.5.3 Coating Systems

a. Systems by Substrates: Apply coatings that conform to the respective specifications listed in the following Tables:

Table

Division 5. Exterior Metal, Ferrous and Non-Ferrous Paint Table

Division 3. Interior Concrete Paint Table
Division 4. Interior Concrete Masonry Units Paint Table
Division 5. Interior Metal, Ferrous and Non-Ferrous Paint Table
Division 9: Interior Plaster, Gypsum Board, Textured Surfaces Paint Table

b. Minimum Dry Film Thickness (DFT): Apply paints, primers, varnishes, enamels, undercoats, and other coatings to a minimum dry film thickness of 1.5 mil each coat unless specified otherwise in the Tables. Coating thickness where specified, refers to the minimum dry film thickness.

c. Coatings for Surfaces Not Specified Otherwise: Coat surfaces which have not been specified, the same as surfaces having similar conditions of exposure.

d. Existing Surfaces Damaged During Performance of the Work, Including New Patches In Existing Surfaces: Coat surfaces with the following:

(1) One coat of primer.

(2) One coat of undercoat or intermediate coat.

(3) One topcoat to match adjacent surfaces.

e. Existing Coated Surfaces To Be Painted: Apply coatings conforming to the respective specifications listed in the Tables herein, except that pretreatments, sealers and fillers need not be provided on surfaces where existing coatings are soundly adhered and in good condition. Do not omit undercoats or primers.

## 3.6 COATING SYSTEMS FOR METAL

Apply coatings of Tables in Division 5 for Exterior and Interior.

a. Apply specified ferrous metal primer on the same day that surface is cleaned, to surfaces that meet all specified surface preparation requirements at time of application.

b. Inaccessible Surfaces: Prior to erection, use one coat of specified primer on metal surfaces that will be inaccessible after erection.

c. Shop-primed Surfaces: Touch up exposed substrates and damaged coatings to protect from rusting prior to applying field primer.

d. Surface Previously Coated with Epoxy or Urethane: Apply MPI 101, 1.5 mils DFT immediately prior to application of epoxy or urethane coatings.

e. Pipes and Tubing: The semitransparent film applied to some pipes and tubing at the mill is not to be considered a shop coat, but shall be overcoated with the specified ferrous-metal primer prior to application of finish coats.

f. Exposed Nails, Screws, Fasteners, and Miscellaneous Ferrous Surfaces. On surfaces to be coated with water thinned coatings, spot prime exposed nails and other ferrous metal with latex primer

MPI 107.

3.7 COATING SYSTEMS FOR CONCRETE AND CEMENTITIOUS SUBSTRATES

Apply coatings of Tables in Division 3, 4 and 9 for Exterior and Interior.

3.8 PIPING IDENTIFICATION

Piping Identification, Including Surfaces In Concealed Spaces: Provide in accordance with MIL-STD-101. Place stenciling in clearly visible locations. On piping not covered by MIL-STD-101, stencil approved names or code letters, in letters a minimum of 1/2 inch high for piping and a minimum of 2 inches high elsewhere. Stencil arrow-shaped markings on piping to indicate direction of flow using black stencil paint.

3.9 INSPECTION AND ACCEPTANCE

In addition to meeting previously specified requirements, demonstrate mobility of moving components, including swinging and sliding doors, cabinets, and windows with operable sash, for inspection by the Contracting Officer. Perform this demonstration after appropriate curing and drying times of coatings have elapsed and prior to invoicing for final payment.

3.10 PAINT TABLES

All DFT's are minimum values.

3.10.1 EXTERIOR PAINT TABLES

DIVISION 5: EXTERIOR METAL, FERROUS AND NON-FERROUS PAINT TABLE

STEEL / FERROUS SURFACES

A. New Steel that has been hand or power tool cleaned to SSPC SP 2 or SSPC SP 3

1. Alkyd
New; MPI EXT 5.1Q-G5 (Semigloss) Existing; MPI REX 5.1D-G5

| Primer: | Intermediate: | Topcoat: |
|---|---|---|
| MPI 23 | MPI 94 | MPI 94 |

System DFT: 5.25 mils

EXTERIOR GALVANIZED SURFACES

B. New Galvanized surfaces:

1. Epoxy Primer / Waterborne Light Industrial Coating
MPI EXT 5.3K-G5 (Semigloss)

| Primer: | Intermediate: | Topcoat: |
|---|---|---|
| MPI 101 | MPI 110-G5 | MPI 110-G5 |

System DFT: 5 mils

C. Aluminum, aluminum alloy and other miscellaneous non-ferrous metal items
not otherwise specified except hot metal surfaces, roof surfaces, and new prefinished equipment. Match surrounding finish:

1. MPI EXT 5.4F-G5 (Semigloss)

| Primer: | Intermediate: | Topcoat: |
|---|---|---|

EXTERIOR GALVANIZED SURFACES

| | | |
|---|---|---|
| MPI 95 | MPI 94 | MPI 94 |

System DFT: 5 mils

3.10.2 INTERIOR PAINT TABLES

DIVISION 3: INTERIOR CONCRETE PAINT TABLE

A. New and uncoated existing Concrete, vertical surfaces, not specified otherwise:

1. High Performance Architectural Latex
New; MPI INT 3.1C-G5 (Semigloss) / Existing; MPI RIN 3.1J-G5 (Semigloss)

| Primer: | Intermediate: | Topcoat: |
|---|---|---|
| MPI 50 | MPI 141 | MPI 141 |

System DFT: 4 mils

DIVISION 4: INTERIOR CONCRETE MASONRY UNITS PAINT TABLE

A. New Concrete masonry:

1. High Performance Architectural Latex
MPI INT 4.2D-G5 (Semigloss)

| Filler | Primer: | Intermediate: | Topcoat: |
|---|---|---|---|
| MPI 4 | N/A | MPI 141 | MPI 141 |

System DFT: 11 mils

Fill all holes in masonry surface

DIVISION 5: INTERIOR METAL, FERROUS AND NON-FERROUS PAINT TABLE

INTERIOR STEEL / FERROUS SURFACES

A. Metal, Mechanical,Electrical,Surfaces adjacent to painted surfaces (Match surrounding finish),and miscellaneous metal items not otherwise specified except floors, hot metal surfaces, and new prefinished equipment:

1. High Performance Architectural Latex
MPI INT 5.1R-G5 (Semigloss)

| Primer: | Intermediate: | Topcoat: |
|---|---|---|
| MPI 79 | MPI 141 | MPI 141 |

System DFT: 5 mils

DIVISION 9: INTERIOR PLASTER, GYPSUM BOARD, PAINT TABLE

A. New Wallboard not otherwise specified:

1. High Performance Architectural Latex - High Traffic Areas

DIVISION 9: INTERIOR PLASTER, GYPSUM BOARD, PAINT TABLE

New; MPI INT 9.2B-G5 (Semigloss) / Existing; MPI RIN 9.2B-G5 (Semigloss)

| Primer: | Intermediate: | Topcoat: |
|---|---|---|
| MPI 50 | MPI 141 | MPI 141 |

System DFT: 4 mils

-- End of Section --

SECTION TABLE OF CONTENTS

DIVISION 09 - FINISHES

SECTION 09971

EXTERIOR COATING OF STEEL STRUCTURES

**09/01**

PART 1 GENERAL

1.1 REFERENCES
1.2 DEFINITIONS
1.3 SUBMITTALS
1.4 QUALITY ASSURANCE
1.4.1 Test Reports
1.4.1.1 Joint Sealant Qualification Test Reports
1.4.1.2 Coatings Qualification Test Reports
1.4.1.3 Recycled Metallic Abrasive Field Test Reports (Daily and Weekly)
1.4.2 Certificates
1.4.2.1 Work Plan
1.4.2.2 Qualifications of Certified Industrial Hygienist (CIH)
1.4.2.3 Qualifications of Testing Laboratory for Coatings
1.4.2.4 Qualifications of Testing Laboratory for Abrasive
1.4.2.5 Qualifications of Coating Contractors
1.4.2.6 Qualifications of Coating Manufacturer's Representative
1.4.2.7 Coating Materials
1.4.2.8 Coating System Component Compatibility
1.4.2.9 Non-Metallic Abrasive
1.4.2.10 Metallic Abrasive
1.4.3 Product Data
1.4.3.1 Coating System Instructions
1.5 DELIVERY AND STORAGE
1.6 COATING HAZARDS
1.7 JOB SITE REFERENCES
1.8 PRE-APPLICATION MEETING

PART 2 PRODUCTS

2.1 COATING SYSTEM
2.1.1 Zinc-Rich Epoxy Primer Coat
2.1.2 Epoxy Intermediate Coat
2.1.3 Polyurethane Topcoat
2.2 COATING SAMPLE COLLECTION AND SHIPPING KIT
2.3 ABRASIVE SAMPLE COLLECTION AND SHIPPING KIT
2.4 SOLUBLE SALTS TEST KITS
2.4.1 Test Kit for Measuring Chlorides on Steel Surfaces
2.5 ABRASIVE
2.5.1 Non-metallic Abrasive
2.5.2 Metallic Abrasive
2.5.2.1 New and Remanufactured Steel Grit
2.5.2.2 Recycled Steel Grit

PART 3 EXECUTION

3.1 COATING AND ABRASIVE SAMPLE COLLECTION AND TESTING
3.1.1 Coating Sample Collection
3.1.2 Abrasive Sample Collection
3.1.3 Coating Sample Test Reports
3.1.4 Abrasive Sample Test Reports
3.2 SURFACES TO BE COATED
3.3 LIGHTING
3.4 SURFACE PREPARATION
3.4.1 Abrasive Blasting Equipment
3.4.2 Surface Standard
3.4.3 Pre-Preparation Testing for Surface Contamination
3.4.3.1 Pre-Preparation Testing for Oil and Grease Contamination
3.4.3.2 Pre-Preparation Testing for Soluble Salts Contamination
3.4.4 Abrasive Blasting
3.4.5 Disposal of Used Abrasive
3.4.6 Pre-Application Testing For Surface Contamination
3.4.6.1 Pre-Application Testing for Oil and Grease Contamination
3.4.6.2 Pre-Application Testing for Soluble Salts Contamination
3.4.6.3 Pre-Application Testing for Surface Cleanliness
3.5 MIXING AND APPLICATION OF SEALANT AND COATING SYSTEM
3.5.1 Preparation of Sealant and Coating Materials for Application
3.5.1.1 Mixing Sealant, Primer and Intermediate Coat Materials
3.5.1.2 Mixing Topcoat Material
3.5.1.3 Pot Life
3.5.1.4 Application Conditions and Recoat Windows
3.5.2 Application of Coating System
3.5.2.1 Application of Primer
3.5.2.2 Application of Stripe Coat
3.5.2.3 Application of Intermediate Coat
3.5.2.4 Application of Topcoat
3.5.2.5 Procedure for Holiday and Spot Repairs of Newly Applied Coating
3.5.2.6 Structure Occupancy After Coating Application
3.6 FIELD TESTS AND INSPECTION
3.6.1 Coating Inspector
3.6.2 Field Inspection
3.6.2.1 Inspection Requirements
3.6.2.2 Daily Inspection Reports
3.6.2.3 Inspection Logbook
3.6.2.4 Inspection Equipment
3.6.3 Hold Points for Quality Control Inspections
3.7 FINAL CLEANUP

-- End of Section Table of Contents --

SECTION 09971

EXTERIOR COATING OF STEEL STRUCTURES
**09/01**

PART 1 GENERAL

Prepare surfaces and coat all new or modified exterior portions of the two (2) operating tanks, exterior railing and stairs. Do not coat any aluminum or stainless exterior items. Contractor shall protect all aluminum, API name plates, galvanized and stainless steel items from overspray. The four (4) bulk storage tanks will require repair coatings where the existing coating is damaged from installation of tank level switch nozzles or any inadvertent actions. In addition, the contractor shall paint the exterior surfaces of the pipe casing sleeves at the tank farm dike walls. Pipe casing sleeves are sized to accomodate 8-inch, 10-inch and 16-inch fuel piping.

Repairs to existing paint shall be in accordance with the requirements in the Procedure for Holiday and Spot Repairs of Newly Applied Coating, paragraph 3.5.2.5.

1.1 REFERENCES

The following publications of the issues listed below, but referred to thereafter by basic designation only, form a part of this specification to the extent indicated by the references thereto:

AMERICAN SOCIETY FOR TESTING AND MATERIALS (ASTM)

| | |
|---|---|
| ASTM D 1200 | (1999) Standard Test Method for Viscosity by Ford Viscosity Cup |
| ASTM D 3276 | (1996) Standard Guide for Painting Inspectors (Metal Substrates) |
| ASTM D 3925 | (1991) Sampling Liquid Paints and Related Pigmented Coatings |
| ASTM D 4285 | (1999) Indicating Oil or Water in Compressed Air |
| ASTM D 4417 | (1993) Field Measurement of Surface Profile of Blast Cleaned Steel |

U.S. NATIONAL ARCHIVES AND RECORDS ADMINISTRATION (NARA)

| | |
|---|---|
| 29 CFR 1910.134 | Respiratory Protection |
| 29 CFR 1910.1000 | Air Contaminants |
| 29 CFR 1926.59 | Hazard Communication |

U.S. GENERAL SERVICES ADMINISTRATION (GSA)

| | |
|---|---|
| FED-STD-595A | Colors Used in Government Procurement |

U.S. DEPARTMENT OF DEFENSE (DOD)

| | |
|---|---|
| MIL-A-22262 | (Rev. B) Abrasive Blasting Media Ship Hull Blast Cleaning |
| MIL-DTL-24441 | (Rev. C; Supp. 1) Paint, Epoxy-Polyamide |
| MIL-DTL-24441/19 | (Rev. B) Paint, Epoxy-Polyamide, Zinc Primer, Formula 159, Type III |
| MIL-DTL-24441/31 | (Rev. A) Paint, Epoxy-Polyamide, White, Formula 152, Type IV |
| MIL-PRF-85285 | (Rev. C) Coating: Polyurethane, High-Solids |

THE SOCIETY FOR PROTECTIVE COATINGS (SSPC)

| | |
|---|---|
| SSPC AB 2 | (1999) Cleanliness of Recycled Ferrous Metallic Abrasives |
| SSPC AB 3 | (1997) Newly Manufactured or Re-Manufactured Steel Abrasives |
| SSPC Guide to VIS 1 | (1989) Guide to Visual Standard for Abrasive Blast Cleaned Steel |
| SSPC VIS 1 | (1989) Visual Standard for Abrasive Blast Cleaned Steel (Standard Reference Photographs) |
| SSPC SP COM | (2000) Surface Preparation Commentary |
| SSPC SP 1 | (1982) Solvent Cleaning |
| SSPC SP 7 | (1994) Brush-Off Blast Cleaning |
| SSPC SP 10 | (1994) Near-White Blast Cleaning |
| SSPC PA 1 | (2000) Shop, Field, and Maintenance Painting |
| SSPC PA 2 | (1997) Measurement of Dry Paint Thickness with Magnetic Gages |
| SSPC Guide 12 | (1998) Guide for Illumination of Industrial Painting Projects |
| SSPC QP 1 | (1998) Evaluating Qualifications of Painting Contractors (Field Application to Complex Industrial Structures) |

ENGINEERING MANUAL

## 1.2 DEFINITIONS

Definitions are provided throughout this Section, generally in the Article where used, and denoted by capital letters.

## 1.3 SUBMITTALS

Submit the following in accordance with Section 01330, "Submittal Procedures."

SD-04 Coating Colors

Top Coat Color Sample; G-AO

Provide top coat color sample to Contracting Officer.

SD-06 Test Reports

Joint Sealant Qualification Test Reports

Coatings Qualification Test Reports; G-AO

Coating Sample Test Reports; G-AO

Abrasive Sample Test Reports; G-AO

Daily Inspection Reports

Recycled Metallic Abrasive Field Test Reports (Daily and Weekly); G -AO

SD-07 Certificates

Work Plan; G-AO

Qualifications of Certified Industrial Hygienist (CIH); G-AO

Qualifications of Testing Laboratory for Coatings; G-AO

Qualifications of Testing Laboratory for Abrasive; G-AO

Qualifications of Coating Contractors; G-AO
Qualifications of Coating Manufacturer's Representative; G-AO
Coating Materials

Coating System Component Compatibility; G-AO

Non-metallic Abrasive

Metallic Abrasive

SD-08 Manufacturer's Instructions

Coating System Instructions

SD-11 Closeout Submittals

Disposal of Used Abrasive; G-AO

Inspection Logbook

1.4 QUALITY ASSURANCE

1.4.1 Test Reports

1.4.1.1 Joint Sealant Qualification Test Reports

Not required.

1.4.1.2 Coatings Qualification Test Reports

Submit test results from independent laboratory of representative samples of each coating material. U.S. Department of Defense laboratories are considered to be independent laboratories for purposes of compliance with "QUALIFICATION INSPECTION" requirements herein. Samples must have been tested within the last three years. Submit results for epoxy materials as required in article entitled "QUALIFICATION INSPECTION" of MIL-DTL-24441, and as revised by article entitled "Coating System" herein. Submit results for polyurethane materials as required in article entitled "QUALIFICATION INSPECTION" of MIL-PRF-85285, and as revised by article entitled "Coating System" herein. Note that requirement for "QUALIFICATION INSPECTION" is a pre-qualification requirement, and involves the same testing required for listing in the Qualified Products List of the respective material. See appropriate Military Specification for specific test requirements.

1.4.1.3 Recycled Metallic Abrasive Field Test Reports (Daily and Weekly)

Submit test results from independent laboratory of daily and weekly Quality Control testing required by SSPC AB 2.

1.4.2 Certificates

1.4.2.1 Work Plan

Submit a written plan describing in detail all phases of coating operations. Address work sequencing, surface preparation, coating application, recoat and cure time projections, as well as how each step will be controlled, tested, and evaluated. Describe process of determining the existing surface profile under paint, and procedures for ensuring that the profile is not increased beyond the maximum profile specified herein. Describe equipment and methods used to measure and monitor weather conditions, including but not limited to temperature, relative humidity, and dew point. Provide detailed procedures, including manufacturer's instructions, for repairing defects in the coating film such as runs, drips, sags, holidays, overspray, etc. Address safety measures, work scheduling around weather, and record keeping. See Section 01110 for Accident Prevention Plan and Activity Hazard Analysis requirements. The Certified Industrial Hygienist shall review and approve all portions of these plans pertaining to painting activities. Provide a signature page with health and safety documents, indicating the Certified Industrial Hygienist's approval of the work procedures and equipment for painting tasks.

1.4.2.2 Qualifications of Certified Industrial Hygienist (CIH)

Submit name, address, telephone number, FAX number, and e-mail address of the independent third party CIH. Submit documentation that hygienist is certified by the American Board of Industrial Hygiene in comprehensive practice, including certification number and date of certification/recertification. Provide evidence of experience with hazards involved in industrial coating application work.

1.4.2.3 Qualifications of Testing Laboratory for Coatings

Submit name, address, telephone number, FAX number, and e-mail address of the independent third party laboratory selected to perform testing of coating samples for compliance with specification requirements. Submit documentation that laboratory is regularly engaged in testing of paint samples for conformance with specifications, and that persons performing analyses are qualified.

1.4.2.4 Qualifications of Testing Laboratory for Abrasive

Submit name, address, telephone number, FAX number, and e-mail address of the independent third party laboratory selected to perform testing of abrasive for compliance with specification requirements. Submit documentation that laboratory has experience in testing samples of abrasive for conformance with specifications, and that persons performing analyses are qualified.

1.4.2.5 Qualifications of Coating Contractors

All contractors and subcontractors that perform surface preparation or coating application shall be certified by the Society for Protective Coatings (formerly Steel Structures Painting Council) (SSPC) to the requirements of SSPC QP 1 prior to contract award, and shall remain certified while accomplishing any surface preparation or coating application. The painting contractors and painting subcontractors must remain so certified for the duration of the project. If a contractor's or subcontractor's certification expires, the firm will not be allowed to perform any work until the certification is reissued. Requests for extension of time for any delay to the completion of the project due to an inactive certification will not be considered and liquidated damages will apply. Notify the Contracting Officer of any change in contractor certification status.

Submit the name, address, telephone number, FAX number, and e-mail address of the contractor that will be performing all surface preparation and coating application. Submit evidence that key personnel have successfully performed surface preparation and application of coatings on industrial steel structures on a minimum of three separate projects within the past three years. List information by individual and include the following:

a. Name of individual and proposed position for this work.

b. Information about each previous assignment including:

Position or responsibility
Employer (if other than the Contractor)
Name of facility owner
Mailing address, telephone number, and telex number (if non-US) of facility owner

Name of individual in facility owner's organization who can be contacted as a reference
Location, size and description of structure
Dates work was carried out
Description of work carried out on structure

1.4.2.6 Qualifications of Coating Manufacturer's Representative

Evidence of experience and training of the Coating Manufacturer’s Representative(s), including name, phone number and address, a statement from the coating manufacturer certifying that the representative has successfully completed all of the manufacturer’s training for material storage, mixing, application, and testing, has been directly involved in evaluation and application of industrial coatings for not less than 10 steel structures within the last 5 years, and is not an employee of the Contractor. The manufacturer's representative shall advise on surface preparation, inspections, surface repair materials and methods, material handling, batching and mixing, application, curing, and testing.

1.4.2.7 Coating Materials

Provide manufacturer's certification of conformance to contract requirements.

1.4.2.8 Coating System Component Compatibility

Provide certification from each manufacturer of components of the coating system, epoxy primer, epoxy intermediate, and polyurethane topcoat, that the supplied coating material is suitable for use in the specified coating system. Each manufacturer shall identify the specific products, including manufacturer's name, which their product may be used with. The certification shall provide the name of the manufacturer that will provide technical support for the entire system. When all coating materials are manufactured by one manufacturer, this certification is not required.

1.4.2.9 Non-Metallic Abrasive

Provide manufacturer's certification that the materials meet MIL-A-22262 Abrasive Blasting Media Ship Hull Blast Cleaning.

1.4.2.10 Metallic Abrasive

Provide manufacturer's certification of conformance to contract requirements and provide copies of test results.

1.4.3 Product Data

1.4.3.1 Coating System Instructions

Submit manufacturer's printed instructions including detailed mixing and application procedures, number and types of coats required, minimum and maximum application temperatures, and curing procedures. Include materials safety data sheets (MSDS) for materials to be used at the job site in accordance with 29 CFR 1926.59.

1.5 DELIVERY AND STORAGE

Ship, store, and handle materials in accordance with SSPC PA 1, and as modified in this Section. Maintain temperature in storage spaces between

40 and 75 degrees F, and air temperature more than 5 degrees F above the dew-point at all times. Inspect materials for damage prior to use and return non-compliant materials to manufacturer. Remove materials with expired shelf life from government property immediately and notify the Contracting Officer. Expired materials may be returned to manufacturer, tested, and if compliant, issued a shelf life extension.

## 1.6 COATING HAZARDS

Ensure that employees are trained in all aspects of the Accident Prevention plan. Specified coatings may have potential health hazards if ingested or improperly handled. The coating manufacturer's written safety precautions shall be followed throughout mixing, application, and curing of the coatings. During all cleaning, cleanup, surface preparation, and paint application phases, ensure that employees are protected from toxic and hazardous chemical agents which exceed concentrations in 29 CFR 1910.1000. Comply with respiratory protection requirements in 29 CFR 1910.134. The CIH shall approve work procedures and personal protective equipment as outlined in the Accident Prevention Plan.

## 1.7 JOB SITE REFERENCES

Make available to the Contracting Officer at least one copy each of ASTM D 3276, ASTM D 3925, ASTM D 4285, ASTM D 4417, SSPC SP COM, SSPC SP 1, SSPC SP 7, SSPC SP 10, SSPC PA 1, SSPC PA 2, SSPC Guide 12, SSPC Guide to VIS 1, SSPC VIS 1, and an SSPC Certified Contractor Evaluation Form at the job site.

## 1.8 PRE-APPLICATION MEETING

After approval of submittals but prior to the initiation of coating work, Contractor representatives, including at a minimum, project superintendent and QC manager, paint foreman, Contracting Officer representatives and coating inspector shall have a pre-application coating preparatory meeting. This meeting shall be in addition to the pre-construction conference. Specific items addressed shall include: work plan, safety plan, inspection standards, inspector qualifications and tools, test procedures, environmental control system, safety plan, and test logs. Notify Contracting Officer at least ten days prior to meeting.

# PART 2 PRODUCTS

## 2.1 COATING SYSTEM

Alternate systems or products will not be considered. All primer, intermediate coat and topcoat materials shall be supplied by one supplier. The entire coating system is intended to be applied in the field.

The Military specification epoxy and polyurethane products specified in this Section do not require approval for listing on the QPL prior to contract award, as indicated in paragraph 3.2 of MIL-DTL-24441 and paragraph 3.1 of MIL-PRF-85285. See specific submittal requirements in Article entitled "Quality Assurance."

### 2.1.1 Zinc-Rich Epoxy Primer Coat

Epoxy polyamide, MIL-DTL-24441/19 (Formula 159, Type III).

2.1.2 Epoxy Intermediate Coat

Epoxy polyamide, MIL-DTL-24441/31 (Formula 152, Type IV, White (Tinted)). Tint to approximately FED-STD-595A color number 27778 parchment using pigment dispersions prepared for epoxy paint tinting. Manufacturer shall tint material and appropriately label. All other requirements of this Military Specification apply.

2.1.3 Polyurethane Topcoat

Polyurethane coating topcoat of MIL-PRF-85285, Type II, Beige color "Langley Special Beige" will be used for the operating and bulk storage tanks. New and repair coatings on the operating and storage tanks shall identically match the current color characteristics. The tank topcoat shall be "Langley Special Beige" and shall be accented with a brown stripe "Langley Brown" FED-STD-595A color number 20100.

Modify paragraph 3.6.4 of MIL-PRF-85285, Viscosity and Pot Life, as follows:

The viscosity of the admixed coating, when tested in accordance with ASTM D 1200 through a No. 4 Ford cup, shall be as follows:

| Time from mix (minimum) | Maximum time through a No. 4 Ford cup |
|---|---|
| Initially | 30 seconds |
| 2 hours | 60 seconds |
| 4 hours | No gel |

Modify paragraph 3.7.1 of MIL-PRF-85285, Drying Time, as follows:

When applied by spray techniques and when tested in accordance with ASTM D 1640, the coating shall be set-to-touch within four hours and dry-hard within eight hours (see 4.6 and table I).

2.2 COATING SAMPLE COLLECTION AND SHIPPING KIT

Provide a kit that contains one quart can for the base of each coating material, an appropriately sized can for each activator, dipping cups for each component to be sampled, a shipping box sized for the samples to to be shipped, and packing material. Mark cans for the appropriate component. Provide shipping documents, including either pre-paid shipping or a shipper number that can be used by the Contracting Officer to arrange pickup, addressed to the approved coating testing laboratory.

2.3 ABRASIVE SAMPLE COLLECTION AND SHIPPING KIT

Provide a kit that contains one suitable plastic bag or container for each sample to be collected. Mark containers for the appropriate component. Provide shipping documents, including either pre-paid shipping or a shipper number that can be used by the Contracting Officer to arrange pickup, addressed to the approved coating testing laboratory.

2.4 SOLUBLE SALTS TEST KITS

2.4.1 Test Kit for Measuring Chlorides on Steel Surfaces

Provide test kits called CHLOR*TEST, as manufactured by CHLOR*RID International Inc. of Chandler, Arizona (www.chlor-rid.com) or equal. An "equal" test kit shall meet the following requirements:

a. Kit contains all materials,supplies, tools and instructions for field testing and on-site quantitative evaluation;

b. Kit extract solution is acidic, factory pre-measured, pre-packaged, and of uniform concentration;

c. Kit components and solutions are mercury free and environmentally friendly;

d. Kit contains a factory sealed titration device;

e. Kit contains new materials and solutions for each test;

f. Test container (vessel, sleeve, cell. etc.) creates a sealed, encapsulated environment during chloride ion extraction;

g. Test container is suitable for testing the following steel surfaces: horizontal (up/down configuration), vertical, flat, curved, smooth, pitted, and rough;

h. Kit uses test container, with resulting chloride ion extract solution, as the titration container;

i. Chloride ion concentration is directly measured in micrograms per square centimeter without using either conversion charts or tables.

## 2.5 ABRASIVE

The referenced abrasive specifications have maximum limits for soluble salts contamination, however, this maximum level of contamination does not guarantee that contamination will not be transferred to the steel surface during abrasive blasting. Other factors such as on-site handling and recycling can allow contamination of abrasive. Contractors are cautioned to verify that the chosen abrasive, along with work and storage processes, allow the final surface cleanliness requirements to be achieved. Successful testing of chlorides in abrasive does not negate the final acceptance testing of steel surfaces.

### 2.5.1 Non-metallic Abrasive

Conform to MIL-A-22262, Type I (Inorganic materials) Use sampling procedures and testing frequencies as prescribed in MIL-A-22262. Use abrasive that is specifically selected and graded to provide a sharp, angular profile to the specified depth. Do not use ungraded abrasive. Make adjustments to processes or abrasive gradation to achieve specified surface profile. Recycled non-metallic abrasive shall meet all requirements of the specification each time that it is placed in the blast pot.

### 2.5.2 Metallic Abrasive

#### 2.5.2.1 New and Remanufactured Steel Grit

Conform to the chemical and physical properties of SSPC AB 3.

#### 2.5.2.2 Recycled Steel Grit

Conform to the chemical and physical properties of SSPC AB 2.

PART 3 EXECUTION

3.1 COATING AND ABRASIVE SAMPLE COLLECTION AND TESTING

3.1.1 Coating Sample Collection

Notify Contracting Officer three days in advance of sampling. The Contracting Officer and either the QC Manager or NACE Coating Inspector shall witness all sampling. Provide a sample collection kit as required in Article entitled "Coating Sample Collection and Shipping Kit." Obtain a one quart sample of each batch of each base material, and proportional samples of each activator based on mix ratio, by random selection from sealed containers in accordance with ASTM D 3925. Prior to sampling, mix contents of each sealed container to ensure uniformity. A batch is defined as that quantity of material processed by the manufacturer at one time and identified by number on the label. Identify samples by designated name, specification number, batch number, project contract number, sample date, intended use, and quantity involved. The Contracting Officer will take possession of the packaged samples, contact the shipping company to arrange for pickup, and relinquish the samples only to the shipping representative for shipment to the approved laboratory for testing as required by the paragraph entitled "Coating Sample Testing."

3.1.2 Abrasive Sample Collection

Notify Contracting Officer three days in advance of sampling. The Contracting Officer and either the QC Manager or NACE Coating Inspector shall witness all sampling. Provide suitably sized containers for each sample to be taken. Provide a sample collection kit as required in Article entitled "Abrasive Sample Collection and Shipping Kit." For purposes of quality conformance inspection, a lot shall consist of all abrasive materials of the same type from a single, uniform batch produced and offered for delivery at one time. Obtain samples of each abrasive lot using the sampling techniques and schedule of MIL-A-22262. The addition of any substance to a batch shall constitute a new lot. Identify samples by designated name, specification number, lot number, project contract number, sample date, intended use, and quantity involved. The Contracting Officer will take possession of the packaged samples, contact the shipping company to arrange for pickup, and relinquish the samples only to the shipping representative for shipment to the approved laboratory for testing as required by the Article entitled "Abrasive Sample Testing."

3.1.3 Coating Sample Test Reports

Test samples of all primer, intermediate, and topcoat materials for compliance with requirements of Table I. Reject entire batch represented by samples that fail one or more tests, reselect, and retest samples.

3.1.4 Abrasive Sample Test Reports

Test samples of abrasive materials for compliance with the appropriate abrasive specification. Reject entire lot represented by samples that fail one or more tests, reselect, and retest samples.

3.2 SURFACES TO BE COATED

Coat exterior surfaces of tank to include any new or modified exterior portions of Tanks #1 and #2. This includes the tank roofs, stairways, nozzles and any surface that was damaged in the installation of new or

modified equipment. Also included are the exterior surfaces of the casement piping.

## 3.3 LIGHTING

Provide lighting for all work areas as prescribed in SSPC Guide 12.

## 3.4 SURFACE PREPARATION

### 3.4.1 Abrasive Blasting Equipment

Use abrasive blasting equipment of conventional air, force-feed, or pressure type. Maintain a minimum pressure of 95 psig at nozzle. Confirm that air supply for abrasive blasting is free of oil and moisture when tested in accordance with ASTM D 4285. Test air quality at each startup, but in no case less often than every five operating hours.

### 3.4.2 Surface Standard

Inspect surfaces to be coated, and select plate with similar properties and surface characteristics for use as a surface standard. Blast clean one or more 1 foot square steel panels as specified in Article entitled "Surface Preparation." Record blast nozzle type and size, air pressure at nozzle and compressor, distance of nozzle from panel, and angle of blast to establish procedures for blast cleaning. Measure surface profile in accordance with ASTM D 4417. When the surface standard complies with all specified requirements, seal with a clearcoat protectant. Use the surface standard for comparison to abrasive blasted surfaces throughout the course of work.

### 3.4.3 Pre-Preparation Testing for Surface Contamination

Perform testing, abrasive blasting, and testing in the prescribed order.

#### 3.4.3.1 Pre-Preparation Testing for Oil and Grease Contamination

Inspect all surfaces for oil and/or grease contamination using two or more of the following inspection techniques: 1) Visual inspection, 2) WATER BREAK TEST, 3) CLOTH RUB TEST. Reject oil and/or grease contaminated surfaces, clean in accordance with SSPC SP 1, and recheck for contamination until surfaces are free of oil and grease.

WATER BREAK TEST - Spray atomized mist of distilled water onto surface, and observe for water beading. If water "wets" surface rather than beading up, surface can be considered free of oil or grease contamination. Beading of water (water forms droplets) is evidence of oil or grease contamination.

CLOTH RUB TEST - Rub a clean, white, lint free, cotton cloth onto surface and observe for discoloration. To confirm oil or grease contamination in lightly stained areas, a non-staining solvent may be used to aid in oil or grease extraction. Any visible discoloration is evidence of oil or grease contamination.

#### 3.4.3.2 Pre-Preparation Testing for Soluble Salts Contamination

Test surfaces for soluble salts, and wash as required, prior to abrasive blasting. Soluble salt testing is also required in Article entitled "Pre-Application Testing for Soluble Salts Contamination" as a final acceptance test of prepared surfaces after abrasive blasting, and

successful completion of this phase does not negate that requirement. This phase is recommended since pre-preparation testing and washing are generally more advantageous than attempting to remove soluble salt contamination after abrasive blasting. Effective removal of soluble salts will require removal of any barrier to the steel surface, including rust. This procedure may necessitate combinations of wet abrasive blasting, high pressure water rinsing, and cleaning using a solution of water washing and soluble salts remover. The soluble salts remover shall be acidic, biodegradable, nontoxic, noncorrosive, and after application, will not interfere with primer adhesion. Delays between testing and preparation, or testing and coating application, may allow for the formation of new contamination. Use potable water, or potable water modified with soluble salt remover, for all washing or wet abrasive blasting. Test methods and equipment used in this phase are selected at the Contractor's discretion.

### 3.4.4 Abrasive Blasting

Abrasive blast steel surfaces to near-white metal in accordance with SSPC SP 10. Prepared surfaces shall conform to SSPC VIS 1 and SSPC Guide to VIS 1 and shall match the prepared test-panels. Provide a 2 to 3 mil surface profile. Reject profile greater than 3 mils, discontinue abrasive blasting, and modify processes and materials to provide the specified profile. Measure surface profile in accordance with ASTM D 4417. Measure profile at rate of three tests for the first 1000 square feet plus one test for each additional 1000 square feet or part thereof. Provide two additional measurements for each non-compliant measurement. When surfaces are reblasted for any reason, retest profile as specified. If Method C of ASTM D 4417 is used to measure profile, attach test tapes to Daily Inspection Reports. Following abrasive blasting, remove dust and debris by brushing, blowing with oil-free and moisture-free compressed air, or vacuum cleaning. Time interval between abrasive blasting and application of primer shall not exceed eight hours.

### 3.4.5 Disposal of Used Abrasive

Dispose of used abrasive off Government property in accordance with Federal, State, and Local mandated regulations.

### 3.4.6 Pre-Application Testing For Surface Contamination

#### 3.4.6.1 Pre-Application Testing for Oil and Grease Contamination

Ensure tank surfaces are free of contamination as described in Article entitled "Pre-Preparation Testing for Oil and Grease Contamination," except that only questionable areas need be checked for beading of water misted onto surface.

#### 3.4.6.2 Pre-Application Testing for Soluble Salts Contamination

Test surfaces for chloride contamination using the Test Kit described in article entitled "Test Kit for Measuring Chlorides on Steel Surfaces." Test all surfaces at rate of three tests for the first 1000 square feet plus one test for each additional 2000 square feet or part thereof. Perform 30% of tests on bare steel at welds, divided equally between horizontal and vertical welds. One or more readings greater than 5 micrograms per square centimeter of chlorides is evidence of chloride contamination. Reject contaminated surfaces, wash as discussed in article entitled "Pre-Preparation Testing for Soluble Salts Contamination," allow to dry, and re-test until all required tests show allowable results. Reblast

tested and cleaned areas as required. Label all test tubes and retain for test verification.

3.4.6.3 Pre-Application Testing for Surface Cleanliness

Apply coatings to dust free surfaces. To test surfaces, apply strip of clear adhesive tape to surface and rub onto surface with finger. When removed, the tape should show little or no dust, blast abrasive, or other contaminant. Reject contaminated surfaces and retest. Test surfaces at rate of three tests for the first 1000 square feet plus one test for each additional 1000 square feet or part thereof. Provide two additional tests for each failed test or questionable test. Attach test tapes to Daily Inspection Reports.

3.5 MIXING AND APPLICATION OF SEALANT AND COATING SYSTEM

3.5.1 Preparation of Sealant and Coating Materials for Application

Each of the sealant, primer, intermediate, and topcoat materials is a two-component material supplied in separate containers.

3.5.1.1 Mixing Sealant, Primer and Intermediate Coat Materials

Mix in accordance with manufacturer's instructions, which may differ for each product. Do not mix partial kits, or alter mix ratios. Mix materials in same temperature and humidity conditions specified in article entitled "Delivery and Storage." Allow mixed material to stand for the required induction time based on its temperature.

3.5.1.2 Mixing Topcoat Material

Do not mix partial kits, or alter mix ratios. Mix polyurethane coating materials in same temperature conditions specified in article entitled "Delivery and Storage." The polyurethane coating material is moisture sensitive and any introduction of moisture or water into the material during mixing or application will shorten usable pot life. Use a mixer that does not create a vortex. Do not add solvent without specific written recommendation from the manufacturer. No induction time is required, only thorough agitation of the mixed material.

3.5.1.3 Pot Life

Apply mixed products within stated pot life for each product. Stop applying when material becomes difficult to apply in a smooth, uniform wet film. Add all required solvent at time of mixing. Do not add solvent to extend pot life. Pot life is based on standard conditions at 70 degrees F and 50 percent relative humidity. For every 18 degrees F rise in temperature, pot life is reduced by approximately half, and for every 18 degrees F drop it is approximately doubled. Usable pot life depends on the temperature of the material at the time of mixing and the sustained temperature at the time of application. Other factors such as the shape of the container and volume of mixed material may also affect pot life. Precooling or exterior icing of components for at least 24 hours to a minimum of 50 degrees F in hot climates will extend pot life. High humidity at time of mixing and application shortens pot life of the Polyurethane topcoat material. Following are approximate pot life times:

| | |
|---|---|
| Sealant | As specified by manufacturer |
| Epoxy primer and intermediate materials | 4 hours |

Polyurethane topcoat materials 2 hours.

3.5.1.4 Application Conditions and Recoat Windows

The application condition requirements for the coating system are very time and temperature sensitive, and are intended to avoid the delamination problems frequently found on industrial structures. Plan coating application to ensure that specified temperature, humidity, and condensation conditions are met. If conditions do not allow for orderly application of sealant, primer, stripe coat, intermediate coat and topcoat, use appropriate means of controlling air and surface temperatures, as required. Partial or total enclosures may be required, as well as other measures, to control conditions to allow for orderly application of all required coats.

Apply coating only when ambient air and steel temperatures are between 60 and 100 degrees F, and steel surface temperature is more than 5 degrees F above the dew-point of the ambient air during application and the first four hours for epoxy and the first eight hours for polyurethane. Do not apply coatings above 100 degrees F or below 60 degrees F.

Use Table entitled "RECOAT WINDOWS" to determine appropriate recoat windows for each coat after the initial coat. Apply each coating during appropriate RECOAT WINDOW.

If coating is not applied during RECOAT WINDOW, apply during EXTENDED RECOAT WINDOW. Application of any epoxy coat within the EXTENDED RECOAT WINDOW requires application of a TACK COAT prior to applying any full coat. Perform cure test immediately prior to application of TACK COAT to determine condition of applied coating. If CURE TEST indicates that surface is fully cured, provide GLOSS REMOVAL prior to application of TACK COAT.

If coating is not applied during EXTENDED RECOAT WINDOW, or if surface temperature exceeds 120 degrees F between applications, wash surface with water and detergent, rinse clean with fresh water and allow surface to dry thoroughly, provide GLOSS REMOVAL, apply TACK COAT, where applicable, within 24 hours, and apply next full coat within TACK COAT RECOAT WINDOW.

RECOAT WINDOWS

EPOXY OVER EPOXY

| Temperature degrees F | 60-70 | 71-80 | 81-90 | 91-100 | 101-110 | 111-120 |
|---|---|---|---|---|---|---|
| RECOAT WINDOW (Hrs.) | 24-72 | 18-60 | 16-48 | 12-36 | 8-18 | 4-6 |
| EXTENDED RECOAT WINDOW (Hrs.) | 72-168 | 60-140 | 48-120 | 36-96 | 18-36 | 6-12 |
| TACK COAT RECOAT WINDOW (Hrs.) | 6-72 | 4-60 | 4-48 | 3-36 | 2-18 | 1-6 |

POLYURETHANE OVER EPOXY

| Temperature degrees F | 60-70 | 71-80 | 81-90 | 91-100 | 101-110 | 111-120 |
|---|---|---|---|---|---|---|
| RECOAT WINDOW (Hrs.) | 24-96 | 24-72 | 16-48 | 12-36 | 10-24 | 8-16 |
| EXTENDED RECOAT WINDOW (Hrs.) | 96-168 | 72-144 | 48-120 | 36-96 | 24-48 | 16-24 |
| TACK COAT RECOAT | 24-96 | 24-72 | 16-48 | 12-36 | 10-24 | 8-16 |

RECOAT WINDOWS
WINDOW (Hrs.)

POLYURETHANE OVER POLYURETHANE

| Temperature degrees F | 60-70 | 71-80 | 81-90 | 91-100 | 101-110 | 111-120 |
|---|---|---|---|---|---|---|
| RECOAT WINDOW (Hrs.) | 8-48 | 6-48 | 4-36 | 3-24 | 2-12 | 1-2 |
| EXTENDED RECOAT WINDOW (Hrs.) | NONE ---------- | | | | | |
| TACK COAT RECOAT WINDOW (Hrs.) | NO TACK COAT USED ---------- | | | | | |

The temperature ranges shown in the table above are for determining recoat windows. Choose recoat window based on the highest surface temperature that was sustained for one or more hours between coats. This applies to the entire time between coats. Measure and record air and surface temperatures on hourly basis to determine appropriate recoat windows. If surface temperature goes above 100 degrees F, measure and record temperatures every half hour.

CURE TEST - Where indicated, test surface for cure using high-flash aromatic Naphtha only (cas #64742-95-6). Do not use aliphatic VMP Naphtha. Wipe surface with rag saturated with Naphtha, and check for surface tackiness, loss of gloss, or other indications that solvent has softened surface. If softening is found on 95% of test sites, this is indication that coating has not fully cured, and GLOSS REMOVAL is not required if TACK COAT is applied within three hours and full coat is applied within the TACK COAT RECOAT WINDOW. Test surfaces at rate of three tests for the first 1000 square feet plus one test for each additional 1000 square feet or part thereof.

TACK COAT - Where indicated, apply coat of intermediate coat epoxy, at 1 to 2 mils WFT, then apply next specified full coat within TACK COAT RECOAT WINDOW. Thin TACK COAT material approximately 25% by volume, using appropriate epoxy thinner.

GLOSS REMOVAL - Where indicated, remove all gloss by hand sanding with 150-200 grit wet/dry sandpaper in a linear fashion, pressure wash or wipe down with a clean rag soaked with denatured alcohol to remove dust. Do not use rotary sanders or grinders.

3.5.2 Application of Coating System

Apply coatings in accordance with SSPC PA 1 and as specified herein. Apply coatings to surfaces that meet all stated surface preparation requirements.

After application of primer coat and prior to application of each subsequent coat, perform testing prescribed in article entitled "Pre-Application Testing For Surface Contamination," as necessary, to ensure minimal intercoat contamination. This testing may be reduced to one half of the prescribed rate for bare steel if the testing indicates no contamination when sampling is evenly distributed over surfaces being tested. If contamination is found between coats, revert to the specified testing rate. Generally, oil and grease contamination and soluble salts contamination are not encountered if subsequent coats are applied within specified recoat windows and unusual atmospheric events do not occur. Such atmospheric events as a coastal storm blowing onshore can bring unusual

chloride contamination. Concern for intercoat contamination should be continually prevalent, and spot testing should be accomplished to verify satisfactory conditions. Where visual examination or spot testing indicates contamination, perform sufficient testing to verify non-contamination, or to define extent of contamination for appropriate treatment.

Apply each coat in a consistent wet film, at 90 degrees to previous coat. Ensure that primer and intermediate coat "cold joints" are no less than six inches from welds. Apply stripe coat by brush. Apply all other coats by spray application. Use appropriate controls to prevent airborne coating fog from drifting beyond 15 feet from the structure perimeter. Cover or protect all surfaces that will not be coated. The cleanliness, temperature, recoat windows, and airborne paint containment requirements may necessitate the use of enclosures, portable shelters, or other appropriate controls.

Apply coatings at the following specified thickness:

| Coat | Desired Thickness Range Mils DFT | Minimum Mils DFT | Maximum Mils DFT |
|---|---|---|---|
| Primer | 2 - 5 | 2 | 6 |
| Intermediate | 3 - 5 | 3 | 8 |
| Top | 2 - 3 | 2 | 4 |
| Total system | ----- | 9 | 12 |

3.5.2.1 Application of Primer

Apply primer coat, maintaining paint supply container height within 3 feet of the paint nozzle for applying zinc primer. Maintain constant agitation of paint pot to ensure that zinc does not settle in container.

3.5.2.2 Application of Stripe Coat

Apply a stripe coat of intermediate coat epoxy material within RECOAT WINDOW of primer, allowing sufficient dry time to allow application of intermediate coat within RECOAT WINDOW of primer. Apply by brush, working material into corners, crevices, angles, and welds, and onto outside corners and angles.

3.5.2.3 Application of Intermediate Coat

Apply intermediate coat within RECOAT WINDOW of primer coat.

3.5.2.4 Application of Topcoat

Make all required repairs to primer and intermediate coats as specified in paragraph entitled "Procedure for Holiday and Spot Repairs of Newly Applied Coating" prior to applying topcoat. Apply topcoat within RECOAT WINDOW of intermediate coat. The polyurethane topcoat may require multiple passes to achieve desired aesthetics and required thickness. Consult manufacturer for thinning and application procedures for anticipated temperature, humidity, and wind conditions. Touch-up blemishes and defects within recoat window of polyurethane topcoat. Retain sample of polyurethane topcoat, from the same batch used to coat structure, to make touch-ups that might be required later.

3.5.2.5 Procedure for Holiday and Spot Repairs of Newly Applied Coating

Repair coating film defects at the earliest practicable time, preferably before application of the succeeding coat. Observe all requirements for soluble salts contamination, cleanliness between coats, and application conditions. Prepare defective area in accordance with SSPC SP 10, and feather coating as required to leave 4 inches of each succeeding coat feathered and abraded. Protect adjacent areas from damage and overspray. Remove dust and solvent wipe the prepared area plus an additional 4 inches beyond the prepared area with clean denatured alcohol. Apply each coat within RECOAT WINDOW of preceeding coat. Within four hours of preparation, apply zinc-rich primer to prepared steel and feather onto prepared primer. Apply intermediate coat to primed area and feather to prepared intermediate area. Apply topcoat to intermediate coat and feather to prepared topcoat. Apply each repair coat to approximate thickness of surrounding coating system.

3.5.2.6 Structure Occupancy After Coating Application

Use clean canvas or other approved shoe covers when walking on coated surfaces, regardless of curing time allowed. For heavily trafficked areas, provide cushioned mats for additional protection.

3.6 FIELD TESTS AND INSPECTION

For marking of tank surfaces, use chalk for marking bare steel, and water based markers for marking coated surfaces, and remove marks prior to coating. Do not use any wax or grease based markers, or any other markers that leave a residue or stain.

3.6.1 Coating Inspector

The coating inspector shall work for the CQC Manager in accordance with Section 01451 CONTRACTOR QUALITY CONTROL. The Coating Inspector shall be present during all pre-preparation testing, surface preparation, coating application, initial cure of the coating system, and during all coating repair work. The Coating Inspector shall provide complete documentation of conditions and occurrences on the job site, and be aware of conditions and occurrences that are potentially detrimental to the coating system. The requirements for inspection listed in this Section are in addition to the QC inspection and reporting requirements outlined in Section 01451. The Coating Inspector shall prepare a project reference sheet outlining all requirements, tests, test methods, and evaluation criteria, and hold regular meetings with contractor personnel, including nozzlemen and applicators, to review requirements and evaluation criteria for upcoming work in advance of the work.

3.6.2 Field Inspection

3.6.2.1 Inspection Requirements

Accomplish field inspection in accordance with ASTM D 3276 and as required herein. Perform all appropriate tests and inspections, except that viscosity and weight per gallon measurements are not required. Provide all tools and instruments required to perform the required testing, as well as any tools or instruments that the inspector considers necessary to perform the required inspections and tests. Document each inspection and test, including required hold points and other required inspections and tests, as well as those inspections and tests deemed prudent from on-site evaluation,

as follows:

a. Location or area;
b. Purpose (required or special);
c. Method;
d. Criteria for evaluation;
e. Results;
f. Determination of compliance;
g. List of required rework;
h. Observations.

Collect and record Environmental Conditions as described in ASTM D 3276 on a 24 hour basis, as follows:

a. During surface preparation, every two hours or when changes occur;
b. During coating application and the first four days of initial cure, every hour, or when changes occur;
c. Overnight hours may be excluded if conditions are measured and recorded through 1800 hours and then prior to dawn the next day;
d. Note location, time, and temperature of the highest and lowest surface temperatures each day.
e. Use a non-contact thermometer to locate temperature extremes, then verify with contact thermometers.

Document all equipment used in inspections and testing, including manufacturer, model number, serial number, last calibration date and future calibration date, and results of on-site calibration performed.

3.6.2.2 Daily Inspection Reports

Submit one copy of daily inspection report completed each day when performing work under this Section, to the Contracting Officer. Use ASTM D 3276 Appendix X1 Inspection Checklist to monitor daily activity and prepare Daily Inspection Report. Use of forms containing entry blocks for all required data is encouraged. The data may be in any format, but must be legible and presented so that it can be easily interpreted. Note all non-compliance issues, and all issues that were reported for rework in accordance with QC procedures of Section 01451. Submit report within 24 hours of date recorded on the report.

3.6.2.3 Inspection Logbook

A continuous record of all activity related to this Section shall be maintained in an Inspection Logbook on a daily basis. The logbook shall be hard or spiral bound with consecutively numbered pages, and shall be used to record all information provided in the Daily Inspection Reports, as well as other pertinent observations and information. The Coating Inspector's Logbook that is sold by NACE is satisfactory. Submit the original Inspection Logbook to the Contracting Officer upon completion of the project and prior to final payment.

3.6.2.4 Inspection Equipment

All equipment shall be in good condition, operational within its design range, and calibrated as required by the specified standard for use of each device.

3.6.3 Hold Points for Quality Control Inspections

Provide appropriate QC inspections at the following hold-points:

| Step | Action |
|---|---|
| Prior to preparation of structure(s) for cleaning and repair | Safety inspection |
| After cleaning of structure(s) and prior to abrasive blasting | 1. Safety inspection, removal of dirt, trash, debris, and any hindrance to abrasive blasting.<br><br>2. Surface inspection for oil, grease, soluble salts, or other contaminants |
| Initiation of abrasive blasting, and at each work stoppage | 1. Confirm environmental conditions are suitable for abrasive blasting and coating, and are expected to remain suitable to the point where the coating will be unaffected.<br><br>2. Surface inspection to insure all aspects of surface preparation are properly addressed, as specified in article entitled "Surface Preparation."<br><br>3. Test compressor air for oil and water contamination |
| After abrasive blasting | Surface inspection to insure all aspects of surface preparation are properly addressed, as specified in article entitled "Surface Preparation." |
| Immediately prior to coating application - provide for each coating application evolution | 1. Confirm environmental conditions are suitable for coating application and are expected to remain suitable to the point where the coating will be unaffected.<br><br>2. Surface inspection to insure all aspects of surface preparation are properly addressed, as specified in article entitled "Surface Preparation."<br><br>3. Confirm that testing equipment for monitoring for hazardous conditions during coating application are working properly and are prepared for use as outlined in contractor's Safety Plan. |
| During and after coating application. | Coating application inspection per paragraphs entitled "Application of Coating System" and "Field Tests and Inspection". |
| After final cleanup | Clean-up inspection specified in the paragraph entitled "Final Cleanup." |

## 3.7 FINAL CLEANUP

Following completion of the work, remove debris, equipment, and materials from the site. Remove temporary connections to Government or Contractor furnished water and electrical services. Restore existing facilities in and around the work areas to their original condition.

TABLE 1
COATING QUALITY CONFORMANCE INSPECTION REQUIREMENTS

Table Ia - Zinc-rich Epoxy Primer Coat MIL-DTL-24441/19 Formula 159

| Test | Component A | | Component B | | Mixed | |
|---|---|---|---|---|---|---|
| | Min. | Max. | Min. | Max. | Min. | Max. |
| Pigment content, percent (zinc dust) | --- | --- | 81.5 | 85.5 | --- | --- |
| Volatiles, percent | 42.8 | 44.3 | 8.0 | 8.4 | --- | --- |
| Non-volatile vehicle percent | 53.7 | 57.7 | 8.3 | 8.7 | --- | --- |
| Weight, | | | | | | |
| Kilograms/liter | 0.87 | 1.01 | 3.30 | 3.40 | --- | --- |
| Pounds/gallon | 7.3 | 8.4 | 27.5 | 28.4 | --- | --- |
| Flashpoint | | | | | | |
| Degrees C | 35.6 | --- | 37.8 | --- | --- | --- |
| Degrees F | 96 | --- | 100 | --- | --- | --- |
| Consistency, grams | --- | --- | 250 | 500 | --- | --- |
| Set to touch time, hours at 23 degrees C, 73 degrees F | --- | --- | --- | --- | --- | 2 |
| Dry-hard time, hours at 23 degrees C, 73 degrees F | --- | --- | --- | --- | --- | 8 |
| Pot life, hours at 23 degrees C, 73 degrees F | --- | --- | --- | --- | 4 | --- |
| Sag resistance | | | | | | |
| Micrometers | --- | --- | --- | --- | 300 | --- |
| Mils | --- | --- | --- | --- | 12 | --- |
| VOC | | | | | | |
| Grams/liter | --- | --- | --- | --- | --- | 304 |
| Pounds/gallon | --- | --- | --- | --- | --- | 2.5 |

NOTES:
Test methods as specified in MIL-DTL-24441.

TABLE 1
COATING QUALITY CONFORMANCE INSPECTION REQUIREMENTS

Table Ib. - Epoxy Intermediate Coat MIL-DTL-24441/31 Formula 152 Type IV (White (Tinted))

| Test | Component A | | Component B | | Mixed | |
|---|---|---|---|---|---|---|
| | Min. | Max. | Min. | Max. | Min. | Max. |
| Pigment content, percent | 44.0 | 49.0 | 33.0 | 38.0 | --- | --- |
| Volatiles, percent | 29.0 | 35.0 | 16.0 | 21.0 | --- | --- |
| Non-volatile vehicle, percent | 17.5 | 23.5 | 44.0 | 49.0 | --- | --- |
| Coarse particles, percent | --- | 0.3 | --- | 0.3 | --- | --- |
| Consistency, grams | 180 | 320 | 300 | 470 | --- | --- |
| Weight | | | | | | |
| Kilograms/liter | 1.39 | 1.45 | 1.29 | 1.35 | --- | --- |
| Pounds per gallon | 11.6 | 12.1 | 10.8 | 11.3 | --- | --- |
| Set to touch, hours at 23 degrees C, 73 degrees F | --- | --- | --- | --- | --- | 3 |
| Dry-hard time, hours at 23 degrees C, 73 degrees F | --- | --- | --- | --- | --- | 8 |
| Fineness of grind, Hegman | 4 | --- | 4 | --- | --- | --- |
| Flashpoint | | | | | | |
| Degrees C | 35.5 | --- | 37.8 | --- | --- | --- |
| Degrees F | 96 | --- | 100 | --- | --- | --- |
| Titanium dioxide, percent of pigment | 91 | --- | --- | --- | --- | --- |
| Pot life, hours at 23 degrees C, 73 degrees F | --- | --- | --- | --- | 4 | --- |
| Sag resistance | | | | | | |
| Micrometers | --- | --- | --- | --- | 300 | --- |
| Mils | --- | --- | --- | --- | 12 | --- |
| Color of dry film to approximate color of FED-STD 595 color 27778 | --- | --- | --- | --- | Conform | |
| Contrast ratio, at 75 micrometers, 3 mils DFT | --- | --- | --- | --- | 0.98 | --- |
| VOC | | | | | | |
| Grams/liter | --- | --- | --- | --- | --- | 340 |
| Pounds/gallon | --- | --- | --- | --- | --- | 2.8 |

GENERAL NOTES:
Test methods as specified in MIL-DTL-24441.
Where "Conform" is indicated, refer to specific requirements of MIL-DTL-24441/31.

TABLE 1
COATING QUALITY CONFORMANCE INSPECTION REQUIREMENTS

Table Ic - Polyurethane Topcoat MIL-PRF-85285 Type II
(White and Colors)

| Test | Component A Min. | Component A Max. | Component B Min. | Component B Max. | Mixed Min. | Mixed Max. |
|---|---|---|---|---|---|---|
| Moisture content, percent | --- | 1 | --- | --- | --- | --- |
| Coarse particles, percent | --- | --- | --- | --- | --- | .5 |
| Viscosity | --- | --- | --- | --- | See Note 1 | |
| Fineness of grind, Hegman | --- | --- | --- | --- | 7 | --- |
| Drying to touch (See Note 2) | --- | --- | --- | --- | --- | 4 |
| Dry hard (See Note 2) | --- | --- | --- | --- | --- | 8 |
| VOC, grams per liter | --- | --- | --- | --- | --- | 340 |
| Color | --- | --- | --- | --- | delta E+-1.0 | |
| Gloss 60 degree specular gloss | | | | | | |
| Gloss | --- | --- | --- | --- | --- | 90 |
| Semi-gloss | --- | --- | --- | --- | 15 | 45 |
| Opacity | --- | --- | --- | --- | 0.95 | --- |
| Flexibility | --- | --- | --- | --- | Conform | |
| Fluid resistance | --- | --- | --- | --- | Conform | |
| Heat resistance (cure) | --- | --- | --- | --- | Conform | |
| Solvent resistance (cure) | --- | --- | --- | --- | Conform | |
| Condition in container | --- | --- | --- | --- | Conform | |
| Odor | --- | --- | --- | --- | Conform | |
| Lead percent | --- | --- | --- | --- | --- | 0.06 |
| Cadmium percent | --- | --- | --- | --- | --- | 0.06 |
| Chromium percent | --- | --- | --- | --- | --- | 0.00 |

NOTES:
(1) Modify paragraph 3.6.4 Viscosity and Pot Life, of MIL-PRF-85285 as follows:

The viscosity of the admixed coating, when tested in accordance with ASTM D 1200 through a No. 4 Ford cup, shall be as follows:

| Time from mix (minimum) | Maximum time through a No. 4 Ford cup |
|---|---|
| Initially | 30 seconds |
| 2 hours | 60 seconds |
| 4 hours | No gel |

(2) Modify paragraph 3.7.1 Drying Time, of MIL-PRF-85285

When applied by spray techniques and when tested in accordance with ASTM D 1640, the coating shall be set-to-touch within four hours and dry-hard within eight hours (see 4.6 and table I).

GENERAL NOTES:
- Test methods as specified in MIL-PRF-85285.
- Where "Conform" is indicated, refer to specific requirements of MIL-PRF-85285.

-- End of Section --

SECTION TABLE OF CONTENTS

DIVISION 09 - FINISHES

SECTION 09973

INTERIOR COATING OF WELDED STEEL PETROLEUM FUEL TANKS

**09/01**

PART 1 GENERAL

1.1 REFERENCES
1.2 DEFINITIONS
1.3 SUBMITTALS
1.4 QUALITY ASSURANCE
1.4.1 Design Data
1.4.1.1 Environmental Control System
1.4.2 Test Reports
1.4.2.1 Recycled Metallic Abrasive Field Test Reports (Daily and Weekly)
1.4.3 Certificates
1.4.3.1 Work Plan
1.4.3.2 Qualifications of Certified Industrial Hygienist (CIH)
1.4.3.3 Qualifications of Testing Laboratory for Coatings
1.4.3.4 Qualifications of Testing Laboratory for Abrasive
1.4.3.5 Qualifications of Coating Contractors
1.4.3.6 Epoxy Coating Materials
1.4.3.7 Non-metallic Abrasive
1.4.3.8 Metallic Abrasive
1.4.4 Product Data
1.4.4.1 Coating System Instructions
1.5 DELIVERY AND STORAGE
1.6 COATING HAZARDS
1.7 WORK SEQUENCE
1.8 JOB SITE REFERENCES
1.9 PRE-APPLICATION MEETING

PART 2 PRODUCTS

2.1 COATING SYSTEM
2.1.1 Epoxy Primer, Intermediate, and Topcoats
2.1.1.1 Epoxy Primer Coat
2.1.1.2 Epoxy Intermediate Coat
2.1.1.3 Epoxy Topcoat
2.2 COATING SAMPLE COLLECTION AND SHIPPING KIT
2.3 ABRASIVE SAMPLE COLLECTION AND SHIPPING KIT
2.4 SOLUBLE SALTS TEST KITS
2.4.1 Test Kit for Measuring Chlorides on Steel Surfaces
2.5 ABRASIVE
2.5.1 Non-metallic Abrasive
2.5.2 Metallic Abrasive
2.5.2.1 New and Remanufactured Steel Grit
2.5.2.2 Recycled Steel Grit

PART 3 EXECUTION

3.1 COATING AND ABRASIVE SAMPLE COLLECTION AND TESTING
3.1.1 Coating Sample Collection
3.1.2 Abrasive Sample Collection
3.1.3 Coating Sample Test Reports
3.1.4 Abrasive Sample Test Reports
3.2 LIGHTING
3.3 ENVIRONMENTAL CONDITIONS
3.3.1 Control System Requirements
3.3.1.1 Humidity Control for Surface Preparation and Primer Application
3.3.1.2 Humidity Control for Application of Intermediate and Topcoats and Initial Curing
3.4 EQUIPMENT USED IN TANK
3.5 SURFACES TO BE COATED
3.6 SURFACE PREPARATION
3.6.1 Abrasive Blasting Equipment
3.6.2 Surface Standard
3.6.3 Pre-Preparation Testing for Surface Contamination
3.6.3.1 Pre-Preparation Testing for Oil and Grease Contamination
3.6.3.2 Pre-Preparation Testing for Soluble Salts Contamination
3.6.4 Abrasive Blasting
3.6.5 Disposal of Used Abrasive
3.6.6 Pre-Application Testing For Surface Contamination
3.6.6.1 Pre-Application Testing for Oil and Grease Contamination
3.6.6.2 Pre-Application Testing for Soluble Salts Contamination
3.6.6.3 Pre-Application Testing for Surface Cleanliness
3.7 MIXING AND APPLICATION OF SEALANT AND COATING SYSTEM
3.7.1 Preparation of Sealant and Coating Materials for Application
3.7.1.1 Mixing
3.7.1.2 Pot Life
3.7.1.3 Application Conditions and Recoat Windows
3.7.2 Application of Coating System
3.7.2.1 Application of Stripe Coat
3.7.2.2 Application of Primer
3.7.2.3 Application of Intermediate Coat
3.7.2.4 Application of Topcoat
3.7.3 Holiday Testing
3.7.4 Procedure for Holiday and Spot Repairs of Newly Applied Coating
3.7.5 Tank Occupancy After Coating Application
3.7.6 Extended Cure of Coating System Prior to Immersion Service
3.8 FIELD TESTS AND INSPECTION
3.8.1 Coating Inspector
3.8.2 Field Inspection
3.8.2.1 Inspection Requirements
3.8.2.2 Daily Inspection Reports
3.8.2.3 Inspection Logbook
3.8.3 Inspection Equipment
3.8.3.1 Black Light
3.8.4 Hold Points for Quality Control Inspections
3.9 FINAL CLEANUP

-- End of Section Table of Contents --

SECTION 09973

INTERIOR COATING OF WELDED STEEL PETROLEUM FUEL TANKS
**09/01**

PART 1 GENERAL

Work to include surface preparation and coating of all new or modified interior steel portions of the tanks, cone roofs, manways and the exterior portions of steel piping located internal to the tanks. The floating pan (where applicable), interior ladder and aluminum stilling well shall be protected from overspray and not coated. All stainless steel and aluminum components inside the tank shall not be coated and shall be protected from overspray.

Each tank will receive a repair coating where the installation of a new level switch nozzle or piping nozzle incurs damage to the existing coating. The repair coating shall be in accordance with the requirements stated in the "Procedure for Holiday and Spot Repairs of Newly Applied Coating", paragraph 3.7.4.

1.1 REFERENCES

The publications listed below form a part of this specification to the extent referenced. The publications are referred to in the text by the basic designation only.

AMERICAN PETROLEUM INSTITUTE (API)

| | |
|---|---|
| API Std 653 | (1997 Am. 2) Tank Inspection, Repair, Alteration, and Reconstruction |

AMERICAN SOCIETY FOR TESTING AND MATERIALS (ASTM)

| | |
|---|---|
| ASTM D 3276 | (1996) Standard Guide for Painting Inspectors (Metal Substrates) |
| ASTM D 3925 | (1991) Sampling Liquid Paints and Related Pigmented Coatings |
| ASTM D 4285 | (1999) Indicating Oil or Water in Compressed Air |
| ASTM D 4417 | (1993) Field Measurement of Surface Profile of Blast Cleaned Steel |

U.S. NATIONAL ARCHIVES AND RECORDS ADMINISTRATION (NARA)

| | |
|---|---|
| 29 CFR 1910.134 | Respiratory Protection |
| 29 CFR 1910.1000 | Air Contaminants |

| | |
|---|---|
| 29 CFR 1926.59 | Hazard Communication |

U.S. GENERAL SERVICES ADMINISTRATION (GSA)

| | |
|---|---|
| FED-STD-595 | (Rev. B) Colors Used in Government Procurement |

U.S. DEPARTMENT OF DEFENSE (DOD)

| | |
|---|---|
| MIL-A-22262 | (Rev. B) Abrasive Blasting Media Ship Hull Blast Cleaning |
| MIL-DTL-24441 | (Rev. C; Supp. 1) Paint, Epoxy-Polyamide |
| MIL-DTL-24441/29 | (Rev. A) Paint, Epoxy-Polyamide, Green Primer, Formula 150, Type IV |
| MIL-DTL-24441/31 | (Rev. A) Paint, Epoxy-Polyamide, White, Formula 152, Type IV |

NACE INTERNATIONAL (NACE)

| | |
|---|---|
| NACE RP0178 | (1995) Fabrication Details, Surface Finish Requirements, and Proper Design Considerations for Tanks and Vessels to be Lined for Immersion Service |
| NACE RP0188 | (1999) Discontinuity Testing of Protective Coatings |

THE SOCIETY FOR PROTECTIVE COATINGS (SSPC)

| | |
|---|---|
| SSPC AB 2 | (1999) Cleanliness of Recycled Ferrous Metallic Abrasives |
| SSPC AB 3 | (1997) Newly Manufactured or Re-Manufactured Steel Abrasives |
| SSPC Guide to VIS 1 | (1989) Guide to Visual Standard for Abrasive Blast Cleaned Steel |
| SSPC VIS 1 | (1989) Visual Standard for Abrasive Blast Cleaned Steel (Standard Reference Photographs) |
| SSPC SP COM | (2000) Surface Preparation Commentary |
| SSPC SP 1 | (1982) Solvent Cleaning |
| SSPC SP 5 | (1994) White Metal Blast Cleaning |
| SSPC SP 7 | (1994) Brush-Off Blast Cleaning |
| SSPC PA 1 | (2000) Shop, Field, and Maintenance Painting |
| SSPC PA 2 | (1997) Measurement of Dry Paint Thickness with Magnetic Gages |

| | |
|---|---|
| SSPC Guide 12 | (1998) Guide for Illumination of Industrial Painting Projects |
| SSPC QP 1 | (1998) Evaluating Qualifications of Painting Contractors (Field Application to Complex Industrial Structures) |

ENGINEERING MANUALS

## 1.2 DEFINITIONS

Definitions are provided throughout this Section, generally in the Article where used, and denoted by capital letters. The following definitions are used throughout this Section:

a. CEILING - interior tank surfaces that extend from the horizontal plane at the designated maximum fuel line upward, including the upper portion of the tank shell (walls), columns, structural steel, the underside of the roof plates and other steel components in this area.

b. SHELL - interior tank surfaces that extend along the vertical tank walls between the horizontal planes approximately 40 inches above the shell to bottom joint upward to the horizontal plane at the designated fuel line, including columns, wall plates, and other steel components in this area.

c. FLOOR - interior tank surfaces below the horizontal plane approximately 40 inches above the shell to bottom joint, including columns, wall plates, piping, pipe supports, bottom plates, and other steel components in this area.

## 1.3 SUBMITTALS

Submit the following in accordance with Section 01330, "Submittal Procedures."

SD-05, Design Data

Environmental Control System; G-AO

SD-06 Test Reports

Coating Sample Test Reports; G-AO

Abrasive Sample Test Reports; G-AO

Daily Inspection Reports

Recycled Metallic Abrasive Field Test Reports (Daily and Weekly)

SD-07 Certificates

Work Plan; G-AO

Qualifications of Certified Industrial Hygienist (CIH); G-AO

Qualifications of Testing Laboratory for Coatings; G-AO

Qualifications of Testing Laboratory for Abrasive; G-AO

Qualifications of Coating Contractors; G-AO

Epoxy Coating Materials; G-AO

Non-metallic Abrasive; G-AO

Metallic Abrasive; G-AO

SD-08 Manufacturer's Instructions

Coating System Instructions

SD-11 Closeout Submittals

Disposal of Used Abrasive; G-AO

Inspection Logbook

## 1.4 QUALITY ASSURANCE

### 1.4.1 Design Data

#### 1.4.1.1 Environmental Control System

Submit design details of the proposed environmental control system to include ventilation, humidity control, and temperature regulation. Provide calculations for humidity control during separate surface preparation and coating application procedures, ventilation requirements during coating application, and maximum allowable coating application rates to coincide with ventilation. Include basis of design data on local conditions. Provide equipment layout sketches and procedures showing function of each piece of equipment and fail-safe measures. A Certified Industrial Hygienist shall approve calculations, work procedures and personal protective equipment. See Section 01400 Special Safety Requirements for Accident Prevention Plan and Activity Hazard Analysis requirements. The Certified Industrial Hygienist shall review and approve all portions of these plans pertaining to painting activities, including confined space entry requirements. Provide a signature page with health and safety documents, indidicating the Certified Industrial Hygienist's approval of the work procedures and equipment for painting tasks.

### 1.4.2 Test Reports

#### 1.4.2.1 Recycled Metallic Abrasive Field Test Reports (Daily and Weekly)

Submit test results from independent laboratory of daily and weekly Quality Control testing required by SSPC AB 2.

1.4.3 Certificates

1.4.3.1 Work Plan

Submit a written plan describing in detail all phases of the coating operations. Address work sequencing, surface preparation, coating application, recoat and cure time projections, as well as how each step will be controlled, tested, and evaluated. Describe process of determining the existing surface profile under paint, and procedures for ensuring that the profile is not increased beyond the maximum profile specified herein. Describe equipment and methods used to measure tank temperatures and humidity. Provide detailed procedures, including manufacturer's instructions, for repairing defects in the coating film such as runs, drips, sags, holidays, overspray, etc. Address safety measures, work scheduling based on expected weather condition extremes, and record keeping. Describe method of floating pan installation after tank lining has been applied and cured, how the coated floor and shell surfaces will be protected during pan installation, and how damaged coating will be repaired after pan installation.Describe how the floating pan will be protected, and procedures for evaluating and repairing damage to pan. The floating pan shall not be used as staging or as a work platform.

1.4.3.2 Qualifications of Certified Industrial Hygienist (CIH)

Submit name, address, telephone number, FAX number, and e-mail address of the independent third party CIH. Submit documentation that hygienist is certified by the American Board of Industrial Hygiene in comprehensive practice, including certification number and date of certification/recertification. Provide evidence of experience with hazards involved in industrial coating application work.

1.4.3.3 Qualifications of Testing Laboratory for Coatings

Submit name, address, telephone number, FAX number, and e-mail address of the independent third party laboratory selected to perform testing of coating samples for compliance with specification requirements. Submit documentation that laboratory is regularly engaged in testing of paint samples for conformance with specifications, and that employees performing testing are qualified.

1.4.3.4 Qualifications of Testing Laboratory for Abrasive

Submit name, address, telephone number, FAX number, and e-mail address of the independent third party laboratory selected to perform testing of abrasive for compliance with specification requirements. Submit documentation that laboratory has experience in testing samples of abrasive for conformance with specifications, and that employees performing testing are qualified.

1.4.3.5 Qualifications of Coating Contractors

All contractors and subcontractors that perform surface preparation or coating application shall be certified by the Society for Protective Coatings (formerly Steel Structures Painting Council) (SSPC) to the requirements of SSPC QP 1 prior to contract award, and shall remain certified while accomplishing any surface preparation or coating application. The painting contractors and painting subcontractors must remain so certified for the duration of the project. If a contractor's or subcontractor's certification expires, the firm will not be allowed to

perform any work until the certification is reissued. Requests for extension of time for any delay to the completion of the project due to an inactive certification will not be considered and liquidated damages will apply. Notify the Contracting Officer of any change in contractor certification status.

Submit the name, address, telephone number, FAX number, and e-mail address of the contractor that will be performing all surface preparation and coating application. Submit evidence that key personnel have successfully performed surface preparation and application of tank linings in welded petroleum storage tanks on a minimum of three separate projects within the past three years. List information by individual and include the following:

a. Name of individual and proposed position for this work.

b. Information about each previous assignment in a welded petroleum storage tank including:

Position or responsibility
Employer (if other than the Contractor)
Name of tank owner
Mailing address, telephone number, and telex number (if non-US) of tank owner
Name of individual in tank owner's organization who can be contacted as a reference
Location, size and description of tank
Dates work was carried out
Description of work carried out in tank

1.4.3.6 Epoxy Coating Materials

Provide manufacturer's certification that the epoxy lining materials meet Mil Std 24441, Mil Std 24441/29 and Mil Std 24441/31.

1.4.3.7 Non-metallic Abrasive

Provide manufacturer's certification that the materials meet MIL-A-22262 Abrasive Blasting Media Ship Hull Blast Cleaning.

1.4.3.8 Metallic Abrasive

Provide manufacturer's certification of conformance to contract requirements and provide copies of test results.

1.4.4 Product Data

1.4.4.1 Coating System Instructions

Submit manufacturer's printed instructions including detailed mixing and application procedures, number and types of coats required, minimum and maximum application temperatures, and curing procedures. Include Materials Safety Data Sheets (MSDS) for materials to be used at the job site in accordance with 29 CFR 1926.59.

1.5 DELIVERY AND STORAGE

Ship, store, and handle materials in accordance with SSPC PA 1, and as modified in this Section. Maintain temperature in storage spaces between 40 and 75 degrees F, and air temperature more than 5 degrees F above the dew-point at all times. Inspect materials for damage prior to use and

return non-compliant materials to manufacturer. Remove materials with expired shelf life from government property immediately and notify the Contracting Officer. Expired materials may be returned to manufacturer, tested, and if compliant, issued a shelf life extension.

## 1.6 COATING HAZARDS

Ensure that employees are trained in all aspects of the approved Accident Prevention plan. Specified coatings may have potential health hazards if ingested or improperly handled. The coating manufacturer's written safety precautions shall be followed throughout mixing, application, and curing of the coatings. During tank cleaning, cleanup, surface preparation, and paint application phases, ensure that employees are protected from toxic and hazardous chemical agents which exceed concentrations in 29 CFR 1910.1000. Comply with respiratory protection requirements in 29 CFR 1910.134. The CIH shall approve work procedures and personal protective equipment as outlined in the Accident Prevention plan.

## 1.7 WORK SEQUENCE

Coat tank interior before installation of floating pan.

## 1.8 JOB SITE REFERENCES

Make available to the Contracting Officer at least one copy each of API Std 653, ASTM D 3276, ASTM D 3925, ASTM D 4285, ASTM D 4417, NACE RP0178 and companion visual comparator, NACE RP0188, SSPC SP COM, SSPC SP 1, SSPC SP 7, SSPC SP 5, SSPC PA 1, SSPC PA 2, SSPC Guide 12, SSPC Guide to VIS 1, SSPC VIS 1, and an SSPC Certified Contractor Evaluation Form at the job site.

## 1.9 PRE-APPLICATION MEETING

After approval of submittals but prior to the initiation of coating work, Contractor representatives, including at a minimum, project superintendent and QC manager, paint foreman, Contracting Officer representatives, coating inspector, shall have a pre-application coating preparatory meeting. This meeting shall be in addition to the pre-construction conference. Specific items addressed shall include: work plan, safety plan, inspection standards, inspector qualifications and tools, test procedures, environmental control system, safety plan, and test logs. Notify Contracting Officer at least ten days prior to meeting.

# PART 2 PRODUCTS

## 2.1 COATING SYSTEM

Alternate systems or products will not be considered. All primer, intermediate, and topcoat materials shall be manufactured by one manufacturer. The entire coating system is intended to be applied in the field. Alternatively, surface preparation may be accomplished in the shop, following all temperature, humidity, and testing requirements listed herein, followed by an application of a hold-primer. Upon completion of field fabrication, all shop-applied coatings shall be removed, surfaces prepared to SSPC SP 5, and the specified coating system applied. Adjust all shop preparation to avoid conflicts with final surface preparation requirements.

### 2.1.1 Epoxy Primer, Intermediate, and Topcoats

The epoxy coating materials shall meet the following Military and Federal

standards.

2.1.1.1 Epoxy Primer Coat

Epoxy polyamide, MIL-DTL-24441/29 (Formula 150, Type IV, Green).

2.1.1.2 Epoxy Intermediate Coat

Epoxy polyamide, MIL-DTL-24441/31 (Formula 152, Type IV, White (Tinted)). Tint to approximately FED-STD-595 color number 27778 parchment using pigment dispersions prepared for epoxy paint tinting. Manufacturer shall tint material and appropriately label. All other requirements of this Military Specification apply.

2.1.1.3 Epoxy Topcoat

Epoxy polyamide, MIL-DTL-24441/31 (Formula 152, Type IV, White).

2.2 COATING SAMPLE COLLECTION AND SHIPPING KIT

Provide a kit that contains one quart can for the base of each coating material, an appropriately sized can for each activator, dipping cups for each component to be sampled, a shipping box sized for the samples to to be shipped, and packing material. Mark cans for the appropriate component. Provide shipping documents, including either pre-paid shipping or a shipper number that can be used by the Contracting Officer to arrange pickup, addressed to the approved coating testing laboratory.

2.3 ABRASIVE SAMPLE COLLECTION AND SHIPPING KIT

Provide a kit that contains one suitable plastic bag or container for each sample to be collected. Mark containers for the appropriate component. Provide shipping documents, including either pre-paid shipping or a shipper number that can be used by the Contracting Officer to arrange pickup, addressed to the approved coating testing laboratory.

2.4 SOLUBLE SALTS TEST KITS

2.4.1 Test Kit for Measuring Chlorides on Steel Surfaces

Provide test kits called CHLOR*TEST, as manufactured by CHLOR*RID International Inc. of Chandler, Arizona (www.chlor-rid.com) or equal. An "equal" test kit shall meet the following requirements:

a. Kit contains all materials,supplies, tools and instructions for field testing and on-site quantitative evaluation;

b. Kit extract solution is acidic, factory pre-measured, pre-packaged, and of uniform concentration;

c. Kit components and solutions are mercury free and environmentally friendly;

d. Kit contains a factory sealed titration device;

e. Kit contains new materials and solutions for each test;

f. Test container (vessel, sleeve, cell. etc.) creates a sealed, encapsulated environment during chloride ion extraction;

g. Test container is suitable for testing the following steel surfaces: horizontal (up/down configuration), vertical, flat, curved, smooth, pitted, and rough;

h. Kit uses test container, with resulting chloride ion extract solution, as the titration container;

i. Chloride ion concentration is directly measured in micrograms per square centimeter without using either conversion charts or tables.

## 2.5 ABRASIVE

The referenced abrasive specifications have maximum limits for soluble salts contamination, however, this maximum level of contamination does not guarantee that contamination will not be transferred to the steel surface during abrasive blasting. Other factors such as on-site handling and recycling can allow contamination of abrasive. Contractors are cautioned to verify that the chosen abrasive, along with work and storage processes, allow the final surface cleanliness requirements to be achieved. Successful testing of chlorides in abrasive does not negate the final acceptance testing of steel surfaces.

### 2.5.1 Non-metallic Abrasive

Conform to MIL-A-22262, Type I (Inorganic materials) except that the gross gamma radioactivity shall not exceed 5 picocuries per gram. Use sampling procedures and testing frequencies as prescribed in MIL-A-22262. Use abrasive that is specifically selected and graded to provide a sharp, angular profile to the specified depth. Do not use ungraded abrasive. Make adjustments to processes or abrasive gradation to achieve specified surface profile. Recycled non-metallic abrasive shall meet all requirements of the specification each time that it is placed in the blast pot.

### 2.5.2 Metallic Abrasive

#### 2.5.2.1 New and Remanufactured Steel Grit

Conform to the chemical and physical properties of SSPC AB 3 except that the gross gamma radioactivity shall not exceed 5 picocuries per gram.

#### 2.5.2.2 Recycled Steel Grit

Conform to the chemical and physical properties of SSPC AB 2

# PART 3 EXECUTION

## 3.1 COATING AND ABRASIVE SAMPLE COLLECTION AND TESTING

### 3.1.1 Coating Sample Collection

Notify Contracting Officer three days in advance of sampling. The Contracting Officer and either the QC Manager or NACE Coating Inspector shall witness all sampling. Provide a sample collection kit as required in Article entitled "Coating Sample Collection and Shipping Kit." Obtain a one quart sample of each batch of each base material, and proportional samples of each activator based on mix ratio, by random selection from sealed containers in accordance with ASTM D 3925. Prior to sampling, mix contents

of each sealed container to ensure uniformity. A batch is defined as that quantity of material processed by the manufacturer at one time and identified by number on the label. Identify samples by designated name, specification number, batch number, project contract number, sample date, intended use, and quantity involved. The Contracting Officer will take possession of the packaged samples, contact the shipping company to arrange for pickup, and relinquish the samples only to the shipping representative for shipment to the approved laboratory for testing as required by the paragraph entitled "Coating Sample Testing."

3.1.2 Abrasive Sample Collection

Notify Contracting Officer three days in advance of sampling. The Contracting Officer and either the QC Manager or NACE Coating Inspector shall witness all sampling. Provide suitably sized containers for each sample to be taken. Provide a sample collection kit as required in Article entitled "Abrasive Sample Collection and Shipping Kit." For purposes of quality conformance inspection, a lot shall consist of all abrasive materials of the same type from a single, uniform batch produced and offered for delivery at one time. Obtain samples of each abrasive lot using the sampling techniques and schedule of MIL-A-22262. The addition of any substance to a batch shall constitute a new lot. Identify samples by designated name, specification number, lot number, project contract number, sample date, intended use, and quantity involved. The Contracting Officer will take possession of the packaged samples, contact the shipping company to arrange for pickup, and relinquish the samples only to the shipping representative for shipment to the approved laboratory for testing as required by the Article entitled "Abrasive Sample Testing."

3.1.3 Coating Sample Test Reports

Test samples of all primer, intermediate, and topcoat materials for compliance with requirements of Table I. Reject entire batch represented by samples that fail one or more tests, reselect, and retest samples.

3.1.4 Abrasive Sample Test Reports

Test samples of abrasive materials for compliance with the appropriate abrasive specification. Reject entire lot represented by samples that fail one or more tests, reselect, and retest samples.

3.2 LIGHTING

Provide lighting for all work areas as prescribed in SSPC Guide 12.

3.3 ENVIRONMENTAL CONDITIONS

3.3.1 Control System Requirements

Provide and utilize dehumidification and ventilation equipment to control humidity, temperature, and vapor levels in tank from beginning of abrasive blasting through coating application and for four days after the last coating is applied. System shall maintain vapor concentrations at or below 10 percent of Lower Explosive Limit (LEL). System may incorporate any combination of solid desiccant and direct expansion refrigeration equipment. No liquid, granular, calcium chloride, or lithium chloride drying systems will be accepted. Use only electric, indirect fired combustion, indirect friction, or steam coil auxiliary heaters. System shall be compatible with removal of dust and solvent vapors, and shall have

fail-safe measures to ensure reliability during operations.

3.3.1.1 Humidity Control for Surface Preparation and Primer Application

Provide and utilize dehumidification equipment to maintain relative humidity at appropriate level to prevent prepared steel surfaces from corroding at all times during abrasive blasting through primer application. Failure of humidity control system, or failure to maintain proper conditions, during surface preparation stage may allow surface rusting, which will be rejected and require rework. All surfaces to be coated must meet all requirements of SSPC SP 5 at time of primer application. Failure of humidity control system during primer application stage will be cause for removal and replacement of all materials applied and cured while conditions were not as prescribed above.

3.3.1.2 Humidity Control for Application of Intermediate and Topcoats and Initial Curing

Provide and utilize dehumidification equipment to maintain relative humidity near the coldest steel surface in tank below 55 percent at all times during coating application, and during the first four days of initial curing after application of topcoat. This measurement is not the same as measuring the relative humidity of ambient air in the tank, and will require either electronic equipment to monitor relative humidity at the steel surface, or complex calculations to convert relative humidity of air in tank to relative humidity at steel surface. An approved alternative method of monitoring dehumidification that requires less sophisticated equipment or calculations is to maintain a minimum dew point depression of 18 degrees F below coldest steel surface temperature. This is in lieu of specific relative humidity and dew point requirements in this Section. Failure to maintain specified humidity control during this phase will be cause for extension of humidity controlled cure time to ensure four consecutive days at specified relative humidity at steel surfaces. Formation of condensation in coating application stage prior to the indicated dry-hard time will be cause for removal and replacement of all materials contacted by condensation.

3.4 EQUIPMENT USED IN TANK

Equipment used in the tank after surface preparation begins shall not leave any oily residue from exhaust or other sources. Internal combustion driven equipment, other than that powered by natural or bottled gas, shall not be used.

3.5 SURFACES TO BE COATED

Prepare and coat all new or modified interior tank surfaces, including FLOOR, SHELL ,CEILING and internal piping where required. Do not coat aluminum floating pan.

Areas between the underside of the tank roof and the top surface of the rafters shall be coated. Contractor will be allowed to insert small wooden blocks between the roof and the rafters, sandblast the area and then apply the coating. After the coating has dried, remove the blocks to allow the blocked areas to be sandblasted, coated and dried. The area between the underside of the tank and the rafters ranges between unaccessable to accessable, thickness of coating system and surface preparation will vary in this region. Coordinate any variances with the Contracting Officer for the unaccessable area identified.

## 3.6 SURFACE PREPARATION

### 3.6.1 Abrasive Blasting Equipment

Use abrasive blasting equipment of conventional air, force-feed, or pressure type. Maintain a minimum pressure of 95 psig at nozzle. Confirm that air supply for abrasive blasting is free of oil and moisture when tested in accordance with ASTM D 4285. Test air quality at each startup, but in no case less often than every five operating hours.

### 3.6.2 Surface Standard

Inspect surfaces to be coated, and select plate with similar properties and surface characteristics for use as a surface standard. Blast clean one or more 1 foot square steel panels as specified in Article entitled "Surface Preparation." Record blast nozzle type and size, air pressure at nozzle and compressor, distance of nozzle from panel, and angle of blast to establish procedures for blast cleaning. Measure surface profile in accordance with ASTM D 4417. When the surface standard complies with all specified requirements, seal with a clearcoat protectant. Use the surface standard for comparison to abrasive blasted surfaces throughout the course of work.

### 3.6.3 Pre-Preparation Testing for Surface Contamination

Perform testing, abrasive blasting, and testing in the prescribed order.

#### 3.6.3.1 Pre-Preparation Testing for Oil and Grease Contamination

Inspect all surfaces for oil and/or grease contamination using two or more of the following inspection techniques: 1) Visual inspection, 2) WATER BREAK TEST, 3) BLACK LIGHT TEST, and 4) CLOTH RUB TEST. Reject oil and/or grease contaminated surfaces, clean using a water based pH neutral degreaser in accordance with SSPC SP 1, and recheck for contamination until surfaces are free of oil and grease.

WATER BREAK TEST - Spray atomized mist of distilled water onto surface, and observe for water beading. If water "wets" surface rather than beading up, surface can be considered free of oil or grease contamination. Beading of water (water forms droplets) is evidence of oil or grease contamination.

BLACK LIGHT TEST - Inspect surfaces for oil and grease contamination using the light specified in the Article entitled "Black Light." Use light no more than 15 inches from surface unless testing indicates that the specific oil or grease found in tank fluoresce at a greater distance. Use light in tank that is completely sealed from light infiltration, under a hood, or at night. Any fluorescing on steel surfaces is indication of petroleum oil/grease contamination. Use either WATER BREAK TEST or CLOTH RUB TEST to confirm both contaminated and non-contaminated areas detected by BLACK LIGHT TEST. The BLACK LIGHT TEST may not be used during inspection of prepared surfaces for oil and grease contamination unless proven to fluoresce the oil and/or grease found in the specific tank and documented during testing prior to abrasive blasting. Generally, only petroleum oil/grease will fluoresce, however, some may not fluoresce sufficiently to be recognized and other methods, such as the WATER BREAK TEST or CLOTH RUB TEST, must be used to confirm findings of the BLACK LIGHT TEST.

CLOTH RUB TEST - Rub a clean, white, lint free, cotton cloth onto surface

and observe for discoloration. To confirm oil or grease contamination in lightly stained areas, a non-staining solvent may be used to aid in oil or grease extraction. Any visible discoloration is evidence of oil or grease contamination.

3.6.3.2 Pre-Preparation Testing for Soluble Salts Contamination

Test surfaces for soluble salts, and wash as required, prior to abrasive blasting. Soluble salt testing is also required in Article entitled "Pre-Application Testing for Soluble Salts Contamination" as a final acceptance test of prepared surfaces after abrasive blasting, and successful completion of this phase does not negate that requirement. This phase is recommended since pre-preparation testing and washing are generally more advantageous than attempting to remove soluble salt contamination after abrasive blasting. Effective removal of soluble salts will require removal of any barrier to the steel surface, including rust. This procedure may necessitate combinations of wet abrasive blasting, high pressure water rinsing, and cleaning using a solution of water washing and soluble salts remover. The soluble salts remover shall be acidic, biodegradable, nontoxic, noncorrosive, and after application, will not interfere with primer adhesion. Delays between testing and preparation, or testing and coating application, may allow for the formation of new contamination. Use potable water, or potable water modified with soluble salt remover, for all washing or wet abrasive blasting. Test methods and equipment used in this phase are selected at the Contractor's discretion.

3.6.4 Abrasive Blasting

Abrasive blast steel surfaces to white metal in accordance with SSPC SP 5. Prepared surfaces shall conform to SSPC VIS 1 and SSPC Guide to VIS 1 and shall match the prepared test-panels. Provide a 2 to 3 mil surface profile. Reject profile greater than 3 mils, discontinue abrasive blasting, and modify processes and materials to provide the specified profile. Measure surface profile in accordance with ASTM D 4417. Measure profile at rate of three tests for the first 1000 square feet plus one test for each additional 1000 square feet or part thereof. Provide two additional measurements for each non-compliant measurement. When surfaces are reblasted for any reason, retest profile as specified. If Method C of ASTM D 4417 is used to measure profile, attach test tapes to Daily Inspection Reports. Following abrasive blasting, remove dust and debris by vacuum cleaning.

3.6.5 Disposal of Used Abrasive

Dispose of used abrasive off Government property in accordance with Federal, State and Local mandated regulations.

3.6.6 Pre-Application Testing For Surface Contamination

3.6.6.1 Pre-Application Testing for Oil and Grease Contamination

Ensure tank surfaces are free of contamination as described in Article entitled "Pre-Preparation Testing for Oil and Grease Contamination."

3.6.6.2 Pre-Application Testing for Soluble Salts Contamination

Test surfaces for chloride contamination using the Test Kit described in article entitled "Test Kit for Measuring Chlorides on Steel Surfaces." Test all surfaces at rate of three tests for the first 1000 square feet plus one

test for each additional 2000 square feet or part thereof. Perform 30% of tests on bare steel at welds, divided equally between horizontal and vertical welds. One or more readings greater than 3 micrograms per square centimeter of chlorides is evidence of chloride contamination. Reject contaminated surfaces, wash as discussed in article entitled "Pre-Preparation Testing for Soluble Salts Contamination," allow to dry, and re-test until all required tests show allowable results. Reblast tested areas using vacuum equipped blast equipment. Label all test tubes and retain for test verification.

3.6.6.3 Pre-Application Testing for Surface Cleanliness

Apply coatings to dust free surfaces. To test surfaces, apply strip of clear adhesive tape to surface and rub onto surface with finger. When removed, the tape should show little or no dust, blast abrasive, or other contaminant. Reject contaminated surfaces, clean by vacuum cleaning, and retest. Test surfaces at rate of three tests for the first 1000 square feet plus one test for each additional 1000 square feet or part thereof. Provide two additional tests for each failed test or questionable test. Attach test tapes to Daily Inspection Reports.

3.7 MIXING AND APPLICATION OF SEALANT AND COATING SYSTEM

3.7.1 Preparation of Sealant and Coating Materials for Application

Each of the different products, sealant, primer, intermediate, and topcoat, is a two-component material supplied in separate containers.

3.7.1.1 Mixing

Mix in accordance with manufacturer's instructions, which may differ for each product. Do not mix partial kits, or alter mix ratios. Mix materials in same temperature and humidity conditions specified in article entitled "Delivery and Storage." Allow mixed material to stand for the required induction time based on its temperature.

3.7.1.2 Pot Life

Apply mixed products within stated pot life for each product. Stop applying when material becomes difficult to apply in a smooth, uniform wet film. Do not add solvent to extend pot life. Add all required solvent at time of mixing. Pot life is based on standard conditions at 70 degrees F and 50 percent relative humidity. For every 18 degrees F rise in temperature, pot life is reduced by approximately half, and for every 18 degrees F drop, it is approximately doubled. Usable pot life depends on the temperature of the material at the time of mixing and the sustained temperature at the time of application. Other factors such as the shape of the container and volume of mixed material may also affect pot life. In hot climates, precooling or exterior icing of components for at least 24 hours to a minimum of 50 degrees F will extend pot life. Following are approximate pot life times:

| | |
|---|---|
| Sealant | As specified by manufacturer |
| Epoxy Primer and Intermediate Coat Materials | 4 hours |

3.7.1.3 Application Conditions and Recoat Windows

The application condition requirements for the coating system are very time and temperature sensitive, and are intended to avoid the delamination

problems frequently found on industrial structures. Plan coating application to ensure that specified temperature, humidity, and condensation conditions are met. If conditions do not allow for orderly application of sealant, primer, stripe coat, intermediate coat and topcoat, use appropriate means of controlling air and surface temperatures, as required. Partial or total enclosures may be required, as well as other measures, to control conditions to allow for orderly application of all required coats.

Apply coating only when steel and internal air temperatures are between 60 and 100 degrees F. Do not apply coatings above 100 degrees F or below 60 degrees F.

Use Table entitled "RECOAT WINDOWS" to determine appropriate recoat windows for each coat after the initial coat. Apply each coating during appropriate RECOAT WINDOW.

If coating is not applied during RECOAT WINDOW, apply during EXTENDED RECOAT WINDOW. Application of any epoxy coat within the EXTENDED RECOAT WINDOW requires application of a TACK COAT prior to applying any full coat. Perform CURE TEST immediately prior to application of TACK COAT to determine condition of applied coating. If CURE TEST indicates that surface is fully cured, provide GLOSS REMOVAL prior to application of TACK COAT.

If coating is not applied during EXTENDED RECOAT WINDOW, or if surface temperature exceeds 120 degrees F between applications, provide GLOSS REMOVAL, apply TACK COAT, where applicable, within 24 hours, and apply next full coat within TACK COAT RECOAT WINDOW.

RECOAT WINDOWS

| Temperature degrees F | 60-70 | 71-80 | 81-90 | 91-100 | 101-110 | 111-120 |
|---|---|---|---|---|---|---|
| RECOAT WINDOW (Hrs.) | 24-72 | 18-60 | 16-48 | 12-36 | 8-18 | 4-6 |
| EXTENDED RECOAT WINDOW (Hrs.) | 72-168 | 60-140 | 48-120 | 36-96 | 18-36 | 6-12 |
| TACK COAT RECOAT WINDOW (Hrs.) | 6-72 | 4-60 | 4-48 | 3-36 | 2-18 | 1-6 |

The temperature ranges shown in the table above are for determining recoat windows. Choose recoat window based on the highest surface temperature that was sustained for one or more hours between coats. This applies to the entire time between coats. Measure and record air and surface temperatures on hourly basis to determine appropriate recoat windows. If surface temperature goes above 100 degrees F, measure and record temperatures every half hour.

CURE TEST - Where indicated, test surface for cure using high-flash aromatic Naphtha only (cas #64742-95-6). Do not use aliphatic VMP Naphtha. Wipe surface with rag saturated with Naphtha, and check for surface tackiness, loss of gloss, or other indications that solvent has softened surface. If softening is found on 95% of test sites, this is indication that coating has not fully cured, and GLOSS REMOVAL is not required if TACK COAT is applied within three hours and full coat is applied within the TACK COAT RECOAT WINDOW. Test surfaces at rate of three tests for the first 1000 square feet plus one test for each additional 1000 square feet or part thereof.

TACK COAT - Where indicated, apply coat of intermediate coat epoxy, at 1 to 2 mils WFT, then apply next specified full coat within TACK COAT RECOAT WINDOW. Thin TACK COAT material approximately 25% by volume, using appropriate epoxy thinner.

GLOSS REMOVAL - Where indicated, remove all gloss by hand sanding, in a linear fashion, with 150-200 grit wet/dry sandpaper, followed by a solvent wiping with a clean rag soaked with denatured alcohol to remove dust. Do not use rotary sanders or grinders.

3.7.2 Application of Coating System

Apply coatings in accordance with SSPC PA 1 and as specified herein. Apply sealant and coatings to surfaces that meet all stated surface preparation requirements.

After application of primer coat and prior to application of each subsequent coat, perform testing prescribed in article entitled "Pre-Application Testing For Surface Contamination," as necessary, to ensure minimal intercoat contamination. This testing may be reduced to one half of the prescribed rate for bare steel if the testing indicates no contamination when sampling is evenly distributed over surfaces being tested. If contamination is found between coats, revert to the specified testing rate. Generally, oil and grease contamination and soluble salts contamination are not encountered if subsequent coats are applied within specified recoat windows and the quality of air entering tank is controlled. Concern for intercoat contamination should be continually prevalent, and spot testing should be accomplished to verify satisfactory conditions. Where visual examination or spot testing indicates contamination, perform sufficient testing to verify non-contamination, or to define extent of contamination for appropriate treatment.

Apply each coat in a consistent wet film, at 90 degrees to previous coat. Ensure that primer and intermediate coat "cold joints" are no less than six inches from welds. Apply stripe coat by brush. Apply all other coats by spray application. Use appropriate controls to prevent airborne coating fog from drifting beyond 15 feetfrom the tank perimeter. The cleanliness, temperature, recoat windows, and airborne paint containment requirements may necessitate the use of portable shelters or other appropriate controls.

Apply coatings at the following specified thickness:

| Coat | Desired Thickness Range Mils DFT | Minimum Mils DFT | Maximum Mils DFT |
|---|---|---|---|
| Primer | 3 - 5 | 3 | 8 |
| Intermediate | 3 - 5 | 3 | 8 |
| Top | 3 - 5 | 3 | 8 |
| Total system | ----- | 9 | 20 |

Measure coating thickness in accordance with SSPC PA 2 to confirm that coating application is within the specified range and within the tolerances of that standard. For non-compliant areas, increase number of test areas to identify all non-compliant application as required by SSPC PA 2. Add coating as required to correct underuns, and remove coating with excess thickness to bare steel and reapply as specified in Article entitled "Procedure for Holiday and Spot Repairs of Newly Applied Coating."

3.7.2.1 Application of Stripe Coat

Apply stripe coat of epoxy primer material prior to application of general primer coat on CEILING and SHELL. Apply stripe coat of epoxy intermediate coat material after application of general primer coat on FLOOR. Apply stripe coat by brush, working the material into corners, crevices, pitted areas, and welds, and onto outside corners and angles. At roof-to-rafter joints , use appropriate application tools to provide "best effort" coating of all exposed steel surfaces in the gap. Mini-rollers or other tools may be required.

3.7.2.2 Application of Primer

Apply primer coat within RECOAT WINDOW of stripe coat.

3.7.2.3 Application of Intermediate Coat

Apply intermediate coat within RECOAT WINDOW of primer coat.

3.7.2.4 Application of Topcoat

Apply topcoat within RECOAT WINDOW of intermediate coat.

3.7.3 Holiday Testing

No sooner than 48 hours after application of the topcoat, perform holiday testing in accordance with the low voltage wet sponge method of NACE RP0188. Repair holidays per paragraph entitled "Procedure for Holiday and Spot Repairs of Newly Applied Coating." .

3.7.4 Procedure for Holiday and Spot Repairs of Newly Applied Coating

Repair coating film defects at the earliest practicable time, preferably before application of the succeeding coat. Observe all requirements for soluble salts contamination, cleanliness between coats, and application conditions. Prepare defective area in accordance with SSPC SP 5, and feather coating as required to leave 4 inches of each succeeding coat feathered and abraded. Do not abrade the polyurethane topcoat. Protect adjacent areas from damage and overspray. Remove dust and solvent wipe the prepared area plus an additional 4 inches beyond the prepared area with clean denatured alcohol. Apply each coat within RECOAT WINDOW of preceeding coat. Within four hours of preparation, apply primer to prepared steel and feather onto prepared primer. Apply intermediate coat to primed area and feather to prepared intermediate area. Apply topcoat to intermediate coat and feather to prepared topcoat. Apply each repair coat to approximate thickness of surrounding coating system. If one percent or more of the total surface area, or more than one spot per 2000 square feet, of the FLOOR area requires repair to any coat or coats, including feathered areas, the entire FLOOR coating system shall be removed and reapplied. If 5 percent or more of the total surface area, or more than one spot per 1000 square feet, of the CEILING area requires repair to any coat or coats, including feathered areas, the entire CEILING coating system shall be removed and reapplied. Repairs on the SHELL are not limited.

3.7.5 Tank Occupancy After Coating Application

Use clean canvas, or other approved, shoe covers when walking on coated surfaces, regardless of curing time allowed. For heavily trafficked areas, provide cushioned mats for additional protection.

### 3.7.6 Extended Cure of Coating System Prior to Immersion Service

Allow a cure time of at least 14 days after the final coating material has been applied before introducing water or fuel into tank.

## 3.8 FIELD TESTS AND INSPECTION

For marking of tank surfaces, use chalk for marking bare steel, and water based markers for marking coated surfaces, and remove marks prior to coating. Do not use any wax or grease based markers, or any other markers that leave a residue or stain.

### 3.8.1 Coating Inspector

The coating inspector shall work for the CQC Manager in accordance with Section 01451 CONTRACTOR QUALITY CONTROL. The Coating Inspector shall be present during all pre-preparation testing, surface preparation, coating application, initial cure of the coating system, and during all coating repair work. The Coating Inspector shall provide complete documentation of conditions and occurrences on the job site, and be aware of conditions and occurrences that are potentially detrimental to the coating system. The requirements for inspection listed in this Section are in addition to the QC inspection and reporting requirements outlined in Section 01451, "Quality Control." The Coating Inspector shall prepare a project reference sheet outlining all requirements, tests, test methods, and evaluation criteria, and hold regular meetings with contractor personnel, including nozzlemen and applicators, to review requirements and evaluation criteria for upcoming work in advance of the work.

### 3.8.2 Field Inspection

#### 3.8.2.1 Inspection Requirements

Accomplish field inspection in accordance with ASTM D 3276 and as required herein. Perform all appropriate tests and inspections, except that viscosity and weight per gallon measurements are not required. Provide all tools and instruments required to perform the required testing, as well as any tools or instruments that the inspector considers necessary to perform the required inspections and tests. Document each inspection and test, including required hold points and other required inspections and tests, as well as those inspections and tests deemed prudent from on-site evaluation, as follows:

a. Location or area;
b. Purpose (required or special);
c. Method;
d. Criteria for evaluation;
e. Results;
f. Determination of compliance;
g. List of required rework;
h. Observations.

Collect and record Environmental Conditions as described in ASTM D 3276 on a 24 hour basis, as follows:

a. During surface preparation, every two hours or when changes occur;
b. During coating application and the first four days of initial cure, every hour, or when changes occur;

c. Overnight hours may be excluded if conditions are measured and recorded through 1800 hours and then prior to dawn the next day;
d. Note location, time, and temperature of the highest and lowest surface temperatures each day.
e. Use a non-contact thermometer to locate temperature extremes, then verify with contact thermometers.

Document all equipment used in inspections and testing, including manufacturer, model number, serial number, last calibration date and future calibration date, and results of on-site calibration performed.

3.8.2.2 Daily Inspection Reports

Submit one copy of daily inspection report completed each day when performing work under this Section, to the Contracting Officer. Use ASTM D 3276 Appendix X1 Inspection Checklist to monitor daily activity and prepare Daily Inspection Report. Use of forms containing entry blocks for all required data is encouraged. The data may be in any format, but must be legible and presented so that it can be easily interpreted. Note all non-compliance issues, and all issues that were reported for rework in accordance with QC procedures of Section 01451, "Quality Control." Submit report within 24 hours of date recorded on the report.

3.8.2.3 Inspection Logbook

A continuous record of all activity related to this Section shall be maintained in an Inspection Logbook on a daily basis. The logbook shall be hard or spiral bound with consecutively numbered pages, and shall be used to record all information provided in the Daily Inspection Reports, as well as other pertinent observations and information. The Coating Inspector's Logbook that is sold by NACE is satisfactory. Submit the original Inspection Logbook to the Contracting Officer upon completion of the project and prior to final payment.

3.8.3 Inspection Equipment

All equipment shall be in good condition, operational within its design range, and calibrated as required by the specified standard for use of each device.

3.8.3.1 Black Light

Use a black light having a 365 nanometer intensity of 4,000 microwatts per square centimeter minimum at 15 inches. The Spectroline BIB-150P from Spectronics Corporation satisfies this requirement.

3.8.4 Hold Points for Quality Control Inspections

Provide appropriate QC inspections at the following hold-points:

| Step | Action |
|---|---|
| Prior to preparation of tank(s) for cleaning and repair | Safety inspection |
| After cleaning of tank(s) and prior to abrasive blasting | 1. Safety inspection, removal of dirt, trash, debris, and any hindrance to abrasive blasting. |

| | |
|---|---|
| | 2. Surface inspection for oil, grease, soluble salts, and other contaminants |
| Initiation of abrasive blasting, and at each work stoppage | 1. Confirm environmental conditions are suitable for abrasive blasting and for holding the blast. |
| | 2. Surface inspection to insure all aspects of surface preparation are properly addressed, as specified in article entitled "Surface Preparation." |
| | 3 . Test compressor air for oil and water contamination |
| After abrasive blasting | Surface inspection to insure all aspects of surface preparation are properly addressed, as specified in article entitled "Surface Preparation." |
| Immediately prior to coating application - provide for each coating application evolution | 1. Confirm environmental conditions are suitable for abrasive blasting and for holding the blast as specified in article entitled "Environmental Conditions" |
| | 2. Surface inspection to insure all aspects of surface preparation are properly addressed, as specified in article entitled "Surface Preparation." |
| | 3. Confirm that testing equipment for monitoring of hazardous conditions during coating application are working properly and are prepared for use as outlined in contractor's Confined Space Entry Plan. |
| During and after coating application. | Coating application inspection as specified in paragraphs entitled "Application of Coating System" and "Field Tests and Inspection". |
| After final cleanup | Clean-up inspection specified in the article entitled "Final Cleanup." |

## 3.9 FINAL CLEANUP

Following completion of the work, remove debris, equipment, and materials from the site. Remove temporary connections to Government or Contractor furnished water and electrical services. Restore existing facilities in and around the work areas to their original condition.

TABLE I
COATING QUALITY CONFORMANCE INSPECTION REQUIREMENTS

Table Ia. - Epoxy Primer Coat MIL-DTL-24441/29 Formula 150 Type IV (Green)

| Test | Component A | | Component B | | Mixed | |
|---|---|---|---|---|---|---|
| | Min. | Max. | Min. | Max. | Min. | Max. |
| Pigment content, percent | 45.0 | 50.0 | 35.0 | 40.0 | --- | --- |
| Volatiles, percent | 29.0 | 35.0 | 15.0 | 20.0 | --- | --- |
| Non-volatile vehicle, percent | 17.5 | 23.5 | 43.0 | 48.0 | --- | --- |
| Coarse particles, percent | --- | 0.3 | --- | 0.3 | --- | --- |
| Consistency, grams | 300 | 410 | 470 | 600 | --- | --- |
| Weight | | | | | | |
| Kilograms/liter | 1.33 | 1.39 | 1.33 | 1.39 | --- | --- |
| Pounds/gallon | 11.1 | 11.6 | 11.1 | 11.6 | --- | --- |
| Set to touch, hours at 23degrees C, 73 degrees F | --- | --- | --- | --- | --- | 3 |
| Dry-hard time, hours at 23 degrees C, 73 degrees F | --- | --- | --- | --- | --- | 6 |
| Fineness of grind, Hegman | 3 | --- | 2 | --- | --- | --- |
| Flashpoint | | | | | | |
| Degrees C | 35.5 | --- | 37.8 | --- | --- | --- |
| Degrees F | 96 | --- | 100 | --- | --- | --- |
| Titanium Dioxide, percent of pigment | 18 | --- | --- | --- | --- | --- |
| Pot life, hours at 23degrees C, 73 degrees F | --- | --- | --- | --- | 4 | --- |
| Sag resistance, | | | | | | |
| Micrometers | --- | --- | --- | --- | 300 | --- |
| Mils | --- | --- | --- | --- | 12 | --- |
| Color of dry film to approximate color of standard color chip | --- | --- | --- | --- | Conform | |
| Contrast ratio at 75 micrometers, 3 mils DFT | --- | --- | --- | --- | 0.98 | --- |
| VOC | | | | | | |
| Grams/liter | --- | --- | --- | --- | --- | 340 |
| Pounds/gallon | --- | --- | --- | --- | --- | 2.8 |

GENERAL NOTES:
Test methods as specified in MIL-DTL-24441.
Where "Conform" is indicated, refer to specific requirements of MIL-DTL-24441/29.

TABLE I
COATING QUALITY CONFORMANCE INSPECTION REQUIREMENTS

Table Ib. - Epoxy Intermediate Coat MIL-DTL-24441/31 Formula 152 Type IV (White (Tinted))

| Test | Component A | | Component B | | Mixed | |
|---|---|---|---|---|---|---|
| | Min. | Max. | Min. | Max. | Min. | Max. |
| Pigment content, percent | 44.0 | 49.0 | 33.0 | 38.0 | --- | --- |
| Volatiles, percent | 29.0 | 35.0 | 16.0 | 21.0 | --- | --- |
| Non-volatile vehicle, percent | 17.5 | 23.5 | 44.0 | 49.0 | --- | --- |
| Coarse particles, percent | --- | 0.3 | --- | 0.3 | --- | --- |
| Consistency, grams | 180 | 320 | 300 | 470 | --- | --- |
| Weight | | | | | | |
| Kilograms/liter | 1.39 | 1.45 | 1.29 | 1.35 | --- | --- |
| Pounds per gallon | 11.6 | 12.1 | 10.8 | 11.3 | --- | --- |
| Set to touch, hours at 23 degrees C, 73 degrees F | --- | --- | --- | --- | --- | 3 |
| Dry-hard time, hours at 23 degrees C, 73 degrees F | --- | --- | --- | --- | --- | 8 |
| Fineness of grind, Hegman | 4 | --- | 4 | --- | --- | --- |
| Flashpoint | | | | | | |
| Degrees C | 35.5 | --- | 37.8 | --- | --- | --- |
| Degrees F | 96 | --- | 100 | --- | --- | --- |
| Titanium dioxide, percent of pigment | 91 | --- | --- | --- | --- | --- |
| Pot life, hours at 23 degrees C, 73 degrees F | --- | --- | --- | --- | 4 | --- |
| Sag resistance | | | | | | |
| Micrometers | --- | --- | --- | --- | 300 | --- |
| Mils | --- | --- | --- | --- | 12 | --- |
| Color of dry film to approximate color of FED-STD 595 color 27778 | --- | --- | --- | --- | Conform | |
| Contrast ratio, at 75 micrometers, 3 mils DFT | --- | --- | --- | --- | 0.98 | --- |
| VOC | | | | | | |
| Grams/liter | --- | --- | --- | --- | --- | 340 |
| Pounds/gallon | --- | --- | --- | --- | --- | 2.8 |

GENERAL NOTES:
Test methods as specified in MIL-DTL-24441.
Where "Conform" is indicated, refer to specific requirements of MIL-DTL-24441/31.

TABLE I
COATING QUALITY CONFORMANCE INSPECTION REQUIREMENTS

Table Ic. - Epoxy Intermediate Coat MIL-DTL-24441/31 Formula 152 Type IV (White)

| Test | Component A | | Component B | | Mixed | |
|---|---|---|---|---|---|---|
| | Min. | Max. | Min. | Max. | Min. | Max. |
| Pigment content, percent | 44.0 | 49.0 | 33.0 | 38.0 | --- | --- |
| Volatiles, percent | 29.0 | 35.0 | 16.0 | 21.0 | --- | --- |
| Non-volatile vehicle, percent | 17.5 | 23.5 | 44.0 | 49.0 | --- | --- |
| Coarse particles, percent | --- | 0.3 | --- | 0.3 | --- | --- |
| Consistency, grams | 180 | 320 | 300 | 470 | --- | --- |
| Weight | | | | | | |
| Kilograms/liter | 1.39 | 1.45 | 1.29 | 1.35 | --- | --- |
| Pounds per gallon | 11.6 | 12.1 | 10.8 | 11.3 | --- | --- |
| Set to touch, hours at 23 degrees C, 73 degrees F | --- | --- | --- | --- | --- | 3 |
| Dry-hard time, hours at 23 degrees C, 73 degrees F | --- | --- | --- | --- | --- | 8 |
| Fineness of grind, Hegman | 4 | --- | 4 | --- | --- | --- |
| Flashpoint | | | | | | |
| Degrees C | 35.5 | --- | 37.8 | --- | --- | --- |
| Degrees F | 96 | --- | 100 | --- | --- | --- |
| Titanium dioxide, percent of pigment | 91 | --- | --- | --- | --- | --- |
| Pot life, hours at 23 degrees C, 73 degrees F | --- | --- | --- | --- | 4 | --- |
| Sag resistance | | | | | | |
| Micrometers | --- | --- | --- | --- | 300 | --- |
| Mils | --- | --- | --- | --- | 12 | --- |
| Color of dry film to approximate color of FED-STD 595 color 27778 | --- | --- | --- | --- | Conform | |
| Contrast ratio, at 75 micrometers, 3 mils DFT | --- | --- | --- | --- | 0.98 | --- |
| VOC | | | | | | |
| Grams/liter | --- | --- | --- | --- | --- | 340 |
| Pounds/gallon | --- | --- | --- | --- | --- | 2.8 |

GENERAL NOTES:
Test methods as specified in MIL-DTL-24441.
Where "Conform" is indicated, refer to specific requirements of MIL-DTL-24441/31.

-- End of Section --

SECTION TABLE OF CONTENTS

DIVISION 10 - SPECIALTIES

SECTION 10530

PRE-ENGINEERED CANOPY SYSTEMS (BID OPTION)

PART 1 GENERAL

1.1 REFERENCES
1.2 SUBMITTALS
1.3 GENERAL REQUIREMENTS
1.3.1 Qualifications
1.3.1.1 Manufacturer
1.3.1.2 Installer
1.4 DESIGN REQUIREMENTS
1.4.1 Dead Loads
1.4.2 Collateral Loads
1.4.3 Roof Live Loads
1.4.3.1 Uniform Loads
1.4.3.2 Concentrated Loads
1.4.4 Roof Snow Loads
1.4.5 Wind Loads
1.4.6 Seismic Loads
1.4.7 Foundations
1.4.8 Framing and Structural Members
1.4.9 Roofing and Siding
1.4.10 Provisions for Gutters And Downspouts
1.4.11 Drift Provisions
1.4.12 Grounding and Lightning Protection
1.5 DESIGN ANALYSIS
1.6 DELIVERY AND STORAGE
1.7 WARRANTIES
1.7.1 Prime Contractor's Weathertightness Warranty
1.8 COORDINATION MEETING

PART 2 PRODUCTS

2.1 MANUFACTURERS
2.2 MATERIALS
2.3 STRUCTURAL STEEL FRAMING
2.4 DECK PANELS
2.5 FASCIA SYSTEMS
2.6 GUTTER
2.7 DOWNSPOUTS
2.8 HARDWARE
2.9 SEALANTS

PART 3 EXECUTION

3.1 SITE PREPARATION
3.2 INSTALLATION

-- End of Section Table of Contents --

# SECTION 10530

# PRE-ENGINEERED CANOPY SYSTEMS (BID OPTION)

## PART 1 GENERAL

### 1.1 REFERENCES

The publications listed below form a part of this specification to the extent referenced. The publications are referred to in the text by basic designation only.

ALUMINUM ASSOCIATION (AA)

| | |
|---|---|
| AA ADM | (2000) Aluminum Design Manual |

AMERICAN INSTITUTE OF STEEL CONSTRUCTION (AISC)

| | |
|---|---|
| AISC 325 | (2001) LRFD Manual of Steel Construction |
| AISC 335 | (1989) Specification for Structural Steel Buildings - Allowable Stress Design, Plastic Design |
| AISC FCD | (1995a) Quality Certification Program |
| AISC 350 | (1999) Load and Resistance Factor Design (LRFD)Specification for Structural Steel Buildings |

AMERICAN IRON AND STEEL INSTITUTE (AISI)

| | |
|---|---|
| AISI SG-973 | (1996) Cold-Formed Steel Design Manual |

AMERICAN SOCIETY OF CIVIL ENGINEERS (ASCE)

| | |
|---|---|
| ASCE 7 | (1998) Minimum Design Loads for Buildings and Other Structures |

ASTM INTERNATIONAL (ASTM)

| | |
|---|---|
| ASTM A 6/A 6M | (2002b) General Requirements for Rolled Structural Steel Bars, Plates, Shapes, and Sheet Piling |

AMERICAN WELDING SOCIETY (AWS)

| | |
|---|---|
| AWS D1.1/D1.1M | (2002) Structural Welding Code - Steel |

METAL BUILDING MANUFACTURERS ASSOCIATION (MBMA)

| | |
|---|---|
| MBMA Low Rise Manual | (1996) Low Rise Metal Building Systems Manual |

U.S. FEDERAL EMERGENCY MANAGEMENT AGENCY (FEMA)

FEMA 302 (Feb 1998) NEHRP Recommended Provisions for Seismic Regulations for New Buildings and Other Structures

1.2 SUBMITTALS

Government approval is required for submittals with a "G" designation; submittals not having a "G" designation are for information only. When used, a designation following the "G" designation identifies the office that will review the submittal for the Government. The following shall be submitted in accordance with Section 01330 SUBMITTAL PROCEDURES:

SD-02 Shop Drawings

Design Requirements Drawings; G-AE

Detail drawings consisting of catalog cuts, design and erection drawings, and an isometric view of the roof showing the design wind uplift pressure and dimensions of edge and corner zones. Shop painting and finishing specifications. Anchor bolt placement plan and column reactions.

SD-03 Product Data

Design Analysis; G-AE

Design analysis (canopy and foundations including anchor bolt plans) as one package with the drawings. Include foundation analysis only if foundation redesign is required.

Installation Instruction Manuals; G-ED

Manufacturer's literature for individual canopy component systems.

Installation; G-AE

Manufacturer's canopy erection instruction and erection drawings describing the preparation requirements, assembly sequence, temporary bracing, shoring, and related information necessary for erection of the metal canopy including its structural framework and components.

Qualifications;

Qualifications of the manufacturer, the manufacturer's Representative when one is used, and qualifications and experience of the canopy erector. A brief list of locations where canopies of similar design have been used shall be included with the detail drawings and shall also include information regarding date of completion, name and address of owner, and how the structure is used.

SD-04 Samples

Accessories; G-AE

One sample of each type of flashing, trim, closure, cap, fascia and similar items. Size shall be sufficient to show construction and configuration.

SD-07 Certificates

Metal Canopy Systems;

a. A Certificate from the metal canopy manufacturer stating that the metal canopy was designed from a complete set of the contract drawings and specifications and that the canopy furnished complies with the specified requirements.

b. Mill certification for structural bolts, framing steel, roofing and siding, and steel wall liner panels.

c. Warranty certificate. At the completion of the project the Contractor shall furnish signed copies of the 1-year Warranty for Metal Canopy System. Warranties shall cover leaks and material defects as part of a Material Warranty, and Watertightness Warranty.

## 1.3 GENERAL REQUIREMENTS

The metal canopy covered under this specification shall be provided by a single manufacturer and shall include all components and assemblies that form a canopy.

### 1.3.1 Qualifications

#### 1.3.1.1 Manufacturer

Metal canopy shall be the product of a recognized steel canopy manufacturer who has been in the practice of manufacturing steel canopies for a period of not less than 5 years. The manufacturer shall be chiefly engaged in the practice of designing and fabricating steel canopy systems.

#### 1.3.1.2 Installer

Erector shall have specialized experience in the erection of steel canopy systems for a period of at least 3 years.

## 1.4 DESIGN REQUIREMENTS

Criteria and definitions shall be in accordance with MBMA Low Rise Manual, except criteria for seismic loads which shall be in accordance with FEMA 302 and all other loads and load combinations in accordance with ASCE 7.

### 1.4.1 Dead Loads

The dead load shall consist of the weight of all permanent construction such as roof, framing, covering members and all other materials of the canopy system.

### 1.4.2 Collateral Loads

Collateral load of 4 pounds per square foot shall be applied to the entire

structure to account for the weight of additional permanent materials other than the canopy system, such as sprinklers, mechanical systems, electrical systems, hung partitions, and ceilings. This allowance does not include the weight of hung equipment weighing 50 pounds or more. Equipment loads of 50 pounds or more shall be shown on the shop (detail) drawings and the structure (frame, purlins, girts) shall be strengthened as required. The Contractor is responsible for providing the canopy manufacturer the magnitude and approximate location of all concentrated loads greater than 50 pounds before design of the canopy commences.

1.4.3 Roof Live Loads

1.4.3.1 Uniform Loads

Uniform roof live loads, including maintenance traffic and construction loads of 20 pounds per square foot shall be determined and applied in accordance with ASCE 7.

1.4.3.2 Concentrated Loads

In addition to ASCE 7 roof live loads, a minimum design concentrated load of 300 pounds shall be used to simulate a construction load on roof panels. The concentrated load shall be applied at the panel midspan and shall be resisted by a single standing seam metal roof panel, or a 24 inches wide corrugated metal panel, assumed to be acting as a beam. The undeformed shape of the panel shall be used to determine the section properties.

1.4.4 Roof Snow Loads

The design roof snow loads, including effects of drifting, shall be determined and applied in accordance with ASCE 7 using a ground snow load of 10 psf, a thermal factor of 1.1, and an importance factor of 1.2.

1.4.5 Wind Loads

Wind pressures shall be computed and applied in accordance with ASCE 7 using a basic wind speed of 110 mph (3 second gust), and importance factor of 1.15, and exposure C. A minimum wind uplift pressure shall be 15 psf primary wind.

1.4.6 Seismic Loads

Seismic loads shall be computed in accordance with FEMA 302 using a short period spectral acceleration (SDS) at 0.15 and a one second spectral acceleration (SD1) of 0.06 and a seismic use group of IIIE. Building importance factor shall be 1.5.

1.4.7 Foundations

The foundation system shall be designed to utilize a pile cap with precast driven pile. The capacity of each pile shall be 10 kips with a bottom of pile elevation located at 18 ft. below bottom of pile cap. See Section 03300 CAST-IN-PLACE STRUCTURAL CONCRETE. The foundation was designed using estimated reactions for available buildings meeting the project requirements, controlling reactions are indicated on the drawings. The anchor bolts and any necessary shear transfer elements shall be designed and provided by the Contractor for the reactions of the supplied canopy. If the reactions of the canopy supplied by the Contractor exceed the indicated design reactions, the Contractor shall design and provide a

foundation adequate to resist the reactions at no additional expense to the Government. Any Contractor-designed foundation shall maintain the basic features of the original design and shall be designed by a Registered Professional Engineer. All design calculations shall be submitted for approval.

1.4.8 Framing and Structural Members

Structural steel members and their connections shall be designed in accordance with AISC 335 or AISC 350. Structural cold-formed steel framing members and their connections shall be designed in accordance with FEMA 302. Aluminum structural members and their connections shall be designed in accordance with AA ADM. Maximum deflection under applied live load, snow, or wind load shall not exceed 1/180th of the span length. The subpurlin and/or purlin spacing shall not exceed 30 inches on centers at the corner, edge and ridge zones, and 5 foot maximum on centers for the remainder of the roof.

1.4.9 Roofing and Siding

Except as otherwise specified, steel roofing and siding shall be designed in accordance with AISI SG-973. Maximum deflection for wall and roof panels under applied live load, snow or wind loads shall not exceed 1/180th of the span length. The design analysis shall establish that the roof, when deflected under loading combinations, shall not result in ponding. Maximum deflections shall be based on sheets continuous across two or more supports with sheets unfastened and fully free to deflect. The calculated deflection from the concentrated load shall not exceed 1/180 of the span length. The methods for resisting lateral loads shall be cross-bracing or rigid frames.

1.4.10 Provisions for Gutters And Downspouts

Gutters and downspouts shall be designed according to the requirements of canopy manufacturer for storms which should be exceeded only once in 5 years and with adequate provisions for thermal expansion and contraction. Supports for gutters and downspouts shall be designed for the anticipated loads. Roof drainage system to withstand rainfall intensity that has been designed for local conditions in inches per hour, with 5 minute duration.

1.4.11 Drift Provisions

Lateral deflections, or drift, at the roof level of a structure in relation to the floor or slab on grade, caused by deflection of horizontal force resisting elements, shall conform to MBMA Low Rise Manual.

1.4.12 Grounding and Lightning Protection

Grounding and lightning protection shall be provided as specified in Section 13100A LIGHTNING PROTECTION SYSTEM.

1.5 DESIGN ANALYSIS

The design analysis shall be the design of a licensed Professional Engineer experienced in design of this work and shall include complete calculations for the canopy, its components, including roofing and siding and the foundations. Foundations shown on the drawings are based on loads derived from a representative set of similar building types. If the loads are exceeded, the Contractor shall obtain the services of a licensed

Professional Engineer and provide a revised design with the design analysis. Formulas and references shall be identified. Assumptions and conclusions shall be explained, and cross-referencing shall be clear. Wind forces on various parts of the structure, both positive and negative pressure, shall be calculated with the controlling pressure summarized. Lateral forces due to seismic loading shall be calculated and tabulated for the various parts and portions of the canopy. Computer programmed designs shall be accompanied by stress values and a letter of certification, signed by a licensed Professional Engineer, stating the design criteria and procedures used and attesting to the adequacy and accuracy of the design. A narrative of the computer program delineating the basic methodology shall be included. Computer program output shall be annotated and supplemented with sketches to verify the input and output. Critical load conditions used in the final sizing of the members shall be emphasized. The design analysis shall include the name and office phone number of the designer, who shall function as a point of contact to answer questions during the detail drawing review.

## 1.6 DELIVERY AND STORAGE

Materials shall be delivered to the site in a dry and undamaged condition and stored out of contact with the ground. Materials other than framing and structural members shall be covered with weathertight coverings and kept dry. Storage accommodations for roofing and siding shall provide good air circulation and protection from surface staining.

## 1.7 WARRANTIES

The Canopy System, composed of framing and structural members, roofing and siding, gutters and downspouts, accessories, fasteners, trim, and miscellaneous canopy closure items (when furnished by the manufacturer) shall be warranted as described below against material and workmanship deficiencies, system deterioration caused by exposure to the elements and service design loads, leaks and wind uplift damage. Any emergency temporary repairs conducted by the owner shall not negate the warranties.

### 1.7.1 Prime Contractor's Weathertightness Warranty

The Canopy System shall be warranted by the Contractor on a no penal sum basis for a period of one year against materials and workmanship deficiencies; system deterioration caused by exposure to the elements and/or inadequate resistance to specified service design loads, water leaks, and wind uplift damage. The Canopy System covered under this warranty shall include but is not limited to the following: framing and structural members, roofing and fascia panels and seams, interior or exterior gutters and downspouts, accessories, fasteners, trim, flashings and miscellaneous canopy closure items (when furnished by the manufacturer), connectors, components, and fasteners, and other system components and assemblies installed to provide a weathertight system; and items specified in other sections of these specifications that become part of the canopy system. All material and workmanship deficiencies, system deterioration caused by exposure to the elements and/or inadequate resistance to specified service design loads, water leaks and wind uplift damage shall be repaired as approved by the Contracting Officer.

## 1.8 COORDINATION MEETING

A coordination meeting shall be held within 45 days after contract award for mutual understanding of the metal canopy system contract requirements.

This meeting shall take place at the building site and shall include representatives from the Contractor, the metal canopy system manufacturer, the metal canopy supplier, the erector, and the Contracting Officer. All items required by paragraph SUBMITTALS shall be discussed, including applicable standard manufacturer shop drawings, and the approval process. The Contractor shall coordinate time and arrangements for the meeting

## PART 2 PRODUCTS

### 2.1 MANUFACTURERS

Steeltec, LLC.

Fashion, Inc.

Approved equal.

### 2.2 MATERIALS

All materials shall be new, of good quality and without defects that would lessen the quality of the product.

All materials shall conform to the specifications and standard practices of the latest editions of the AISC Manual of Steel Construction AISC 325, AISC FCD, and AISC 350, AISI Specifications for the Design of Cold Formed Members AISI SG-973, ASTM A 6/A 6M Standard Specifications for General Requirements for Rolled Steel Plates, Shapes, Sheets and Bars for Structural Use, and AWS D1.1/D1.1M for welded connections.

### 2.3 STRUCTURAL STEEL FRAMING

Columns shall be fabricated from hollow structural sections (HSS) conforming to ASTM A500 Grade B, with a minimum yield strength of 46 ksi. ASTM A36 structural steel plate with a minimum yield strength of 36 ksi with pre-punched or pre-drilled bolt holes shall be used for column top and base plates. Plates shall be sized for required loads, with a minimum thickness of 1/2 inch for top plates and 3/4 inch for base plates. Gussets shall be used as required. Columns shall be provided with electrical access openings, cover plates, conduits and drains per owner requirements.

Wide flange beams conforming to ASTM A572 Grade 50 with a minimum yield strength of 50 ksi shall be used as the primary roof-framing members. Other roof-framing members (channel, angle, or tees), if used, shall conform to ASTM A36 with a minimum yield strength of 36 ksi. Bracing shall be designed as required by design.

Structural steel plate shall conform to ASTM A36 with a minimum yield strength of 36 ksi.

Structural bolts shall conform to ASTM A325 Specification for High Strength Bolts for Structural Steel Joints. All structural steel framing members shall be shop fabricated for field bolted assembly, unless otherwise specified on drawing.

Anchor bolts shall conform to ASTM A36 with a minimum yield strength of 36 ksi. Standard anchor bolt size shall be 1-1/4 inch diameter by 44 inch long with minimum 7 inch, 90-degree bend. Anchor bolts shall be placed with a minimum projection of 8 inches above top of footer. Double nuts and washers shall be provided with each anchor bolt, with one set to be used

for leveling column. Galvanized sheet metal templates for setting anchor bolts shall be provided. Templates shall be removed prior to setting columns on anchor bolts.

All structural steel framing members shall be cleaned to remove loose mill scale and other foreign matter.

After cleaning, all members shall be given one shop coat of red-oxide rust-inhibitive primer. The primer coat thickness shall be a minimum of 1 mil.

## 2.4 DECK PANELS

Roof deck panels shall conform to ASTM A653 Grade 40 steel with a minimum yield strength of 40 ksi, with a G60 galvanized surface per ASTM A924. Aluminum and Galvalume deck pans are also available.

Panel profile shall be 3 x 16 with 20 gauge material thickness.

Panels shall have a finish side coated with a full coat of white polyester paint baked on over an epoxy primer. A white wash coat baked on over an epoxy primer shall protect the interior side of the panel. Other options include bronze color, a flat or high gloss finish, and a smooth or embossed texture.

Panels shall be fastened to the bottom flange of the wide flange purlin beams with a screw-type clamp and lock nut system, which requires no "through the panel" fasteners.

Deck panels shall not be spliced.

## 2.5 FASCIA SYSTEMS

Smooth vertical 18 gauge preformed steel panels shall conform to ASTM A653 Grade CS with a minimum yield strength of 25 ksi, with a G90 galvanized surface per ASTM A924. Panel shall be provided with a powder coat paint finish, in a size and color per Construction Documents.

Fascia outriggers shall be cold formed 2 x 2 x 20 gauge steel angles conforming to ASTM A653 Grade CS with a minimum yield strength of 25 ksi, with a G90 galvanized surface per ASTM A924. 2 x 2 x 18 gauge or 2 x 2 x 1/8 inch structural angle shall be used as required by design. Outrigger spacing per design requirements.

There shall be no exposed fasteners on exterior or bottom face of fascia panels.

Fascia panels shall be protected throughout fabrication and transportation with a factory applied removable film.

Vertical seams shall be sealed from backside with angle closure attached by screws.

24 gauge flashing shall be used as required by design.

## 2.6 GUTTER

TextGutter shall conform to ASTM A653 Grade 40 steel with a minimum yield strength of 40 ksi, with a G60 galvanized surface per ASTM A924.

Profile shall be 14-inch wide x 4-inch deep, 24 gauge thick.

Gutters shall have a finish side coated with a full coat of polyester paint baked on over an epoxy primer. A white wash coat baked on over an epoxy primer shall protect the interior side of the gutter.

Gutter leaders to column drain shall be one of the following options: 3 inch diameter PVC pipe with a 24 gauge leader cover (dry leader). Larger gutters shall be used where required for proper drainage.

## 2.7 DOWNSPOUTS

Internal downspouts shall be 3 inch diameter PVC with couplings provided at gutter leader attachment location and at base of column where attachment to site drainage system is required. Larger drains shall be used where required for proper drainage.

Collector boxes may be provided on columns where downspout is not located on same side of column as the gutter leader comes into. Collector boxes shall be fabricated from 18 gauge G90 galvanized steel conforming to ASTM A653 Grade CS.

## 2.8 HARDWARE

Structural bolts (ASTM A325) required for all field bolted connections shall be provided.

Cadmium plated self-drilling metal screws shall be provided for all sheet metal connections.

Deck panel to beam clips shall be provided to attach all deck pans to structural steel.

1/8-inch diameter pop-rivets shall be provided as required by design.

Anchor bolts and templates shall be shipped to owner prior to pouring of canopy footings in accordance with permit drawings.

## 2.9 SEALANTS

Exposed joints shall be sealed with a high-quality white silicone caulk. Others colors are available for image specific criteria.

Non-exposed joints shall be sealed with white or bronze polyurethane sealant.

Other sealant such as Black Mastic, strip caulk or double-sided tape shall be used as required by design.

# PART 3 EXECUTION

## 3.1 SITE PREPARATION

Owner shall provide a work area that is level and compacted. Gravel, concrete or asphalt base recommended. There shall be no open trenches, tank holes or mounds of fill within 25 feet of the work area.

Owner shall be responsible for removal or relocation of overhead power or

utility lines in work area.

Owner shall provide GFI protected 120 volt AC electrical power within 50 feet of actual work area.

Owner shall ensure that footings were installed by footing contractor in accordance with signed Approval Drawing. Owner shall provide elevations of top of canopy footings, elevation of high grade under canopy and any other relevant elevations (e.g., building elevations, steep grade elevations) to manufacturer prior to canopy fabrication.

Owner shall ensure that footing contractor has adequately protected anchor bolts during the pour so that anchor bolts and threads are not damaged to allow proper column erection and nut tightening. Nuts and washers for anchor bolts shall be left on-site and accessible.

## 3.2 INSTALLATION

Anchor bolts and templates shall be shipped to owner prior to pouring canopy footings in accordance with permit drawings. Anchor bolts may be requested subsequent to canopy order placement.

Canopy delivery schedule shall be coordinated with Contractor. Delivery lead times shall be a minimum of four weeks from order placement and return of signed Approval Drawings to manufacturer. Long lead-time items may require a longer delivery schedule.

Structural steel shall be set plumb, square and level in accordance with Erection Drawings provided with shipment. Erection of structural steel shall be in accordance with the latest AISC Specifications and Code of Standard Practice. All structural bolts shall be tightened by the turn-of-the-nut method as specified in the latest RCSC Specification for Structural Joints Using ASTM A325 or A490 Bolts.

Deck, fascia, and gutter systems, as well as other accessories shall be assembled in accordance with Erection Drawings provided with shipment.

Steeltec, LLC shall not be responsible for wiring and sealing of canopy lights and signage.

-- End of Section --

SECTION TABLE OF CONTENTS

DIVISION 10 - SPECIALTIES

SECTION 10800

TOILET ACCESSORIES

**07/02**

PART 1 GENERAL

1.1 REFERENCES
1.2 SUBMITTALS
1.3 DELIVERY, STORAGE, AND HANDLING
1.4 WARRANTY

PART 2 PRODUCTS

2.1 MANUFACTURED UNITS
2.1.1 Anchors and Fasteners
2.1.2 Finishes
2.2 ACCESSORY ITEMS
2.2.1 Mirrors, Glass (MG)
2.2.2 Paper Towel Dispenser (PTD)
2.2.3 Toilet Tissue Dispenser (TTD)

PART 3 EXECUTION

3.1 INSTALLATION
3.1.1 Surface Mounted Accessories
3.2 CLEANING
3.3 SCHEDULE

-- End of Section Table of Contents --

# SECTION 10800

# TOILET ACCESSORIES
**07/02**

## PART 1 GENERAL

### 1.1 REFERENCES

The publications listed below form a part of this specification to the extent referenced. The publications are referred to in the text by basic designation only.

AMERICAN SOCIETY FOR TESTING AND MATERIALS (ASTM)

ASTM C 1036 (1991; R 1997) Flat Glass

### 1.2 SUBMITTALS

Government approval is required for submittals with a "G" designation; submittals not having a "G" designation are for information only or as otherwise designated. When used, a designation following the "G" designation identifies the office that will review the submittal for the Government. The following shall be submitted in accordance with Section 01330 SUBMITTAL PROCEDURES:

SD-03 Product Data

Finishes; G, AO
Accessory Items; G, AO

Manufacturer's descriptive data and catalog cuts indicating materials of construction, fasteners proposed for use for each type of wall construction, mounting instructions, operation instructions, and cleaning instructions.

SD-04 Samples

Accessory Items; G, AO

One sample of each accessory proposed for use. Approved samples may be incorporated into the finished work, provided they are identified and their locations noted.

### 1.3 DELIVERY, STORAGE, AND HANDLING

Toilet accessories shall be wrapped for shipment and storage, delivered to the jobsite in manufacturer's original packaging, and stored in a clean, dry area protected from construction damage and vandalism.

### 1.4 WARRANTY

Manufacturer's standard performance guarantees or warranties that extend beyond a 1 year period shall be provided.

PART 2 PRODUCTS

2.1 MANUFACTURED UNITS

Toilet accessories shall be provided where indicated in accordance with paragraph SCHEDULE. Each accessory item shall be complete with the necessary mounting plates and shall be of sturdy construction with corrosion resistant surface.

2.1.1 Anchors and Fasteners

Anchors and fasteners shall be capable of developing a restraining force commensurate with the strength of the accessory to be mounted and shall be suited for use with the supporting construction. Exposed fasteners shall be of tamperproof design and shall be finished to match the accessory.

2.1.2 Finishes

Except where noted otherwise, finishes on metal shall be provided as follows:

| Metal | Finish |
|---|---|
| Stainless steel | No. 4 satin finish |
| Carbon steel, copper alloy, and brass | Chromium plated, bright |

2.2 ACCESSORY ITEMS

Accessory items shall conform to the requirements specified below.

2.2.1 Mirrors, Glass (MG)

Glass for mirrors shall be Type I transparent flat type, Class 1-clear. Glazing Quality q1 1/4 inch thick conforming to ASTM C 1036. Glass shall be coated on one surface with silver coating, copper protective coating, and mirror backing paint. Silver coating shall be highly adhesive pure silver coating of a thickness which shall provide reflectivity of 83 percent or more of incident light when viewed through 1/4 inch thick glass, and shall be free of pinholes or other defects. Copper protective coating shall be pure bright reflective copper, homogeneous without sludge, pinholes or other defects, and shall be of proper thickness to prevent "adhesion pull" by mirror backing paint. Mirror backing paint shall consist of two coats of special scratch and abrasion-resistant paint and shall be baked in uniform thickness to provide a protection for silver and copper coatings which will permit normal cutting and edge fabrication.

2.2.2 Paper Towel Dispenser (PTD)

Paper towel dispenser shall conform to CID A-A-2380, Type I, and shall be constructed of not less than 0.269 inch Type 304 stainless steel, and shall be surface mounted. Dispenser shall have a towel compartment and a mirror door and liquid soap dispenser. Locking mechanism shall be tumbler key lock .

2.2.3 Toilet Tissue Dispenser (TTD)

Toilet tissue holder shall be Type II - surface mounted with two rolls of standard tissue mounted horizontally . Cabinet shall be stainless steel, satin finish.

PART 3 EXECUTION

3.1 INSTALLATION

Surfaces of fastening devices exposed after installation shall have the same finish as the attached accessory. Exposed screw heads shall be oval. Install accessories at the location and height indicated. Protect exposed surfaces of accessories with strippable plastic or by other means until the installation is accepted. After acceptance of accessories, remove and dispose of strippable plastic protection. Coordinate accessory manufacturer's mounting details with other trades as their work progresses. After installation, thoroughly clean exposed surfaces and restore damaged work to its original condition or replace with new work.

3.1.1 Surface Mounted Accessories

Mount on concealed backplates, unless specified otherwise. Accessories without backplates shall have concealed fasteners. Unless indicated or specified otherwise, install accessories with sheet metal screws or wood screws in lead-lined braided jute, teflon or neoprene sleeves, or lead expansion shields, or with toggle bolts or other approved fasteners as required by the construction. Install backplates in the same manner, or provide with lugs or anchors set in mortar, as required by the construction. Fasten accessories mounted on gypsum board and plaster walls without solid backing into the metal or wood studs or to solid wood blocking secured between wood studs, or to metal backplates secured to metal studs.

3.2 CLEANING

Material shall be cleaned in accordance with manufacturer's recommendations. Alkaline or abrasive agents shall not be used. Precautions shall be taken to avoid scratching or marring of surfaces.

3.3 SCHEDULE

Accessories Required

| Room or Space | MG | PTD | TTD |
|---|---|---|---|
| 103 | | | |

-- End of Section --

SECTION TABLE OF CONTENTS

DIVISION 13 - SPECIAL CONSTRUCTION

SECTION 13100A

LIGHTNING PROTECTION SYSTEM

**07/01**

PART 1 GENERAL

1.1 REFERENCES
1.2 GENERAL REQUIREMENTS
1.2.1 Verification of Dimensions
1.2.2 System Requirements
1.3 SUBMITTALS
1.3.1 Drawings

PART 2 PRODUCTS

2.1 MATERIALS
2.1.1 General Requirements
2.1.2 Main and Secondary Conductors
2.1.2.1 Copper
2.1.2.2 Aluminum
2.1.3 Air Terminals
2.1.4 Ground Rods
2.1.5 Connectors
2.1.6 Lightning Protection Components

PART 3 EXECUTION

3.1 INTEGRAL SYSTEM
3.1.1 General Requirements
3.1.1.1 Air Terminals
3.1.1.2 Roof Conductors
3.1.1.3 Down Conductors
3.1.1.4 Interconnection of Metallic Parts
3.1.1.5 Ground Connections
3.1.1.6 Grounding Electrodes
3.1.2 Metal Roofs
3.1.3 Metal Roofs With Metal Walls
3.1.4 Steel Frame Building
3.2 INSPECTION

-- End of Section Table of Contents --

SECTION 13100A

LIGHTNING PROTECTION SYSTEM
**07/01**

PART 1 GENERAL

1.1 REFERENCES

The publications listed below form a part of this specification to the extent referenced. The publications are referred to in the text by basic designation only.

AMERICAN NATIONAL STANDARDS INSTITUTE (ANSI)

| | |
|---|---|
| ANSI C135.30 | (1988) Zinc-Coated Ferrous Ground Rods for Overhead or Underground Line Construction |

NATIONAL FIRE PROTECTION ASSOCIATION (NFPA)

| | |
|---|---|
| NFPA 70 | (2002) National Electrical Code |
| NFPA 780 | (1997) Installation of Lightning Protection Systems |

UNDERWRITERS LABORATORIES (UL)

| | |
|---|---|
| UL 96 | (1994; Rev thru Jan 2000) Lightning Protection Components |
| UL 96A | (1994; Rev thr Jul 1998) Installation Requirements for Lightning Protection Systems |
| UL 467 | (1993; Rev thru Apr 1999) Grounding and Bonding Equipment |
| UL Elec Const Dir | (2001) Electrical Construction Equipment Directory |

1.2 GENERAL REQUIREMENTS

1.2.1 Verification of Dimensions

The Contractor shall become familiar with all details of the work, verify all dimensions in the field, and shall advise the Contracting Officer of any discrepancy before performing the work. No departures shall be made without the prior approval of the Contracting Officer.

1.2.2 System Requirements

The system furnished under this specification shall consist of the standard products of a manufacturer regularly engaged in the production of lightning protection systems and shall be the manufacturer's latest UL approved

design. The lightning protection system shall conform to NFPA 70 and NFPA 780, UL 96 and UL 96A, except where requirements in excess thereof are specified herein.

## 1.3 SUBMITTALS

Government approval is required for submittals with a "G" designation; submittals not having a "G" designation are for information only. When used, a designation following the "G" designation identifies the office that will review the submittal for the Government. The following shall be submitted in accordance with Section 01330 SUBMITTAL PROCEDURES:

SD-02 Shop Drawings

Drawings; G-AO

Detail drawings consisting of a complete list of material, including manufacturer's descriptive and technical literature, catalog cuts, drawings, and installation instructions. Detail drawings shall demonstrate that the system has been coordinated and will function as a unit. Drawings shall show proposed layout and mounting and relationship to other parts of the work.

SD-07 Certificates

Materials; G-AO,

Where material or equipment is specified to comply with requirements of UL, proof of such compliance. The label of or listing in UL Elec Const Dir will be acceptable evidence. In lieu of the label or listing, a written certificate from an approved nationally recognized testing organization equipped to perform such services, stating that the items have been tested and conform to the requirements and testing methods of Underwriters Laboratories may be submitted. A letter of findings shall be submitted certifying UL inspection of lightning protection systems provided on the facilities: shown on the plans.

### 1.3.1 Drawings

Detail drawings consisting of a complete list of material, including manufacturer's descriptive and technical literature, catalog cuts, drawings, and installation instructions. Detail drawings shall demonstrate that the system has been coordinated and will function as a unit. Drawings shall show proposed layout and mounting and relationship to other parts of the work.

# PART 2 PRODUCTS

## 2.1 MATERIALS

### 2.1.1 General Requirements

No combination of materials shall be used that form an electrolytic couple of such nature that corrosion is accelerated in the presence of moisture unless moisture is permanently excluded from the junction of such metals. Where unusual conditions exist which would cause corrosion of conductors, conductors with protective coatings or oversize conductors shall be used. Where a mechanical hazard is involved, the conductor size shall be

increased to compensate for the hazard or the conductors shall be protected by covering them with molding or tubing made of wood or nonmagnetic material. When metallic conduit or tubing is used, the conductor shall be electrically connected at the upper and lower ends.

2.1.2 Main and Secondary Conductors

Conductors shall be in accordance with NFPA 780 and UL 96 for Class I, Class II, or Class II modified materials as applicable.

2.1.2.1 Copper

Copper conductors used on nonmetallic stacks shall weigh not less than 375 pounds per thousand feet, and the size of any wire in the cable shall be not less than No. 15 AWG. The thickness of any web or ribbon used on stacks shall be not less than No. 12 AWG. Counterpoise shall be copper conductors not smaller than No. 1/0 AWG.

2.1.2.2 Aluminum

Aluminum shall not contact the earth nor shall it be used in any other manner that will contribute to rapid deterioration of the metal. Appropriate precautions shall be observed at connections with dissimilar metals. Aluminum conductors for bonding and interconnecting metallic bodies to the main cable shall be at least equivalent to strength and cross-sectional area of a No. 4 AWG aluminum wire. When perforated strips are provided, strips that are much wider than solid strips shall be. A strip width that is at least twice that of the diameter of the perforations shall be used. Aluminum strip for connecting exposed water pipes shall be not less than No. 12 AWG in thickness and at least 1-1/2 inches wide.

2.1.3 Air Terminals

Terminals shall be in accordance with UL 96 and NFPA 780. The tip of air terminals on buildings used for manufacturing, processing, handling, or storing explosives, ammunition, or explosive ingredients shall be a minimum of 2 feet above the ridge parapet, ventilator or perimeter. On open or hooded vents emitting explosive dusts or vapors under natural or forced draft, air terminals shall be a minimum of 5 feet above the opening. On open stacks emitting explosive dusts, gases, or vapor under forced draft, air terminals shall extend a minimum of 15 feet above vent opening. Air terminals more than 24 inches in length shall be supported by a suitable brace, with guides not less than one-half the height of the terminal.

2.1.4 Ground Rods

Rods made of copper-clad steel shall conform to UL 467 and galvanized ferrous rods shall conform to ANSI C135.30. Ground rods shall be not less than 3/4 inch in diameter and 10 feet in length. Ground rods of copper-clad steel, stainless steel, galvanized ferrous, and solid copper shall not be mixed on the job.

2.1.5 Connectors

Clamp-type connectors for splicing conductors shall conform to UL 96, class as applicable, and, Class 2, style and size as required for the installation.

2.1.6 Lightning Protection Components

Lightning protection components, such as bonding plates, air terminal supports, chimney bands, clips, and fasteners shall conform to UL 96, classes as applicable.

PART 3 EXECUTION

3.1 INTEGRAL SYSTEM

3.1.1 General Requirements

The lightning protection system shall consist of air terminals, roof conductors, down conductors, ground connections, and grounds, electrically interconnected to form the shortest distance to ground. All conductors on the structures shall be exposed except where conductors are in protective sleeves exposed on the outside walls. Secondary conductors shall interconnect with grounded metallic parts within the building. Interconnections made within side-flash distances shall be at or above the level of the grounded metallic parts.

3.1.1.1 Air Terminals

Air terminal design and support shall be in accordance with NFPA 780. Terminals shall be rigidly connected to, and made electrically continuous with, roof conductors by means of pressure connectors or crimped joints of T-shaped malleable metal and connected to the air terminal by a dowel or threaded fitting. Air terminals at the ends of the structure shall be set not more than 2 feet from the ends of the ridge or edges and corners of roofs. Spacing of air terminals 2 feet in height on ridges, parapets, and around the perimeter of buildings with flat roofs shall not exceed 25 feet.

In specific instances where it is necessary to exceed this spacing, the specified height of air terminals shall be increased not less than 2 inches for each foot of increase over 25 feet. On large, flat or gently sloping roofs, as defined in NFPA 780, air terminals shall be placed at points of the intersection of imaginary lines dividing the surface into rectangles having sides not exceeding 50 feet in length. Air terminals shall be secured against overturning either by attachment to the object to be protected or by means of a substantial tripod or other braces permanently and rigidly attached to the building or structure. Metal projections and metal parts of buildings, smokestacks, and other metal objects that do not contain hazardous materials and that may be struck but not appreciably damaged by lightning, need not be provided with air terminals. However, these metal objects shall be bonded to the lightning conductor through a metal conductor of the same unit weight per length as the main conductor.

Where metal ventilators are installed with air terminals mounted thereon, the air terminal shall not be more than 24 inches away from the farther edge or corner. If the air terminal is farther than this distance, an additional air terminal shall be added in order to meet this requirement. Where metal ventilators are installed with air terminals mounted adjacent, the air terminal shall not be more than 24 inches away from the farther edge or corner. If the air terminal is farther than this distance, an additional air terminal shall be added in order to meet this requirement.

3.1.1.2 Roof Conductors

Roof conductors shall be connected directly to the roof or ridge roll. Sharp bends or turns in conductors shall be avoided. Necessary turns shall have a radius of not less than 8 inches. Conductors shall preserve a

downward or horizontal course and shall be rigidly fastened every 3 feet along the roof and down the building to ground. Metal ventilators shall be rigidly connected to the roof conductor at three places. All connections shall be electrically continuous. Roof conductors shall be coursed along the contours of flat roofs, ridges, parapets, and edges; and where necessary, over flat surfaces, in such a way as to join each air terminal to all the rest. Roof conductors surrounding tank tops, decks, flat surfaces, and flat roofs shall be connected to form a closed loop.

3.1.1.3 Down Conductors

Down conductors shall be electrically continuous from air terminals and roof conductors to grounding electrodes. Down conductors shall be coursed over extreme outer portions of the building, such as corners, with consideration given to the location of ground connections and air terminals. Each building or structure shall have not less than two down conductors located as widely separated as practicable, at diagonally opposite corners. On rectangular structures having gable, hip, or gambrel roofs more than 110 feet long, there shall be at least one additional down conductor for each additional 50 feet of length or fraction thereof. On rectangular structures having French, flat, or sawtooth roofs exceeding 250 feet in perimeter, there shall be at least one additional down conductor for each 100 feet of perimeter or fraction thereof. Additional down conductors shall be installed when necessary to avoid "dead ends" or branch conductors ending at air terminals, except where the air terminal is on a roof below the main protected level and the "dead end" or branch conductor is less than 16 feet in length and maintains a horizontal or downward coursing. Down conductors shall be equally and symmetrically spaced about the perimeter of the structure. Down conductors shall be protected by placing in pvc conduit for a minimum distance of 72 inches above finished grade level. .

3.1.1.4 Interconnection of Metallic Parts

Metal doors, windows, and gutters shall be connected directly to the grounds or down conductors using not smaller than No. 6 copper conductor, or equivalent. Conductors placed where there is probability of unusual wear, mechanical injury, or corrosion shall be of greater electrical capacity than would normally be used, or shall be protected. The ground connection to metal doors and windows shall be by means of mechanical ties under pressure, or equivalent.

3.1.1.5 Ground Connections

Ground connections comprising continuations of down conductors from the structure to the grounding electrode shall securely connect the down conductor and ground in a manner to ensure electrical continuity between the two. All connections shall be of the clamp type. There shall be a ground connection for each down conductor. Metal water pipes and other large underground metallic objects shall be bonded together with all grounding mediums. Ground connections shall be protected from mechanical injury. In making ground connections, advantage shall be taken of all permanently moist places where practicable, although such places shall be avoided if the area is wet with waste water that contains chemical substances, especially those corrosive to metal.

3.1.1.6 Grounding Electrodes

A grounding electrode shall be provided for each down conductor located as

shown. A driven ground shall extend into the earth for a distance of not less than 10 feet. Ground rods shall be set not less than 3 feet, nor more than 8 feet, from the structures foundation. The complete installation shall have a total resistance to ground of not more than 25 ohms if a counterpoise is not used. Ground rods shall be tested individually prior to connection to the system and the system as a whole shall be tested not less than 24 hours after rainfall. When the resistance of the complete installation exceeds the specified value or two ground rods individually exceed 25 ohms, the Contracting Officer shall be notified immediately. A counterpoise, where required, shall be of No. 1/0 copper cable or equivalent material having suitable resistance to corrosion and shall be laid around the perimeter of the structure in a trench not less than 2 feet deep at a distance not less than 3 feet nor more than 8 feet from the nearest point of the structure. All connections between ground connectors and grounds or counterpoise, and between counterpoise and grounds shall be electrically continuous. Where so indicated on the drawings, an alternate method for grounding electrodes in shallow soil shall be provided by digging trenches radially from the building. The lower ends of the down conductors are then buried in the trenches.

3.1.2 Metal Roofs

Wood-Frame, Wall-Bearing Masonry or Tile Structure with Metallic Roof and Nonmetallic Exterior Walls, or Reinforced Concrete Building with Metallic Roof: Metal roofs which are in the form of sections insulated from each other shall be made electrically continuous by bonding. Air terminals shall be connected to, and made electrically continuous with, the metal roof as well as the roof conductors and down conductors. Ridge cables and roof conductors shall be bonded to the roof at the upper and lower edges of the roof and at intervals not to exceed 100 feet. The down conductors shall be bonded to roof conductors and to the lower edge of the metal roof. Where the metal of the roof is in small sections, the air terminals and down conductors shall have connections made to at least four of the sections. All connections shall have electrical continuity and have a surface contact of at least 3 square inches.

3.1.3 Metal Roofs With Metal Walls

Wood-Frame Building With Metal Roof and Metal Exterior Walls: The metal roof and the metal walls shall be bonded and made electrically continuous and considered as one unit. The air terminals shall be connected to and made electrically continuous with the metal roof as well as the roof and down conductors. All connections shall have electrical continuity and have a surface contact of at least 3 square inches.

3.1.4 Steel Frame Building

The steel framework shall be made electrically continuous. Electrical continuity may be provided by bolting, riveting, or welding steel frame, unless a specific method is noted on the drawings. The air terminals shall be connected to the structural steel framework at the ridge. Short runs of conductors shall be used as necessary to join air terminals to the metal framework so that proper placing of air terminals is maintained. Separate down conductors from air terminals to ground connections are not required. Where a grounded metal pipe water system enters the building, the structural steel framework and the water system shall be connected at the point of entrance by a ground connector. Connections to pipes shall be by means of ground clamps with lugs. Connections to structural framework shall be by means of nut and bolt or welding. All connections between

columns and ground connections shall be made at the bottom of the steel columns. Ground connections to grounding electrons or counterpoise shall be run from not less than one-half of all the columns distributed equally around the perimeter of the structure at intervals averaging not more than 60 feet.

## 3.2 INSPECTION

The lightning protection system will be inspected by the Contracting Officer to determine conformance with the requirements of this specification. No part of the system shall be concealed until so authorized by the Contracting Officer.

-- End of Section --

SECTION TABLE OF CONTENTS

DIVISION 13 - SPECIAL CONSTRUCTION

SECTION 13110A

CATHODIC PROTECTION SYSTEM (SACRIFICIAL ANODE)

**11/98**

PART 1 GENERAL

1.1 REFERENCES
1.2 SUBMITTALS
1.3 GENERAL REQUIREMENTS
1.3.1 Services of "Corrosion Expert"
1.3.2 Contractor's Modifications
1.3.3 Isolators
1.3.4 Anode and Bond Wires
1.3.5 Surge Protection
1.3.6 Summary of Services Required
1.3.7 Nonmetallic Pipe System
1.3.7.1 Coatings
1.3.7.2 Tracer Wire
1.3.8 Tests of Components
1.3.9 Drawings
1.3.10 Electrical Potential Measurements
1.3.11 Achievement of Criteria for Protection
1.3.12 Metallic Components of Nonmetallic Pipelines
1.3.13 Metallic Component Coating

PART 2 PRODUCTS

2.1 MAGNESIUM ANODES
2.1.1 Anode Composition
2.1.2 Dimensions and Weights
2.1.3 Packaged Anodes
2.1.4 Connecting Wire
2.1.4.1 Wire Requirements
2.1.4.2 Anode Header Cable
2.2 MISCELLANEOUS MATERIALS
2.2.1 Electrical Wire
2.2.1.1 Wire Splicing
2.2.1.2 Test Wires
2.2.2 Conduit
2.2.3 Test Boxes and Junctions Boxes
2.2.4 Joint, Patch, Seal, and Repair Coating
2.2.5 Backfill Shields
2.2.6 Epoxy Potting Compound
2.2.7 Test Stations
2.2.8 Joint and Continuity Bonds
2.2.9 Electrical Isolation of Structures
2.2.9.1 Electrically Isolating Pipe Joints
2.2.9.2 Electricall Conductive Couplings
2.2.9.3 Insulating Joint Testing
2.2.10 Underground Structure Coating

2.2.10.1 Field Joints
2.2.10.2 Inspection of Pipe Coatings
2.2.11 Electrical Connections
2.2.12 Electrical Tape
2.2.13 Permanent Reference Electrodes
2.2.14 CAsing

PART 3 EXECUTION

3.1 CRITERIA OF PROTECTION
3.1.1 Iron and Steel
3.2 ANODE STORAGE AND INSTALLATION
3.2.1 Anode Storage
3.2.2 Anode Installation
3.2.2.1 Single Anodes
3.2.2.2 Welding Methods
3.2.3 Anode Placement - General
3.2.4 Underground Pipeline
3.2.5 Installation Details
3.2.6 Lead Wire Connections
3.2.6.1 Underground Pipeline (Metallic)
3.2.7 Location of Test Stations
3.2.8 Underground Pipe Joint Bonds
3.3 ELECTRICAL ISOLATION OF STRUCTURES
3.3.1 Isolation Joints and Fittings
3.3.2 Gas Distribution Piping
3.4 TRENCHING AND BACKFILLING
3.5 TESTS AND MEASUREMENTS
3.5.1 Baseline Potentials
3.5.2 Isolation Testing
3.5.2.1 Insulation Checker
3.5.2.2 Cathodic Protection Meter
3.5.3 Anode Output
3.5.4 Reference Electrode Potential Measurements
3.5.5 Location of Measurements
3.5.5.1 Piping or Conduit
3.5.5.2 Tanks
3.5.5.3 Casing Tests
3.5.5.4 Holiday Test
3.5.5.5 Recording Measurements
3.6 TRAINING COURSE
3.7 CLEANUP
3.8 MISCELLANEOUS INSTALLATION AND TESTING
3.8.1 Coatings
3.8.2 Excavation
3.9 SPARE PARTS
3.10 SYSTEM TESTING

-- End of Section Table of Contents --

SECTION 13110A

CATHODIC PROTECTION SYSTEM (SACRIFICIAL ANODE)
**11/98**

PART 1 GENERAL

1.1 REFERENCES

The publications listed below form a part of this specification to the extent referenced. The publications are referred to in the text by basic designation only.

AMERICAN SOCIETY FOR TESTING AND MATERIALS (ASTM)

| | |
|---|---|
| ASTM B 843 | (1993; R 1998) Magnesium Alloy Anodes for Cathodic Protection |

U.S. NATIONAL ARCHIVES AND RECORDS ADMINISTRATION (NARA)

| | |
|---|---|
| 40 CFR 280 | Technical Standards and Corrective Action Requirements for Owners and Operators of Underground Storage Tanks (UST) |
| 49 CFR 192 | Transportation of Natural and other Gas by Pipeline: Minimum Federal Safety Standards |
| 49 CFR 195 | Transportation of Hazardous Liquids by Pipeline |

NACE INTERNATIONAL (NACE)

| | |
|---|---|
| NACE RP0169 | (1996) Control of External Corrosion on Underground or Submerged Metallic Piping Systems |
| NACE RP0188 | (1999) Discontinuity (Holiday) Testing of Protective Coatings |
| NACE RP0190 | (1995) External Protective Coatings for Joints, Fittings, and Valves on Metallic Underground or Submerged Pipelines and Piping Systems |

NATIONAL ELECTRICAL MANUFACTURERS ASSOCIATION (NEMA)

| | |
|---|---|
| NEMA TC 2 | (1998) Electrical Polyvinyl Chloride (PVC) Tubing (EPT) and Conduit (EPC-40 and EPC-80) |
| NEMA WC 5 | (1992; Rev 2, 1996) |

| | |
|---|---|
| | Thermoplastic-Insulated Wire and Cable for the Transmission and Distribution of Electrical Energy |

NATIONAL FIRE PROTECTION ASSOCIATION (NFPA)

| | |
|---|---|
| NFPA 70 | (1999) National Electrical Code |

UNDERWRITERS LABORATORIES (UL)

| | |
|---|---|
| UL 6 | (1997) Rigid Metal Conduit |
| UL 510 | (1994; Rev thru Apr 1998) Polyvinyl Chloride, Polyethylene, and Rubber Insulating Tape |
| UL 514A | (1996; Rev Dec 1999) Metallic Outlet Boxes |

## 1.2 SUBMITTALS

Government approval is required for submittals with a "G" designation; submittals not having a "G" designation are for information only. When used, a designation following the "G" designation identifies the office that will review the submittal for the Government. The following shall be submitted in accordance with Section 01330 SUBMITTAL PROCEDURES:

SD-02 Shop Drawings

Drawings; G-ED

Six copies of detail drawings consisting of a complete list of equipment and material including manufacturer's descriptive and technical literature, catalog cuts, results of system design calculations including soil-resistivity, installation instructions and certified test data stating the maximum recommended anode current output density. Detail drawings shall contain complete wiring and schematic diagrams and any other details required to demonstrate that the system has been coordinated and will function properly as a unit.

Contractor's Modifications; G-ED

Six copies of detail drawings showing proposed changes in location, scope of performance indicating any variations from, additions to, or clarifications of contract drawings. The drawings shall show proposed changes in anode arrangement, anode size and number, anode materials and layout details, conduit size, wire size, mounting details, wiring diagram, method for electrically-isolating each pipe, and any other pertinent information to proper installation and performance of the system.

SD-03 Product Data

Equipment; G-ED

Within 30 days after receipt of notice to proceed, an itemized list of equipment and materials including item number, quantity, and manufacturer of each item. The list shall be accompanied by a description of procedures for each type of testing and

adjustments, including testing of coating for thickness and holidays. Installation of materials and equipment shall not commence until this submittal is approved.

Spare Parts;

Spare parts data for each different item of material and equipment specified, after approval of detail drawings and not later than six (6) months prior to the date of beneficial occupancy. The data shall include a complete list of parts, special tools, and supplies, with current unit prices and source of supply. One (1) spare anode of each type shall be furnished.

SD-06 Test Reports

Tests and Measurements; G-ED

Test reports in booklet form tabulating all field tests and measurements performed, upon completion and testing of the installed system and including close interval potential survey, casing and interference tests, final system test verifying protection, insulated joint and bond tests, and holiday coating test. A certified test report showing that the connecting method has passed a 120-day laboratory test without failure at the place of connection, wherein the anode is subjected to maximum recommended current output while immersed in a three percent sodium chloride solution.

Contractor's Modifications; G-ED

Final report regarding Contractor's modifications. The report shall include pipe-to-soil measurements throughout the affected area, indicating that the modifications improved the overall conditions, and current measurements for anodes. The following special materials and information are required: taping materials and conductors; zinc grounding cell, installation and testing procedures, and equipment; coating material; system design calculations for anode number, life, and parameters to achieve protective potential; backfill shield material and installation details showing waterproofing; bonding and waterproofing details; insulated resistance wire; exothermic weld equipment and material.

SD-07 Certificates

Cathodic Protection System; G-ED

Proof that the materials and equipment furnished under this section conform to the specified requirements contained in the referenced standards or publications. The label or listing by the specified agency will be acceptable evidence of such compliance.

Services of "Corrosion Expert"; G, G-ED

Evidence of qualifications of the "corrosion expert."

a. The "corrosion expert's" name and qualifications shall be certified in writing to the Contracting Officer prior to the start of construction.

b. Certification shall be submitted giving the name of the firm, the number of years of experience, and a list of not less than five (5) of the firm's installations three (3) or more years old that have been tested and found satisfactory.

SD-10 Operation and Maintenance Data

Cathodic Protection System; G-ED

Before final acceptance of the cathodic protection system, six copies of operating manuals outlining the step-by-step procedures required for system startup, operation, adjustment of current flow, and shutdown. The manuals shall include the manufacturer's name, model number, service manual, parts list, and brief description of all equipment and their basic operating features. Six copies of maintenance manual, listing routine maintenance procedures, recommendation for maintenance testing, possible breakdowns and repairs, and troubleshooting guides. The manuals shall include single-line diagrams for the system as installed; instructions in making pipe-to-reference cell and tank-to-reference cell potential measurements and frequency of monitoring; instructions for dielectric connections, interference and sacrificial anode bonds; instructions shall include precautions to ensure safe conditions during repair of pipe or other metallic systems. The instructions shall be neatly bound between permanent covers and titled "Operating and Maintenance Instructions." These instructions shall be submitted for the Contracting Officer's approval. The instructions shall include the following:

a. As-built drawings, to scale of the entire system, showing the locations of the piping, location of all anodes and test stations, locations of all insulating joints, and structure-to-reference cell potential test points measured during the tests required by Paragraph: TESTS AND MEASUREMENTS, of this section.

b. Recommendations for maintenance testing, including instructions in making pipe-to-reference cell potential measurements and frequency of testing.

c. All maintenance and operating instructions and nameplate data shall be in English.

d. Instructions shall include precautions to insure safe conditions during repair of pipe system.

Training Course; G-ED

The proposed Training Course Curriculum (including topics and dates of discussion) indicating that all of the items contained in the operating and maintenance instructions, as well as demonstrations of routine maintenance operations, including testing procedures included in the maintenance instructions, are to be covered.

## 1.3 GENERAL REQUIREMENTS

The Contractor shall furnish and install a complete, operating, sacrificial

anode cathodic protection system in complete compliance with NFPA 70, with all applicable Federal, State, and local regulations and with minimum requirements of this contract. In addition to the minimum requirements of these specifications, construction of gas pipelines and associated cathodic protection systems shall be in compliance with 49 CFR 192and construction of hazardous liquid pipelines, including fuel pipelines, and associated cathodic protection systems shall be in compliance with 49 CFR 195and construction and installation of underground fuel storage tanks and associated cathodic protection system shall be in compliance with 40 CFR 280. The services required include planning, installation, adjusting and testing of a cathodic protection system, using sacrificial anodes for cathodic protection of the Water, Fire Protection, Force Main and Gas lines, their connectors and . The cathodic protection system shall include anodes, cables, connectors, corrosion protection test stations, and any other equipment required for a complete operating system providing the NACE criteria of protection as specified. Insulators are required whenever needed to insulate the pipes from any other structure. Any pipe crossing the fuel pipe shall have a test station. The cathodic protection shall be provided on the product recovery tank.

1.3.1 Services of "Corrosion Expert"

The Contractor shall obtain the services of a "corrosion expert" to supervise, inspect, and test the installation and performance of the cathodic protection system. "Corrosion expert" refers to a person, who by thorough knowledge of the physical sciences and the principles of engineering and mathematics, acquired by professional education and related practical experience, is qualified to engage in the practice of corrosion control of buried or submerged metallic surfaces. Such a person must be accredited or certified by the National Association of Corrosion Engineers (NACE) as a NACE Accredited Corrosion Specialist or a NACE certified Cathodic Protection (CP) Specialist or be a registered professional engineer who has certification or licensing that includes education and experience in corrosion control of buried or submerged metallic piping and tank systems, if such certification or licensing includes 5 years experience in corrosion control on underground metallic surfaces of the type under this contract. The "corrosion expert" shall make at least 3 visits to the project site. The first of these visits shall include obtaining soil resistivity data, acknowledging the type of pipeline coatings to be used and reporting to the Contractor the type of cathodic protection required. Once the submittals are approved and the materials delivered, the "corrosion expert" shall revisit the site to ensure the Contractor understands installation practices and laying out the components. The third visit shall involve testing the installed cathodic protection systems and training applicable personnel on proper maintenance techniques. The "corrosion expert" shall supervise installation and conduct testing of all cathodic protection.

1.3.2 Contractor's Modifications

The specified system is based on a complete system with magnesium sacrificial anodes. The Contractor may modify the cathodic protection system after review of the project, site verification, and analysis, if the proposed modifications include the anodes specified and will provide better overall system performance. The modifications shall be fully described, shall be approved by the Contracting Officer's representative, and shall meet the following criteria. The proposed system shall achieve a minimum pipe-to-soil potential of minus 1000 millivolts with reference to a saturated copper-copper sulfate reference cell on the underground

components of the piping or other metallic surface. The Contractor shall take resistivity measurements of the soil in the vicinity of the pipes and ground bed sites. Based upon the measurements taken, the current and voltage shall be required to produce a minimum of minus 1000 millivolts potential between the structure being tested and the reference cell. This potential shall be obtained over 95 percent of the metallic area. The anode system shall be designed for a life of twenty-five (25) years of continuous operation.

1.3.3 Isolators

Isolators are required to insulate the indicated pipes from any other structure. Isolators shall be provided with lightning protection and a test station as shown.

1.3.4 Anode and Bond Wires

These anodes shall be in addition to anodes for the pipe under concrete slab and casing requirements. For each cathodic system, the metallic components and structures to be protected shall be made electrically continuous. This shall be accomplished by installing bond wires between the various structures. Bonding of existing buried structures may also be required to preclude detrimental stray current effects and safety hazards. Provisions shall be included to return stray current to its source without damaging structures intercepting the stray current. The electrical isolation of underground facilities in accordance with acceptable industry practice shall be included under this section. All tests shall be witnessed by the Contracting Officer.

1.3.5 Surge Protection

Surge protection shall be installed across insulating flanges or fittings installed in underground piping as indicated on drawings. The surge protector shall be UL Listed for use in hazardous areas. Only approved, sealed, waterproof lightning arrestor devices shall be installed.

1.3.6 Summary of Services Required

The scope of services shall include, but shall not be limited to, the following:

a. Close-interval potential surveys.

b. Cathodic Protection Systems.

c. System testing.

d. Casing corrosion control.

e. Interference testing.

f. Training.

g. Operating and maintenance manual.

h. Insulator testing and bonding testing.

i. Coating and holiday testing shall be submitted within 45 days of notice to proceed.

1.3.7 Nonmetallic Pipe System

In the event pipe other than metallic pipe is approved and used in lieu of metallic pipe, all metallic components of this pipe system shall be protected with cathodic protection. Detailed drawings of cathodic protection for each component shall be submitted to the Contracting Officer for approval within 45 days after date of receipt of notice to proceed, and before commencement of any work.

1.3.7.1 Coatings

Coatings for metallic components shall be as required for metallic fittings. Protective covering (coating and taping) shall be completed and tested on each metallic component (such as valves, hydrants and fillings). This covering shall be as required for underground metallic pipe. Each test shall be witnessed by the Contracting Officer. Coatings shall be selected, applied, and inspected in accordance with NACE RP0190 and as specified in these specifications. The use of nonmetallic pipe does not change other requirements of the specifications. Any deviations due to the use of nonmetallic pipe shall be submitted for approval.

1.3.7.2 Tracer Wire

When a nonmetallic pipe line is used to extend or add to an existing metallic line, an insulated No. 8 AWG copper wire shall be thermit-welded to the existing metallic line and run the length of the new nonmetallic line. This wire shall be used as a locator tracer wire and to maintain continuity to any future extensions of the pipe line.

1.3.8 Tests of Components

A minimum of two (2) tests shall be made at each metallic component in the piping system. One (1) measurement shall be made directly over the anodes and the other measurement shall be over the outer edge of the component, but at the farthest point from the anodes. Structure and pipes shall be shown with the cathodic protection equipment. All components of the cathodic protection system shall be shown on drawings, showing their relationship to the protected structure or component. A narrative shall describe how the cathodic protection system will work and deleniate testing required at each component. Components requiring cathodic protection shall include but not be limited to the following:

a. Pipes under the floor slab or foundations.

b. PIV.

c. Shutoff valves.

d. Metallic pipe extended from aboveground locations.

e. Each connector or change-of-direction device.

f. Any metallic pipe component or section.

g. Backflow preventor.

h. Culvert.

1.3.9 Drawings

Detailed drawings shall be provided showing location of anodes, insulated fittings, test stations, permanent reference cells, and bonding. Locations shall be referenced to two (2) permanent facilities or mark points.

1.3.10 Electrical Potential Measurements

All potential tests shall be made at a minimum of 10 foot intervals witnessed by the Contracting Officer. Submittals shall identify test locations on separate drawing, showing all metal to be protected and all cathodic protection equipment. Test points equipment and protected metal shall be easily distinguished and identified.

1.3.11 Achievement of Criteria for Protection

All conductors, unless otherwise shown, shall be routed to or through the test stations. Each system provided shall achieve a minimum pipe-to-soil potential of minus 1000 millivolt potentials with reference to a saturated copper-copper-sulfate reference cell on all underground components of the piping. Testing will be witnessed by the Contracting Officer. Additional anodes shall be provided by the Contractor if required to achieve the minus 1000 millivolts . Although acceptance criteria of the cathodic protection systems are defined in NACE RP0169, for this project the potential of minus 1000 millivolts is the only acceptable criteria.

1.3.12 Metallic Components of Nonmetallic Pipelines

a. Metallic components: As a minimum, each metallic component shall be protected with one (1) magnesium anode. This number of anodes is required to achieve minus 1000 millivolts potential on the metallic area. As a minimum, the magnesium anode unpackaged weight shall be 17 pounds. The magnesium anodes shall be routed through a test station.

b. Fire Hydrants: Fire hydrant pipe components shall have a minimum of two (2) anodes. These magnesium anodes shall have an unpackaged weight of 17 pounds.

c. Pipe Under Concrete Slab: Pipe under concrete slab shall have a minimum of 3 magnesium anodes. These magnesium anodes shall have an unpackaged weight of 17 pounds.

d. Valves: Each valve shall be protected with 1 magnesium anode. The magnesium anode shall have an unpackaged weight of 17 pounds.

e. Connectors or Change-of-Direction Devices: Each change-of-direction device shall be protected with 2 magnesium anodes. The magnesium anode shall have an unpackaged weight of 17 pounds.

1.3.13 Metallic Component Coating

Coatings for metallic components shall be as required for metallic fittings as indicated. This will include fire hydrants, T's, elbows, valves, etc. Coatings shall be selected, applied, and inspected in accordance with NACE RP0190 and as specified in these specifications.

PART 2 PRODUCTS

2.1 MAGNESIUM ANODES

A minimum of four 20 pound anodes shall be installed on the product recover Tank system. See Paragraph METALLIC COMPONENTS AND TYPICALS for additional anodes under slab.

2.1.1 Anode Composition

Anodes shall be of high-potential magnesium alloy, made of primary magnesium obtained from sea water or brine, and not made from scrap metal. Magnesium anodes shall conform to ASTM B 843 and to the following analysis (in percents) otherwise indicated:

| | |
|---|---|
| Aluminum, max. | 0.010 |
| Manganese, max. | 0.50 to 1.30 |
| Zinc | 0.05 |
| Silicon, max. | 0.05 |
| Copper, max. | 0.02 |
| Nickel, max. | 0.001 |
| Iron, Max. | 0.03 |
| Other impurities, max. | 0.05 each or 0.3 max. total |
| Magnesium | Remainder |

The Contractor shall furnish spectrographic analysis on samples from each heat or batch of anodes used on this project.

2.1.2 Dimensions and Weights

Dimensions and weights of anodes shall be approximately as follows:

TYPICAL MAGNESIUM ANODE SIZE

(Cross sections may be round, square, or D shaped)

| NOMINAL WT. LBS. | APPROX. SIZE (IN) | NOMINAL GROSS WT lb PACKAGED IN BACKFILL | NOMINAL PACKAGE DIMENSIONS (IN) |
|---|---|---|---|
| 3 | 3 X 3 X 5 | 8 | 5-1/4 X 5-1/4 X 8 |
| 5 | 3 X 3 X 8 | 13 | 5-1/4 X 5-1/4 X 11-1/4 |
| 9 | 3 X 3 X 14 | 27 | 5-1/4 X 20 |
| 12 | 4 X 4 X 12 | 32 | 7-1/2 X 18 |
| 17 | 4 X 4 X 17 | 45 | 7-1/2 X 24 |
| 20 | 2-1/2 x 2-1/2 x 58-3/4 | 72 | 5-1/2 x 5-12 x 65 |
| 32 | 5 X 5 X 20-1/2 | 68 | 8-1/2 X 28 |
| 50 | 7 X 7 X 16 | 100 | 10 X 24 |

2.1.3 Packaged Anodes

Anodes shall be provided in packaged form with the anode surrounded by specially-prepared quick-wetting backfill and contained in a water permeable cloth or paper sack. Anodes shall be centered by means of spacers in the backfill material. The backfill material shall have the following composition, unless otherwise indicated:

| Material | Approximate Percent by Weight |
|---|---|

| | |
|---|---|
| Gypsum | 75 |
| Bentonite | 20 |
| Sodium Sulphate | 5 |
| Total | 100 |

2.1.4 Connecting Wire

2.1.4.1 Wire Requirements

Wire shall be No. 12 AWG solid copper wire, not less than 10 feet long, unspliced, complying with NFPA 70, Type TW, RHH RHW-2, use insulation. Connecting wires for magnesium anodes shall be factory installed with the place or emergence from the anode in a cavity sealed flush with a dielectric sealing compound.

2.1.4.2 Anode Header Cable

Cable for anode header and distribution shall be No. 10 AWG stranded copper wire with type RHH, RHW-2, use or TW insulation, 600-volt rating, in accordance with NEMA WC 5.

2.2 MISCELLANEOUS MATERIALS

2.2.1 Electrical Wire

Wire shall be No. 12 AWG stranded copper wire with NFPA 70, Type TW or RHW-USE insulation.

2.2.1.1 Wire Splicing

Connecting wire splicing shall be made with copper compression connectors or exothermic welds, following instructions of the manufacturer. Single split-bolt connections shall not be used. Sheaths for encapsulating electrical wire splices to be buried underground shall fit the insulated wires entering the spliced joints and epoxy potting compound shall be as specified below.

2.2.1.2 Test Wires

Test wires shall be AWG No. 12 stranded copper wire with NFPA 70, Type TW or RHH or USE insulation.

2.2.2 Conduit

Rigid galvanized steel conduit and accessories shall conform to UL 6. Non metallic conduit shall conform to NEMA TC 2.

2.2.3 Test Boxes and Junctions Boxes

Boxes shall be outdoor type conforming to UL 514A.

2.2.4 Joint, Patch, Seal, and Repair Coating

Sealing and dielectric compound shall be a black, rubber based compound that is soft, permanently pliable, tacky, moldable, and unbacked. Compound shall be applied as recommended by the manufacturer, but not less than 1/2-inch thick. Coating compound shall be cold-applied coal-tar base mastic or hot-applied coal-tar enamel. Pressure-sensitive vinyl plastic

electrical tape shall conform to UL 510.

2.2.5 Backfill Shields

Shields shall consist of approved pipeline wrapping or fiberglass-reinforced, coal-tar impregnated tape, or plastic weld caps, specifically made for the purpose and installed in accordance with the manufacturer's recommendations.

2.2.6 Epoxy Potting Compound

Compound for encapsulating electrical wire splices to be buried underground shall be a two package system made for the purpose.

2.2.7 Test Stations

Stations shall be of the flush-curb-box type and shall be the standard product of a recognized manufacturer. Test stations shall be complete with an insulated terminal block having the required number of terminals. The test station shall be provided with a lockable metal cover and shall have an embossed legend, "C.P. Test." A minimum of one (1) test station shall be provided each component of the pipe or tank . A minimum of four (4) terminals shall be provided in each test station. A minimum of two (2) leads are required to the metallic pipe from each test station. Other conductors shall be provided for each anode, other foreign pipe, and reference cells as required. (NM-4 or equal) The test stations shall be listed for the particular application for which they are to be utilized.

2.2.8 Joint and Continuity Bonds

Bonds shall be provided across all joints in metallic water lines, across any electrically discontinuous connections and all other pipes and structures with other than welded or threaded joints that are included in this cathodic protection system. Unless otherwise specified in the specifications, bonds between structures and across joints in pipe with other than welded or threaded joints shall be No. 6 AWG stranded copper cable with USE insulation. Bonds between structures shall contain sufficient slack for any anticipated movement between structures. Bonds across pipe joints shall contain a minimum of 4 inches of slack to allow for pipe movement and soil stress. Bonds shall be attached by exothermic welding. Exothermic weld areas shall be insulated with coating compound and approved, and witnessed by the Contracting Officer. Continuity bonds shall be installed as necessary to reduce stray current interference. Two separate bond wires will be required on all piping larger than 18" diameter. Bond wires shall be located at least 6" apart. Bonding test data shall be submitted for approval.

2.2.9 Electrical Isolation of Structures

As a minimum, isolating flanges or unions shall be provided at the following locations:

a. Connection of new metallic piping or components to existing piping.

b. Pressure piping under floor slab to a building.

Isolation shall be provided at metallic connection of all lines to existing system and where connecting to a building. Additionally, isolation shall

be provided between water and/or gasforced main line; and foreign pipes that cross the new lines within 10 feet. Isolation fittings, including isolating flanges and couplings, shall be installed aboveground or in a concrete pit.

2.2.9.1 Electrically Isolating Pipe Joints

Electrically isolating pipe joints shall be of a type that is in regular factory production.

2.2.9.2 Electricall Conductive Couplings

Electrically conductive couplings shall be of a type that has a published maximum electrical resistance rating given in the manufacturer's literature. Cradles and seals shall be of a type that is in regular factory production made for the purpose of electrically insulating the carrier pipe from the casing and preventing the incursion of water into the annular space.

2.2.9.3 Insulating Joint Testing

A Model 601 Insulation Checker, as manufactured by "Gas Electronics", or an approved equal, shall be used for insulating joint (flange) electrical testing.

2.2.10 Underground Structure Coating

This coating specification shall take precedence over any other project specification and drawing notes, whether stated or implied, and shall also apply to the pipeline or tank supplier. No variance in coating quality shall be allowed by the Contractor or Base Construction Representative without the written consent of the designer. All underground metallic pipelines and tanks to be cathodically protected shall be afforded a good quality factory-applied coating. This includes all carbon steel, cast-iron and ductile-iron pipelines or vessels. Coatings shall be selected, applied, and inspected in accordance with NACE RP0190 and as specified. If non-metallic pipelines are installed, all metallic fittings on pipe sections shall be coated in accordance with this specification section.

a. The nominal thickness of the metallic pipe joint or other component coating shall be 16 mils, plus or minus 5 percent.

b. Pipe and joint coating for factory applied or field repair material shall be applied as recommended by the manufacturer and shall be one of the following:

(1) Continuously extruded polyethylene and adhesive coating system.
(2) Polyvinyl chloride pressure-sensitive adhesive tape.
(3) High density polyethylene/bituminous rubber compound tape.
(4) Butyl rubber tape.
(5) Coal tar epoxy.

2.2.10.1 Field Joints

All field joints shall be coated with materials compatible with the pipeline coating compound. The joint coating material shall be applied to an equal thickness as the pipeline coating. Unbonded coatings shall not be used on buried metallic piping or components. Unbonded polymer wraps or

tubes shall not be used. Once the pipeline or vessel is set in the trench, an inspection of the coating shall be conducted. This inspection shall include electrical holiday detection. Any damaged areas of the coating shall be properly repaired. The Contracting Officer shall be asked to witness inspection of the coating and testing using a holiday detector.

2.2.10.2 Inspection of Pipe Coatings

Any damage to the protective covering during transit and handling shall be repaired before installation. After field coating and wrapping has been applied, the entire pipe shall be inspected by an electric holiday detector with impressed current in accordance with NACE RP0188 using a full-ring, spring-type coil electrode. The holiday detector shall be equipped with a bell, buzzer, or other type of audible signal which sounds when a holiday is detected. All holidays in the protective covering shall be repaired immediately upon detection. Occasional checks of holiday detector potential will be made by the Contracting Officer's representative to determine suitability of the detector. All labor, materials, and equipment necessary for conducting the inspection shall be furnished by the Contractor.

a. Protective covering for aboveground piping system: Finish painting shall conform to the applicable paragraph of SECTION: 09900, PAINTING, GENERAL, and as follows:

b. Ferrous surfaces: Shop-primed surfaces shall be touched-up with ferrous metal primer. Surfaces that have not been shop-primed shall be solvent-cleaned. Surfaces that contain loose rust, loose mil scale, and other foreign substances shall be mechanically-cleaned by power wire-brushing and primed with ferrous metal primer. Primed surface shall be finished with two (2) coats of exterior oil paint and vinyl paint. Coating for each entire piping service shall be an approved pipe line wrapping having a minimum coating resistance of 50,000 Ohms per square foot.

2.2.11 Electrical Connections

Electrical connections shall be done as follows:

a. Exothermic welds shall be "Cadweld"," Bundy", "Thermoweld" or an approved equal. Use of this material shall be in strict accordance with the manufacturer's recommendations.

b. Electrical-shielded arc welds shall be approved for use on steel pipe by shop drawing submittal action.

c. Brazing shall be as specified in Paragraph: Lead Wire Connections.

2.2.12 Electrical Tape

Pressure-sensitive vinyl plastic electrical tape shall conform to UL 510.

2.2.13 Permanent Reference Electrodes

Permanent reference electrodes shall be Cu-CuS04 electrodes suitable for direct burial. Electrodes shall be guaranteed by the supplier for 15 years' service in the environment in which they shall be placed. Electrodes shall be installed directly beneath pipe, or metallic component.

2.2.14 CAsing

Where a pipeline is installed in a casing under a roadway or railway, the pipeline shall be electrically insulated from the casing, and the annular space sealed and filled with an approved corrosion inhibiting product against incursion of water.

PART 3 EXECUTION

3.1 CRITERIA OF PROTECTION

Acceptance criteria for determining the adequacy of protection on a buried underground pipe tank or metallic component shall be as specified below.

3.1.1 Iron and Steel

The following method (a) shall be used for testing cathodic protection voltages. If more than one method is required, method (b) shall be used.

a. A negative voltage of at least minus 1000 millivolts as measured between the underground component and a saturated copper-copper sulphate reference electrode connecting the earth (electrolyte) directly over the underground component. Determination of this voltage shall be made with the cathodic protection system in operation. Voltage drops shall be considered for valid interpretation of this voltage measurement. A minimum of minus 1000 millivolts potential between the underground component being tested and the reference cell shall be achieved over 95 percent of the area of the structure. Adequate number of measurements shall be obtained over the entire structure, pipe, tank, or other metallic component to verify and record achievement of minus 1000 millivolts. This potential shall be obtained over 95 percent of the total metallic area.

b. For any metallic component, a minimum of two (2) measurements shall be made using subparagraph (a), above, and achieving the potential of minus 1000 millivolts. One (1) measurement shall be made over the anodes and one (1) measurement shall be made at different locations near the component and farthest away from the anode.

3.2 ANODE STORAGE AND INSTALLATION

3.2.1 Anode Storage

Storage area for magnesium anodes will be designated by the Contracting Officer. If anodes are not stored in a building, tarps or similar protection should be used to protect anodes from inclement weather. Packaged anodes, damaged as a result of improper handling or being exposed to rain, shall be resacked by the Contractor and the required backfill added.

3.2.2 Anode Installation

Unless otherwise authorized, installation shall not proceed without the presence of the Contracting Officer. Anodes of the size specified shall be installed to the depth indicated and at the locations shown. Locations may be changed to clear obstructions with the approval of the Contracting Officer. Anodes shall be installed in sufficient number and of the required type, size, and spacing to obtain a uniform current distribution over the surface of the structure. The anode system shall be designed for

a life of 25 years of continuous operation. Anodes shall be installed as indicated in a dry condition after any plastic or waterproof protective covering has been completely removed from the water permeable, permanent container housing the anode metal. The anode connecting wire shall not be used for lowering the anode into the hole. The annular space around the anode shall be backfilled with fine earth in 6 inch layers and each layer shall be hand tamped. Care must be exercised not to strike the anode or connecting wire with the tamper. Approximately 5 gallons of **water shall be applied to each filled hole after anode backfilling and tamping has been completed** to a point about 6inches above the anode. After the water has been absorbed by the earth, backfilling shall be completed to the ground surface level.

3.2.2.1 Single Anodes

Single anodes, spaced as shown, shall be connected through a test station to the pipeline, allowing adequate slack in the connecting wire to compensate for movement during backfill operation.

3.2.2.2 Welding Methods

Connections to ferrous pipe or metal tanks shall be made by exothermic weld methods manufactured for the type of pipe or tank supplied. Electric arc welded connections and other types of welded connections to ferrous pipe and structures shall be approved before use.

3.2.3 Anode Placement - General

Packaged anodes shall be installed completely dry, and shall be lowered into holes by rope sling or by grasping the cloth gather. The anode lead wire shall not be used in lowering the anodes. The hole shall be backfilled with fine soil in 6inch layers and each layer shall be hand-tamped around the anode. Care must be exercised not to strike the anode or lead wire with the tamper. If immediate testing is to be performed, **water shall be added only after backfilling and tamping has been completed** to a point 6 inches above the anode. Approximately 5 gallons of water may be poured into the hole. After the water has been absorbed by the soil, backfilling and tamping may be completed to the top of the hole. Anodes shall be installed as specified or shown. In the event a rock strata is encountered prior to achieving specified augered-hole depth, anodes may be installed horizontally to a depth at least as deep as the bottom of the pipe, with the approval of the Contracting Officer.

3.2.4 Underground Pipeline

Anodes shall be installed at a minimum of 5 feet and a maximum of 10 feet from the line to be protected.

3.2.5 Installation Details

Details shall conform to the requirements of this specification. Details shown on the drawings are indicative of the general type of material required, and are not intended to restrict selection to material of any particular manufacturer.

3.2.6 Lead Wire Connections

3.2.6.1 Underground Pipeline (Metallic)

To facilitate periodic electrical measurements during the life of the sacrificial anode system and to reduce the output current of the anodes, if required, all anode lead wires shall be connected to a test station and buried a minimum of 24 inches in depth. The cable shall be No. 10-12 AWG, stranded copper, or RHH-USE or TW insulated cable. The cable shall make contact with the structure only through a test station. Stucture lead wires connections shall be accomplished by an exothermic welding process. All welds shall be in accordance with the manufacturer's recommendations. A backfill shield filled with a pipeline mastic sealant or material compatible with the coating shall be placed over the weld connection and shall be of such diameter as to cover the exposed metal adequately.

3.2.7 Location of Test Stations

Test stations shall be of the type and location shown and shall be curb box mounted. Buried insulating joints shall be provided with test wire connections brought to a test station. Unless otherwise shown, other test stations shall be located as follows:

a. At 1,000-foot intervals or less.

b. Where the pipe or conduit crosses any other metal pipe.

c. At both ends of casings under roadways and railways.

d. Where both sides of an insulating joint are not accessible above ground for testing purposes.

3.2.8 Underground Pipe Joint Bonds

Underground pipe having other than welded or threaded coupling joints shall be made electrically continuous by means of a bonding connection installed across the joint.

3.3 ELECTRICAL ISOLATION OF STRUCTURES

3.3.1 Isolation Joints and Fittings

Isolating fittings, including main line isolating flanges and couplings, shall be installed aboveground, or within manholes, wherever possible. Where isolating joints must be covered with soil, they shall be fitted with a paper joint cover specifically manufactured for covering the particular joint, and the space within the cover filled with hot coal-tar enamel. Isolating fittings in lines entering buildings shall be located at least 12 inches above grade of floor level, when possible.

3.3.2 Gas Distribution Piping

Electrical isolation shall be provided at each building riser pipe to the pressure regulator, at all points where a short to another structure or to a foreign structure may occur, and at other locations as indicated on the drawings.

## 3.4 TRENCHING AND BACKFILLING

Trenching and backfilling shall be in accordance with Section 02316A EXCAVATION, TRENCHING, AND BACKFILLING FOR UTILITY SYSTEMS.

## 3.5 TESTS AND MEASUREMENTS

### 3.5.1 Baseline Potentials

Each test and measurement will be witnessed by the Contracting Officer. The Contractor shall notify the Contracting Officer a minimum of five (5) working days prior to each test. After backfill of the pipe or tank, the static potential-to-soil of the pipe or tank shall be measured. The locations of these measurements shall be identical to the locations specified for pipe- ortank-to-reference electrode potential measurements. The initial measurements shall be recorded.

### 3.5.2 Isolation Testing

Before the anode system is connected to the pipe or tank, an isolation test shall be made at each isolating joint or fitting. This test shall demonstrate that no metallic contact, or short circuit exists between the two isolated sections of the pipe or tank. Any isolating fittings installed and found to be defective shall be reported to the Contracting Officer.

#### 3.5.2.1 Insulation Checker

A Model 601 insulation checker, as manufactured by "Gas Electronics" or an approved equal, using the continuity check circuit, shall be used for isolating joint (flange) electrical testing. Testing shall conform to the manufacturer's operating instructions. Test shall be witnessed by the Contracting Officer. An isolating joint that is good will read full scale on the meter. If an isolating joint is shorted, the meter pointer will be deflected or near zero on the meter scale. Location of the fault shall be determined from the instructions, and the joint shall be repaired. If an isolating joint is located inside a vault, the pipe shall be sleeved with insulator when entering and leaving the vault.

#### 3.5.2.2 Cathodic Protection Meter

A Model B3A2 cathodic protection meter, as manufactured by "M.C. Miller", or an approved equal, using the continuity check circuit, shall be used for isolating joint (flange) electrical testing. This test shall be performed in addition to the Model 601 insulation checker. Continuity is checked across the isolation joint after the test lead wire is shorted together and the meter adjusted to scale. A full-scale deflection indicates the system is shorted at some location. The Model 601 verifies that the particular insulation under test is good and the Model B3A2 verifies that the system is isolated. If the system is shorted, further testing shall be performed to isolate the location of the short.

### 3.5.3 Anode Output

As the anodes or groups of anodes are connected to the pipe or tank , current output shall be measured with an approved clamp-on milliammeter, calibrated shunt with a suitable millivoltmeter or multimeter, or a low resistance ammeter. (Of the three methods, the low-resistance ammeter is the least desirable and most inaccurate. The clamp-on milliammeter is the

most accurate.) The valves obtained and the date, time, and location shall be recorded.

3.5.4 Reference Electrode Potential Measurements

Upon completion of the installation and with the entire cathodic protection system in operation, electrode potential measurements shall be made using a copper-copper sulphate reference electrode and a potentiometer-voltmeter, or a direct-current voltmeter having an internal resistance (sensitivity) of not less than 10 megohms per volt and a full scale of 10 volts. The locations of these measurements shall be identical to the locations used for baseline potentials. The values obtained and the date, time, and locations of measurements shall be recorded. No less than eight (8) measurements shall be made over any length of line or component. Additional measurements shall be made at each distribution service riser, with the reference electrode placed directly over the service line.

3.5.5 Location of Measurements

3.5.5.1 Piping or Conduit

For coated piping or conduit, measurements shall be taken from the reference electrode located in contact with the earth, directly over the pipe. Connection to the pipe shall be made at service risers, valves, test leads, or by other means suitable for test purposes. Pipe-to-soil potential measurements shall be made at intervals not exceeding 10 feet. The Contractor may use a continuous pipe-to-soil potential profile in lieu of 5 foot interval pipe-to-soil potential measurements. Additional measurements shall be made at each distribution service riser, with the reference electrode placed directly over the service line adjacent to the riser. Potentials shall be plotted versus distance to an approved scale. Locations where potentials do not meet or exceed the criteria shall be identified and reported to the Contracting Officer's representative.

3.5.5.2 Tanks

For underground tanks, measurements shall be taken with the reference electrode located:

a. Directly over the center of the tank.

b. At a point directly over the tank and midway between each pair of anodes.

At least three measurements shall be made.

3.5.5.3 Casing Tests

Before final acceptance of the installation, the electrical separation of carrier pipe from casings shall be tested and any short circuits corrected.

3.5.5.4 Holiday Test

Any damage to the protective covering during transit and handling shall be repaired before installation. After field-coating and wrapping has been applied, the entire pipe shall be inspected by an electric holiday detector with impressed current in accordance with NACE RP0188 using a full-ring, spring-type coil electrode. The holiday detector shall be equipped with a bell, buzzer, or other type of audible signal which sounds when a holiday

is detected. Holidays in the protective covering shall be repaired upon detection. Occasional checks of holiday detector potential will be made by the Contracting Officer to determine suitability of the detector. Labor, materials, and equipment necessary for conducting the inspection shall be furnished by the Contractor. The coating system shall be inspected for holes, voids, cracks, and other damage during installation.

3.5.5.5 Recording Measurements

All pipe- and tank-to-soil potential measurements, including initial potentials where required, shall be recorded. The Contractor shall locate, correct and report to the Contracting Officer any short circuits to foreign pipes or tanks encountered during checkout of the installed cathodic protection system. Pipe- and Tank-to-soil potential measurements shall be taken on as many pipes and tanks as necessary to determine the extent of protection or to locate short-circuits.

3.6 TRAINING COURSE

The Contractor shall conduct a training course for the operating staff as designated by the Contracting Officer. The training period shall consist of a total of 4 hours of normal working time and shall start after the system is functionally completed but prior to final acceptance tests. The field instructions shall cover all of the items contained in the operating and maintenance instructions, as well as demonstrations of routine maintenance operations, including testing procedures included in the maintenance instructions. At least 14 days prior to date of proposed conduction of the training course, the training course curriculum shall be submitted for approval, along with the proposed training date. Training shall consist of demonstration of test equipment, providing forms for test data and drawings showing test point locations.

3.7 CLEANUP

The Contractor shall be responsible for cleanup of the construction site. All paper bags, wire clippings, etc., shall be disposed of as directed. Paper bags, wire clippings and other waste shall not be put in bell holes or anodes excavation.

3.8 MISCELLANEOUS INSTALLATION AND TESTING

3.8.1 Coatings

All aboveground pipeline shall be coated as indicated or as approved. The coating shall have a minimum thickness of 7 mil. The pipeline coating shall be in accordance with all applicable Federal, State, and local regulations.

3.8.2 Excavation

In the event rock is encountered in providing the required depth for anodes, the Contractor shall determine an alternate approved location and, if the depth is still not provided, an alternate plan shall be submitted to the Contracting Officer. Alternate techniques and depths must be approved prior to implementation.

3.9 SPARE PARTS

After approval of shop drawings, and not later than three (3) months prior

to the date of beneficial occupancy, the Contractor shall furnish spare parts data for each different item of material and equipment specified. The data shall include a complete list of parts, special tools, and supplies, with current unit prices and source of supply. In addition, the Contractor shall supply information for material and equipment replacement for all other components of the complete system, including anodes, cables, splice kits and connectors, corrosion test stations, and any other components not listed above. The Contractor shall furnish a reference cell on a reel with 350 feet of conductor, along with other accessories, and a digital voltmeter that can be used in the maintenance of this cathodic protection system. Use of this equipment shall be demonstrated in actual tests during the training course, which shall include a description of the the equipment and measurement of the pipe-to-soil potential, rainfall, and gas company voltages.

## 3.10 SYSTEM TESTING

The Contractor shall submit a report including potential measurements taken at adequately-close intervals to establish that minus 1000 millivolts potential, is provided.

-- End of Section --

SECTION TABLE OF CONTENTS

DIVISION 13 - SPECIAL CONSTRUCTION

SECTION 13112A

CATHODIC PROTECTION SYSTEM (IMPRESSED CURRENT)

**11/98**

PART 1 GENERAL

1.1 REFERENCES
1.2 SUBMITTALS
1.3 GENERAL REQUIREMENTS
1.3.1 Contractor's Modifications
1.3.2 Isolators
1.3.3 Bond Wires
1.3.4 Surge Protection
1.3.5 Sacrificial Anodes
1.3.6 Nonmetallic Pipe Systems
1.3.6.1 Coatings
1.3.6.2 Tracer Wire
1.3.7 Services of "Corrosion Expert"

PART 2 PRODUCTS

2.1 IMPRESSED CURRENT ANODES
2.1.1 Bare Tubular High Silicon Cast-Iron Anodes
2.1.1.1 Chemical Composition (Nominal)
2.1.1.2 Electrical Resistivity
2.1.1.3 Physical Properties (Nominal)
2.1.2 Anode Connecting Cables
2.1.3 Mixed Metal Oxide Anodes
2.1.3.1 Conductive Material
2.1.3.2 Anode Life Test
2.1.3.3 Canister Contained Mixed Metal Oxide Anodes
2.1.3.4 Anode Connecting Cables
2.1.3.5 Canister Connection Cables
2.1.3.6 Deep Anode Connection Cables
2.2 RECTIFIERS AND ASSOCIATED EQUIPMENT
2.2.1 Rectifier Unit
2.2.1.1 Transformer
2.2.1.2 Rectifiers
2.2.1.3 Meters
2.2.1.4 Circuit Breaker
2.2.1.5 Fuses
2.2.2 Cabinet Construction
2.2.2.1 Wiring Diagram
2.2.2.2 Grounding Provisions
2.2.2.3 Resistance to Ground
2.2.2.4 Cabinet Paint System
2.2.3 Wiring
2.3 COKE BREEZE
2.3.1 Calcined Petroleum Coke Breeze (Dry)
2.3.1.1 Electrical Resistivity

2.3.1.2 General Backfill Specifications
2.4 MISCELLANEOUS MATERIALS
2.4.1 Electrical Wire
2.4.1.1 Anode Connecting Wire
2.4.1.2 Anode Header Cable
2.4.1.3 Test Wires
2.4.1.4 Resistance Wire
2.4.2 Deep Anode Ground Bed Casing
2.4.3 Conduit
2.4.4 Test Boxes and Junction Boxes
2.4.5 Vent Pipes
2.4.6 Polyethylene Insulation
2.4.6.1 High Molecular Weight Polyethylene
2.4.7 Test Stations
2.4.8 Calibrated Shunts
2.4.9 Sealing and Dielectric Compound
2.4.10 Protective Covering
2.4.10.1 Pipeline Metallic Components
2.4.10.2 Field Joints
2.4.10.3 Inspection of Pipe Coatings
2.4.10.4 Above Ground Piping System
2.4.11 Preformed Sheaths
2.4.12 Epoxy Potting Compound
2.4.13 Backfill Shields
2.4.14 Electrical Tape
2.4.15 Cable Marker Tape
2.4.16 Electrically Isolating Pipe Joints
2.4.16.1 Threaded Fittings
2.4.16.2 Electrically Isolating Pipe Joints
2.4.17 Electrically Conductive Couplings
2.4.18 Joint and Continuity Bonds
2.4.18.1 Resistance Bonds
2.4.18.2 Stray Current Measurements
2.4.19 Electrical Isolation of Structures

PART 3 EXECUTION

3.1 CRITERIA OF PROTECTION
3.1.1 Iron and Steel
3.2 GROUND BED INSTALLATION
3.2.1 Deep Anode Ground Beds
3.2.1.1 Casing
3.2.1.2 Casing Insulation
3.2.1.3 Anode Requirements
3.2.1.4 Anode Lead Wire
3.2.1.5 Anode Cables
3.2.1.6 Anode and Cable Installation
3.2.1.7 Backfill
3.2.1.8 Cable Marker Tape
3.2.1.9 Pavement Inserts (Test Stations and Access Ports)
3.3 MISCELLANEOUS INSTALLATION
3.3.1 Rectifier Installation
3.3.2 Wire Connections
3.3.2.1 Wire Splicing
3.3.2.2 Steel Surfaces
3.3.3 Pipe Joints
3.3.3.1 Electrical Continuity
3.3.3.2 Coating
3.3.3.3 Electrical Isolation of Structures

3.3.4 Casing
3.3.5 Test Stations
3.4 TESTS AND MEASUREMENTS
3.4.1 Baseline Potentials
3.4.2 Isolation Testing
3.4.2.1 Insulation Checker
3.4.2.2 Cathodic Protection Meter
3.4.3 Anode Output
3.4.4 Electrode Potential Measurements
3.4.5 Location of Measurements
3.4.5.1 Coated Piping or Conduit
3.4.5.2 Underground Tanks
3.4.6 Casing Tests
3.4.7 Interference Testing
3.4.8 Holiday Test
3.4.9 Recording Measurements
3.5 TRAINING COURSE

-- End of Section Table of Contents --

SECTION 13112A

CATHODIC PROTECTION SYSTEM (IMPRESSED CURRENT)
**11/98**

PART 1 GENERAL

1.1 REFERENCES

The publications listed below form a part of this specification to the extent referenced. The publications are referred to in the text by basic designation only.

AMERICAN SOCIETY FOR TESTING AND MATERIALS (ASTM)

| | |
|---|---|
| ASTM D 1248 | (1998) Polyethylene Plastics Molding and Extrusion Materials |

U.S. NATIONAL ARCHIVES AND RECORDS ADMINISTRATION (NARA)

| | |
|---|---|
| 40 CFR 280 | Technical Standards and Corrective Action Requirements for Owners and Operators of Underground Storage Tanks (UST) |
| 49 CFR 192 | Transportation of Natural and other Gas by Pipeline: Minimum Federal Safety Standards |
| 49 CFR 195 | Transportation of Hazardous Liquids by Pipeline |

INSTITUTE OF ELECTRICAL AND ELECTRONICS ENGINEERS (IEEE)

| | |
|---|---|
| IEEE Std 81 | (1983) Guide for Measuring Earth Resistivity, Ground Impedance, and Earth Surface Potentials of a Ground System (Part 1) |

NACE INTERNATIONAL (NACE)

| | |
|---|---|
| NACE RP0169 | (1996) Control of External Corrosion on Underground or Submerged Metallic Piping Systems |
| NACE RP0188 | (1999) Discontinuity (Holiday) Testing of Protective Coatings |
| NACE RP0193 | (2001) External Cathodic Protection of On-Grade Metallic Storage Tank Bottoms |
| NACE RP0285 | (2002) Corrosion Control of Underground Storage Tank Systems by Cathodic Protection |
| NACE RP0572 | (2001) Design, Installation, Operation, and Maintenance of Impressed Current Deep Groundbeds |

NATIONAL ELECTRICAL MANUFACTURERS ASSOCIATION (NEMA)

| | |
|---|---|
| NEMA TC 2 | (1998) Electrical Polyvinyl Chloride (PVC) Tubing (EPT) and Conduit (EPC-40 and EPC-80) |
| NEMA WC 5 | (1992; Rev 2 1996) Thermoplastic-Insulated Wire and Cable for the Transmission and Distribution of Electrical Energy |

NATIONAL FIRE PROTECTION ASSOCIATION (NFPA)

| | |
|---|---|
| NFPA 70 | (1999) National Electrical Code |

UNDERWRITERS LABORATORIES (UL)

| | |
|---|---|
| UL 467 | (1993; Rev thru Apr 1999) Grounding and Bonding Equipment |
| UL 506 | (1994; R Oct 1997) Specialty Transformers |
| UL 510 | (1994;Rev thru Apr 1998) Polyvinyl Chloride, Polyethylene, and Rubber Insulating Tape |
| UL 514A | (1996; Rev Dec 1999) Metallic Outlet Boxes |

## 1.2 SUBMITTALS

Government approval is required for submittals with a "G" designation; submittals not having a "G" designation are for information only. When used, a designation following the "G" designation identifies the office that will review the submittal for the Government. The following shall be submitted in accordance with Section 01330 SUBMITTAL PROCEDURES:

SD-02 Shop Drawings

Drawings; G-AE

Six copies of detail drawings consisting of a complete list of equipment and material including manufacturer's descriptive and technical literature, catalog cuts, results of system design calculations including soil resistivity, installation instructions and certified test data stating the maximum recommended anode current output density and the rate of gaseous production, if any, at that current density. Detail drawings shall contain complete wiring and schematic diagrams and any other details required to demonstrate that the system has been coordinated and will function properly as a unit.

Contractor's Modifications; G-AE

Six copies of detail drawings showing proposed changes in location, scope or performance indicating any variations from, additions to, or clarifications of contract drawings. The drawings shall show proposed changes in anode arrangement, anode size and number, anode materials and layout details, conduit size, wire size, mounting details, wiring diagram, method for

electrically isolating each pipe, and any other pertinent information to the proper installation and performance of the system.

SD-03 Product Data

Miscellaneous Materials; G-AE
Equipment;

Within 45 days after receipt of notice to proceed, an itemized list of equipment and materials including item number, quantity, and manufacturer of each item. The list shall be accompanied by a description of procedures for each type of testing and adjustment, including testing of coating for thickness and holidays. Installation of materials and equipment shall not commence until this submittal is approved.

SD-06 Test Reports

Tests and Measurements; G-AE

Test reports in booklet form tabulating field tests and measurements performed, upon completion and testing of the installed system and including potential survey, casing and interference tests, final system test verifying protection, insulated joint and bond tests, and holiday coating test. Each test report shall indicate the final position of controls. A certified test report showing that the connecting method has passed a 120-day laboratory test without failure at the place of connection, wherein the anode is subjected to maximum recommended current output while immersed in a 3 percent sodium chloride solution.

Contractor's Modifications; G-AE

Final report: The following special materials and information are required: Calculations on current and voltage for 100 V rectifier plus rectifier and meter specifications; taping materials and conductors; zinc grounding cell, installation and testing procedures, and equipment; coating material; system design calculations for rectifier, anode number, life, and parameters to achieve protective potential; backfill shield material and installation details showing waterproofing; bonding and waterproofing details; insulated resistance wire; exothermic weld equipment and material.

SD-07 Certificates

Cathodic Protection System; G-AE

Proof that the materials and equipment furnished under this section conform to the specified requirements contained in the referenced standards or publications. The label or listing by the specified agency will be acceptable evidence of such compliance.

Services of "Corrosion Expert"; G-AE

Evidence of qualifications of the "corrosion expert".

(a) The "corrosion expert's" name and qualifications shall be certified in writing to the Contracting Officer prior to the start of construction.

(b) Certification shall be submitted giving the name of the firm, the number of years of experience, and a list of not less than five (5) of the firm's installations three (3) or more years old that have been tested and found satisfactory.

SD-10 Operation and Maintenance Data

Cathodic Protection System; G-AE

Six copies of operating manual outlining the step-by-step procedures required for system startup, operation, adjustment of current flow, and shutdown. The manuals shall include the manufacturer's name, model number, service manual, parts list, and brief description of all equipment and their basic operating features. Six copies of maintenance manual listing routine maintenance procedures, recommendation for maintenance testing, possible breakdowns and repairs, and troubleshooting guides. The manuals shall include single line diagrams for the system as installed; instructions in making pipe- and tank- to-reference cell potential measurements and frequency of monitoring; instructions for dielectric connections, interference and sacrificial anode bonds; instructions shall include precautions to ensure safe conditions during repair of pipe system.

Training Course;

The proposed Training Course Curriculum (including topics and dates of discussion) indicating that all of the items contained in the operating and maintenance instructions, as well as demonstrations of routine maintenance operations, including testing procedures included in the maintenance instructions, are to be covered.

## 1.3 GENERAL REQUIREMENTS

A complete, operating impressed current cathodic protection system in accordance with NFPA 70, the applicable federal, state and local regulations, and the requirements of this contract shall be provided. In addition to the minimum requirements of these specifications, construction of gas pipelines and associated cathodic protection systems shall be in compliance with 49 CFR 192 and construction of hazardous liquid pipelines, and associated cathodic protection system shall be in compliance with 49 CFR 195 and construction and installation of underground fuel storage tanks and associated cathodic protection system shall be in compliance with 40 CFR 280. The system shall include planning, inspecting the installation, adjusting and testing cathodic protection and test system using rectifiers and impressed current anodes, supplemented with sacrificial anodes as needed, for utilities and equipment shown. The cathodic protection system shall also include cables, connectors, splices, corrosion protection test stations, ac power panels, and any other equipment required for a complete operating system providing the specified protection. The cathodic protection system shall include (a) calculations for rectifier, anodes, and any recommendations for supplementing or changing the minimum design

criteria to provide the specified potentials and (b) equipment, wiring, and wiring devices necessary to produce a continuous flow of direct current from anodes in the soil electrolyte to the pipe and tank surfaces. The installation shall meet the specified protection criteria for a 25 year life.

1.3.1 Contractor's Modifications

The specified system is based on an impressed current system supplemented with magnesium anodes. The Contractor may modify the cathodic protection system after review of the project, site verification and analysis if the proposed modifications include the impressed current anodes and rectifiers and will provide better overall system performance. The modifications shall be fully described, shall be approved by the Contracting Officer and shall meet the following criteria. The proposed system shall achieve a minimum pipe-to-soil "Instant Off" potential of minus 1000 millivolts with reference to a saturated copper-copper sulfate reference cell on the underground metallic components of the piping and tanks. The rectifier shall be adjusted as required to produce a minimum of minus 1000 millivolts "Instant Off" potential between the structure being tested and the reference cell. This potential shall be obtained over 95 percent of the metallic area .

1.3.2 Isolators

Isolators are required to isolate the indicated pipes from any other structure. Isolators shall be provided with lightning protection and a test station as shown.

1.3.3 Bond Wires

For each cathodic protection system, the metallic components and structures to be protected shall be made electrically continuous. This shall be accomplished by installing bond wires between the various structures. Bonding of existing buried structures may also be required to preclude detrimental stray current effects and safety hazards. Provisions shall be included to return stray current to its source without damaging structures intercepting the stray current. The electrical isolation of underground facilities in accordance with acceptable industry practice shall be included under this section.

1.3.4 Surge Protection

Surge protection for hydrant fuel piping shall be as specified under the section for the hydrant fuel piping. In addition, the surge protector shall be UL Listed for use in hazardous areas. Approved sealed, waterproof, lightning arrestor devices shall be installed across insulated flanges or fittings installed in piping as indicated on the drawings. No lightning arrestor devices shall be installed in hydrant fuel pits.

1.3.5 Sacrificial Anodes

Sacrificial high potential magnesium anodes shall be located as required to provide localized cathodic protection or supplemental cathodic protection for the impressed current system. Each sacrificial magnesium anode shall be routed through a test station. The magnesium anode shall not be connected to the pipe.

1.3.6 Nonmetallic Pipe Systems

When nonmetallic pipe is approved, direct buried or submerged metallic components of the pipe system shall have cathodic protection. Metallic components are connectors, tees, fire hydrants, valves, short pipes, elbows, tie rods, or other metallic equipment. As a minimum, each metallic component shall be protected with a 17 lb magnesium anode connected through a test station. The use of nonmetallic pipe does not change other requirements of the specifications such as submittals, testing, or design calculations for each metallic component. Deviations due to the use of nonmetallic pipe shall be approved by the Contracting Officer.

1.3.6.1 Coatings

Coatings for metallic components shall be as required for metallic fittings. Protective covering (coating and taping) shall be completed and tested on each metallic component and shall be as required for underground metallic pipe.

1.3.6.2 Tracer Wire

When a nonmetallic pipe line is used to extend or add to an existing metallic line, an insulated No. 8 AWG copper wire shall be connected to a terminal in a test station located at each point of transition from metallic pipe to nonmetallic pipe. At each of these test stations, the tracer wire terminal shall be strapped or bonded to the terminal for the negative connection wire to the existing metallic line. The tracer wire shall be run the length of the new nonmetallic line. This wire shall be used as a locator tracer wire and to maintain continuity to any future extension of the pipe line.

1.3.7 Services of "Corrosion Expert"

The Contractor shall obtain the services of a "corrosion expert" to supervise, inspect, and test the installation and performance of the cathodic protection system. "Corrosion expert" refers to a person, who, by reason of thorough knowledge of the physical sciences and the principles of engineering and mathematics, acquired by professional education and related practical experience, is qualified to engage in the practice of corrosion control of buried metallic piping and tank systems. Such a person must be accredited or certified by the National Association of Corrosion Engineers (NACE) as a NACE Accredited Corrosion Specialist or a NACE certified Cathodic Protection (CP) Specialist or be a registered professional engineer who has certification or licensing that includes education and experience in corrosion control of buried or submerged metallic piping and tank systems, if such certification or licensing includes 5 years experience in corrosion control on underground metallic surfaces of the type under this contract. The "corrosion expert" shall make at least 3 visits to the project site. The first of these visits shall include reporting to the Contractor the type of cathodic protection required. Once the submittals are approved and the materials delivered, the "corrosion expert" shall revisit the site to ensure the Contractor understands installation practices and laying out the components. The third visit shall involve testing the installed cathodic protection systems and training applicable personnel on proper maintenance techniques. The "corrosion expert" shall supervise installation and conduct testing of all cathodic protection.

PART 2 PRODUCTS

2.1 IMPRESSED CURRENT ANODES

2.1.1 Bare Tubular High Silicon Cast-Iron Anodes

Cast-iron anodes shall be of the size indicated and shall conform to the following requirements:

2.1.1.1 Chemical Composition (Nominal)

| Element | Percent by Weight Grade 2 |
|---|---|
| Silicon | 14.20-14.75 |
| Manganese | 1.50 Max. |
| Carbon | 0.75-1.15 |
| Chromium | 3.25-5.00 |
| Iron | Balance |

2.1.1.2 Electrical Resistivity

Seventy-two microhm-centimeter at 20 degrees F.

2.1.1.3 Physical Properties (Nominal)

| | |
|---|---|
| Tensile strength | 15,000 psi |
| Compressive strength | 100,000 psi |
| Brinell hardness | 520 |
| Density | 7.0 grams per cubic centimeter |
| Melting point | 2300 degrees F |
| Coefficient of expansion from 32 to 212 degrees F | 0.00000733 centimeter per degree F |

2.1.2 Anode Connecting Cables

Anodes shall have connecting cables installed at the factory. For deep ground beds, each anode located in the borehole shall be accompanied by a reel of continuous cable having the length indicated. No spliced connections will be permitted in deep well cables.

2.1.3 Mixed Metal Oxide Anodes

Mixed metal oxide anodes shall be of the size indicated and shall conform to the following requirements.

2.1.3.1 Conductive Material

The electrically conductive coating shall contain a mixture consisting primarily of iridium, tantalum, and titanium oxides. The average composition is generally a 50/50 atomic percent mixture of iridium and titanium oxides, with a small amount of tantalum. The resistivity, as tested by the manufacturer, shall be no more than 0.002 ohm-centimeter, and the bond strength shall be greater than 7.25 ksi to guarantee the current capacity life and the quality of the conductive ceramic coating. The adhesion or bond strength shall be determined by epoxy bonding a 0.1 inch diameter stud to the ceramic coating and measuring the load to failure (about 10.15 ksi) of either the epoxy or the interface between the coating

and the substrate. The anode must be inert and the electrically conductive ceramic coating dimensionally stable. The ceramic coated anode shall be capable of sustaining a current density of 100 ampere per 10.764 square feet in an oxygen generating electrolyte at 150 degrees F for 20 years, to ensure the current capacity life. An accelerated current capacity life test shall be performed by the manufacturer on every lot of anode wire used to construct the anode as described. The mixed metal oxide coating shall be applied to the wire anode by a firm that is regularly engaged in and has a minimum 5 years experience in manufacturing and applying mixed metal oxide coatings to titanium anode substrates. The mixed metal oxide must be sintered to the titanium surface as to remain tightly bound to the surface when bent 180 degrees onto itself.

2.1.3.2 Anode Life Test

The anode wire material shall sustain current densities of 100 ampere per 10.764 square feet in an oxygen generating electrolyte for 20 years. The manufacturer shall certify that a representative sample taken from the same lot used to construct the anode, has been tested and meets the following criteria. The test cell sustains a current density of 10,000 ampere per 10.764 square feet in a 15 weight percent sulfuric acid electrolyte at 150 degrees F without an increase in anode to cathode potential of more than 1 volt. The cell containing the anode shall be powered with a constant current power supply for the 30 day test period. The representative sample shall be 5 inch in length taken from the lot of wire that is to be used for the anode.

2.1.3.3 Canister Contained Mixed Metal Oxide Anodes

Canister contained mixed metal oxide anodes shall be packed at the factory in light weight, light gauge steel uni-body TIG welded canisters with calcinated petroleum coke breeze. The canisters shall be capped with TIG welded steel and caps providing a totally encapsulated construction. The connecting cable shall pass through a hole in an end cap designed to be tight fitting with a heavy duty strain relief allowing for handling of the canister by the cable. The anode shall be centered in the canister by centralizers to maintain rod position.

2.1.3.4 Anode Connecting Cables

Anodes shall have connecting cables installed at the factory. The connection between the anode rod or ribbon and the lead wire shall be made with a solid crimp couple with solder. The connection shall be sealed in cast epoxy.

2.1.3.5 Canister Connection Cables

Canister connecting cables shall consist of an ultra low resistance solder connection which is a minimum of three times stronger than the cable. For ceramic coated canister anodes, the cable connection shall consist of two molded dielectric layers (pressure seals), a flexible backfill resin encapsulant stabilizer, a schedule 40 PVC pipe Type 1 seal, and Type 1 PVC pipe end plugs. The seals and end plugs shall resist chlorine gas and acid.

2.1.3.6 Deep Anode Connection Cables

For deep anode beds, each anode located in the borehole shall be accompanied by a reel of continuous cable having the length indicated. For deep ceramic coated anode beds, anode connecting cables shall have molded

multiseal solder connections; splices will not be permitted. Chlorine gas resistant cable and shield shall be used for chlorine environments.

## 2.2 RECTIFIERS AND ASSOCIATED EQUIPMENT

### 2.2.1 Rectifier Unit

Rectifier unit shall consist of a transformer, rectifying elements, transformer tap adjuster, terminal block, one dc output voltmeter, one dc output ammeter, fuse holders with fuses for each dc circuit, variable resistors, an ac power-supply circuit breaker, lightning arresters for both input and output, all wired and assembled in a weatherproof cabinet. The transformer shall have a minimum of 4 coursee and 5 fine tap adjustments. The overall efficiency of the rectifier shall be not less than 65 percent when operated at nameplate rating and shall be capable of supplying continuous full rated output at an ambient temperature of 112 degrees F in full sunlight with expected life in excess of 10 years.

#### 2.2.1.1 Transformer

Transformer shall conform to UL 506.

#### 2.2.1.2 Rectifiers

Rectifying elements shall be silicon diodes connected to provide full-wave rectification. Silicon diodes shall be protected by selenium surge cells or varistors against over-voltage surges and by current-limiting devices against over-current surges.

#### 2.2.1.3 Meters

Meters shall be accurate to within plus or minus 2 percent of full scale at 80 degrees F, and shall possess temperature stability above and below 80 degrees F and shall possess temperature stability above and below 80 degrees F of at least 1 percent per 10 degrees F. Separate meters shall be 2-1/2 inch nominal size or larger.

#### 2.2.1.4 Circuit Breaker

A single-pole, flush-mounted, fully magnetic, properly rated non-terminal type circuit breaker shall be installed in the primary circuit of the rectifier supply transformer.

#### 2.2.1.5 Fuses

Cartridge-type fuses with suitable fuse holders shall be provided in each leg of the dc circuit.

### 2.2.2 Cabinet Construction

Cabinet shall be constructed of not lighter than No. 16 gauge hot dipped galvanized steel stainless steel oraluminum , and shall be provided with full front and side doors. The enclosure shall have oil-resistant gasket. The door shall be hinged and have a hasp that will permit the use of a padlock. The cabinet shall be fitted with screened openings of the proper size to provide for adequate cooling. Holes, conduit knockouts, or threaded hubs of sufficient size and number shall be conveniently located.

2.2.2.1 Wiring Diagram

A complete wiring diagram of the power unit showing both the ac supply and the dc connections to anodes shall be on the inside of the cabinet door. All components shall be shown and labeled.

2.2.2.2 Grounding Provisions

Grounding provisions shall be as specified in SECTION 16415A, ELECTRICAL WORK, INTERIOR and comply with NFPA 70 and UL 467 including a ground terminal in the cabinet. The grounding conductor from the terminal to the earth grounding system shall be solid or stranded copper not smaller than No. 6 AWG. The earth grounding system shall consist of one or more ground rods. Ground rods shall be of copper-clad steel conforming to UL 467 3/4 inch in diameter by 10 feet in length. Rods shall be driven full length into the earth. Sectional type rods may be used.

2.2.2.3 Resistance to Ground

The resistance to ground shall be measured using the fall-of-potential method described in IEEE Std 81. The maximum resistance of driven ground shall not exceed 25 ohms under normally dry conditions. If this resistance cannot be obtained with a single rod, one additional rod not less than 6 feet on centers, or if sectional type rods are used, one additional section may be coupled and driven with the first rod. In high-ground-resistance, UL listed chemically charged ground rods may be used. If the resultant resistance exceeds 25 ohms measured not less than 48 hours after rainfall, the Contracting Officer shall be notified immediately. Connections below grade shall be fusion welded. Connections above grade shall be fusion welded or shall use UL 467 approved connectors.

2.2.2.4 Cabinet Paint System

The cabinet and mounting support shall be painted or hot dipped galvanized or aluminum or stainless steel with the manufacturer's standard painting system. The mounting support for the fiberglass cabinet shall be painted or hot dipped galvanized or stainless steel with the manufacturer's standard painting system.

2.2.3 Wiring

Wiring shall be installed in accordance with NFPA 70 utilizing type TW or RHW or polyethylene insulation. Fittings for conduit and cable work shall conform to UL 514A. Outlets shall be of the threaded hub type with gasketed covers. Conduit shall be hub type with gasketed covers. Conduit shall be securely fastened at 8 foot intervals or less. Splices shall be made in outlet fittings only. Conductors shall be color coded for identification. Cable for anode header and distribution shall be No. 2 AWG stranded copper wire with type cathodic protection high molecular weight polyethylene insulation.

2.3 COKE BREEZE

2.3.1 Calcined Petroleum Coke Breeze (Dry)

Breeze shall conform to the following requirements:

2.3.1.1 Electrical Resistivity

Resistivity shall not exceed 1 milliohm-meter (0.1 ohm-cm) Great Lake Carbon C 12 A Test Method.

2.3.1.2 General Backfill Specifications

Bulk Density - 65 to 75 lbs/cubic foot
Fixed Carbon - 99.0% or greater
Volatiles - 0.2% or less
Sizing - .004 inch to 1 mm

2.4 MISCELLANEOUS MATERIALS

2.4.1 Electrical Wire

2.4.1.1 Anode Connecting Wire

Anode connecting wire shall be No. 8 AWG stranded copper wire with type CP high molecular weight polyethylene insulation, 7/64 inch thick, 600 volt rating, in accordance with NEMA WC 5. Cable-to-anode contact resistance shall be 0.003 ohms maximum. Deep anode ground bed connecting wire shall be No. 8 AWG, stranded copper wire with an inner jacket of 40 mils of Halar insulation covered by an outer jacket of 65 mils CP high molecular weight polyethylene insulation, 600 volt rating, in accordance with NEMA WC 5. Cable-to-anode contact resistance shall be 0.02 ohms maximum.

2.4.1.2 Anode Header Cable

Cable for anode header and distribution shall be No. 2 AWG stranded copper wire with type CP high molecular weight polyethylene,7/64 inch thick insulation, 600-volt rating, in accordance with NEMA WC 5.

2.4.1.3 Test Wires

Test wires shall be No. 12 AWG stranded copper wire with NFPA 70 Type TW or RHW insulation.

2.4.1.4 Resistance Wire

Resistance wire shall be AWG No. 16 or No. 22 nickel-chromium wire.

2.4.2 Deep Anode Ground Bed Casing

Casing shall be 10 inch outside diameter, sch 80 pvc The casing shall extend no more than 50 feet below the top of a well cap.

2.4.3 Conduit

Nonmetallic conduit shall conform to NEMA TC 2.

2.4.4 Test Boxes and Junction Boxes

Boxes shall be outdoor type conforming to UL 514A.

2.4.5 Vent Pipes

All deep wells shall be vented in anode zones. Openings in the vent shall not be larger than .006 inches.

2.4.6 Polyethylene Insulation

Polyethylene insulation shall comply with the requirements of ASTM D 1248 and of the following types, classes, and grades:

2.4.6.1 High Molecular Weight Polyethylene

High molecular weight polyethylene shall be Type I, Class C, Grade E5.

2.4.7 Test Stations

Test stations shall be complete with an insulated terminal block having the indicated number of terminals and shall be provided with a lockable cover and have a cast-in legend, "C.P. Test". Test stations shall be complete with an insulated terminal block having the required number of terminals. (One terminal required for each conductor). Sufficient test stations to monitor underground isolation points shall be provided. Test-bond stations (potential measurement and stray current control) shall be provided to monitor pipe to soil potential of proposed underground pipes or existing underground metallic structures which may conduct stray current from the new cathodic protection system. The location of the test-bond stations shall ensure that the pipe to soil potential of metallic pipe not designated to be protected is not made less negative by the energization of the cathodic protection system. Test station terminal connections and the terminal conductor shall be permanently tagged to identify each termination of the conductors (e.g. identify the conductors connected to the protected structures). Conductors shall be permanently identified in the station by means of plastic or metal tags, or plastic sleeves to indicate termination. Each conductor shall be color coded in accordance with the drawings. The station test facility, including permanent Cu-Cu S04 reference cells if required and test returns shall be installed as indicated. Pavement inserts shall be nonmetallic and shall allow Cu-Cu S04 reference electrode to contact the electrolyte beneath the pavement surface. Abbreviations shall not be used. Welding of electrical connections shall be as follows: Exothermic welds shall be "CADweld", "Thermo-weld", or approved equal. Use and selection of these materials and welding equipment shall be in accordance with the manufacturer's recommendations.

2.4.8 Calibrated Shunts

Shunts calibrated in current per potential (e.g. A/mV) shall be installed between the lead or header wire connected to the anode and the current collector lead connected to the structure. The calibration of the shunt shall be clearly marked and installed to be visible.

2.4.9 Sealing and Dielectric Compound

Sealing and dielectric compound shall be a black, rubber based compound that is soft, permanently pliable, tacky, moldable, and unbacked. Compound shall be applied as recommended by the manufacturer, but not less than 1/8 inch thick.

2.4.10 Protective Covering

Except as otherwise specified, protective covering for underground metallic components including pipe and fittings shall be applied mechanically in a factory or field plant specially equipped for the purpose. Valves and fittings that cannot be coated and wrapped mechanically shall have the

protective covering applied by hand, preferably at the plant applying the covering to the pipe. Joints shall be coated and wrapped by hand. Hand coating and wrapping shall produce a covering equal in thickness to the covering applied mechanically. Piping and components installed in valve boxes or manholes shall also receive the specified protective coating.

2.4.10.1 Pipeline Metallic Components

Underground metallic pipelines and structures shall have a good quality factory applied coating. This includes carbon steel, stainless steel, cast iron and ductile iron pipelines or vessels.

2.4.10.2 Field Joints

Field joints shall be coated with material compatible with the pipeline coating compound. The joint coating material shall be applied to an equal thickness as the pipeline coating. Unbonded coatings shall not be used on buried metallic piping. This prohibition includes unbonded polymer wraps or tubes.

2.4.10.3 Inspection of Pipe Coatings

Once the pipeline or vessel is set in the trench, an inspection of the coating shall be conducted. This inspection shall include electrical holiday detection as described in paragraph TESTS AND MEASUREMENTS.

2.4.10.4 Above Ground Piping System

Above ground piping, other than stainless steel, shall be given two coats of exterior oil paint. Surface preparation shall be as recommended by paint manufacturer, except as follows: ferrous, shop primed surfaces shall be touched up with ferrous metal primer; surfaces that have not been shop primed shall be solvent cleaned; surfaces that contain loose rust, mil scale, or other foreign substances shall be mechanically cleaned by power wire brushing and primed with ferrous metal primer; and primed surfaces shall be finished with two coats of exterior oil paint or vinyl paint.

2.4.11 Preformed Sheaths

Preformed sheaths for encapsulating electrical wire splices to be buried underground shall fit the insulated wires entering the spliced joint.

2.4.12 Epoxy Potting Compound

Epoxy potting compound for encapsulating electrical wire splices to be buried underground shall be a two package system made for the purpose.

2.4.13 Backfill Shields

Backfill shields shall consist of approved pipeline wrapping or fiberglass reinforced, coal-tar impregnated tape, or plastic weld caps, specifically made for the purpose.

2.4.14 Electrical Tape

Pressure-sensitive vinyl plastic electrical tape shall conform to UL 510.

2.4.15 Cable Marker Tape

Traceable marker tape shall be manufactured for the purpose and clearly labeled "Cathodic Protection Cable Buried Below".

2.4.16 Electrically Isolating Pipe Joints

Electrically isolating pipe joints for above or below ground use shall be flexible, mechanical pipe couplings of an electrically isolating type consisting of bolted or compression design provided with electrically isolating joint harness if required to provide pull-out strength or flexible, integral electrically isolating pipe couplings designed for field installation by means of a swaging system and providing pull-out strength with a factor of safety or nonflexible flanged type electrically isolating pipe joints to be field assembled or nonflexible factory assembled electrically isolating pipe joints designed with stub ends for installation by welding and providing pull-out strength with a factor of safety.

2.4.16.1 Threaded Fittings

Threaded type electrically isolating pipe joints shall have molded plastic screw threads and be used above ground only. Machined plastic screw threads shall not be used.

2.4.16.2 Electrically Isolating Pipe Joints

Electrically isolating pipe joints shall be of a type that is in regular factory production.

2.4.17 Electrically Conductive Couplings

Electrically conductive couplings shall be of a type that has a published maximum electrical resistance rating given in the manufacturer's literature. Cradles and seals shall be of a type that is in regular factory production made for the purpose of electrically isolating the carrier pipe from the casing and preventing the incursion of water into the annular space.

2.4.18 Joint and Continuity Bonds

Bonds shall be provided across joints or any electrically discontinuous connections in the piping, and other pipes and structures with other than welded or threaded joints included in this cathodic protection system. Unless otherwise specified, bonds between structures and across joints in pipe with other than welded or threaded joints shall be with No. 6 AWG stranded copper cable with polyethylene insulation. Bonds between structures shall contain sufficient slack for any anticipated movement between structures. Bonds across pipe joints shall contain a minimum of 4 inches of slack to allow for pipe movement and soil stress. Bonds shall be attached by exothermic welding. Exothermic weld areas shall be insulated with coating compound and approved by the Contracting Officer. Continuity bonds shall be installed as necessary to reduce stray current interference. Additional joint bonding shall be done where determined during construction or testing or as directed. Joint bonding shall include excavation and backfilling. There shall be a minimum of 2 continuity bonds between each structure and other than welded or threaded joints. Electrical continuity shall be tested across joints with other than welded or threaded joints and across metallic portions of sewage lift stations and water booster stations.

2.4.18.1 Resistance Bonds

Resistance bonds shall be adjusted for minimum interference while achieving the criteria of protection. Alternate methods may be used when approved.

2.4.18.2 Stray Current Measurements

Stray current measurements shall be performed as indicated. Alternate methods may be used when approved. The stray current test report shall indicate location of test, type of pipes tested, method of testing.

2.4.19 Electrical Isolation of Structures

Isolating fittings, including isolating flanges and couplings, shall be installed above ground or in a concrete hand hole. As a minimum, isolating flanges or unions shall be provided at the following locations:

a. Connection of new piping to existing pipes.

b. Pressure piping under floor slab to a building.

Additionally, isolation shall be provided between new pipe lines and foreign pipes that cross the new lines within 10 feet.

PART 3 EXECUTION

3.1 CRITERIA OF PROTECTION

Acceptance criteria for determining the adequacy of protection on a buried pipe or tank shall be in accordance with NACE RP0169, and NACE RP0193, and NACE RP0285 and as specified below.

3.1.1 Iron and Steel

The following method a. shall be used for testing cathodic protection voltages. If more than one method is required, method b. shall be used:

a. A negative voltage of at least minus 1000 millivolts as measured between the pipe or tank or specified underground component and a saturated copper-copper sulphate reference electrode contacting the (electrolyte) earth directly over the pipe. Determination of this voltage shall be made with the cathodic protection system in operation. Voltage drops shall be considered for valid interpretation of this voltage measurement. A minimum of minus 1000 millivolts "instant off" potential between the pipe or tank being tested and the reference cell shall be achieved over 95 percent of the area of the structure. Adequate number of measurements shall be obtained over the entire structure, pipe, tank, or other metallic component to verify and record achievement of minus 1000 millivolts "instant off". This potential shall be obtained over 95 percent of the total metallic area.

b. A minimum polarization voltage shift of 100 millivolts as measured between the pipe or tank and a saturated copper-copper sulphate reference electrode contacting the earth directly over the pipe or tank. This polarization voltage shift shall be determined by interrupting the protective current and measuring the polarization decay. When the protective current is interrupted, an immediate

voltage shift will occur. The voltage reading, after the immediate shift, shall be used as the base reading from which to measure polarization decay. Measurements achieving 100 millivolts shall be made over 95 percent of the metallic surface.

## 3.2 GROUND BED INSTALLATION

### 3.2.1 Deep Anode Ground Beds

Deep anode ground beds shall consist of an installation of anodes supported one above the other and supported in place by the connecting cable. Deep anode ground beds shall be installed in accordance with NACE RP0572 and as specified in these specifications.

#### 3.2.1.1 Casing

The casing shall be to a depth and elevation of not more than 50 feet.

#### 3.2.1.2 Casing Insulation

The portion of casing above the top anode shall be pvc.

#### 3.2.1.3 Anode Requirements

Anode sizes, spacing, number of anodes, depth of well, and other details shall be as shown.

#### 3.2.1.4 Anode Lead Wire

Each anode shall have a separate, continuous wire extending from the anode to the junction box at the well head.

#### 3.2.1.5 Anode Cables

Anode cables shall terminate in a nearby junction box, equipped with individual anode current shunts.

#### 3.2.1.6 Anode and Cable Installation

If the method of installation utilizes backfill support for anodes and cable, slack in the cable near each anode shall be provided and the cable insulation shall be increased in thickness from 7/64 to 5/32 inch utilizing an approved composite of plastic and elastomeric materials.

#### 3.2.1.7 Backfill

The well shall be backfilled with calcined petroleum coke breeze surrounding the anodes by a method that does not leave voids or bridging. The recommended method is to pump the backfill from the bottom upward. The well shall be over-filled with coke breeze allowing for settlement so that the settled level after a number of days is as high as the level shown. 24 hours shall be allowed for settling. If the top level of coke breeze is below the level shown after settlement, additional coke breeze shall be put in the well. The backfill used shall not require tamping. The top portion of the well shall be sealed for 25 feet to prevent surface water run-off. All vents shall be vented above the high water mark and at a safe height. The groundbed shall be drilled and completed in accordance with the State of Virginia requirements.

3.2.1.8 Cable Marker Tape

Traceable marker tape shall be located in the same trench above cathodic protection cables including structure leads, anode leads, anode header cables, test station leads, bonding cables, and rectifier electrical power cables. This tape shall be 8" below surface of ground.

3.2.1.9 Pavement Inserts (Test Stations and Access Ports)

Pavement inserts shall be installed at a minimum of 100 foot intervals for pipelines. The pavement inserts shall be installed directly over the structure being protected and tested or mid-point between two pipelines that are not more than four (4) feet apart.

3.3 MISCELLANEOUS INSTALLATION

3.3.1 Rectifier Installation

Mounting shall be as shown. Pole or wall mounting shall be equipped with a channel bracket, lifting eyes, and a keyhole at the top.

3.3.2 Wire Connections

3.3.2.1 Wire Splicing

Connecting wire splicing shall be made with copper compression connectors or exothermic welds, following instructions of the manufacturer. Split-bolt type connectors shall not be used.

3.3.2.2 Steel Surfaces

Connections to ferrous pipe or metal tanks shall be made by exothermic weld methods as manufactured by an approved manufacturer for the type of pipe or tank. Electric arc welded connections and other types of welded connections to ferrous pipe and structures shall be approved before use.

3.3.3 Pipe Joints

3.3.3.1 Electrical Continuity

Underground pipe shall be electrically continuous except at places where electrically isolating joints are specified. Pipe joined by means other than welding shall meet the following electrical continuity requirements:

a. Mechanical joints that are not factory designed to provide electrical continuity shall be bonded by installing a metallic bond across the joint. The bonding connections shall be made by the exothermic welding process.

b. Mechanical joints designed to provide electrical continuity may be used.

3.3.3.2 Coating

Mechanical joints and fittings of either the electrically conductive or insulating type shall be coated with an underground type dielectric coating system. Where external electrical continuity bonds are installed across mechanical joints, bare or exposed metal, welds, bare wire and exposed coupling parts shall be coated with a coating system.

3.3.3.3 Electrical Isolation of Structures

Electrical isolation of structures shall be as follows:

a. Isolating Fittings: Isolating flanges and couplings shall be installed aboveground, or within manholes, wherever possible. Isolating flanges and couplings in lines entering buildings shall be located at least 12 inches above grade or floor level. Pipelines entering buildings either below or above ground shall be electrically isolated from the structure wall with an electrically isolating wall sleeve.

b. Fuel: Electrical isolation shall be provided in each pipe at the building and at the tank as shown. Electrical isolation is also needed inside each fueling pit.

c. Underground Storage Tanks (UST): Tanks shall be electrically isolated from other underground metallic pipes and structures. Components protected with the tank such as pipes, vents, anchors, and fill pipes shall be bonded to the tank.

3.3.4 Casing

Where a pipeline is installed in a casing under a roadway or railway, the pipeline shall be electrically isolated from the casing, and the annular space sealed against incursion of water. The pipeline shall be electrically isolated from the casing. Test stations shall be installed at each end of the casing.

3.3.5 Test Stations

Test stations shall be of the type and location shown and shall be curb box mounted. Buried electrically isolating joints shall be provided with test wire connections brought to a test station. Changes in designated location shall have prior approval. Unless otherwise shown, other test stations shall be located as follows:

a. At 100 foot intervals or less.

b. Where the pipe or conduit crosses any other metal pipe.

c. At both ends of casings under roadways and railways.

d. Where both ends of an insulating joint are not accessible above ground for testing purposes.

3.4 TESTS AND MEASUREMENTS

3.4.1 Baseline Potentials

Each test and measurement will be witnessed by the Contracting Officer. The Contractor shall notify the Contracting Officer a minimum of 5 working days prior to each test. After backfill of the pipe and tank and anodes is completed, but before the anodes are connected to the pipe or tank, the static potential-to-soil of the pipe and tank shall be measured. The locations of these measurements shall be identical to the locations specified for pipe- and tank- to-reference electrode potential measurements.

3.4.2 Isolation Testing

Before the anode system is connected to the pipe or tank, an isolation test shall be made at each isolating joint or fitting. This test shall demonstrate that no metallic contact, or short circuit exists between the two isolated sections of the pipe or tank. Any isolating fittings installed and found to be defective shall be reported to the Contracting Officer.

3.4.2.1 Insulation Checker

A Model 601 insulation checker, as manufactured by "Gas Electronics" or an approved equal, shall be used for isolating joint (flange) electrical testing in accordance with manufacturer's operating instructions. An isolating joint that is good will read full scale on the meter; if an isolating joint is shorted, the meter pointer will be deflected at near zero on the meter scale. Location of the fault shall be determined from the instructions and the joint shall be repaired. If an isolating joint is located inside a vault, the pipe shall be sleeved with insulator when entering and leaving the vault.

3.4.2.2 Cathodic Protection Meter

A Model B3A2 cathodic protection meter, as manufactured by "M. C. Miller" or an approved equal using the continuity check circuit shall be used for isolating joint (flange) electrical testing. This test shall be performed in addition to the Model 601 insulation checker. Continuity is checked across the isolated joint after the test lead wire is shorted together and the meter adjusted to scale. A full scale deflection indicates the system is shorted at some location. The Model 601 verifies that the particular insulation under test is good and the Model B3A2 verifies that the system is isolated. If the system is shorted, further testing shall be performed to isolate the location of the short.

3.4.3 Anode Output

After the rectifier is energized, the current output of the individual anode leads shall be measured by using an approved method. This may be done with a shunt and MV meter, a low-resistance ammeter, or a clamp-on milliammeter. The total current shall be measured and compared to the sum of all anode currents and to the rectifier output current. If an individual anode output current meets or exceeds the recommended output for that anode, the system shall be turned down or balancing resistors installed. Calculation of the wattage of the resistors shall be sufficient to handle the maximum load which will be encountered on the anode lead. All measurements obtained, the date, time, and locations of all measurements shall be recorded.

3.4.4 Electrode Potential Measurements

Upon completion of the installation and with the entire cathodic protection system in operation for at least four weeks, electrode potential measurements shall be made using a copper-copper sulphate reference electrode and a potentiometer-voltmeter, or a direct current voltmeter having an internal resistance (sensitivity) of not less than 10 megohms per volt and a full scale of 10 volts. The locations of these measurements shall be identical to the locations used for baseline potentials. The values obtained and the date, time, and locations of measurements shall be recorded.

3.4.5 Location of Measurements

3.4.5.1 Coated Piping or Conduit

For coated piping or conduit, measurements shall be taken from the reference electrode located in contact with the earth, directly over the pipe. Connection to the pipe shall be made at service risers, valves, test leads, or by other means suitable for test purposes. Pipe to soil potential measurements shall be made at intervals not exceeding 100 feet and at each test station. The Contractor may use a continuous pipe to soil potential profile in lieu of 2.5 ft interval pipe to soil potential measurements. Potentials shall be plotted versus distance to an approved scale. Locations where potentials do not meet or exceed the criteria shall be identified and reported to the Contracting Officer.

3.4.5.2 Underground Tanks

For underground tanks, measurements shall be taken from the reference electrode located:

a. At a point directly over the tank and midway between each pair of anodes.

A minimum of three measurements shall be made.

3.4.6 Casing Tests

Before final acceptance of the installation, the electrical separation of carrier pipe from casings shall be tested and any short circuits corrected.

3.4.7 Interference Testing

Before final acceptance of the installation, interference tests shall be made with respect to any foreign pipes in cooperation with the owner of the foreign pipes. A full report of the tests giving all details shall be made.

3.4.8 Holiday Test

Any damage to the protective covering during transit and handling shall be repaired before installation. After field coating and wrapping has been applied, the entire pipe shall be inspected by an electric holiday detector with impressed current in accordance with NACE RP0188 using a full ring, spring type coil electrode. The holiday detector shall be equipped with a bell, buzzer, or other type of audible signal which sounds when a holiday is detected. Holidays in the protective covering shall be repaired upon detection. Occasional checks of holiday detector potential will be made by the Contracting Officer to determine suitability of the detector. Labor, materials, and equipment necessary for conducting the inspection shall be furnished by the Contractor. The coating system shall be inspected for holes, voids, cracks, and other damage during installation.

3.4.9 Recording Measurements

All pipe- and tank-to-soil potential measurements including initial potentials where required shall be recorded. The Contractor shall locate, correct and report to Contracting Officer any short circuits to pipes or tanks encountered during checkout of the installed cathodic protection system. Pipe- and Tank-to-soil potential measurements are required on as

many pipes or tanks as necessary to determine the extent of protection or to locate short-circuits.

## 3.5 TRAINING COURSE

The Contractor shall conduct a training course for the operating staff as designated by the Contracting Officer. The training period shall consist of a total of 16 hours of normal working time and shall start after the system is functionally completed but prior to final acceptance tests. The field instructions shall cover all of the items contained in the operating and maintenance instructions, as well as demonstrations of routine maintenance operations, including testing procedures included in the maintenance instructions. At least 14 days prior to date of proposed conduction of the training course, the training course curriculum shall be submitted for approval, along with the proposed training date. Training shall consist of demonstration of test equipment, providing forms for test data and the tolerances which indicate that the system works satisfactorily. All test points should be identified.

-- End of Section --

SECTION TABLE OF CONTENTS

DIVISION 13 - SPECIAL CONSTRUCTION

SECTION 13120A

STANDARD METAL BUILDING SYSTEMS

**01/02**

PART 1 GENERAL

1.1 REFERENCES
1.2 SUBMITTALS
1.3 DRAWINGS
1.4 Instruction Manuals
1.5 Metal Building Systems
1.6 GENERAL REQUIREMENTS
1.6.1 Building Configuration
1.6.2 Qualifications
1.6.2.1 Manufacturer
1.6.2.2 Installer
1.6.2.3 Manufacturer's Representative
1.7 DESIGN REQUIREMENTS
1.7.1 Dead Loads
1.7.2 Collateral Loads
1.7.3 Roof Live Loads
1.7.3.1 Uniform Loads
1.7.3.2 Concentrated Loads
1.7.4 Roof Snow Loads
1.7.5 Wind Loads
1.7.6 Seismic Loads
1.7.7 Impact Loads
1.7.8 Foundations
1.7.9 Framing and Structural Members
1.7.10 Roofing and Siding
1.7.11 Provisions for Gutters And Downspouts
1.7.12 Provisions for Louvers
1.7.13 Drift Provisions
1.7.14 Cranes
1.7.15 Grounding and Lightning Protection
1.8 DESIGN ANALYSIS
1.9 DELIVERY AND STORAGE
1.10 WARRANTIES
1.10.1 Prime Contractor's Weathertightness Warranty
1.10.2 Manufacturer's Material and/or System Weathertightness Warranties
1.11 COORDINATION MEETING

PART 2 PRODUCTS

2.1 BUILDING COMPONENTS
2.2 FRAMING AND STRUCTURAL MEMBERS
2.3 ROOFING AND SIDING
2.3.1 Roofing
2.3.2 Siding

2.3.3 Steel Panels
2.3.4 Aluminum Panels
2.3.5 Factory Color Finish
2.3.5.1 Salt Spray Test
2.3.5.2 Formability Test
2.3.5.3 Accelerated Weathering, Chalking Resistance and Color Change
2.3.5.4 Humidity Test
2.3.5.5 Impact Resistance
2.3.5.6 Abrasion Resistance Test
2.3.5.7 Specular Gloss
2.3.5.8 Pollution Resistance
2.3.6 Accessories
2.4 WALL LINERS
2.5 FASTENERS
2.5.1 Screws
2.5.2 End-Welded Studs
2.5.3 Explosive Actuated Fasteners
2.5.4 Blind Rivets
2.5.5 Bolts
2.6 GUTTERS AND DOWNSPOUTS
2.7 LOUVERS
2.8 DOORS
2.8.1 Hinged Doors
2.9 INSULATION
2.9.1 Rigid Board Insulation
2.9.1.1 Polyisocyanurate
2.9.1.2 Polystyrene
2.9.1.3 Mineral Fiber
2.9.1.4 Blanket Insulation
2.9.1.5 Insulation Retainers
2.10 SEALANT
2.11 GASKETS AND INSULATING COMPOUNDS
2.12 VAPOR RETARDER
2.12.1 Vapor Retarders as Integral Facing
2.12.2 Vapor Retarders Separate from Insulation
2.13 SHOP PRIMING

PART 3 EXECUTION

3.1 ERECTION
3.1.1 Framing Members and Anchor Bolts
3.1.2 Roofing and Siding Installation
3.1.3 Installation of Gutters and Downspouts
3.1.4 Louvers
3.1.5 Doors
3.1.6 Insulation Installation
3.1.6.1 Board Insulation with Blanket Insulation
3.1.6.2 Blanket Insulation
3.1.7 Vapor Retarder Installation
3.1.7.1 Integral Facing on Blanket Insulation
3.1.7.2 Polyethylene Vapor Retarder
3.1.8 Wall Liner
3.2 SPECIAL INSPECTION AND TESTING FOR SEISMIC-RESISTING SYSTEMS
3.3 FIELD PAINTING

-- End of Section Table of Contents --

SECTION 13120A

STANDARD METAL BUILDING SYSTEMS
**01/02**

PART 1 GENERAL

1.1 REFERENCES

The publications listed below form a part of this specification to the extent referenced. The publications are referred to in the text by basic designation only.

ALUMINUM ASSOCIATION (AA)

| | |
|---|---|
| AA ADM | (2000) Aluminum Design Manual |
| AA ASD1 | (1997) Aluminum Standards and Data |

AMERICAN INSTITUTE OF STEEL CONSTRUCTION (AISC)

| | |
|---|---|
| AISC 335 | (1989) Specification for Structural Steel Buildings - Allowable Stress Design, Plastic Design |
| AISC FCD | (1995a) Quality Certification Program |
| AISC 303 | (2000) Code of Standard Practice for Steel Buildings and Bridges |
| AISC 348 | (2000) Structural Joints Using ASTM A325 or A490 Bolts |
| AISC 350 | (1999) Load and Resistance Factor Design (LRFD)Specification for Structural Steel Buildings |

AMERICAN IRON AND STEEL INSTITUTE (AISI)

| | |
|---|---|
| AISI SG-973 | (1996) Cold-Formed Steel Design Manual |

AMERICAN SOCIETY FOR TESTING AND MATERIALS (ASTM)

| | |
|---|---|
| ASTM A 252 | (1998) Welded and Seamless Steel Pipe Piles |
| ASTM A 325 | (2002) Structural Bolts, Steel, Heat Treated, 120/105 ksi Minimum Tensile Strength |
| ASTM A 36/A 36M | (2001) Carbon Structural Steel |
| ASTM A 463/A 463M | (2000) Steel Sheet, Aluminum-Coated, by the Hot-Dip Process |

| | |
|---|---|
| ASTM A 490 | (2002) Structural Bolts, Alloy Steel, Heat-Treated, 150 ksi Minimum Tensile Strength |
| ASTM A 490M | (2000) High-Strength Steel Bolts, Classes 10.9 and 10.9.3, for Structural Steel Joints (Metric) |
| ASTM A 500 | (2001a) Cold-Formed Welded and Seamless Carbon Steel Structural Tubing in Rounds and Shapes |
| ASTM A 501 | (1999) Hot-Formed Welded and Seamless Carbon Steel Structural Tubing |
| ASTM A 529/A 529M | (2000) High-Strength Carbon-Manganese Steel of Structural Quality |
| ASTM A 53/A 53M | (2002) Pipe, Steel, Black and Hot-Dipped, Zinc-Coated, Welded and Seamless |
| ASTM A 570/A 570M | (1998) Steel, Sheet and Strip, Carbon, Hot-Rolled, Structural Quality |
| ASTM A 572/A 572M | (2000a) High-Strength Low-Alloy Columbium-Vanadium Structural Steel |
| ASTM A 588/A 588M | (2000a) High-Strength Low-Alloy Structural Steel with 50 ksi (345 MPa) Minimum Yield Point to 4 in. (100 mm) Thick |
| ASTM A 606 | (1998) Steel, Sheet and Strip, High-Strength, Low-Alloy, Hot-Rolled and Cold-Rolled, with Improved Atmospheric Corrosion Resistance |
| ASTM A 607 | (1998) Steel, Sheet and Strip, High-Strength, Low-Alloy, Columbium or Vanadium, or Both, Hot-Rolled and Cold-Rolled |
| ASTM A 618 | (1999) Hot-Formed Welded and Seamless High-Strength Low-Alloy Structural Tubing |
| ASTM A 653/A 653M | (2000) Steel Sheet, Zinc-Coated (Galvanized) or Zinc-Iron Alloy-Coated (Galvannealed) by the Hot-Dip Process |
| ASTM A 792/A 792M | (1999) Steel Sheet, 55% Aluminum-Zinc Alloy-Coated by the Hot-Dip Process |
| ASTM B 209 | (2001) Aluminum and Aluminum-Alloy Sheet and Plate |
| ASTM B 221 | (2000) Aluminum and Aluminum-Alloy Extruded Bars, Rods, Wire, Profiles, and Tubes |

| | |
|---|---|
| ASTM B 241/B 241M | (2000) Aluminum and Aluminum-Alloy Seamless Pipe and Seamless Extruded Tube |
| ASTM B 308/B 308M | (2000) Aluminum-Alloy 6061-T6 Standard Structural Profiles |
| ASTM B 429 | (2000) Aluminum-Alloy Extruded Structural Pipe and Tube |
| ASTM C 1289 | (2001) Faced Rigid Cellular Polyisocyanurate Thermal Insulation Board |
| ASTM C 518 | (1998) Steady-State Heat Flux Measurements and Thermal Transmission Properties by Means of the Heat Flow Meter Apparatus |
| ASTM C 578 | (2001) Rigid, Cellular Polystyrene Thermal Insulation |
| ASTM C 612 | (2000a) Mineral Fiber Block and Board Thermal Insulation |
| ASTM C 991 | (1998) Flexible Glass Fiber Insulation for Pre-Engineered Metal Buildings |
| ASTM D 1308 | (1987; R 1998) Effect of Household Chemicals on Clear and Pigmented Organic Finishes |
| ASTM D 1654 | (1992; R 2000) Evaluation of Painted or Coated Specimens Subjected to Corrosive Environments |
| ASTM D 2244 | (1995) Calculation of Color Differences from Instrumentally Measured Color Coordinates |
| ASTM D 2247 | (1999) Testing Water Resistance of Coatings in 100% Relative Humidity |
| ASTM D 2794 | (1993; R 1999el) Resistance of Organic Coatings to the Effects of Rapid Deformation (Impact) |
| ASTM D 3359 | (1997) Measuring Adhesion by Tape Test |
| ASTM D 4141 | (1995) Satandard Practice for Conducting Accelerated Outdoor Exposure Tests of Coatings |
| ASTM D 4214 | (1998) Evaluating Degree of Chalking of Exterior Paint Films |
| ASTM D 4397 | (1996) Polyethylene Sheeting for Construction, Industrial, and Agricultural Applications |
| ASTM D 522 | (1993a) Mandrel Bend Test of Attached Organic Coatings |

| | |
|---|---|
| ASTM D 523 | (1989; R 1999) Specular Gloss |
| ASTM D 5894 | (1996) Standard Practice for Cyclic Salt Fog/UV Exposure of Painted Metal, (Alternating Exposures in a Fog/Dry Cabinet and a UV/Condensation Cabinet) |
| ASTM D 610 | (1995) Evaluating Degree of Rusting on Painted Steel Surfaces |
| ASTM D 714 | (1987; R 1994el) Evaluating Degree of Blistering of Paints |
| ASTM D 968 | (1993) Abrasion Resistance of Organic Coatings by Falling Abrasive |
| ASTM E 84 | (2001) Surface Burning Characteristics of Building Materials |
| ASTM E 96 | (2000e1) Water Vapor Transmission of Materials |

AMERICAN SOCIETY OF CIVIL ENGINEERS (ASCE)

| | |
|---|---|
| ASCE 7 | (1998) Minimum Design Loads for Buildings and Other Structures |

AMERICAN WELDING SOCIETY (AWS)

| | |
|---|---|
| AWS D1.1/D1.1M | (2002) Structural Welding Code - Steel |

CRANE MANUFACTURERS ASSOCIATION OF AMERICA (CMAA)

| | |
|---|---|
| CMAA 70 | (1994) Electric Overhead Traveling Cranes |

U.S. FEDERAL EMERGENCY MANAGEMENT AGENCY (FEMA)

| | |
|---|---|
| FEMA 302 | (Feb 1998) NEHRP Recommended Provisions for Seismic Regulations for New Buildings and Other Structures |

METAL BUILDING MANUFACTURERS ASSOCIATION (MBMA)

| | |
|---|---|
| MBMA Low Rise Manual | (1996) Low Rise Metal Building Systems Manual |

SHEET METAL & AIR CONDITIONING CONTRACTORS' NATIONAL ASSOCIATION (SMACNA)

| | |
|---|---|
| SMACNA Arch. Manual | (1993; Errata; Addenda Oct 1997) Architectural Sheet Metal Manual |

U.S. ARMY CORPS OF ENGINEERS (USACE)

| | |
|---|---|
| TI 809-07 | (1998) Design of Cold-Formed Load Bearing Steel Systems and Masonry Veneer/Steel Stud Walls |

UNDERWRITERS LABORATORIES (UL)

UL 580 (1994; Rev thru Feb 1998) Tests for Uplift Resistance of Roof Assemblies

1.2 SUBMITTALS

Government approval is required for submittals with a "G" designation; submittals not having a "G" designation are for information only. When used, a designation following the "G" designation identifies the office that will review the submittal for the Government. The following shall be submitted in accordance with Section 01330 SUBMITTAL PROCEDURES:

SD-02 Shop Drawings

Drawings; G-AE

Detail drawings consisting of catalog cuts, design and erection drawings, and an isometric view of the roof showing the design wind uplift pressure and dimensions of edge and corner zones. Shop painting and finishing specifications. Anchor bolt placement plan and column reactions.

SD-03 Product Data

Design Analysis; G-AE

Design analysis (building and foundations including anchor bolt plans) as one package with the drawings. Include foundation analysis only if foundation redesign is required.

Instruction Manuals; G-AE

Manufacturer's literature for individual building component systems.

Erection; G-AE

Manufacturer's erection instruction and erection drawings describing the preparation requirements, assembly sequence, temporary bracing, shoring, and related information necessary for erection of the metal building including its structural framework and components.

Qualifications;

Qualifications of the manufacturer, the manufacturer's Representative when one is used, and qualifications and experience of the building erector. A brief list of locations where buildings of similar design have been used shall be included with the detail drawings and shall also include information regarding date of completion, name and address of owner, and how the structure is used.

SD-04 Samples

Accessories; G-AE

One sample of each type of flashing, trim, closure, cap and similar items. Size shall be sufficient to show construction and configuration.

Roofing and Siding; G-AE

One piece of each type and finish (exterior and interior) to be used, 9 inches long, full width. The sample for factory color finished covering shall be accompanied by certified laboratory test reports showing that the sheets to be furnished are produced under a continuing quality control program and that a representative sample consisting of not less than 5 pieces has been tested and has met the quality standards specified for factory color finish.

Fasteners; G-AE

Two samples of each type to be used, with statement regarding intended use. If so requested, random samples of bolts, nuts, and washers as delivered to the job site shall be taken in the presence of the Contracting Officer and provided to the Contracting Officer for testing to establish compliance with specified requirements.

Insulation; G-AE

One piece of each type to be used, and descriptive data covering installation.

Gaskets and Insulating Compounds; G-AE

Two samples of each type to be used and descriptive data.

Sealant; G-AE

One sample, approximately 1 pound, and descriptive data.

Wall Liners; G-AE

One piece, 9 inches long, full width.

SD-07 Certificates

Metal Building Systems;

a. A Certificate from the metal building manufacturer stating that the metal building was designed from a complete set of the contract drawings and specifications and that the building furnished complies with the specified requirements.

b. Mill certification for structural bolts, framing steel, roofing and siding, and steel wall liner panels.

c. Warranty certificate. At the completion of the project the Contractor shall furnish signed copies of the 5-year Warranty for Metal Building System, a sample copy of which is attached to this section, the 20-year Manufacturer's Material Warranties, and the Manufacturer's 20-year System Weathertightness Warranty when one is required.

Insulation; G-AE

Certificate attesting that the polyisocyanurate insulation furnished for the project contains recovered material, and showing an estimated percent of such recovered material.

1.3 DRAWINGS

Detail drawings consisting of catalog cuts, design and erection drawings, and an isometric view of the roof showing the design wind uplift pressure and dimensions of edge and corner zones. Shop painting and finishing specifications. Anchor bolt placement plan and column reactions.

1.4 Instruction Manuals

Manufacturer's literature for individual building component systems.

1.5 Metal Building Systems

a. A Certificate from the metal building manufacturer stating that the metal building was designed from a complete set of the contract drawings and specifications and that the building furnished complies with the specified requirements.

b. Mill certification for structural bolts, framing steel, roofing and siding, and steel wall liner panels.

c. Warranty certificate. At the completion of the project the Contractor shall furnish signed copies of the 5-year Warranty for Metal Building System, a sample copy of which is attached to this section, the 20-year Manufacturer's Material Warranties, and the Manufacturer's 20-year System Weathertightness Warranty when one is required.

1.6 GENERAL REQUIREMENTS

The metal building system covered under this specification shall be provided by a single manufacturer and shall include all components and assemblies that form a building. Structural Standing Seam Metal Roofing System, when specified, shall be furnished as part of a single manufacturer's system.

1.6.1 Building Configuration

Buildings shall have structural steel main building frames, and secondary framing including purlins and girts, engineered and fabricated by the building systems supplier. Buildings shall have vertical steel walls and gable roof system including gutters and downspouts . Roof slope shall be as shown on the drawings. Building shall be single-span structure with rigid frame. Exterior doors and louvers shall be included in the metal building system. Building dimensions shall be not less than those indicated. The minimum inside clear dimensions shall be as shown on the drawings.

1.6.2 Qualifications

1.6.2.1 Manufacturer

Metal building shall be the product of a recognized steel building systems

manufacturer who has been in the practice of manufacturing steel building systems for a period of not less than 5 years. The manufacturer shall be chiefly engaged in the practice of designing and fabricating steel building systems. The manufacturer shall be certified under the Metal Building Systems (MB) Certification Program, AISC FCD. Structural framing and covering shall be designed by a licensed Professional Engineer experienced in design of this work.

1.6.2.2 Installer

Erector shall have specialized experience in the erection of steel building systems for a period of at least 3 years. Framing shall be erected in accordance with MBMA Low Rise Manual, common industry practices and erection instructions describing the basic sequence of assembly, temporary bracing, shoring, and related information necessary for erection of the metal building including its structural framework and components. The erector shall furnish temporary guys and bracing where needed for squaring, plumbing, and securing the structural framing against loads acting on the exposed framing, such as wind loads and seismic forces, as well as loads due to erection equipment and erection operation. Bracing furnished by the manufacturer for the metal building system shall not be assumed to be adequate during erection. Structural members shall not be field cut or altered without approval of the metal building manufacturer. Welds, abrasions, and surfaces not shop primed shall be primed after erection.

1.6.2.3 Manufacturer's Representative

A representative designated by the building manufacturer, who is familiar with the design of the building supplied and experienced in the erection of metal buildings similar in size to the one required under this contract, shall be present at the job site during construction, from the start of the structural framing erection until completion of the installation of the exterior covering, to assure that the building is erected properly.

1.7 DESIGN REQUIREMENTS

Criteria and definitions shall be in accordance with MBMA Low Rise Manual, except criteria for seismic loads which shall be in accordance with FEMA 302 and all other loads and load combinations in accordance with ASCE 7.

1.7.1 Dead Loads

The dead load shall consist of the weight of all permanent construction such as roof, framing, covering members and all other materials of the building system.

1.7.2 Collateral Loads

Collateral load of 4 pounds per square foot shall be applied to the entire structure to account for the weight of additional permanent materials other than the building system, such as sprinklers, mechanical systems, electrical systems, hung partitions, and ceilings. This allowance does not include the weight of hung equipment weighing 50 pounds or more. Equipment loads of 50 pounds or more shall be shown on the shop (detail) drawings and the structure (frame, purlins, girts) shall be strengthened as required. See the mechanical and electrical sheets for suspended equipment in the pump house building. The Contractor is responsible for providing the building manufacturer the magnitude and approximate location of all concentrated loads greater than 50 pounds before design of the building

commences.

1.7.3 Roof Live Loads

1.7.3.1 Uniform Loads

Uniform roof live loads, including maintenance traffic and construction loads of 20 pounds per square foot, shall be determined and applied in accordance with ASCE 7.

1.7.3.2 Concentrated Loads

In addition to ASCE 7 roof live loads, a minimum design concentrated load of 300 pounds shall be used to simulate a construction load on roof panels. The concentrated load shall be applied at the panel midspan and shall be resisted by a single standing seam metal roof panel, or a 24 inches wide corrugated metal panel, assumed to be acting as a beam. The undeformed shape of the panel shall be used to determine the section properties.

1.7.4 Roof Snow Loads

The design roof snow loads, including effects of drifting, shall be determined and applied in accordance with ASCE 7 using a ground snow load of 10 psf, a thermal factor of 1.1, and an importance factor of 1.2.

1.7.5 Wind Loads

Wind pressures shall be computed and applied in accordance with ASCE 7 using a basic wind speed of 110 mph (3 second gust), and importance factor of 1.15, and exposure C.

1.7.6 Seismic Loads

Seismic loads shall be computed in accordance with FEMA 302 using a short period spectral acceleration (SDS) of 0.15 and a one second spectral acceleration (SD1) of 0.06 and seismic use group of IIIE. Building importance factor shall be 1.5.

1.7.7 Impact Loads

Impact loads due to cranes shall be applied as indicated in MBMA Low Rise Manual .

1.7.8 Foundations

The foundation system shall be designed to utilize a structural foundation mat bearing on precast driven pile. The capacity of each pile shall be 60 kips with a bottom of pile elevation located approximately 40 ft. below finish floor elevation. See Section 03300 CAST-IN-PLACE STRUCTURAL CONCRETE. The foundation was designed using estimated reactions for available buildings meeting the project requirements, controlling reactions are indicated on the drawings. The anchor bolts and any necessary shear transfer elements shall be designed and provided by the Contractor for the reactions of the supplied building. If the reactions of the building supplied by the Contractor exceed the indicated design reactions, the Contractor shall design and provide a foundation adequate to resist the reactions at no additional expense to the Government. Any Contractor-designed foundation shall maintain the basic features of the original design and shall be designed by a Registered Professional

Engineer. All design calculations shall be submitted for approval.

1.7.9 Framing and Structural Members

Structural steel members and their connections shall be designed in accordance with AISC 335 or AISC 350. Structural cold-formed steel framing members and their connections shall be designed in accordance with TI 809-07. Aluminum structural members and their connections shall be designed in accordance with AA ADM. Maximum deflection under applied live load, snow, or wind load shall not exceed 1/180th of the span length. Members with openings in their webs shall be designed with consideration of the additional stresses which will result due to the openings. Deflections of the steel framing above and along the side of commercially framed door openings shall be limited to a maximum allowable deflection of 1/360 of the opening width to ensure proper operation of the doors. The contractor shall include the loads that the door transfers to the building frame in the design. Framed openings shall be designed to structurally replace the covering and framing displaced. The subpurlin and/or purlin spacing shall not exceed 30 inches on centers at the corner, edge and ridge zones, and 5 foot maximum on centers for the remainder of the roof. The maximum deflection of steel framing that provides lateral support for masonry veneer panels shall be 1/600 of the height of framing span.

1.7.10 Roofing and Siding

Except as otherwise specified, steel roofing and siding shall be designed in accordance with AISI SG-973. Aluminum roofing and siding shall be designed in accordance with AA ASD1. Section modulus and moment of inertia of aluminum sheet shall be determined for actual cross section dimensions by the conventional methods for actual design stresses and by effective width concept for deflection in accordance with AA ADM. Maximum deflection for wall and roof panels under applied live load, snow or wind loads shall not exceed 1/180th of the span length. The design analysis shall establish that the roof, when deflected under loading combinations, shall not result in ponding. Maximum deflections shall be based on sheets continuous across two or more supports with sheets unfastened and fully free to deflect. The calculated deflection from the concentrated load shall not exceed 1/180 of the span length. The methods for resisting lateral loads shall be cross-bracing, rigid frames, or wind columns.

1.7.11 Provisions for Gutters And Downspouts

Gutters and downspouts shall be designed according to the requirements of SMACNA Arch. Manual for storms which should be exceeded only once in 5 years and with adequate provisions for thermal expansion and contraction. Supports for gutters and downspouts shall be designed for the anticipated loads. Roof drainage system to withstand rainfall intensity that has been designed for local conditions in inches per hour, with 5 minute duration.

1.7.12 Provisions for Louvers

Louvers shall be fixed-blade type designed for a minimum net open area as indicated on the drawings. Louvers shall be rainproof, and to resist vibration.

1.7.13 Drift Provisions

Lateral deflections, or drift, at the roof level of a structure in relation to the floor or slab on grade, caused by deflection of horizontal force

resisting elements, shall conform to MBMA Low Rise Manual .

1.7.14 Cranes

The pumphouse shall be designed for a 1 ton capacity bridge crane, service classification A (infrequent service). Crane location shall be as indicated on the Contract drawings. The crane loads shall be obtained from the crane manufacturer and shall be applied per MBMA Low Rise Manual for the design of the crane runways and supports. The cranes, girders, rails, end trucks, stops, and bumpers shall be provided by the crane manufacturer as specified in Section 14602A CRANES, SINGLE-GIRDER BRIDGE, MONORAIL AND JIB. The connections which carry the crane vertical and lateral forces into the building frames shall be designed by the contractor or the metal building supplier and constructed to allow for the difference in required erection tolerances between the building frame and the crane support members.

1.7.15 Grounding and Lightning Protection

Grounding and lightning protection shall be provided as specified in Section 13100A LIGHTNING PROTECTION SYSTEM.

1.8 DESIGN ANALYSIS

The design analysis shall be the design of a licensed Professional Engineer experienced in design of this work and shall include complete calculations for the building, its components, including roofing and siding and the foundations. Foundations shown on the drawings are based on loads derived from a representative set of similar building types. If the loads are exceeded, the contractor shall obtain the services of a licensed Professional Engineer and provide a revised design with the design analysis. Formulas and references shall be identified. Assumptions and conclusions shall be explained, and cross-referencing shall be clear. Wind forces on various parts of the structure, both positive and negative pressure, shall be calculated with the controlling pressure summarized. Lateral forces due to seismic loading shall be calculated and tabulated for the various parts and portions of the building. Computer programmed designs shall be accompanied by stress values and a letter of certification, signed by a licensed Professional Engineer, stating the design criteria and procedures used and attesting to the adequacy and accuracy of the design. A narrative of the computer program delineating the basic methodology shall be included. Computer program output shall be annotated and supplemented with sketches to verify the input and output. Critical load conditions used in the final sizing of the members shall be emphasized. The design analysis shall include the name and office phone number of the designer, who shall function as a point of contact to answer questions during the detail drawing review.

1.9 DELIVERY AND STORAGE

Materials shall be delivered to the site in a dry and undamaged condition and stored out of contact with the ground. Materials other than framing and structural members shall be covered with weathertight coverings and kept dry. Storage accommodations for roofing and siding shall provide good air circulation and protection from surface staining.

1.10 WARRANTIES

The Metal Building System, composed of framing and structural members,

roofing and siding, gutters and downspouts, accessories, fasteners, trim, and miscellaneous building closure items such as doors and windows (when furnished by the manufacturer) shall be warranted as described below against material and workmanship deficiencies, system deterioration caused by exposure to the elements and service design loads, leaks and wind uplift damage. Any emergency temporary repairs conducted by the owner shall not negate the warranties.

1.10.1 Prime Contractor's Weathertightness Warranty

The Metal Building System shall be warranted by the Contractor on a no penal sum basis for a period of five years against materials and workmanship deficiencies; system deterioration caused by exposure to the elements and/or inadequate resistance to specified service design loads, water leaks, and wind uplift damage. The Metal Building System covered under this warranty shall include but is not limited to the following: framing and structural members, roofing and siding panels and seams, interior or exterior gutters and downspouts, accessories, fasteners, trim, flashings and miscellaneous building closure items such as doors and windows (when furnished by the manufacturer), connectors, components, and fasteners, and other system components and assemblies installed to provide a weathertight system; and items specified in other sections of these specifications that become part of the metal building system. All material and workmanship deficiencies, system deterioration caused by exposure to the elements and/or inadequate resistance to specified service design loads, water leaks and wind uplift damage shall be repaired as approved by the Contracting Officer. See the attached Contractor's written warranty for issue resolution of warrantable defects. This warranty shall warrant and cover the entire cost of repair or replacement, including all material, labor, and related markups. The Contractor shall supplement this warranty with written warranties from the installer and/or system manufacturer, which shall be submitted along with Contractor's warranty. However, the Contractor is ultimately responsible for this warranty. The Contractor's written warranty shall be as outlined in attached **WARRANTY FOR METAL BUILDING SYSTEMS,** and start upon final acceptance of the facility. The Contractor shall provide a separate bond in an amount equal to the installed total metal building system cost in favor of the owner (Government) covering the Contractor's warranty responsibilities effective throughout the five year Contractor's warranty period for the entire metal building system as outlined above.

1.10.2 Manufacturer's Material and/or System Weathertightness Warranties

The Contractor shall furnish, in writing, the following manufacturer's material warranties to the Contracting Officer which cover all Metal Building System components:

a. A manufacturer's 20 year material warranty warranting that the specified aluminum, zinc-coated steel, aluminum-zinc alloy coated steel or aluminum-coated steel will not rupture, structurally fail, fracture, deteriorate, or become perforated under normal design atmospheric conditions and service design loads. Liability under this warranty shall be limited exclusively to the cost of either repairing or replacing nonconforming, ruptured, perforated, or structurally failed securement system including fasteners and coil material.

b. A manufacturer's 20 year exterior material finish warranty on the factory colored finish warranting that the finish, under normal atmospheric conditions at the site, will not crack, peel, or delaminate; chalk in

excess of a numerical rating of eight, as determined by ASTM D 4214test procedures; or change colors in excess of five CIE or Hunter Lab color difference (delta E) units in accordance with ASTM D 2244. Liability under this warranty is exclusively limited to replacing the defective coated material.

## 1.11 COORDINATION MEETING

A coordination meeting shall be held within 45 days after contract award for mutual understanding of the metal building system contract requirements. This meeting shall take place at the building site and shall include representatives from the Contractor, the roofing/metal building system manufacturer, the roofing/metal building supplier, the erector, the designer, and the Contracting Officer. All items required by paragraph SUBMITTALS shall be discussed, including applicable standard manufacturer shop drawings, and the approval process. The Contractor shall coordinate time and arrangements for the meeting

# PART 2 PRODUCTS

## 2.1 BUILDING COMPONENTS

Each piece or part of the assembly shall be clearly and legibly marked to correspond with the drawings.

## 2.2 FRAMING AND STRUCTURAL MEMBERS

Steel 1/8 inch or more in thickness shall conform to ASTM A 36/A 36M, ASTM A 529/A 529M, ASTM A 572/A 572M, or ASTM A 588/A 588M. Uncoated steel less than 1/8 inch in thickness shall conform to ASTM A 570/A 570M, ASTM A 606, or ASTM A 607. Galvanized steel shall conform to ASTM A 653/A 653M, G 90 coating designation, 0.045 inch minimum thickness. Aluminum-zinc coated steel shall conform to ASTM A 792/A 792M, AZ 55 coating designation, )0.045 inch minimum thickness. Aluminum sheet shall conform to ASTM B 209, 0.032 inch minimum thickness. Aluminum structural shapes and tubes shall conform to ASTM B 221, or ASTM B 308/B 308M. Structural pipe shall conform to ASTM A 53/A 53M, ASTM A 252, ASTM A 500, ASTM A 501, ASTM A 618, ASTM B 221, ASTM B 241/B 241M or ASTM B 429. Holes for structural connections shall be made in the shop.

## 2.3 ROOFING AND SIDING

Roofing and siding shall be either steel or aluminum and shall have a factory color finish.

### 2.3.1 Roofing

Length of sheets shall be sufficient to cover the entire length of any unbroken roof slope unless otherwise approved. Width of sheets with standing seam shall provide not less than 12 inches of coverage in place. Provisions shall be made for thermal expansion and contraction consistent with the type of system to be used. Panel shall have configurations for overlapping sheets. Roof deck assemblies shall be Class 90 as defined in UL 580. Exposed, penetrating fastener may not be used. Height of seams shall be a minimum of 2 inches tall.

### 2.3.2 Siding

Length of sheet shall be sufficient to cover the entire height of any

unbroken height of wall surface unless otherwise approved. Width of sheets with interlocking ribs shall provide not less than 12 inches of coverage in place. Provisions shall be made for thermal expansion and contraction consistent with the type of system to be used. Siding shall have interlocking ribs for securing adjacent sheets. Siding shall be fastened to framework using concealed fasteners.

2.3.3 Steel Panels

Roofing and Siding shall be zinc-coated steel conforming to ASTM A 653/A 653M, G 90 coating designation; aluminum-zinc alloy coated steel conforming to ASTM A 792/A 792M, AZ 55 coating; or aluminum-coated steel conforming to ASTM A 463/A 463M, Type 2, coating designation T2 E5. Panels shall be 0.024 inch thick minimum, except that when the mid field of the roof is subject to design wind uplift pressures of 60 psf or greater or the steel covering is used as a diaphragm, the entire roof system shall have a minimum thickness of 0.030 inch. Prior to shipment, mill finish panels shall be treated to inhibit the formation of oxide corrosion. Panels that have become wet during shipment but have not started to oxidize shall be dried, and retreated in accordance with manufacturer's standard practice.

2.3.4 Aluminum Panels

Roofing and Siding shall be aluminum alloy conforming to ASTM B 209, temper as required for the forming operation, minimum 0.032 inch thick.

2.3.5 Factory Color Finish

Panels shall have a factory applied polyvinylidene fluoride finish on the exposed side. The exterior finish shall consist of a baked-on topcoat with an appropriate prime coat. Color shall match the color indicated on the drawings . The exterior coating shall be a nominal 2 mil thickness consisting of a topcoat of not less than 0.7 mil dry film thickness and the paint manufacturer's recommended primer of not less than 1.0 mil thickness. The interior color finish shall consist of the same coating and dry film thickness as the exterior finish 0.5 mil . The exterior color finish shall meet the test requirements specified below.

2.3.5.1 Salt Spray Test

A sample of the sheets shall withstand a cyclic corrosion test for a minimum of 2016 hours in accordance with ASTM D 5894, including the scribe requirement in the test. Immediately upon removal of the panel from the test, the coating shall receive a rating of not less than 10, no blistering, as determined by ASTM D 714; 10, no rusting, as determined by ASTM D 610 and a rating of 6, over 1/16 to 1/8 inch failure at scribe, as determined by ASTM D 1654.

2.3.5.2 Formability Test

When subjected to testing in accordance with ASTM D 522 Method B, 1/8 inch diameter mandrel, the coating film shall show no evidence of cracking to the naked eye.

2.3.5.3 Accelerated Weathering, Chalking Resistance and Color Change

A sample of the sheets shall be tested in a UV/Condensation Apparatus in accordance with ASTM D 4141 for 2 hours. Exposure conditions shall be as folows: 8 hours UV/60 degrees C followed by 4 hours CON/45 degrees C.

where UV = ultraviolet light (lamps) only and CON equals condensation conditions only. The coatings shall withstand the weathering test without cracking, peeling, blistering, loss of adhesion of the protective coating, or corrosion of the base metal. Protective coating that can be readily removed from the base metal with tape in accordance with ASTM D 3359, Test Method B, shall be considered as an area indicating loss of adhesion. Following the accelerated weathering test, the coating shall have a chalk rating not less than No. 8 in accordance with ASTM D 4214test procedures, and the color change shall not exceed 5 CIE or Hunter Lab color difference (delta E) units in accordance with ASTM D 2244. For sheets required to have a low gloss finish, the chalk rating shall be not less than No. 6 and the color difference shall be not greater than 7 units.

2.3.5.4 Humidity Test

When subjected to a humidity cabinet test in accordance with ASTM D 2247 for 1000 hours, a scored panel shall show no signs of blistering, cracking, creepage or corrosion.

2.3.5.5 Impact Resistance

Factory-painted sheet shall withstand direct and reverse impact in accordance with ASTM D 2794 0.500 inch diameter hemispherical head indenter, equal to 1.5 times the metal thickness in mils, expressed in inch-pounds, with no loss of adhesion.

2.3.5.6 Abrasion Resistance Test

When subjected to the falling sand test in accordance with ASTM D 968, Method A, the coating system shall withstand a minimum of 80 liters of sand before the appearance of the base metal. The term "appearance of base metal" refers to the metallic coating on steel or the aluminum base metal.

2.3.5.7 Specular Gloss

Finished roof surfaces shall have a specular gloss value of 30 at 60 degrees when measured in accordance with ASTM D 523.

2.3.5.8 Pollution Resistance

Coating shall show no visual effects when covered spot tested in a 10 percent hydrochloric acid solution for 24 hours in accordance with ASTM D 1308.

2.3.6 Accessories

Flashing, trim, metal closure strips and curbs, fascia, caps, diverters, and similar metal accessories shall be the manufacturer's standard products. Exposed metal accessories shall be finished to match the building finish. Molded closure strips shall be bituminous-saturated fiber, closed-cell or solid-cell synthetic rubber or neoprene, or polyvinyl chloride premolded to match configuration of the roofing or siding and shall not absorb or retain water.

2.4 WALL LINERS

Wall liners shall be 0.024 inch thick minimum for aluminum or 0.018 inch thick minimum for steel with the same composition specified for siding, and formed or patterned to prevent waviness and distortion, and shall extend

from floor to top of wall. Matching metal trim shall be provided at base of wall liner, at top of wall liner, around openings in walls and over interior and exterior corners. Wall liners shall have manufacturer's standard finishes. Colors shall be selected from manufacturer's standard finishes .

## 2.5 FASTENERS

Fasteners for standing seam metal roofs shall be concealed steel wall panels shall be zinc-coated steel, aluminum, corrosion resisting steel, or nylon capped steel, type and size specified below or as otherwise approved for the applicable requirements. Fasteners for aluminum wall panels shall be aluminum or corrosion resisting steel. Fasteners for attaching wall panels to supports shall provide both tensile and shear strength of not less than 750 lbs per fastener. Fasteners for accessories shall be the manufacturer's standard. Exposed wall fasteners shall be color finished or provided with plastic color caps to match the covering. Nonpenetrating fastener system for wall panels using concealed clips shall be manufacturer's standard for the system provided.

### 2.5.1 Screws

Screws shall be as recommended by the manufacturer to meet the design strength requirements.

### 2.5.2 End-Welded Studs

Automatic end-welded studs shall be shouldered type with a shank diameter of not less than 3/16 inch and cap or nut for holding covering against the shoulder.

### 2.5.3 Explosive Actuated Fasteners

Fasteners for use with explosive actuated tools shall have a shank of not less than 0.145 inch with a shank length of not less than 1/2 inch for fastening panels to steel and not less than 1 inch for fastening panels to concrete.

### 2.5.4 Blind Rivets

Blind rivets shall be aluminum with 3/16 inch nominal diameter shank or stainless steel with 1/8 inch nominal diameter shank. Rivets shall be threaded stem type if used for other than the fastening of trim. Rivets with hollow stems shall have closed ends.

### 2.5.5 Bolts

Bolts shall be not less than 1/4 inch diameter, shouldered or plain shank as required, with proper nuts.

## 2.6 GUTTERS AND DOWNSPOUTS

Gutters and downspouts shall be fabricated of aluminum, zinc-coated steel or aluminum-zinc alloy coated steel and shall have manufacturer's standard factory color finish. Minimum uncoated thickness of materials shall be 0.018 inch for steel and 0.032 inch for aluminum. All accessories necessary for the complete installation of the gutters and downspouts shall be furnished. Accessories shall include gutter straps, downspout elbows, downspout straps and fasteners fabricated from metal compatible with the

gutters and downspouts.

## 2.7 LOUVERS

Louvers shall be fabricated of aluminum, zinc-coated steel, or aluminum-zinc alloy coated steel; shall have manufacturer's standard factory color finish; and shall be furnished with bird screens. Minimum uncoated thickness of materials shall be 0.048 inch for steel and 0.064 inch for aluminum. Manually operated louvers shall be designed to be opened and closed from the operating floor.

## 2.8 DOORS

### 2.8.1 Hinged Doors

Hinged doors and frames shall receive a galvanic coating and factory primer and shall conform to the requirements of Section 08110 STEEL DOORS AND FRAMES. Exterior doors shall have top edges closed flush and sealed against water penetration. Hardware shall be as specified in Section 08710 DOOR HARDWARE.

## 2.9 INSULATION

Thermal resistance of insulation shall be not less than the R-values shown on the contract drawings. R-values shall be determined at a mean temperature of 75 degrees F in accordance with ASTM C 518. Insulation shall be a standard product with the insulation manufacturer, factory marked or identified with insulation manufacturer's name or trademark and R-value. Identification shall be on individual pieces or individual packages. Blanket insulation shall have a facing as specified in paragraph VAPOR RETARDER. Roof insulation , including facings, shall have a flame spread not in excess of 25 and a smoke developed rating not in excess of 50 when tested in accordance with ASTM E 84. The stated R-value of the insulation shall be certified by an independent Registered Professional Engineer if tests are conducted in the insulation manufacturer's laboratory. Contractor shall comply with EPA requirements in accordance with Section 01670 RECYCLED / RECOVERED MATERIALS.

### 2.9.1 Rigid Board Insulation

#### 2.9.1.1 Polyisocyanurate

Polyisocyanurate insulation shall conform to ASTM C 1289, Type I, Class 2 (having a minimum recovered material content of 9 percent by weight of core material in the polyisocyanurate portion). For impermeable faced polyisocyanurate (Ex: aluminum foil) the maximum design R-value per 1 inch of insulation used shall be 7.2 inch.

#### 2.9.1.2 Polystyrene

Insulation shall conform to ASTM C 578, Type IV.

#### 2.9.1.3 Mineral Fiber

Insulation shall conform to ASTM C 612.

#### 2.9.1.4 Blanket Insulation

Blanket insulation shall conform to ASTM C 991 .

2.9.1.5 Insulation Retainers

Retainers shall be type, size and design necessary to adequately hold the insulation and to provide a neat appearance. Metallic retaining members shall be nonferrous or have a nonferrous coating. Nonmetallic retaining members, including adhesives used in conjunction with mechanical retainers or at insulation seams, shall have a fire resistance classification not less than that permitted for the insulation.

2.10 SEALANT

Sealant shall be an elastomeric type containing no oil or asphalt. Exposed sealant shall be colored to match the applicable building color and shall cure to a rubber like consistency.

2.11 GASKETS AND INSULATING COMPOUNDS

Gaskets and insulating compounds shall be nonabsorptive and suitable for insulating contact points of incompatible materials. Insulating compounds shall be nonrunning after drying.

2.12 VAPOR RETARDER

2.12.1 Vapor Retarders as Integral Facing

Insulation facing shall have a permeability of 0.02 perm or less when tested in accordance with ASTM E 96. Facing shall be white reinforced polypropylene kraft laminate (PSK). Facings and finishes shall be factory applied.

2.12.2 Vapor Retarders Separate from Insulation

Vapor retarder material shall be polyethylene sheeting conforming to the requirements of ASTM D 4397. A single ply of 10 mil polyethylene sheet; or, at the option of the Contractor, a double ply of 6 mil polyethylene sheet shall be used. A fully compatible polyethylene tape shall be provided which has equal or better water vapor control characteristics than the vapor retarder material. A cloth industrial duct tape in a utility grade shall also be provided to use as needed to protect the vapor retarder from puncturing.

2.13 SHOP PRIMING

Ferrous surfaces shall be cleaned of oil, grease, loose rust, loose mill scale, and other foreign substances and shop primed. Primer coating shall be in accordance with the manufacturer's standard system.

PART 3 EXECUTION

3.1 ERECTION

Dissimilar materials which are not compatible when contacting each other shall be insulated from each other by means of gaskets or insulating compounds. Improper or mislocated drill holes in panels shall be plugged with an oversize screw fastener and gasketed washer; however, panels with an excess of such holes or with such holes in critical locations shall not be used. Exposed surfaces shall be kept clean and free from sealant, metal cuttings, excess material from thermal cutting, and other foreign

materials. Exposed surfaces which have been thermally cut shall be finished smooth within a tolerance of 1/8 inch. Stained, discolored or damaged sheets shall be removed from the site. Welding of steel shall conform to AWS D1.1/D1.1M; welding of aluminum shall conform to AA ADM.

### 3.1.1 Framing Members and Anchor Bolts

Erection shall be in accordance with the approved erection instructions and drawings and with applicable provision of AISC 335. Framing members fabricated or modified on site shall be saw or abrasive cut; bolt holes shall be drilled. Onsite flame cutting of framing members, with the exception of small access holes in structural beam or column webs, will not be permitted. High-strength bolting shall conform to AISC 348 using ASTM A 325 or ASTM A 490, ASTM A 490M bolts. Improper or mislocated bolt holes in structural members or other misfits caused by improper fabrication or erection, shall be repaired in accordance with AISC 303. Concrete work is specified in Section 03300 CAST-IN-PLACE STRUCTURAL CONCRETE. Anchor bolts shall be accurately set by template while the concrete is in a plastic state. Uniform bearing under base plates and sill members shall be provided using a nonshrinking grout. Separate leveling plates under column base plates shall not be used. Members shall be accurately spaced to assure proper fitting of panels. As erection progresses, the work shall be securely fastened to resist the dead load and wind and erection stresses. Supports for electric overhead traveling cranes shall be positioned and aligned in accordance with CMAA 70.

### 3.1.2 Roofing and Siding Installation

Siding shall be applied with the longitudinal configurations in the vertical position. Roofing shall be applied with the longitudinal configurations in the direction of the roof slope. Accessories shall be fastened into framing members, except as otherwise approved. Closure strips shall be provided as indicated and where necessary to provide weathertight construction. Fastener and fastener spacing shall be in accordance with manufacture design.

### 3.1.3 Installation of Gutters and Downspouts

Gutters and downspouts shall be rigidly attached to the building. Spacing of cleats for gutters shall be 16 inches maximum. Spacing of brackets and spacers for gutters shall be 36 inches maximum. Supports for downspouts shall be spaced according to manufacturer's recommendations.

### 3.1.4 Louvers

Louvers shall be rigidly attached to the supporting construction to assure a weather tight installation.

### 3.1.5 Doors

Doors, including frames and hardware, shall be securely anchored to the supporting construction, shall be installed plumb and true, and shall be adjusted as necessary to provide proper operation. Joints at doors and windows shall be sealed according to manufacturer's recommendations to provide weathertight construction.

### 3.1.6 Insulation Installation

Insulation shall be installed as indicated and in accordance with

manufacturer's instructions.

3.1.6.1 Board Insulation with Blanket Insulation

Rigid or semirigid board insulation shall be laid in close contact. If more than one layer of insulation is required, joints in the second layer shall be offset from joints in the first layer. A layer of blanket insulation shall be placed over the rigid or semirigid board insulation to be compressed against the underside of the metal roofing to reduce thermal bridging, dampen noise, and prevent roofing flutter. This layer of blanket insulation shall be compressed a minimum of 50 percent.

3.1.6.2 Blanket Insulation

Blanket insulation shall be installed over the purlins and held tight against the metal roofing. It shall be supported by an integral facing or other commercially available support system.

3.1.7 Vapor Retarder Installation

3.1.7.1 Integral Facing on Blanket Insulation

Integral facing on blanket insulation shall have the facing lapped and sealed with a compatible tape to provide a vapor tight membrane.

3.1.7.2 Polyethylene Vapor Retarder

The polyethylene vapor retarder membrane shall be installed over the entire surface. A fully compatible polyethylene tape shall be used to seal the edges of the sheets to provide a vapor tight membrane. Sheet edges shall be lapped not less than 6 inches. Sufficient material shall be provided to avoid inducing stresses in the sheets due to stretching or binding. All tears or punctures that are visible in the finished surface at any time during the construction process shall be sealed with polyethylene tape.

3.1.8 Wall Liner

Wall liner shall be securely fastened into place in accordance with the manufacturer's recommendation and in a manner to present a neat appearance.

3.2 SPECIAL INSPECTION AND TESTING FOR SEISMIC-RESISTING SYSTEMS

Special inspections and testing for seismic-resisting systems and components shall be done in accordance with Section 01452A SPECIAL INSPECTION FOR SEISMIC-RESISTING SYSTEMS.

3.3 FIELD PAINTING

Immediately upon detection, abraded or corroded spots on shop-painted surfaces shall be wire brushed and touched up with the same material used for the shop coat. Shop-primed ferrous surfaces exposed on the outside of the building and all shop-primed surfaces of doors and windows shall be painted with two coats of an approved exterior enamel. Factory color finished surfaces shall be touched up as necessary with the manufacturer's recommended touch-up paint.

CONTRACTOR'S FIVE (5) YEAR NO PENAL SUM WARRANTY
FOR
METAL BUILDING SYSTEM

FACILITY
DESCRIPTION:_____

BUILDING
NUMBER:_____

CORPS OF ENGINEERS CONTRACT
NUMBER:_____

CONTRACTOR

CONTRACTOR:_____
ADDRESS:_____

POINT OF
CONTACT:_____

TELEPHONE
NUMBER:_____

OWNER

OWNER:_____

ADDRESS:_____

POINT OF
CONTACT:_____

TELEPHONE
NUMBER:_____

CONSTRUCTION AGENT

CONSTRUCTION
AGENT:_____
ADDRESS:_____

POINT OF CONTACT:_____

TELEPHONE
NUMBER:_____

CONTRACTOR'S FIVE (5) YEAR NO PENAL SUM WARRANTY
FOR
METAL BUILDING SYSTEM
(continued)

THE METAL BUILDING SYSTEM INSTALLED ON THE ABOVE NAMED BUILDING IS WARRANTED BY _____ FOR A PERIOD OF FIVE (5) YEARS AGAINST WORKMANSHIP AND MATERIAL DEFICIENCIES, WIND DAMAGE AND STRUCTURAL FAILURE WITHIN PROJECT SPECIFIED DESIGN LOADS, AND LEAKAGE. THE METAL BUILDING SYSTEM COVERED UNDER THIS WARRANTY SHALL INCLUDE, BUT SHALL NOT BE LIMITED TO, THE FOLLOWING: FRAMING AND STRUCTURAL MEMBERS, ROOFING AND SIDING PANELS AND SEAMS, INTERIOR OR EXTERIOR GUTTERS AND DOWNSPOUTS, ACCESSORIES, TRIM, FLASHINGS AND MISCELLANEOUS BUILDING CLOSURE ITEMS SUCH AS DOORS AND WINDOWS (WHEN FURNISHED BY THE MANUFACTURER), CONNECTORS, COMPONENTS, AND FASTENERS, AND OTHER SYSTEM COMPONENTS AND ASSEMBLIES INSTALLED TO PROVIDE A WEATHERTIGHT SYSTEM; AND ITEMS SPECIFIED IN OTHER SECTIONS OF THESE SPECIFICATIONS THAT BECOME PART OF THE METAL BUILDING SYSTEM. ALL MATERIAL AND WORKMANSHIP DEFICIENCIES, SYSTEM DETERIORATION CAUSED BY EXPOSURE TO THE ELEMENTS AND/OR INADEQUATE RESISTANCE TO SPECIFIED SERVICE DESIGN LOADS, WATER LEAKS AND WIND UPLIFT DAMAGE SHALL BE REPAIRED AS APPROVED BY THE CONTRACTING OFFICER

ALL MATERIAL DEFICIENCIES, WIND DAMAGE, STRUCTURAL FAILURE AND LEAKAGE ASSOCIATED WITH THE METAL BUILDING SYSTEM COVERED UNDER THIS WARRANTY SHALL BE REPAIRED AS APPROVED BY THE CONTRACTING OFFICER. THIS WARRANTY SHALL COVER THE ENTIRE COST OF REPAIR OR REPLACEMENT, INCLUDING ALL MATERIAL, LABOR, AND RELATED MARKUPS. THE ABOVE REFERENCED WARRANTY COMMENCED ON THE DATE OF FINAL ACCEPTANCE ON _____ AND WILL REMAIN IN EFFECT FOR STATED DURATION FROM THIS DATE.

SIGNED, DATED, AND NOTARIZED (BY COMPANY PRESIDENT)

_____

(Company President) (Date)

CONTRACTOR'S FIVE (5) YEAR NO PENAL SUM WARRANTY
FOR
METAL BUILDING SYSTEM
(continued)

THE CONTRACTOR SHALL SUPPLEMENT THIS WARRANTY WITH WRITTEN WARRANTIES FROM THE MANUFACTURER AND/OR INSTALLER OF THE METAL BUILDING SYSTEM, WHICH SHALL BE SUBMITTED ALONG WITH THE CONTRACTOR'S WARRANTY. HOWEVER, THE CONTRACTOR WILL BE ULTIMATELY RESPONSIBLE FOR THIS WARRANTY AS OUTLINED IN THE SPECIFICATIONS AND AS INDICATED IN THIS WARRANTY.

EXCLUSIONS FROM COVERAGE

1. NATURAL DISASTERS, ACTS OF GOD (LIGHTNING, FIRE, EXPLOSIONS, SUSTAINED WIND FORCES IN EXCESS OF THE DESIGN CRITERIA, EARTHQUAKES, AND HAIL).

2. ACTS OF NEGLIGENCE OR ABUSE OR MISUSE BY GOVERNMENT OR OTHER PERSONNEL, INCLUDING ACCIDENTS, VANDALISM, CIVIL DISOBEDIENCE, WAR, OR DAMAGE CAUSED BY FALLING OBJECTS.

3. DAMAGE BY STRUCTURAL FAILURE, SETTLEMENT, MOVEMENT, DISTORTION, WARPAGE, OR DISPLACEMENT OF THE BUILDING STRUCTURE OR ALTERATIONS MADE TO THE BUILDING.

4. CORROSION CAUSED BY EXPOSURE TO CORROSIVE CHEMICALS, ASH OR FUMES GENERATED OR RELEASED INSIDE OR OUTSIDE THE BUILDING FROM CHEMICAL PLANTS, FOUNDRIES, PLATING WORKS, KILNS, FERTILIZER FACTORIES, PAPER PLANTS, AND THE LIKE.

5. FAILURE OF ANY PART OF THE BUILDING SYSTEM DUE TO ACTIONS BY THE OWNER WHICH INHIBIT FREE DRAINAGE FROM THE ROOF, AND GUTTERS AND DOWNSPOUTS; OR CONDITIONS WHICH CREATE PONDING WATER ON THE ROOF OR AGAINST THE BUILDING SIDING.

6. THIS WARRANTY APPLIES TO THE METAL BUILDING SYSTEM. IT DOES NOT INCLUDE ANY CONSEQUENTIAL DAMAGE TO THE BUILDING INTERIOR OR CONTENTS WHICH IS COVERED BY THE WARRANTY OF CONSTRUCTION CLAUSE INCLUDED IN THIS CONTRACT.

7. THIS WARRANTY CANNOT BE TRANSFERRED TO ANOTHER OWNER WITHOUT WRITTEN CONSENT OF THE CONTRACTOR AND THIS WARRANTY AND THE CONTRACT PROVISIONS WILL TAKE PRECEDENCE OVER ANY CONFLICTS WITH STATE STATUTES. REPORTS OF LEAKS AND BUILDING SYSTEM DEFICIENCIES SHALL BE RESPONDED TO WITHIN 48 HOURS OF RECEIPT OF NOTICE BY TELEPHONE OR IN WRITING FROM EITHER THE OWNER, OR CONTRACTING OFFICER. EMERGENCY REPAIRS, TO PREVENT FURTHER ROOF LEAKS, SHALL BE INITIATED IMMEDIATELY; A WRITTEN PLAN SHALL BE SUBMITTED FOR APPROVAL TO REPAIR OR REPLACE THIS SSSMR SYSTEM WITHIN SEVEN CALENDAR DAYS. ACTUAL WORK FOR PERMANENT REPAIRS OR REPLACEMENT SHALL BE STARTED WITHIN 30 DAYS AFTER RECEIPT OF NOTICE, AND COMPLETED WITHIN A REASONABLE TIME FRAME. IF THE CONTRACTOR FAILS TO ADEQUATELY RESPOND TO THE WARRANTY PROVISIONS, AS STATED

CONTRACTOR'S FIVE (5) YEAR NO PENAL SUM WARRANTY
FOR
METAL BUILDING SYSTEM
(Exclusions from Coverage Continued)

IN THE CONTRACT AND AS CONTAINED HEREIN, THE CONTRACTING OFFICER MAY HAVE THE METAL BUILDING SYSTEM REPLACED OR REPAIRED BY OTHERS AND CHARGE THE COST TO THE CONTRACTOR. IN THE EVENT THE CONTRACTOR DISPUTES THE EXISTENCE OF A WARRANTABLE DEFECT, THE CONTRACTOR MAY CHALLENGE THE OWNER'S DEMAND FOR REPAIRS AND/OR REPLACEMENT DIRECTED BY THE OWNER OR CONTRACTING OFFICER EITHER BY REQUESTING A CONTRACTING OFFICER'S DECISION, UNDER THE CONTRACT DISPUTES ACT, OR BY REQUESTING THAT AN ARBITRATOR RESOLVE THE ISSUE. THE REQUEST FOR AN ARBITRATOR MUST BE MADE WITHIN 48 HOURS OF BEING NOTIFIED OF THE DISPUTED DEFECTS. UPON BEING INVOKED THE PARTIES SHALL, WITHIN 10 DAYS JOINTLY REQUEST A LIST OF FIVE (5) ARBITRATORS FROM THE FEDERAL MEDIATION AND CONCILIATION SERVICE. THE PARTIES SHALL CONFER WITHIN 10 DAYS AFTER RECEIPT OF THE LIST TO SEEK AGREEMENT ON AN ARBITRATOR. IF THE PARTIES CANNOT AGREE ON AN ARBITRATOR, THE CONTRACTING OFFICER AND THE PRESIDENT OF THE CONTRACTOR'S COMPANY WILL STRIKE ONE (1) NAME FROM THE LIST ALTERNATIVELY UNTIL ONE NAME REMAINS. THE REMAINING PERSON SHALL BE THE DULY SELECTED ARBITRATOR. THE COSTS OF THE ARBITRATION, INCLUDING THE ARBITRATOR'S FEE AND EXPENSES, COURT REPORTER, COURTROOM OR SITE SELECTED ETC., SHALL BE BORNE EQUALLY BETWEEN THE PARTIES. EITHER PARTY DESIRING A COPY OF THE TRANSCRIPT SHALL PAY FOR THE TRANSCRIPT. A HEARING WILL BE HELD AS SOON AS THE PARTIES CAN MUTUALLY AGREE. A WRITTEN ARBITRATOR'S DECISION WILL BE REQUESTED NOT LATER THAN 30 DAYS FOLLOWING THE HEARING. THE DECISION OF THE ARBITRATOR WILL NOT BE BINDING; HOWEVER, IT WILL BE ADMISSIBLE IN ANY SUBSEQUENT APPEAL UNDER THE CONTRACT DISPUTES ACT. A FRAMED COPY OF THIS WARRANTY SHALL BE POSTED IN THE MECHANICAL ROOM OR OTHER APPROVED LOCATION DURING THE ENTIRE WARRANTY PERIOD.

-- End of Section --

SECTION TABLE OF CONTENTS

DIVISION 13 - SPECIAL CONSTRUCTION

SECTION 13280A

ASBESTOS ABATEMENT

**11/01**

PART 1 GENERAL

1.1 REFERENCES
1.2 DEFINITIONS
1.3 DESCRIPTION OF WORK
1.3.1 Abatement Work Tasks
1.3.2 Unexpected Discovery of Asbestos
1.4 SUBMITTALS
1.5 QUALIFICATIONS
1.5.1 Written Qualifications and Organization Report
1.5.2 Specific Requirements
1.6 REGULATORY REQUIREMENTS
1.7 SAFETY AND HEALTH PROGRAM AND PLANS
1.7.1 Asbestos Hazard Abatement Plan Appendix
1.7.2 Activity Hazard Analyses Appendix
1.8 PRECONSTRUCTION CONFERENCE AND ONSITE SAFETY
1.9 SECURITY
1.10 MEDICAL REQUIREMENTS
1.10.1 Medical Examinations
1.10.1.1 Information Provided to the Physician
1.10.1.2 Written Medical Opinion
1.10.2 Medical and Exposure Records
1.11 TRAINING PROGRAM
1.11.1 General Training Requirements
1.11.2 Project Specific Training
1.12 RESPIRATORY PROTECTION PROGRAM
1.12.1 Respiratory Fit Testing
1.12.2 Respirator Selection and Use Requirements
1.12.3 Class I Work
1.12.4 Class II and III Work
1.12.5 Sanitation
1.13 HAZARD COMMUNICATION PROGRAM
1.14 LICENSES, PERMITS AND NOTIFICATIONS
1.14.1 General Legal Requirements
1.14.2 Litigation and Notification
1.15 PERSONAL PROTECTIVE EQUIPMENT
1.15.1 Respirators
1.15.2 Whole Body Protection
1.15.2.1 Coveralls
1.15.2.2 NOT USED
1.15.2.3 Work Clothing
1.15.2.4 Gloves
1.15.2.5 Foot Coverings
1.15.2.6 Head Covering
1.15.2.7 Protective Eye Wear
1.16 HYGIENE FACILITIES AND PRACTICES

1.16.1 Shower Facilities
1.16.2 3-Stage Decontamination Area
1.16.3 Load-Out Unit
1.16.4 Single Stage Decontamination Area
1.16.5 NOT USED
1.16.6 Decontamination Area Entry Procedures
1.16.7 Decontamination Area Exit Procedures
1.16.8 Lunch Areas
1.16.9 Smoking
1.17 REGULATED AREAS
1.18 WARNING SIGNS AND TAPE
1.19 WARNING LABELS
1.20 Local Exhaust Ventilation
1.21 TOOLS
1.22 RENTAL EQUIPMENT
1.23 AIR MONITORING EQUIPMENT
1.24 EXPENDABLE SUPPLIES
1.24.1 Glovebag
1.24.2 Duct Tape
1.24.3 Disposal Containers
1.24.4 Disposal Bags
1.24.5 NOT USED
1.24.6 Cardboard Boxes
1.24.7 Sheet Plastic
1.24.8 Amended Water
1.24.9 Mastic Removing Solvent
1.24.10 Leak-tight Wrapping
1.25 MISCELLANEOUS ITEMS

PART 2 PRODUCTS

2.1 NOT USED
2.2 NOT USED
2.3 RECYCLABLE MATERIALS

PART 3 EXECUTION

3.1 GENERAL REQUIREMENTS
3.2 PROTECTION OF ADJACENT WORK OR AREAS TO REMAIN
3.3 OBJECTS
3.3.1 Removal of Mobile Objects
3.3.2 NOT USED
3.4 BUILDING VENTILATION SYSTEM AND CRITICAL BARRIERS
3.5 PRECLEANING
3.6 METHODS OF COMPLIANCE
3.6.1 Mandated Practices
3.6.2 Control Methods
3.6.3 Unacceptable Practices
3.6.4 Class I Work Procedures
3.6.5 Specific Control Methods for Class I Work
3.6.5.1 NOT USED
3.6.5.2 Glovebag Systems
3.6.5.3 Mini-Enclosures
3.6.5.4 Wrap and Cut Operation
3.6.6 NOT USED
3.6.7 NOT USED
3.6.8 NOT USED
3.6.9 NOT USED
3.6.10 Alternative Methods for Asphaltic Wrap

3.6.11 Cleaning After Asbestos Removal
3.6.12 Class I Asbestos Work Response Action Detail Sheets
3.6.13 Class II Asbestos Work Response Action Detail Sheets
3.7 FINAL CLEANING AND VISUAL INSPECTION
3.8 NOT USED
3.9 EXPOSURE ASSESSMENT AND AIR MONITORING
3.9.1 General Requirements For Exposure
3.9.2 Initial Exposure Assessment
3.9.3 Negative Exposure Assessment
3.9.4 NOT USED
3.9.5 Preabatement Environmental Air Monitoring
3.9.6 Environmental Air Monitoring During Abatement
3.9.7 Final Clearance Air Monitoring
3.9.7.1 Final Clearance Requirements, NIOSH PCM Method
3.9.7.2 NOT USED
3.9.7.3 Air Clearance Failure
3.9.8 Air-Monitoring Results and Documentation
3.10 CLEARANCE CERTIFICATION
3.11 CLEANUP AND DISPOSAL
3.11.1 Title to ACM Materials
3.11.2 Collection and Disposal of Asbestos
3.11.3 NOT USED
3.11.4 Weigh Bill and Delivery Tickets
3.11.5 Asbestos Waste Shipment Record

-- End of Section Table of Contents --

SECTION 13280A

ASBESTOS ABATEMENT
**11/01**

PART 1 GENERAL

Attachments:

Set-Up Detail and Response Action Detail Sheets: 1, 9A, 9B, 9C, 10, 11, 12, 13, 14, 15, 19, 22, 23, 45, 86, 87, 88, 89, 94, 101 and 104

1.1 REFERENCES

The publications listed below form a part of this specification to the extent referenced. The publications are referred to in the text by basic designation only.

AMERICAN NATIONAL STANDARDS INSTITUTE (ANSI)

| | |
|---|---|
| ANSI Z87.1 | (1989; Errata; Z87.1a) Occupational and Educational Eye and Face Protection |
| ANSI Z88.2 | (1992) Respiratory Protection |
| ANSI Z9.2 | (1979; R 1991) Fundamentals Governing the Design and Operation of Local Exhaust Systems |

ASTM INTERNATIONAL (ASTM)

| | |
|---|---|
| ASTM D 1331 | (1989; R 1995) Surface and Interfacial Tension of Solutions of Surface-Active Agents |
| ASTM D 4397 | (1996) Polyethylene Sheeting for Construction, Industrial, and Agricultural Applications |
| ASTM E 1368 | (2000) Visual Inspection of Asbestos Abatement Projects |

COMPRESSED GAS ASSOCIATION (CGA)

| | |
|---|---|
| CGA G-7 | (1990) Compressed Air for Human Respiration |
| CGA G-7.1 | (1997) Commodity Specification for Air |

NATIONAL INSTITUTE FOR OCCUPATIONAL SAFETY AND HEALTH (NIOSH)

| | |
|---|---|
| NIOSH Pub No. 84-100 | (1984; Supple 1985, 1987, 1988 & 1990) NIOSH Manual of Analytical Methods |

U.S. ARMY CORPS OF ENGINEERS (USACE)

| | |
|---|---|
| EM 385-1-1 | (2003 or most recent) U.S. Army Corps of |

| | |
|---|---|
| | Engineers Safety and Health Requirements Manual |

U.S. ENVIRONMENTAL PROTECTION AGENCY (EPA)

| | |
|---|---|
| EPA 340/1-90/018 | (1990) Asbestos/NESHAP Regulated Asbestos Containing Materials Guidance |
| EPA 340/1-90/019 | (1990) Asbestos/NESHAP Adequately Wet Guidance |
| EPA 560/5-85-024 | (1985) Guidance for Controlling Asbestos-Containing Materials in Buildings |

U.S. NATIONAL ARCHIVES AND RECORDS ADMINISTRATION (NARA)

| | |
|---|---|
| 29 CFR 1910 | Occupational Safety and Health Standards |
| 29 CFR 1926 | Safety and Health Regulations for Construction |
| 40 CFR 61 | National Emission Standards for Hazardous Air Pollutants |
| 40 CFR 763 | Asbestos |
| 42 CFR 84 | Approval of Respiratory Protective Devices |
| 49 CFR 107 | Hazardous Materials Program Procedures |
| 49 CFR 171 | General Information, Regulations, and Definitions |
| 49 CFR 172 | Hazardous Materials Table, Special Provisions, Hazardous Materials Communications, Emergency Response Information, and Training Requirements |
| 49 CFR 173 | Shippers - General Requirements for Shipments and Packagings |

UNDERWRITERS LABORATORIES (UL)

| | |
|---|---|
| UL 586 | (1996; Rev thru Aug 1999) High-Efficiency, Particulate, Air Filter Units |

## 1.2 DEFINITIONS

a. Adequately Wet: A term defined in 40 CFR 61, Subpart M, and EPA 340/1-90/019 meaning to sufficiently mix or penetrate with liquid to prevent the release of particulate. If visible emissions are observed coming from asbestos-containing material (ACM), then that material has not been adequately wetted. However, the absence of visible emissions is not sufficient evidence of being adequately wetted.

b. Aggressive Method: Removal or disturbance of building material by sanding, abrading, grinding, or other method that breaks, crumbles, or disintegrates intact asbestos-containing material (ACM).

c. Amended Water: Water containing a wetting agent or surfactant with a surface tension of at least 29 dynes per square centimeter when tested in accordance with ASTM D 1331.

d. Asbestos: Asbestos includes chrysotile, amosite, crocidolite, tremolite asbestos, anthophylite asbestos, actinolite asbestos, and any of these minerals that have been chemically treated and/or altered.

e. Asbestos-Containing Material (ACM): Any materials containing more than one percent asbestos.

f. Asbestos Fiber: A particulate form of asbestos, 5 micrometers or longer, with a length-to-width ratio of at least 3 to 1.

g. Authorized Person: Any person authorized by the Contractor and required by work duties to be present in the regulated areas.

h. Building Inspector: Individual who inspects buildings for asbestos and has EPA Model Accreditation Plan (MAP) "Building Inspector" training; accreditation required by 40 CFR 763, Subpart E, Appendix C.

i. Certified Industrial Hygienist (CIH): An Industrial Hygienist certified in the practice of industrial hygiene by the American Board of Industrial Hygiene.

j. Class I Asbestos Work: Activities defined by OSHA involving the removal of thermal system insulation (TSI) and surfacing ACM.

k. Class II Asbestos Work: Activities defined by OSHA involving the removal of ACM which is not thermal system insulation or surfacing material. This includes, but is not limited to, the removal of asbestos - containing wallboard, floor tile and sheeting, roofing and siding shingles, and construction mastic. Certain "incidental" roofing materials such as mastic, flashing and cements when they are still intact are excluded from Class II asbestos work. Removal of small amounts of these materials which would fit into a glovebag may be classified as a Class III job.

l. Class III Asbestos Work: Activities defined by OSHA that involve repair and maintenance operations, where ACM, including TSI and surfacing ACM, is likely to be disturbed. Operations may include drilling, abrading, cutting a hole, cable pulling, crawling through tunnels or attics and spaces above the ceiling, where asbestos is actively disturbed or asbestos-containing debris is actively disturbed.

m. Class IV Asbestos Work: Maintenance and custodial construction activities during which employees contact but do not disturb ACM and activities to clean-up dust, waste and debris resulting from Class I, II, and III activities. This may include dusting surfaces where ACM waste and debris and accompanying dust exists and cleaning up loose ACM debris from TSI or surfacing ACM

following construction.

n. Clean room: An uncontaminated room having facilities for the storage of employees' street clothing and uncontaminated materials and equipment.

o. Competent Person: In addition to the definition in 29 CFR 1926, Section .32(f), a person who is capable of identifying existing asbestos hazards as defined in 29 CFR 1926, Section .1101, selecting the appropriate control strategy, has the authority to take prompt corrective measures to eliminate them and has EPA Model Accreditation Plan (MAP) "Contractor/Supervisor" training; accreditation required by 40 CFR 763, Subpart E, Appendix C.

p. Contractor/Supervisor: Individual who supervises asbestos abatement work and has EPA Model Accreditation Plan "Contractor/Supervisor" training; accreditation required by 40 CFR 763, Subpart E, Appendix C.

q. Critical Barrier: One or more layers of plastic sealed over all openings into a regulated area or any other similarly placed physical barrier sufficient to prevent airborne asbestos in a regulated area from migrating to an adjacent area.

r. Decontamination Area: An enclosed area adjacent and connected to the regulated area and consisting of an equipment room, shower area, and clean room, which is used for the decontamination of workers, materials, and equipment that are contaminated with asbestos.

s. Demolition: The wrecking or taking out of any load-supporting structural member and any related razing, removing, or stripping of asbestos products.

t. Disposal Bag: A 6 mil thick, leak-tight plastic bag, pre-labeled in accordance with 29 CFR 1926, Section .1101, used for transporting asbestos waste from containment to disposal site.

u. Disturbance: Activities that disrupt the matrix of ACM, crumble or pulverize ACM, or generate visible debris from ACM. Disturbance includes cutting away small amounts of ACM, no greater than the amount which can be contained in 1 standard sized glovebag or waste bag, not larger than 60 inches in length and width in order to access a building component.

v. Equipment Room or Area: An area adjacent to the regulated area used for the decontamination of employees and their equipment.

w. Employee Exposure: That exposure to airborne asbestos that would occur if the employee were not using respiratory protective equipment.

x. Fiber: A fibrous particulate, 5 micrometers or longer, with a length to width ratio of at least 3 to 1.

y. Friable ACM: A term defined in 40 CFR 61, Subpart M and EPA 340/1-90/018 meaning any material which contains more than 1 percent asbestos, as determined using the method specified in 40 CFR 763, Subpart E, Appendix A, Section 1, Polarized Light

Microscopy (PLM), that when dry, can be crumbled, pulverized, or reduced to powder by hand pressure. If the asbestos content is less than 10 percent, as determined by a method other than point counting by PLM, the asbestos content is verified by point counting using PLM.

z. Glovebag: Not more than a 60 by 60 inch impervious plastic bag-like enclosure affixed around an asbestos-containing material, with glove-like appendages through which material and tools may be handled.

aa. High-Efficiency Particulate Air (HEPA) Filter: A filter capable of trapping and retaining at least 99.97 percent of all mono-dispersed particles of 0.3 micrometers in diameter.

bb. Homogeneous Area: An area of surfacing material or thermal system insulation that is uniform in color and texture.

cc. Industrial Hygienist: A professional qualified by education, training, and experience to anticipate, recognize, evaluate, and develop controls for occupational health hazards.

dd. Intact: ACM which has not crumbled, been pulverized, or otherwise deteriorated so that the asbestos is no longer likely to be bound with its matrix. Removal of "intact" asphaltic, resinous, cementitious products does not render the ACM non-intact simply by being separated into smaller pieces.

ee. Model Accreditation Plan (MAP): USEPA training accreditation requirements for persons who work with asbestos as specified in 40 CFR 763, Subpart E, Appendix C.

ff. Modification: A changed or altered procedure, material or component of a control system, which replaces a procedure, material or component of a required system.

gg. Negative Exposure Assessment: A demonstration by the Contractor to show that employee exposure during an operation is expected to be consistently below the OSHA Permissible Exposure Limits (PELs).

hh. NESHAP: National Emission Standards for Hazardous Air Pollutants. The USEPA NESHAP regulation for asbestos is at 40 CFR 61, Subpart M.

ii. Nonfriable ACM: A NESHAP term defined in 40 CFR 61, Subpart M and EPA 340/1-90/018 meaning any material containing more than 1 percent asbestos, as determined using the method specified in 40 CFR 763, Subpart E, Appendix A, Section 1, Polarized Light Microscopy, that, when dry, cannot be crumbled, pulverized or reduced to powder by hand pressure.

jj. Nonfriable ACM (Category I): A NESHAP term defined in 40 CFR 61, Subpart E and EPA 340/1-90/018 meaning asbestos-containing packings, gaskets, resilient floor covering, and asphalt roofing products containing more than 1 percent asbestos as determined using the method specified in 40 CFR 763, Subpart F, Appendix A, Section 1, Polarized Light Microscopy.

kk. Nonfriable ACM (Category II): A NESHAP term defined in 40 CFR 61,

Subpart E and EPA 340/1-90/018 meaning any material, excluding Category I nonfriable ACM, containing more than 1 percent asbestos, as determined using the methods specified in 40 CFR 763, Subpart F, Appendix A, Section 1, Polarized Light Microscopy, that when dry, cannot be crumbled, pulverized, or reduced to powder by hand pressure.

ll. Permissible Exposure Limits (PELs):

(1) PEL-Time weighted average(TWA): Concentration of asbestos not in excess of 0.1 fibers per cubic centimeter of air (f/cc) as an 8 hour time weighted average (TWA), as determined by the method prescribed in 29 CFR 1926, Section .1101, Appendix A, or the current version of NIOSH Pub No. 84-100 analytical method 7400.

(2) PEL-Excursion Limit: An airborne concentration of asbestos not in excess of 1.0 f/cc of air as averaged over a sampling period of 30 minutes as determined by the method prescribed in 29 CFR 1926, Section .1101, Appendix A, or the current version of NIOSH Pub No. 84-100 analytical method 7400.

mm. Regulated Area: An OSHA term defined in 29 CFR 1926, Section .1101 meaning an area established by the Contractor to demarcate areas where Class I, II, and III asbestos work is conducted; also any adjoining area where debris and waste from such asbestos work accumulate; and an area within which airborne concentrations of asbestos exceed, or there is a reasonable possibility they may exceed, the permissible exposure limit.

nn. Removal: All operations where ACM is taken out or stripped from structures or substrates, and includes demolition operations.

oo. Repair: Overhauling, rebuilding, reconstructing, or reconditioning of structures or substrates, including encapsulation or other repair of ACM attached to structures or substrates. If the amount of asbestos so "disturbed" cannot be contained in 1 standard glovebag or waste bag, Class I precautions are required.

pp. Spills/Emergency Cleanups: Cleanup of sizable amounts of asbestos waste and debris which has occurred, for example, when water damage occurs in a building, and sizable amounts of ACM are dislodged. A Competent Person evaluates the site and ACM to be handled, and based on the type, condition and extent of the dislodged material, classifies the cleanup as Class I, II, or III. Only if the material was intact and the cleanup involves mere contact of ACM, rather than disturbance, could there be a Class IV classification.

qq. Surfacing ACM: Asbestos-containing material which contains more than 1% asbestos and is sprayed-on, troweled-on, or otherwise applied to surfaces, such as acoustical plaster on ceilings and fireproofing materials on structural members, or other materials on surfaces for acoustical, fireproofing, or other purposes.

rr. Thermal system insulation (TSI) ACM: ACM which contains more than 1% asbestos and is applied to pipes, fittings, boilers, breeching, tanks, ducts, or other interior structural components to prevent heat loss or gain or water condensation.

ss. Transite: A generic name for asbestos cement wallboard and pipe.

tt. Worker: Individual (not designated as the Competent Person or a supervisor) who performs asbestos work and has completed asbestos worker training required by 29 CFR 1926, Section .1101, to include EPA Model Accreditation Plan (MAP) "Worker" training; accreditation required by 40 CFR 763, Subpart E, Appendix C, if required by the OSHA Class of work to be performed or by the state where the work is to be performed.

## 1.3 DESCRIPTION OF WORK

The work covered by this section includes the removal of asbestos-containing materials (ACM) which could be encountered during demolition activities associated with Bldg 707 and the Pumphouse describes procedures and equipment required to protect workers and occupants of the regulated area from contact with airborne asbestos fibers and ACM dust and debris. Activities could include OSHA Class I and Class II work operations involving ACM. The work also includes containment, storage, transportation and disposal of the generated ACM wastes. More specific operational procedures shall be detailed in the required Accident Prevention Plan and its subcomponents, the Asbestos Hazard Abatement Plan and Activity Hazard Analyses required in paragraph SAFETY AND HEALTH PROGRAM AND PLANS.

### 1.3.1 Abatement Work Tasks

The specific ACM to be abated could include pipe insulation and gaskets located in the Pumphouseand roofing material of Pumphouse and Bldg 707 as well as any pipeline asphaltic wrap.

### 1.3.2 Unexpected Discovery of Asbestos

For any previously untested building components suspected to contain asbestos and located in areas impacted by the work, the Contractor shall notify the Contracting Officer (CO) who will have the option of ordering up to six (6) bulk samples to be obtained at the Contractor's expense and delivered to a laboratory accredited under the National Institute of Standards and Technology (NIST) "National Voluntary Laboratory Accreditation Program (NVLAP)" and analyzed by PLM at no additional cost to the Government. Any additional components identified as ACM that have been approved by the Contracting Officer for removal shall be removed by the Contractor and will be paid for by an equitable adjustment to the contract price under the CONTRACT CLAUSE titled "changes". Sampling activities undertaken to determine the presence of additional ACM shall be conducted by personnel who have successfully completed the EPA Model Accreditation Plan (MAP) "Building Inspector" training course required by 40 CFR 763, Subpart E, Appendix C.

## 1.4 SUBMITTALS

Government approval is required for submittals with a "G" designation; submittals not having a "G" designation are for information only. When used, a designation following the "G" designation identifies the office that will review the submittal for the Government. The following shall be submitted in accordance with Section 01330 SUBMITTAL PROCEDURES:

SD-03 Product Data

Respiratory Protection Program; G-RE

Records of the respirator program.

Cleanup and Disposal; G-RE

Waste shipment records. Weigh bills and delivery tickets shall be furnished for information only.

Detailed Drawings; G-RE

Descriptions, detail project drawings, and site layout to include worksite containment area techniques as prescribed on applicable SET-UP DETAIL SHEETS, local exhaust ventilation system locations, decontamination units and load-out units, other temporary waste storage facility, access tunnels, location of temporary utilities (electrical, water, sewer) and boundaries of each regulated area.

Materials and Equipment; G-RE

Manufacturer's catalog data for all materials and equipment to be used in the work, including brand name, model, capacity, performance characteristics and any other pertinent information. Test results and certificates from the manufacturer of encapsulants substantiating compliance with performance requirements of this specification. Material Safety Data Sheets for all chemicals to be used onsite in the same format as implemented in the Contractor's HAZARD COMMUNICATION PROGRAM. Data shall include, but shall not be limited to, the following items:

a. High Efficiency Filtered Air (HEPA) local exhaust equipment

b. Vacuum cleaning equipment

c. Air monitoring equipment

d. Respirators

e. Personal protective clothing and equipment

f. Duct Tape

g. Disposal Containers

h. Sheet Plastic

i. Wetting Agent

i. Prefabricated Decontamination Unit

j. Other items

k. Material Safety Data Sheets (for all chemicals proposed)

Accident Prevention Plan; G-RE

The site-specific written plan to be implemented by the

Contractor, including the Asbestos Hazard Abatement Plan. See SECTION 01110 SPECIAL CONDITIONS.

Qualifications; G-RE

A written report providing evidence of qualifications for personnel, facilities and equipment assigned to the work.

Training Program;

A copy of the written project site-specific training material as indicated in 29 CFR 1926, Section .1101 that will be used to train onsite employees. The training document shall be signed by the Contractor's Designated IH and Competent Person.

Medical Requirements;

Physician's written opinion.

Encapsulants;

Certificates stating that encapsulants meet the applicable specified performance requirements.

SD-06 Test Reports

Exposure Assessment and Air Monitoring; G-RE

Initial exposure assessments, negative exposure assessments, air-monitoring results and documentation.

Licenses, Permits and Notifications; G-RE

Licenses, permits, and notifications.

SD-07 Certificates

Vacuum, Filtration and Ventilation Equipment;

Manufacturer's certifications showing compliance with ANSI Z9.2 for:

a. Vacuums.

b. Water filtration equipment.

c. Ventilation equipment.

d. Other equipment required to contain airborne asbestos fibers.

## 1.5 QUALIFICATIONS

### 1.5.1 Written Qualifications and Organization Report

The Contractor shall furnish a written qualifications and organization report providing evidence of qualifications of the Contractor, Contractor's Project Supervisor, Designated Competent Person, supervisors and workers; Designated IH (person assigned to project and firm name); independent testing laboratory (including name of firm that will perform analyses); all

subcontractors to be used including disposal transportation and disposal facility firms; and any others assigned to perform asbestos abatement and support activities. The report shall include an organization chart showing the Contractor's staff organization for this project by name and title, chain of command and reporting relationship with all subcontractors. The report shall be signed by the Contractor, the Contractor's onsite project manager, Designated Competent Person, Designated IH, designated testing laboratory and the principals of all subcontractors to be used. The Contractor shall include the following statement in the report: "By signing this report I certify that the personnel I am responsible for during the course of this project fully understand the contents of 29 CFR 1926, Section .1101, 40 CFR 61, Subpart M, and the federal, state and local requirements specified in paragraph SAFETY AND HEALTH PROGRAM AND PLANS for those asbestos abatement activities that they will be involved in."

1.5.2 Specific Requirements

The Contractor shall designate in writing, personnel meeting the following qualifications:

a. Designated Competent Person: The name, address, telephone number, and resume of the Contractor's Designated Competent Person shall be provided. Evidence that the full-time Designated Competent Person is qualified in accordance with 29 CFR 1926, Sections .32 and .1101, has EPA Model Accreditation Plan (MAP) "Contractor/Supervisor" training accreditation required by 40 CFR 763, Subpart E, Appendix C, and is experienced in the administration and supervision of asbestos abatement projects, including exposure assessment and monitoring, work practices, abatement methods, protective measures for personnel, setting up and inspecting asbestos abatement work areas, evaluating the integrity of containment barriers, placement and operation of local exhaust systems, ACM generated waste containment and disposal procedures, decontamination units installation and maintenance requirements, site safety and health requirements, notification of other employees onsite, etc. The duties of the Competent Person shall include the following: controlling entry to and exit from the regulated area; supervising any employee exposure monitoring required by 29 CFR 1926, Section .1101; ensuring that all employees working within a regulated area wear the appropriate personal protective equipment (PPE), are trained in the use of appropriate methods of exposure control, and use the hygiene facilities and decontamination procedures specified; and ensuring that engineering controls in use are in proper operating conditions and are functioning properly. The Designated Competent Person shall be responsible for compliance with applicable federal, state and local requirements, the Contractor's Accident Prevention Plan and Asbestos Hazard Abatement Plan. The Designated Competent Person shall provide, and the Contractor shall submit, the "Contractor/Supervisor" course completion certificate and the most recent certificate for required refresher training with the employee "Certificate of Worker Acknowledgment" required by this paragraph. The Contractor shall submit evidence that this person has a minimum of 2 years of on-the-job asbestos abatement experience relevant to OSHA competent person requirements. The Designated Competent Person shall be onsite at all times during the conduct of this project.

b. Project and Other Supervisors: The Contractor shall provide the

name, address, telephone number, and resume of the Project Supervisor and other supervisors who have responsibility to implement the Accident Prevention Plan, including the Asbestos Hazard Abatement Plan and Activity Hazard Analyses, the authority to direct work performed under this contract and verify compliance, and have EPA Model Accreditation Plan (MAP) "Contractor/Supervisor" training accreditation required by 40 CFR 763, Subpart E, Appendix C. The Project Supervisor and other supervisors shall provide, and the Contractor shall submit, the "Contractor/Supervisor" course completion certificate and the most recent certificate for required refresher training with the employee "Certificate of Worker Acknowledgment" required by this paragraph. The Contractor shall submit evidence that the Project Supervisor has a minimum of 2 years of on-the-job asbestos abatement experience relevant to project supervisor responsibilities and the other supervisors have a minimum of 1 year on-the-job asbestos abatement experience commensurate with the responsibilities they will have on this project.

c. Designated Industrial Hygienist: The Contractor shall provide the name, address, telephone number, resume and other information specified below for the Industrial Hygienist (IH) selected to prepare the Contractor's Asbestos Hazard Abatement Plan, prepare and perform training, direct air monitoring and assist the Contractor's Competent Person in implementing and ensuring that safety and health requirements are complied with during the performance of all required work. The Designated IH shall be a person who is board certified in the practice of industrial hygiene or board eligible (meets all education and experience requirements) as determined and documented by the American Board of Industrial Hygiene (ABIH), has EPA Model Accreditation Plan (MAP) "Contractor/Supervisor" training accreditation required by 40 CFR 763, Subpart E, Appendix C, and has a minimum of 2 years of comprehensive experience in planning and overseeing asbestos abatement activities. The Designated IH shall provide, and the Contractor shall submit, the "Contractor/Supervisor" course completion certificate and the most recent certificate for required refresher training with the employee "Certificate of Worker Acknowledgment" required by this paragraph. The Designated IH shall be completely independent from the Contractor according to federal, state, or local regulations; that is, shall not be a Contractor's employee or be an employee or principal of a firm in a business relationship with the Contractor negating such independent status. A copy of the Designated IH's current valid ABIH certification or confirmation of eligibility in writing from the ABIH shall be included. The Designated IH shall visit the site initially and as needed for the duration of asbestos activities and shall be available for emergencies.

d. Asbestos Abatement Workers: Asbestos abatement workers shall meet the requirements contained in 29 CFR 1926, Section .1101, 40 CFR 61, Subpart M, and other applicable federal, state and local requirements. Worker training documentation shall be provided as required on the "Certificate of Workers Acknowledgment" in this paragraph.

e. Worker Training and Certification of Worker Acknowledgment: Training documentation will be required for each employee who will perform OSHA Class I, Class II, Class III, or Class IV asbestos

abatement operations. Such documentation shall be submitted on a Contractor generated form titled "Certificate of Workers Acknowledgment", to be completed for each employee in the same format and containing the same information as the example certificate at the end of this section. Training course completion certificates (initial and most recent update refresher) required by the information checked on the form shall be attached.

f. Physician: The Contractor shall provide the name, medical qualifications, address, and telephone number of the physician who will or has performed the medical examinations and evaluations of the persons who will conduct the asbestos abatement work tasks. The physician shall be currently licensed by the state where the workers will be or have been examined, have expertise in pneumoconiosis and shall be responsible for the determination of medical surveillance protocols and for review of examination/test results performed in compliance with 29 CFR 1926, Section .1101 and paragraph MEDICAL REQUIREMENTS. The physician shall be familiar with the site's hazards and the scope of this project. The physician is not required to visit the work site.

g. First Aid and CPR Trained Persons: The names of at least 2 persons who are currently trained in first aid and CPR by the American Red Cross or other approved agency shall be designated and shall be onsite at all times during site operations. They shall be trained in universal precautions and the use of PPE as described in the Bloodborne Pathogens Standard of 29 CFR 1910, Section .1030 and shall be included in the Contractor's Bloodborne Pathogen Program. These persons may perform other duties but shall be immediately available to render first aid when needed. A copy of each designated person's current valid First Aid and CPR certificate shall be provided.

h. Independent Testing Laboratory: The Contractor shall provide the name, address and telephone number of the independent testing laboratory selected to perform the sample analyses and report the results. The testing laboratory shall be completely independent from the Contractor as recognized by federal, state or local regulations. Written verification of the following criteria, signed by the testing laboratory principal and the Contractor, shall be submitted:

(1) Phase contrast microscopy (PCM): The laboratory is fully equipped and proficient in conducting PCM of airborne samples using the methods specified by 29 CFR 1926, Section .1101, OSHA method ID-160, the most current version of NIOSH Pub No. 84-100 Method 7400; the laboratory is currently judged proficient (classified as acceptable) in counting airborne asbestos samples by PCM by successful participation in each of the last 4 rounds in the American Industrial Hygiene Association (AIHA) Proficiency Analytical Testing (PAT) Program. The selected microscopists who will analyze airborne samples by PCM shall be judged proficient in counting samples as current participating analysts in the AIHA PAT Program, and shall have successfully completed the Asbestos Sampling and Analysis course (NIOSH 582 or equivalent) .

(2) Polarized light microscopy (PLM): If bulk analysis is required, provide evidence that the laboratory is fully equipped and proficient in conducting PLM analyses of suspect ACM bulk

samples in accordance with 40 CFR 763, Subpart E, Appendix E; the laboratory is currently accredited by NIST under the NVLAP for bulk asbestos analysis and will use analysts (names shall be provided) with demonstrated proficiency to conduct PLM to include its application to the identification and quantification of asbestos content.

(3) Transmission electron microscopy (TEM): The laboratory is fully equipped and proficient in conducting TEM analysis of airborne samples using the mandatory method specified by 40 CFR 763, Subpart E, Appendix E; the laboratory is currently accredited by NIST under the NVLAP for airborne sample analysis of asbestos by TEM; the laboratory will use analysts that are currently evaluated as competent with demonstrated proficiency under the NIST NVLAP for airborne sample analysis of asbestos by TEM or proficient in conducting analysis for low asbestos concentration, enhanced analysis of floor tiles and bulk materials where multiple layers are present, using an improved EPA test method titled, "Method for the Determination of Asbestos in Bulk Building Materials".

i. Disposal Facility, Transporter: The Contractor shall provide written evidence that the landfill to be used is approved for asbestos disposal by the USEPA, state and local regulatory agencies. Copies of signed agreements between the Contractor (including subcontractors and transporters) and the asbestos waste disposal facility to accept and dispose of all asbestos containing waste generated during the performance of this contract shall be provided. Qualifications shall be provided for each subcontractor or transporter to be used, indicating previous experience in transport and disposal of asbestos waste to include all required state and local waste hauler requirements for asbestos. The Contractor and transporters shall meet the DOT requirements of 49 CFR 171, 49 CFR 172, and 49 CFR 173 as well as registration requirements of 49 CFR 107 and other applicable state or local requirements. The disposal facility shall meet the requirements of 40 CFR 61, Sections .154 or .155, as required in 40 CFR 61, Section .150(b), and other applicable state or local requirements.

## 1.6 REGULATORY REQUIREMENTS

In addition to detailed requirements of this specification, work performed under this contract shall comply with EM 385-1-1, applicable federal, state, and local laws, ordinances, criteria, rules and regulations regarding handling, storing, transporting, and disposing of asbestos waste materials. This includes, but is not limited to, OSHA standards, 29 CFR 1926, especially Section .1101, 40 CFR 61, Subpart M and 40 CFR 763. Matters of interpretation of standards shall be submitted to the appropriate administrative agency for resolution before starting work. Where the requirements of this specification, applicable laws, criteria, ordinances, regulations, and referenced documents vary, the most stringent requirements shall apply.

## 1.7 SAFETY AND HEALTH PROGRAM AND PLANS

The Contractor shall develop and submit a written comprehensive site-specific Accident Prevention Plan at least 30 days prior to the preconstruction conference. The Accident Prevention Plan shall address requirements of EM 385-1-1, Appendix A, covering onsite work to be

performed by the Contractor and subcontractors. The Accident Prevention Plan shall incorporate an Asbestos Hazard Abatement Plan, and Activity Hazard Analyses as separate appendices into one (1) site specific Accident Prevention Plan document. Any portions of the Contractor's overall Safety and Health Program that are referenced in the Accident Prevention Plan, e.g., respirator program, hazard communication program, confined space entry program, etc., shall be included as appendices to the Accident Prevention Plan. The plan shall be prepared, signed (and sealed, including certification number if required), and dated by the Contractor's Designated IH, Competent Person, and Project Supervisor.

1.7.1 Asbestos Hazard Abatement Plan Appendix

The Asbestos Hazard Abatement Plan appendix to the Accident Prevention Plan shall include, but not be limited to, the following:

a. The personal protective equipment to be used;

b. The location and description of regulated areas including clean and dirty areas, and decontamination unit (clean room, shower room, equipment room, storage areas such as load-out unit);

c. Initial exposure assessment in accordance with 29 CFR 1926, Section .1101;

d. Level of supervision;

e. Method of notification of other employers at the worksite;

f. Abatement method to include containment and control procedures;

g. Interface of trades involved in the construction;

h. Sequencing of asbestos related work;

i. Storage and disposal procedures and plan;

j. Type of wetting agent to be used;

k. Location of local exhaust equipment;

l. Air monitoring methods (personal, environmental and clearance);

m. Bulk sampling and analytical methods (if required);

n. A detailed description of the method to be employed in order to control the spread of ACM wastes and airborne fiber concentrations;

o. Fire and medical emergency response procedures;

p. The security procedures to be used for all regulated areas.

1.7.2 Activity Hazard Analyses Appendix

Activity Hazard Analyses, for each major phase of work, shall be submitted and updated during the project. The Activity Hazard Analyses format shall be in accordance with EM 385-1-1 (Figure 1-1). The analysis shall define the activities to be performed for a major phase of work, identify the sequence of work, the specific hazards anticipated, and the control

measures to be implemented to eliminate or reduce each hazard to an acceptable level. Work shall not proceed on that phase until the Activity Hazard Analyses has been accepted and a preparatory meeting has been conducted by the Contractor to discuss its contents with everyone engaged in the activities, including the onsite Government representatives. The Activity Hazard Analyses shall be continuously reviewed and, when appropriate, modified to address changing site conditions or operations.

## 1.8 PRECONSTRUCTION CONFERENCE AND ONSITE SAFETY

The Contractor and the Contractor's Designated Competent Person, Project Supervisor, and Designated IH shall meet with the Contracting Officer prior to beginning work at a safety preconstruction conference to discuss the details of the Contractor's submitted Accident Prevention Plan to include the Asbestos Hazard Abatement Plan and Activity Hazard Analyses appendices. Deficiencies in the Accident Prevention Plan will be discussed and the Accident Prevention Plan shall be revised to correct the deficiencies and resubmitted for acceptance. Any changes required in the specification as a result of the Accident Prevention Plan shall be identified specifically in the plan to allow for free discussion and acceptance by the Contracting Officer, prior to the start of work. Onsite work shall not begin until the Accident Prevention Plan has been accepted. A copy of the written Accident Prevention Plan shall be maintained onsite. Changes and modifications to the accepted Accident Prevention Plan shall be made with the knowledge and concurrence of the Designated IH, the Project Supervisor, Designated Competent Person, and the Contracting Officer. Should any unforeseen hazard become evident during the performance of the work, the Designated IH shall bring such hazard to the attention of the Project Supervisor, Designated IH, and the Contracting Officer, both verbally and in writing, for resolution as soon as possible. In the interim, all necessary action shall be taken by the Contractor to restore and maintain safe working conditions in order to safeguard onsite personnel, visitors, the public, and the environment. Once accepted by the Contracting Officer, the Accident Prevention Plan, including the Asbestos Hazard Abatement Plan and Activity Hazard Analyses will be enforced as if an addition to the contract. Disregarding the provisions of this contract or the accepted Accident Prevention Plan will be cause for stopping of work, at the discretion of the Contracting Officer, until the matter has been rectified.

## 1.9 SECURITY

Barriers to prevent entry of unauthorized personnel shall be provided for each regulated area. A log book shall be kept documenting entry into and out of the regulated area. Entry into regulated areas shall only be by personnel authorized by the Contractor and the Contracting Officer. Personnel authorized to enter regulated areas shall be trained, be medically evaluated, and wear the required personal protective equipment for the specific regulated area to be entered.

## 1.10 MEDICAL REQUIREMENTS

Medical requirements shall conform to 29 CFR 1926, Section .1101.

### 1.10.1 Medical Examinations

Before being exposed to airborne asbestos fibers, workers shall be provided with a medical examination as required by 29 CFR 1926, Section .1101 and other pertinent state or local requirements. This requirement shall have been satisfied within the last 12 months. The same medical examination

shall be given on an annual basis to employees engaged in an occupation involving asbestos and within 30 calendar days before or after the termination of employment in such occupation. X-ray films of asbestos workers shall be identified to the consulting radiologist and medical record jackets shall be marked with the word "asbestos."

1.10.1.1 Information Provided to the Physician

The Contractor shall provide the following information in writing to the examining physician:

a. A copy of 29 CFR 1926, Section .1101 and Appendices D, E, G, and I;

b. A description of the affected employee's duties as they relate to the employee's exposure;

c. The employee's representative exposure level or anticipated exposure level;

d. A description of any personal protective and respiratory equipment used or to be used;

e. Information from previous medical examinations of the affected employee that is not otherwise available to the examining physician.

1.10.1.2 Written Medical Opinion

For each worker, a written medical opinion prepared and signed by a licensed physician indicating the following:

a. Summary of the results of the examination.

b. The potential for an existing physiological condition that would place the employee at an increased risk of health impairment from exposure to asbestos.

c. The ability of the individual to wear personal protective equipment, including respirators, while performing strenuous work tasks under cold and/or heat stress conditions.

d. A statement that the employee has been informed of the results of the examination, provided with a copy of the results, informed of the increased risk of lung cancer attributable to the combined effect of smoking and asbestos exposure, and informed of any medical condition that may result from asbestos exposure.

1.10.2 Medical and Exposure Records

Complete and accurate records shall be maintained of each employee's medical examinations, medical records, and exposure data, as required by 29 CFR 1910, Section .1910.20 and 29 CFR 1926, Section .1101 for a period of 50 years after termination of employment. Records of the required medical examinations and exposure data shall be made available, for inspection and copying, to the Assistant Secretary of Labor for Occupational Safety and Health (OSHA) or authorized representatives of the employee and an employee's physician upon request of the employee or former employee. A copy of the required medical certification for each employee shall be maintained on file at the worksite for review, as requested by the

Contracting Officer or the representatives.

## 1.11 TRAINING PROGRAM

### 1.11.1 General Training Requirements

The Contractor shall establish a training program as specified by EPA Model Accreditation Plan (MAP), training requirements at 40 CFR 763, Subpart E, Appendix C, the State of Virginia, OSHA requirements at 29 CFR 1926, Section .1101(k)(9), and this specification. Contractor employees shall complete the required training for the type of work they are to perform and such training shall be documented and provided to the Contracting Officer as specified in paragraph QUALIFICATIONS.

### 1.11.2 Project Specific Training

Prior to commencement of work, each worker shall be instructed in the following project specific training:

a. The hazards and health effects of the specific types of ACM to be abated;

b. The content and requirements of the Contractor's Accident Prevention Plan to include the Asbestos Hazard Abatement Plan and Activity Hazard Analyses and site-specific safety and health precautions;

c. Hazard Communication Program;

d. Hands-on training for each asbestos abatement technique to be employed;

e. Heat and/or cold stress monitoring specific to this project;

f. Air monitoring program and procedures;

g. Medical surveillance to include medical and exposure record-keeping procedures;

h. The association of cigarette smoke and asbestos-related disease;

i. Security procedures;

j. Specific work practice controls and engineering controls required for each Class of work in accordance with 29 CFR 1926, Section .1101.

## 1.12 RESPIRATORY PROTECTION PROGRAM

The Contractor shall establish in writing, and implement a respiratory protection program in accordance with 29 CFR 1926, Section .1101, 29 CFR 1910, Section .134, ANSI Z88.2, CGA G-7, CGA G-7.1 and DETAIL SHEET 12. The Contractor shall establish minimum respiratory protection requirements based on measured or anticipated levels of airborne asbestos fiber concentrations encountered during the performance of the asbestos abatement work. The Contractor's respiratory protection program shall include, but not be limited to, the following elements:

a. The company policy, used for the assignment of individual responsibility, accountability, and implementation of the

respiratory protection program.

b. The standard operating procedures covering the selection and use of respirators. Respiratory selection shall be determined by the hazard to which the worker is exposed.

c. Medical evaluation of each user to verify that the worker may be assigned to an activity where respiratory protection is required.

d. Training in the proper use and limitations of respirators.

e. Respirator fit-testing, i.e., quantitative, qualitative and individual functional fit checks.

f. Regular cleaning and disinfection of respirators.

g. Routine inspection of respirators during cleaning and after each use when designated for emergency use.

h. Storage of respirators in convenient, clean, and sanitary locations.

i. Surveillance of regulated area conditions and degree of employee exposure (e.g., through air monitoring).

j. Regular evaluation of the continued effectiveness of the respiratory protection program.

k. Recognition and procedures for the resolution of special problems as they affect respirator use (e.g., no facial hair that comes between the respirator face piece and face or interferes with valve function; prescription eye wear usage; contact lenses usage; etc.).

l. Proper training in putting on and removing respirators.

### 1.12.1 Respiratory Fit Testing

A qualitative or quantitative fit test conforming to 29 CFR 1926, Section 1101, Appendix C shall be conducted for each Contractor worker required to wear a respirator, and for the Contracting Officer and authorized visitors who enter a regulated area where respirators are required to be worn. A respirator fit test shall be performed for each worker wearing a negative-pressure respirator prior to initially wearing a respirator on this project and every 6 months thereafter. The qualitative fit tests may be used only for testing the fit of half-mask respirators where they are permitted to be worn, or of full-facepiece air purifying respirators where they are worn at levels at which half-facepiece air purifying respirators are permitted. If physical changes develop that will affect the fit, a new fit test for the worker shall be performed. Functional fit checks shall be performed by employees each time a respirator is put on and in accordance with the manufacturer's recommendation.

### 1.12.2 Respirator Selection and Use Requirements

The Contractor shall provide respirators, and ensure that they are used as required by 29 CFR 1926, Section .1101 and in accordance with the manufacturer's recommendations. Respirators shall be approved by the National Institute for Occupational Safety and Health (MSHA/NIOSH), or by

NIOSH, under the provisions of 42 CFR 84, for use in environments containing airborne asbestos fibers. Personnel who handle ACM, enter regulated areas that require the wearing of a respirator, or who are otherwise carrying out abatement activities that require the wearing of a respirator, shall be provided with approved respirators that are fully protective of the worker at the measured or anticipated airborne asbestos concentration level to be encountered. For air-purifying respirators, the particulate filter portion of the cartridges or canister approved for use in airborne asbestos environments shall be high-efficiency particulate air (HEPA). The initial respirator selection and the decisions regarding the upgrading or downgrading of respirator type shall be made by the Contractor 's Designated IH based on the measured or anticipated airborne asbestos fiber concentrations to be encountered. Recommendations made by the Contractor to downgrade respirator type shall be submitted in writing to the Contracting Officer. The Contractor's Designated Competent Person shall have the authority to take immediate action to upgrade or downgrade respiratory type when there is an immediate danger to the health and safety of the wearer. Respirators shall be used in the following circumstances:

a. During all Class I asbestos jobs.

b. During all Class II work where the ACM is not removed in a substantially intact state.

c. During all Class II and III work which is not performed using wet methods. Respirators need not be worn during removal of ACM from sloped roofs when a negative exposure assessment has been made and ACM is removed in an intact state.

d. During all Class II and III asbestos jobs where the Contractor does not produce a negative exposure assessment.

e. During all Class III jobs where TSI or surfacing ACM is being disturbed.

f. During all Class IV work performed within regulated areas where employees performing other work are required to wear respirators.

g. During all work where employees are exposed above the PEL-TWA or PEL-Excursion Limit.

h. In emergencies

1.12.3 Class I Work

The Contractor shall provide: (1) a tight-fitting, powered air purifying respirator equipped with high efficiency filters, or (2) a full-facepiece supplied air respirator operated in the pressure demand mode, equipped with HEPA egress cartridges, or (3) an auxiliary positive pressure self-contained breathing apparatus, for all employees within the regulated area where Class I work is being performed; provided that a negative exposure assessment has not been produced, and that the exposure level will not exceed 1 f/cc as an 8-hour time weighted average. A full-facepiece supplied air respirator, operated in the pressure demand mode, equipped with an auxiliary positive pressure self-contained breathing apparatus shall be provided under such conditions, if the exposure assessment indicates exposure levels above 50 f/cc as an 8-hour time weighted average.

1.12.4 Class II and III Work

The Contractor shall provide an air purifying respirator, other than a disposable respirator, equipped with high-efficiency filters whenever the employee performs Class II and III asbestos jobs where the Contractor does not produce a negative exposure assessment ; and Class III jobs where TSI or surfacing ACM is being disturbed.

1.12.5 Sanitation

Employees who wear respirators shall be permitted to leave work areas to wash their faces and respirator facepieces whenever necessary to prevent skin irritation associated with respirator use.

1.13 HAZARD COMMUNICATION PROGRAM

A hazard communication program shall be established and implemented in accordance with 29 CFR 1926, Section .59. Material safety data sheets (MSDSs) shall be provided for all hazardous materials brought onto the worksite. One copy shall be provided to the Contracting Officer and 1 copy shall be included in the Contractor's Hazard Communication Program.

1.14 LICENSES, PERMITS AND NOTIFICATIONS

1.14.1 General Legal Requirements

Necessary licenses, permits and notifications shall be obtained in conjunction with the project's asbestos abatement, transportation and disposal actions and timely notification furnished of such actions as required by federal, state, regional, and local authorities. The Contractor shall notify the Regional Office of the USEPA, state's environmental protection agency responsible for asbestos air emissions, any local air pollution control district/agency, state OSHA program, and the Contracting Officer in writing, at least 10 days prior to the commencement of work, in accordance with 40 CFR 61, Subpart M, and state and local requirements to include the mandatory "Notification of Demolition and Renovation Record" form and other required notification documents. Notification shall be by Certified Mail, Return Receipt Requested. The Contractor shall furnish copies of the receipts to the Contracting Officer, in writing, prior to the commencement of work. A copy of the rental company's written acknowledgment and agreement shall be provided as required by paragraph RENTAL EQUIPMENT. For licenses, permits, and notifications that the Contractor is responsible for obtaining, the Contractor shall pay any associated fees or other costs incurred.

1.14.2 Litigation and Notification

The Contractor shall notify the Contracting Officer if any of the following occur:

a. The Contractor or any of the subcontractors are served with notice of violation of any law, regulation, permit or license which relates to this contract;

b. Proceedings are commenced which could lead to revocation of related permits or licenses; permits, licenses or other Government authorizations relating to this contract are revoked;

c. Litigation is commenced which would affect this contract;

d. The Contractor or any of the subcontractors become aware that their equipment or facilities are not in compliance or may fail to comply in the future with applicable laws or regulations.

## 1.15 PERSONAL PROTECTIVE EQUIPMENT

Three complete sets of personal protective equipment shall be made available to the Contracting Officer and authorized visitors for entry to the regulated area. Contracting Officer and authorized visitors shall be provided with training equivalent to that provided to Contractor employees in the selection, fitting, and use of the required personal protective equipment and the site safety and health requirements. Contractor workers shall be provided with personal protective clothing and equipment and the Contractor shall ensure that it is worn properly. The Contractor's Designated IH and Designated Competent Person shall select and approve all the required personal protective clothing and equipment to be used.

### 1.15.1 Respirators

Respirators shall be in accordance with paragraph RESPIRATORY PROTECTION PROGRAM.

### 1.15.2 Whole Body Protection

Personnel exposed to airborne concentrations of asbestos that exceed the PELs, or for all OSHA Classes of work for which a required negative exposure assessment is not produced, shall be provided with whole body protection and such protection shall be worn properly. The Contractor's Designated IH and Competent Person shall select and approve the whole body protection to be used. The Competent Person shall examine work suits worn by employees at least once per work shift for rips or tears that may occur during performance of work. When rips or tears are detected while an employee is working, rips and tears shall be immediately mended, or the work suit shall be immediately replaced. Disposable whole body protection shall be disposed of as asbestos contaminated waste upon exiting from the regulated area. Reusable whole body protection worn shall be either disposed of as asbestos contaminated waste upon exiting from the regulated area or be properly laundered in accordance with 29 CFR 1926, Section .1101. Whole body protection used for asbestos abatement shall not be removed from the worksite by a worker to be cleaned. Recommendations made by the Contractor's Designated IH to downgrade whole body protection shall be submitted in writing to the Contracting Officer. The Contractor's Designated Competent Person, in consultation with the Designated IH, has the authority to take immediate action to upgrade or downgrade whole body protection when there is an immediate danger to the health and safety of the wearer.

#### 1.15.2.1 Coveralls

Disposable-impermeable coveralls with a zipper front shall be provided. Sleeves shall be secured at the wrists, and foot coverings secured at the ankles. See DETAIL SHEET 13.

1.15.2.2 NOT USED

1.15.2.3 Work Clothing

An additional coverall shall be provided when the abatement and control method employed does not provide for the exit from the regulated area directly into an attached decontamination unit. Cloth work clothes for wear under the protective coverall, and foot coverings, shall be provided when work is being conducted in low temperature conditions. Cloth work clothes shall be either disposed of as asbestos contaminated waste or properly laundered in accordance with 29 CFR 1926, Section .1101.

1.15.2.4 Gloves

Gloves shall be provided to protect the hands. Where there is the potential for hand injuries (i.e., scrapes, punctures, cuts, etc.) a suitable glove shall be provided and used.

1.15.2.5 Foot Coverings

Cloth socks shall be provided and worn next to the skin. Footwear, as required by OSHA and EM 385-1-1, that is appropriate for safety and health hazards in the area shall be worn. Rubber boots shall be used in moist or wet areas. Reusable footwear removed from the regulated area shall be thoroughly decontaminated or disposed of as ACM waste. Disposable protective foot covering shall be disposed of as ACM waste. If rubber boots are not used, disposable foot covering shall be provided.

1.15.2.6 Head Covering

Hood type disposable head covering shall be provided. In addition, protective head gear (hard hats) shall be provided as required. Hard hats shall only be removed from the regulated area after being thoroughly decontaminated.

1.15.2.7 Protective Eye Wear

Eye protection provided shall be in accordance with ANSI Z87.1.

1.16 HYGIENE FACILITIES AND PRACTICES

The Contractor shall establish a decontamination area for the decontamination of employees, material and equipment. The Contractor shall ensure that employees enter and exit the regulated area through the decontamination area. The decontamination facility used shall comply with Federal and state regulations and these specifications.

1.16.1 Shower Facilities

Shower facilities, when provided, shall comply with 29 CFR 1910, Section .141(d)(3).

1.16.2 3-Stage Decontamination Area

A temporary negative pressure decontamination unit that is adjacent and attached in a leak-tight manner to the regulated area shall be provided where appropriate for the work performed and as described in SET-UP DETAIL SHEET Numbers 22 and 23. Utilization of prefabricated units shall have

prior approval of the Contracting Officer. The decontamination unit shall have an equipment room and a clean room separated by a shower that complies with 29 CFR 1910, Section .141 (unless the Contractor can demonstrate that such facilities are not feasible). Equipment and surfaces of containers filled with ACM shall be cleaned prior to removing them from the equipment room or area. Surfaces of the equipment room shall be wet wiped 2 times after each shift. Materials used for wet wiping shall be disposed of as asbestos contaminated waste. Two separate lockers shall be provided for each asbestos worker, one in the equipment room and one in the clean room. If approved by the Contracting Officer, hot water service may be secured from the building hot water system provided backflow protection is installed by the Contractor at the point of connection. Should sufficient hot water be unavailable, the Contractor shall provide a minimum 40 gal. electric water heater with minimum recovery rate of 20 gal. per hour and a temperature controller for each showerhead. The Contractor shall provide a minimum of 2 showers. Instantaneous type in-line water heater may be incorporated at each shower head in lieu of hot water heater, upon approval by the Contracting Officer. Flow and temperature controls shall be located within the shower and shall be adjustable by the user. The wastewater pump shall be sized for 1.25 times the showerhead flow-rate at a pressure head sufficient to satisfy the filter head loss and discharge line losses. The pump shall supply a minimum 25 gpm flow with 35 ft. of pressure head. Used shower water shall be collected and filtered to remove asbestos contamination. Filters and residue shall be disposed of as asbestos contaminated material, per DETAIL SHEETS 9 and 14. Filtered water shall be discharged to the sanitary system. Wastewater filters shall be installed in series with the first stage pore size of 20 microns and the second stage pore size of 5 microns. The floor of the decontamination unit's clean room shall be kept dry and clean at all times. Water from the shower shall not be allowed to wet the floor in the clean room. Surfaces of the clean room and shower shall be wet-wiped once per end of shift with a disinfectant solution. Proper housekeeping and hygiene requirements shall be maintained. Soap and towels shall be provided for showering, washing and drying. Any cloth towels provided shall be disposed of as ACM waste or shall be laundered in accordance with 29 CFR 1926, Section .1101.

### 1.16.3 Load-Out Unit

A temporary load-out unit that is adjacent and connected to the regulated area shall be provided. Utilization of prefabricated units shall have prior approval of the Contracting Officer. The load-out unit shall be attached in a leak-tight manner to each regulated area. Surfaces of the load-out unit and access tunnel shall be adequately wet-wiped 2 times after each shift change. Materials used for wet wiping shall be disposed of as asbestos contaminated waste.

### 1.16.4 Single Stage Decontamination Area

A decontamination area (equipment room/area) may be provided for Class I work involving less than 25 feet or 10 square feet of TSI or surfacing ACM, and for Class II and Class III asbestos work operations where exposures exceed the PELs or where there is no negative exposure assessment produced before the operation. The equipment room or area shall be adjacent to the regulated area for the decontamination of employees, material, and their equipment which is contaminated with asbestos. The equipment room or area shall consist of an area covered by an impermeable drop cloth on the floor or horizontal working surface. The area must be of sufficient size to accommodate cleaning of equipment and removing personal protective equipment without spreading contamination beyond the area.

Surfaces of the equipment room shall be wet wiped 2 times after each shift. Materials used for wet wiping shall be disposed of as asbestos contaminated waste.

1.16.5 NOT USED

1.16.6 Decontamination Area Entry Procedures

The Contractor shall ensure that employees entering the decontamination area through the clean room or clean area:

a. Remove street clothing in the clean room or clean area and deposit it in lockers.

b. Put on protective clothing and respiratory protection before leaving the clean room or clean area.

c. Pass through the equipment room to enter the regulated area.

1.16.7 Decontamination Area Exit Procedures

The Contractor shall ensure that the following procedures are followed:

a. Before leaving the regulated area, respirators shall be worn while employees remove all gross contamination and debris from their work clothing using a HEPA vacuum.

b. Employees shall remove their protective clothing in the equipment room and deposit the clothing in labeled impermeable bags or containers (see Detail Sheets 9 and 14) for disposal and/or laundering.

c. Employees shall not remove their respirators in the equipment room.

d. Employees shall shower prior to entering the clean room. If a shower has not been located between the equipment room and the clean room or the work is performed outdoors, the Contractor shall ensure that employees engaged in Class I asbestos jobs: a) Remove asbestos contamination from their work suits in the equipment room or decontamination area using a HEPA vacuum before proceeding to a shower that is not adjacent to the work area; or b) Remove their contaminated work suits in the equipment room, without cleaning worksuits, and proceed to a shower that is not adjacent to the work area.

e. After showering, employees shall enter the clean room before changing into street clothes.

1.16.8 Lunch Areas

The Contractor shall provide lunch areas in which the airborne concentrations of asbestos are below 0.01 f/cc.

1.16.9 Smoking

Smoking, if allowed by the Contractor, shall only be permitted in designated areas approved by the Contracting Officer.

1.17 REGULATED AREAS

All Class I and II asbestos work shall be conducted within regulated areas. The regulated area shall be demarcated to minimize the number of persons within the area and to protect persons outside the area from exposure to airborne asbestos. Where critical barriers or negative pressure enclosures are used, they shall demarcate the regulated area. Access to regulated areas shall be limited to authorized persons. The Contractor shall control access to regulated areas, ensure that only authorized personnel enter, and verify that Contractor required medical surveillance, training and respiratory protection program requirements are met prior to allowing entrance.

1.18 WARNING SIGNS AND TAPE

Warning signs and tape printed in language(s) understood by all who access the area shall be provided at the regulated boundaries and entrances to regulated areas. The Contractor shall ensure that all personnel working in areas contiguous to regulated areas comprehend the warning signs. Signs shall be located to allow personnel to read the signs and take the necessary protective steps required before entering the area. Warning signs, as shown and described in DETAIL SHEET 11, shall be in vertical format conforming to 29 CFR 1910 and 29 CFR 1926, Section .1101, a minimum of 20 by 14 inches, and displaying the following legend in the lower panel:

DANGER
ASBESTOS
CANCER AND LUNG DISEASE HAZARD
AUTHORIZED PERSONNEL ONLY
RESPIRATORS AND PROTECTIVE CLOTHING ARE REQUIRED IN THIS AREA

Spacing between lines shall be at least equal to the height of the upper of any two lines. Warning tape shall be provided as shown and described on DETAIL SHEET 11. Decontamination unit signage shall be as shown and described on DETAIL SHEET 15.

1.19 WARNING LABELS

Warning labels shall be affixed to all asbestos disposal containers used to contain asbestos materials, scrap, waste debris, and other products contaminated with asbestos. Containers with preprinted warning labels conforming to requirements are acceptable. Warning labels shall be as described in DETAIL SHEET 14, shall conform to 29 CFR 1926, Section .1101 and shall be of sufficient size to be clearly legible displaying the following legend:

DANGER
CONTAINS ASBESTOS FIBERS
AVOID CREATING DUST
CANCER AND LUNG DISEASE HAZARD

1.20 Local Exhaust Ventilation

Local exhaust ventilation units shall conform to ANSI Z9.2 and 29 CFR 1926, Section .1101. Filters on local exhaust system equipment shall conform to ANSI Z9.2 and UL 586. Filter shall be UL labeled.

1.21 TOOLS

Vacuums shall be leak proof to the filter, equipped with HEPA filters, of sufficient capacity and necessary capture velocity at the nozzle or nozzle attachment to efficiently collect, transport and retain the ACM waste material. Power tools shall not be used to remove ACM unless the tool is equipped with effective, integral HEPA filtered exhaust ventilation capture and collection system, or has otherwise been approved for use by the Contracting Officer. Residual asbestos shall be removed from reusable tools prior to storage and reuse. Reusable tools shall be thoroughly decontaminated prior to being removed from regulated areas.

1.22 RENTAL EQUIPMENT

If rental equipment is to be used, written notification shall be provided to the rental agency, concerning the intended use of the equipment, the possibility of asbestos contamination of the equipment and the steps that will be taken to decontaminate such equipment. A written acceptance of the terms of the Contractor's notification shall be obtained from the rental agency.

1.23 AIR MONITORING EQUIPMENT

The Contractor's Designated IH shall approve air monitoring equipment to be used to collect samples. The equipment shall include, but shall not be limited to:

a. High-volume sampling pumps that can be calibrated and operated at a constant airflow up to 16 liters per minute when equipped with a sampling train of tubing and filter cassette.

b. Low-volume, battery powered, body-attachable, portable personal pumps that can be calibrated to a constant airflow up to approximately 3.5 liters per minute when equipped with a sampling train of tubing and filter cassette, and a self-contained rechargeable power pack capable of sustaining the calibrated flow rate for a minimum of 10 hours. The pumps shall also be equipped with an automatic flow control unit which shall maintain a constant flow, even as filter resistance increases due to accumulation of fiber and debris on the filter surface.

c. Single use standard 25 mm diameter cassette, open face, 0.8 micron pore size, mixed cellulose ester membrane filters and cassettes with 50 mm electrically conductive extension cowl, and shrink bands, to be used with low flow pumps in accordance with 29 CFR 1926, Section .1101 for personal air sampling.

d. Appropriate plastic tubing to connect the air sampling pump to the selected filter cassette.

e. A flow calibrator capable of calibration to within plus or minus 2 percent of reading over a temperature range of minus 4 to plus 140 degrees F and traceable to a NIST primary standard.

1.24 EXPENDABLE SUPPLIES

1.24.1 Glovebag

Glovebags shall be provided as described in 29 CFR 1926, Section .1101 and

SET-UP DETAIL SHEET 10. The glovebag assembly shall be 6 mil thick plastic, prefabricated and seamless at the bottom with preprinted OSHA warning label.

1.24.2 Duct Tape

Industrial grade duct tape of appropriate widths suitable for bonding sheet plastic and disposal container shall be provided.

1.24.3 Disposal Containers

Leak-tight (defined as solids, liquids, or dust that cannot escape or spill out) disposal containers shall be provided for ACM wastes as required by 29 CFR 1926 Section .1101 and DETAIL SHEETS 9A, 9B, 9C and 14.

1.24.4 Disposal Bags

Leak-tight bags, 6 mil thick, shall be provided for placement of asbestos generated waste as described in DETAIL SHEET 9A.

1.24.5 NOT USED

1.24.6 Cardboard Boxes

Heavy-duty corrugated cardboard boxes, coated with plastic or wax to retard deterioration from moisture, shall be provided as described in DETAIL SHEET 9C, if required by state and local requirements. Boxes shall fit into selected ACM disposal bags. Filled boxes shall be sealed leak-tight with duct tape.

1.24.7 Sheet Plastic

Sheet plastic shall be polyethylene of 6 mil minimum thickness and shall be provided in the largest sheet size necessary to minimize seams. Film shall conform to ASTM D 4397.

1.24.8 Amended Water

Amended water shall meet the requirements of ASTM D 1331.

1.24.9 Mastic Removing Solvent

Mastic removing solvent shall be nonflammable and shall not contain methylene chloride, glycol ether, or halogenated hydrocarbons. Solvents used onsite shall have a flash point greater than 140 degrees F.

1.24.10 Leak-tight Wrapping

Two layers of 6 mil minimum thick polyethylene sheet stock shall be used for the containment of removed asbestos-containing components or materials too large to be placed in disposal bags as described in DETAIL SHEET 9B. Upon placement of the ACM component or material, each layer shall be individually leak-tight sealed with duct tape.

1.25 MISCELLANEOUS ITEMS

A sufficient quantity of other items, such as, but not limited to: scrapers, brushes, brooms, staple guns, tarpaulins, shovels, rubber squeegees, dust pans, other tools, scaffolding, staging, enclosed chutes,

wooden ladders, lumber necessary for the construction of containments, UL approved temporary electrical equipment, material and cords, ground fault circuit interrupters, water hoses of sufficient length, fire extinguishers, first aid kits, portable toilets, logbooks, log forms, markers with indelible ink, spray paint in bright color to mark areas, project boundary fencing, etc., shall be provided.

## PART 2 PRODUCTS

### 2.1 NOT USED

### 2.2 NOT USED

### 2.3 RECYCLABLE MATERIALS

The Contractor shall comply with EPA requirements in accordance with Section 01670 RECYCLED / RECOVERED MATERIALS.

## PART 3 EXECUTION

### 3.1 GENERAL REQUIREMENTS

Asbestos abatement work tasks shall be performed as summarized in paragraph DESCRIPTION OF WORK and the Contractor's Accident Prevention Plan, Asbestos Hazard Abatement Plan, and the Activity Hazard Analyses. The Contractor shall use the engineering controls and work practices required in 29 CFR 1926, Section .1101(g) in all operations regardless of the levels of exposure. Personnel shall wear and utilize protective clothing and equipment as specified. The Contractor shall not permit eating, smoking, drinking, chewing or applying cosmetics in the regulated area. All hot work (burning, cutting, welding, etc.) shall be conducted under controlled conditions in conformance with 29 CFR 1926, Section .352, Fire Prevention. Personnel of other trades, not engaged in asbestos abatement activities, shall not be exposed at any time to airborne concentrations of asbestos unless all the administrative and personal protective provisions of the Contractor's Accident Prevention Plan are complied with. Power to the regulated area shall be locked-out and tagged in accordance with 29 CFR 1910, and temporary electrical service with ground fault circuit interrupters shall be provided as needed. Temporary electrical service shall be disconnected when necessary for wet removal. The Contractor shall stop abatement work in the regulated area immediately when the airborne total fiber concentration: (1) equals or exceeds 0.01 f/cc, or the pre-abatement concentration, whichever is greater, outside the regulated area; or (2) equals or exceeds 1.0 f/cc inside the regulated area. The Contractor shall correct the condition to the satisfaction of the Contracting Officer, including visual inspection and air sampling. Work shall resume only upon notification by the Contracting Officer. Corrective actions shall be documented.

### 3.2 PROTECTION OF ADJACENT WORK OR AREAS TO REMAIN

Asbestos abatement shall be performed without damage to or contamination of adjacent work or area. Where such work or area is damaged or contaminated, as verified by the Contracting Officer using visual inspection or sample analysis, it shall be restored to its original condition or decontaminated by the Contractor at no expense to the Government, as deemed appropriate by the Contracting Officer. This includes inadvertent spill of dirt, dust or debris in which it is reasonable to conclude that asbestos may exist. When these spills occur, work shall stop in all effected areas immediately and

the spill shall be cleaned. When satisfactory visual inspection and air sampling analysis results are obtained and have been evaluated by the Contractor's Designated IH and the Contracting Officer, work shall proceed.

## 3.3 OBJECTS

### 3.3.1 Removal of Mobile Objects

Mobile objects, furniture, and equipment will be removed from the area of work by the Government before asbestos abatement work begins.

### 3.3.2 NOT USED

## 3.4 BUILDING VENTILATION SYSTEM AND CRITICAL BARRIERS

Building ventilating systems supplying air into or returning air out of a regulated area shall be isolated by airtight seals to prevent the spread of contamination throughout the system. Air-tight critical barriers shall be installed on building ventilating openings located inside the regulated area that supply or return air from the building ventilation system or serve to exhaust air from the building. The critical barriers shall consist of 2 layers of polyethylene. Edges to wall, ceiling and floor surfaces shall be sealed with industrial grade duct tape. Critical barriers shall be installed as shown on drawings and appended SET-UP DETAIL SHEETS.

## 3.5 PRECLEANING

Surfaces shall be cleaned by HEPA vacuum prior to establishment of containment.

## 3.6 METHODS OF COMPLIANCE

### 3.6.1 Mandated Practices

The Contractor shall employ proper handling procedures in accordance with 29 CFR 1926 and 40 CFR 61, Subpart M, and the specified requirements. The specific abatement techniques and items identified shall be detailed in the Contractor's Asbestos Hazard Abatement Plan including, but not limited to, details of construction materials, equipment, and handling procedures. The Contractor shall use the following engineering controls and work practices in all operations, regardless of the levels of exposure:

a. Vacuum cleaners equipped with HEPA filters to collect debris and dust containing ACM.

b. Wet methods or wetting agents to control employee exposures during asbestos handling, removal, cutting, and cleanup; except where it can be demonstrated that the use of wet methods is unfeasible due to, for example, the creation of electrical hazards, equipment malfunction, and in roofing.

c. Prompt clean-up and disposalin leak-tight containers of wastes and debris contaminated with asbestos.

d. Inspection and repair of polyethylene in work and high traffic areas.

e. Cleaning of equipment and surfaces of containers filled with ACM

prior to removing them from the equipment room or area.

3.6.2 Control Methods

The Contractor shall use the following control methods to comply with the PELs:

a. Local exhaust ventilation equipped with HEPA filter dust collection systems;

b. Enclosure or isolation of processes producing asbestos dust;

c. Ventilation of the regulated area to move contaminated air away from the breathing zone of employees and toward a filtration or collection device equipped with a HEPA filter;

d. Use of other work practices and engineering controls;

e. Where the feasible engineering and work practice controls described above are not sufficient to reduce employee exposure to or below the PELs, the Contractor shall use them to reduce employee exposure to the lowest levels attainable by these controls and shall supplement them by the use of respiratory protection that complies with paragraph, RESPIRATORY PROTECTION PROGRAM.

3.6.3 Unacceptable Practices

The following work practices and engineering controls shall not be used for work related to asbestos or for work which disturbs ACM, regardless of measured levels of asbestos exposure or the results of initial exposure assessments:

a. High-speed abrasive disc saws that are not equipped with point of cut ventilator or enclosures with HEPA filtered exhaust air.

b. Compressed air used to remove asbestos, or materials containing asbestos, unless the compressed air is used in conjunction with an enclosed ventilation system designed to capture the dust cloud created by the compressed air.

c. Dry sweeping, shoveling, or other dry clean-up of dust and debris containing ACM.

d. Employee rotation as a means of reducing employee exposure to asbestos.

3.6.4 Class I Work Procedures

In addition to requirements of paragraphs Mandated Practices and Control Methods, the following engineering controls and work practices shall be used:

a. A Competent Person shall supervise the installation and operation of the control system.

b. For jobs involving the removal of more than 25 feet or 10 square feet of TSI or surfacing material, the Contractor shall place critical barriers over all openings to the regulated area.

c. HVAC systems shall be isolated in the regulated area by sealing with a double layer of plastic or air-tight rigid covers.

d. Impermeable dropcloths ( 6 mil or greater thickness) shall be placed on surfaces beneath all removal activity.

e. Objects within the regulated area shall be handled as specified in paragraph OBJECTS.

f. Where a negative exposure assessment has not been provided or where exposure monitoring shows the PEL was exceeded, the regulated area shall be ventilated to move contaminated air away from the employee's breathing zone toward a HEPA unit or collection device.

3.6.5 Specific Control Methods for Class I Work

In addition to requirements of paragraph Class I Work Procedures, Class I asbestos work shall be performed using one or more of the control methods identified in the subparagraphs below. The Contractor shall propose the most suitable and cost efficient method for each regulated area in the Asbestos Hazard Abatement Plan. (See SECTION 01110)

3.6.5.1 NOT USED

3.6.5.2 Glovebag Systems

Glovebag systems shall be as shown in SETUP DETAIL SHEET 10. The glovebag system shall be used to remove ACM from straight runs of piping and elbows and other connections. Glovebags shall be used without modification and shall be smoke-tested for leaks and any leaks sealed prior to use. Glovebags shall be installed to completely cover the circumference of pipe or other structures where the work is to be done. Glovebags shall be used only once and shall not be moved. Glovebags shall not be used on surfaces that have temperatures exceeding 150 degrees F. Prior to disposal, glovebags shall be collapsed by removing air within them using a HEPA vacuum. Before beginning the operation, loose and friable material adjacent to the glovebag operation shall be wrapped and sealed in 2 layers of plastic or otherwise rendered intact. At least 2 persons shall perform Class I glovebag removal. Asbestos regulated work areas shall be established as specified and shown on detailed drawings and plans for glovebag abatement. Designated boundary limits for the asbestos work shall be established with rope or other continuous barriers and all other requirements for asbestos control areas shall be maintained, including area signage and boundary warning tape as specified in SET-UP DETAIL SHEET 11.

a. In addition to requirements for negative pressure glovebag systems above, the Contractor shall attach HEPA vacuum systems or other devices to the bag to prevent collapse during removal of ACM from straight runs of piping and elbows and other connections.

3.6.5.3 Mini-Enclosures

Single bulkhead containment or Mini-containment (small walk-in enclosure) as shown in SETUP DETAIL SHEET 7 to accommodate no more than 2 persons, may be used if the disturbance or removal can be completely contained by the enclosure with the following specifications and work practices. The mini-enclosure shall be inspected for leaks and smoke tested before each

use. Air movement shall be directed away from the employee's breathing zone within the mini-enclosure.

3.6.5.4 Wrap and Cut Operation

Wrap and cut operations shall be as shown in SETUP DETAIL SHEET 9B and 10. Prior to cutting pipe, the asbestos-containing insulation shall be wrapped with polyethylene and securely sealed with duct tape to prevent asbestos becoming airborne as a result of the cutting process. The following steps shall be taken: install glovebag, strip back sections to be cut 6 inches from point of cut, and cut pipe into manageable sections.

3.6.6 NOT USED

3.6.7 NOT USED
3.6.8 NOT USED

3.6.9 NOT USED

3.6.10 Alternative Methods for Asphaltic Wrap

The Contractor shall use the following engineering controls and work practices when removingintact pipeline asphaltic wrap. Before work begins, and as needed during the job, the Designated Competent Person shall conduct an inspection and determine that the asphaltic wrap is intact and will likely remain intact. The material shall not be sanded, abraded, or ground. Manual methods which would render the material non-intact shall not be used. Removal or disturbance of pipeline asphaltic wrap shall be performed using wet methods.

3.6.11 Cleaning After Asbestos Removal

After completion of all asbestos removal work, surfaces from which ACM has been removed shall be wet wiped or sponged clean, or cleaned by some equivalent method to remove all visible residue. Run-off water shall be collected and filtered through a dual filtration system. A first filter shall be provided to remove fibers 20 micrometers and larger, and a final filter provided that removes fibers 5 micrometers and larger. After the gross amounts of asbestos have been removed from every surface, remaining visible accumulations of asbestos on floors shall be collected using plastic shovels, rubber squeegees, rubber dustpans, and HEPA vacuum cleaners as appropriate to maintain the integrity of the regulated area. When TSI and surfacing material has been removed, workmen shall use HEPA vacuum cleaners to vacuum every surface. Surfaces or locations which could harbor accumulations or residual asbestos dust shall be checked after vacuuming to verify that no asbestos-containing material remains; and shall be re-vacuumed as necessary to remove the ACM.

3.6.12 Class I Asbestos Work Response Action Detail Sheets

When the type and location of ACM is identified, the appropriate Class I Asbestos Work Response Action Detail Sheets will be attached. The following Class I ACM is assumed to be present:

a. Fireproofing or Thermal Surface Insulation: See Sheet 68

b. Pipe Insulation (Using a Glovebag): See Sheet 87

c. Pipe Insulation (Using a Mini-Containment Area): See Sheets 89 and 94
d. Duct Insulation: See Sheet 101.

e. Asbestos Flex Connector: See Sheet 104.

3.6.13 Class II Asbestos Work Response Action Detail Sheets

When the type and location of ACM is identified, the appropriate Class II Asbestos Work Response Action Detail Sheet will be attached.

a. Miscellaneous Asbestos-Containing Materials: See Sheet 45

3.7 FINAL CLEANING AND VISUAL INSPECTION

Upon completion of abatement, the regulated area shall be cleaned by collecting, packing, and storing all gross contamination; see SET-UP DETAIL SHEETS 9, 14 and 20. A final cleaning shall be performed using HEPA vacuum and wet cleaning of all exposed surfaces and objects in the regulated area. Upon completion of the cleaning, the Contractor shall conduct a visual pre-inspection of the cleaned area in preparation for a final inspection before final air clearance monitoring and recleaning, as necessary. Upon completion of the final cleaning, the Contractor and the Contracting Officer shall conduct a final visual inspection of the cleaned regulated area in accordance with ASTM E 1368 and document the results on the Final Cleaning and Visual Inspection as specified on the SET-UP DETAIL SHEET 19. If the Contracting Officer rejects the clean regulated area as not meeting final cleaning requirements, the Contractor shall reclean as necessary and have a follow-on inspection conducted with the Contracting Officer. Recleaning and follow-up reinspection shall be at the Contractor's expense.

3.8 NOT USED

3.9 EXPOSURE ASSESSMENT AND AIR MONITORING

3.9.1 General Requirements For Exposure

Exposure assessment, air monitoring and analysis of airborne concentration of asbestos fibers shall be performed in accordance with 29 CFR 1926, Section .1101, the Contractor's air monitoring plan, and as specified. Personal exposure air monitoring (collected at the breathing zone) that is representative of the exposure of each employee who is assigned to work within a regulated area shall be performed by the Contractor. Breathing zone samples shall be taken for at least 25 percent of the workers in each shift, or a minimum of 2, whichever is greater. Air monitoring results at the 95 percent confidence level shall be calculated as shown in Table 1 at the end of this section. Environmental air monitoring shall be performed for indoor regulated areas by the Contractor. Final clearance environmental air monitoring (where required), shall be performed or overseen by the Contractor's Designated IH. Environmental and final clearance air monitoring shall be performed using NIOSH Pub No. 84-100 Method 7400 (PCM) . For environmental and final clearance, air monitoring shall be conducted at a sufficient velocity and duration to establish the limit of detection of the method used at 0.005 f/cc. Monitoring may be duplicated by the Government at the discretion of the Contracting Officer. Results of breathing zone samples shall be posted at the job site and made available to the Contracting Officer. The Contractor shall maintain a fiber concentration inside a regulated area less than or equal to 0.1 f/cc expressed as an 8 hour, time-weighted average (TWA) during asbestos

abatement activities. If fiber concentration rises above 0.1 f/cc, work procedures shall be investigated with the Contracting Officer to determine the cause. At the discretion of the Contracting Officer, fiber concentration may exceed 0.1 f/cc but shall not exceed 1.0 f/cc expressed as an 8-hour TWA. The Contractor's workers shall not be exposed to an airborne fiber concentration in excess of 1.0 f/cc, as averaged over a sampling period of 30 minutes. Should either an environmental concentration of 1.0 f/cc expressed as an 8-hour TWA or a personal excursion concentration of 1.0 f/cc expressed as a 30-minute sample occur inside a regulated work area, the Contractor shall stop work immediately, notify the Contracting Officer, and implement additional engineering controls and work practice controls to reduce airborne fiber levels below prescribed limits in the work area. Work shall not restart until authorized by the Contracting Officer.

3.9.2 Initial Exposure Assessment

The Contractor shall conduct an exposure assessment immediately before or at the initiation of an asbestos abatement operation to ascertain expected exposures during that operation. The assessment shall be completed in time to comply with the requirements which are triggered by exposure data or the lack of a negative exposure assessment, and to provide information necessary to assure that all control systems planned are appropriate for that operation. The assessment shall take into consideration both the monitoring results and all observations, information or calculations which indicate employee exposure to asbestos, including any previous monitoring conducted in the workplace, or of the operations of the Contractor which indicate the levels of airborne asbestos likely to be encountered on the job. For Class I asbestos work, until the employer conducts exposure monitoring and documents that employees on that job will not be exposed in excess of PELs, or otherwise makes a negative exposure assessment, the Contractor shall presume that employees are exposed in excess of the PEL-TWA and PEL-Excursion Limit.

3.9.3 Negative Exposure Assessment

If the Contractor decides to use Negative Exposure Assessment, the following guidelines will be followed.

a. Objective Data: Objective data demonstrating that the product or material containing asbestos minerals or the activity involving such product or material cannot release airborne fibers in concentrations exceeding the PEL-TWA and PEL-Excursion Limit under those work conditions having the greatest potential for releasing asbestos.

b. Prior Asbestos Jobs: Where the Contractor has monitored prior asbestos jobs for the PEL and the PEL-Excursion Limit within 12 months of the current job, the monitoring and analysis were performed in compliance with asbestos standard in effect; the data were obtained during work operations conducted under workplace conditions closely resembling the processes, type of material, control methods, work practices, and environmental conditions used and prevailing in the Contractor's current operations; the operations were conducted by employees whose training and experience are no more extensive than that of employees performing the current job; and these data show that under the conditions prevailing and which will prevail in the current workplace, there is a high degree of certainty that the monitoring covered exposure

from employee exposures will not exceed the PEL-TWA and PEL-Excursion Limit.

c. Initial Exposure Monitoring: The results of initial exposure monitoring of the current job, made from breathing zone air samples that are representative of the 8-hour PEL-TWA and 30-minute short-term exposures of each employee. The monitoring covered exposure from operations which are most likely during the performance of the entire asbestos job to result in exposures over the PELs.

3.9.4 NOT USED

3.9.5 Preabatement Environmental Air Monitoring

For indoor regulated areas, preabatement environmental air monitoring shall be established 1 day prior to the masking and sealing operations for each regulated area to determine background concentrations before abatement work begins. Preabatement air samples shall be collected using NIOSH Pub No. 84-100 Method 7400, PCM. The Contractor shall propose the number and location of samples in the Asbestos Hazard Abatement Plan.

3.9.6 Environmental Air Monitoring During Abatement

Unless or until the Contractor can provide an exposure assessment that demonstrates that the product or material containing asbestos minerals, or the abatement involving such product or material, cannot release airborne asbestos fibers in concentrations exceeding 0.01 f/cc as a TWA under those work conditions having the greatest potential for releasing asbestos, environmental air monitoring shall be conducted at locations and frequencies that will accurately characterize any evolving airborne asbestos fiber concentrations for indoor regulated areas. Environmental air monitoring may be discontinued only if all environmental air monitoring samples, including those inside the regulated area, do not exceed 0.01 f/cc as a TWA. The Contractor shall propose number and location of sampling in the Asbestos Hazard Abatement Plan. If the sampling outside regulated area shows airborne fiber levels have exceeded background or 0.01 f/cc, whichever is greater, work shall be stopped immediately, and the Contracting Officer notified. The condition causing the increase shall be corrected. Work shall not restart until authorized by the Contracting Officer.

3.9.7 Final Clearance Air Monitoring

Final clearance monitoring shall be conducted for indoor regulated areas in accordance with State regulations. Prior to conducting final clearance air monitoring, the Contractor and the Contracting Officer shall conduct a final visual inspection of the regulated area where asbestos abatement has been completed. The final visual inspection shall be as specified in SET-UP DETAIL SHEET 19. Final clearance air monitoring shall not begin until acceptance of the Contractor's final cleaning by the Contracting Officer. The Contractor's Designated IH shall conduct final clearance air monitoring using aggressive air sampling techniques as defined in EPA 560/5-85-024 or as otherwise required by federal or state requirements. The sampling and analytical method used will be NIOSH Pub No. 84-100Method 7400 (PCM) and Table 2.

3.9.7.1 Final Clearance Requirements, NIOSH PCM Method

For PCM sampling and analysis using NIOSH Pub No. 84-100 Method 7400, the fiber concentration inside the abated regulated area, for each airborne sample, shall be less than 0.01 f/cc. The abatement inside the regulated area is considered complete when every PCM final clearance sample is below the clearance limit. If any sample result is greater than 0.01 total f/cc, the asbestos fiber concentration (asbestos f/cc) may be confirmed from that same filter using NIOSH Pub No. 84-100 Method 7402 (TEM) at Contractor's expense. If any confirmation sample result is greater than 0.01 asbestos f/cc, abatement is incomplete and cleaning shall be repeated. Upon completion of any required recleaning, resampling with results to meet the above clearance criteria shall be done.

3.9.7.2 NOT USED

3.9.7.3 Air Clearance Failure

If clearance sampling results fail to meet the final clearance requirements, the Contractor shall pay all costs associated with the required recleaning, resampling, and analysis, until final clearance requirements are met.

3.9.8 Air-Monitoring Results and Documentation

Air sample fiber counting shall be completed and results provided within 24 hours (breathing zone samples), and 24 hours (environmental/clearance monitoring) after completion of a sampling period. The Contracting Officer shall be notified immediately of any airborne levels of asbestos fibers in excess of established requirements. Written sampling results shall be provided within 5 working days of the date of collection. The written results shall be signed by testing laboratory analyst, testing laboratory principal and the Contractor's Designated IH. The air sampling results shall be documented on a Contractor's daily air monitoring log. The daily air monitoring log shall contain the following information for each sample:

a. Sampling and analytical method used;

b. Date sample collected;

c. Sample number;

d. Sample type: BZ = Breathing Zone (Personal), P = Preabatement, E = Environmental, C = Abatement Clearance;

e. Location/activity/name where sample collected;

f. Sampling pump manufacturer, model and serial number, beginning flow rate, end flow rate, average flow rate (L/min);

g. Calibration date, time, method, location, name of calibrator, signature;

h. Sample period (start time, stop time, elapsed time (minutes);

i. Total air volume sampled (liters);

j. Sample results (f/cc and S/mm square) if EPA methods are required for final clearance;

k. Laboratory name, location, analytical method, analyst, confidence level. In addition, the printed name and a signature and date block for the Industrial Hygienist who conducted the sampling and for the Industrial Hygienist who reviewed the daily air monitoring log verifying the accuracy of the information.

## 3.10 CLEARANCE CERTIFICATION

When asbestos abatement is complete, ACM waste is removed from the regulated areas, and final clean-up is completed, the Contracting Officer will certify the areas as safe before allowing the warning signs and boundary warning tape to be removed. The Contractor and the Contracting Officer shall visually inspect all surfaces within the containment for residual material or accumulated debris. The Contractor shall reclean all areas showing dust or residual materials. The Contracting Officer will certify in writing that the area is safe before unrestricted entry is permitted. The Government will have the option to perform monitoring to certify the areas are safe before entry is permitted.

## 3.11 CLEANUP AND DISPOSAL

### 3.11.1 Title to ACM Materials

ACM material resulting from abatement work, except as specified otherwise, shall become the property of the Contractor and shall be disposed of as specified and in accordance with applicable federal, state and local regulations.

### 3.11.2 Collection and Disposal of Asbestos

All ACM waste, including contaminated wastewater filters, scrap, debris, bags, containers, equipment, and asbestos contaminated clothing, shall be collected and placed in leak-tight containers such as double plastic bags (see DETAIL SHEET 9A); sealed double wrapped polyethylene sheet (see DETAIL 9B); sealed fiberboard boxes (see DETAIL SHEET 9C); or other approved containers. Waste within the containers shall be wetted in case the container is breeched. Asbestos-containing waste shall be disposed of at an EPA, state and local approved asbestos landfill. For temporary storage, sealed impermeable containers shall be stored in an asbestos waste load-out unit or in a storage/transportation conveyance (i.e., dumpster, roll-off waste boxes, etc.) in a manner acceptable to and in an area assigned by the Contracting Officer. Procedure for hauling and disposal shall comply with 40 CFR 61, Subpart M, state, regional, and local standards.

### 3.11.3 NOT USED

### 3.11.4 Weigh Bill and Delivery Tickets

Copies of weigh bills and delivery tickets shall be submitted to the Contracting Officer during the progress of the work. The Contractor shall furnish the Contracting Officer scale tickets for each load of ACM weighed and certified. These tickets shall include tare weight; identification mark for each vehicle weighed; and date, time and location of loading and unloading. Tickets shall be furnished at the point and time individual trucks arrive at the worksite. A master log of all vehicle loading shall be furnished for each day of loading operations. Before the final statement is allowed, the Contractor shall file with the Contracting Officer certified weigh bills and/or certified tickets and manifests of all

ACM actually disposed by the Contractor for this contract.

3.11.5 Asbestos Waste Shipment Record

The Contractor shall complete and provide the Contracting Officer final completed copies of the Waste Shipment Record for all shipments of waste material as specified in 40 CFR 61, Subpart M and other required state waste manifest shipment records, within 3 days of delivery to the landfill. Each Waste Shipment Record shall be reviewed by 43 CES/CEVC signed and dated by the Contractor, the waste transporter and disposal facility operator.

TABLE 1

FORMULA FOR CALCULATION OF THE 95 PERCENT CONFIDENCE LEVEL
(Reference: NIOSH 7400)

---

Fibers/cc(01.95 percent CL) = X + ((X) * (1.645) * (CV))

Where: X = ((E)(AC))/((V)(1000))

E = ((F/Nf) - (B/Nb))/Af

CV = The precision value; 0.45 shall be used unless the analytical laboratory provides the Contracting Officer with documentation (Round Robin Program participation and results) that the laboratory's precision is better.

AC = Effective collection area of the filter in square millimeters

V = Air volume sampled in liters

E = Fiber density on the filter in fibers per square millimeter

F/Nf = Total fiber count per graticule field

B/Nb = Mean field blank count per graticule field

Af = Graticule field area in square millimeters

TWA = C1/T1 + C2/T2 = Cn/Tn

Where: C = Concentration of contaminant

T = Time sampled.

TABLE 2

NI0SH METHOD 7400

PCM ENVIRONMENTAL AIR SAMPLING PROTOCOL (NON-PERSONAL)

| Sample Location | Minimum No. of Samples | Filter Pore Size (Note 1) | Min. Vol. (Note 2) (Liters) | Sampling Rate (liters/min.) |
|---|---|---|---|---|
| Inside Abatement Area | 0.5/140 Square Meters (Notes 3 & 4) | 0.45 microns | 3850 | 2-16 |
| Each Room in 1 Abatement Area Less than 140 Square meters | | 0.45 microns | 3850 | 2-16 |
| Field Blank | 2 | 0.45 microns | 0 | 0 |
| Laboratory Blank | 1 | 0.45 microns | 0 | 0 |

Notes:

1. Type of filter is Mixed Cellulose Ester.

2. Ensure detection limit for PCM analysis is established at 0.005 fibers/cc.

3. One sample shall be added for each additional 140 square meters. (The corresponding I-P units are 5/1500 square feet).

4. A minimum of 5 samples are to be taken per abatement area, plus 2 field blanks.

TABLE 4

EPA AHERA METHOD: TEM AIR SAMPLING PROTOCOL

| Location Sampled | Minimum No. of Samples | Filter Pore Size | Min. Vol. (Liters) | Sampling Rate (liters/min.) |
|---|---|---|---|---|
| Inside Abatement Area | 5 | 0.45 microns | 1500 | 2-16 |
| Outside Abatement Area | 5 | 0.45 microns | 1500 | 2-16 |
| Field Blank | 2 | 0.45 microns | 0 | 0 |
| Laboratory Blank | 1 | 0.45 microns | 0 | 0 |

Notes:

1. Type of filter is Mixed Cellulose Ester.

2. The detection limit for TEM analysis is 70 structures/square mm.

CERTIFICATE OF WORKER'S ACKNOWLEDGMENT

PROJECT NAME _____ CONTRACT NO. _____
PROJECT ADDRESS _____
CONTRACTOR FIRM NAME _____
EMPLOYEE'S NAME _____,_____,_____,
(Print) (Last) (First) (MI)

Social Security Number: _____-_____-_____,

WORKING WITH ASBESTOS CAN BE DANGEROUS. INHALING ASBESTOS FIBERS HAS BEEN LINKED WITH TYPES OF LUNG DISEASE AND CANCER. IF YOU SMOKE AND INHALE ASBESTOS FIBERS, THE CHANCE THAT YOU WILL DEVELOP LUNG CANCER IS GREATER THAN THAT OF THE NONSMOKING PUBLIC.

Your employer's contract for the above project requires that you be provided and you complete formal asbestos training specific to the type of work you will perform and project specific training; that you be supplied with proper personal protective equipment including a respirator, that you be trained in its use; and that you receive a medical examination to evaluate your physical capacity to perform your assigned work tasks, under the environmental conditions expected, while wearing the required personal protective equipment. These things are to be done at no cost to you. By signing this certification, you are acknowledging that your employer has met these obligations to you. The Contractor's Designated Industrial Hygienist will check the block(s) for the type of formal training you have completed. Review the checked blocks prior to signing this certification.

FORMAL TRAINING:
_____ a. For Competent Persons and Supervisors: I have completed EPA's Model Accreditation Program (MAP) training course, "Contractor/Supervisor", that meets this State's requirements.

b. For Workers:
_____ (1) For OSHA Class I work: I have completed EPA's MAP training course, "Worker", that meets this State's requirements.
_____ (2) For OSHA Class II work (where there will be abatement of more than one type of Class II materials, i.e., roofing, siding, floor tile, etc.): I have completed EPA's MAP training course, "Worker", that meets this State's requirements.
(3) For OSHA Class II work (there will only be abatement of one type of Class II material):
_____ (a) I have completed an 8-hour training class on the elements of 29 CFR 1926, Section .1101(k)(9)(viii), in addition to the specific work practices and engineering controls of 29 CFR 1926, Section .1101(g) and hands-on training.
_____ (b) I have completed EPA's MAP training course, "Worker", that meets this State's requirements.
_____ (4) For OSHA Class III work: I have completed at least a 16-hour course consistent with EPA requirements for training of local education agency maintenance and custodial staff at 40 CFR 763, Section .92(a)(2) and the elements of 29 CFR 1926, Section .1101(k)(9)(viii), in addition to the specific work practices and engineering controls at 29 CFR 1926, Section .1101, and hands-on training.

CERTIFICATE OF WORKER'S ACKNOWLEDGMENT

_____ (5) For OSHA Class IV work: I have completed at least a 2-hr course consistent with EPA requirements for training of local education agency maintenance and custodial staff at 40 CFR 763, (a)(1), and the elements of 29 CFR 1926, Section .1101(k)(9)(viii), in addition to the specific work practices and engineering controls at 29 CFR 1926, Section .1101(g) and hands-on training.

_____ c. Workers, Supervisors and the Designated Competent Person: I have completed annual refresher training as required by EPA's MAP that meets this State's requirements.

PROJECT SPECIFIC TRAINING:
_____ I have been provided and have completed the project specific training required by this Contract. My employer's Designated Industrial Hygienist and Designated Competent Person conducted the training.

RESPIRATORY PROTECTION:
_____ I have been trained in accordance with the criteria in the Contractor's Respiratory Protection program. I have been trained in the dangers of handling and breathing asbestos dust and in the proper work procedures and use and limitations of the respirator(s) I will wear. I have been trained in and will abide by the facial hair and contact lens use policy of my employer.

RESPIRATOR FIT-TEST TRAINING:
_____ I have been trained in the proper selection, fit, use, care, cleaning,maintenance, and storage of the respirator(s) that I will wear. I have been fit-tested in accordance with the criteria in the Contractor's Respiratory Program and have received a satisfactory fit. I have been assigned my individual respirator. I have been taught how to properly perform positive and negative pressure fit-check upon donning negative pressure respirators each time.

MEDICAL EXAMINATION:
_____ I have had a medical examination within the last twelve months which was paid for by my employer. The examination included: health history, pulmonary function tests, and may have included an evaluation of a chest x-ray. A physician made a determination regarding my physical capacity to perform work tasks on the project while wearing personal protective equipment including a respirator. I was personally provided a copy and informed of the results of that examination. My employer's Industrial Hygienist evaluated the medical certification provided by the physician and checked the appropriate blank below. The physician determined that there:

_____ were no limitations to performing the required work tasks.
_____ were identified physical limitations to performing the required work tasks.

Date of the medical examination _____

Employee Signature _____ date _____
Contractor's Industrial
Hygienist Signature _____ date _____

-- End of Section --

# Part 2, Setup Details

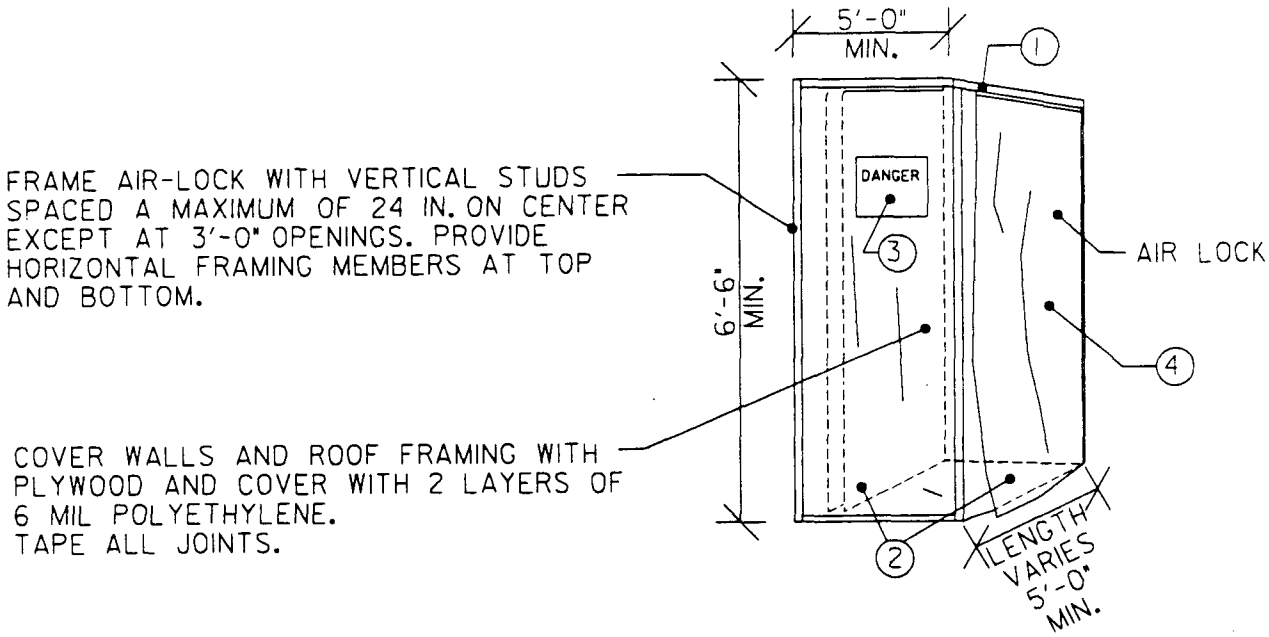


## Air lock

1. Establish work area so that unauthorized entry is prevented; see sheet 11. Construct a wood frame. Install one layer of 6-mil polyethylene sheeting to structural members and two layers to the floor. Seal all edges of sheeting to wall, ceiling, and floor surfaces with duct tape.

2. Install triple flaps of 6-mil polyethylene sheeting at both doorways.

3. Install danger signs on each side of air lock area; see sheet 11.

4. Before leaving work area, remove outer suit. Place in a plastic bag; see sheet 9.

5. Enter air lock. Wet wipe respirator and wash hands with clean water from portable sprayer. Remove respirator, and place in a clean plastic bag. Proceed to shower, where inner suit may be removed.

**Final clearance requirements.** After abatement is completed, prepare area for final clearance. Contractor and Contracting Officer will certify visual inspection of work area on sheet 19, *Certification of Final Cleaning and Visual Inspection.* Contract designee(s) will conduct final air-clearance monitoring as required by the contract. Remove containment area upon instructions from the Contracting Officer, and treat as asbestos-contaminated material; see sheets 9 and 14.

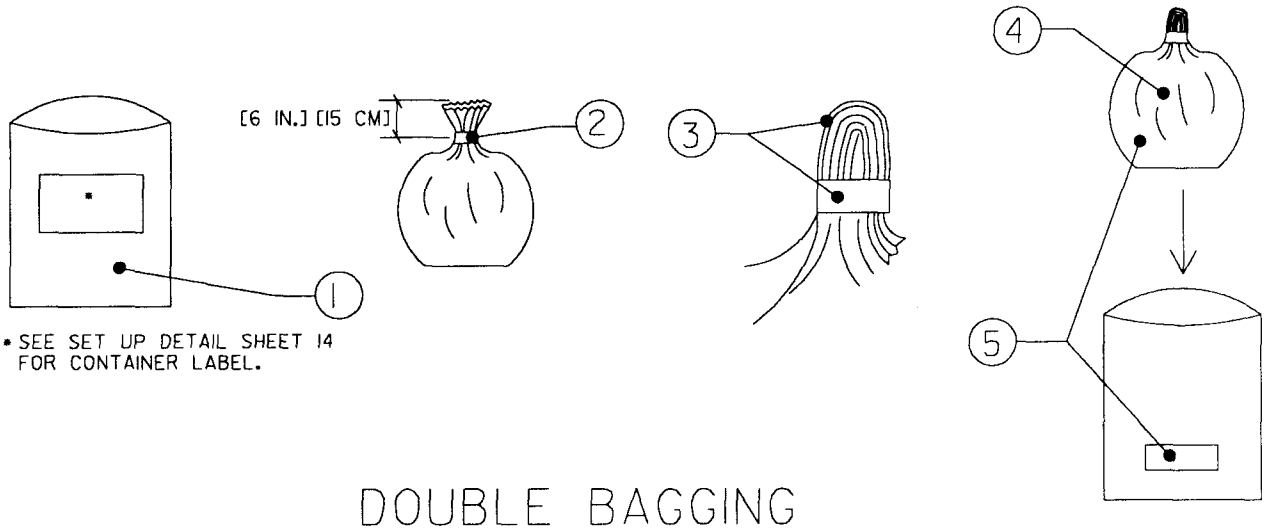


DOUBLE BAGGING

## Containers—double bagging

1. Place the still-wet asbestos-containing and asbestos-contaminated material into a prelabled 6-mil polyethylene bag. Do not overfill. Do not use bag for asbestos-containing or asbestos-contaminated material that could puncture the bag. (See sheet 9C for packaging items that could puncture bags.)

2. Evacuate with HEPA vacuum, and seal collapsed bag by twisting top [6 in] [15 cm] closed and wrapping with a minimum of two layers of duct tape.

3. Twist top and fold over. Apply second wrap of duct tape.

4. Adequately wet clean outside of disposal bag by wet wiping, and take bag to the equipment and staging area.

5. Place bag inside a second prelabled 6-mil polyethylene bag.

6. Seal outer bag by repeating steps 2 and 3 above. Take bag to load-out unit; see sheet 20.

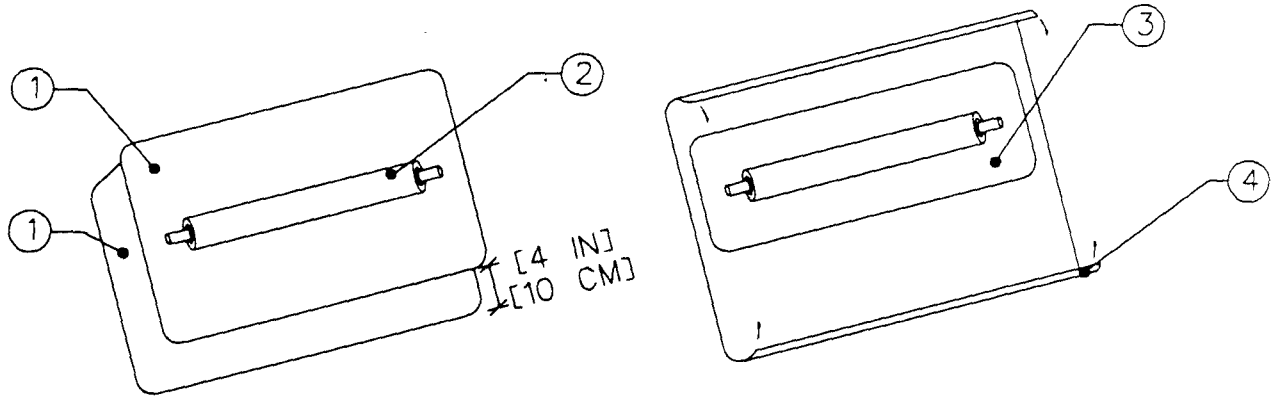


## Containers—leak-tight wrapping

1. Place two layers of 6-mil polyethylene sheet on surface so that the bottom layer is offset [4 in] [10 cm] from the top layer.

2. Place the still-wet asbestos-containing or asbestos-contaminated material that is too large (boiler, vessel, pipe segment, etc.) to be placed in disposal bags on the top layer of polyethylene.

3. Wrap the top layer tightly around the contaminated material. Seal all edges of the top layer of sheeting with duct tape. Apply labels; see sheet 14.

4. Repeat procedure with bottom layer, including labeling. Take to load-out unit; see sheet 20.

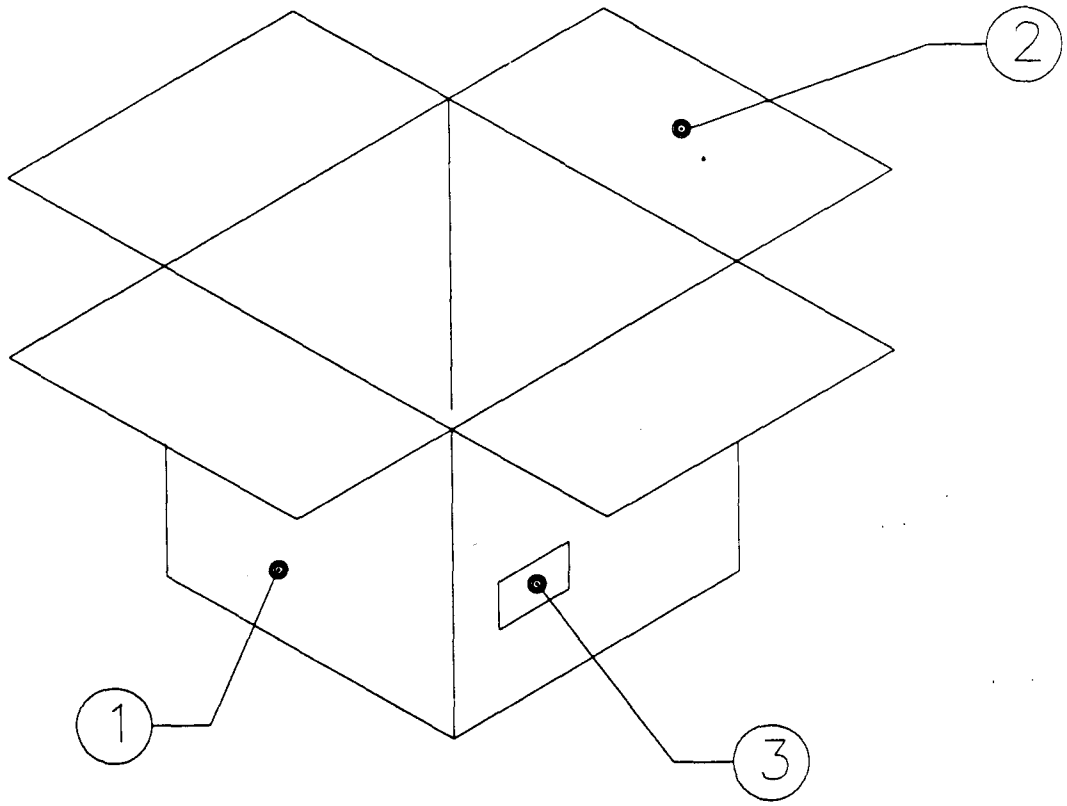


## Containers—corrugated cardboard boxes

1. Place still-wet asbestos-containing or asbestos-contaminated material that could puncture disposal bags into heavy-duty corrugated cardboard boxes coated with plastic or wax that will retard deterioration from moisture.

2. Close flaps, and seal with duct tape.

3. Apply labels; see sheet 14. Place box into disposal bags; see sheet 9A. Take to load-out unit; see sheet 20.

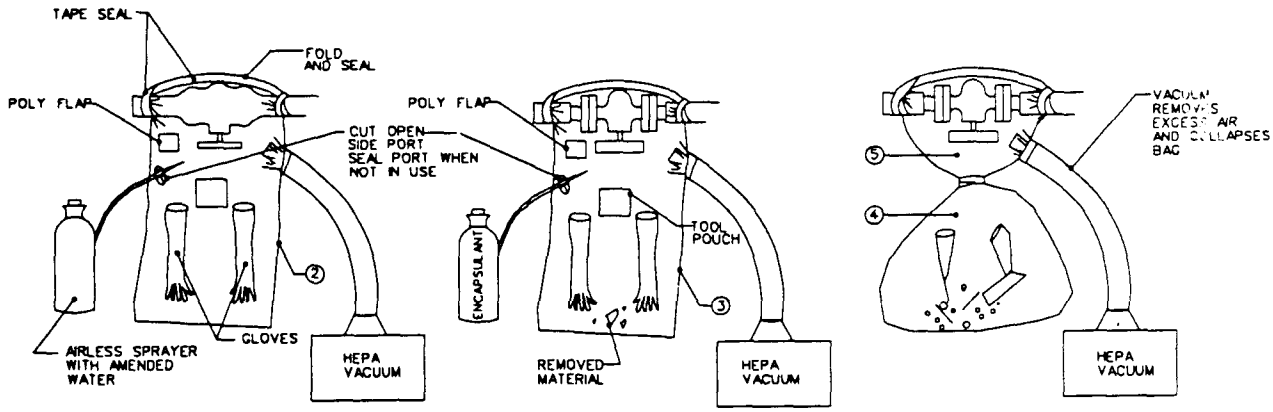


## Glove bag

1. Construct modified containment area in accordance with sheet 21. NOTE: Inspect for structural integrity the insulation material adjacent to section being removed, since glove bag removal procedure is not appropriate if it will cause asbestos fiber release from adjacent asbestos-containing material.

2. Put tools and rags inside glove bag. Insulation adjacent to the asbestos-containing material being removed must be adequately wet cleaned and sprayed with an encapsulant before placing glove bag over the area to be removed. Install glove bag according to manufacturer's instructions. (NOTE: Negative-air glove bags may be used if first approved by Contracting Officer. Manufacturer procedures for negative-air glove bags will vary from procedures identified on this sheet.) Install HEPA filter vacuum cleaner with hose ducted into bag. Seal with duct tape. Smoke test for leaks. Soak insulation with amended water.

3. Remove insulation and clean exposed metal surfaces. Encapsulate exposed ends of insulation and metal surfaces. Adequately wet clean glove bag surfaces to below tool pouch.

4. Grasp tools in pouch and withdraw by pulling glove inside out. Twist glove above encased tools to create a constriction, and tape constricted area with duct tape. Cut through middle of taped area so that tools and glove bag will both remain sealed. Place encased tools into tool pouch of next glove bag or decontaminate by water immersion.

5. Evacuate glove bag, using HEPA vacuum. Twist bag to create a constriction below tool pouch. Wrap constricted area with duct tape. Cut bag [4 in] [10 cm] above constriction. Double bag cut off portion of bag; see sheet 9. Apply labels; see sheet 14. Cap and seal end of HEPA vacuum hose in order to prevent incidental fiber release.

6. Remove remaining portion of glove bag. Place in approved container; see sheet 9. Apply labels; see sheet 14. Dispose as asbestos-contaminated waste.

**Final clearance requirements.** For final clearance, Contractor and Contracting Officer will certify visual inspection of work area on sheet 19, *Certification of Final Cleaning and Visual Inspection*. Contract designee(s) will conduct final air-clearance monitoring as required by the contract.

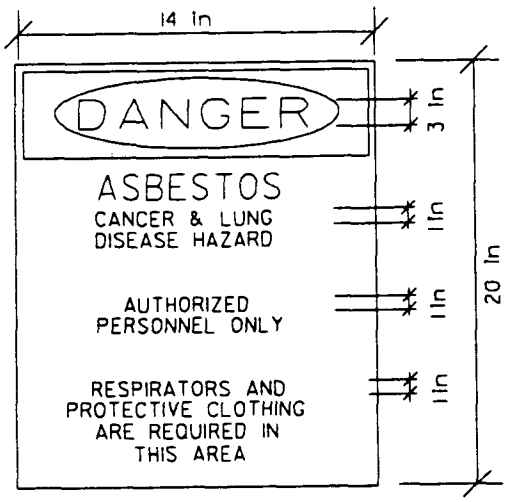


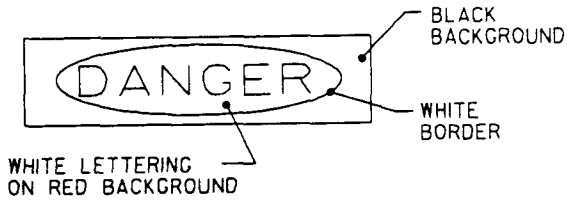


AREA WARNING SIGNS AND WARNING TAPE

DETAIL 011

## Area warning signs and warning tape

1. Provide and install [4 mil] [0.10 mm] polyethylene warning tape at locations shown on the abatement area plan.

2. Warning tape is to be attached to wood or metal posts at [10 ft] [300 cm] on center. Tape must be [3 ft] [100 cm] from ground.

3. Attach both warning signs at each entrance of the work area and at [33 yd] [30 m] on center where security fencing is installed.

4. Warning signs must be in English and other languages required by the contract.

5. Install at eye level.

| FIBER CONCENTRATION | MINIMUM REQUIRED RESPIRATOR | |
|---|---|---|
| NOT IN EXCESS OF 1 FIBER/CC | HALF-MASK AIR PURIFYING RESPIRATOR WITH HEPA FILTERS | |
| NOT IN EXCESS OF 5 FIBERS/CC | FULL FACEPIECE AIR-PURIFYING RESPIRATOR WITH HEPA FILTERS | |
| NOT IN EXCESS OF 10 FIBERS/CC | LOOSE FITTING HELMET OR HOOD, POWERED AIR-PURIFYING RESPIRATOR WITH HEPA FILTERS | |
| NOT IN EXCESS OF 10 FIBERS/CC | POWERED AIR-PURIFYING RESPIRATOR WITH FULL FACEPIECE AND HEPA FILTER | |
| NOT IN EXCESS OF 10 FIBERS/CC | LOOSE FITTING HELMET OR HOOD, SUPPLIED AIR RESPIRATOR OPERATED IN CONTINUOUS FLOW MODE WITH BACK-UP HEPA FILTER | |
| NOT IN EXCESS OF 10 FIBERS/CC | SUPPLIED AIR RESPIRATOR WITH FULL FACEPIECE OPERATED IN CONTINUOUS FLOW MODE WITH BACK-UP HEPA FILTER | |
| NOT IN EXCESS OF 100 FIBERS/CC | FULL FACEPIECE SUPPLIED AIR RESPIRATOR OPERATED IN PRESSURE-DEMAND MODE WITH BACK-UP HEPA FILTER | |
| GREATER THAN 100 FIBERS/CC OR UNKNOWN CONCENTRATION | FULL FACEPIECE SUPPLIED-AIR RESPIRATOR OPERATED IN PRESSURE-DEMAND MODE WITH AUXILIARY POSITIVE-PRESSURE SELF-CONTAINED BREATHING APPARATUS | |

**Respiratory protection table**

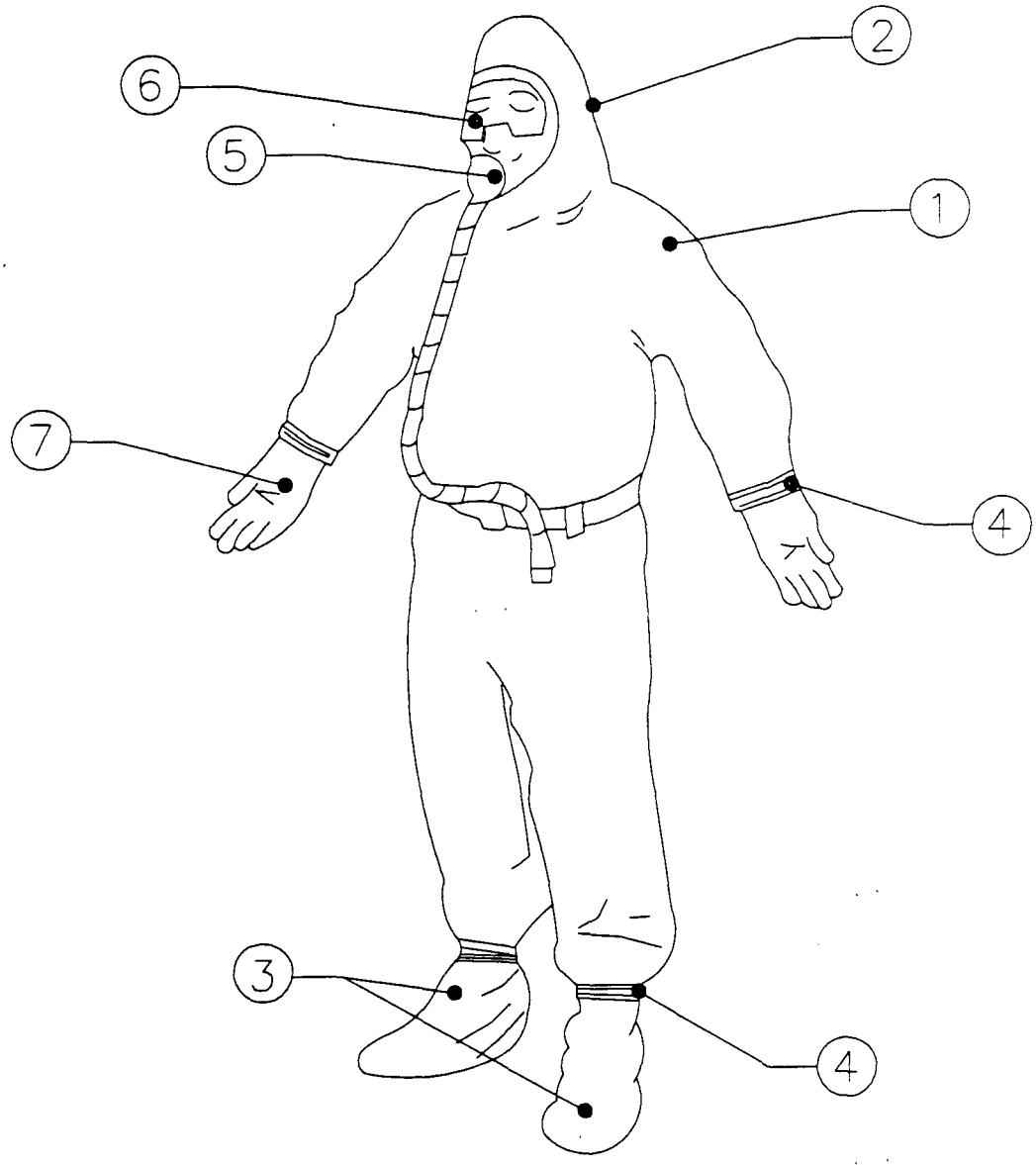


## Protective clothing

1. Disposable or reusable full body suit with elastic around hood and shoe cover openings is required or as otherwise specified in the contract.

2. Hood shall be worn over respirator's head and neck straps.

3. Shoe covers shall be worn over work shoes.

4. Cuffs shall be taped with duct tape at wrists and ankles in order to prevent infiltration.

5. Cartridge-type air-purifying HEPA filter respirator is minimal requirement. Type shall be selected in accordance with sheet 12.

6. If eye protection is not integral with respirator, protection goggles are required.

7. Rubber work gloves are recommended to be worn alone or under outer work gloves provided for hand and operation safety.

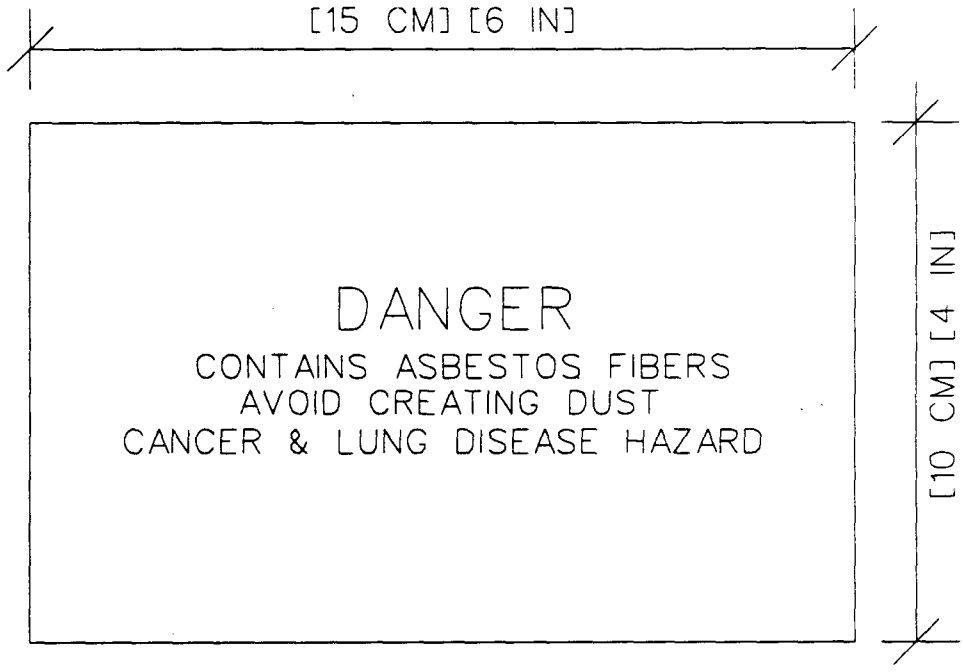


**Disposal container label**

Attach warning labels to each disposal container removed from abatement area.

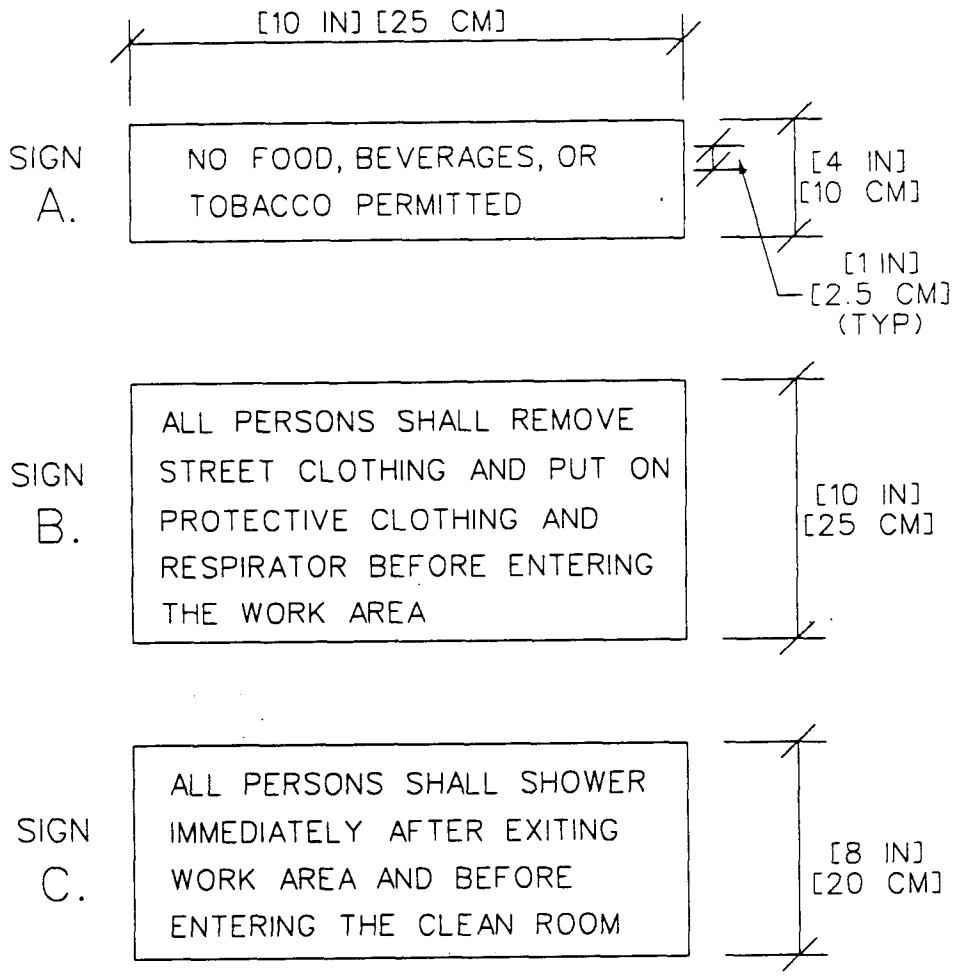


**Decontamination unit signage**

1. Provide signs in English and other languages required by the contract.

2. Install at eye level.

## Certification of Final Cleaning And Visual Inspection

Individual abatement task as identified in paragraph, Description of Work _____

In accordance with the cleaning and decontamination procedures specified in the Contractor's asbestos hazard abatement plan and this contract, the Contractor hereby certifies that he/she has thoroughly visually inspected the decontaminated regulated work area (all surfaces, including pipes, beams, ledges, walls, ceiling, floor, decontamination unit, etc.) in accordance with ASTM E1368, *Standard Practice for Visual Inspection of Asbestos Abatement Projects*, and has found no dust, debris, or asbestos-containing material residue.

BY: (Contractor's signature) _____ Date _____

Print name and title _____

(Contractor's Onsite Supervisor signature) _____ Date _____

Print name and title _____

(Contractor's Industrial Hygienist signature) _____ Date _____

Print name and title _____

### Contracting Officer Acceptance or Rejection

The Contracting Officer hereby determines that the Contractor has performed final cleaning and visual inspection of the decontaminated regulated work area (all surfaces including pipes, beams, ledges, walls, ceiling, floor, decontamination unit, etc.) and by quality assurance inspection, finds the Contractor's final cleaning to be:

☐ Acceptable

☐ Unacceptable, Contractor instructed to reclean the regulated work area.

BY: Contracting Officer's Representative

Signature _____ Date _____

Print name and title _____

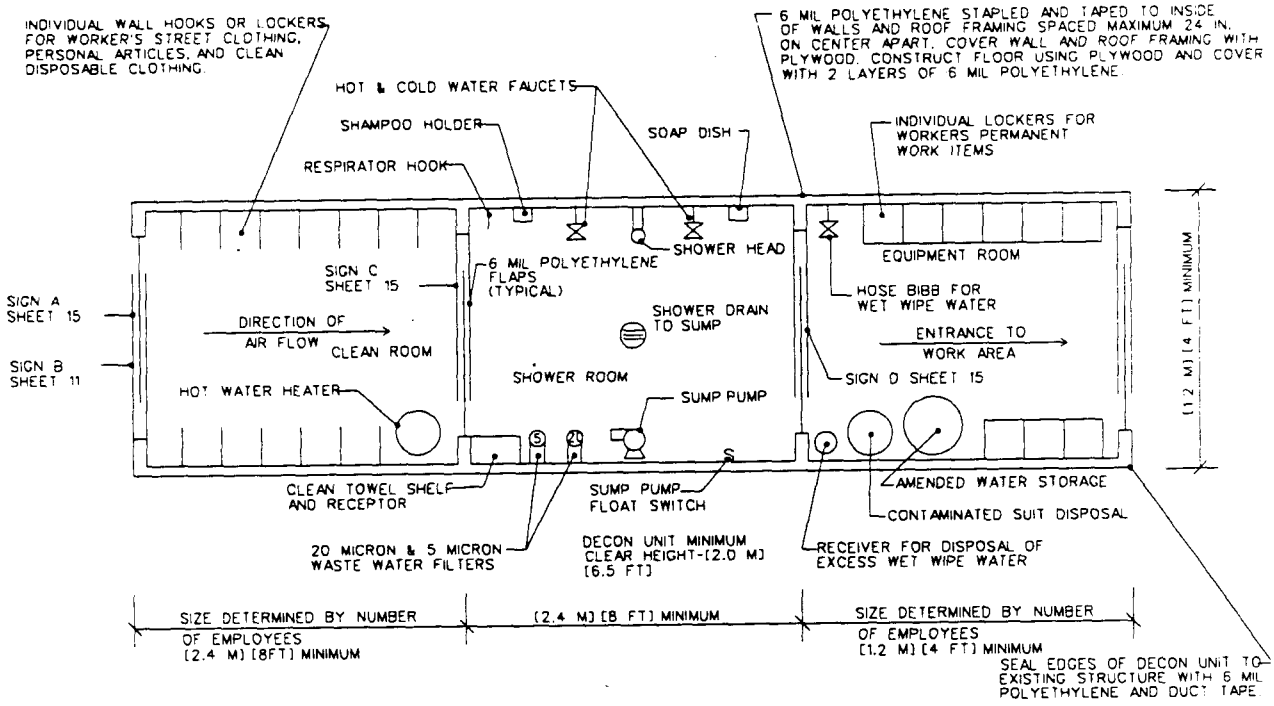


## Decontamination unit floor plan

1. Establish work area so that unauthorized entry is prevented; see sheets 11 and 15. Before entering the work area, all personnel shall remove their street clothing in the clean room and put on protective clothing and respirator.

2. Whenever exiting the work area, all personnel shall:

- Vacuum clothing and shoes outside equipment room.
- Remove all clothing and equipment (except respirator) in equipment room.
- Store work shoes and equipment in locker.
- With respirator still on, shower thoroughly, including hair. Then remove respirator and finish shower.
- Proceed to clean room and put on street clothes.

3. See sheet 23 for minimum plumbing requirements, including wastewater filtration. Ensure that plumbing and specified filter size meet local requirements.

4. Twice daily, or more often if necessary, and before breaking down decontamination unit after abatement, adequately wet clean and HEPA vacuum all wall, floor, equipment, and other surfaces. Waste collected in shower room and equipment room shall be treated as asbestos-contaminated material. Place in approved container; see sheet 9. Apply labels; see sheet 14.

5. Prepare for final clearance.

**Final clearance requirements.** Contractor and Contracting Officer will certify visual inspection of work area on sheet 19, *Certification of Final Cleaning and Visual Inspection.* Contract designee(s) will conduct final air-clearance monitoring as required by the contract. If the unit is not a prefabricated decontamination unit, apply lockdown encapsulant before final air-clearance monitoring. After approval of final air clearance, break down and treat polyethylene as asbestos-contaminated material. Place in approved container; see sheet 9. Apply labels; see sheet 14. Dispose of as required by the contract.

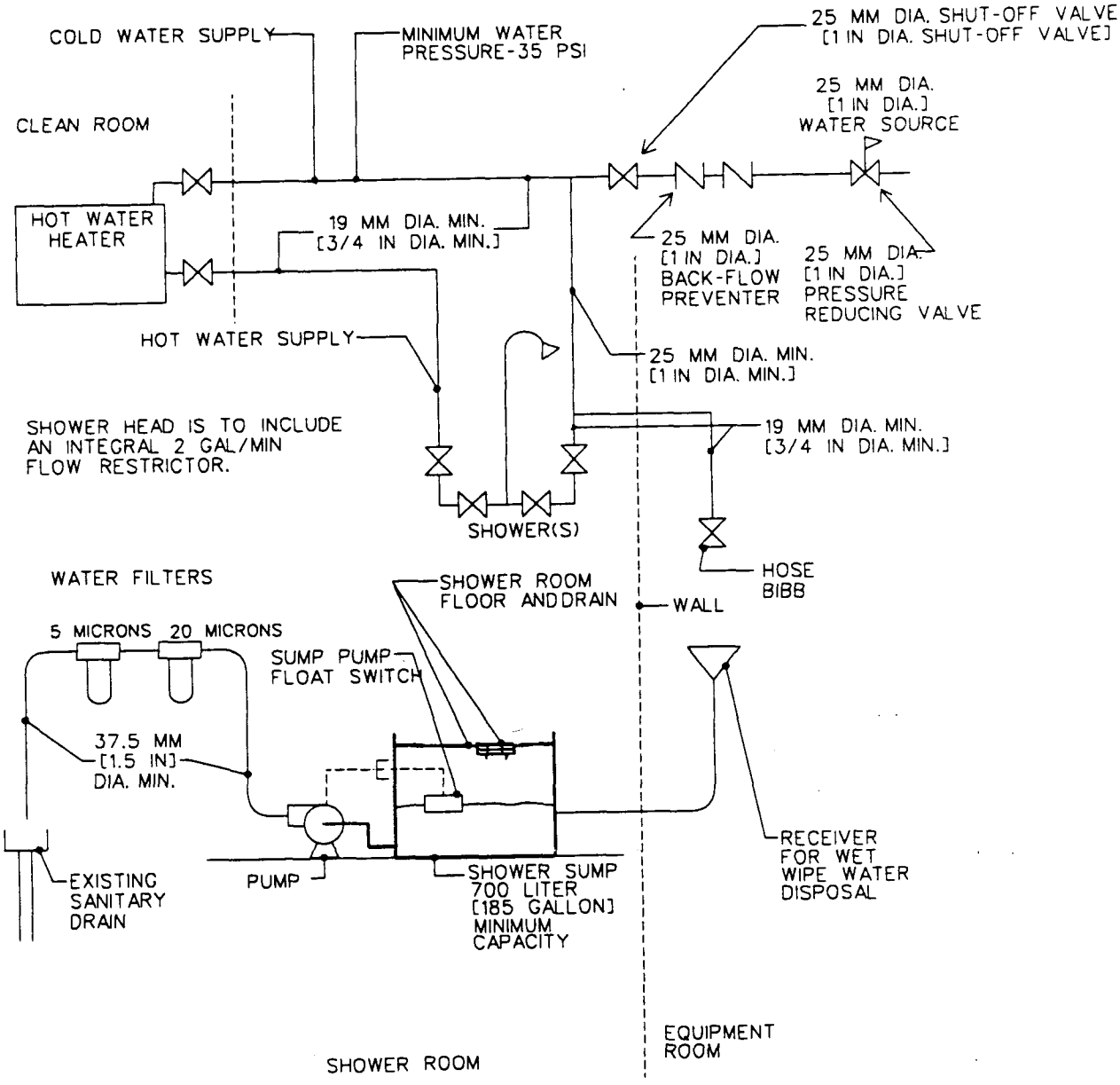


SIZE CAPACITY OF SUMP PUMP FOR TWICE THE EXPECTED WASTE WATER FLOW.

**Decontamination unit piping details**

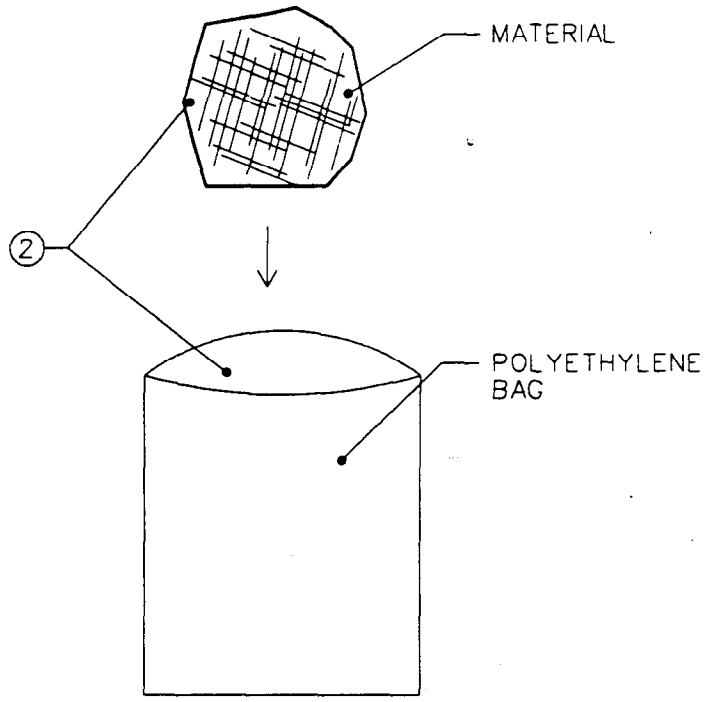


## Removal of miscellaneous asbestos-containing materials

1. Establish work area so that unauthorized entry is prevented; see sheet 11. Prepare containment area as specified on sheet 21.

2. Adequately wet mist materials with amended water. Remove and place in approved container; see sheet 9. Apply labels; see sheet 14.

3. HEPA vacuum and wet wipe area in the immediate vicinity of removed materials.

4. Prepare area for final clearance.

5. Carry out final clearance requirements as specified on sheet 21.

NOTE: THIS SHEET CAN BE USED FOR PIPE FITTINGS AND FOR VERTICAL OR HORIZONTAL PIPING.

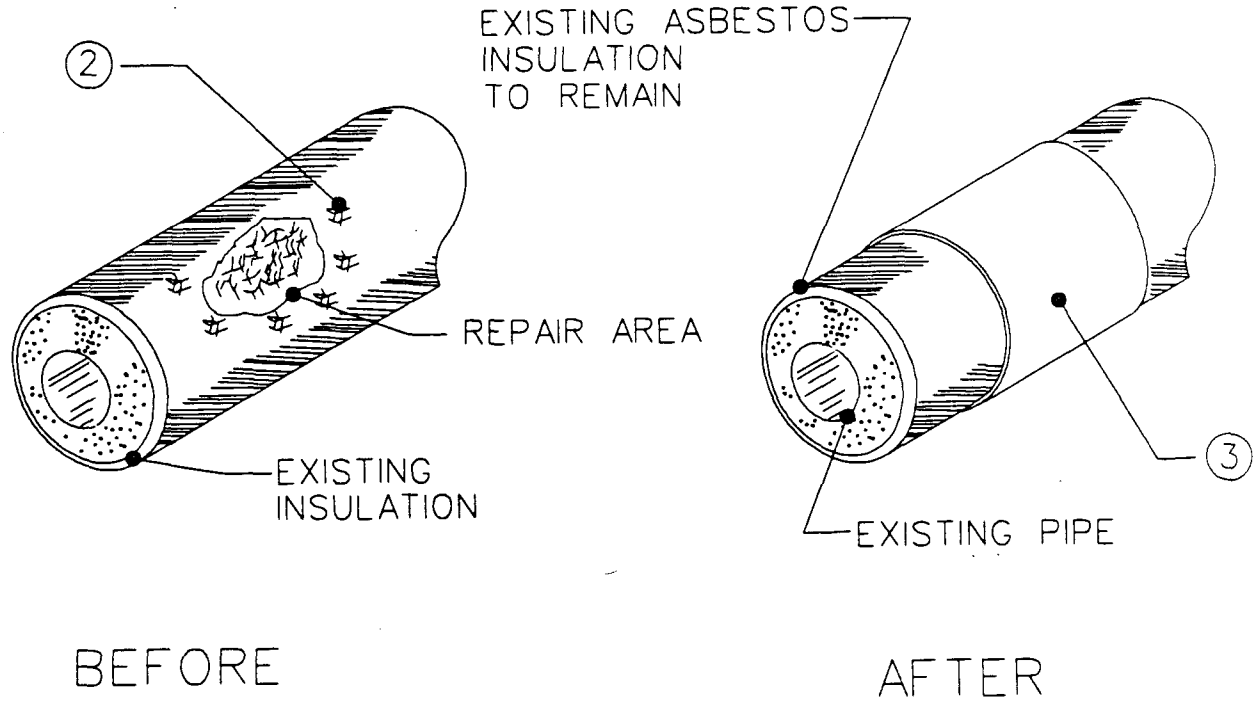


## Repair of pipe and fitting insulation (using glove bag)

1. Install glove bag as specified on sheet 10. Prepare modified containment area as specified on sheet 21. Adequately wet mist insulation surface with amended water.

2. Remove any loose material in the repair area with a HEPA vacuum. Fill voids with mineral wool insulating cement.

3. Cover filled areas with a nonwoven fiberglass cloth saturated with a bridging encapsulant. Extend cloth a minimum of 6 inches beyond edge of damaged areas. Allow area to dry for 24 hours. Coat area with a second layer of tinted bridging encapsulant.

4. Inspect and reapply encapsulant as necessary.

5. Prepare area for final clearance.

6. Carry out final clearance requirements specified on sheets 10 and 21.

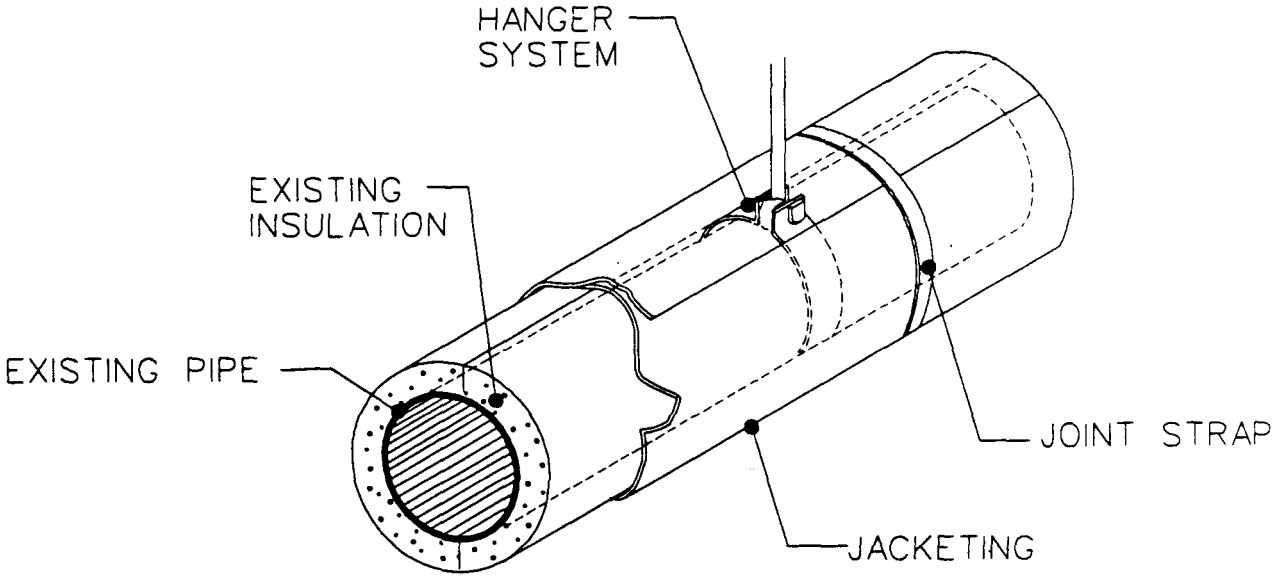


NOTE: THIS SHEET CAN BE USED FOR VERTICAL OR HORIZONTAL PIPING.

## Removal of pipe insulation (using glove bag)

1. Install glove bag as specified on sheet 10. Prepare modified containment area as specified on sheet 21. Adequately wet mist insulation surface with amended water, initially and during removal.

2. Remove jacketing and asbestos pipe insulation from pipe and hanger to within 2 inches of inside edges of glove bag.

3. Clean exposed surfaces by spraying with amended water and brushing.

4. Inspect and reclean as necessary.

5. Spray a tinted penetrating encapsulant on pipe and exposed ends of insulation.

6. Inspect piping and reapply encapsulant as necessary.

7. Prepare area for final air clearance.

8. Carry out final clearance requirements specified on sheets 10 and 21.

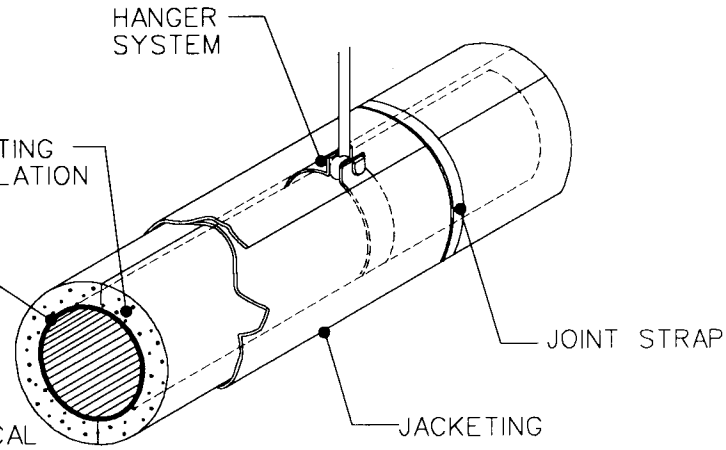


NOTE: THIS SHEET CAN BE USED FOR PIPE FITTINGS AND FOR VERTICAL OR HORIZONTAL PIPING.

## Removal of horizontal pipe insulation (using containment area)

1. Prepare containment area as specified on applicable sheet 2, 3, or 4.

2. Adequately wet mist insulation surface with amended water, initially and during removal. Remove jacketing and insulation from pipe and hanger system.

3. Clean exposed surfaces by spraying with amended water and brushing.

4. Inspect and reclean as necessary.

5. Spray a tinted penetrating encapsulant on pipe and exposed ends of insulation.

6. Inspect piping and reapply encapsulant as necessary.

7. Prepare area for final air clearance.

8. Carry out final clearance requirements specified on applicable sheet 16, 17, or 18.

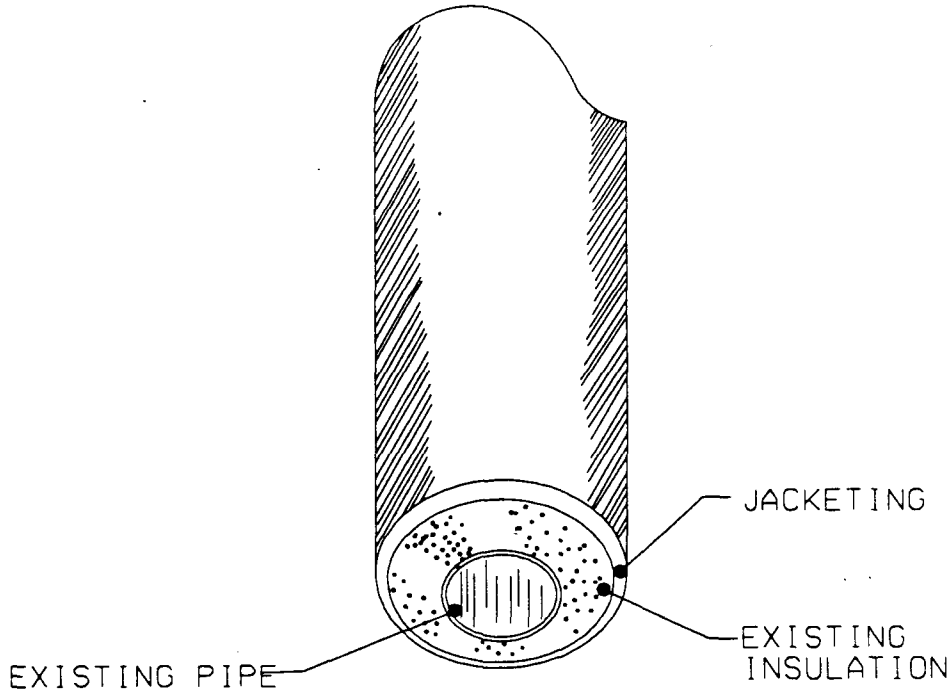


## Removal of pipe insulation (using mini-containment area)

1. Prepare mini-containment area as specified on sheet 7.

2. Adequately wet mist insulation surface with amended water, initially and during removal. Remove jacketing and insulation from pipe and hanger system.

3. Clean exposed surfaces by spraying with amended water and brushing.

4. Inspect and reclean area as necessary.

5. Spray a tinted penetrating encapsulant on pipe and exposed ends of insulation. Inspect and reapply as necessary.

6. Prepare area for final clearance.

7. Carry out final clearance requirements specified on sheet 7.

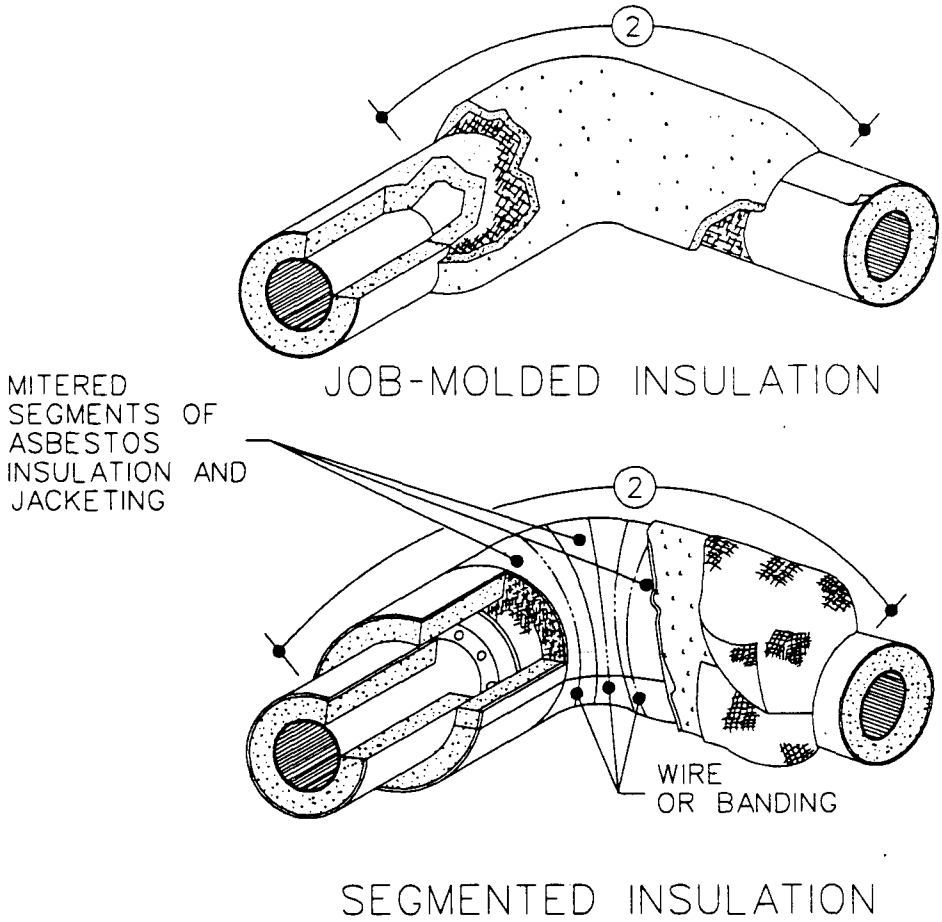


## Removal of pipe-fitting insulation (using glove bag)

1. Install glove bag as specified on sheet 10. Prepare modified containment area as specified on sheet 21.

2. Adequately wet mist with amended water, initially and during removal procedure. Remove jacketing and asbestos-containing insulation from fittings and onto straight run of pipe until only asbestos-free insulation remains.

3. Clean exposed surfaces by spraying with amended water and brushing. HEPA vacuum and wet wipe all surfaces.

4. Inspect and reclean area as necessary.

5. Spray a tinted penetrating encapsulant on pipe and exposed ends of insulation.

6. Inspect and reapply penetrating encapsulant as necessary.

7. Prepare area for final air clearance.

8. Carry out final clearance requirements as specified on sheets 10 and 21.

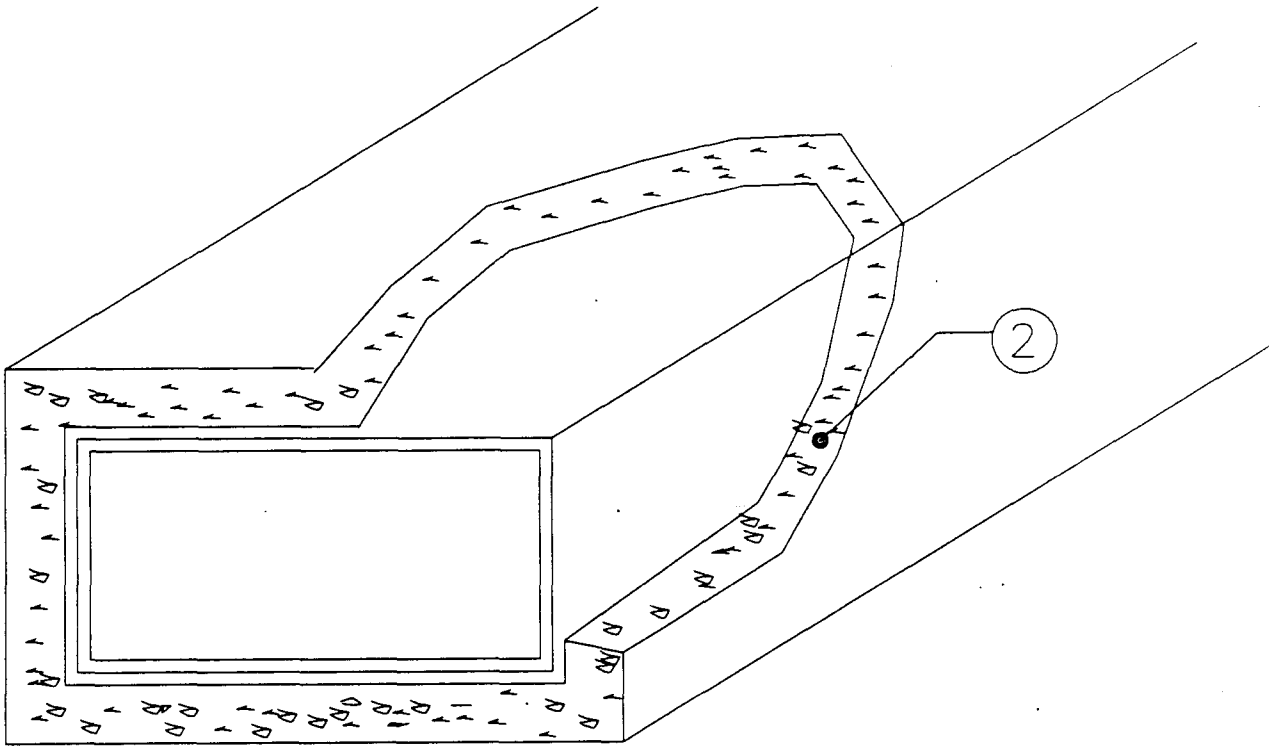


## Removal of duct insulation

1. Prepare containment area as specified on applicable sheet 2, 3, or 4.

2. Adequately wet mist surface with amended water, initially and during removal procedure. Remove all asbestos insulation from duct. Place in approved container; see sheet 9. Apply labels; see sheet 14. Brush, HEPA vacuum, and wet wipe exposed duct surfaces to remove residual material.

3. Inspect and reclean area as necessary.

4. Apply tinted penetrating encapsulant. Inspect and reapply as necessary.

5. Prepare area for final air clearance.

6. Carry out final clearance requirements as specified on applicable sheet 16, 17, or 18.

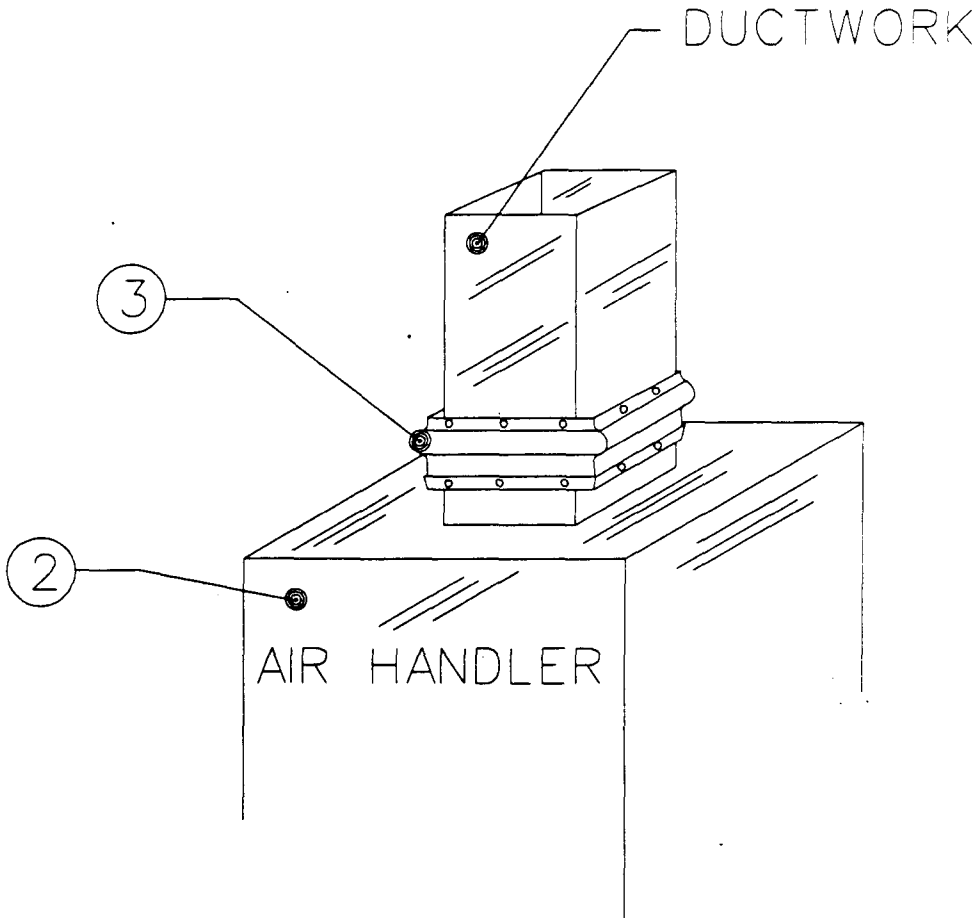


## Removal of asbestos flex connector

1. Prepare modified containment area as specified on sheet 21.

2. Disconnect all electrical power to the air handler.

3. Adequately mist flex connector with removal encapsulant. Remove existing flex connector. Place in an approved container; see sheet 9. Apply labels; see sheet 14.

4. Clean, HEPA vacuum, and wet wipe area in the immediate vicinity of removed materials.

5. Inspect and reclean as necessary.

6. Prepare area for final clearance.

7. Carry out final clearance requirements as specified on sheet 21.



★ U.S. GOVERNMENT PRINTING OFFICE: 1992 329-356/70095

SECTION TABLE OF CONTENTS

DIVISION 13 - SPECIAL CONSTRUCTION

SECTION 13281A

LEAD HAZARD CONTROL ACTIVITIES

**03/02**

PART 1 GENERAL

1.1 REFERENCES
1.2 DEFINITIONS
1.3 DESCRIPTION OF WORK
1.3.1 Protection of Existing Areas To Remain
1.3.2 Coordination with Other Work
1.4 SUBMITTALS
1.5 QUALIFICATIONS
1.5.1 Qualifications and Organization Report
1.5.2 Personnel and Subcontractor Responsibilities and Qualifications
1.5.2.1 Qualified Safety and Health Professional (QSHP)
1.5.2.2 Lead Hazard Control Workers
1.5.2.3 Independent Certified Risk Assessor
1.5.2.4 Testing Laboratories
1.5.2.5 Blood Lead Testing
1.5.2.6 Disposal Facility and Transporter
1.6 REGULATORY REQUIREMENTS
1.7 ACCIDENT PREVENTION PLAN (APP)
1.7.1 APP Content and Organization
1.7.1.1 Lead Hazard Control Plan Appendix
1.7.1.2 Activity Hazard Analyses Appendix
1.7.1.3 NOT USED
1.7.1.4 Clearance Plan Appendix
1.7.2 NOT USED
1.8 PRE-CONSTRUCTION SAFETY CONFERENCE
1.8.1 Conference General Requirements
1.8.2 Preparatory Inspection Meeting
1.9 MEDICAL SURVEILLANCE REQUIREMENTS
1.10 RESPIRATORY PROTECTION PROGRAM
1.11 LICENSES, PERMITS AND NOTIFICATIONS
1.12 TRAINING
1.12.1 OSHA Training Requirements
1.12.2 Qualified Safety and Health Professional
1.12.3 NOT USED
1.12.4 Abatement Worker
1.12.5 Training Program Certification
1.13 SAMPLING AND ANALYSIS
1.13.1 Sampling and Analytical Procedures
1.13.1.1 Sampling and Analysis Methods
1.13.1.2 Paint Chip Sampling and Analysis
1.13.1.3 Dust Wipe Materials, Sampling and Analysis
1.13.1.4 Soil Sampling and Analysis
1.13.2 Occupational Exposure Assessment
1.13.3 Lead Hazard Control Area/Containment Monitoring
1.13.4 NOT USED

1.13.5 Clearance Monitoring
1.13.6 Waste Disposal Sampling
1.13.7 Analytical Results
1.14 CLEARANCE REQUIREMENTS
1.15 PERSONAL PROTECTIVE EQUIPMENT (PPE)
1.16 HYGIENE FACILITIES
1.16.1 Hand Wash Stations
1.16.2 Change Area
1.16.3 Showers
1.16.4 Eating Area
1.17 POSTED WARNINGS AND NOTICES
1.17.1 Regulations
1.17.2 Warning Signs and Labels
1.17.2.1 Warning Signs
1.17.2.2 Warning Labels
1.17.3 Worker Information
1.17.4 Air Monitoring Results
1.17.5 Emergency Telephone Numbers
1.18 MATERIALS AND EQUIPMENT
1.18.1 Abrasive Removal Equipment
1.18.2 Negative Air Pressure System
1.18.2.1 Minimum Requirements
1.18.2.2 Auxiliary Generator
1.18.3 Vacuum Systems
1.18.4 Heat Blower Guns
1.18.5 Chemical Paint Strippers
1.18.6 Chemical Paint Stripper Neutralizer
1.18.7 Detergents and Cleaners
1.19 EXPENDABLE SUPPLIES
1.19.1 Polyethylene Bags
1.19.2 Polyethylene Leak-tight Wrapping
1.19.3 Polyethylene Sheeting
1.19.4 Tape and Adhesive Spray
1.19.5 Containers
1.19.6 Chemicals
1.20 STORAGE OF MATERIALS

PART 2 PRODUCTS (NOT APPLICABLE)

PART 3 EXECUTION

3.1 WORK PROCEDURES
3.1.1 Lead Hazard Control Areas, Equipment and Procedures
3.1.2 Lead Hazard Control Areas
3.1.3 Negative Air Pressure System Containment
3.2 USE OF HYGIENE FACILITIES
3.3 FURNISHINGS
3.4 WASTE DISPOSAL PROCEDURES
3.4.1 Construction Debris and/or Sanitary Landfill Waste
3.4.2 Waste Stream Classification
3.4.3 RCRA Subtitle C Hazardous Waste
3.4.4 Hazardous Waste Transportation and Disposal
3.5 LEAD HAZARD CONTROL PROCEDURES, METHODS AND TECHNIQUES.
3.5.1 NOT USED
3.5.2 NOT USED
3.5.3 NOT USED
3.5.4 Enclosure Systems
3.5.5 Paint Removal Methods

3.5.5.1 Low Temperature Heat Gun
3.5.5.2 HEPA Sanding
3.5.5.3 Wet Scraping
3.5.5.4 HEPA Vacuum Blasting
3.5.5.5 HEPA Vacuum Needle Gun
3.5.5.6 Onsite Paint Removal
3.5.6 Lead Hazard Soil Barriers and Controls
3.5.6.1 NOT USED
3.5.6.2 NOT USED
3.5.6.3 NOT USED
3.5.6.4 Paving with Concrete or Asphalt
3.5.6.5 Removing Exterior Surface Lead-Contaminated Debris
3.6 CLEARANCE PROCEDURES
3.6.1 Visual Inspection
3.6.2 Analytical Demonstration of Clearance
3.7 EVALUATION OF SAMPLING AND MONITORING RESULTS
3.7.1 Occupational Safety and Health
3.7.2 Control Efficiency of Containment Features
3.7.3 Clearance
3.7.4 Removal of Lead Hazard Control Area
3.8 CLEARANCE REPORT
3.9 TITLE TO MATERIALS
3.10 PAYMENT FOR HAZARDOUS WASTE
3.11 CERTIFICATION OF VISUAL INSPECTION

-- End of Section Table of Contents --

# SECTION 13281A

# LEAD HAZARD CONTROL ACTIVITIES
**03/02**

## PART 1 GENERAL

Use this Section if lead paint is encountered during the removal of fuel system components

### 1.1 REFERENCES

The publications listed below form a part of this specification to the extent referenced. The publications are referred to in the text by basic designation only.

AMERICAN NATIONAL STANDARDS INSTITUTE (ANSI)

| | |
|---|---|
| ANSI Z9.2 | (1979; R 1991) Fundamentals Governing the Design and Operation of Local Exhaust Systems |

ASTM INTERNATIONAL (ASTM)

| | |
|---|---|
| ASTM E 1613 | (1999) Standard Test Method for Determination of Lead by Inductivety Coupled Plasma Atomic Emission Spectrometry (ICP-AES), Flame Atomic Absorption Spectrometry (FAAS), or Graphite Furnace Atomic Absorption (GFAAS) Techniques |
| ASTM E 1727 | (1999) Field Collection of Soil Samples for Lead Determination by Atomic Spectrometry Techniques |
| ASTM E 1728 | (1999) Field Collection of Settled Dust Samples Using Wipe Sampling Methods for Lead Determination by Atomic Spectrometry Techniques |
| ASTM E 1729 | (1999) Field Collection of Dried Paint Samples for Lead Determination by Atomic Spectrometry Techniques |
| ASTM E 1792 | (1996a) Wipe Sampling Materials for Lead in Surface Dust |

NATIONAL FIRE PROTECTION ASSOCIATION (NFPA)

| | |
|---|---|
| NFPA 701 | (1999) Methods of Fire Tests for Flame-Resistant Textiles and Films |

NATIONAL INSTITUTE FOR OCCUPATIONAL SAFETY AND HEALTH (NIOSH)

| | |
|---|---|
| NIOSH 84-100 | (1984; Supple 1985, 1987, 1988 & 1990) NIOSH Manual of Analytical Methods |

U.S. ARMY CORPS OF ENGINEERS (USACE)

| | |
|---|---|
| EM 385-1-1 | (2003) U.S. Army Corps of Engineers Safety and Health Requirements Manual |

U.S. DEPARTMENT OF HOUSING AND URBAN DEVELOPMENT (HUD)

| | |
|---|---|
| HUD 6780 | (1995; Errata Aug 1996;Rev Ch. 7 - 1997) Guidelines for the Evaluation and Control of Lead-Based Paint Hazards in Housing |

U.S. NATIONAL ARCHIVES AND RECORDS ADMINISTRATION (NARA)

| | |
|---|---|
| 29 CFR 1910 | Occupational Safety and Health Standards |
| 29 CFR 1926 | Safety and Health Regulations for Construction |
| 40 CFR 745 | Lead-Based Paint Poisoning Prevention in Certain Residential Structures |

UNDERWRITERS LABORATORIES (UL)

| | |
|---|---|
| UL 586 | (1996; Rev thru Aug 1999) High-Efficiency, Particulate, Air Filter Units |

1.2 DEFINITIONS

a a. Lead Hazard Control Activity - Any construction work where a worker may be occupationally exposed to lead and procedures have to be followed to assure that: 1). Lead inside the lead hazard control area is cleaned up to appropriate levels and 2). Lead dust does not disperse outside the lead hazard control area at unacceptable levels.

b. Public/Commercial Building - Buildings on real property, including residential real property, generally accessible to the public except target housing, child occupied facilities and industrial buildings. Examples include offices, stores/shopping centers, churches, schools, barracks, hospitals, museums, airports, hotels, convention centers.

c. Industrial Building - Any building used for industrial purposes where normal operations inside the building may produce lead aerosol that will settle out on inside surfaces.

1.3 DESCRIPTION OF WORK

The work covered by this section includes work tasks, on the individual work task data sheets at the end of this section, and the precautions specified in this section for the protection of workers, building occupants and the environments.

1.3.1 Protection of Existing Areas To Remain

All project work including, but not limited to, lead hazard work, storage, transportation, and disposal shall be performed without damaging or contaminating adjacent work and areas. Where such work or areas are damaged or contaminated, the Contractor shall restore work and areas to the original condition at no additional cost to the Government.

1.3.2 Coordination with Other Work

The contractor shall coordinate lead hazard control activities with work being performed in adjacent areas. Coordination procedures shall be explained in the Contractor's Accident Prevention Plan and shall describe how the Contractor will prevent lead exposure to other contractors and/or Government personnel performing work unrelated to lead hazard control activities.

1.4 SUBMITTALS

Government approval is required for submittals with a "G" designation; submittals not having a "G" designation are for information only. When used, a designation following the "G" designation identifies the office that will review the submittal for the Government. The following shall be submitted in accordance with Section 01330 SUBMITTAL PROCEDURES:

SD-03 Product Data

Materials and Equipment; G-AO
Expendable Supplies; G-AO

A description of the materials, equipment and expendable supplies required; including Material Safety Data Sheets (MSDSs) for material brought onsite to perform the work.

Qualifications; G-AO

A report providing evidence of qualifications and designating responsibilities for personnel and laboratories.

SD-06 Test Reports

Pressure Differential Log; G-AO
Licenses, Permits and Notifications; G-AO
Accident Prevention Plan (APP); G-AO

A report describing how the Contractor will protect workers, building occupants, and building contents while performing lead hazard control activities; and how project clearance will be performed.

Sampling and Analysis; G-AO

A log of the analytical results required for the sampling. The log shall be kept current.

Clearance Report; G-AO

Report prepared by the QSHP.

## 1.5 QUALIFICATIONS

### 1.5.1 Qualifications and Organization Report

The Contractor shall furnish a qualification and organization report. The report shall describe the qualifications of the qualified safety and health professional (QSHP), onsite safety and health supervisor (OSHS), labor staff and the independent risk assessor. The report shall include an organization chart showing the Contractor's personnel by name and title and project specific responsibilities and authorities. The report shall describe the qualifications of the laboratories selected for this project. The report shall be signed by the Contractor and the qualified safety and health professional to indicate that all personnel and laboratories comply with certification and experience requirements of this section and that project personnel have been given the authority to complete the tasks assigned to them.

### 1.5.2 Personnel and Subcontractor Responsibilities and Qualifications

#### 1.5.2.1 Qualified Safety and Health Professional (QSHP)

The QSHP shall be responsible for development of project specific requirements in the Accident Prevention Plan (APP); supervise implementation of the APP requirements; visit the site as needed to verify effectiveness of the APP and to coordinate resolution of unknown situations that may develop as the work progresses; be available to provide consultation to the Onsite Safety and Health Supervisor (OSHS); review sampling and analytical results to evaluate occupational exposure levels, verify effectiveness of controls and determine if clearance requirements have been met. The QSHP shall have demonstrable experience with the implementation of occupational safety and health regulations.

#### 1.5.2.2 Lead Hazard Control Workers

Lead Hazard Control workers shall be responsible for performing the labor necessary to complete the lead hazard control activities required in this contract.

#### 1.5.2.3 Independent Certified Risk Assessor

The independent Certified Risk Assessor shall be a subcontractor to the prime Contractor on the project. The risk assessor shall be responsible to perform the sampling and evaluating the analytical data to verify clearance levels have been achieved. The independent risk assessor shall sign the clearance report indicating clearance requirements for the contract have been met.

#### 1.5.2.4 Testing Laboratories

The laboratory selected to perform analysis on paint chip, soil or dust wipe samples shall be accredited by EPA's National Lead Laboratory Accreditation Program (NLLAP). The laboratory selected perform analysis on worker exposure (industrial hygiene) samples shall be in the American Industrial Hygiene Association's Industrial Hygiene Laboratory Accreditation Program (IHLAP) and shall be successfully participating in the Proficiency Analytical Testing (PAT) program for lead.

1.5.2.5 Blood Lead Testing

The laboratory selected to perform analysis on worker blood samples shall be approved by OSHA and meet the requirements contained in http://www.osha-slc.gov/OCIS/toc_bloodlead.html.

1.5.2.6 Disposal Facility and Transporter

The Contractor shall furnish written evidence that the landfill to be used is approved for lead disposal by USEPA and state and local requirements. Copies of any required signed agreements between the Contractor (including subcontractors and transporters) and the lead disposal facility shall be provided.

1.6 REGULATORY REQUIREMENTS

In addition to the detailed requirements of this specification, work shall be performed in accordance with requirements of EM 385-1-1 and applicable regulations including, but not limited to 29 CFR 1910, 29 CFR 1926, especially Section .62, and the accepted Accident Prevention Plan with Appendices. Matters of interpretation of the standards shall be resolved to the satisfaction of and with the concurrence of, the Contracting Officer before starting work. Where these requirements vary, the most stringent shall apply.

1.7 ACCIDENT PREVENTION PLAN (APP)

1.7.1 APP Content and Organization

The Contractor's Accident Prevention Plan shall be organized into 5 parts, consisting of the overall plan and 4 appendices. The overall plan shall address each element in Appendix A of EM 385-1-1 in project specific detail. The elements are: a. Signature Sheet, b. Background Information, c. Statement of Safety and Health Policy, d. Responsibilities and Lines of Authorities, e. Subcontractors and Suppliers, f. Training, g. Safety and Health Inspections, h. Safety and Health Expectations, Incentive Programs and Compliance, i. Accident Reporting, j. Medical Support, k. Corporate Plans and Programs required by this contract, (HAZCOM, Respiratory Protection).

1.7.1.1 Lead Hazard Control Plan Appendix

The Lead Hazard Control Appendix shall address occupational exposure issues and shall describe the procedures to be followed to protect employees from lead hazards while performing lead hazard control activities. Each of the following elements shall be addressed in the lead hazard control appendix:

a. The location and a brief description of each work activity that will emit lead into the workplace atmosphere. A description of any components containing lead shall be included and keyed to the project drawings.

b. Description of equipment and materials, controls, crew size, worker responsibilities, and operating and maintenance procedures.

c. Description and sketch of the Lead Hazard Control Areas, including decontamination areas.

d. Description of the specific lead control methods and procedures to

protect workers and other onsite contractors from lead exposure.

e. Technologic equipment used to keep occupational exposure below the Permissible Exposure Limit and minimize worker exposure to lead (i.e., HEPA-filtered vacuum equipment/cleaners, special negative air enclosure equipment and supplies, etc.).

f. Worker Exposure Assessment including methods and procedures to monitor and document worker exposure to lead. Worker exposure monitoring shall be broken into two parts in the plan. Part A: Initial Determination. The Contractor shall describe worker monitoring (if performed for the "initial determination" described in 29 CFR 1926 (.62) (d). Monitoring for the initial determination may be omitted from the plan if the Contractor has sufficient proof from previous operations as specified in 29 CFR 1926 (.62) (d)(3)(iii) and (iv) that workers will not be exposed over the action level. The Contractor shall substitute objective proof of action level compliance in Part A if "initial determination" monitoring is omitted. Part B: Continued Exposure Monitoring. Worker exposure monitoring after the initial lead exposure determination has been made.

g. Work Practices Program describing the protective clothing to be used to protect workers from lead exposure, house keeping procedures employed to minimize spread on lead contamination in the lead hazard control area, hygiene facilities and practices used to prevent workers from inadvertent ingestion of lead.

h. Administrative Control Procedures, to be used as a last resort, to limit worker exposure to lead. The worker rotation schedule to be employed, should engineering or personal protective equipment precautions fail to be effective, shall be described. This element of the plan shall be omitted if administrative controls will not be used.

i. Medical Surveillance practices and procedures used to monitor worker exposure to lead and to assure fitness for wearing respiratory protection devices.

j. Worker training meeting the requirements of 29 CFR 1926 Sections (.62) and (.59) to assure workers understand hazard associated with working with lead and how to protect themselves.

k. Security: Security sufficient to deter inappropriate personnel will be used for each lead hazard control area. A log book shall be kept documenting entry into and out of the lead hazard control area. Persons entering control areas shall be trained, medically evaluated, and equipped with personal protective equipment required for the specific control area to be entered.

1.7.1.2 Activity Hazard Analyses Appendix

An Activity Hazard Analysis (AHA) shall be prepared for each work task data element specified on the individual work task data element sheets at the end of this section. The AHA shall be submitted to the Contracting Officer prior to beginning specified work. Format shall be in accordance with EM 385-1-1, figure 1-1. The AHA shall be continuously reviewed and modified, when appropriate, to address changing conditions or operations. Each accepted AHA shall be appended to and become part of the APP.

1.7.1.3 NOT USED

1.7.1.4 Clearance Plan Appendix

The Contractor shall develop a Clearance Plan describing practices and procedures used to assure that lead hazard control activities are complete and that lead contamination within the lead hazard control area comply with final clearance levels or visual clearance criteria. Sampling and analysis procedures used to document project completion and clearance goals shall be explained in the Clearance Plan Appendix.

1.7.2 NOT USED

1.8 PRE-CONSTRUCTION SAFETY CONFERENCE

1.8.1 Conference General Requirements

The Contractor and the QSHP shall attend a pre-construction safety conference prior to starting work. Items required to be submitted shall be reviewed for completeness, and where specified, for acceptance. Details of the APP shall be revised to correct any deficiencies, and resubmitted for acceptance. Onsite work shall not begin until the APP has been accepted, unless otherwise authorized by the Contracting Officer. One copy of the APP shall be maintained in the Contractor's jobsite file, and a second copy shall be posted where it will be accessible to personnel on the site. As work proceeds, the APP shall be adapted to new situations and conditions. Changes to the APP shall be made by the QSHP with acceptance by the Contracting Officer. Should an unforeseen hazard become evident during performance of the work, the QSHP shall inform the Contracting Officer, both verbally and in writing, for immediate resolution. In the interim, the QSHP shall take necessary action to re-establish and maintain safe working conditions; and to safeguard onsite personnel, visitors, the public, and the environment. Disregard for provisions of this specification, or the accepted APP, shall be cause for stopping of work until the matter is rectified.

1.8.2 Preparatory Inspection Meeting

The Contractor shall arrange and hold a preparatory inspection meeting to review completeness and adequacy of the APP immediately prior to beginning each phase of work.

1.9 MEDICAL SURVEILLANCE REQUIREMENTS

The Contractor shall comply with the following medical surveillance requirements:

a. The Contractor shall make every attempt to keep occupational exposure to lead on this project below the action level of 30 micrograms/cubic meter defined in 29 CFR 1926 (.62). If it is not possible, and if occupational exposures could possibly exceed the action level for 30 or more days per year, the Contractor shall institute a medical surveillance program. The program shall meet the examination frequency and content requirements specified in paragraph (j)(1), (j)(2) and (j)(3) of 29 CFR 1926 (.62). Medical removal as specified in paragraph (k) of 29 CFR 1926 (.62), if necessary, shall be at the Contractor's expense.

b. Medical surveillance and biological monitoring shall be in compliance with 29 CFR 1926 (.62) (g) and (j). Initial biological monitoring shall be performed on lead hazard control workers prior to assignment to the project. Workers shall not be assigned to the project if results indicate a need for restricted activities.

c. All lead hazard control workers shall pass the medical examinations necessary to be approved by the occupational physician to wear respiratory protection on this project. Occupational physician's approval shall be given prior to assignment to the project.

## 1.10 RESPIRATORY PROTECTION PROGRAM

The Contractor shall have a written respiratory protection program and shall be fully capable of implementing the requirement of the respiratory protection program on this project. The respiratory protection program shall meet the requirements of 29 CFR 1926 (.62) and 29 CFR 1910 (.134). Project specific respiratory protection requirements shall be included in the lead hazard control plan appendix of the Contractor's accident prevention plan.

## 1.11 LICENSES, PERMITS AND NOTIFICATIONS

The Contractor shall certify in writing to the state's environmental protection agency responsible for lead hazard activities and the Contracting Officer at least 10 days prior to the commencement of work that licenses, permits and notifications have been obtained. The Contractor is responsible for all associated fees or costs incurred in obtaining the licenses, permits and notifications.

## 1.12 TRAINING

### 1.12.1 OSHA Training Requirements

All Contractor personnel and/or subcontractors performing or responsible for onsite oversight of lead hazard control activities shall meet the following training requirements.

a. Content of 29 CFR 1926 (.62) and its appendices.

b. How operations could result in exposure over the action level.

c. Purpose, selection, fitting, use and limitations of respirators.

d. Purpose and description of the medical surveillance program.

e. Use of engineering controls and good work practices to limit occupational exposure to lead.

f. Implementation of the lead hazard control plan appendix of the accident prevention plan.

g. Medical supervision for the use of chelating agents.

h. Employee right of access to medical surveillance records as specified in 29 CFR 1910 (.20).

1.12.2 Qualified Safety and Health Professional

The qualified safety and health professional shall meet the training requirements in paragraph 1.12.1 and shall meet the training, experience and authority requirements in 29 CFR 1926 (.62) to be a competent person and be trained and have the experience and education to meet 40 CFR 745 Subpart L requirements to carry the following certifications:

a.
Certified Supervisor

1.12.3 NOT USED

1.12.4 Abatement Worker

Workers shall meet the OSHA Training Requirements specified above and the training requirements in 40 CFR 745 Subpart L to carry certification as a Certified Worker, if required.

1.12.5 Training Program Certification

Training to meet 40 CFR 745 Subpart L requirements shall be provided by an EPA accredited training provider and the Contractor shall provide proof in the Qualifications and Organization Report showing that personnel have passed certification examinations for their respective disciplines, that fees for certification have been paid to the EPA (or to the state for state-run programs) and that EPA has certified the QSHP, independent risk assessor, certified workers to perform their duties.

1.13 SAMPLING AND ANALYSIS

1.13.1 Sampling and Analytical Procedures

1.13.1.1 Sampling and Analysis Methods

Analysis shall conform to NIOSH 84-100 Method 7082, Lead, for personal sampling required by 29 CFR 1926 (.62)

1.13.1.2 Paint Chip Sampling and Analysis

Sampling shall conform to ASTM E 1729. Analysis shall conform to ASTM E 1613.

1.13.1.3 Dust Wipe Materials, Sampling and Analysis

Sampling shall conform to ASTM E 1792 or ASTM E 1728. Analysis shall conform to ASTM E 1613.

1.13.1.4 Soil Sampling and Analysis

Sampling shall conform to ASTM E 1727 Analysis shall conform to ASTM E 1613.

1.13.2 Occupational Exposure Assessment

Sampling and analytical procedures to determine compliance with the occupational exposure monitoring requirement of this section shall be described in the lead hazard control plan appendix of the Contractor's accident prevention plan. Monitoring for the initial determination may be

omitted if the Contractor has sufficient proof from previous operations as specified in 29 CFR 1926 (.62) (d)(3)(iii) and (iv) that workers will not be exposed over the action level. The following occupational exposure monitoring requirements apply and shall be implemented if the requirements of 29 CFR 1926 (.62)(d)(3) (iii) and (iv) cannot be demonstrated.

a. During Initial Monitoring the Contractor shall representatively sample employees with the greatest potential for exposure to aerosolized lead.

b. Continued/Additional Monitoring shall meet applicable paragraphs in 29 CFR 1926 (.62)(d)(6), Frequency, after the initial determination has been made.

1.13.3 Lead Hazard Control Area/Containment Monitoring

The Contractor shall perform a visual inspection once per day outside the lead hazard control area to assure visual clearance criteria are maintained while lead hazard control activities are performed. The Contractor shall clean at its own expense, and to the Contracting Officer's satisfaction, all contaminated surfaces outside the lead hazard control area, if surfaces fail visual clearance criteria.

1.13.4 NOT USED

1.13.5 Clearance Monitoring

Sampling and analytical procedures to determine the clearance requirements of this section shall be described by the Contractor in the Clearance Plan Appendix of the Accident Prevention Plan. The Contractor's Risk Assessor shall perform the following sampling and analysis to verify that clearance requirements for the contract (inside the lead hazard control) area have been met.

a. The Contractor shall take dust wipe samples inside the lead hazard control area after the final visual inspection in the quantities and at the locations specified.

(1) Floors .
(2) Interior Window Sills .
(3) Window Troughs .
(4) Other Abated Materials .

b. The Contractor shall take exterior bare soil samples inside the lead hazard control area after the final visual inspection in the quantities and at the locations specified.

(1) Near the building foundation .
(2) Nearby Play areas .

1.13.6 Waste Disposal Sampling

The Contractor shall sample the following waste streams for TCLP analysis to determine waste disposal requirements.

a. The Contractor shall take 3 samples of building demolition debris.

b. The Contractor shall take 3 samples of paint chips.

c. The Contractor shall take 3 samples of paint residue from stripping (heat or chemical) operations.

d. The Contractor shall take 3 samples of soil.

e. The Contractor shall take 3 samples of settled dust in vacuum canisters.

Sampling is necessary only if this type of work was completed under this contract.

1.13.7 Analytical Results

The Contractor shall develop and maintain during the course of the project a log of analytical results generated by the above sampling requirements. The log shall clearly describe the reason for which the sample was taken (worker exposure, migration control, clearance) the analytical result for each sample and evaluate if the analytical result passed or failed the action levels. At a minimum, the Contractor shall include analytical results for samples required to be taken in paragraphs Occupational Exposure Assessment, Lead Hazard Control Area/Containment Monitoring, Occupancy During Work, and Clearance Monitoring specified above.

1.14 CLEARANCE REQUIREMENTS

The Contractor shall describe clearance requirements for this project in the Clearance Plan Appendix of the Accident Prevention Plan.

a. Clearance levels inside the lead hazard control area, target housing and child occupied facilities, active installations:

(1) Floors .
(2) Interior Window Sills .
(3) Window wells .
(4) Other remediated materials.

b. Clear lead hazard control areas in industrial facilities: visual clearance criteria.

1.15 PERSONAL PROTECTIVE EQUIPMENT (PPE)

The Contractor shall describe the PPE to be used to protect workers from lead hazards in the Lead Hazard Control Plan Appendix of the Accident Prevention Plan. The Contractor shall furnish, at no cost to the workers, clothing for protection from lead-contaminated dust and debris. An adequate supply of these items shall be available for worker and Government personnel use. Protective clothing shall include:

a. Coveralls : Full-body moisture permeable (breathable)disposable coveralls shall be provided to lead hazard control workers.

b. Boots: Boots and shoes shall be provided as required by EM 385-1-1 Section 05.A.08 for workers. Boot/shoe covers shall be provided to prevent contamination of boots and shoes.

c. Hand Protection: Gloves, etc., shall be provided as required by

EM 385-1-1 Section 05.A.10 for workers.

d. Head Protection: Hard hats shall be provided as required by 29 CFR 1910 (.135) and EM 385-1-1 Section 05.D for workers and authorized visitors.

e e. Eye and Face Protection: Eye and face protection shall be provided as required by 29 CFR 1910 (.133) and EM 385-1-1 Section 05.B for workers and authorized visitors.

f. Respirators: NIOSH certified air-purifying respirators or filtering face pieces shall be provided for use as respiratory protection for airborne lead and for other hazardous airborne contaminants that may be encountered; as determine by the on-site safety and health supervisor. At a minimum, respirators shall be furnished to each employee required to enter a lead hazard control area where an employee exposure assessment has not yet been performed, or where monitoring data establishes the need for respiratory protection, or if requested by the employee.

g. Respirator Cartridges/Filtering Face Pieces: Respirator cartridges shall be changed out/filtering face pieces properly disposed of when the they become sufficiently loaded with particulate matter that workers experience breathing resistance. Cartridges and filtering face pieces shall be N, R or P 100 rated to assure sufficient protection from lead exposure.

## 1.16 HYGIENE FACILITIES

The Contractor shall describe the personal hygiene facilities to be used by the workers in the Lead Hazard Control Plan Appendix of the Accident Prevention Plan. The Contractor shall provide hygiene facilities for lead hazard control workers. Hygiene facilities shall consist of the following:

### 1.16.1 Hand Wash Stations

The Contractor shall provide hand washing facilities for use by lead hazard control workers. Hand washing facilities shall comply with the requirements in 29 CFR 1926 (.51) (f). Faces and hands shall be washed when leaving the lead hazard control area and after each work-shift if showers are not provided.

### 1.16.2 Change Area

The Contractor shall provide a change area to workers. The change area shall be equipped so that contaminated work clothing and street clothes shall be stored separately to prevent cross contamination.

### 1.16.3 Showers

Showers shall be provided if feasible and if worker exposures exceed the PEL. When provided, showers facilities shall meet the requirements of 29 CFR 1926 (.51) (f).

### 1.16.4 Eating Area

The Contractor shall set aside an area or provide a room for taking breaks and eating lunch. This area shall be kept as free as practicable from lead contamination. Workers shall be required to follow the procedures in 29

CFR 1926 (.62) (i)(4) when using the room.

## 1.17 POSTED WARNINGS AND NOTICES

The following regulations, warnings, and notices shall be posted at the worksite in accordance with 29 CFR 1926 (.62).

### 1.17.1 Regulations

At least two copies of 29 CFR 1926 (.62) shall be made available for use by either the Contracting Officer or affected workers; and for the purpose of providing required information and training to the workers involved in the project. One copy shall be maintained in the Contractor's jobsite file, and a second copy shall be posted where it will be accessible to workers on the site.

### 1.17.2 Warning Signs and Labels

Warning signs shall be posted in each lead hazard control area where worker exposure to lead is undetermined or where the exposures are above the permissible exposure limit as defined in 29 CFR 1926 (.62). Signs shall be located to allow personnel to read the signs and take necessary precautions before entering the lead hazard control area.

#### 1.17.2.1 Warning Signs

Warning signs shall be in English , be of sufficient size to be clearly legible, and display the following:

WARNING
LEAD WORK AREA
POISON
NO SMOKING OR EATING

#### 1.17.2.2 Warning Labels

Warning labels shall be affixed to all lead waste disposal containers used to hold materials, debris and other products contaminated with lead hazards; warning labels shall be in English , and be of sufficient size to be clearly legible, and display the following:

CAUTION: CLOTHING CONTAMINATED WITH LEAD. DO NOT REMOVE DUST BY

BLOWING OR SHAKING. DISPOSE OF LEAD CONTAMINATED WASH WATER IN

ACCORDANCE WITH APPLICABLE FEDERAL, STATE OR LOCAL REGULATIONS.

### 1.17.3 Worker Information

Right-to-know notices shall be placed in clearly visible areas accessible to personnel on the site, to comply with Federal, state, and local regulations.

### 1.17.4 Air Monitoring Results

Air monitoring results shall be prepared so as to be easily understood by the workers. One copy shall be maintained in the Contractor's jobsite file, and a second copy shall be posted where it will be accessible to the workers as specified in 29 CFR 1926 (.62).

1.17.5 Emergency Telephone Numbers

A list of emergency telephone numbers shall be posted at the site. The list shall include numbers of the local hospital, emergency squad, police and fire departments, Government and Contractor representatives who can be reached 24 hours per day, and professional consultants directly involved in the project.

1.18 MATERIALS AND EQUIPMENT

Sufficient quantities of health and safety materials required by 29 CFR 1926 (.62), and other materials and equipment needed to complete the project, shall be available and kept on the site.

1.18.1 Abrasive Removal Equipment

The use of powered machine for vibrating, sanding, grinding, or abrasive blasting is prohibited unless equipped with local exhaust ventilation systems equipped with high efficiency particulate air (HEPA) filters.

1.18.2 Negative Air Pressure System

1.18.2.1 Minimum Requirements

Work shall not proceed in the area until containment is set up and HEPA filtration systems are in place. The negative air pressure system shall meet the requirements of ANSI Z9.2 including approved HEPA filters per UL 586. Negative air pressure equipment shall be equipped with new HEPA filters, and shall be sufficient to maintain a minimum pressure differential of minus 0.02 inch of water column relative to adjacent, unsealed areas. Negative air pressure system minimum requirements are listed below:

a. The unit shall be capable of delivering its rated volume of air with a clean first stage filter, an intermediate filter and a primary HEPA filter in place.

b. The HEPA filter shall be certified as being capable of trapping and retaining mono-dispersed particles as small as 0.3 micrometers at a minimum efficiency of 99.97 percent.

c. The unit shall be capable of continuing to deliver no less than 70 percent of rated capacity when the HEPA filter is 70 percent full or measures 2.5 inches of water static pressure differential on a magnehelic gauge.

d. The unit shall be equipped with a manometer-type negative pressure differential monitor with minor scale division of 0.02 inch of water and accuracy within plus or minus 1.0 percent. The manometer shall be calibrated daily as recommended by the manufacturer.

e. The unit shall be equipped with a means for the operator to easily interpret the readings in terms of the volumetric flow rate of air per minute moving through the machine at any given moment.

f. The unit shall be equipped with an electronic mechanism that automatically shuts the machine off in the event of a filter

breach or absence of a filter.

g. The unit shall be equipped with an audible horn that sounds an alarm when the machine has shut itself off.

h. The unit shall be equipped with an automatic safety mechanism that prevents a worker from improperly inserting the main HEPA filter.

1.18.2.2 Auxiliary Generator

An auxiliary generator shall be provided with capacity to power a minimum of 50 percent of the negative air machines at any time during the work. When power fails, the generator controls shall automatically start the generator and switch the negative air pressure system machines to generator power. The generator shall not present a carbon monoxide hazard to workers.

1.18.3 Vacuum Systems

Vacuum systems shall be suitably sized for the project, and filters shall be capable of trapping and retaining all mono-disperse particles as small as 0.3 micrometers at a minimum efficiency of 99.97 percent. Used filters that are being replaced shall be disposed in a proper manner.

1.18.4 Heat Blower Guns

Heat blower guns shall be flameless, electrical, paint-softener type with controls to limit temperature to 1,100 degrees F. Heat blower shall be DI (non-grounded) 120 volts ac, and shall be equipped with cone, fan, glass protector and spoon reflector nozzles.

1.18.5 Chemical Paint Strippers

Chemical paint strippers shall not contain methylene chloride and shall be formulated to prevent stain, discoloration, or raising of the substrate materials.

1.18.6 Chemical Paint Stripper Neutralizer

Neutralizers for paint strippers shall be compatible with the substrate and suitable for use with the chemical stripper that has been applied to the surface.

1.18.7 Detergents and Cleaners

Detergents or cleaning agents used shall have demonstrated effectiveness in lead control work using cleaning techniques specified by HUD 6780 guidelines.

1.19 EXPENDABLE SUPPLIES

1.19.1 Polyethylene Bags

Disposable bags shall be polyethylene plastic and shall be a minimum of 6 mils thick (4 mils thick if double bags are used) or any other thick plastic material shown to demonstrate at least equivalent performance; and shall be capable of being made leak-tight. Leak-tight means that solids, liquids or dust cannot escape or spill out.

1.19.2 Polyethylene Leak-tight Wrapping

Wrapping used to wrap lead contaminated debris shall be polyethylene plastic that is a minimum of 6 mils thick or any other thick plastic material shown to demonstrate at least equivalent performance.

1.19.3 Polyethylene Sheeting

Sheeting shall be polyethylene plastic with a minimum thickness of 6 mil, or any other thick plastic material shown to demonstrate at least equivalent performance; and shall be provided in the largest sheet size reasonably accommodated by the project to minimize the number of seams. Where the project location constitutes an out of the ordinary potential for fire, or where unusual fire hazards cannot be eliminated, flame-resistant polyethylene sheets which conform to the requirements of NFPA 701 shall be provided.

1.19.4 Tape and Adhesive Spray

Tape and adhesive shall be capable of sealing joints between polyethylene sheets and for attachment of polyethylene sheets to adjacent surfaces. After dry application, tape or adhesive shall retain adhesion when exposed to wet conditions, including amended water. Tape shall be minimum 2 inches wide, industrial strength.

1.19.5 Containers

When used, containers shall be leak-tight and shall be labeled in accordance with EPA, DOT and OSHA standards, as specified in paragraph WARNING LABELS.

1.19.6 Chemicals

Chemicals, including caustics and paint strippers, shall be properly labeled, used in accordance with the manufacturers recommendations and stored in leak-tight containers. Material Safety Data Sheets (MSDSs) shall be provided and hazard communication procedures implemented in conformance with paragraph HAZARD COMMUNICATION PROGRAM.

1.20 STORAGE OF MATERIALS

Materials shall be stored protected from damage and contamination. During periods of cold weather, plastic materials shall be protected from the cold. Flammable or hazardous materials shall not be stored inside a building. Materials shall be regularly inspected to identify damaged or deteriorating items. Damaged or deteriorated items shall not be used and shall be removed from the site as soon as they are discovered. Stored materials shall not present a hazard or an inconvenience to workers, visitors, and/or other occupants and employees of the facility in which they are located.

PART 2 PRODUCTS (NOT APPLICABLE)

PART 3 EXECUTION

3.1 WORK PROCEDURES

The Contractor shall perform work following practices and procedures described accident prevention plan.

3.1.1 Lead Hazard Control Areas, Equipment and Procedures

The Contractor shall set up lead hazard control areas and operate equipment within the lead hazard control area in a manner that will minimize migration of lead dust beyond the lead hazard control area boundaries and minimize exposure to workers.

3.1.2 Lead Hazard Control Areas

Access into lead hazard control areas by the general public shall be prohibited. Workers entering the lead hazard control area shall meet medical surveillance requirements of this contract and shall be required to understand and follow procedures described in the Contractor's accident prevention plan for reducing lead exposure. Lead hazard control area preparation and restriction requirements follow:

a. Containment features for interior lead hazard control projects: Polyethylene sheeting sealed with spray adhesive and duct tape to designate the lead hazard control area. The floor in the lead hazard control area shall be covered with two layers of polyethylene sheeting. The entry/exit shall be sealed with a primitive air lock Openings, such as HVAC supply and return air vents, into the lead hazard control area shall be sealed with polyethylene sheeting and duct tape or with sealed rigid coverings.

b. Containment features for exterior lead hazard control projects: Plastic sheeting.

3.1.3 Negative Air Pressure System Containment

a. The negative air pressure systems shall be operated to provide at least 10 air changes per hour inside the containment. The local exhaust unit equipment shall be operated continuously until the containment is removed. The negative air pressure system shall be smoke tested for leaks at the beginning of each shift. The OSHS is responsible to continuously monitor and keep a pressure differential log with an automatic manometric recording instrument. The Contracting Officer shall be notified immediately if the pressure differential falls below the prescribed minimum. The building ventilation system shall not be used as the local exhaust system for the lead hazard control area utilizing the negative air pressure system. The local exhaust system shall terminate out of doors unless the Contracting Officer allows an alternate arrangement. All filters shall be new at the beginning of the project and shall be periodically changed as necessary to maintain specified pressure differential and shall be disposed of as lead contaminated waste.

b. Discontinuing Negative Air Pressure System. The negative air pressure system shall be operated continuously during lead hazard control work unless otherwise authorized by the Contracting Officer. At the completion of the project, units shall be run until full cleanup has been completed and final clearance testing requirements have been met. Dismantling of the negative air pressure systems shall conform to written decontamination procedures as presented in the Lead Hazard Control Plan. The HEPA filter machine intakes shall be sealed with polyethylene to prevent environmental contamination.

## 3.2 USE OF HYGIENE FACILITIES

a. Personnel and equipment shall be decontaminated when exiting the lead hazard control area. The Contractor shall comply with the following personnel and equipment decontamination procedures:

(1) HEPA vacuum outer garments and equipment.
(2) Wet Wipe Equipment.
(3) Remover outer layer of garments.
(4) Thoroughly wash face and hands, if showering not required.
(5) Shower (if applicable).
(6) Remove Respirator (if applicable).
(7) Exit lead hazard control area.

b. The Contractor shall provide, and workers shall use, a change room to change into work clothing at the beginning of a work shift. At the end of the work shift workers shall change back into street clothing and leave contaminated work clothing at the site for disposal or laundering.

c. The Contractor shall provide an eating facility as free as practical from lead contamination. Workers shall be allowed usage of the eating facility for rest/lunch breaks.

## 3.3 FURNISHINGS

The Contractor shall remove furniture and equipment from the work area before lead hazard control work begins.

## 3.4 WASTE DISPOSAL PROCEDURES

### 3.4.1 Construction Debris and/or Sanitary Landfill Waste

The Contractor shall dispose of the following waste streams in the appropriate landfill:

### 3.4.2 Waste Stream Classification

The Contractor shall determine the RCRA waste classification for all waste streams generated by the lead hazard control project. The Contractor shall perform the sampling and analysis specified in paragraph WASTE DISPOSAL, evaluate analytical results and propose waste stream treatment and disposal requirements for the contract. The Contracting Officer will approve waste stream treatment and disposal requirements proposed by the Contractor.

### 3.4.3 RCRA Subtitle C Hazardous Waste

The Contractor shall dispose of the following waste streams at the RCRA subtitle C Treatment Storage and Disposal Facility or at the RCRA subtitle C hazardous wastes landfill: Building demolition debris, Dust and paint chips from HEPA vacuuming operations, Paint sludge and residue from chemical or heat stripping procedures, and Lead contaminated soil.

### 3.4.4 Hazardous Waste Transportation and Disposal

The Contractor shall transport, treat and dispose of hazardous waste in accordance with the requirements of Section 02120A TRANSPORTATION AND DISPOSAL OF HAZARDOUS MATERIALS.

3.5 LEAD HAZARD CONTROL PROCEDURES, METHODS AND TECHNIQUES.

3.5.1 NOT USED

3.5.2 NOT USED

3.5.3 NOT USED

3.5.4 Enclosure Systems

Enclosure systems shall use rigid, durable construction materials that are mechanically fastened to the substrate to act as a barrier between the lead-based paint and the environment. Surfaces to be enclosed shall be labeled (behind the enclosure), horizontally and vertically, approximately every 6 feet with the warning:

DANGER: LEAD-BASED PAINT

A durable drawing of the property floor plan shall be mounted on a sturdy metal or wood base and affixed with screws to a wall in the utility room next to the electrical panel or at any other closed location easily accessible by maintenance personnel. The drawing shall be covered with plastic for protection. Enclosures shall be highlighted on the diagram and identified as hazardous.

3.5.5 Paint Removal Methods

Prohibited paint removal methods shall include: open flame burning or torching, including the use of heat guns having operating temperatures greater than 1,100 degrees F; machine sanding or grinding without HEPA exhaust; non-contained hydro blasting or high-pressure water wash; abrasive blasting or sandblasting without HEPA exhaust; dry scraping, except near electrical outlets or when using a heat gun. Chemical paint removers containing methylene chloride are prohibited. Building components and structures adjacent to the removal process shall be appropriately protected from damage due to the removal process employed. Stripping shall be done according to manufacturer's recommendations. Stripped substrates shall be thoroughly washed and neutralized before applying a primer or sealing coat.

3.5.5.1 Low Temperature Heat Gun

Prior to beginning work, electrical fuses and adequate electrical supply shall be verified. Only fuses properly sized for the service, and otherwise permitted by code, shall be used. Properly sized fuses shall not be changed out with larger fuses to increase amperage beyond safe limits. Portable electric generators may be used to safely supply adequate amperage. An accessible garden hose with a pressure-release spray nozzle; a crowbar to remove smoldering wood; and a long-handled sledgehammer to open up walls exposed to smoldering insulation shall be readily available. A fully charged ABC-type (20 pound minimum) fire extinguisher shall be available within 100 feet of the work area. Adequate ventilation shall be provided for the work area. Worker protection shall include respirators equipped with combination HEPA filter/organic vapor cartridges. The Contractor shall equip heat guns with extension tubes or wire mesh as needed to prevent premature burnout of the heating elements and to minimize paint film scorching or smoking. Optimal heat gun/substrate separation is typically 3 to 6 inches.

3.5.5.2 HEPA Sanding

The HEPA vacuum shall be correctly sized to provide adequate airflow, permitting the system to operate properly. If longer exhaust hoses are used, a larger HEPA vacuum shall be provided to handle the extra pressure drop in the vacuum hose. The HEPA filter shall be operated in accordance with manufacturer's instructions. Worker protection shall include respirators or filtering facepieces equipped with HEPA filters.

3.5.5.3 Wet Scraping

Surfaces near electrical outlets shall not be moistened but shall be dry scraped only. Loose material shall be scraped from the surface and deposited onto the containment plastic. Damp scrapings shall be cleaned up as soon as possible to prevent tracking throughout the work area. Scraper blades shall be kept sharp. Additional scraper blades shall be supplied and shall be selected for the type of surface being scraped.

3.5.5.4 HEPA Vacuum Blasting

The blast head shall be shrouded under a vacuum and exhaust passed through a HEPA filter. The blast head shall remain in continuous contact with the surface to avoid dispersal of both the blast medium and particulate. The equipment shall be equipped with a device that separates the blast media from the material to be removed, effectively recycling the blast material and minimizing the amount of waste. Work shall be positioned to minimize the degree workers must reach above shoulder level, in order to minimize worker fatigue and loss of blast head contact with the surface.

3.5.5.5 HEPA Vacuum Needle Gun

The vacuum needle gun head shall be equipped with a vacuum shroud designed for the surface to be treated. The needle gun shall be operated to maximize surface contact of the vacuum shroud. Work shall be positioned to minimize the degree workers must reach above shoulder level, in order to minimize worker fatigue and loss of needle gun contact with the surface.

3.5.5.6 Onsite Paint Removal

Paint remover shall be applied in accordance with the manufacturer's instructions. Outdoor application shall only be performed in weather conditions recommended by the manufacturer. The work area surrounding the application process shall be secured to prevent access by children and unauthorized personnel. Workers shall be provided with the appropriate personal protective clothing and equipment in accordance with manufacturer's recommendations and good industrial hygiene practice. A portable eyewash shall be provided whenever eye irritant strippers are used. An abundant source of running water shall be provided in the work area.

3.5.6 Lead Hazard Soil Barriers and Controls

Soil barriers to control lead hazards shall be built in accordance with the following requirements and the requirements and specifications included in the following paragraphs:

3.5.6.1 NOT USED

3.5.6.2 NOT USED

3.5.6.3 NOT USED

3.5.6.4 Paving with Concrete or Asphalt

Section 02754A CONCRETE PAVEMENTS FOR AIRFIELDS.

3.5.6.5 Removing Exterior Surface Lead-Contaminated Debris

Section 02220 DEMOLITION and/or 02120A TRANSPORTATION AND DISPOSAL OF HAZARDOUS MATERIALS.

3.6 CLEARANCE PROCEDURES

3.6.1 Visual Inspection

QSHP shall perform a visual inspection, using the form at the end of this section, for each lead hazard control area to assure that lead hazard control activities, identified in the individual work task data elements, have been properly completed. The QSHP shall visually verify that lead hazards have been removed, control technology has been appropriately applied/installed and that the lead hazard control area is free of dust and paint chips generated by lead hazard control activities.

3.6.2 Analytical Demonstration of Clearance

After the visual inspection the QSHP shall take clearance samples for laboratory analysis to verify clearance requirements specified in paragraph CLEARANCE REQUIREMENTS have been met.

3.7 EVALUATION OF SAMPLING AND MONITORING RESULTS

Analytical results from samples taken during lead hazard control activities shall be evaluated to determine compliance with occupational safety and health standards and project specific control efficiency and clearance/clean up levels.

3.7.1 Occupational Safety and Health

The QSHP shall review the analytical results from samples taken for the initial exposure assessment and continued occupational safety and health monitoring if required. Effectiveness and adequacy of personal protective equipment, respirators, work practices, hygiene facilities and personal decontamination procedures shall be evaluated and upgrades/downgrades in equipment and procedures made. After notifying the Contracting Officer the following shall be applied:

a. Exposures over the PEL (0.05 mg/cubic meter):

(1) Improve work practices to reduce exposures.

(2) Don respirators.

(3) Assure eating facilities and change rooms are clean and are free from settled dust.

(4) Shower as part of personal decontamination.

b. Exposures over the Action Level (0.03 mg/cubic meter):

(1) Assure exposed individuals enrolled in the medical surveillance program.

(2) Assure exposed individuals enrolled in and up to date with lead exposure training requirements.

3.7.2 Control Efficiency of Containment Features

The QSHP shall review and document results of the visual inspection determining visual clearance criteria are being met while lead hazard control activities are being performed. The QSHP shall review analytical results from samples taken to determine if lead is migrating outside lead hazard control areas at levels in excess of clearance criteria. The QSHP shall notify the Contracting Officer and apply the following actions if results exceed project specific clearance levels outside the lead hazard control area:

a. Require/improve containment.

b. Improve work practices to reduce lead aerosol generation.

3.7.3 Clearance

The QSHP shall review analytical results for the samples taken to determine compliance with project specific clearance requirements. The following actions apply and shall be performed at the Contractor's expense if project specific clearance levels are exceeded:

Reclean surfaces.
Retest to determine clearance.

3.7.4 Removal of Lead Hazard Control Area

Upon acceptance of the final clearance certification by the Contracting Officer, and when authorized, cleared Lead Hazard Control Area boundary controls and warning signs shall be removed.

3.8 CLEARANCE REPORT

The QSHP shall prepare a clearance report including the following information:

a. Start and completion dates of lead hazard control activities.

b. Type of lead hazard control activity performed (i.e., abatement, interim control, renovation, remodeling), locations and lead hazards controlled or abated.

c. The name and address of each firm conducting lead hazard control activities and the name of each supervisor assigned to the project.

d. The Occupant Protection Plan prepared pursuant to paragraph OCCUPANT PROTECTION PLAN.

e. The name, address and signature of the QSHP or independent risk

assessor to indicate clearance requirements have been met.

f. Certification of each Final Cleaning and Visual Inspection performed by the QSHP.

g. Analytical results from clearance sampling performed by the QSHP or independent risk assessor, the name of the laboratory that conducted the analysis. Results shall be provided in both the laboratory report and on the appropriate example forms provided at the end of this section.

h. A detailed written description of the lead hazard control activities performed, including hazard control methods used, locations of rooms and/or components where lead hazard control activities occurred, reason for selecting particular hazard control methods for each component, and any suggested monitoring of encapsulants or enclosures.

i. Hazardous waste disposal documentation.

j. Contractor provided installation/maintenance manuals.

## 3.9 TITLE TO MATERIALS

Materials resulting from demolition work, except as specified otherwise, shall become the property of the Contractor, and shall be disposed of in accordance with Section 02220 DEMOLITION, except as specified.

## 3.10 PAYMENT FOR HAZARDOUS WASTE

Payment for disposal of hazardous waste will not be made until a signed copy of the manifest from the treatment or disposal facility certifying the amount of lead-containing materials delivered is returned and a copy is furnished to the Government.

## 3.11 CERTIFICATION OF VISUAL INSPECTION

Certify that the lead hazard control areas(s) for each individual work task data elements have passed visual clearance criteria and are ready for clearance sampling. To pass visual clearance, lead hazards have to be removed; control technology appropriately applied/installed; the lead hazard control area must be free from visible dust debris, paint chips or any other residue that may have been generated by the lead hazard control activities.

Signature by the QSHP indicates that the described lead hazard control area(s) have passed visual clearance criteria. Provide detailed description of each Lead Hazard Control Area.

_____

_____

_____

BY:_____
QSHP Date

Print name and title _____

CONTRACTING OFFICER ACCEPTANCE OR REJECTION

The Contracting Officer hereby determines that the Contractor has performed visual inspection of the lead hazard control area and by quality assurance inspection, finds the Contractor's work to be:

_____ Acceptable, ready for performance of clearance sampling

_____ Unacceptable, Contractor instructed to re-clean the lead hazard control area

BY: Contracting Officer's Representative

_____
Signature Date

Print name and title_____

Lead Hazard Control Clearance Sampling Certification Form

Date_____

Name of QSHP or Certified Risk Assessor_____

License No._____

Work Task Data Element _____

Clearance Levels_____
40 CFR 745 Clearance Levels

Sample quantity and location:
Windows _____
Floors _____
Exterior Soils _____

Date of sample collection_____Date Shipped to lab_____

Shipped by_____
Signature

I certify that the clearance samples taken meet the clearance sampling

requirements of this contract.

By:_____ Date:_____
QSHP or independent risk assessor

Print name and Title:_____

CONTRACTING OFFICER ACCEPTANCE OR REJECTION

I have inspected sampling locations and procedures and have found them to be

_____Acceptable, meet contract requirements.

_____Unacceptable, do not meet contract requirements, Contractor is directed to resample.

By: Contracting Officer's Representative

Signature Date

Print Name and Title_____

INDIVIDUAL WORK TASK DATA ELEMENTS

Sheet __1____ of _1_____

There is a separate data sheet for each individual work task.

WORK TASK DESIGNATION NUMBER: _____

2. LOCATION OF WORK TASK: HYDRANT FUEL SYSTEM, OFFUTT AFB

3. BRIEF DESCRIPTION OF THE LEAD HAZARD CONTROL ACTIVITY: Lead paint may be encountered during demolition of pumphouses 528 and 529. Lead paint may also be encountered during demolition of utilities and fuel structures . Lead paint may also have to be removed before cutting metal structures.

4. BUILDING/FACILITY USE: INDUSTRIAL

5. LEAD CONTAMINATED DEBRIS DISPOSAL DESTINATION:

6. CLEARANCE REQUIREMENTS: 40 CFR 745

-- End of Section --

SECTION TABLE OF CONTENTS

DIVISION 13 - SPECIAL CONSTRUCTION

SECTION 13850A

FIRE DETECTION AND ALARM SYSTEM, DIRECT CURRENT LOOP

**02/02**

PART 1 GENERAL

1.1 REFERENCES
1.2 SUBMITTALS
1.3 GENERAL REQUIREMENTS
1.3.1 Standard Products
1.3.2 Nameplates
1.3.3 Keys and Locks
1.3.4 Tags
1.3.5 Verification of Dimensions
1.3.6 Compliance
1.3.7 Qualifications
1.3.7.1 Engineer and Technician
1.3.7.2 Installer
1.3.7.3 Design Services
1.4 SYSTEM DESIGN
1.4.1 Operation
1.4.2 Operational Features
1.4.3 Alarm Functions
1.4.4 Primary Power
1.4.5 Battery Backup Power
1.4.6 Interface With Other Equipment
1.5 TECHNICAL DATA AND COMPUTER SOFTWARE
1.6 DELIVERY AND STORAGE

PART 2 PRODUCTS

2.1 CONTROL PANEL
2.1.1 Remote System Trouble Audible/Visual Appliance
2.1.2 Circuit Connections
2.1.3 System Expansion and Modification Capabilities
2.2 STORAGE BATTERIES
2.3 BATTERY CHARGER
2.4 MANUAL FIRE ALARM STATIONS
2.5 FIRE DETECTING DEVICES
2.5.1 Heat Detectors
2.5.1.1 Fixed Temperature Detectors
2.5.2 Smoke Detectors
2.5.2.1 Photoelectric Detectors
2.5.2.2 Duct Detectors
2.6 NOTIFICATION APPLIANCES
2.6.1 Alarm Bells
2.6.2 Visual Notification Appliances
2.6.3 Combination Audible/Visual Notification Appliances
2.7 FIRE DETECTION AND ALARM SYSTEM PERIPHERAL EQUIPMENT
2.7.1 Conduit

2.7.2 Wiring
2.7.3 Special Tools and Spare Parts
2.8 TRANSMITTERS
2.8.1 Radio Alarm Transmitters
2.8.1.1 Transmitter Power Supply
2.8.1.2 Radio Alarm Transmitter Housing
2.8.1.3 Antenna

PART 3 EXECUTION

3.1 INSTALLATION
3.1.1 Power Supply for the System
3.1.2 Wiring
3.1.3 Control Panel
3.1.4 Detectors
3.1.5 Notification Appliances
3.2 OVERVOLTAGE AND SURGE PROTECTION
3.2.1 Power Line Surge Protection
3.2.2 Low Voltage DC Circuits Surge Protection
3.3 GROUNDING
3.4 SUPERVISING STATION PROVISIONS
3.4.1 Revisions to Existing Facilities
3.4.2 Additions to Existing Facilities
3.5 TESTING
3.5.1 Preliminary Tests
3.5.2 Acceptance Test
3.6 TRAINING

-- End of Section Table of Contents --

SECTION 13850A

FIRE DETECTION AND ALARM SYSTEM, DIRECT CURRENT LOOP
**02/02**

PART 1 GENERAL

1.1 REFERENCES

The publications listed below form a part of this specification to the extent referenced. The publications are referred to in the text by basic designation only.

AMERICAN NATIONAL STANDARDS INSTITUTE (ANSI)

| | |
|---|---|
| ANSI S3.41 | (1990; R 1996) Audible Emergency Evacuation Signal |

INSTITUTE OF ELECTRICAL AND ELECTRONICS ENGINEERS (IEEE)

| | |
|---|---|
| IEEE C62.41 | (1991; R 1995) Surge Voltages in Low-Voltage AC Power Circuits |

NATIONAL FIRE PROTECTION ASSOCIATION (NFPA)

| | |
|---|---|
| NFPA 1221 | (1999) Installation, Maintenance and Use of Public Fire Service Communication Systems |
| NFPA 70 | (2002) National Electrical Code |
| NFPA 72 | (1999) National Fire Alarm Code |
| NFPA 90A | (1999) Installation of Air Conditioning and Ventilating Systems |

U.S. NATIONAL ARCHIVES AND RECORDS ADMINISTRATION (NARA)

| | |
|---|---|
| 47 CFR 15 | Radio Frequency Devices |

UNDERWRITERS LABORATORIES (UL)

| | |
|---|---|
| UL 1242 | (1996; Rev Mar 1998) Intermediate Metal Conduit |
| UL 1971 | (1995; Rev thru Apr 1999) Signaling Devices for the Hearing Impaired |
| UL 268 | (1996; Rev thru Jan 1999) Smoke Detectors for Fire Protective Signaling Systems |
| UL 268A | (1998) Smoke Detectors for Duct Application |
| UL 38 | (1999) Manually Actuated Signaling Boxes for Use with Fire-Protective Signaling |

| | |
|---|---|
| | Systems |
| UL 464 | (1996; Rev thru May 1999) Audible Signal Appliances |
| UL 521 | (1999) Heat Detectors for Fire Protective Signaling Systems |
| UL 6 | (1997) Rigid Metal Conduit |
| UL 797 | (1993; Rev thru Mar 1997) Electrical Metallic Tubing |
| UL 864 | (1996; Rev thru Mar 1999) Control Units for Fire Protective Signaling Systems |

## 1.2 SUBMITTALS

Government approval is required for submittals with a "G" designation; submittals not having a "G" designation are for information only. When used, a designation following the "G" designation identifies the office that will review the submittal for the Government. The following shall be submitted in accordance with Section 01330 SUBMITTAL PROCEDURES:

SD-02 Shop Drawings

Fire Alarm Reporting System; G-AO

Detail drawings, prepared and signed by a Registered Professional Engineer or a NICET Level 3 Fire Alarm Technician, consisting of a complete list of equipment and material, including manufacturer's descriptive and technical literature, catalog cuts, and installation instructions. Note that the contract drawings show layouts based on typical detectors. The Contractor shall check the layout based on the actual detectors to be installed and make any necessary revisions in the detail drawings. The detail drawings shall also contain complete wiring and schematic diagrams for the equipment furnished, equipment layout, and any other details required to demonstrate that the system has been coordinated and will properly function as a unit. Detailed point-to-point wiring diagram shall be prepared and signed by a Registered Professional Engineer or a NICET Level 3 Fire Alarm Technician showing points of connection. Diagram shall include connections between system devices, appliances, control panels, supervised devices, and equipment that is activated or controlled by the panel.

SD-03 Product Data

Storage Batteries; G-AO

Substantiating battery calculations for supervisory and alarm power requirements. Ampere-hour requirements for each system component and each panel component, and the battery recharging period shall be included.

Wiring; G-AO

Voltage drop calculations for notification appliance circuits to

indicate that sufficient voltage is available for proper appliance operation.

Spare Parts;

Spare parts data for each different item of material and equipment specified, not later than 3 months prior to the date of beneficial occupancy. Data shall include a complete list of parts and supplies with the current unit prices and source of supply and a list of the parts recommended by the manufacturer to be replaced after 1 year of service.

Technical Data and Computer Software; G-AO

Technical data which relates to computer software.

Training; G-AO

Lesson plans, operating instructions, maintenance procedures, and training data, furnished in manual format, for the training courses. The operations training shall familiarize designated government personnel with proper operation of the fire alarm system. The maintenance training course shall provide the designated government personnel adequate knowledge required to diagnose, repair, maintain, and expand functions inherent to the system.

Testing; G-AO

Detailed test procedures, prepared and signed by a Registered Professional Engineer or a NICET Level 3 Fire Alarm Technician, for the fire detection and alarm system 60 days prior to performing system tests.

SD-06 Test Reports

Testing; G-AO

Test reports, in booklet form, showing field tests performed to prove compliance with the specified performance criteria, upon completion and testing of the installed system. Each test report shall document readings, test results and indicate the final position of controls. The Contractor shall include the NFPA 72 Certificate of Completion and NFPA 72 Inspection and Testing Form, with the appropriate test reports.

SD-07 Certificates

Equipment; G-AO

Certified copies of current approvals or listings issued by an independent test lab if not listed by UL, FM or other nationally recognized testing laboratory, showing compliance with specified NFPA standards.

Qualifications; G-AO

Proof of qualifications for required personnel. The installer shall submit proof of experience for the Professional Engineer,

fire alarm technician, and the installing company.

SD-10 Operation and Maintenance Data

Technical Data and Computer Software; G-AO

Six copies of operating instructions outlining step-by-step procedures required for system startup, operation, and shutdown. The instructions shall include the manufacturer's name, model number, service manual, parts list, and complete description of equipment and their basic operating features. Six copies of maintenance instructions listing routine maintenance procedures, possible breakdowns and repairs, and troubleshooting guide. The instructions shall include conduit layout, equipment layout and simplified wiring, and control diagrams of the system as installed. The instructions shall include the information provided in paragraph TECHNICAL DATA AND COMPUTER SOFTWARE. The instructions shall include complete procedures for system revision and expansion, detailing both equipment and software requirements. Original and backup copies of all software delivered for this project shall be provided, on each type of media utilized. Instructions shall be approved prior to training.

## 1.3 GENERAL REQUIREMENTS

### 1.3.1 Standard Products

Material and equipment shall be the standard products of a manufacturer regularly engaged in the manufacture of the products for at least 2 years prior to bid opening. Equipment shall be supported by a service organization that can provide service within 24 hours of notification.

### 1.3.2 Nameplates

Major components of equipment shall have the manufacturer's name, address, type or style, voltage and current rating, and catalog number on a noncorrosive and nonheat-sensitive plate which is securely attached to the equipment.

### 1.3.3 Keys and Locks

Locks shall be keyed alike. Four keys for the system shall be provided.

### 1.3.4 Tags

Tags with stamped identification number shall be furnished for keys and locks.

### 1.3.5 Verification of Dimensions

After becoming familiar with details of the work, the Contractor shall verify dimensions in the field and shall advise the Contracting Officer of any discrepancy before performing the work.

### 1.3.6 Compliance

The fire detection and alarm system and the central reporting system shall be configured in accordance with NFPA 72; exceptions are acceptable as directed by the Contracting Officer. The equipment furnished shall be

compatible and be UL listed, FM approved, or approved or listed by a nationally recognized testing laboratory in accordance with the applicable NFPA standards.

1.3.7 Qualifications

1.3.7.1 Engineer and Technician

a. Registered Professional Engineer with verification of experience and at least 4 years of current experience in the design of the fire protection and detection systems.

b. National Institute for Certification in Engineering Technologies (NICET) qualifications as an engineering technician in fire alarm systems program with verification of experience and current NICET certificate.

c. The Registered Professional Engineer may perform all required items under this specification. The NICET Fire Alarm Technician shall perform only the items allowed by the specific category of certification held.

1.3.7.2 Installer

The installing Contractor shall provide the following: Fire Alarm Technicians to perform the installation of the system. A Fire Alarm Technician with a minimum of 4 years of experience shall perform/supervise the installation of the fire alarm system. Fire Alarm technicians with a minimum of 2 years of experience shall be utilized to assist in the installation and terminate fire alarm devices, cabinets and panels. An electrician shall be allowed to install wire or cable and to install conduit for the fire alarm system. The Fire Alarm technicians installing the equipment shall be factory trained in the installation, adjustment, testing, and operation of the equipment specified herein and on the drawings.

1.3.7.3 Design Services

Installations requiring designs or modifications of fire detection, fire alarm, or fire suppression systems shall require the services and review of a qualified fire protection engineer. For the purposes of meeting this requirement, a qualified fire protection engineer is defined as an individual meeting one of the following conditions:

a. An engineer having a Bachelor of Science or Masters of Science Degree in Fire Protection Engineering from an accredited university engineering program, plus a minimum of 2 years' work experience in fire protection engineering.

b. A registered professional engineer (P.E.) in fire protection engineering.

c. A registered PE in a related engineering discipline and member grade status in the National Society of Fire Protection Engineers.

d. An engineer with a minimum of 10 years' experience in fire protection engineering and member grade status in the National Society of Fire Protection Engineers

## 1.4 SYSTEM DESIGN

### 1.4.1 Operation

The fire alarm and detection system shall be a complete, supervised fire alarm reporting system. The system shall be activated into the alarm mode by actuation of any alarm initiating device. The system shall remain in the alarm mode until the initiating device is reset and the fire alarm control panel is reset and restored to normal. Alarm initiating devices shall be connected to initiating device circuits (IDC), Style D, in accordance with NFPA 72. Alarm notification appliances shall be connected to notification appliance circuits (NAC), Style Z in accordance with NFPA 72. A looped conduit system shall be provided so that if the conduit and all conductors within are severed at any point, all IDC, or NAC will remain functional. The conduit loop requirement is not applicable to the signal transmission link from the local panels (at the protected premises) to the Supervising Station (fire station, fire alarm central communication center). Textual, audible, and visual appliances and systems shall comply with NFPA 72. Fire alarm system components requiring power, except for the control panel power supply, shall operate on 24 Volts dc.

### 1.4.2 Operational Features

The system shall have the following operating features:

a. Monitor electrical supervision of alarm IDC and NAC. Smoke detectors shall have combined alarm initiating and power circuits.

b. Monitor electrical supervision of the primary power (ac) supply, battery voltage, placement of alarm zone module (card, PC board) within the control panel, and transmitter tripping circuit integrity.

c. A trouble buzzer and trouble light emitting diode (LED) to activate upon a single break, open, or ground fault condition which prevents the required normal operation of the system. The trouble signal shall also operate upon loss of primary power (ac) supply, low battery voltage, removal of alarm zone module (card, PC board), and disconnection of the circuit used for transmitting alarm signals off-premises. A trouble alarm silence switch shall be provided which will silence the trouble buzzer, but will not extinguish the trouble indicator LED. Subsequent trouble and supervisory alarms shall sound the trouble signal until silenced. After the system returns to normal operating conditions, the trouble buzzer shall again sound until the silencing switch returns to normal position, unless automatic trouble reset is provided.

d. A one person test mode. Activating an initiating device in this mode will activate an alarm for a short period of time, then automatically reset the alarm, without activating the transmitter during the entire process.

e. A transmitter disconnect switch to allow testing and maintenance of the system without activating the transmitter but providing a trouble signal when disconnected and a restoration signal when reconnected.

f. Evacuation alarm silencing switch which, when activated, will

silence alarm devices, but will not affect the zone indicating LED/LCD nor the operation of the transmitter. This switch shall be over-ridden upon activation of a subsequent alarm from an unalarmed zone and the NAC devices will be activated.

g. Electrical supervision for circuits used for supervisory signal services (i.e., sprinkler systems, valves, etc.). Supervision shall detect any open, short, or ground.

h. Confirmation or verification modules for smoke detection initiating circuits. The modules shall interrupt the transmission of an alarm signal to the system control panel for a factory preset period. This interruption period shall be adjustable from 1 to 60 seconds and be factory set at 20 seconds. Immediately following the interruption period, a confirmation period shall be in effect during which time an alarm signal, if present, will be sent immediately to the control panel. Fire alarm devices, other than smoke detectors, will be prohibited on circuits controlled by confirmation or verification modules.

i. The fire alarm control panel shall provide supervised relays for HVAC shutdown. An override at the HVAC panel shall not be provided.

j. Provide one person test mode - Activating an initiating device in this mode will activate an alarm for a short period of time, then automatically reset the alarm, without activating the transmitter during the entire process.

k. The fire alarm control panel shall provide the required monitoring and supervised control outputs needed to accomplish elevator recall.

l. The fire alarm control panel shall provide the required modules to monitor and control the fire sprinkler system, or other fire protection extinguishing system.

m. Zones for alarm IDC and NAC shall be arranged as indicated on the contract drawings.

n. The fire alarm control panel shall be readily capable of future expansion and modification by qualified technicians. Examples of required changes are: adding or deleting devices or zones; changing system responses to particular input signals; programming certain input signals to activate auxiliary devices.

### 1.4.3 Alarm Functions

An alarm condition on a circuit shall automatically initiate the following functions:

a. Transmission of a signal over the station radio fire reporting system. The signal shall be common for all zones .

b. Visual indications of the alarmed zones on the fire alarm control panel annunciator .

c. Continuous sounding or operation of alarm notification appliances throughout the building as required by ANSI S3.41.

Operation of the smoke control system.

e. Deactivation of the air handling units throughout the building.

1.4.4 Primary Power

Operating power shall be provided as required by paragraph Power Supply for the System. Transfer from normal to emergency power or restoration from emergency to normal power shall be fully automatic and not cause transmission of a false alarm. Loss of ac power shall not prevent transmission of a signal via the fire reporting system upon operation of any initiating circuit.

1.4.5 Battery Backup Power

Battery backup power shall be through use of rechargeable, sealed-type storage batteries and battery charger.

1.4.6 Interface With Other Equipment

Interfacing components shall be furnished as required to connect to subsystems or devices which interact with the fire alarm system, such as supervisory or alarm contacts in suppression systems, operating interfaces for smoke control systems, door releases, etc.

1.5 TECHNICAL DATA AND COMPUTER SOFTWARE

Technical data and computer software (meaning technical data which relates to computer software) which is specifically identified in this project, and which may be defined/required in other specifications, shall be delivered in accordance with the CONTRACT CLAUSES, and in accordance with the Contract Data Requirements List, DD Form 1423. Data delivered shall be identified by reference to the particular specification paragraph against which it is furnished. Data to be submitted shall include complete system, equipment, and software descriptions. Descriptions shall show how the equipment will operate as a system to meet the performance requirements of this contract. The data package shall also include the following:

(1) Identification of programmable portions of system equipment and capabilities.

(2) Description of system revision and expansion capabilities and methods of implementation detailing both equipment and software requirements.

(3) Provision of operational software data on all modes of programmable portions of the fire alarm and detection system.

(4) Description of Fire Alarm Control Panel equipment operation.

(5) Description of auxiliary and remote equipment operations.

(6) Library of application software.

(7) Operation and maintenance manuals described under SD-19 in the SUBMITTALS paragraph.

## 1.6 DELIVERY AND STORAGE

Equipment delivered and placed in storage shall be stored with protection from the weather, humidity and temperature variation, dirt, dust, and any other contaminants.

# PART 2 PRODUCTS

## 2.1 CONTROL PANEL

Control panel shall comply with the applicable requirements of UL 864. Panel shall be modular, installed in a surface mounted steel cabinet with hinged door and cylinder lock. Control panel shall be a clean, uncluttered, and orderly assembled panel containing components and equipment required to provide the specified operating and supervisory functions of the system. The panel shall have prominent rigid plastic, phenolic or metal identification plates for LEDs, zones, controls, meters, fuses, and switches. Nameplates for fuses shall also include ampere rating. Separate alarm and trouble LEDs shall be provided for each zone alarm. These LEDs shall be located on the exterior of the cabinet door or be visible through the cabinet door. Control panel switches shall be within the locked cabinet. A suitable means (single operation) shall be provided for testing the control panel visual indicating devices (meters or LEDs). Meters and LEDs shall be plainly visible when the cabinet door is closed. Signals and LEDs shall be provided to indicate by zone any alarm, supervisory or trouble condition on the system. Each IDC shall be powered and supervised so that a signal on one zone does not prevent the receipt of signals from other zones. Loss of power, including batteries, shall not require the reloading of a program. Upon restoration of power, startup shall be automatic, and shall not require any manual operation. The loss of primary power or the sequence of applying primary or emergency power shall not affect the transmission of alarm, supervisory or trouble signals. Visual annunciators shall be provided for each active zone and spare zone. Six spare zones shall be provided . Each LED shall provide specific identification of the zone by means of a permanently attached rigid plastic, phenolic, or metal sign with either raised or engraved letters. Zone identification shall consist of a word description of the zone. Cabinets shall be provided with ample gutter space to allow proper clearance between the cabinet and live parts of the panel equipment. If more than one modular unit is required to form a control panel, the units shall be installed in a single cabinet large enough to accommodate units. Cabinets shall be painted red .

### 2.1.1 Remote System Trouble Audible/Visual Appliance

Audible appliance shall have a minimum sound level output rating of 85 dBA at 10 feet and operate in conjunction with the panel's integral trouble signal. The audible device shall be silenced by the system trouble silence switch located at the remote location, but shall not extinguish the visual indicator. A rigid plastic, phenolic or metal identification sign which reads "Fire Alarm System Trouble" shall be provided at the audible appliance. The visual appliance located with the audible appliance shall not be extinguished until the trouble has been cleared.

### 2.1.2 Circuit Connections

Circuit conductors entering or leaving the panel shall be connected to screw-type terminals with each conductor and terminal marked for identification.

### 2.1.3 System Expansion and Modification Capabilities

Any equipment and software needed by qualified technicians to implement future changes to the fire alarm system shall be provided as part of this contract.

## 2.2 STORAGE BATTERIES

Storage batteries shall be provided and shall be 24 Vdc sealed, lead-calcium type requiring no additional water. The batteries shall have ample capacity, with primary power disconnected, to operate the fire alarm system for a period of 72 hours. Following this period of battery operation, the batteries shall have ample capacity to operate all components of the system, including all alarm signaling devices in the total alarm mode for a minimum period of 15 minutes. Batteries shall be located at the bottom of the panel . Batteries shall be provided with overcurrent protection in accordance with NFPA 72.

## 2.3 BATTERY CHARGER

Battery charger shall be completely automatic, 24 Vdc with high/low charging rate, capable of restoring the batteries from full discharge (18 Volts dc) to full charge within 48 hours. A pilot light indicating when batteries are manually placed on a high rate of charge shall be provided as part of the unit assembly, if a high rate switch is provided. Charger shall be located in control panel cabinet.

## 2.4 MANUAL FIRE ALARM STATIONS

Manual fire alarm stations shall conform to the applicable requirements of UL 38. Manual stations shall be connected into signal line circuits. Stations shall be installed on flush mounted outlet boxes. Manual stations shall be mounted at 48 inches. Stations shall be double action type. Stations shall be finished in red, with raised letter operating instructions of contrasting color. Stations requiring the breaking of glass or plastic panels for operation are not acceptable. Stations employing glass rods are not acceptable. The use of a key or wrench shall be required to reset the station. Gravity or mercury switches are not acceptable. Switches and contacts shall be rated for the voltage and current upon which they operate. Stations shall have a separate screw terminal for each conductor.

## 2.5 FIRE DETECTING DEVICES

Fire detecting devices shall comply with the applicable requirements of NFPA 72, NFPA 90A, UL 268, UL 268A, and UL 521. The detectors shall be provided as indicated. Detector base shall have screw terminals for making connections. No solder connections will be allowed. Detectors located in concealed locations (above ceiling, raised floors, etc.) shall have a remote visible indicator LED/LCD. Installed devices shall conform to the NFPA 70 hazard classification of the area where devices are to be installed.

### 2.5.1 Heat Detectors

Heat detectors shall be designed for detection of fire by fixed temperature . Heat detector spacing shall be rated in accordance with UL 521. Detectors located in areas subject to moisture, exterior atmospheric conditions, or hazardous locations as defined by NFPA 70 and as shown on drawings, shall

be types approved for such locations. Heat detectors located in attic spaces or similar concealed spaces below the roof shall be intermediate temperature rated.

2.5.1.1 Fixed Temperature Detectors

Detectors shall be designed for semi-flush outlet box mounting and supported independently of wiring connections. Detectors shall be designed to detect high heat. The detectors shall have a specific temperature setting of 135 degrees F. . The UL 521 test rating for the fixed temperature detectors shall be rated for 15 by 15 ft.

2.5.2 Smoke Detectors

Smoke detectors shall be designed for detection of abnormal smoke densities. Smoke detectors shall be photoelectric type. Detectors shall contain a visible indicator LED that shows when the unit is in alarm condition. Detectors shall not be adversely affected by vibration or pressure. Detectors shall be the plug-in type in which the detector base contains terminals for making wiring connections. Detectors that are to be installed in concealed (above false ceilings, etc.) locations shall be provided with a remote indicator LED suitable for mounting in a finished, visible location.

2.5.2.1 Photoelectric Detectors

Detectors shall operate on a light scattering concept using an LED light source. Failure of the LED shall not cause an alarm condition. Detectors shall be factory set for sensitivity and shall require no field adjustments of any kind. Detectors shall have an obscuration rating in accordance with UL 268.

2.5.2.2 Duct Detectors

Duct-mounted photoelectric smoke detectors shall be furnished and installed where indicated and in accordance with NFPA 90A. Units shall consist of a smoke detector as specified in paragraph Photoelectric Detectors, mounted in a special housing fitted with duct sampling tubes. Detector circuitry shall be mounted in a metallic enclosure exterior to the duct. Detectors shall have a manual reset. Detectors shall be rated for air velocities that include air flows between 500 and 4000 fpm. Detectors shall be powered from the fire alarm panel. Sampling tubes shall run the full width of the duct. The duct detector package shall conform to the requirements of NFPA 90A, UL 268A, and shall be UL listed for use in air-handling systems. The control functions, operation, reset, and bypass shall be controlled from the fire alarm control panel. Lights to indicate the operation and alarm condition; and the test and reset buttons shall be visible and accessible with the unit installed and the cover in place. Detectors mounted above 6 feet and those mounted below 6 feet that cannot be easily accessed while standing on the floor, shall be provided with a remote detector indicator panel containing test and reset switches. Remote lamps and switches as well as the affected fan units shall be properly identified in etched plastic placards. Detectors shall have auxiliary contacts to provide control, interlock, and shutdown functions specified in Section 15950A HEATING, VENTILATING AND AIR CONDITIONING (HVAC) CONTROL SYSTEMS. The detectors shall be supplied by the fire alarm system manufacturer to ensure complete system compatibility.

## 2.6 NOTIFICATION APPLIANCES

Audible appliances shall conform to the applicable requirements of UL 464. Devices shall be connected into notification appliance circuits. Devices shall have a separate screw terminal for each conductor. Audible appliances shall generate a unique audible sound from other devices provided in the building and surrounding area. Surface mounted audible appliances shall be painted red . Recessed audible appliances shall be installed with a grill that is painted red .

### 2.6.1 Alarm Bells

Bells shall be surface mounted with the matching mounting back box recessed. Bells shall be suitable for use in an electrically supervised circuit. Bells shall be the underdome type producing a minimum output rating of 85 dBA at 10 feet. Bells used in exterior locations shall be specifically listed or approved for outdoor use and be provided with metal housing and protective grilles. Single stroke, electrically operated, supervised, solenoid bells shall be used for coded applications.

### 2.6.2 Visual Notification Appliances

Visual notification appliances shall conform to the applicable requirements of UL 1971. Appliances shall have clear high intensity optic lens, xenon flash tubes, and output white light. Strobe flash rate shall be between 1 to 3 flashes per second and a minimum of 75 candela. Strobe shall be surface mounted.

### 2.6.3 Combination Audible/Visual Notification Appliances

Combination audible/visual notification appliances shall provide the same requirements as individual units, except that they shall mount as a unit in standard backboxes. Units shall be factory assembled. Any other audible notification appliance employed in the fire alarm systems shall be approved by the Contracting Officer.

## 2.7 FIRE DETECTION AND ALARM SYSTEM PERIPHERAL EQUIPMENT

### 2.7.1 Conduit

Conduit and fittings shall comply with UL 6, UL 1242 and UL 797.

### 2.7.2 Wiring

Wiring shall conform to NFPA 70. Wiring for 120 Vac power shall be No. 12 AWG minimum. Wiring for Fire Alarm circuits shall be No. 14 AWG minimum. Voltages shall not be mixed in any junction box, housing, or device, except those containing power supplies and control relays. Wiring shall conform to NFPA 70. System field wiring shall be solid copper and installed in metallic conduit or electrical metallic tubing, except rigid plastic conduit may be used under slab-on-grade. Conductors shall be color coded. Conductors used for the same functions shall be similarly color coded. Wiring code color shall remain uniform throughout the circuit. Pigtail or T-tap connections to initiating device circuits, supervisory alarm circuits, and notification appliance circuits are prohibited.

### 2.7.3 Special Tools and Spare Parts

Software, connecting cables and proprietary equipment, necessary for the

maintenance, testing, and reprogramming of the equipment shall be furnished to the Contracting Officer. Two spare fuses of each type and size required shall be furnished. Two percent of the total number of each different type of detector, but no less than two each, shall be furnished. Spare fuses shall be mounted in the fire alarm panel.

## 2.8 TRANSMITTERS

### 2.8.1 Radio Alarm Transmitters

Transmitters shall be compatible with proprietary supervising station receiving equipment. Each radio alarm transmitter shall be the manufacturer's recognized commercial product, completely assembled, wired, factory tested, and delivered ready for installation and operation. Transmitters shall be provided in accordance with applicable portions of NFPA 72, NFPA 1221, and 47 CFR 15. Transmitter electronics module shall be contained within the physical housing as an integral, removable assembly. The proprietary supervising station receiving equipment is Monaco and the transceiver shall be fully compatible with this equipment. At the Contractor's option, and if UL listed, the transmitter may be housed in the same panel as the fire alarm control panel.

#### 2.8.1.1 Transmitter Power Supply

Each radio alarm transmitter shall be powered by a combination of locally available 120-volt ac power and a sealed, lead-calcium battery.

a. Operation: Each transmitter shall operate from 120-volt ac power. In the event of 120-volt ac power loss, the transmitter shall automatically switch to battery operation. Switchover shall be accomplished with no interruption of protective service, and shall automatically transmit a trouble message. Upon restoration of ac power, transfer back to normal ac power supply shall also be automatic.

b. Battery Power: Transmitter standby battery capacity shall provide sufficient power to operate the transmitter in a normal standby status for a minimum of 72 hours and be capable of transmitting alarms during that period.

#### 2.8.1.2 Radio Alarm Transmitter Housing

Transmitter housing shall be NEMA Type 1. The housing shall contain a lock that is keyed identical to the fire alarm system for the building. Radio alarm transmitter housing shall be factory painted with a suitable priming coat and not less than two coats of a hard, durable weatherproof enamel.

#### 2.8.1.3 Antenna

The Contractor shall provide omnidirectional, coaxial, halfwave dipole antennas for radio alarm transmitters with a driving point impedance to match transmitter output. The antenna and antenna mounts shall be corrosion resistant and designed to withstand wind velocities of 100 mph. Antennas shall not be mounted to any portion of the building roofing system.

# PART 3 EXECUTION

## 3.1 INSTALLATION

All work shall be installed as shown, and in accordance with NFPA 70 and NFPA 72, and in accordance with the manufacturer's diagrams and recommendations, unless otherwise specified. Smoke detectors shall not be installed until construction is essentially complete and the building has been thoroughly cleaned.

### 3.1.1 Power Supply for the System

A single dedicated circuit connection for supplying power from a branch circuit to each building fire alarm system shall be provided. The power shall be supplied as shown on the drawings. The power supply shall be equipped with a locking mechanism and marked in red with the words "FIRE ALARM CIRCUIT CONTROL".

### 3.1.2 Wiring

Conduit size for wiring shall be in accordance with NFPA 70. Wiring for the fire alarm system shall not be installed in conduits, junction boxes, or outlet boxes with conductors of lighting and power systems. Not more than two conductors shall be installed under any device screw terminal. The wires under the screw terminal shall be straight when placed under the terminal then clamped in place under the screw terminal. The wires shall be broken and not twisted around the terminal. Circuit conductors entering or leaving any mounting box, outlet box enclosure, or cabinet shall be connected to screw terminals with each terminal and conductor marked in accordance with the wiring diagram. Connections and splices shall be made using screw terminal blocks. The use of wire nut type connectors in the system is prohibited. Wiring within any control equipment shall be readily accessible without removing any component parts. The fire alarm equipment manufacturer's representative shall be present for the connection of wiring to the control panel.

### 3.1.3 Control Panel

The control panel and its assorted components shall be mounted so that no part of the enclosing cabinet is less than 12 inches nor more than 78 inches above the finished floor. Manually operable controls shall be between 36 and 42 inches above the finished floor. Panel shall be installed to comply with the requirements of UL 864.

### 3.1.4 Detectors

Detectors shall be located and installed in accordance with NFPA 72. Detectors shall be connected into signal line circuits or initiating device circuits as indicated on the drawings. Detectors shall be at least 12 inches from any part of any lighting fixture. Detectors shall be located at least 3 feet from diffusers of air handling systems. Each detector shall be provided with appropriate mounting hardware as required by its mounting location. Detectors which mount in open space shall be mounted directly to the end of the stubbed down rigid conduit drop. Conduit drops shall be firmly secured to minimize detector sway. Where length of conduit drop from ceiling or wall surface exceeds 3 feet, sway bracing shall be provided. Detectors installed in concealed locations (above ceiling, raised floors, etc.) shall have a remote visible indicator LED/LCD .

### 3.1.5 Notification Appliances

Notification appliances shall be mounted 80 inches above the finished floor or 6 inches below the ceiling, whichever is lower.

## 3.2 OVERVOLTAGE AND SURGE PROTECTION

### 3.2.1 Power Line Surge Protection

All equipment connected to alternating current circuits shall be protected from surges per IEEE C62.41 B3 combination waveform and NFPA 70. Fuses shall not be used for surge protection. The surge protector shall be rated for a maximum let thru voltage of 350 Volts ac (line-to-neutral) and 350 Volt ac (neutral-to-ground).

### 3.2.2 Low Voltage DC Circuits Surge Protection

All IDC, NAC, and communication cables/conductors, except fiber optics, shall have surge protection installed at each point where it exits or enters a building. Equipment shall be protected from surges per IEEE C62.41 B3 combination waveform and NFPA 70. The surge protector shall be rated to protect the 24 Volt dc equipment. The maximum dc clamping voltages shall be 36 V (line-to-ground) and 72 Volt dc (line-to-line).

## 3.3 GROUNDING

Grounding shall be provided by connecting to building ground system.

## 3.4 SUPERVISING STATION PROVISIONS

The proprietary type Supervising Station (PSS) is located in building 367 The supervising equipment is existing and consists of the following brands and models: , signal reporting components Monaco .

### 3.4.1 Revisions to Existing Facilities

Existing supervising components shall be modified as indicated on the drawings and programming shall be updated if required to accommodate the revised configuration. Acceptance testing shall include procedures that would demonstrate that operation of existing equipment has not been degraded and that the revised configuration plus interfacing components operate compatibly with the new fire alarm system at the protected premises. Work on existing equipment shall be performed in accordance with the manufacturer's instructions or under supervision of the manufacturer's representative.

### 3.4.2 Additions to Existing Facilities

Supplemental components shall be added to the existing supervising equipment as required to accommodate the new fire alarm system to be installed at the protected premises . All present functions shall be extended, including recording and storage in memory, and programming shall be updated if required to accommodate the revised configuration. Acceptance testing shall include procedures that would demonstrate that operation of existing equipment has not been degraded and that the expanded configuration operates compatibly with the new fire alarm system.

## 3.5 TESTING

The Contractor shall notify the Contracting Officer at least 10 days before the preliminary and acceptance tests are to be conducted. The tests shall be performed in accordance with the approved test procedures in the presence of the Contracting Officer. The control panel manufacturer's representative shall be present to supervise tests. The Contractor shall furnish instruments and personnel required for the tests.

### 3.5.1 Preliminary Tests

Upon completion of the installation, the system shall be subjected to functional and operational performance tests including tests of each installed initiating and notification appliance, when required. Tests shall include the meggering of system conductors to determine that the system is free from grounded, shorted, or open circuits. The megger test shall be conducted prior to the installation of fire alarm equipment. If deficiencies are found, corrections shall be made and the system shall be retested to assure that it is functional. After completing the preliminary testing the Contractor shall complete and submit the NFPA 72, Certificate of Completion.

### 3.5.2 Acceptance Test

Acceptance testing shall not be performed until the Contractor has completed and submitted the Certificate of Completion. Testing shall be in accordance with NFPA 72. The recommended tests in NFPA 72 shall be considered mandatory and shall verify that previous deficiencies have been corrected. The Contractor shall complete and submit the NFPA 72, Inspection and Testing Form. The test shall include all requirements of NFPA 72 and the following:

a. Test of each function of the control panel.

b. Test of each circuit in both trouble and normal modes.

c. Tests of each alarm initiating devices in both normal and trouble conditions.

d. Tests of each control circuit and device.

e. Tests of each alarm notification appliance.

f. Tests of the battery charger and batteries.

g. Complete operational tests under emergency power supply.

h. Visual inspection of wiring connections.

i. Opening the circuit at each alarm initiating device and notification appliance to test the wiring supervisory feature.

j. Ground fault.

k. Short circuit faults.

l. Stray voltage.

m. Loop resistance.

## 3.6 TRAINING

Training course shall be provided for the operations and maintenance staff. The course shall be conducted in the building where the system is installed or as designated by the Contracting Officer. The training period for systems operation shall consist of 1 training days (8 hours per day) and shall start after the system is functionally completed but prior to final acceptance tests. The training period for systems maintenance shall consist of 2 training days (8 hours per day) and shall start after the system is functionally completed but prior to final acceptance tests. The instructions shall cover items contained in the operating and maintenance instructions. In addition, training shall be provided on performance of expansions or modifications to the fire detection and alarm system.

-- End of Section --

SECTION TABLE OF CONTENTS

DIVISION 13 - SPECIAL CONSTRUCTION

SECTION 13852A

FIRE ALARM REPORTING SYSTEM, RADIO TYPE

**11/97**

PART 1 GENERAL

1.1 REFERENCES
1.2 GENERAL REQUIREMENTS
1.2.1 Standard Products
1.2.2 Nameplates
1.2.3 Tags
1.2.4 Keys and Locks
1.2.5 Verification of Dimensions
1.2.6 Compliance
1.3 SUBMITTALS
1.4 DELIVERY AND STORAGE
1.5 SYSTEM OPERATION
1.6 ELECTRICAL SUPERVISION

PART 2 PRODUCTS

2.1 RADIO FIRE ALARM TRANSMITTER (TRANSCEIVER)
2.1.1 Frequency Allocation
2.1.2 Power Requirements
2.1.2.1 Battery Power
2.1.2.2 Battery Duration
2.1.2.3 Battery Supervision
2.1.3 Functional Requirements
2.1.3.1 Interfacing Indicators and Controls
2.1.3.2 Generation of Signals
2.1.3.3 Power Output
2.1.3.4 Memory
2.1.3.5 Transmission Confirmation
2.1.3.6 Transmitter Identity Code
2.1.3.7 Message Designations
2.1.4 Transmitter Housings
2.1.4.1 Lock
2.1.4.2 Mounting
2.1.4.3 Operating Panel
2.1.4.4 Labeling
2.1.5 Environmental Operating Requirements
2.1.6 Painting
2.2 RADIO TRANSMITTER INTERFACE DEVICE
2.2.1 Enclosure
2.2.2 Indicators
2.2.3 Access
2.2.4 Mounting
2.2.5 Inputs/Outputs
2.3 RADIO FIRE ALARM MONITORING BASE STATION
2.3.1 Receiver (Transceiver) System

2.3.1.1 Transmitter Section
2.3.1.2 Receiver Section
2.3.2 Fire Alarm Console
2.3.2.1 Audible Fire Alarm
2.3.2.2 Visual Display
2.3.2.3 Console Memory
2.3.2.4 Console Supervision
2.3.2.5 Receiver Supervision
2.3.2.6 Manual Battery Test
2.3.2.7 Electrical Connections
2.3.3 Antenna System
2.3.3.1 Grounding Conductors
2.3.3.2 Communication Links
2.4 FIRE ALARM SYSTEM PERIPHERAL EQUIPMENT
2.4.1 Repeaters
2.4.2 Radio Fire Alarm Transmitter Box Location Light
2.4.3 Conduit
2.4.4 Ground Rods
2.4.5 Power Supply
2.4.6 Wiring
2.4.7 Special Tools and Spare Parts

PART 3 EXECUTION

3.1 INSTALLATION
3.1.1 Power Supply for the System
3.1.2 Wiring
3.2 OVERVOLTAGE AND SURGE PROTECTION
3.3 GROUNDING
3.4 TESTING
3.4.1 Performance Testing
3.4.2 Acceptance Test
3.4.3 Training

-- End of Section Table of Contents --

SECTION 13852A

FIRE ALARM REPORTING SYSTEM, RADIO TYPE
**11/97**

PART 1 GENERAL

1.1 REFERENCES

The publications listed below form a part of this specification to the extent referenced. The publications are referred to in the text by basic designation only.

U.S. NATIONAL ARCHIVES AND RECORDS ADMINISTRATION (NARA)

| | |
|---|---|
| 47 CFR 15 | Radio Frequency Devices |

ELECTRONIC INDUSTRIES ALLIANCE (EIA)

| | |
|---|---|
| EIA ANSI/TIA/EIA-222-F | (1996) Structural Standards for Steel Antenna Towers and Antenna Supporting Structures |

INSTITUTE OF ELECTRICAL AND ELECTRONICS ENGINEERS (IEEE)

| | |
|---|---|
| IEEE C62.41 | (1991; R 1995) Surge Voltages in Low-Voltage AC Power Circuits |

NATIONAL ELECTRICAL MANUFACTURERS ASSOCIATION (NEMA)

| | |
|---|---|
| NEMA ICS 1 | (1993) Industrial Control and Systems |

NATIONAL FIRE PROTECTION ASSOCIATION (NFPA)

| | |
|---|---|
| NFPA 70 | (2002) National Electrical Code |
| NFPA 72 | (1999) National Fire Alarm Code |
| NFPA 780 | (1997) Installation of Lightning Protection Systems |

UNDERWRITERS LABORATORIES (UL)

| | |
|---|---|
| UL 6 | (1997) Rigid Metal Conduit |
| UL 467 | (1993; Rev thru Apr 1999) Grounding and Bonding Equipment |
| UL 797 | (1993; Rev thru Mar 1997) Electrical Metallic Tubing |
| UL 1242 | (1996; Rev Mar 1998) Intermediate Metal Conduit |

## 1.2 GENERAL REQUIREMENTS

### 1.2.1 Standard Products

Material and equipment shall be the standard products of a manufacturer regularly engaged in the manufacture of the products and shall essentially duplicate items that have been in satisfactory use for at least 2 years prior to bid opening. Equipment shall be supported by a service organization that can provide service within 24 hours.

### 1.2.2 Nameplates

Major components of equipment shall have the manufacturer's name, address, type or style, voltage and current rating, and catalog number on a noncorrosive and nonheat-sensitive plate which is securely attached to the equipment.

### 1.2.3 Tags

Tags with stamped identification numbers shall be furnished for keys and locks.

### 1.2.4 Keys and Locks

Locks shall be keyed alike.

### 1.2.5 Verification of Dimensions

The Contractor shall become familiar with all details of the work, verify all dimensions in the field, and shall advise the Contracting Officer of any discrepancy before performing the work.

### 1.2.6 Compliance

The central reporting system shall comply with NFPA 72 . The equipment furnished shall be listed by Underwriters Laboratories, or Factory Mutual Engineering and Research, or be approved or listed by a nationally recognized testing laboratory.

## 1.3 SUBMITTALS

Government approval is required for submittals with a "G" designation; submittals not having a "G" designation are for information only. When used, a designation following the "G" designation identifies the office that will review the submittal for the Government. The following shall be submitted in accordance with Section 01330 SUBMITTAL PROCEDURES:

SD-02 Shop Drawings

Fire Alarm Reporting System; G-AE

Detail drawings, signed by the Registered Professional Engineer, consisting of a complete list of equipment and material, including manufacturer's descriptive and technical literature, catalog cuts, and installation instructions. Note that the contract drawings show layouts based on typical detectors. The contractor shall check the layout based on the actual detectors to be installed and make any necessary revisions in the detail drawings. Detail drawings shall also contain complete wiring and schematic diagrams

for the equipment furnished, equipment layout, and any other details required to demonstrate that the system has been coordinated and will properly function as a unit.

Wiring; G-AE

Detail point-to-point wiring diagram, signed by the Registered Professional Engineer, showing all points of connection. Diagram shall include connections between system devices, appliances, control panels, supervised devices, an all equipment that is activated or controlled by the panel.

SD-03 Product Data

Battery; G-AE

Substantiating battery calculations for supervisory and alarm power requirements. Ampere-hour requirements for each system component, each panel component and the battery recharging period shall be included.

Spare Parts.

Spare parts data for each different item of material and equipment specified, after approval of detail drawings, and not later than 1 month prior to the date of beneficial occupancy. Data shall include a complete list of parts and supplies with the current unit prices and source of supply and a list of the parts recommended by the manufacturer to be replaced after 1 year of service.

Installation; G-AE.

Installation qualifications, with verification of experience and license number, of a Registered Professional Engineer with at least 4 years of current experience in the design of fire protection and detection systems. This engineer must perform the various specification items required by this section to be performed by a Registered Professional Engineer.

Fire Alarm Reporting System; G

Six complete copies of operating instructions outlining step-by-step procedures required for system startup, operation, and shutdown. The instructions shall include the manufacturer's name, model number, service manual, parts list, and brief description of all equipment and their basic operating features. Six copies of maintenance instructions listing routine maintenance procedures, possible breakdowns and repairs, and troubleshooting guide. The instructions shall include conduit layout, equipment layout and simplified wiring, and control diagrams of the system as installed. Instructions shall be approved prior to training.

Training;

Training course for the operation and maintenance staff. The course shall be conducted in the building where the system is installed or as designated by the Contracting Officer. The training period shall consist of 1 training days (8 hours per day)

and shall start after the system is functionally completed but prior to final acceptance tests. The instructions shall cover all of the items contained in the operating and maintenance instructions.

Testing; G-AE

Detailed test procedures for the fire alarm reporting system 60 days prior to performing system tests. The test procedures shall be signed by the Registered Professional Engineer.

SD-06 Test Reports

Testing; G-AE.

Test reports in booklet form showing all field tests performed to prove compliance with the specified performance criteria, upon completion and testing of the installed system. Each test report shall document all readings, test results and indicate the final position of controls.

SD-07 Certificates

Equipment; G-AE.

Certified copies of current applicable approvals or listings issued by UL, FM or other nationally recognized testing laboratory showing compliance with applicable NFPA standards.

## 1.4 DELIVERY AND STORAGE

All equipment delivered and placed in storage shall be protected from the weather, humidity and temperature variations, dirt, dust, and other contaminants.

## 1.5 SYSTEM OPERATION

The radio system shall report alarms to the radio fire alarm monitoring base station. The system shall be a completely supervised radio type fire alarm reporting system. The system shall indicate the area of alarm. The radio communication link shall be supervised and operated in accordance with NFPA 72.

## 1.6 ELECTRICAL SUPERVISION

Electrical supervision shall be provided for all circuits and for all positions of interface panel control switches.

# PART 2 PRODUCTS

## 2.1 RADIO FIRE ALARM TRANSMITTER (TRANSCEIVER)

Radio Fire Alarm Transmitter (Transceiver) shall be compatible with the Radio Fire Alarm Monitoring Base Station. The transmitter shall be all solid state and comply with applicable portions of 47 CFR 15 governing type acceptance. All transmitters of a common configuration shall be interchangeable with the other devices furnished by the manufacturer. Each transmitter and interface device shall be the manufacturer's current commercial product completely assembled, wired, tested at the factory, and

delivered ready for installation and operation.

2.1.1 Frequency Allocation

The transmitters shall operate on a frequency of 143.550 MHz.

2.1.2 Power Requirements

Transmitters shall be powered by a combination of locally available 120 Vac, and sealed nickel-cadium or lead-acid type batteries requiring no additional water. Transmitters used in manual street box configuration as indicated shall be powered by battery only. In the event of loss of 120 Vac power, the transmitter shall automatically switch to battery operation. The switchover shall be accomplished with no interruption of protective service, without adversely affecting the battery-powered capabilities, and shall cause the transmission of a trouble message in no less than 5 seconds. Upon restoration of ac power, transfer back to normal ac power supply shall be automatic and the battery shall be recharged. The converter/battery charger shall be installed within the transmitter housing. Power supply transient filtering shall be provided.

2.1.2.1 Battery Power

The battery package shall be capable of supplying all the power requirements for a given transmitter.

2.1.2.2 Battery Duration

Radio fire alarm transmitter standby battery capacity shall provide sufficient power to operate the transmitter in a normal standby status for a minimum of 60 hours and shall be capable of transmitting alarms during that period. The capacity for battery-only powered transmitters shall be 6 months before recharging is necessary.

2.1.2.3 Battery Supervision

Each radio fire alarm transmitter shall constantly monitor and supervise its own battery powered supply. A low-battery condition shall be reported when battery voltage falls below 85 percent of the rated voltage.

2.1.3 Functional Requirements

2.1.3.1 Interfacing Indicators and Controls

Transmitters shall incorporate the provisions for auxiliary interconnection to existing interior alarm systems.

2.1.3.2 Generation of Signals

Each transmitter shall be a standard design which allows the immediate transmission of all initiated signals.

2.1.3.3 Power Output

The radio frequency (RF) power output of each transmitter shall be sufficient for reliable alarm reporting. The minimum RF power output shall be 1 watt.

2.1.3.4 Memory

Transmitters shall have memory capability. Multiple, simultaneous alarms shall not result in the loss of any messages. Messages shall be stored until they are transmitted.

2.1.3.5 Transmission Confirmation

When a signal is initiated at a public box (push button or pull lever), the transmitter shall produce an audible or visual indication that the transmitter is operating and that a signal is being sent.

2.1.3.6 Transmitter Identity Code

Each transmitter shall transmit a distinct identity code number as part of all signals emanating from the transmitter. The identity code shall allow for no less than a four digit code selection and be transmitted not less than three complete rounds (cycles).

2.1.3.7 Message Designations

Each transmitter shall allow as a minimum no less than 10 distinct and individually identifiable message designations as to the types or causes of transmitter actuation.

a. Master Message: Master messages shall be transmitted upon automatic actuation of the transmitter. The building and zone causing actuation shall be individually identified as part of this transmission. The transmitter shall be capable of identifying and transmitting a minimum of 10 master (zone) messages.

b. Test Message: Test message shall be capable of both manual and automatic actuation. When a transceiver method is employed, it shall provide for automatic interrogation at preselected periods or continuous automatic interrogation in accordance with the governing standard. Additionally, transceiver systems shall provide for selective interrogation at times determined by the user. Testing the automatic test actuation shall occur a minimum of once in each 24- hour period, at an optionally preselected time. Stability of the electronic actuating device shall be plus or minus 1 minute per month within the temperature range stipulated for system operation. Actuation of the "Test" message designation, regardless of initiating means, shall cause no less than 1 complete message to be sent.

c. Tamper Message Designation: The tamper message shall be automatically transmitted when a tamper switch is tripped in the transmitter housing.

d. Trouble Message Designation: Trouble message shall be automatically transmitted in the event of a failure in excess of 1 minute of the main operating power source of the transmitter.

2.1.4 Transmitter Housings

The housings on transmitters shall be fabricated from corrosion-resistant cast metal or suitable substitute which has the physical strength sufficient to ward off physical damage normally expected to be received by vandalism. The housing shall be sealed against the entry of moisture,

dust, dirt, insects, and other foreign objects. Exterior housings shall be NEMA 4X.

2.1.4.1 Lock

Internal components shall be protected from vandalism by a tamper-proof lock on the transmitter housing. The housing shall allow access to all internal components for testing, servicing, and replacement at the installation site.

2.1.4.2 Mounting

Transmitter housings shall be designed for universal mounting on walls, poles, or pedestals. Mounting shall utilize either lag bolts, anchor bolts, stainless steel banding, mounting brackets, or a shackle/bolt combination, as applicable to the specific installation.

2.1.4.3 Operating Panel

Each publicly accessible transmitter shall have an operating panel that incorporates a dedicated signal initiating device (pull hook or push button) clearly identified for the initiation of "FIRE" signals. The device shall be protected with a conventional spring-loaded, "fast-action" break-glass, or similar pull-type door that allows observation of the actuation device when in the closed position. The door shall be fabricated and finished in a manner consistent with that required of the main housing.

2.1.4.4 Labeling

Each publicly accessible transmitter shall be labeled on both sides and on the front surface with the word "FIRE." The label shall be white with red lettering.

2.1.5 Environmental Operating Requirements

The transmitter shall be designed for reliable outside operation in an ambient temperature range of -22 to 140 degrees F. Transmitters shall be corrosion-resistant and designed for reliable operation under adverse climatic conditions including 100 mph winds, ice, rain, and snow storms.

2.1.6 Painting

Radio fire alarm transmitter and interface housings shall be factory painted. The finish color shall be fire engine red . Painted surfaces damaged during installation shall be repainted to match existing paint.

2.2 RADIO TRANSMITTER INTERFACE DEVICE

The interface device shall provide a means of converting the signals that are available from the local control equipment into a form that is compatible with the transmitter inputs, while still maintaining electrical supervision of the entire system. Interface devices shall be utilized when direct connection between local control equipment and the transmitter is not possible. Interface devices shall be completely assembled, wired, tested at the factory, and delivered ready for installation and operation.

2.2.1 Enclosure

When furnished as an independent self-contained device, the interface

device shall be incorporated into an enclosure conforming to NEMA ICS 1or other national standard as required by its location.

2.2.2 Indicators

Indicators shall be provided to indicate alarm and trouble conditions and shall consist of a red fire alarm and an amber trouble light. The indicators shall be designed to ensure visibility during daylight hours and to indicate the reporting zone.

2.2.3 Access

Switches and other controls shall not be accessible without the use of a key. Access to controls shall be by unlocking and opening a panel or door.

2.2.4 Mounting

Interface housings shall be designed for universal mounting on walls, poles, or pedestals. Mounting shall utilize either lag bolts, anchor bolts, stainless steel banding, mounting brackets, or a shackle/bolt combination, as applicable to the specific installation.

2.2.5 Inputs/Outputs

Each interface panel shall provide, as a minimum, the number of alarm circuit inputs and outputs indicated. Each input circuit shall be arranged so that the alarm signals shall override the trouble signals.

2.3 RADIO FIRE ALARM MONITORING BASE STATION

2.3.1 Receiver (Transceiver) System

One master radio fire alarm receiving (transceiver) system compatible with transmitter frequency shall be provided. The system shall be completely assembled, wired, tested at the factory, and delivered ready for installation and operation. Transceivers shall be solid-state design and shall use frequency modulation. The transceiver can be a single integrated unit, or it may consist of separate transmitter and receiver modules with a common power supply, amplifier, and control unit.

2.3.1.1 Transmitter Section

Transmitter shall operate on a frequency of 143.550 MHz. Frequency stability shall be within 0.00025 percent over the operating temperature range. Transmitter shall be designed to work into a 50-ohm load. Frequency deviation shall be less than or equal to 5 kHz. Audio response shall be within plus 1 dB and minus 3 dB over the 300 Hz to 3,000 Hz range.

2.3.1.2 Receiver Section

Receiver antenna input impedance shall be 50 ohms. Receiver shall be tuned to a frequency assignment of 143.550 mHz. Receiver shall have no more than 5 percent audio distortion measured at 1,000 Hz. Receiver shall have a noise level not greater than minus 50 dB below the signal level. Receiver output shall be compatible with the associated device.

2.3.2 Fire Alarm Console

Console shall contain a complete and independent fire alarm receiving

system, consisting of, as a minimum, a radio receiver/transmitter, signal to message decoder, audio alarm signaling devices, audio alarm silence switch, visual display, alarm reset switch(es), alarm recording printer, primary and emergency power supplies, power supply monitors, memory devices, and all necessary interconnecting cables.

2.3.2.1 Audible Fire Alarm

The audible alarm signaling devices used to indicate the receipt of fire alarm messages shall produce a unique sound. The device shall be internally mounted in the console and shall be activated upon receipt of all fire alarm signals. The audible devices used to indicate the receipt of transmitter/interface trouble messages, including tamper and low-battery voltage, shall be separate and distinct from the device used to denote receipt of fire alarm messages.

2.3.2.2 Visual Display

Console display shall indicate, as a minimum, the originating transmitter identity code number and shall include the following message designations:

a. Fire

b. Trouble

c. Battery

d. Test

e. Tamper

2.3.2.3 Console Memory

Console shall have a memory buffer capable of retaining a minimum of 500 transmitter codes, together with the specific message designations associated with each transmitter. The system shall reject any received message not matching the programmed transmitter codes where such message identification code is not stored in the system. Upon command, the console shall display and print a summary of transmitters which have transmitted a low-battery or trouble message, or failed to transmit a message during the previous 24 -hour test period. Any incoming transmitter signal shall pre-empt the command display and printout function, and be processed, displayed, and printed. The 24-hour memory shall not be purged and shall always be current and available. Transmitter memory data shall not be lost in the event of a total loss of operating or emergency power supplies.

2.3.2.4 Console Supervision

The supervisory system shall provide constant supervision of the operating conditions of the console. Indicators shall be provided for each major component, and an audible signal shall be produced in the event of failure of any major component. A switch shall be provided to silence the audible trouble signal.

2.3.2.5 Receiver Supervision

The supervisory system shall provide constant supervision and display of the operating condition of the radio receivers, and shall indicate an abnormal condition when a radio fire alarm transmitter carrier lasting more

than 15 seconds is detected. The receiver's ability to properly receive and decode an incoming signal shall be tested at least once every 30 minutes.

2.3.2.6 Manual Battery Test

Console shall have a switch to manually place the console on emergency battery power for test purposes.

2.3.2.7 Electrical Connections

Console shall be designed with modular components to allow interchange of components for maintenance purposes. Primary power cables shall incorporate positive twist-lock connections. Interconnecting cables and connectors shall be compatible with computer quality signal data transmission.

2.3.3 Antenna System

The antenna system shall utilize vertical polarization antennas, communication links between transmitters/receivers and antennas, and matching networks as needed for the proper coverage. The antenna system shall be either omni-directional or shaped-coveraged as selected by the Contractor based on the topography. The antenna system and cabling shall be furnished to provide adequate system gain. The antennas shall be capable of withstanding the environmental conditions of 125 mph wind and 1/2 inch radial ice without failure. Lightning protection shall comply with NFPA 780. Antenna supporting structures shall comply with EIA ANSI/TIA/EIA-222-F.

2.3.3.1 Grounding Conductors

Antenna grounding conductors shall be minimum 32-strand, No. 17 AWG copper.

2.3.3.2 Communication Links

Transmission line between the transmitter/receiver and the antenna shall be 50-ohm impedance rated for the transmitter output power. As a minimum, cable shall exhibit an attenuation not exceeding 1.1 dB per 100 feet at 200 mHz.

2.4 FIRE ALARM SYSTEM PERIPHERAL EQUIPMENT

2.4.1 Repeaters

Repeaters shall be provided where indicated or required to meet system requirements. The repeater shall receive on 143.550 MHz and transmit on 143.550 mHz. The receiver and transmitter sections shall conform to the requirements specified for transceivers. Two-way data transmission shall be relayed between the base station and remote stations. Repeater shall utilize a bandpass-type duplexer and one antenna, or multiple-bandpass cavity filters and multiple antennas. The duplexer or filter cavities shall isolate the receiver from transmitter spurious noise and prevent receiver desensitization. The duplexer or filter cavities shall be rated to handle the output power of the transmitter. Repeater shall be keyed with tone-encoded control circuit. A transmitter time-out circuit shall be provided to prevent system lockup.

2.4.2 Radio Fire Alarm Transmitter Box Location Light

Each indicated transmitter providing publicly accessible actuating functions shall be provided with a vapor-tight, incandescent type light fixture constructed of a flame retardant, nonplastic, polycarbonate material with a threaded ruby globe. The light shall be supported with 1/2 inch galvanized steel conduit and located approximately 1 foot above the box. The light shall be provided with an incandescent, 50-watt, 120-volt extended service lamp. Transmitters which are powered by battery only shall not be equipped with location lights.

2.4.3 Conduit

Conduit and fittings shall comply with UL 6, UL 1242, and UL 797.

2.4.4 Ground Rods

Ground rods shall be of copper-clad steel conforming to UL 467 .

2.4.5 Power Supply

The operating power for the system shall be single phase taken from the building electric service as specified in paragraph Power Supply for the System. Emergency backup power shall be provided by sealed lead-acid or nickel-calcium type batteries requiring no additional water. The charging system shall recharge fully discharged batteries within 12 hours and maintain the batteries in the fully charged state. The battery shall have the capacity to operate the system for not less than 48 hours under maximum normal load with the power supply to the charger disconnected.

2.4.6 Wiring

Wiring shall be in accordance with NFPA 70 and as indicated. Station wiring shall be color coded.

2.4.7 Special Tools and Spare Parts

Special tools necessary for the maintenance of the equipment shall be furnished. One spare set of fuses of each type and size required and 5 spare lamps of each type shall be furnished.

PART 3 EXECUTION

3.1 INSTALLATION

All work shall be installed as shown and in accordance with the manufacturer's recommendations, unless otherwise specified. Necessary interconnections, services, and adjustments required for a complete and operational system shall be provided. Electrical work shall be in accordance with NFPA 70.

3.1.1 Power Supply for the System

A single dedicated branch-circuit connection for supplying power to the fire alarm system shall be provided. The backup power supply shall be automatically energized upon failure of the normal power supply.

### 3.1.2 Wiring

Wiring for systems shall be installed in rigid conduit, intermediate metallic conduit, or electric metallic tubing. The conductors for the fire alarm system shall not be installed in conduits, junction boxes, or outlet boxes with conductors of lighting and power systems. The sum of the cross-sectional areas of individual conductors shall not exceed 40 percent of the interior cross-sectional area of the conduit. Conduit shall comply with NFPA 70. Ample gutter space to accommodate necessary wiring shall be provided.

## 3.2 OVERVOLTAGE AND SURGE PROTECTION

Equipment connected to alternating current circuits shall be protected from surges per IEEE C62.41 and NFPA 70. Cables and conductors which serve as communications links, except fiber optics, shall have surge protection circuits installed at each end. Fuses shall not be used for surge protection.

## 3.3 GROUNDING

Ground rods shall not protrude more than 6 inches above grade. Noncurrent-carrying metallic parts associated with radio fire alarm equipment shall have a maximum resistance to solid "earth" ground not to exceed 25 ohms.

## 3.4 TESTING

The Contractor shall notify the Contracting Officer 30 days before the performance and acceptance tests are to be conducted. The tests shall be performed in the presence of the Contracting Officer under the supervision of the fire alarm system manufacturer's qualified representative. The Contractor shall furnish all instruments and personnel required for the tests.

### 3.4.1 Performance Testing

Upon completion of the installation, the system shall be subjected to a complete functional and operational performance test by the Contractor. Test shall determine that the system is free from grounded, shorted, or open circuits. When all corrections have been made, the system shall be retested to assure that it is functional. Copies of performance test reports shall be submitted in accordance with paragraph SUBMITTALS.

### 3.4.2 Acceptance Test

The testing shall be in accordance with NFPA 72. The recommended tests in NFPA 72 shall be considered mandatory and shall verify that all previous deficiencies have been corrected. The tests shall include the following:

a. Tests to indicate there are no grounded, shorted, or open circuits.

b. Tests of each radio fire alarm transmitter/receiver/transceiver/repeater.

c. Tests of radio fire alarm monitoring base station for all required functions.

d. Tests of normal and emergency power supplies.

3.4.3 Training

The Contractor shall conduct a training course for operating staff in the building where the system is installed as designated by the Contracting Officer. The training period shall consist of 1 training day , 8 hours per day and shall start after the system is functionally completed but prior to the final acceptance tests. The field instructions shall cover all of the items contained in the approved operating and maintenance instructions.

-- End of Section --

SECTION TABLE OF CONTENTS

DIVISION 14 - CONVEYING SYSTEMS

SECTION 14602A

CRANES, SINGLE-GIRDER BRIDGE, MONORAIL AND JIB

**11/02**

PART 1 GENERAL

1.1 REFERENCES
1.2 DEFINITIONS
1.2.1 Capacity
1.2.2 Rated Lift
1.2.3 Headroom
1.3 SUBMITTALS
1.4 DELIVERY AND STORAGE
1.5 SYSTEM DESCRIPTION
1.5.1 General Requirements
1.5.1.1 Materials and Equipment
1.5.1.2 Nameplates
1.5.1.3 Verification of Dimensions
1.5.1.4 Welding
1.5.2 Design Criteria
1.5.2.1 Classification
1.5.2.2 Hoist Characteristics
1.5.2.3 Bridge Crane Characteristics
1.5.2.4 Capacity Plates

PART 2 PRODUCTS

2.1 HOIST MECHANICAL EQUIPMENT
2.1.1 Chain Hoist
2.1.1.1 Hoist Load Chain
2.1.1.2 Hoist Load-Chain Wheels
2.1.1.3 Hoist Chain Container
2.1.2 Hoist Hook Assembly
2.1.3 Hoist Gear Assembly
2.1.3.1 Gears
2.1.3.2 Gear Shafts
2.1.3.3 Gear Train Assembly
2.1.4 Hoist Bearings
2.1.4.1 Factory Sealed Bearings
2.1.5 Hoist Lubrication
2.1.6 Hoist Frame and Housing
2.1.7 Hoist Paint Finish
2.2 TROLLEYS
2.2.1 Paint
2.2.2 Wheels
2.2.2.1 Load Distribution
2.2.2.2 Design and Type
2.2.2.3 Bearings
2.2.3 Side Plates, Pins, and Axles
2.2.3.1 Side Plates

2.2.3.2 Pins and Axles
2.2.4 Gearing
2.2.4.1 Gears
2.2.4.2 Drive Pinions
2.2.5 Safety Hangers or Lugs
2.3 TROLLEY TYPE
2.3.1 Geared, Manual-Drive Trolley
2.3.1.1 Gears
2.3.1.2 Hand-Chain Wheel
2.3.1.3 Hand Chain
2.4 BRIDGE STRUCTURAL ITEMS
2.4.1 Bolts, Nuts, and Washers
2.4.2 Bridge Girders
2.4.3 End Ties and Bridge Girder End Connections
2.4.4 Bridge End Trucks
2.4.5 Runway Beams
2.4.6 Hangers
2.4.7 Safety End Stops
2.5 BRIDGE MECHANICAL EQUIPMENT
2.5.1 Bridge Drives
2.5.2 Bridge Crane Gear Assembly
2.5.2.1 Gears
2.5.2.2 Gear Shafts
2.5.2.3 Gear Train Assembly
2.5.3 Bridge Wheels
2.5.3.1 Wheels
2.5.3.2 Bearings

PART 3 EXECUTION

3.1 ERECTION
3.2 ACCEPTANCE TESTING
3.2.1 Acceptance Test
3.2.1.1 Test Sequence
3.2.1.2 Equipment Monitoring
3.2.1.3 Hooks
3.2.2 No-Load Testing
3.2.2.1 Hoist Operating and Limit Switch Test
3.2.2.2 Trolley Travel
3.2.2.3 Bridge Crane Travel
3.2.3 Load Test
3.2.3.1 Hoist
3.3 FIELD TRAINING

-- End of Section Table of Contents --

SECTION 14602A

CRANES, SINGLE-GIRDER BRIDGE, MONORAIL AND JIB
**11/02**

PART 1 GENERAL

1.1 REFERENCES

The publications listed below form a part of this specification to the extent referenced. The publications are referred to in the text by basic designation only.

AMERICAN BEARING MANUFACTURERS ASSOCIATION (ABMA)

| | |
|---|---|
| ABMA 9 | (1990; R 2000) Load Ratings and Fatigue Life for Ball Bearings |
| ABMA 11 | (1990; R 1999) Load Ratings and Fatigue Life for Roller Bearings |

AMERICAN GEAR MANUFACTURERS ASSOCIATION (AGMA)

| | |
|---|---|
| AGMA 9005 | (1994; Rev. D) Industrial Gear Lubrication |

AMERICAN INSTITUTE OF STEEL CONSTRUCTION (AISC)

| | |
|---|---|
| AISC 348 | (2000) Structural Joints Using ASTM A325 or A490 Bolts |

ASTM INTERNATIONAL (ASTM)

| | |
|---|---|
| ASTM A 325 | (2002) Structural Bolts, Steel, Heat Treated, 120/105 ksi Minimum Tensile Strength |
| ASTM A 490 | (2002) Structural Bolts, Alloy Steel, Heat-Treated, 150 ksi Minimum Tensile Strength |

ASME INTERNATIONAL (ASME)

| | |
|---|---|
| ASME B30.16 | (1999) Overhead Hoists (Underhung) |
| ASME HST-2 | (1999) Hand Chain Manually Operated Chain Hoists |

AMERICAN WELDING SOCIETY (AWS)

| | |
|---|---|
| AWS D1.1/D1.1M | (2002) Structural Welding Code - Steel |
| AWS D14.1 | (1997) Welding Industrial and Mill Cranes and Other Material Handling Equipment |

CRANE MANUFACTURERS ASSOCIATION OF AMERICA (CMAA)

| | |
|---|---|
| CMAA 74 | (2000) Top Running and Under Running, Single Girder Electric Overhead Traveling Cranes Utilizing Under Running Trolley Hoist |

1.2 DEFINITIONS

1.2.1 Capacity

Capacity shall mean the rated load in pounds, or tons of 2,000 pounds each, specified by the manufacturer for the hoist and marked plainly on the hoist and loadblock so as to be clearly legible. In determining the applied load, the weight of the handling devices shall be included.

1.2.2 Rated Lift

Rated lift shall mean the distance between the upper and lower elevations of travel of the load block.

1.2.3 Headroom

Headroom shall be measured with the load hook in the highest position with full load which is the distance between the saddle of the load hook and the following points:

a. The bottom of the beam when S-shape runways are used.

b. The top of the bottom flange for all flat, wheel-bearing flange surfaces.

1.3 SUBMITTALS

Government approval is required for submittals with a "G" designation; submittals not having a "G" designation are for information only. When used, a designation following the "G" designation identifies the office that will review the submittal for the Government. The following shall be submitted in accordance with Section 01330 SUBMITTAL PROCEDURES:

SD-02 Shop Drawings

Bridge Crane and Hoist System; G-AE

Detailed drawings shall be submitted containing details required to demonstrate that the system has been coordinated and will properly function as a unit. Drawings shall show proposed layout, anchorage of equipment and appurtenances, runway beams, suspension of runway beams and equipment relationship to other parts of the work including clearances for maintenance and operation.

SD-03 Product Data

Hoist Hook Assembly;

Materials and Equipment; G-AE

A complete list of equipment and materials, including

manufacturer's descriptive data and technical literature, performance charts and curves, catalog cuts, design calculations for the runway beams and runway beam suspension, and installation instructions shall be submitted.

Hoist Mechanical Equipment; G-AE

Manufacturer's catalog data shall be submitted showing the equipment and accessories to be provided. Diagrams, instructions, and other sheets proposed for posting shall be submitted.

Bridge Mechanical Equipment;

Diagrams, instructions and other sheets proposed for posting shall be submitted.

SD-06 Test Reports

Acceptance Testing;

Test reports in booklet form shall be submitted showing all field tests performed to adjust each component and all field tests performed to prove compliance with the specified performance criteria, upon completion and testing of the installed system. The report shall include the information as required by paragraph ACCEPTANCE TESTING.

SD-07 Certificates

Hoist Mechanical Equipment;

Certification shall be submitted attesting that each hoist and, hoist trolley and track has been factory tested for rated load capacity and operation, and that each hoist complies with the requirements specified.

SD-10 Operation and Maintenance Data

Operating and Maintenance Instructions;
Six copies of operation manuals shall be furnished for the equipment furnished. Operation manuals shall detail the step-by-step procedures required for system startup, operation, and shutdown. Operation manuals shall include the manufacturer's name, model number, parts list, and brief description of all equipment and their operating features. Operation manuals shall include an overall description of the system describing any unique features that may need special attention. Six copies of maintenance manuals shall be furnished for the equipment furnished. Maintenance manuals shall list routine maintenance procedures, possible breakdowns and repairs, and troubleshooting guides. Maintenance manuals shall include a spare parts list of manufacturers recommended spare parts that should be maintained onsite and any long lead time items should be clearly identified.

Maintenance manuals shall contain replacement part numbers for the entire assembly.

## 1.4 DELIVERY AND STORAGE

Equipment delivered shall be placed in indoor storage, protected from the weather, humidity and temperature variations, dirt and dust, or other contaminants.

## 1.5 SYSTEM DESCRIPTION

### 1.5.1 General Requirements

#### 1.5.1.1 Materials and Equipment

Materials and equipment shall be standard products of manufacturers regularly engaged in the fabrication of cranes and hoists and shall essentially duplicate items which have been in satisfactory use for at least 2 years prior to bid opening. Any company licensed by a crane and hoist manufacturer to manufacture cranes and hoists bearing their name shall have the design and components approved by the licensor prior to submission to the Government for approval.

#### 1.5.1.2 Nameplates

Each major component of equipment shall have the manufacturer's name, address, type or style, model or catalog number, and serial number on a metal plate secured to the equipment.

#### 1.5.1.3 Verification of Dimensions

The Contractor shall verify all dimensions in the field and shall advise the Contracting Officer of any discrepancy before performing any work.

#### 1.5.1.4 Welding

Welding shall be in accordance with qualified procedures using AWS D14.1 as modified herein. Written welding procedures shall specify the Contractor's standard dimensional tolerances for deviation from camber and sweep and such tolerances shall not exceed those specified in AWS D14.1. All welding shall be performed indoors. Welders and welding operators shall be qualified in accordance with AWS D1.1/D1.1M or AWS D14.1. Allowable stress values shall be in accordance with CMAA 74.

### 1.5.2 Design Criteria

The bridge crane and hoist shall be designed to operate in the spaces indicated on the structural drawings. The hook coverage and hook vertical travel shall not be less than that indicated.

#### 1.5.2.1 Classification

a. The crane shall be designed and constructed to CMAA 74 Class A, service requirements for operation in indoor hazardous environment.

b.
The hoist shall be designed and constructed to ASME HST-2M,, service requirements for operation in hazardous environment.

1.5.2.2 Hoist Characteristics

Hoist shall be hand chain operated. Each hoist shall have the capacity, lift-height, suspension, and operating characteristics indicated and as follows:

a. Hoist capacity shall be 1 tons.

b. Hoist shall be a standard lift with a minimum lift of 11 feet.

c. The hoist shall be the lug-suspension type, mounted on an underrunning hand geared trolley.

d. The hoist and suspension shall be the standard or minimum headroom type as required.

e. Components of the hoist shall be designed and constructed for safety of operation and durability of components. Replacement parts shall be interchangeable and readily accessible.

1.5.2.3 Bridge Crane Characteristics

The bridge crane shall be underrunning single-girder overhead traveling crane utilizing an underrunning trolley hoist and a hand operated chain drive.

1.5.2.4 Capacity Plates

Two capacity plates shall be provided, one for each side of the bridge. Each plate shall be lettered to indicate the total rated hoisting capacity of the crane. All lettering shall be of sufficient size to be easily read from the floor. Each lower load block shall be marked with the hoist rated capacity. Rated load of the hoist shall be marked in accordance with ASME B30.16.

PART 2 PRODUCTS

2.1 HOIST MECHANICAL EQUIPMENT

2.1.1 Chain Hoist

2.1.1.1 Hoist Load Chain

Noncorroding, nonsparking roller load chain or link load chain shall be AISC Series 300 chrome-nickel alloy corrosion-resistant steel chain designed for hoist service and of sufficient section, hardness, and strength to meet specification requirements and to withstand the tests specified in ASME HST-2.

Load chain shall have a safety factor of not less than 5, based on the minimum ultimate strength of the material.

2.1.1.2 Hoist Load-Chain Wheels

Load-chain wheels and roller-chain sprockets and shafts shall be manufactured from steel or heat-treated nodular cast iron. Wheels shall be pocket or sprocket type, shaped to fit the links of the load chain or to accommodate roller chain. Chain shall operate freely and smoothly over

load wheels without binding or jamming. The load-chain shaft may be integral with or rigidly connected to the load-chain wheel. Welding of the wheel to the shaft will not be permitted. Load chain shall be provided with surface-hardened, heat-treated steel guides that surround the load wheel and which will prevent wedging or jamming regardless of angle of pull.

2.1.1.3 Hoist Chain Container

A chain container shall be provided for each chain hoist. Design of chain container shall maintain the headroom and clearance requirements of the hoist and shall not interfere with the operation of the load chain or load chain wheel.

2.1.2 Hoist Hook Assembly

a.
Load blocks and hook assembly shall be the nonsparking, noncorroding type, fabricated of AISC Type 304, 18-8 chrome-nickel corrosion-resistant steel; or they shall be a bronze alloy of suitable strength and section for the rated capacity load.

2.1.3 Hoist Gear Assembly

2.1.3.1 Gears

Gears shall be spur, helical, spiral, or bevel-type, accurately machined, and conforming to AGMA standards for this type of service.

2.1.3.2 Gear Shafts

Gear shafts shall be manufactured from high-carbon steel or alloy steel, machined and ground for accurate fit, and splined for fitting to the mating gear.

2.1.3.3 Gear Train Assembly

Gear train assembly shall be totally enclosed in the hoist frame casting and shall operate in a sealed oil bath. Frame casting shall be provided with lubrication fittings and inspection ports.

2.1.4 Hoist Bearings

2.1.4.1 Factory Sealed Bearings

Sprocket bearings, motor bearings, and load-block bearings shall be prelubricated factory sealed bearings.

2.1.5 Hoist Lubrication

Adequate lubrication shall be provided for moving parts of the hoist and trolley and for filling, draining, and checking the level of the lubricant. Lubricant shall be designed for use in an ambient temperature of 54 to 109 degrees F. Lubrication and mechanism housing shall prevent leaking and shall prevent lubricant from coming into contact with equipment. Lubricant shall conform to AGMA 9005.

2.1.6 Hoist Frame and Housing

Operating parts of the hoist shall be mounted and enclosed in a sealed, factory-painted metal frame of malleable iron, cast steel, welded steel, or aluminum. Welded or bolted frames shall carry loads on the fabricated pieces. Welds or bolts shall be used only to hold the fabricated parts in position.

2.1.7 Hoist Paint Finish

Each hoist and accessory shall receive a factory-applied paint finish. Hooks shall not be painted.

2.2 TROLLEYS

2.2.1 Paint

Each trolley assembly shall be factory-painted, designed specifically for use with the specified hoist, and shall be furnished by the hoist manufacturer. Paint finish shall be the same type and quality specified for the hoist.

2.2.2 Wheels

2.2.2.1 Load Distribution

Each trolley assembly shall have not less than four wheels. Sufficient wheels shall be provided to properly distribute the load. The load on a wheel shall not exceed 1,200 DW pounds where D equals the diameter of the wheel in inches and W equals the width of the rail head or the nominal length of bearing on the tread.

2.2.2.2 Design and Type

Wheels shall be single-flange type. Noncorroding, nonsparking trolley wheels shall be AISC Type 304 corrosion-resistant steel or suitable copper alloy. Wheels shall be designed to operate on sloped or flat flange I-beams.

2.2.2.3 Bearings

Trolley wheels shall be carried on sealed, permanently lubricated, antifriction bearings designed for axial and thrust loading. Bearings shall conform to the applicable requirements of ABMA 9 and ABMA 11. Bearings shall have an L-10 life of 3,000 hours or more, as defined by ABMA 9 or ABMA 11 as applicable.

2.2.3 Side Plates, Pins, and Axles

2.2.3.1 Side Plates

Side plates shall be fabricated from structural-quality rolled-steel plate milled to the required profile with integral bosses where necessary to support equalizing pins; side plates shall be fitted with steel end bumpers.

2.2.3.2 Pins and Axles

Equalizing pins and axles shall be heat-treated alloy steel, machined and finish ground to the required size.

2.2.4 Gearing

2.2.4.1 Gears

Gears shall be cut from heat-treated alloy steel accurately machined into spur, helical, and pinion gears, conforming to AGMA requirements.

2.2.4.2 Drive Pinions

Drive pinions shall be carburized alloy steel, malleable iron, or bronze, with cut or cast teeth, conforming to AGMA requirements.

2.2.5 Safety Hangers or Lugs

Safety hangers or lugs shall be steel and shall be integral with, or fastened to, each hoist frame or to trolley frame. They shall ride free above the bottom flange of the beam. Hanger shall be of sufficient capacity to hold the hoist, fully loaded, in the I-beam in case of wheel or axle failure. Safety factor of each part of trolley assembly shall be not less than 5, based on the ultimate strength of the material used.

2.3 TROLLEY TYPE

2.3.1 Geared, Manual-Drive Trolley

Geared, manual-drive trolley shall conform to ASME HST-2 and the requirements specified.

2.3.1.1 Gears

Trolleys shall have gears provided on not less than two wheels to permit propelling the hoist along the rail by a gear mechanism operated by a hand chain and wheel.

2.3.1.2 Hand-Chain Wheel

Hand-chain wheel shall be manufactured from steel, malleable iron, high-strength cast iron, or aluminum alloy, with shaped pockets to receive hand chain and with guides that will permit operation of the hand chain from an angle of 10 degrees from either side of the chain wheel without slipping or jumping the wheel rim.

2.3.1.3 Hand Chain

Noncorroding, nonsparking hand chain shall be endless-coil, link-type, fabricated from AISC Type 304 corrosion-resistant steel or suitable bronze or aluminum alloy. Hand-chain reach distance shall be standard length for specified lift height of hoist and shall reach approximately 30 inches above the operating floor.

2.4 BRIDGE STRUCTURAL ITEMS

2.4.1 Bolts, Nuts, and Washers

Bolts, nuts, and washers shall conform to ASTM A 325 bolts. High-strength bolted connections shall conform to the requirements of AISC 348, except that ASTM A 490 bolts shall not be used. No galvanized bolts shall be used.

2.4.2 Bridge Girders

Bridge girders shall be wide-flange beams, standard I-Beams, reinforced beams or sections fabricated from rolled plates and shapes.

2.4.3 End Ties and Bridge Girder End Connections

Horizontal gusset plates shall be provided at the elevation of the top and bottom end tie flanges for connection to girder ends. End connections shall be made using high-strength bolts. Body-bound bolts fitted in drilled and reamed holes shall be used to maintain the crane square.

2.4.4 Bridge End Trucks

End trucks shall be fabricated from structural steel providing a rigid structure and shall be of the rotating or fixed-axle type. A means shall be provided to prevent the crane from dropping more than one inch in case of axle failure.

2.4.5 Runway Beams

The runway beams for the bridge travel shall be of the size recommended by the crane manufacturer and shall be in accordance with CMAA 74.

2.4.6 Hangers

The Contractor shall provide and install all necessary hangers and bracing members required to properly support the crane runway beams and the maximum service loads. Hangers and bracing shall be secured to the sructural steel supports at the points approved using clamps, bolts, and/or welding. All bolts or clamps shall be secured with lock washers or other type fastener which will prevent loosening of connections. Hangers and bracing shall be designed to permit ready alignment of runway beams in each direction. Hanger and bracing forces and location of those forces shall be coordinated with the Metal Building Supplier.

2.4.7 Safety End Stops

All ends of runway beams shall be protected by end stops. The bridge crane shall be provided with rubber bumpers to mate with the end stops.

2.5 BRIDGE MECHANICAL EQUIPMENT

2.5.1 Bridge Drives

Bridge shall have a hand operated chain drive system. Noncorroding, nonsparking hand chain shall be endless-coil, link-type, fabricated from AISC Type 304 corrosion-resistant steel or suitable bronze or aluminum alloy.

2.5.2 Bridge Crane Gear Assembly

2.5.2.1 Gears

Gears shall be spur, helical, spiral, or bevel type, accurately machined, and conforming to AGMA standards for this type of service.

2.5.2.2 Gear Shafts

Gear shafts shall be manufactured from high-carbon steel or alloy steel,

machined and ground for accurate fit, and splined for fitting to the mating gear.

2.5.2.3 Gear Train Assembly

Gear train assembly shall be totally enclosed in the drive housing and shall operate in a sealed oil bath. The drive housing shall be provided with lubrication fittings and inspection ports.

2.5.3 Bridge Wheels

2.5.3.1 Wheels

The bridge assembly shall have not less than four wheels. Sufficient wheels shall be provided to properly distribute the load. The load on a wheel shall not exceed 1,200 DW pounds where D equals the diameter of the wheel in inches and W equals the width of the rail head or the nominal length of bearing on the tread. Wheels shall be constructed of noncorroding, nonsparking AISC Type 304 corrosion-resistant steel or suitable copper alloy. Wheels shall be designed to operate on sloped or flat flange I-beams.

2.5.3.2 Bearings

Wheels shall be carried on sealed, permanently lubricated, antifriction bearings designed for axial and thrust loading. Bearings shall conform to the applicable requirements of the ABMA 9 or ABMA 11. Bearings shall have an L-10 life of 3,000 hours or more, as defined by ABMA 9or ABMA 11 as applicable.

PART 3 EXECUTION

3.1 ERECTION

Erection shall be in accordance with the manufacturer's instructions.

3.2 ACCEPTANCE TESTING

Acceptance testing shall comply with the following paragraphs.

3.2.1 Acceptance Test

The Contractor shall provide all personnel necessary to conduct the tests including but not limited to operators, riggers, rigging gear, and test weights. Testing shall be performed in the presence of Contracting Officer. The Contractor shall notify the Contracting Officer 7 days prior to testing operations.

3.2.1.1 Test Sequence

The equipment shall be tested according to the applicable paragraphs of this procedure in the sequence provided.

3.2.1.2 Equipment Monitoring

During the load test, improper operation or poor condition of safety devices, mechanical equipment, and structural assemblies shall be monitored. Observed defects critical to continued testing shall be reported immediately to the Contracting Officer and testing shall be

suspended until the deficiency is corrected. During and immediately following each load test, the following inspections shall be made:

a. Inspect for evidence of bending, warping, permanent deformation, cracking, or malfunction of structural components.

b.
Check chain sprockets for proper operation, freedom of movement, abnormal noise, or vibration.
c.. Inspect external gears for abnormal wear patterns, damage, or inadequate lubrication.

3.2.1.3 Hooks

Hooks shall be measured for hook-throat spread before and after load test. A throat dimension base measurement shall be established by installing two tram points and measuring the distance between these tram points (to within 1/64 inch). This base dimension shall be recorded. The distance between tram points shall be measured before and after load test. An increase in the throat opening by more than 1 percent from the base measurement shall be cause for rejection.

3.2.2 No-Load Testing

3.2.2.1 Hoist Operating and Limit Switch Test

The load hook shall be raised and lowered through the full range of normal travel. The test shall be repeated a sufficient number of times (minimum of three) to demonstrate proper operation. Brake action shall be tested in each direction.

3.2.2.2 Trolley Travel

The trolley shall be operated the full distance of the bridge crane rails. The test sahll be repeated a sufficient number of times (minimum of three) to demonstrate proper operation.

3.2.2.3 Bridge Crane Travel

The bridge crane shall be operated the full distance of the runway beams using the geared hand chain drive. The test shall be repeated a sufficient number of times (minimum of three) to demonstrater proper operation.

3.2.3 Load Test

3.2.3.1 Hoist

Unless otherwise indicated, the following tests shall be performed using a test load of 125 percent of rated load.

a. Dynamic Load Test: The test load shall be raised and lowered through the full-range. The machinery shall be completely stopped at least once in each direction to ensure proper brake operation.

b.
Trolley Dynamic Load Test: While operating the trolley the full distance of the bridge crane rails in each direction with test load on the hook (one cycle).

## 3.3 FIELD TRAINING

A field training course shall be provided for designated operating staff members. Training shall be provided for a total period of 2 hours of normal working time and shall start after the system is functionally complete but prior to final acceptance tests. Field training shall cover all of the items contained in the operating and maintenance instructions. The Contracting Officer shall be given at least 2 weeks advance notice of such training.

-- End of Section --

SECTION TABLE OF CONTENTS

DIVISION 15 - MECHANICAL

SECTION 15050

MECHANICAL EQUIPMENT, FUELING

**03/99; Rev.12/00**

PART 1 GENERAL

1.1 REFERENCES
1.2 SUBMITTALS

PART 2 PRODUCTS

2.1 DESIGN CONDITIONS
2.2 COMPOSITION OF MATERIALS
2.3 ELECTRICAL WORK
2.4 MATERIALS AND EQUIPMENT
2.4.1 Supplier
2.4.1.1 Hydrant System Supplier Qualifications and Experience Statement
2.4.1.2 Supplier Components
2.4.1.3 Component Storage
2.4.1.4 Supplier Installation
2.4.1.5 System Start-up
2.4.1.6 Equipment Data
2.4.1.7 Training
2.4.1.8 Calibration Equipment
2.5 Pressure Gauges
2.6 GASKETS
2.7 BOLTS AND NUTS
2.8 AUTOMATIC PUMP CONTROLS
2.8.1 Pressure Indicating Transmitters
2.8.2 Flow Switches
2.8.3 Venturi Tubes
2.8.4 Differential Pressure Transmitter
2.8.5 Temperature Indicating Transmitter
2.9 METERS
2.9.1 Pressure Loss
2.9.2 Materials of Construction
2.10 PRODUCT RECOVERY TANK AND ACCESSORIES
2.10.1 Tank Construction
2.10.1.1 Steel Tank With Vault
2.10.1.2 Leak Detection System
2.10.1.3 Tank Appurtenances and Fittings
2.10.1.4 Tank Vents
2.10.1.5 Manway
2.10.1.6 Sampling and Gauging hatch
2.10.1.7 Liquid-level Indicator
2.10.1.8 Float Switch Assembly
2.10.1.9 Fuel Transfer Pump (FTP-1)
2.10.1.10 Electric Pump
2.10.1.11 Lockable Cap

2.10.1.12 Gravity Fill - Spill Containment Basin
2.10.1.13 Overfill Valve (OV-1)
2.10.1.14 Tank Calibration
2.11 Hydrant Outlet Pits and Isolation Valve Pits
2.11.1 Pit Cover
2.11.2 Pit Cover Materials, Design, and Testing
2.11.3 Pipe Seals
2.11.4 Hydrant Outlet Pit Equipment
2.12 HIGH POINT VENT AND LOW POINT DRAIN PITS
2.12.1 Pit Assembly
2.12.2 Pit
2.12.3 Pit Cover, General Requirements
2.12.4 Pit Cover Materials, Design, and Testing
2.12.5 Pipe Riser Seal
2.13 OPERATING AND BULK TANK LEVEL INDICATOR
2.14 OPERATING AND BULK TANK LEVEL SWITCHES
2.14.1 Electronic Level Alarms
2.14.2 Level Alarm Control Modules
2.15 Water Draw-off system

PART 3 EXECUTION

3.1 GENERAL
3.1.1 Installation
3.1.2 Anchoring
3.1.3 Grouting
3.1.4 Leveling and Aligning
3.1.5 Direct Drives
3.1.5.1 Rotation Direction and Speed
3.1.5.2 End Play
3.1.5.3 Shaft Leveling and Radial Alignment
3.1.5.4 Angular Alignment and End Clearance
3.1.5.5 Final Recheck
3.1.6 Precautions
3.2 INSTALLATION OF UNDERGROUND TANKS
3.2.1 Coating
3.2.2 Steel Tanks
3.3 INSTALLATION OF FIBERGLASS PITS
3.4 POSTED OPERATING INSTRUCTIONS
3.4.1 Each System
3.4.2 Each Tank
3.4.3 Each Item
3.4.4 Diagrams
3.4.5 Volume of Fuel

-- End of Section Table of Contents --

SECTION 15050
MECHANICAL EQUIPMENT, FUELING
**03/99; Rev.12/00**

PART 1 GENERAL

1.1 REFERENCES

Waiver to Use MilStds and MilSpecs in Air Force Fuel Projects, HQ AFCESA/CESM (01/29/96).

The publications listed below form a part of this specification to the extent referenced. The publications are referred to in the text by basic designation only.

ASME INTERNATIONAL (ASME)

| | |
|---|---|
| ASME B16.5 | (1996) Pipe Flanges and Flanged Fittings |
| ASME B40.100 | (2000) Pressure Guages and Guage Attachments |

AMERICAN PETROLEUM INSTITUTE (API)

| | |
|---|---|
| API RP 1615 | (1996) Installation of Underground Petroleum Storage Systems |

ASTM INTERNATIONAL (ASTM)

| | |
|---|---|
| ASTM C 827 | (1995a; R 1997e1) Standard Test Method for Change in Height at Early Ages of Cylindrical Specimens from Cementitious Mixtures |

U.S. ENVIRONMENTAL PROTECTION AGENCY (EPA)

| | |
|---|---|
| EPA 40 CFR Part 280 | Underground Storage Tanks; Technical Requirements and State Program Approval, Final Rules |

NATIONAL FIRE PROTECTION ASSOCIATION (NFPA)

| | |
|---|---|
| NFPA 30 | (2000) Flammable and Combustible Liquids Code |
| NFPA 70 | (2002) National Electric Code |

U.S. DEPARTMENT OF DEFENSE (DOD)

| | |
|---|---|
| MS MIL-P-24441 | (Rev. C; Supp. 1) General Specification for Paint, Epoxy - Polyamide |
| MS MIL-T-83133 | (Rev. E) Turbine Fuels, Aviation, Kerosene |

Types, NATO F-34(JP-8) and NATO F-35

MILITARY STANDARDS (MIL-STD)

MIL-STD-130 (Rev. G, 1988) Identification Marking of U.S. Military Property

MIL-STD-161 (Rev. F, 1985; Notice 2) Identification Methods for Bulk Petroleum Products Systems Including Hydrocarbon Missile Fuels

SOCIETY OF AUTOMOTIVE ENGINEERS INTERNATIONAL (SAE)

SAE AMS 3275 (Rev. B, 1999) Sheet Acrylonitrile Butadiene (NRB) Rubber and Non-Asbestos Fiber Fuel and Oil Resistant

STEEL TANK INSTITUTE (STI)

STI P3 (2000) Exterior Corrosion Protection of Underground Steel Storage Tanks

UNDERWRITERS LABORATORIES (UL)

UL 58 (1996) Steel Underground Tanks for Flammable and Combustible Liquids

## 1.2 SUBMITTALS

Government approval is required for submittals with a "G" designation; submittals not having a "G" designation are for information only. When used, a designation following the "G" designation identifies the office that will review the submittal for the Government. The following shall be submitted in accordance with Section 01330 SUBMITTAL PROCEDURES:

SD-01 Qualifications

Hydrant System Supplier Qualifications and Experience Statement; G-AE

SD-02 Shop Drawings

Detail drawings consisting of illustrations, schedules, performance charts, instructions, brochures, diagrams, and other information to illustrate the requirements and operation of the equipment and systems.

Meters; G-AE

Venturi Tubes; G-AE

Hydrant Outlet Pits and Isolation Valve Pits; G-AE

High Point Vent and Low Point Drain Pits; G-AE

Product Recovery Tank and Accessories; G-AE

Provide the drawings as one package with the design analysis. Shop fabrication drawings shall include type of material,

configuration, thickness, and necessary details of construction of the steel tank and vault. Shop drawings shall also show the steel grating and supports.

SD-03 Product Data

Manufacturer's Catalog Data

Pressure Gauges; G-AE

Automatic Pump Controls; G-AE

Meters; G-AE

Pressure Indicating Transmitters; G-AE

Differential Pressure Transmitter; G-AE

Temperature Indicating Transmitter; G-AE

Product Recovery Tank and Accessories; G-AE

Hydrant Outlet Pits and Isolation Valve Pits; G-AE

High Point Vent and Low Point Drain Pits; G-AE

Flow Switches; G-AE

Pipe Seals; G-AE

Operating and Bulk Tank Level Switches; G-AE

Operating and Bulk Tank Level Indicator; G-AE

Venturi Tubes; G-AE

SD-06 Test Reports

Leak Detection System; G-AE

SD-07 Certificates

Certificates of Compliance

Coatings ; G-AE

UL Label; G-AE

STI-P3 Label; G-AE

Hydrant Outlet Pits and Isolation Valve Pits; G-AE

SD-10 Operating and Maintenance Data

Operation and maintenance information shall be submitted for the equipment items or systems listed below. Automatic pump controls shall include step-by step procedures required for system startup, operation and shutdown. Refer to Section 01730 FACILITY OPERATION

AND MAINTENANCE MANUAL for the information to be submitted for various type of equipment and systems.

Pressure Gauges; G-AE

Automatic Pump Controls; G-AD

Product Recovery Tank and Accessories; G-AE

Operating and Bulk Tank Level Indicator; G-AE

## PART 2 PRODUCTS

### 2.1 DESIGN CONDITIONS

Components shall be suitable for use with JP-8 turbine fuel; specific gravity 0.81 at 60 degrees F., viscosity 1.62 CS at 60 degrees F., Reid vapor pressure less than 0.05 psi, MS MIL-T-83133. Components to be ANSI Class 150 (275 PSIG at 100 degrees F.) unless noted otherwise. Components to be suitable for outside, unsheltered location, and to function normally in ambient temperatures between 0 degrees F. and 120 degrees F.

### 2.2 COMPOSITION OF MATERIALS

Materials in contact with the fuel shall be noncorrosive. No zinc-coated metals, brass, bronze, iron, lead or lead alloys, copper or copper alloys, or other light metal alloys containing more than 4% copper shall be used in contact with the fuel.

### 2.3 ELECTRICAL WORK

Motors, manual or automatic motor control equipment except where installed in motor control centers, and protective or signal devices required for the operation specified herein shall be provided under this section in accordance with Section 16415A ELECTRICAL WORK, INTERIOR. Any wiring required for the operation specified herein, but not shown on the electrical plans, shall be provided under this section in accordance with Section 16415A ELECTRICAL WORK, INTERIOR.

### 2.4 MATERIALS AND EQUIPMENT

All items of material and equipment shall be new and of the best quality used for the purpose in commercial practice and shall be products of reputable manufacturers. Each major component of equipment shall have the manufacturer's name, address and catalog number on a plate securely affixed in a conspicuous place. The nameplate of a distributing agent only will not be acceptable. The gears, couplings, projecting set screws, keys and other rotating parts located so that any person may come in close proximity thereto shall be fully enclosed or properly guarded. Equipment, assemblies and parts shall be marked for identification in accordance with MIL-STD-130 and MIL-STD-161. Identification tags made of brass, stainless steel, or engraved anodized aluminum, indicating valve number and normally open (NO) or normally closed (NC) shall be installed on valves. Tags shall be 1-3/8 inch minimum diameter, and marking shall be stamped or engraved. Indentations shall be black, for reading clarity. Tags shall be attached to valves with No 12 AWG, copper wire, stainless or aluminum hanging wires, or chrome-plated beaded chain designed for that purpose.

2.4.1 Supplier

The Contractor's attention is directed to the fact that the pump control system, including but not limited to pump control panel, venturi tubes, transmitters, flow switches, pumps, all field instrumentation and control valves with all hardware and software as an integrated system, shall be furnished by a single systems supplier regularly engaged in the supplying of this equipment. System Supplier shall be a company whose regular, normal and primary business is representing manufacturers in the distribution and start-up of aviation fueling facilities and have no affiliation with the contractor other than as a seller to the contractor. Supplier shall provide all equipment and appurtenances regardless of manufacture, shall be a factory authorized certified representative, shall be responsible to the Contractor for satisfactory operation of the entire system and shall oversee the installation of the piping, mechanical equipment and controls. Substitutions of functions specified will not be acceptable. The Contractor and the system Supplier shall be present at the system commissioning and shall coordinate the work of the system manufacturer's service personnel during construction, testing, calibration, and acceptance of the system.

2.4.1.1 Hydrant System Supplier Qualifications and Experience Statement

Submit the following for approval:

a. Certification stating that the system supplier has provided and installed at least five PLC-based pump control systems in the last five years, for automatic cycling of pumps based upon varying dispensing demands, utilitizing multiple pumps. These systems shall be for dispensing jet fuel.

b. Certification that five systems have successfully operated over the last three years and are currently in service.

c. Project names, locations, system description and items provided at these installations. Include user point-of-contact and current telephone numbers.

c. Provide proof of factory certification.

2.4.1.2 Supplier Components

The supplier shall provide and integrate suitable components (regardless of manufacturer) to provide an efficient, accurate, repeatable and reliable system that meets all specified performance characteristics.

2.4.1.3 Component Storage

The Supplier shall work with the Contractor and Sub-Contractors to ensure that equipment and materials are stored and installed properly to prevent damage, minimize air entrapment and maintain cleanliness of the installed system.

2.4.1.4 Supplier Installation

The Supplier shall work closely with both mechanical and electrical subcontractors to ensure proper installation of equipment, instrumentation, wiring and coordination between trades.

2.4.1.5 System Start-up

The Supplier shall work closely with the Contractor during system start-up and commissioning (Section 15899) activities. The supplier shall conduct an on-site verification of proper equipment installation, programming, wiring, calibration, set-point adjustments, hydraulic control settings, pressure relief settings, alarm settings, etc., prior to initial fuel receipt. The supplier shall assist the Contractor with initial fuel receipt, line packing, flushing and cleaning operations. The Supplier shall assist the Contractor with developing the System Start-Up Plan, shall coordinate the work of manufacturer's field technicians, shall oversee system performance tests and final performance demonstrations and shall plot the system profile during those operations using the trending software specified in Section 15970. The Supplier shall also coordinate Government-provided equipment and manpower support for start-up and commissioning activities.

2.4.1.6 Equipment Data

The Supplier shall provide equipment data for inclusion in the Operations and Maintenance Manuals for the project (Section 01730), which is clear and detailed enough to facilitate both installation and maintenance.

2.4.1.7 Training

The Supplier shall participate in Contractor-provided training on the system (Section 01730) to ensure that Government operators and maintenance personnel are proficient in the respective areas of responsibility prior to system acceptance. As a minimum, the supplier shall provide training on the control system (computer hardware, computer software, electronic sensors, transmitters, automatic control valves, etc.) that enables the Base Liquid Fuels Maintenance Shop to properly accomplish maintenance, weekly system integrity testing, annual calibrations, diagnostic testing, troubleshooting and repairs.

2.4.1.8 Calibration Equipment

The supplier shall provide calibration equipment for electronic pressure sensors, pressure transmitters, temperature transmitters and digital displays. Calibration equipment shall be retained by Liquid Fuels Manager for annual testing and calibration of the control system components.

2.5 Pressure Gauges

Pressure gages shall conform to ASME B40.100 with metal cases and 4-inch diameter white dials. Gages shall be bottom connected, without back flanges. A pulsation dampener, adjustable to the degree of dampening required, shall be provided for each gage. Range of gages shall be as indicated. A ball valve shall be provided for each pressure gage. Gages shall have all parts immersed in silicone oil. Gages shall be labeled with the calibration date.

2.6 GASKETS

Gaskets shall be in accordance with Section 15060 PIPE, MANUAL VALVES, AND FITTINGS, FUELING SYSTEM.

## 2.7 BOLTS AND NUTS

Bolts and nuts shall be in accordance with Section 15060 PIPE, MANUAL VALVES, AND FITTINGS, FUELING SYSTEM.

## 2.8 AUTOMATIC PUMP CONTROLS

The pressure and flow transmitters specified in this paragraph shall be obtained from a single supplier of such products. The same supplier shall also furnish the associated venturi tubes and GPM meter. The supplier shall be responsible for furnishing components that are compatible and that operate as a system to perform the required pump control functions. Control tubing between controls/instruments and fuel lines shall be installed to eliminate air entrapment. Control tubing shall be as specified in Section 15060 PIPE, MANUAL VALVES, AND FITTINGS, FUELING SYSTEM. Each item of equipment specified hereafter shall have manufacturer's authorized service personnel present to assist in PERFORMANCE TESTING as specified in Section 15899 SYSTEM START-UP, FUELING SYSTEM. Items specified under this paragraph shall be submitted for approval concurrently with items specified in Section 15970 PUMP CONTROL AND ANNUNCIATION SYSTEM.

### 2.8.1 Pressure Indicating Transmitters

Pressure indicating transmitters (designated in the drawings as PIT or PS) shall consist of a capacitance sensor operating on a differential in pressure of fuel (one side being open to atmospheric pressure). The output shall be a 4 - 20 mA dc, linear signal between 0 - 100% of the input. It simultaneously will produce a digital HART (Highway Addressable Remote Transducer) output signal. Loop power shall be provided from remote power supply located in the pump control panel (PCP).

a. Transmitter body shall be stainless steel with stainless steel diaphragm capsule process connecting to a 1/2 inch NPT. Drain and vent valves to be stainless steel. Accuracy shall be $\pm$ .2 percent of calibrated span including combined effects of linearity, hysteresis and repeatability.

b. Display at the pressure transmitter shall be LCD, one per each transmitter. The digital scale shall be a 4 digit LCD capable of being read in low light/no light conditions. Indicator scale shall be in pounds per square inch gage.

d. Pressure transmitters shall be UL, FM, or CSA listed for Class 1, Division 1, Group D hazardous environment as defined by NFPA 70, with maximum temperature rating T3 (392 degrees F). Each transmitter and dial shall be supplied with a factory assembled two valve stainless steel manifold. Vent valves shall be furnished on upper ports of each transmitter and dial. Pressure transmitters and the indicating dial shall be suitable for mounting on a 2-inch pipe stand. Complete installation shall be in accordance with manufacturer's recommendations.

e. Provide a handheld combination calibration/digital communicator with HART (Highway Addressable Remote Transducer) communications device suitable for checking and setting pressure gauges, pressure switches, pressure transmitters and differential

pressure transmitters. The communicator is to be instrinsically safe and have Class I, Div. 1, Group D approval. The device is to include NIST traceable modules, one 0-500 psig range, one 0-2000 water column range and also one protection module for an open sensor bay. The unit shall be furnished in a hard carrying case and is to include a 250 Ohm shunt for the HART communicator, a A900 HART test lead kit, a 145 psig pressure pump with variator, low pressure fittings and a tubing kit. Also include a hand-held pump capable of producing a minimum of 300 psig pressure..

2.8.2 Flow Switches

Switches shall be actuating vane type flow switch with single adjustable set-point. Switches shall mount on ASME B16.5 Class 150, 2 1/2-inch raised face flange. Provide snap action switch mechanism U.L. listed for Class I, Division 1, Group D hazardous locations. Switches to be double pole double throw (DPDT). Switch power shall be 120 volts, single phase, 60 hertz, 10 amps minimum. Switch body material (CS or SS) shall match that of pipe where mounted.

2.8.3 Venturi Tubes

a. The venturi tubes shall be provided in conjunction with Section 15970 PUMP CONTROL AND ANNUNCIATION SYSTEM.

b. Start-up, adjustments and calibration, and instruction of personnel in the operation and maintenance of the venturi tubes shall be considered as a required portion of the controls package.

c. The venturi tubes shall be low loss differential pressure producers consisting of a short housing piece and a fully machined, contoured throat section providing a restriction at the center, with both inlet approach and exit having geometrically symmetrical curves. They shall be velocity head, impact, differential producing devices designed for measuring differential pressure of JP-8 fuel. They shall be constructed of 304L stainless steel with ANSI Class 150 flanges on each end and be suitable for operation of 275 psig at 100 degrees F. They shall be of sufficient thickness to with-stand the same stresses as the upstream and downstream piping. Each venturi tube shall have a minimum of four 1/2-inch connections. An individual head-capacity curve shall be furnished for each venturi tube.

d. Operating conditions for the venturi tubes shall be as follows:

(1) Issue Venturi Tube. Minimum inlet-to-throat differential pressure at 2,400 gpm: 200 in. H2O.

(2) Return Venturi Tube. Minimum inlet-to-throat differential pressure at 600 gpm: 200 in. H2O.

(3) Venturi tubes discharge coefficient "C" to be greater than or equal to 0.97 over pipe Reynolds number range between 200,000 and 1,000,000 and shall be independent of Beta over a Beta range of 0.4 to 0.75. Pressure loss shall be less than 24 percent of differential pressure generated by the venturi tube. Repeatability of the discharge

coefficient "C" shall be 2 percent for Reynolds number range of 10,000 to 1,000,000.

2.8.4 Differential Pressure Transmitter

Differential pressure transmitter shall consist of a capacitance sensor operating on a differential in pressure of fuel. The output shall be a 4 - 20mA dc, square root signal between a minimum of 4 - 100% of the input. It may be linear between 0 - 4%. It simultaneously will produce a digital HART (Highway Addressable Remote Transducer) output signal. Loop power shall be provided from remote power supply located in the pump control panel (PCP).

a. Transmitter body shall be stainless steel with stainless steel diaphragm capsule process connecting to a 1/2 inch NPT. Drain and vent valves to be stainless steel. Accuracy shall be 0.20 percent of calibrated span including combined effects of linearity, hysteresis and repeatability.

b. Display at the transmitter shall be LCD, one per each differential pressure transmitter. The digital scale shall be a 4 digit LCD, capable of being read in low light/no light conditions. Indicator scale shall be in gallons per minute.

d. Differential pressure ranges shall be selected as necessary to operate in conjunction with associated venturi tube:

(1) Issue Venturi Tube - 0 to 2400 GPM (full range)

(2) Return Venturi Tube - 0 to 800 (full range)

Each venturi tube shall have two transmitters and one indicating dial per function and shall be installed as indicated on the drawings.

e. Differential pressure transmitters shall be UL, FM, or CSA listed for Class 1, Division 1, Group D hazardous environment as defined by NFPA 70, with maximum temperature rating T3 (392 degrees F). Each transmitter with indicating LCD display shall be supplied with a factory assembled five valve stainless steel manifold. Vent valves shall be furnished on upper ports of each transmitter and indicating dial. Differential pressure transmitters and the indicating dial shall be suitable for mounting on a 2-inch pipe stand. Complete installation shall be in accordance with manufacturer's recommendations.

2.8.5 Temperature Indicating Transmitter

The system integrity (pressure) test requires monitoring hydrant loop

temperature over a specified length of time. The temperature indicating transmitter (designated on the drawings as TIT) shall consist of three-wire RTD sensor, flanged thermowell, universal connection head, remote transmitter assembly and mounting brackets for mounting the transmitter remotely to a standpipe located in the pumproom. Complete installation shall be in accordance with manufacturer's recommendations and the following requirements:

a. The transmitter and connection head shall be constructed of aluminum with Buna-N o-rings and shall have a Nema 4X rating with a factory polyurethane finish. Both the transmitter and connector housing shall have a 1/2-inch NPT connection. The sensor shall be manufactured of 316 SS.

b. The TIT shall have an operating temperature of -4 to +185 degrees F with an accuracy of +/- 2% of the calibrated span. The unit shall be loop powered from an external 24 VDC power supply and shall have an output of 4-20 mA dc, analog linear signal between 0-100% of the input. The unit shall simultaneously produce a digital HART output signal making it programmable with the HART handheld programmer specified in this section. Provide HART communicator connections fixed permanently to the terminal block within the unit housing. The RTD shall be a 100-ohm platinum RTD per IEC-751 Class B with appropriate 1 1/2-inch stainless steel ANSI 150 flanged thermowell.

c. The transmitter shall include a 4-digit, weatherproof, LCD display capable of being read in low light conditions. The indicator scale shall be in degrees F with decimal place to the tenths place.

d. The transmitter and sensor shall be UL, FM or CSA listed for use in Class I, Division 1, Group D hazardous environments as defined by NPFA 70 with a maximum temperature rating of T3 (392 degrees F).

## 2.9 METERS

Meter shall be a one-way flow, positive displacement type meter designed for a continuous flow of 600 GPM at the truck fill stand. Meter shall have ANSI Class 150 flanges and body working pressure of not less than 200 psig and shall be suitable for hydrostatic testing of 275 psig. Meter shall be factory calibrated for JP-8 jet fuel and capable of being calibrated in the field. The register shall have a non-setback total indicator and a setback type run indicator so that individual runs can be registered without affecting the total of all runs as shown on the indicator. The total indicator shall have a minimum of seven figures and the setback run indicator shall have a minimum of six figures. The register shall read in gallons and the smallest unit of indicated delivery shall be 1 gallon. Accuracy shall be within +0.3 percent between ten percent and maximum rated flow. Meters shall be provided with a suitable drain at the bottom, equipped with a ball valve.

### 2.9.1 Pressure Loss

Pressure loss through the meter shall not exceed 3 psi at 600 gpm flow rate.

### 2.9.2 Materials of Construction

Materials of construction shall be stainless steel, aluminum or nonferrous material except meter case may be steel with electrolyses nickel plated internals coated to 3 mil thickness. No ferrous or zinc-coated material bronze, brass or other copper bearing alloys shall be used in contact with

the fuel.

## 2.10 PRODUCT RECOVERY TANK AND ACCESSORIES

### 2.10.1 Tank Construction

Product recovery tank shall be a U.L. Label product, double wall, steel tank, with interstitial monitor. Tank shall be provided with calibrated gage stick and strapping chart. Tank shall be provided with a steel vault attached to tank. Vault shall be provided with a rolling pit cover and removable access grating.

#### 2.10.1.1 Steel Tank With Vault

a. The design, fabrication, erection, testing, and inspection of the double wall tank shall conform to the requirements of UL 58, Standard for Safety, Steel Underground Tanks for Flammable and Combustible Liquids, Type II. The exterior tank walls shall be separated from the interior walls by standoffs. In addition to the preceding requirements, the primary and secondary shells shall have a minimum wall thickness of 0.167-inches.

b. Material shall be carbon steel plate.

c. Lifting lugs shall be located at the balance points.

d. Provide anchor straps to attach tank to hold down slab. Straps shall be separated from the tank by a pad made of inert insulating material. Number and location of straps shall be as indicated on the drawings.

e. Tank capacity, connections and appurtenance shall be as shown on the drawings and as described under "Monitor."

f. A complete system of cathodic protection shall be provided for the tank and vault in accordance with Section 13110A CATHODIC PROTECTION SYSTEM (SACRIFICIAL ANODE) .

g. Coatings - the interior and exterior surfaces of tank and vault shall be coated for corrosion protection. The interior surface shall be coated in accordance with MS MIL-P-24441, Formulas 150, 151, and 152. The exterior surface shall be coated in accordance with STI P3 Label and the tank shall bear the STI P3 label.

#### 2.10.1.2 Leak Detection System

a. An annular space shall be provided between the primary and secondary shells to allow for the free flow and containment of all leaked product from the primary tank.

b. The tank shall be provided with a leak monitoring system capable of sensing leaks in the secondary containment space and in the vault. The system shall detect a leak of fuel through the inner shell to the area between the inner and outer shells or a leak of ground water through the outer shell into the area between the inner and outer shells. The detector and any equipment in the area of the fuel tanks and valve pits shall be explosion proof. The system shall be a continuous surveillance type. The sensor shall be electronic or hydraulic type and shall be connected to a remote panel. Totally flooded containment space reservoir system shall not be permitted. The panel shall provide an audible and visible alarm if a

leak is detected and shall indicate if the leak is fuel or water. The alarm shall be manually reset at the panel. An inert gas that is heavier than air shall be used in containment space of the tanks to prevent the forming of condensation. The tank monitoring system shall be compatible with the tank furnished and shall be as recommended by the tank manufacturer. Contractor shall provide instructions and equipment required for calibration of the monitoring system. Contractor shall also provide calibration maintenance schedule. Access shall be provided to the tank sensor for testing and maintenance. The control panel shall be located where shown on the plans. Remote alarm shall be provided at the pump control panel(PCP), see section 15970. This control panel shall have a sign located adjacent to it indicating that the alarm indicates a leak in the fuel tank or the vault. The Contractor shall provide system operating instructions inside of the control panel.

c. Monitoring shall be continuous and shall be remotely indicated. The control console shall generate a visual and audible alarm and shall provide one DPDT contact closure on alarm for remote alarm annunciation.

d. Provide double-walled pipe leak detection sensors for the double-walled pipe low points in the Product Recovery Tank Vault. The sensors shall be instrinsically safe, liquid sensing (non-discriminating), sump type sensors. Provide two leak sensors, one for each low point. Sensors shall be suitable for mounting in 2-inch pipe low points as indicated.

2.10.1.3 Tank Appurtenances and Fittings

Tank appurtenances and fittings shall be provided as indicated. Nozzles for appurtenances and steel vault shall be as indicated or per manufacturer's recommendations and shall be installed plumb with all above grade flange faces level. Gravity fill line shall be provided with locking cap. The flange on the Fuel Transfer Pump pumpway shall be an ASME Class 150 flange.

2.10.1.4 Tank Vents

Tank vents shall be standard weight steel pipe with malleable iron fittings. Vent outlets shall be equipped with pressure-vacuum vents.

2.10.1.5 Manway

A 36-inch round manway shall have U.L. listed gasket with bolted cover. A fiberglass or stainless steel ladder shall be provided inside the tank at the manway.

2.10.1.6 Sampling and Gauging hatch

A sampling and gauging hatch shall be provided and shall consist of a foot-operated, hinged cover with a flexible sealing ring and provision for padlocking. The hatch shall be non-sparking and shall have a flanged connection for installation on 4-inch steel pipe. Provide a datum plate beneath gauge opening, and stencil reference height on gauge/sampling hatch piping.

2.10.1.7 Liquid-level Indicator

Conform to the requirements listed as follows in the Operating and Bulk

Tank Level Indicator specification paragraph.

2.10.1.8 Float Switch Assembly

The float switch assembly shall be the top mounted, float operated type with vertical float rod. The switch assembly shall be suitable for flange mounting and float and trim shall be stainless steel. The switch shall be magnetically latching reed or actuated mercury switch suitable for operation on 120 volt, 60 hertz AC power. Rating of the switch contacts shall be adequate for the indicated functions shown on the drawings. This float switch assembly shall be used to start and stop the Fuel Transfer Pump and to indicate a high level and activate an alarm in the PCP. Float switch shall be intriasically safe and listed for use in Class 1, Division 1, Group D hazardous locations.

2.10.1.9 Fuel Transfer Pump (FTP-1)

Refer to Section 15140 PUMPS, FUELING SYSTEM

2.10.1.10 Electric Pump

The electric pump shall be a sliding vane type rotary pump. The pump construction shall permit the removal of the rotor and sliding vanes without disconnecting the pump. Pump capacity shall be 5 gallons per minute with a 15 feet suction head and a discharge head of 25 feet. The pump and motor shall be mounted on a cast iron or steel subbase. The motor shall have sufficient power for the service required, shall be of a type approved by the manufacturer of the pump, shall be suitable for available electric service, shall be totally enclosed, fan cooled, TEFC, and shall conform to the requirements specified in Section 16415A ELECTRICAL WORK, INTERIOR. Pump shall be provided with stainless suction screen, stainless steel pipe, and aluminum 1 1/2-inch cam type quick disconnect with dust cap.

2.10.1.11 Lockable Cap

A lockable cap shall be provided for the 2-inch gravity fill line.

2.10.1.12 Gravity Fill - Spill Containment Basin

The spill containment basin for the 2-inch gravity fill line shall have a 5 gallon capacity, a flexible slip-on boot designed for 4-inch riser pipe entry, a water resistant lid and an internally mounted hand pump for removal of any spillage. The container assembly shall include a cast iron cover.

2.10.1.13 Overfill Valve (OV-1)

Refer to Section 15101 CONTROL VALVES, FUELING SYSTEM

2.10.1.14 Tank Calibration

Provide a certified tank calibration chart in 1/8 inch increments reading in gallons. The tank calibration chart must be stamped by a registered professional engineer.

2.11 Hydrant Outlet Pits and Isolation Valve Pits

Hydrant outlet pits and isolation valve pits shall be prefabricated units that are the standard products of a firm regularly engaged in the

manufacture of such products and shall essentially duplicate items that have been in satisfactory use for at least (3) years prior to bid opening. The basic pit shall consist of .50-inch-thick fiberglass walls and floor with main body dimensions as shown on the drawings. The pit shall contain twelve (minimum) integral concrete anchors or two integral anchors that run continuous on three sides of pit. The integral fiberglass top flange shall require no exposed corrosive material, weldments, or strongbacks within the pit to support the aluminum cover assembly. The manufacturer shall have had a minimum of three years successful experience in the production and usage of their fiberglass service pits and shall supply proof of experience at time of submittals. Pits shall be provided with a 2-inch pump-out line terminating with a male cam type bronze connector with female dustcap. Pits shall be provided with removable aluminum grating platform suitable for loading of 400 pounds per square foot. The grating shall cover the entire opening when the lid is in the open position.

2.11.1 Pit Cover

The pit cover assembly shall consist of a completely removable one-piece aluminum lid attached to a rigid frame which is an integral part of the fiberglass pit. The lid shall be attached to the frame with hinges which do not carry wheel loads applied to the top surface of the lid in its closed position. The lid shall be equipped with a device to hold the lid in its fully-opened position. This lid-staying device shall automatically engage when the lid is opened to its fully-opened position. The device shall also be provided with a quick-release mechanism designed to be operated with one hand. The lid shall be considered fully-open when it is rotated approximately 90 degrees from its closed position. Each cover lid shall move smoothly through its entire range of motion and shall be counterbalanced sufficiently to require an externally-applied opening force of 35 pounds (maximum) to be applied to the center of the long side of the cover (opposite the hinge side). Similarly, the maximum closing force required to be applied at the same point shall be approximately 50 pounds. In addition, the cover shall be counterbalanced in such a fashion that the cover will not close under its own weight if released when open to any angle greater than 70 degrees (from its closed position). Operation of the lid will not have spring assist. Lifting handles (two minimum) shall be provided for each lid. Each handle shall provide comfortable, secure grip for and average adult male's full (gloved) hand. All covers shall be provided with a latch, operable from the exterior of the vault, to securely hold the lid to the frame in the closed position. The latch will be capable of being released from either lifting handle. Tools shall not be required to engage (or disengage) the latch or the lid lifting handles. Latch and handle designs shall be weather-resistant with features to prelude freeze-up and the collection of dirt and precipitation. The pit and cover assemblies shall present a surface which is 2-inch below the concrete pavement upon completing their installation. Projections of the lid's hinges, lifting handles, or latches above the plane of the lid, whether temporary or permanent, shall not be allowed. The weight bearing flange surfaces of both the fiberglass pit liner and the aluminum cover lid shall be machined flat to assure uniform weight distribution. The word FUEL shall be integrally cast in raised letters on the top surface of each lid. The lettering shall be a minimum of 1-inch high and raised to 0.0625-inch.

For the hydrant pits, the cover assembly shall be as described above excluding the one-piece design. The hydrant pit cover shall include a two-piece design incorporating a nominal 18-inch diameter twist-lock, two-hand lift center door with a non-load bearing seal. The center door

shall be retained with a safety lanyard. The center and main door shall have alignment marks to indicate the center door is secured in the locked position.

2.11.2 Pit Cover Materials, Design, and Testing

All cover lids and frames shall be designed using an appropriate cast aluminum alloy or rolled aluminum plate to support an aircraft wheel load simulated by a roving 200,000-pound test-load applied perpendicular to a 200-square-inch contact area (10 inches by 20 inches) of the cover's top surface. The aluminum alloy material selected for design shall be ductile, corrosion-resistant, impact-resistant, and suitable for the intended use. All covers shall be non-skid surface construction and free of injurious defects. Welding for the purpose of structural repair of casting defects shall not be allowed. Minor cosmetic welding is acceptable. The cover shall be capable of supporting the test-load without failure regardless of the location or orientation of the load. Localized yielding or cracking or excessive deformations shall be considered as failure. Actual load-tests shall be performed on a minimum of 10 percent of all the covers supplied. Load-tested units shall be randomly selected. Load-test conditions shall model field-installed conditions as nearly as practicable. The 200 Kip test-load shall be applied to the cover for a minimum duration of 5 minutes. Absolute maximum deflection of the cover lid under the test-load shall not exceed 1/180th of the minimum interior opening dimension of the fiberglass pit body. Maximum deflection of the cover lids) remaining after removal of the test load shall be $\pm$ 0.010-inches to assure that no permanent set has taken place. Upon removal of the test-load, the cover lid and frame shall be carefully examined for cracks or localized areas of permanent deformation. All results shall be submitted for review and approval. A single failure to meet any of the stated criteria shall be considered sufficient grounds for the testing of 50 percent of the units.

2.11.3 Pipe Seals

The pipe penetrations through the interior wall shall be sealed by means of a Buna-N boot collar. The boot collar shall be secured by stainless steel clamps. Buna-N (Nitrile Butadiene) material shall be in accordance with SAE AMS 3275. A coated carbon steel piping sleeve shall provide access through the pit side and be molded into the fiberglass wall by the manufacturer. Adjustable elastomeric seals shall be installed at the inner and outer interstitial piping voids. A centering-type casing insulator shall hold the fuel pipe in place. A shrink sleeve with stainless steel attachment bands shall be installed at the outer pipe penetration to eliminate ground water.

2.11.4 Hydrant Outlet Pit Equipment

At the Contractor's option, hydrant pits may be furnished complete with hydrant control valves and shutoff valves assembled in a pipe riser. All valves and piping furnished by the pit manufacturer shall comply with the requirements specified herein. All control valves shall be of the same manufacturer.

2.12 HIGH POINT VENT AND LOW POINT DRAIN PITS

2.12.1 Pit Assembly

Each pit shall incorporate the following items built into a self-contained assembly.

2.12.2 Pit

The basic pit shall consist of 0.25-inch wall fiberglass liner with a main body approximately 23-inches in diameter and a minimum of 37-inches deep. The pit shall contain four integral concrete anchors. The fiberglass top flange shall require no exposed corrosive material, weldments, or strongbacks within the pit to support the cast aluminum ring and cover assembly. The pits shall be the standard products of a firm regularly engaged in the manufacture of such product and shall essentially duplicate items that have been in satisfactory use for at least three (3) years prior to bid opening. Proof of experience will be submitted.

2.12.3 Pit Cover, General Requirements

The pit cover shall include a removable outer ring frame and an interior 18-inch diameter (clear opening) hinged lid that opens 180 degrees. Each cover lid shall move smoothly through it entire range of motion and shall require a maximum opening force of 25 pounds to be applied at a single lifting handle. Each handle shall provide a comfortable, secure grip for an average adult male's full gloved hand. Tools shall not be required to engage the lifting handle. Projections of the lid's hinges or handles above the plane of the lid, whether temporary or permanent, shall not be allowed. The pit service shall be integrally cast in raised letters on the top surface of each lid. The lettering shall be a minimum of 1-inch high and raised to 0.0625-inch. The weight bearing flanges of the fiberglass pit liner and the aluminum cover frame (and lid) shall be machined to assure uniform weight distribution.

2.12.4 Pit Cover Materials, Design, and Testing

The cover frames and lids shall be designed and manufactured by a qualified company having a minimum of five years successful experience in the production of similar airport apron slab fixtures. All cover lids and frames shall be designed using an appropriate cast aluminum alloy or rolled aluminum plate to support an aircraft wheel load simulated by a roving 200,000-pound test-load applied perpendicular to a 200-square-inch contact area (10 inches by 20 inches) of the cover's top surface. The aluminum alloy material selected for design shall be ductile, corrosion-resistant, impact-resistant, and suitable for the intended use. All covers shall be non-skid surface construction and free of injurious defects. Welding for the purpose of structural repair of casting defects shall not be allowed. Minor cosmetic welding is acceptable. The cover shall be capable of supporting the test-load without failure regardless of the location or orientation of the load. Localized yielding or cracking or excessive deformations shall be considered as failure. Actual load-tests shall be performed on a minimum of 10 percent of all the covers supplied. Load-tested units shall be randomly selected. Load-test conditions shall model field-installed conditions as nearly as practicable. The 200 Kip test-load shall be applied to the cover for a minimum duration of 5 minutes. Absolute maximum deflection of the cover lid under the test-load shall not exceed 1/180th of the interior diameter of the fiberglass pit body. Maximum deflection of the cover lids) remaining after removal of the test load shall be $\pm$ 0.010-inches to assure that no permanent set has taken place. Upon removal of the test-load, the cover lid and frame shall be carefully examined for cracks or localized areas of permanent deformation. All results shall be submitted for review and approval. A single failure to meet any of the stated criteria shall be considered sufficient grounds for the testing of 50 percent of the units.

2.12.5 Pipe Riser Seal

The riser pipe penetration through the pit floor shall be sealed by means of a Buna-N boot. The boot shall be secured to a metal collar welded to the pipe riser and to a flange at the floor opening by stainless steel clamps. Collar shall be fabricated from the same material as the pipe.

2.13 OPERATING AND BULK TANK LEVEL INDICATOR

The level indicating system must perform hydrostatic tank gauging. The level indicating system must use only a single differential pressure transducer to measure all the various locations required for the primary measurement. The level indicating system must be able to measure and compute fuel level, fuel density, fuel actual volume, fuel and water corrected volume and fuel and ambient temperature. The reference point for all level measurements must be from the tank's datum plate. The system must attach to the tank's 6-inch stilling well to minimize the effects of turbulence on the measurements and still allow the government access to take quality control samples. The level indicating system must be able to measure in underground, aboveground and cut and cover tanks with all floor and roof types. The level indicating system must be able to measure multiple tanks with a single field interface unit. The level indicating system must be able to determine whether the tank is issuing or receiving fuel while in the transfer mode and also with the same unit be able to perform leak detection. The level indicating system must require no periodic calibration after installation is complete. The level indicating system must be approved for installation in a hazardous area and certified intrinsically safe by an approved agency and provide lightning protection. The level indicating system must be able to interface with government owned information systems.

Level accuracy $\pm$ 0.05 inches
Corrected volume accuracy $\pm$ 0.1%
Density accuracy $\pm$ 1%
Temperature accuracy $\pm$ 1 degree F

It will be a ITT/Barton type Automatic Tank Gauging System. The system uses nitrogen gas to sense the level of fluid in the tanks at all times.

2.14 OPERATING AND BULK TANK LEVEL SWITCHES

System shall be designed and installed in such a way that the system shall be continuously and automatically self-checking without manual check. Electronic level sensors shall be thermistors or optic type, and be intrinsically safe Class I, Division 1, Group D for hazardous environments, with recognized FM,CSA or UL approval. Both high and high-high electronic level sensors shall be contained in a single multi-sensor holder/junction box. The sensor holder/junction box shall be accessible from the tank top or stairway. The low level sensor shall be contained in a single-sensor holder/junction box which shall be accessible from the dike floor. All level switches shall be mounted close to the tank shell as practical (utilizing piping elbows) to eliminate blockage of stair passageways.

2.14.1 Electronic Level Alarms

Level alarms shall be mechanically and electrically independent and be totally isolated from the gauging system. Two electronic high level alarms

shall be provided for each tank. A High Level Alarm (HLA) shall be set at approximately 90 percent of the safe tank filling height and be arranged to actuate an audible alarm signal located where shown on the drawings and an indicator light at the control panel. A High High Level Alarm (HHLA) shall be set at approximately 95 percent of the safe filling height. HHLA shall actuate an audible and visual alarm where shown on the drawing and an indicator light at the control panel. One electronic low level alarm (LLA) shall be installed on each of the six tanks. The LLA shall be set at the level indicated on the drawings.

2.14.2 Level Alarm Control Modules

Modules shall be located within a stand-alone, wall mounted, hinged enclosure and is designated the Tank Level Alarm Panel (TAP) on the drawings. Each module shall be individually mounted in the TAP and shall contain one light and one relay output for each alarm point. An audible alarm at the Pump Control Panel (PCP) shall actuate whenever any alarm point has been reached. Each module shall further contain a green (Power ON) status light. The alarm reset at the PCP shall terminate the alarms specified in Paragraph - Electronic Level Alarms. The indicator lights on the alarm module shall remain on until the fuel level has dropped below their set point levels. Panel shall operate with 115 VAC input power from the PCP. Circuitry and cables from the panel to the electronic level sensors in the tank shall be intrinsically safe. Circuitry from alarm contacts to the PLC inputs in the PCP shall be as indicated. Manufacturer of PCP shall fabricate the TAP, refer to section 15970 "Pump Control and Annunciation System". Units shall have provisions to check level switch operation without increasing the fuel level in the tanks.

2.15 Water Draw-off system

The water draw-off systems are existing.

PART 3 EXECUTION

3.1 GENERAL

3.1.1 Installation

Install equipment and components in position, true to line, level and plumb, and measured from established benchmarks or reference points. Follow manufacturer's recommended practices for equipment installation. Provide required clearances between equipment components. Equipment, apparatus, and accessories requiring normal servicing or maintenance to be accessible.

3.1.2 Anchoring

Anchor equipment in place. Check alignment of anchor bolts before installing equipment and clean-out associated sleeves. Do not cut bolts because of misalignment. Notify Contracting Officer of errors and obtain the Contracting Officer's acceptance before proceeding with corrections. Cut anchor bolts of excess length to the appropriate length without damage to threads. Where anchor bolts or like devices have not been installed, provide appropriate self-drilling type anchors for construction condition.

3.1.3 Grouting

Equipment which is anchored to a pad to be grouted in place. Before

setting equipment in place and before placing grout, clean surfaces to be in contact with grout, including fasteners and sleeves. Remove standing water, debris, oil, rust, and coatings which impair bond. Clean contaminated concrete by grinding. Clean metal surfaces of mill scale and rust by hand or power tool methods. Provide necessary formwork for placing and retaining grout. Grout to be non-metallic, non-shrink, fluid precision grout of a hydraulic cementitious system with graded and processed silica aggregate, Portland cement, shrinkage compensating agents, plasticizing and water reducing agents; free of aluminum powder agents, oxidizing agents and inorganic accelerators, including chlorides; proportioned, pre-mixed and packaged at factory with only the addition of water required at the project site. Grouting shall be in accordance with ASTM C 827. Perform all grouting in accordance with equipment manufacturer's and grout manufacturer's published specifications and recommendations.

3.1.4 Leveling and Aligning

Level and align equipment in accordance with respective manufacturer's published data. Do not use anchor bolt, jack-nuts or wedges to support, level or align equipment. Install only flat shims for leveling equipment. Place shims to fully support equipment. Wedging is not permitted. Shims to be fabricated flat carbon steel units of surface configuration and area not less than equipment bearing surface. Shims to provide for full equipment support. Shim to have smooth surfaces and edges, free from burrs and slivers. Flame or electrode cut edges not acceptable.

3.1.5 Direct Drives

Alignment procedure follows:

3.1.5.1 Rotation Direction and Speed

Check and correct drive shaft rotation direction and speed.

3.1.5.2 End Play

Run drive shafts at operational speed. Determine whether axial end play exists. Run drive shaft at operational speed and mark drive shaft axial position when end play exists. Block drive shaft in operating position when aligning drive shaft with driven shaft.

3.1.5.3 Shaft Leveling and Radial Alignment

Check shaft leveling by placing a spirit level across the half faces. Radially align shafts by placing a straightedge across the two coupling half faces in both horizontal and vertical planes.

3.1.5.4 Angular Alignment and End Clearance

Check angular alignment and end clearance by inserting a feeler gage at 4 points, 90 degrees apart around outer edges of coupling halves.

3.1.5.5 Final Recheck

Check adjustments with dial indicator after completing recheck. Align shafts within 0.001 inch tolerance, except as other-wise required by more stringent requirements of equipment manufacturer.

3.1.6 Precautions

Special care shall be taken by the Contractor to insure that equipment and materials are stored properly to prevent damage and maintain cleanliness, and that the completed system is free of rocks, sand, dirt and foreign objects.

Equipment brought to the site and not stored inside, shall be stored on blocks or sawhorses at least 18 inches above ground.

Visual inspection shall be made of each piece of equipment to ensure that it is clean prior to installation.

The open ends of equipment shal be closed when work with that piece of equipment is not in progress.

3.2 INSTALLATION OF UNDERGROUND TANKS

Installation shall be per tank manufacturer's recommendations, API RP 1615, NFPA 30, EPA 40 CFR Part 280, state and local codes and as specified herein. If recommendations require tank to be filled, only fuel will be allowed in tanks. Water filling is not acceptable. Before being placed in service, tank shall be tightness tested in accordance with NFPA 30.

3.2.1 Coating

The coating shall be examined for flaws and tested for thickness. The Contractor shall provide the facilities, personnel, and equipment for testing for flaws and thickness. Thickness shall be measured electronically. Coating shall be tested directly before placement of the tank with an electric flaw detector, equipped with a bell, buzzer, or other type of audible signal that operates when a flaw is detected. The detector for the type of coating used shall have an operating voltage of 10,000 to 35,000 volts. Check of the holiday detector potential may be made by the Contracting Officer at any time to determine the suitability of the detector. Damaged areas shall be repaired with materials identical to those used originally, and after drying, shall be retested electrically.

3.2.2 Steel Tanks

a. Cover the concrete hold down slab with 6 inches of tank bedding backfill evenly graded and thoroughly compacted, prior to tank placement.

b. Each tank is to be unloaded and placed on the sand bed using cranes and the rigging procedures provided by the tank manufacturer. Use the tank lifting lugs for lifting the tank into place. The use of slings around the tank is not permitted, nor is the use of chock blocks of any sort. During handling, carefully inspect the tanks for coating damage and repair any damage whatsoever before proceeding. After placement, check each tank to ensure it is sloped as required. The elevation shall be confirmed.

c. Before proceeding with backfill, install the hold down straps and tighten the turnbuckles securely and evenly throughout the length of the tanks. The bottom and sides of the tanks to be fully and evenly supported by hand shoveling and tamping. Use tank bedding backfill up to 12 inches above the top of tank. Hand-guided power equipment can be used to place

fill in 6-inch layers, compacted to a minimum of 95 percent maximum density, after the bottom quadrant is filled. A minimum of four density tests per tank to be performed. Clean, noncorrosive, well tamped gravel to be used for backfill from a point 12 inches above the tanks to finished grade.

d. Do not fill the tank, even partially, before the bottom quadrant is backfilled. The level of fuel product not to exceed the level of compacted backfill at any time.

e. Coordinate tank installation with the installation of cathodic protection.

## 3.3 INSTALLATION OF FIBERGLASS PITS

The Contractor shall submit recommended installation procedures and setting tolerances from the pit manufacturer/supplier for the fiberglass pit and the aluminum cover. These procedures shall indicate recommended methods of supporting the pit in its proper position in the open excavation prior to and during concrete placement operations. Also, required installation tolerances, especially for flatness/levelness of the fiberglass pit lip, shall be provided. The Contractor shall follow these recommendations and shall apply other procedures as required to ensure the integrity of the pit liner and cover assemblies in their installed positions. All penetrations through the fiberglass pit liner shall be tightly sealed by suitable means to preclude water infiltration, with consideration for potential relative movements between the penetrating objects and the pit liner. Reference the Contract drawings for additional installation requirements.

## 3.4 POSTED OPERATING INSTRUCTIONS

For each designated system or equipment item, provide instructions for guidance of operating and maintenance personnel. Following approval of content, prepare these instructions in a form and scale that will be readily legible when displayed in appropriate locations, to be designated by the Contracting Officer and meet the following requirements:

### 3.4.1 Each System

For each system, include diagrams of equipment, piping, wiring and control. Define control sequences.

### 3.4.2 Each Tank

For each tank provide certified tank calibration chart in 1/8-inch increments reading in gallons.

### 3.4.3 Each Item

For each equipment item, include starting, adjustment, operation, lubrication, safety precautions and shut-down procedures. Identify procedures to be performed in event of equipment failure. Provide other instructions recommended by the manufacturer.

3.4.4 Diagrams

The Contractor shall provide a professionally prepared isometric piping diagram of the fueling system apparatus. Diagram shall be 36 inches x 54 inches and shall be color coded to match PCP color diagrams. Diagram shall show the entire facility and shall include all equipment and the operational sequences of all equipment with equipment numbers displayed. Diagram shall show all valves along with the valve numbers shown on the drawings and listed as normally open/closed. It shall be wall mounted under glass.

3.4.5 Volume of Fuel

The Contractor shall provide a certified system inventory of fuel in the pipe, tank, pumphouse, etc. The piping will show length of pipe, size of pipe, gallons per foot, and total gallons. Verify during initial fill.

-- End of Section --

SECTION TABLE OF CONTENTS

DIVISION 15 - MECHANICAL

SECTION 15051

PANTOGRAPHS

**04/99; Rev 10/03**

PART 1 GENERAL

1.1 REFERENCES
1.2 SUBMITTALS

PART 2 PRODUCTS

2.1 DESIGN CONDITIONS
2.2 CONSTRUCTION FOR AIRCRAFT PANTOGRAPHS
2.3 HIGH REACH PANTOGRAPHS
2.4 CONSTRUCTION FOR TRUCK FILL STAND PANTOGRAPHS
2.5 CONSTRUCTION FOR TRUCK FILL STAND PANTOGRAPHES (RECESSABLE)
2.6 SIZE CRITERIA
2.7 DESIGN REQUIREMENTS
2.7.1 Flanged Swivel Joint
2.7.2 Flow Meter
2.7.3 Spring-loaded Casters
2.7.4 Sampling and Drain Assembly
2.7.5 Pressure gage assembly
2.7.6 Venting Assembly
2.7.7 Hydrant Coupler
2.7.8 Shut-Off Valve With Strainer
2.7.9 Compact Swivel Joint
2.7.10 Pressure Fueling Nozzle
2.7.11 Venturi
2.7.11.1 Fuel Sensing Line and Hose
2.7.12 Pressure Control Valve
2.7.13 JP8+100 Fuel Injector Assembly and Accessories
2.7.14 Fuel Monitor
2.8 MATERIALS
2.8.1 Stainless Steel Piping
2.8.2 Fitting and Bends
2.8.3 Components
2.8.4 Structural Steel
2.9 ASSEMBLY

PART 3 EXECUTION

3.1 INSTALLATION

-- End of Section Table of Contents --

SECTION 15051

PANTOGRAPHS
**04/99; Rev 10/03**

PART 1 GENERAL

1.1 REFERENCES

The publications listed below form a part of this specification to the extent referenced. The publications are referred to in the text by basic designation only.

U.S. GENERAL SERVICES ADMINISTRATION (GSA)

| | |
|---|---|
| CID A-A-50696 | (Basic) Reels, Static Discharge, Grounding, 50 and 75 Foot Cable Lengths |

U.S. DEPARTMENT OF DEFENSE (DOD)

| | |
|---|---|
| MIL-C-83260 | (Notice 1; Rev A) Coupler, Hydrant Valve GRU-16/e |

ASME INTERNATIONAL (ASME)

| | |
|---|---|
| ASME B16.5 | (1996) Pipe Flanges and Flanged Fittings |
| ASME B40.1 | (1991) Gauges - Pressure Indicating, Dial Type, Elastic Element |
| ASME 16 | (1998) Boiler and Pressure Vessel Section VIII, Pressure Vessels Division 1 |

ASTM INTERNATIONAL (ASTM)

| | |
|---|---|
| ASTM A 36/A 36M | (2001) Carbon Structural Steel |
| ASTM A 312/A 312M | (2002) Seamless and Welded Austenitic Stainless Steel Pipes |

AMERICAN PETROLEUM INSTITUTE (API)

| | |
|---|---|
| API 1584 | (2001) Four-Inch Hydrant System Components and Arrangements |

AIR FORCE INSTRUCTION (AFI)

| | |
|---|---|
| AFI 91-202 | (1998) United States Air Force Mishap Prevention Program |

Available at http://www.e-publishing.af.mil/ "Electronic Publications" and "United States Air Force"

SOCIETY OF AUTOMOTIVE ENGINEERS (SAE)

SAE AS5877 (2001) Nozzle, Aircraft Pressure Refueling

SAE J517 (2003) Hydraulic Hose

## 1.2 SUBMITTALS

Government approval is required for submittals with a "G" designation; submittals not having a "G" designation are for information only. When used, a designation following the "G" designation identifies the office that will review the submittal for the Government. The following shall be submitted in accordance with Section 01330 SUBMITTAL PROCEDURES:

SD-02 Shop Drawings

Scaled assembly drawings; G-AE

Scaled assembly drawings identifying components and showing dimensions and tolerances.

SD-03 Product Data

Complete technical literature shall be submitted on specific function equipment. Submittals shall include but not necessarily be limited to the following:

Flow meter; G-AE.

Hydrant coupler; G-AE.

Shut-off valve with strainer; G-AE.

Automatic pressure equalizing system; G-AE.

Pressure fueling nozzle; G-AE.

Venturi; G-AE.

Compact Swivel joint; G-AE.

Flanged swivel joint; G-AE

Sampling and drain assembly; G-AE.

Pressure gage assembly; G-AE.

Venting assembly; G-AE.

JP8+100 Fuel Injector Assembly and Accessories; G-AE.

Fuel Monitor; G-AE.

SD-07 Certificates

Materials of construction; G-AE.

SD-10 Operation and Maintenance Data

OMSI information shall be submitted for the equipment items or systems listed below. Refer to Section 01730 "Operating and Maintenance Support Information (OMSI)" for the information to be submitted for various types of equipment and systems.

Flow meter; G-AE.

Hydrant coupler; G-AE.

Shut-off valve with strainer; G-AE.

Automatic pressure equalizing system; G-AE.

Pressure fueling nozzle; G-AE.

Venturi; G-AE.

Compact Swivel joint; G-AE.

Flanged swivel joint; G-AE

Sampling and drain assembly; G-AE.

Pressure gage assembly; G-AE.

Venting assembly; G-AE.

JP8+100 Fuel Injector Assembly and Accessories; G-AE.

Fuel Monitor; G-AE.

Aircraft pantograph submitted under this specification shall have been approved by the Air Force System Safety Engineer Analysis (AFSSEA) Team in accordance with AFI 91-202. The pantograph shall be a Cla-Val Model No. 853GF-2 or equivalent. The pantograph high reach attachment shall be a Cla-Val Model No. 850GF-2A or equivalent.

## PART 2 PRODUCTS

### 2.1 DESIGN CONDITIONS

Shall be as specified in Section 15050 "Mechanical Equipment, Fueling". Components to be ASME B16.5 Class 150 (275 psig at 100 degrees F, except swivel joints and pressure fueling nozzles shall be 125 psig at 100 degrees F).

### 2.2 CONSTRUCTION FOR AIRCRAFT PANTOGRAPHS

a. The pantograph shall be designed in such a way that all wheel supports rest upon the apron regardless of the different terrain conditions.

b. The pantograph shall consist of three main sections, plus one connecting section and one dispensing end. Total length of the three main sections shall be 75 feet.

c. The connecting section shall consist of a hydrant coupler and flanged swivel joints, which allow the coupler to be connected to the hydrant control valve at levels of -± 6 inches from the level of the apron.

d. The connecting section shall be supported by an adjustable spring, counterweight balance or hydraulically actuated cylinders which balances the weight of the hydrant coupler, flanged swivel joints and pipe connecting section.

e. The dispensing end shall be designed to be coupled to the aircraft at heights of 12 inches to 8 feet above the apron.

f. The dispensing end shall be supported by an adjustable spring, weight device or hydraulically actuated cylinder to counter balance the weight of the pressure fueling nozzle, shut-off valve, swivel joints and connecting pipes to ensure that only minimum force occurs when connecting pantograph to aircraft. One person shall be able to operate the dispensing end.

g. Hoses (except fuel sensing hose) shall not be permitted as a part of the pantograph.

h. The pantograph shall be equipped with an adjustable automatic pressure equalizing system, relieving at 125 psig to an equalizing reservoir, to compensate for thermal expansion and contraction.

i. The equalizing reservoir's vent shall be equipped with a flame arrestor. The reservoir shall be sized for a maximum temperature differential of 144 degrees F.

j. The pantograph shall be equipped with supporting structures each mounted on two spring-loaded casters. The flow meter shall be provided with additional supports.

k. To avoid sagging, reinforcing shall be welded to the underside of the pipe sections.

l. A tow bar shall be attached to the front support of the pantograph. Maximum tow speed is 5 miles per hour. Tow bar to be suitable for mounting to pintle hook.

m. The connecting section and the dispensing end shall be locked to the main sections of the pantograph when in the stored or towing mode.

n. The three main sections of the pantograph shall be locked together when stored or towing.

o. The overall electrical resistance between the hydrant coupler and the pressure fueling nozzle shall not exceed 1 Kilo Ohm. Grounding straps across the swivel joints are not permitted.

p. The pantograph shall be equipped with two self winding grounding cable reels. The cable shall be at least 50 feet long. Each cable reel, the grounding cable and the connection clamp shall be in accordance with CID A-A-50696.

q. The pantograph shall be equipped with a permanent sampling and drain assembly, pressure gage assembly and venting assembly.

r. All pantograph swivel joints (flanged and compact type) shall be stainless steel single plane swivels capable of 360 degree rotation.

s. Pantograph shall be provided with 25 feet of hydraulic deadman control hose. Hose shall be provided with stainless steel fittings, nylon stop ball and aluminum deadman control handle. Hose shall be dual type with Buna-N tube, vertically braided textile body with fuel resistant neoprene cover.

## 2.3 HIGH REACH PANTOGRAPHS

a. The whole unit consists of a steel frame with spring loaded casters and a lifting platform. The pipe sections are interconnected by swivel joints.

b. The platform with the dispensing end shall be easily extended up to a connection height of 16 feet above ground level operated by hand. No electric energy shall be used. An extensionable ladder fixed at the frame allows to reach the platform at any position.

c. The platform must be secured with railing and automatically closing door.

d. The pantograph shall be equipped with devices for draining, pressure gauging and venting.

e. Support structures, counter balance system and all other equipment made of steel shall not be welded to the stainless steel pipe. It shall be only bolted by clamps to the pipe and shall be easily replaceable by common tools in case of repair or maintenance. All repair work at the construction site on the pantograph shall be possible by the LFM personnel.

2.4 CONSTRUCTION FOR TRUCK FILL STAND PANTOGRAPHS

a. Not required.

2.5 CONSTRUCTION FOR TRUCK FILL STAND PANTOGRAPHES (RECESSABLE)

a. Not required.

2.6 SIZE CRITERIA

Nominal diameters shall be as follows:

| | |
|---|---|
| Hydrant coupler | 4 inch |
| Piping sections | 3 inch and 4 inch |
| Flanged connection | ASME B16.5 150 LB. |
| Pressure control valve | 4 inch |
| Venturi | 4 inch |
| Additive Injector | 4 inch |
| Flow meter | 4 inch, ASME B16.5 150 LB. |
| Shut-off valve with 40 mesh strainer | 3 inch |
| Compact swivel joint | 3 inch |
| Flanged swivel joints | 3 inch and 4 inch |
| Pressure fueling nozzle | 2-1/2 inch outlet |

2.7 DESIGN REQUIREMENTS

2.7.1 Flanged Swivel Joint

a. Flanged swivel joints shall be capable of rotating 360 degrees. Welded swivel joints and welding of swivel joints to the pipe and/or elbow is not permitted. Swivel joints shall be of the non-lubricated type with non-lubricated bearings.

b. No leakage shall be permitted under positive or negative pressure conditions. No leakage shall be permitted under high or low temperature conditions. Welding of swivel joint to 6-bolt flange connector is permitted. The swivel joints shall be warranted for two years against leakage.

c. There shall be electrical continuity from one flange to the other without the use of ground straps.

2.7.2 Flow Meter

The flow meter shall be stainless steel or aluminum, double case, positive displacement, rotor type, bi-directional, temperature compensating. Provide an adjustor for calibrating the meter. Meter shall have large visible 5-digit reset totalizer and small visible 8-digit non-reset totalizer. The unit of measurement shall be gallons and the increment of measurement shall be one gallon.

2.7.3 Spring-loaded Casters

The pantograph shall be equipped with a minimum of eight (8) terrain spring loaded casters made of steel or cast steel, galvanized or hot-dip galvanized. The caster swivel head shall be equipped with two lubricated ball bearings with grease nipples. The wheels shall have an overall

diameter of at least 12 inches and shall be equipped with two lubricated grooved ball bearings with grease nipples. The wheels shall be coated with non-abrasive polyurethane, 90 shore or 40 Series.

a. Two of the casters shall be equipped with brakes which positively lock the unit in place once at rest.

b. Two casters shall be equipped with an additional device which can be adjusted to lock automatically for towing the pantograph.

2.7.4 Sampling and Drain Assembly

Assembly shall provide for both sampling and draining of fuel. Materials shall be Type 316 stainless steel. Assembly shall consist of a 1/2-inch ball valve and 1/2-inch quick disconnect coupling with aluminum dust cap. Material for ball valve, quick disconnect coupling shall be Type 316 stainless steel. Structural steel shall conform to ASTM A 36/A 36M, hot dipped galvanized after fabrication and painted a factory standard color. A 3-foot, fuel resistant sampling hose with mating quick disconnect fitting shall be provided.

2.7.5 Pressure gage assembly

Assembly shall consist of 4-inch ASME B40.1 pressure gage and pressure gage stop cock. Pressure gage shall be liquid filled type with an indicating range 0-275 psig. Material shall be Type 316 stainless steel.

2.7.6 Venting Assembly

Assembly shall consist of a 1/2 inch ball valve and shall terminate with a 180 degree pipe gooseneck and screwed cap.

2.7.7 Hydrant Coupler

The hydrant coupler is the connection between the hydrant system and the pantograph. It shall comply with MIL-C-83260 and API 1584. The coupler shall be provided with suitable, non-lubricated 360 degree rotation swivel joint and shall be suitable for mounting to flanged connection.

2.7.8 Shut-Off Valve With Strainer

3-inch shutoff valve with 40 mesh strainer. It shall be mounted upstream of the pressure fueling nozzle and shall provide safe shutoff of the pantograph for inspection of the strainer.

2.7.9 Compact Swivel Joint

A 3-inch compact swivel joint shall be mounted between the shut-off valve with strainer and the pressure fueling nozzle. The compact swivel shall be non-lubricated, maintenance free type. No leakage shall be permitted under positive or negative pressure conditions. No leakage shall be permitted under high or low temperature conditions. Welding of swivel joint to six-bolt flange connector is permitted. The swivel joints shall be warranted for two years against leakage. There must be electrical continuity from one flange to the other without the use of ground straps.

2.7.10 Pressure Fueling Nozzle

SAE AS5877, 2-1/2-inch straight nozzle (D-2), non-swivel, with dry-break 60 mesh strainer shall be provided for the connection between pantograph and aircraft. Design shall be for single point fueling of air crafts at a flow rate of 600 gpm with maximum pressure drop of 30 psig. Nozzle shall be provided with a permanently installed quick disconnect coupler, aluminum dust plug with chain. Gammon GTP-235-3/8 Jet Test QD meets this specification. Provide pressure gage with 0-100 psig indicating range mounted on actuator for use with quick disconnect coupler.

2.7.11 Venturi

Provide for compensated pressure regulation on each hydrant control valve. Venturi shall be constructed of stainless steel. The venturi shall be sized to compensate for pressure drop of entire pantograph assembly at minimum through maximum design flow rate. The amount of recovery shall be adjustable and the maximum unrecoverable pressure drop at 600 gpm shall be less than 10 psi. Venturi control lines shall be provided with needle valve to be used during final adjustment of pantograph. Venturi control lines shall be provided with pressure gauge and pressure gauge stop cock. Indicating range shall be 0-100 psig. Material shall be Type 316 stainless steel.

2.7.11.1 Fuel Sensing Line and Hose

Venturi shall be provided with a 3/8 inch stainless steel fuel sensing line and 8 feet of 5/16-inch fuel sensing hose. Fuel sensing line and hose shall be provided with a stainless steel plug and socket type quick disconnect for coupling together at the pantograph and opposite end of fuel sensing hose shall be provided with quick disconnect suitable for connection to hydrant control valve's pilot system. Fuel sensing hose tube and cover shall be resistant to the effects of hydrocarbon fuels and shall conform to SAE J517-100R7.

2.7.12 Pressure Control Valve

Provide 4-inch pressure control valve as specified in Section 15101.

2.7.13 JP8+100 Fuel Injector Assembly and Accessories

The JP8+100 Injector Assembly shall incorporate and include all components necessary to mechanically inject the additive into the JP-8 fuel stream at an adjustable rate of 250 ppm.

The injector assembly shall be a completely self contained 4-inch flanged unit rated for 150 ANSI service and installed at each pantograph assembly where indicated. The main housing shall be constructed of aluminum and contain a "swing vane" positive displacement fluid motor driven by teflon vanes. No externally driven pump shall be accepted. All components shall be compatible with JP-8 and the JP8+100 additive. The unit shall be passive in operation in that the injection stops when the fuel flow stops. A minimum flow of 75 GPM shall be required to start the additive injection. The injector pump shall be adjustable from 0 to 1,000 ppm minimum. The assembly shall include a flow indicator/suction strainer, a 3/4-inch inlet valve and piping all constructed of stainless steel materials. The injector assembly shall be tubed (3/8") to an included aluminum or stainless steel 10-gallon cylindrical storage tank. The storage tank be set up to mount on 4-inch pipe.

2.7.14 Fuel Monitor

The fuel monitor shall be a cylindrical constructed aluminum vessel with 4-inch F.F. flanges and rated for 275 PSIG. The maximum flow rate will be 650 GPM. A differential pressure gage shall be included to determine when the filter/monitor cartridge requires replacement. The vessel shall be designed and constructed as per ASME 16, Section VIII, Div. 1, latest revision for unfired vessels.

2.8 MATERIALS

The materials of construction which come in contact with the fuel shall be noncorrosive. No zinc coated metals, brass, bronze or other copper bearing alloys shall be used in contact with the fuel. Additional requirements are as follows:

2.8.1 Stainless Steel Piping

Schedule 10S, conforming to ASTM A 312/A 312M, seamless only.

2.8.2 Fitting and Bends

Same thickness as adjoining pipe.

2.8.3 Components

Aluminum alloy or stainless steel.

2.8.4 Structural Steel

Structural steel shall conform to ASTM A 36/A 36M, hot dipped galvanized after fabrication and painted a factory standard color.

2.9 ASSEMBLY

The pantograph shall be delivered completely assembled.

PART 3 EXECUTION

3.1 INSTALLATION

The pantograph shall be tested as described in Section 15899 SYSTEM START-UP, FUELING.

-- End of Section --

SECTION TABLE OF CONTENTS

DIVISION 15 - MECHANICAL

SECTION 15060

PIPE, MANUAL VALVES, AND FITTINGS, FUELING SYSTEM

**04/99; Rev 12/00**

PART 1 GENERAL

1.1 REFERENCES
1.2 SUBMITTALS

PART 2 PRODUCTS

2.1 DESIGN CONDITIONS
2.2 MATERIALS
2.2.1 General
2.2.2 Carbon Steel Piping
2.2.2.1 Interior Epoxy Coated Carbon Steel Piping
2.2.3 Stainless Steel Piping
2.2.4 Containment Piping System
2.2.5 Protective Coatings for Aboveground Carbon Steel Piping and Equipment
2.2.5.1 Coating Description
2.2.5.2 Mixing Epoxy-Polyamide Coatings
2.2.5.3 Induction Times
2.2.5.4 Epoxy-Polyamide Coating Application
2.2.5.5 Equipment Cleanup
2.2.5.6 Polyurethane Final Coat
2.2.5.7 Coat Colors
2.2.6 Protective Coatings for Buried Carbon Steel Piping
2.2.6.1 Open Trench Installation
2.2.6.2 Jack and Bore Installation
2.2.7 Fittings
2.2.7.1 General
2.2.7.2 Carbon Steel Fittings
2.2.7.3 Stainless Steel Fittings
2.2.7.4 Isolating Gasket Kits (Insulating) for Flanges
2.2.8 Bolts and Nuts
2.2.9 Gaskets
2.2.10 Relief and Drain System Piping
2.2.10.1 Gaskets
2.2.11 Relief and Drain System Protective Coating
2.2.12 Field Applied Protective Coatings
2.2.12.1 Welded Joints
2.2.12.2 Fittings
2.2.13 Threaded Joints
2.2.14 Welded Joints
2.3 Manual Valves
2.3.1 Ball Valves
2.3.1.1 Materials
2.3.2 Plug (Double Block and Bleed) Valves
2.3.2.1 Limit Switches

2.3.2.2 Valve Operation
2.3.2.3 Relief Valves
2.3.2.4 Bleed Valves
2.3.2.5 Valve Motor Operator
2.3.3 Swing Check Valves
2.3.3.1 Wafer Check Valves - Butterfly Design
2.4 Relief Valves
2.4.1 Materials
2.4.2 Sight Flow Indicators
2.5 PIPING ACCESSORIES
2.5.1 Flexible Ball Joints
2.5.2 Pipe Sleeves
2.5.3 Strainers
2.5.3.1 Basket Type
2.5.3.2 Cone Type (Temporary)
2.5.4 Pipe Hangers and Supports
2.5.4.1 General
2.5.4.2 Adjustable Pipe Supports
2.5.4.3 Low Friction Supports
2.5.4.4 Concrete and Grout
2.5.5 Sample Connections
2.5.5.1 Sampling Hoses
2.5.6 Flanged Swivel Joints
2.5.7 Pantographs
2.5.8 Monitoring Points
2.5.9 Pressure Fueling Nozzle
2.5.10 Nozzle Adapter (SPR)
2.6 FLEXIBLE HOSES
2.7 SURGE ABSORBER TANKS

PART 3 EXECUTION

3.1 WELDING
3.1.1 General
3.1.2 Qualifications of Welders
3.1.2.1 Weld Identification
3.1.2.2 Defective Work
3.1.3 Tests
3.1.3.1 Radiographic Inspection
3.1.4 Standards of Acceptance
3.1.5 Corrections and Repairs
3.1.5.1 Defect Removal
3.1.5.2 Methods of Defect Removal
3.1.5.3 Rewelding
3.1.5.4 Peening or Caulking
3.2 INSTALLATION
3.2.1 Precautions
3.2.2 Protective Coatings
3.2.2.1 Application of Tape Wrapping
3.2.2.2 Inspection and Testing
3.2.2.3 Damage Repair
3.3 INTERIOR EPOXY COATING
3.4 VERIFICATION OF DIMENSIONS
3.5 CLEANING OF PIPING
3.6 TRENCHING AND BACKFILLING
3.7 INSTALLATION OF UNDERGROUND PIPE
3.7.1 Pipe Assembly
3.7.2 Warning Tapes in Earth Trenches
3.7.3 Clearances

3.7.4 Protective Coating
3.8 PIPING LAYOUT REQUIREMENTS
3.8.1 Pipe Fabrication
3.8.2 Interferences and Measurements
3.8.3 Space and Access
3.8.4 Location
3.8.5 Piping and Equipment
3.8.6 Structural Support
3.8.7 Grade
3.8.8 Size Changes
3.8.9 Direction Changes
3.9 TESTING
3.9.1 General
3.9.1.1 Pneumatic Test Procedure
3.9.1.2 Hydrostatic Test
3.9.2 Performance Testing
3.10 Pipeline Pigging Procedure and Equipment
3.10.1 Geometry Tool Reports
3.10.2 Workmanship
3.10.3 Pipeline Internal Inspection Operations
3.10.3.1 General
3.10.3.2 Preparatory Work
3.10.3.3 Pig Load And Launch
3.10.3.4 Pipeline Operation During Pigging
3.10.3.5 Brush and Gauging Survey
3.10.3.6 Geometry Survey

-- End of Section Table of Contents --

SECTION 15060

PIPE, MANUAL VALVES, AND FITTINGS, FUELING SYSTEM
**04/99; Rev 12/00**

PART 1 GENERAL

1.1 REFERENCES

Waiver to Use MilStds and MilSpecs in Air Force Fuel Projects, HQ AFCESA/CESM (01/29/96.

The publications listed below form a part of this specification to the extent referenced. The publications are referred to in the text by basic designation only.

AMERICAN NATIONAL STANDARDS INSTITUTE (ANSI)

| | |
|---|---|
| ANSI Z49.1 | (1988) Safety in Welding and Cutting |

AMERICAN PETROLEUM INSTITUTE (API)

| | |
|---|---|
| API SPEC 5L | (2000) Line Pipe |
| API SPEC 6D | (1994) Pipeline Valves (Gate, Plug, Ball, and Check Valves) |
| API STD 594 | (1997) Check Valves: Wafer, Wafer-lug and Double Flanged Type |
| API STD 607 | (1993) Fire Test for Soft-Seated Quarter-Turn Valves |
| API STD 608 | (1995) Ball Valves |
| API RP 1110 | (1997) Pressure Testing of Liquid Petroleum Pipeline |

AMERICAN SOCIETY OF MECHANICAL ENGINEERS (ASME)

| | |
|---|---|
| ASME-16 | (1998) Boiler and Pressure Vessel Code; Section VIII, Pressure Vessels DIVISION 1 |
| ASME-17 | (1995) Boiler and Pressure Vessel Code; Section IX, Welding and Brazing Procedures, Welders, Brazers, and Welding and Brazing Operators |
| ASME B1.1 | (1989) Unified Inch Screw Threads (UN and UNR Thread Form) |
| ASME B16.5 | (1996) Pipe Flanges and Flanged Fittings |
| ASME B16.9 | (1993) Factory-Made Wrought Steel Buttwelding Fittings |

| | |
|---|---|
| ASME B16.11 | (1996) Forged Fittings, Socket-Welding and Threaded |
| ASME B16.21 | (1992) Nonmetallic Flat Gaskets for Pipe Flanges |
| ASME B18.2.1 | (1996) Square and Hex Bolts and Screws Inch Series |
| ASME B18.2.2 | (1999) Square and Hex Nuts (Inch Series) |
| ASME B31.1 | (2001) Power Piping |
| ASME B31.3 | (1996) Process Piping / with Addenda |
| ASME BPV VIII | (1998) Boiler and Pressure Vessel Code; Section VIII, Pressure Vessels |

AMERICAN SOCIETY OF TESTING AND MATERIALS (ASTM)

| | |
|---|---|
| ASTM A 53/ A 53M | (1999b) Pipe, Steel, Black and Hot-Dipped, Zinc-Coated Welded and Seamless |
| ASTM A 105/A 105M | (1998) Carbon Steel Forgings for Piping Applications |
| ASTM A 181/A 181M | (1995b) Carbon Steel Forgings, for General Purpose Piping |
| ASTM A 182/A 182M | (2000b) Forged or Rolled Alloy-Steel Pipe Flanges, Forged Fittings, and Valves and Parts for High-Temperature Service |
| ASTM A 193/A 193M | (2000e1) Alloy-Steel and Stainless Steel Bolting Materials for High-Temperature Service |
| ASTM A 194/A 194M | (2000) Carbon and Alloy Steel Nuts for Bolts for High-Pressure or High-Temperature Service, or Both |
| ASTM A 234/A 234M | (2000) Piping Fittings of Wrought Carbon Steel and Alloy Steel for Moderate and Elevated Temperature Service |
| ASTM A269 | (2000) Seamless and Welded Austenitic Stainless Steel Tubing for General Service |
| ASTM A 312/A 312M | (2000b) Seamless and Welded Austenitic Stainless Steel Pipe |
| ASTM A 358/A 358M | (2000) Electric-Fission-Welded Austonitic Chromium-Nickel Alloy Steel Pipe for High-Temperature Service |
| ASTM A 403/A 403M | (2000a) Wrought Austenitic Stainless Steel |

| | |
|---|---|
| | Piping Fittings |
| ASTM D229 | (1996) Rigid Sheet and Plate Materials Used for Electrical Insulation |
| ASTM E94 | (2000) Radiographic Testing |
| ASTM F436 | (1993) Hardened Steel Washers |

AMERICAN WELDING SOCIETY (AWS)

| | |
|---|---|
| AWS A2.4 | (1998) Symbols for Welding, Brazing and Nondestructive Examination |
| AWS A3.0 | (1994) Standard Welding Terms and Definitions |
| AWS A5.1 | (1991) Carbon Steel Electrodes for Shielded Metal Arc Welding |
| AWS A5.5 | (1981) Low-Alloy Steel Covered Arc Welding Electrodes |
| AWS A5.9 | (1999) Specification for Bare Stainless Steel Welding Electrodes and Rods |

FEDERAL SPECIFICATIONS (FS)

| | |
|---|---|
| FS L-C-530 | (Rev C) Coating, Pipe, Thermoplastic Resin or Thermosetting Epoxy |
| FS L-T-1512 | (Rev A; Reinst) Tape, Pressure Sensitive Adhesive, Pipe Wrapping |

INSTITUTE OF ELECTRICAL AND ELECTRONICS ENGINEERS (IEEE)

| | |
|---|---|
| IEEE C62.41 | (1991) Surge Voltages in Low-Voltage AC Power Circuits |

MANUFACTURERS STANDARDIZATION SOCIETY OF THE VALVE AND FITTINGS INDUSTRY (MSS)

| | |
|---|---|
| MSS SP-58 | (1993) Pipe Hangers and Supports-Materials, Design and Manufacture |
| MSS SP-69 | (1999) Pipe Hangers and Supports-Selection and Application |

MILITARY SPECIFICATIONS (MS)

| | |
|---|---|
| MS MIL-PRF-4556 | (Rev F) Coating Kit, Epoxy, for Interior of Steel Fuel Tanks |
| MS MIL-N-5877 | (Rev E) Nozzle, Pressure Fuel Servicing, Locking, Type D-1, D-2, D-2R Nominal 2-1/2 inch diameter |
| MS MIL-P-24441/GEN | (Rev B; Am 1, Supple 1) Paint, Epoxy-Polyamide |

MILITARY STANDARDS (MIL-STD)

| | |
|---|---|
| MIL-STD-161 | (Rev F; Notice 2) Bulk Petroleum Products System Including Hydrocarbon Missile Fuels |
| MIL-STD-271 | (Rev F) Nondestructive Testing Methods |
| MIL-STD-24484 | (Rev J) Adapter, Pressure Fuel Servicing, Nominal 2.5 inch diameter |

NATIONAL FIRE PROTECTION ASSOCIATION (NFPA)

| | |
|---|---|
| NFPA 30 | (2000) Flammable and Combustible Liquids Code |

SOCIETY OF AUTOMOTIVE ENGINEERS (SAE)

| | |
|---|---|
| SAE J 514 | (1999) Hydraulic Tube Fittings, Standard |
| SAE AMS 3275 | (Rev. B, 1999) Sheet Acrylonitrile Butadiene (NRB) Rubber and Non-Asbestos Fiber Fuel and Oil Resistant |

STEEL STRUCTURES PAINTING COUNCIL (SSPC)

| | |
|---|---|
| SSPC SP 3 | (1982; Rev. Sep 2000) Power Tool Cleaning |
| SSPC SP 5 | (2000) White Metal Blast Cleaning |

U.S. GENERAL SERVICES ADMINISTRATION (GSA)

| | |
|---|---|
| FED-STD-595A | Colors used in Government Procurement |

## 1.2 SUBMITTALS

Government approval is required for submittals with a "G" designation; submittals not having a "G" designation are for information only. When used, a designation following the "G" designation identifies the office that will review the submittal for the Government. The following shall be submitted in accordance with Section 01330 SUBMITTAL PROCEDURES:

SD-03 Product Data

Pipe; G-AE.

Containment Piping System; G-AE

Fittings; G-AE.

Manual Valves; G-AE.

Relief Valves; G-AE

Surge Absorber Tanks; G-AE

Valve Motor Operator;G-AE

Pressure Fueling Nozzle;G-AE

Nozzle Adapter;G-AE

Flexible Ball Joints; G-AE.

Strainers; G-AE.

Flexible Hoses; G-AE.

Lightning Surge Arrester; G-AE.

Epoxy Lining; G-AE.
(Coating)

Protective Coatings; G-AE.

Top Coat Color Sample; G-AO

Provide top coat color samples to Contracting Officer.

Sample Connections; G-AE.

Isolating Gasket Kits; G-AE.

Gaskets; G-AE.

Purge Blocks; G-AE.

Pipeline Pigging Procedure and Equipment; G-AE.

Manufacturer's Catalog Data

SD-06 Test Reports

Pneumatic Test

Hydrostatic Test

SD-07 Certificates

Qualifications of Welders

Pipe

Fittings

Manual Valves

Pipe/Fitting Inspector-Owners (factory)

Pipe Weld Radiograph Inspector's Certification;
(for field welds).

Surface Preparation;

(interior).

Epoxy Polyamide Coating Application

Isolating Gasket Kits

Epoxy Manufacturer's Representative's certification

Grade

Provide survey of final elevation of buried fuel pipe - include elevation at each joint, elbow and tee.

Pipeline Pigging Procedure and Equipment

SD-10 Operation and Maintenance Data

Operation and Maintenance Manuals; G-AE.

Operation and maintenance information shall be submitted for the equipment items or systems listed below. Refer to Section 01730 FACILITY OPERATION AND MAINTENANCE MANUAL for the information to be submitted for various type of equipment and systems.

Manual Valves
Flexible Ball Joints
Surge Absorber Tanks
Strainers
Protective Coatings
Sample Connections
Isolating Gasket Kits
Gaskets
Flexible Hoses

## PART 2 PRODUCTS

### 2.1 DESIGN CONDITIONS

Design conditions shall be as specified in Section 15050 MECHANICAL EQUIPMENT, FUELING SYSTEM.

### 2.2 MATERIALS

#### 2.2.1 General

Pipe and fittings in contact with fuel shall be stainless steel or interior epoxy coated carbon steel as indicated on the drawings. No zinc coated metals, brass, bronze or other copper bearing alloys shall be used in contact with the fuel. All carbon steel and stainless steel underground piping shall have a protective coating and shall be cathodically protected in accordance with Section 13112A CATHODIC PROTECTION SYSTEM (IMPRESSED CURRENT). Identification of piping shall be in accordance with MIL-STD-161 unless specified otherwise. Material for manual valves shall be as specified hereinafter.

2.2.2 Carbon Steel Piping

Each length of pipe shall be subjected to factory hydrostatic testing and ultrasonic testing in accordance with their respective pipe specification.

a. Piping 12-Inches and Larger: Seamless, ASTM A 53/ A 53M Grade B having a wall thickness of 0.375-inch.

b. Piping 2 1/2-Inches through 10-Inches: Seamless, Schedule 40 API SPEC 5L Grade B or ASTM A 53/ A 53M Grade B.

c. Piping Two-Inches and Smaller: Seamless, Schedule 80 API SPEC 5L Grade B or ASTM A 53/ A 53M Grade B.

d. Welding Electrodes: E70XX low hydrogen electrodes conforming to AWS A5.1 or AWS A5.5.

2.2.2.1 Interior Epoxy Coated Carbon Steel Piping

Interior epoxy lining system shall be factory applied and in accordance with MS MIL-PRF-4556, six to eight mils dry film thickness. Documentation of conditions during application shall be submitted to the Contracting Officer. Surface preparation - before applying the epoxy coating, the inside of the pipe shall be sandblasted to "white" metal conforming with SSPC SP 5. If the pipe is not internally epoxy lined immediately after cleaning, a rust preventative coating shall be applied. The rust preventative shall be approved by the epoxy manufacturer. The ends of the pipe shall be masked or wiped back a minimum of one inch but not more than one and one-half inches. After the top coat has cured, the internal epoxy lining shall be tested electrically using an approved holiday detector and shall be free of holidays. The ends of the pipe shall then be capped. The shop doing the application shall have a minimum of five years of experience at applying internal epoxy coating. The application and holiday testing at the shop shall be available for inspection at any time by the Contractor or Contracting Officer. The shop shall notify the Contractor and the Contracting Officer at least one week before the pipe and fittings will be cleaned and epoxy coated. Epoxy Manufacturer's Representative's Certification - The Contractor shall provide a certified technical representative of the epoxy manufacturer to make at least three separate inspection trips with at least one day in the shop per trip. Each trip report shall be submitted to the Contracting Officer.

2.2.3 Stainless Steel Piping

a. Piping 2 1/2-Inches and Larger:

(1) ASTM A 358/A 358M, Grade 304L, Class 1 or Class 3 with supplementary requirements of S1, S2 and S3, or ASTM A 312/A 312M Type 304L, seamless (only). Any agreements between the purchaser and the manufacturer or supplier as referenced in the applicable ASTM shall include the Contracting Officer as a party to the agreement. All piping welds will receive 100 percent radiographic inspection, 100 percent liquid penetrant inspection, 100 percent visual inspection and all tests as required by the applicable ASTM Standard. Piping shall be provided with a nominal wall thickness as shown in Table A for ASTM A 358/A 358M with the deviation from the nominal

wall thickness less than 0.01-inch. ASTM A 312/A 312M seamless piping shall be provided with a minimum schedule 10S wall thickness.

(2) Pipe Ends: All Piping shall be provided with beveled ends per Chapter V, ASME B31.3, and shall be shipped with the ends capped.

(3) Seam and End Welds: All sections of the piping provided shall be accepted on the project site if the seam welds meet the requirements of the paragraph K341 of ASME B31.3 and Appendix 4 of ASME-16. One hundred spots may be reinspected at the project site prior to installation and backfilling at the request of the Contracting Officers Representative. End welds shall be properly aligned prior to welding per Chapter V of the ASME B31.3. Welds found to be defective shall be repaired as per Chapter V of the ASME B31.3 at no additional cost to the government. Observation by the Contracting Officers Representatives of the manufacturing and field procedures shall be allowed under this contract.

(4) Welders Qualifications: Piping shall be welded in accordance with qualified procedures using performance qualified welders and welding operators. Procedures and welders shall be qualified in accordance with ASME-17. Welding procedures qualified by another employer may be accepted as permitted by ASME B31.1. The Contracting Officer shall be notified 24 hours in advance of tests and the tests shall be performed at the work site if practical. The welder or welding operator shall apply his assigned symbol near each weld he makes as a permanent record.

(5) Factory Testing and Inspection Records: Per Table K341.3.2A of Chapter IX of ASME B31.3, visual, radiographic and liquid penetrant tests shall be performed for each section of piping provided as all sections are subjected to cyclic conditions. All testing and inspections records shall be submitted to the Contracting Officers Representative and shall indicate the pipe mark and installed location of each piping section on the project site. Observation by the contracting Officers Representatives of the manufacturers and the fields testing and inspection procedures shall be allowed under this contract. Pipe certification along with pipe markings shall be submitted before the pipe arrives on the job site.

(6) Welding Inspectors for Stainless Steel Piping: The contractor shall submit the qualifications of all the testing personnel that will perform all field tests as requested by the Contracting Officer. The qualifications of all personnel on the job site that will perform welding inspection shall be submitted for approval. These inspectors shall meet the qualifications as defined in Chapter VI of the ASME B31.3, and may use the methods as defined in Table K341.3.2 B of the ASME B31.3. The inspectors shall submit a Pipe Weld Radiograph Inspector's Certification for approval.

(7) Pipe/Fitting Inspector-Owners (Factory) - The Contractor shall provide a qualified inspector in accordance with Chapter VI of ASME B31.3 to act as the owner's inspector (for the Government) at the pipe manufacturer's facility in addition to the manufacturer's inspector.

(8) Quality Assurance Plan shall be submitted for the welding, inspecting and testing of the welded pipe.

TABLE A

| Nominal Pipe Size | Nominal (Average) Pipe O.D. | Wall Thickness(tn) |
|---|---|---|
| 16 in. | 16.000 in. | 0.312 in. |
| 14 in. | 14.000 in. | 0.312 in. |
| 12 in. | 12.750 in. | 0.250 in. |
| 10 in. | 10.750 in. | 0.250 in. |
| 8 in. | 8.625 in. | 0.250 in. |
| 6 in. | 6.625 in. | 0.219 in. |
| 4 in. | 4.500 in. | 0.219 in. |
| 2 1/2 in. | 2.875 in. | 0.156 in. |

b. Piping Two-Inches and Smaller: Schedule 80 ASTM A 312/A 312M seamless Type 304L for threaded piping and schedule 40 (unless otherwise indicated) ASTM A 312/A 312M seamless Type 304L for welded piping. All piping shall be shipped with the ends capped.

c. Stainless Steel Control Tubing: Seamless, fully annealed tubing conforming to ASTM A269, Grade TP316, Rockwell hardness B80 or less. Wall thickness for 1/2-inch tubing to be 0.049-inch.

d. Welding Electrodes: E308L conforming to AWS A5.9.

2.2.4 Containment Piping System

Containment piping shall be used for the 2-inch stainless steel drain lines between the pumphouse and the Product Recovery Tank. The double wall pipe systems shall include all fittings and shall be a factory prefabricated system. Submit certification that manufacturer has a minimum of 5 years in the design and manufacture of containment piping systems.

a. Containment piping shall be ASTM 53, 4-inch Schedule 40 carbon steel.

b. Containment piping, including connections, shall be of full welded construction and shall be liquid tight. Piping shall be rated for 275 psig.

c. Containment piping shall be sized to contain the fuel carrier pipe with sufficient clearance for field assembly and thermal expansion/contraction.

d. Fuel carrier pipe shall be supported within the containment piping. Pipe supports shall be fixed to prevent movement during transportation, installation and operation. Pipe supports shall be constructed of a material that is compatible with the fuel carrier pipe and will provide a positive electrical ground from carrier pipe to containment pipe. Pipe supports shall allow liquid to drain.

e. Containment pipe connectors for field welding shall be buttweld or an overlap weld design. Connectors shall be designed to withstand all mechanical forces.

f. End seals shall be provided as indicated.

g. All containment piping shall have the exterior protected with a coating as detailed in subpart 2.2.6.

2.2.5 Protective Coatings for Aboveground Carbon Steel Piping and Equipment

Provide coating of aboveground piping, piping in pits, pipe supports, filter separators, and miscellaneous metal and equipment in accordance with MS MIL-P-24441/GEN and the instructions that follow. Color of finish coat within the Tank Storage/Pump House Areas shall be beige - "Langley Special Beige" (no applicable federal standard number). All aboveground piping outside of the Tank Storage/Pump House Areas shall be brown - "Langley Brown" FED-STD-595A color number 20100. Color samples must be submitted and identically match current color characteristics. Do not paint stainless steel or aluminum surfaces. Surface Preparation - surfaces including those that have been shop coated, shall be solvent cleaned. Surfaces that contain loose rust, loose mill scale, and other foreign substances shall be cleaned mechanically with power tools according to SSPC SP 3. Cleaning shall be performed in sections or blocks small enough to permit application of the epoxy-polyamide prime coat during the same work shift. Shop-coated surfaces shall be protected from corrosion by treating and touching up corroded areas immediately upon detection.

2.2.5.1 Coating Description

Epoxy-polyamide coatings consist of a two component system that includes a pigmented polyamide resin portion (A component) and an epoxy resin portion (B component). Once they are mixed together and applied as a paint film, the coating cures to a hard film by chemical reaction between the epoxy and polyamide resins. Epoxy-polyamide coating (MS MIL-P-24441/GEN) consists of individual formulations, for example, Formula 150 is for green primer, and Formula 152 is for white topcoat.

2.2.5.2 Mixing Epoxy-Polyamide Coatings

Epoxy-polyamide coatings are supplied in measured amounts that must be mixed together in exact proportions to ensure the correct and complete chemical reaction. Mix no more paint than can be applied in the same day. The estimated pot life is 3-4 hours for 5 gallons at 70-80$^{\circ}$ F. Discard any mixed paint remaining at the end of the day.

a. Mixing Ratio. The mixing ratio of the MS MIL-P-24441/GEN coatings (except Formula 159) are all 1:1 by volume, for example, 5 gallons of component A to 5 gallons of component B. The mixing ratio of MS MIL-P-24441/GEN for formula 159 is 1:4 by volume.

b. Mixing Procedures. Each component shall be thoroughly stirred prior to mixing the components together. After mixing equal volumes of the two components, this mixture shall again be thoroughly stirred until well blended. The induction time shall be adhered to, to ensure complete chemical reactions. Induction time is defined as the time immediately following the mixing together of components A and B during which the critical chemical reaction period of these components is initiated until the mixture is ready for application. This reaction period is essential to ensure the complete curing of the coating. Volumetric mixing spray equipment with in-line heaters set at 70 to 80$^{\circ}$ F (21 to 28$^{\circ}$ C) may be used

without an induction period.

2.2.5.3 Induction Times

The temperature of the paint components in storage should be measured to determine induction time and pot life. Pot life is the usable life of the mixed paint. It is dependent upon the temperature and the volume of the mixed paint. The pot life of a five gallon mixture of the MS MIL-P-24441/GEN paints at 70-80EF is approximately 4 hours. The job site application temperature will affect the time required for the paint to cure, and must be considered in estimating induction time, cure time, and the effect of batch size on these functions. At 40 to 60$^{o}$ F a 1 hour induction time shall be used. Volumetric mixing spray equipment with in-line heaters set at 70 to 80$^{o}$ F may be used without an induction period. To ensure that the reaction proceeds uniformly, the paint should be manually stirred periodically during its induction period. This prevents localized overheating or hot spots within the paint mixture.

2.2.5.4 Epoxy-Polyamide Coating Application

Epoxy-polyamide coatings, MS MIL-P-24441/GEN, may be applied by brushing or spraying.

a. Thinning Application. Ordinarily, MS MIL-P-24441/GEN coatings are not thinned. If necessary, up to one pint of epoxy thinner for each gallon of mixed paint may be added if paint has thickened appreciably during cold temperature application or if necessary to improve application characteristics. When applied at the proper thickness, without thinning, these paints will have no tendency to sag.

b. Application Thickness. Unless otherwise specified, apply each coat of paint to produce approximately 3 mils dry film thickness (DFT). Application which yields in excess of 4.0 mils DFT should be avoided to prevent sagging.

c. Spray Application. MS MIL-P-24441/GEN paints should be sprayed with conventional spray guns and normal spray-pot pressures. The spray gun should be equipped with a middle-size (D) needle, and nozzle setup. Both conventional and airless spray equipment are suitable for use with or without volumetric mixing capability.

2.2.5.5 Equipment Cleanup

The mixed paint should not be allowed to remain in spray equipment for an extended period, especially in the sun of a warm area. The paint cures more rapidly at higher temperatures. When components A and B are mixed together, the pot life of the mixture (including the induction time is 6 hours at 70$^{o}$ F (21$^{o}$ C). Pot life is longer at lower temperatures and shorter at temperatures above 70$^{o}$ F (21$^{o}$ C). Spray equipment should be cleaned after using by flushing and washing with epoxy thinner or aromatic hydrocarbon thinners (xylene or high flash aromatic naphtha). General cleanup is also done by using these solvents. Brushes and rollers should be given a final cleaning in warm soapy water, rinsed clean with warm fresh water and hung to dry.

2.2.5.6 Polyurethane Final Coat

All aboveground piping and equipment shall receive a final coat of polyurethane as specified in Section 09971.

2.2.5.7 Coat Colors

All three coats shall be of a different color. The epoxy-polymade primer shall be (Formula 150) green, the topcoat shall be (Formula 152) white and the final polyurethane coat shall be beige or brown as noted above.

2.2.6 Protective Coatings for Buried Carbon Steel Piping

2.2.6.1 Open Trench Installation

Provide pipe with a FS L-C-530 coating system of factory-applied adhesive undercoat and continuously extruded plastic resin coating; minimum thickness of plastic resin shall be 36 mils for pipe sizes 6 inches and larger. Fittings, couplings, irregular surfaces, damaged areas of pipe coating, and existing piping affected by the Contractor's operations shall be clean, dry, grease free, and primed before application of tape. Tape shall overlap the pipe coating not less than three inches. Waterproof shrink sleeves may be provided in lieu of tape and shall overlap the pipe coating not less than six inches. Pipe coating and adhesive undercoat surfaces to be wrapped with tape shall be primed with a compatible primer prior to application of tape. Primer shall be as recommended by tape manufacturer and approved by pipe coating manufacturer.

a. Damaged Areas of Pipe Coating: Provide FS L-T-1512, 20 mils nominal thickness of tape over damaged areas. Residual material from damaged areas of pipe coating shall be pressed into the break or trimmed off. Apply tape spirally with one-third overlap as tape is applied. A double wrap of one full width of tape shall be applied at right angles to the axis to seal each end of the spiral wrapping.

b. Fittings, Couplings, and Regular Surfaces: Provide FS L-T-1512, 10 mils nominal thickness tape overlapped not less than 1.0 inch over damaged areas. Initially stretch and apply first layer of tape to conform to component's surface. Then apply and press a second layer of tape over first layer of tape.

c. Testing of Protective Coatings: Perform tests with an approved silicone rubber electric wire brush or an approved electric spring coil flaw tester. Tester shall be equipped with an operating bell, buzzer, or other audible signal which will sound when a holiday is detected at minimum testing voltage equal to 1,000 times the square root of the average coating thickness in mils. Tester shall be a type so fixed that field adjustment cannot be made. Calibration by tester manufacturer shall be required at six-month intervals or at such time as crest voltage is questionable. Certify in writing the calibration date and crest voltage setting. Maintain the battery at ample charge to produce the crest voltage during tests. Areas where arcing occurs shall be repaired by using material identical to original coating or coating used for field joints. After installation, retest the exterior surfaces, including field joints, for holidays. Promptly repair holidays.

2.2.6.2 Jack and Bore Installation

The carrier pipe shall receive the same coating as detailed in above paragraph 2.2.6.1. The casing pipe shall not be coated.

2.2.7 Fittings

2.2.7.1 General

Welding ells, caps, tees, reducers, etc., to be of materials compatible for welding to the pipe line in which they are installed, and wall thickness, pressure and temperature ratings of the fittings shall be not less than the adjoining pipe line. Unless otherwise required by the conditions of installation, all elbows shall be the long radius type. Miter joints shall not be acceptable. Make odd angle offsets with pipe bends or elbows cut to the proper angle. Butt weld fittings to be factory-made wrought fittings manufactured by forging or shaping. Fabricated fittings will not be permitted. Welding branch fittings shall be insert type suitable for radiographic inspections specified herein.

2.2.7.2 Carbon Steel Fittings

a. Fittings 2-1/2 Inches and Larger: Butt weld, conforming to ASTM A 234/A 234M, grade WPB and ASME B16.9 of the same wall thickness as the adjoining pipe. All welds shall be radiographically examined throughout the entire length of each weld. Each fitting shall be subjected to the Supplementary Requirements S3 and S4, Liquid Penetration examination and Magnetis-Particle Examination. Detectable flaws will not be accepted in the supplementary examinations. Fittings shall be identified to relate them to their respective radiograph.

b. Fittings 2 Inches and Smaller. Forged (socket welded or if indicated on drawings, threaded), 2,000-pound W.O.G., conforming to ASTM A 105/A 105M, Grade 2 and ASME B16.11. Threaded fittings shall only be used for above grade applications. Underground low point drain pipe and high point vent pipe shall be butt welded.

c. Flanges: One-hundred-fifty-pound weld neck, forged flanges conforming to ASTM A 181/A 181M, Grade 2, and ASME B16.5, except flanges that are to be connected to the hydrant or bulk fuel pumps shall be 300-pound. Flanges to be 1/16-inch raised face with phonographic finish, except where required otherwise to match equipment furnished. Match flange face to valves or equipment furnished. Flange face shall be machined to match valves or equipment furnished. Use of spacing rings or gaskets discs are not allowed. Flanges shall be subjected to the Supplementary Requirements S4 and S5, Liquid Penetrant Examination, and Magnetic-Particle Examination. Detectable flaws will not be accepted.

d. Interior Epoxy Coating System shall be applied to the fittings as specified in paragraph "Carbon Steel Piping."

2.2.7.3 Stainless Steel Fittings

a. Fittings 2-1/2 Inches and Larger: Butt weld stainless steel conforming

to ASTM A 403/A 403M, Class WP, Type 304L, seamless or welded, and ASME B16.9 of the same minimum wall thickness as the adjoining pipe. Welded fittings shall be tested and inspected the same as the welded seam pipe and meet the same requirements as for the pipe.

b. Fittings 2-Inches and Smaller: Forged Type 304 or 304L (socket welded or if indicated on drawings, threaded), 2,000-pound W.O.G. conforming to ASTM A 182/A 182M and ASME B16.11. Threaded fittings shall only be used for above grade applications. Underground low point drain pipe and high point vent pipe shall be butt welded.

c. Unions. Conforming to ASTM A 312/A 312M, Grade 304 or 316.

d. Flanges. One-hundred-fifty-pound weld neck, forged Type 304 or 304L stainless steel flanges conforming to ASTM A 182/A 182M and ASME B16.5. Flanges to be 1/16-inch raised-face with phonographic finish, except where required otherwise to match equipment furnished. Match flange face to valves or equipment furnished. Flanges shall be subjected to the Supplementary Requirements S4, Liquid Penetrant Examination.

e. Stainless Steel Tube Fittings. Flareless, 316 stainless steel fittings conforming to SAE J 514.

2.2.7.4 Isolating Gasket Kits (Insulating) for Flanges

Provide ASTM D229 electrical insulating material of 1,000 ohms minimum resistance; material shall be resistant to the effects of aviation hydrocarbon fuels. Provide full face insulating gaskets between flanges. Provide full surface 0.03-inch thick wall thickness, spiral-wound mylar insulating sleeves between the bolts and the holes in flanges; bolts may have reduced shanks of a diameter not less than the diameter at the root of threads. Provide 0.125-inch thick high-strength phenolic insulating washers next to flanges and provide flat circular stainless steel washers over insulating washers and under bolt heads and nuts. Provide bolts 0.5-inch longer than standard length to compensate for the thicker insulating gaskets and the washers under bolt heads and nuts. Exterior above grade flanges separated by electrically isolating gasket kits shall be provided with weatherproof Lightning Surge Arrester devices. The surge arrester shall bolt across flanges separated by insulating gasket kits per detail on contract drawings. The arrestor shall have the following features:

a. Weatherproof NEMA 4 enclosure.
b. Bidirectional and bipolar protection.
c. Constructed of solid state components, no lights, fuses or relays shall be used that will require maintenance or replacement.
d. Withstand unlimited number of surges at 50,000 Amperes.
e. Maximum clamping voltage of 700 Volts based on a IEEE C62.41 8x20 microsecond wave form at 50,000 Amperes peak measured at the device terminals (zero lead length).
f. A UL listed arrester for installation in Class 1, Division 2, Group D, hazardous areas is preferred if available.

Install the mounting bracket and leads on the flange side of the bolt insulating sleeve and washer, and size in accordance with this schedule.

| Line Size (Inches) | Bolt Size (Inches) |
|---|---|
| 2 | 5/8 |
| 2-1/2 | 5/8 |
| 3 | 5/8 |
| 4 | 5/8 |
| 6 | 3/4 |
| 8 | 3/4 |
| 10 | 7/8 |
| 12 | 7/8 |
| 14 | 1 |
| 16 | 1 |

(Note: Allowance must be made for the 1/32-inch thickness of the insulating sleeve around the bolts when sizing the mounting lugs.)

2.2.8 Bolts and Nuts

Bolts and nuts for pipe flanges, flanged fittings, valves and accessories shall conform to ASME B18.2.1 and ASME B18.2.2, except as otherwise specified. The bolts and nuts shall be manufactured of the same general material (carbon steel or stainless steel) as the pipe. Bolts shall be of sufficient length to obtain full bearing on the nuts and shall project no more than two full threads beyond the nuts with the bolts tightened to the required torque. Bolts shall be regular hexagonal bolts conforming to ASME B18.2.1 with material conforming to ASTM A 193/A 193M, Grade B7. Bolts for stainless steel service must be Class II, Grade B8. Bolts shall be threaded in accordance with ASME B1.1, Class 2A fit, Coarse Thread Series, for sizes one inch and smaller and Eight-Pitch Thread Series for sizes larger than one inch. Nuts shall conform to ASME B18.2.2, hexagonal, heavy series with material conforming to ASTM A 194/A 194M, Grade 8. For carbon steel service, the nuts shall be Grade 7. Nuts shall be threaded in accordance with ASME B1.1, Class 2B fit, Coarse Thread Series for sizes one inch and smaller and Eight-Pitch Thread Series for sizes larger than one inch. Provide washers under bolt heads and nuts. Washers to be ASTM F436, flat circular stainless steel. Torque wrenches shall be used to tighten all flange bolts to the torque recommended by the gasket manufacturer. Tightening pattern shall be as recommended by the gasket manufacturer. Anti-seize compound shall be used on stainless steel bolts.

2.2.9 Gaskets

ASME B16.21, composition ring, using a Buna-N binder, 0.1250-inch thick. Gaskets shall be resistant to the effects of aviation hydrocarbon fuels and manufactured of fire-resistant materials. Full-face gaskets shall be used for flat-face flanged joints. Ring gaskets shall be used for raised-face flanged joints. Gaskets shall be of one piece factory cut.

2.2.10 Relief and Drain System Piping

Pressure relief valve discharge lines and drain lines to the product recovery tank shall be Schedule 40 ASTM A 312/A 312M seamless Type 304L Stainless Steel.

2.2.10.1 Gaskets

See Gaskets specified herein before.

2.2.11 Relief and Drain System Protective Coating

Pipe shall be factory coated as specified herein before for steel piping.

2.2.12 Field Applied Protective Coatings

The field joints and fittings of all underground piping shall be coated as herein specified.

2.2.12.1 Welded Joints

Heat shrinkable radiation-cross-linked polyolefin wraparound type sleeves shall be applied to all welded joints. Joints shall not be coated until pressure testing is complete. Apply sleeves consisting of 40 mil polyolefin backing and 40 mil thermoplastic mastic adhesive in accordance with the manufacturer's instructions.

2.2.12.2 Fittings

Fittings and other irregular surfaces shall be tape wrapped. The tape shall be a plastic mastic laminated tape having 6 mil plastic backing of either polyethylene or polyvinylchlorine and 29 to 44 mil of synthetic elastomer.

2.2.13 Threaded Joints

Threaded joints, if indicated on the drawings, shall be made tight with manufacturer recommended teflon tape or a mixture of graphite and oil, inert filler and oil, or with a graphite compound, applied with a brush to the male threads. Not more than three threads shall show on made up joints. Threaded joints, mechanical couplings and flanges will not be permitted in buried piping. Threaded joints shall not get welded.

2.2.14 Welded Joints

Welded joints in steel pipe shall be as specified in Part 3 "EXECUTION."

2.3 Manual Valves

All portions of a valve coming in contact with fuel in stainless steel or carbon steel pipe lines shall be of noncorrosive material. Valves in stainless steel pipe lines shall be Type 304 or Type 316 stainless steel or carbon steel internally plated with chromium or nickel or internally electroless nickel plated. Valves with stainless steel bodies shall be provided only where indicated in 2-inch or smaller stainless steel piping runs. Stem and trim shall be stainless steel for all valves. Manually operated valves six inches and larger shall be worm-gear operated and valves smaller than six inches shall be wrench operated. Valves smaller than two inches shall have lever-type handles. Valves installed more than eight (8) feet above finished floor shall have chain operators and a position indicator visible from ground level. Sprocket wheel for chain operator shall be aluminum.

2.3.1 Ball Valves

Ball valves shall be fire tested and qualified in accordance with the requirements of API STD 607 and API STD 608. Ball valves shall be nonlubricated valves that operate from fully open to fully closed with 90

degree rotation of the ball. Valves two inches and larger shall conform to applicable construction and dimension requirements of API SPEC 6D, ANSI Class 150 and shall have flanged ends. Valves smaller than 2 inches shall be ANSI class 150 valves with one piece bodies with flanged ends. The balls in valves 10 inches and larger with full port and 12 inch and larger with regular port shall have trunnion type support bearings. Except as otherwise specified, reduced port or full port valves may be provided at the Contractor's option. All valves shall include solid-machined balls. Valves shall be self-relieving to ensure ease of operation in high temperature conditions.

2.3.1.1 Materials

Ball shall be stainless steel. Ball valves shall have tetrafluoroethylene (TFE) or Viton seats, body seals and stem seals. Valves 2 inches and smaller shall have a locking mechanism that locks the valve both open and closed.

2.3.2 Plug (Double Block and Bleed) Valves

API SPEC 6D, Type III, ANSI Class 150, non-lubricated, resilient, double seated, trunnion mounted, tapered lift plug capable of two-way shutoff. Valve shall have carbon steel body with chrome-plated interior, tapered plug of steel or ductile iron with chrome or nickel plating and plug supported on upper and lower trunions. Sealing slips shall be steel or ductile iron, with Viton seals which are held in place by dovetail connections. Valve design shall permit sealing slips to be replaced from the bottom with the valve mounted in the piping. Valves shall operate from fully open to fully closed by rotation of the handwheel to lift and turn the plug. Valves shall have weatherproof operators with mechanical position indicator flags of metal construction. Operators on valves sized at 6-inch and larger shall include a right angle self-locking gear operated handwheel. All operators shall have a stainless steel indicator shaft. Minimum bore size shall be not less than 65 percent of the internal cross sectional area of a pipe of the same nominal diameter unless bore height of plug equals the nominal pipe diameter and manufacturer can show equal or better flow characteristics of the reduced bore size design. Full bore (pigable) sized diameters shall be provided for the 12-inch plug valves located at the "temporary" pig launcher, the "temporary" pig receiver and the hydrant system isolation valve pits.

2.3.2.1 Limit Switches

Plug valves in the operating tank suction lines and the four-valve manifold shall be provided with factory-installed limit switches that are actuated by the valve closure. Each switch shall have double pole double throw contacts, and shall be watertight and U.L. listed for Class I, Division 1, Group D hazardous areas with (T3-392 F) temperature limitation. The limit switches must indicate both fully open and fully closed positions. Include field-installed extended indicator shaft.

2.3.2.2 Valve Operation

Rotation of the handwheel toward open shall lift the plug without wiping the seals and retract the sealing slips so that during rotation of the plug clearance is maintained between the sealing slips and the valve body. Rotation of the handwheel toward closed shall lower the plug after the sealing slips are aligned with the valve body and force the sealing slips against the valve body for positive closure. When valve is closed, the

slips shall form a secondary fire-safe metal-to-metal seat on both sides of the resilient seal. Plug valves located in Isolation Valve Pits shall be provided with handwheel extensions.

2.3.2.3 Relief Valves

ANSI Class 150. Provide plug valves with automatic thermal relief valves to relieve the pressure build up in the internal body cavity when the plug valve is closed. Relief valves shall open at 25 psi differential pressure and shall discharge to the throat of, and to the upstream side, of the plug valve.

2.3.2.4 Bleed Valves

ANSI Class 150, stainless steel body valve. Provide manually operated bleed valves that can be opened to verify that the plug valves are not leaking when in the closed position.

2.3.2.5 Valve Motor Operator

The 2-inch plug valve located at the hydrant loop issue and return crossover shall be motor operated to allow automated system pressure checks. The actuator, controls and accessories shall be the responsibility of the valve-actuator supplier for sizing, assembly, certification, field-testing and any adjustments necessary to operate the valve as specified. The electric valve actuator shall include as an integral unit the electric motor, actuator unit gearing, limit switch gearing, position limit switches, torque switches, drive bushing or stem nut, declutch lever, wiring terminals for power, remote control,indication connections and handwheel. The electrically actuated plug valve shall be set to open and close completely in 45 seconds minimum against a differential pressure of 275 PSIG. The actuator settings of torque, turns and limit contacts shall be set or adjusted without opening or removing any electrical compartment covers. Diagnostic information shall be accessible through an integrally mounted display window and non-instrusive means. The valve actuator shall be suitable for mounting in a vertical or horizontal position and be rated for 60 starts per hour.

a. The actuator shall be suitable for use on nominal 220-volts, 3-phase, 60HZ power supply.

b. The electrical enclosure shall be rated NEMA 4X and be suitable for operation in a Class I, Division 1, Groups C and D location.

c. The electric motor shall be specifically designed for valve actuator service and shall be totally enclosed, non-ventilated construction. The motor shall be capable of complete operation at plus or minus 10% of specified voltage. Motor insulation shall be a minimum NEMA Class F. The motor shall be a removable subassembly to allow for motor or gear ratio changes as dictated by system operational requirements. The motor shall be equipped with an embedded thermostat to protect against motor overload and also be equipped with space heaters. It shall de-energize when encountering a jammed valve.

d. The reversing starter, control transformer and local controls shall be integral with the valve actuator and suitably housed to prevent breathing or condensation buildup. The electromechanical starter shall be suitable for 60 starts per hour. The windings shall have short circuit and overload protection. The transformer shall be equipped to supply all internal

circuits and 24 VDC output or alternate 110 VAC where required for remote controls.

e. The actuator gearing shall be totally enclosed in an oil-filled gearcase. Standard SAE80EP gear oil shall be used to lubricate the gearcase.

f. The actuator shall integrally contain local controls for Open, Close and Stop and a local/remote selector switch padlockable in three positions: Local Control Only, Off and Remote Control plus Local Stop Only. A metallic handwheel shall be provided for emergency operation. The handwheel drive must be mechanically independent of the motor drive.

g. Position limit switches shall be functional regardless of main power failure or manual operation. Four contacts shall be provided with each selectable as normallly open or normally closed. The contacts shall be rated at 5A, 120 VAC, 30 VDC.

h. Each valve actuator shall be provided with an electronic microprocessor based control unit (field unit) as an integral part of the valve actuator enclosure. The field unit shall be connected to a PLC supplied by "others".

i. A non-intrusive hand-held computer must be included that is capable of two-way communication for uploading and downloading all actuator variables and performing detailed diagnostics.

j. The actuator shall be supplied with a start-up kit comprising installation instruction, electrical wiring diagram and spare cover screws and seals.

k. The actuator must be performance tested and a test certificate shall be supplied at no extra charge. The test should simulate a typical valve load with current, voltage, torque and speed measured.

### 2.3.3 Swing Check Valves

Swing check valves shall conform to applicable requirements of API SPEC 6D, regular type, ANSI Class 150 with flanged end connections. Check valves shall be tilting disc, non-slam type with carbon steel body and 316 stainless steel trim. Discs and seating rings shall be renewable without removing the valve from the line. The disc shall be guided and controlled to contact the entire seating surface.

#### 2.3.3.1 Wafer Check Valves - Butterfly Design

Spring assisted, designed to prevent flow reversal slamming of valve, and shall conform to API STD 594, except face to face dimensions may deviate from the standard. Body shall be one-piece, lug style, full body design, threaded bolting, wafer type installed between flanges where indicated on the drawings. Body material shall be carbon steel and all internals shall be 316 stainless steel with Buna-N seats. Dual plates to be closed by spring action. Valves shall be suitable for installation in the horizontal or vertical position. Valves to be installed at all hydrant pump discharges, beneath all surge suppressors and where noted on the drawings.

## 2.4 Relief Valves

Relief valves shall be the fully enclosed, spring loaded, angle pattern, single port, hydraulically operated type with plain caps, and shall be

labeled in accordance with ASME-16. Valve stems shall be fully guided between the closed and fully opened positions. The valves shall be factory-set to open at the set pressure indicated on the drawings. Operating pressure shall be adjustable by means of an enclosed adjusting screw. The valves shall have a minimum capacity of 20 GPM at 10 percent overpressure and shall operate at rated capacity with a back pressure not exceeding 50 psi. Valves shall have a replaceable seat.

### 2.4.1 Materials

Valves shall have carbon steel bodies and bonnets with stainless steel springs and trim. Valves shall be Class 150 flanged end connections.

### 2.4.2 Sight Flow Indicators

Sight flow indicators shall be ANSI Class 150 and shall have flanged end connections. Sight flow indicators shall consist of a housing containing a rotating propeller that is visible through a glass observation port. The housing shall be stainless steel. The glass in the indicator shall also meet the Class 150 rating. The indicator down stream of the Pressure Control Valve (PCV) shall contain a bi-directional flapper instead of a propeller.

## 2.5 PIPING ACCESSORIES

### 2.5.1 Flexible Ball Joints

Flexible ball joints shall be stainless steel, capable of 360-degree rotation plus 15-degree angular flex movement, ASME B16.5, Class 150 flanged end connections. Provide pressure molded composition gaskets designed for continuous operation temperature of 275 degrees F. Joints shall be designed for minimum working pressure of ANSI Class 150.

### 2.5.2 Pipe Sleeves

Pipe sleeves shall be installed at all points where the piping passes through concrete construction. Such sleeves shall be of sufficient inside diameter to provide a minimum clear distance between the pipe and the sleeve of approximately one and one/half-inches. Sleeves through concrete pits or slabs shall be standard weight carbon steel pipe with a protective coating. Each sleeve shall extend through the respective pit wall or slab by the dimensions as noted on the drawings. Sleeves where piping passes under roads or piping indicated to be double walled shall be standard weight carbon steel pipe with a protective coating as previously specified. Alignment of the sleeve and piping shall be such that the pipe is accurately centered within the sleeve by a nonconductive centering element. The sleeve shall be securely anchored to prevent dislocation. Closure of space between the pipe and the pipe sleeve shall be by means of a mechanically adjustable segmented elastomeric seal. The seal shall be installed so as to be flush. In addition to the segmented elastomeric seal, both ends of the pipe sleeve shall include sleeves fastened with stainless steel attachment bands. The exterior sleeve shall be a fuel resistant shrink type and the interior shall be a Buna-N boot collar in accordance with SAE AMS 3275.

2.5.3 Strainers

2.5.3.1 Basket Type

No basket strainers required.

2.5.3.2 Cone Type (Temporary)

Strainer shall be stainless steel type 304 or 316, 60 mesh screen with the ratio of net open area of strainer to the area of the connecting pipe shall be not less than one to one.

2.5.4 Pipe Hangers and Supports

2.5.4.1 General

Pipe hangers and supports shall conform to MSS SP-58 and MSS SP-69. Supports shall be provided at the indicated locations. Support channels for drain lines shall be epoxy coated on all surfaces or hot-dip galvanized after the channels are cut to length. Coated supports shall be coated with fusion bonded epoxy resin applied by the fluidized bed method. Thickness of the coating shall be not less than 10 mils. Surface preparation and coating application shall be in accordance with the epoxy manufacturer's instructions. The coating shall be pinhole free when tested with a low voltage holiday detector set at no more than 100 times the mil thickness of the coating. All pinholes shall be marked, repaired and retested to ensure a pinhole free film. The coating material shall be a 100 percent solids, thermosetting, fusion-bonded, dry powder epoxy resin. The manufacturer shall certify that the material is suitable for fluidized bed application and that it is approved by the Environmental Protection Administration.

2.5.4.2 Adjustable Pipe Supports

Adjustable pipe supports shall consist of a cast iron saddle and a threaded nipple connected to a carbon steel pipe by means of a special reducer conforming to MSS SP-69. The supports shall be provided with neoprene insulation strips.

2.5.4.3 Low Friction Supports

Low friction supports shall be self-lubricating antifriction element composed of reinforced TFE. Units shall be factory designed and manufactured.

2.5.4.4 Concrete and Grout

Concrete and grout for anchors and supports shall comply with SECTION 03300 CAST-IN-PLACE STRUCTURAL CONCRETE.

2.5.5 Sample Connections

Sample connections shall be factory assembled units specifically designed for obtaining representative samples from fuel pipelines. Each connection shall include a 1/4-inch sampling probe where the probe faces upstream, ball valve and 1/4-inch quick disconnect coupling with dust plug, all assembled into a unit that is suitable for installation in a pipe nipple. The sampling probe shall extend not less than one inch into the fuel pipe. All materials in the sample connections shall be stainless steel or aluminum.

2.5.5.1 Sampling Hoses

Furnish two sampling hose assemblies to the Contracting Officer at the project site. Each assembly shall consist of a six-foot length of 1/4-inch clear plastic tubing with internal bonding/grounding wire. One end of the tubing will contain a male connector that actuates flow when inserted into the quick disconnect coupler. Each end of the bonding/grounding wire shall be equipped with clips for attaching to the pipe and metal sample container.

2.5.6 Flanged Swivel Joints

Not required.

2.5.7 Pantographs

a. See Section 15051.

2.5.8 Monitoring Points

At the following locations, provide half-inch pipe, flanged ball valve, and blind flange for future test equipment connections:

a. At the outlet side of PCV-1 in the pumphouse.

b. At the Hydrant Hose Truck Checkout, inlet to Hydrant Valve.

c. At the inlet and outlet to the Back Pressure Control Valve in the Pumphouse.

d. At both sides of the isolation valve in all the isolation valve pits.

2.5.9 Pressure Fueling Nozzle

Nozzles shall conform to MS MIL-N-5877, Type D-2. Nozzles and nozzle components shall be compatible with the fuel to be handled. Nozzles shall be provided with an internal 60 mesh stainless steel strainer and a fuel sample connection tapping. Nozzle design shall be for single point fueling of aircraft. Nozzles shall be provided with a compatible dry break quick disconnect swivel. Coupler shall allow for quick disconnect and reconnect of fueling nozzles with corresponding adapters. Coupler and adapter shall provide a positive, leak proof connection under constant or surge flow. Coupler shall be designed to prevent blowout of internal poppet.

2.5.10 Nozzle Adapter (SPR)

Adapter shall be a nominal 2-1/2 inches with self-closing valve in accordance with MIL-STD-24484. Adapter shall have a 4 inch flange mounting and metal sealing, vacuum tight, locking dust cap using the SPR lugs.

The 2 1/2 inch nozzle adapter (SPR)located at isolation valve pit IVP-S3 for pantograph flushing shall be constructed of stainless steel and rated at 275 psig.

## 2.6 FLEXIBLE HOSES

Flexible hoses for fueling pumps shall have ANSI Class 300 flanges of stainless steel construction conforming to ASME B16.5. Flexible hoses shall be of stainless steel flexible metal hose consisting of an inner corrugated stainless steel tube with stainless steel braid cover. All components to be suitable for not less than 275 psig. Length and application of flexible hoses shall be per manufacturer's written recommendations.

## 2.7 SURGE ABSORBER TANKS

The unit shall be fabricated from carbon steel and shall be an internally coated pressure vessel with a rubber bladder or a stainless steel diaphragm separating the fuel from the gas charge. The epoxy coating shall be in accordance with MS MIL-PRF-4556. The rubber bladder shall be molded synthetic nitrile rubber (Buna-N). The unit shall be constructed and labeled in accordance with ASME BPV VIII. The absorber tank shall be designed for a maximum working pressure of 275 psig. The gas precharge shall be dry nitrogen. Bladder precharge pressure shall be 90 psig at the equipment pad and truck fill stands. The connection to the piping system shall be a Class 150 ANSI flange, size as indicated on the drawings. The connection shall have a lug type wafer check valve to provide unrestricted flow into the vessel. Before installation, one of the check valve plates shall have a 1/4-inch hole drilled through the plate to allow fuel to slowly vacate the suppressor tank after a surge event. The surge suppressor piping assembly shall have 1-inch welding branches reduced to 3/4-inch NPT connections, a 3/8" NPT needle valve and tubing to incrementally meter fuel from the absorber tank. A 3/8-inch NPT ball valve shall relieve fluid pressure during gas recharging and drain the suppressor tank before removal. A charging assembly shall be provided consisting of a pressure gauge, gas valve and an adapter for field charging. The surge tank supplier shall furnish a service person trained to provide installation check-out assistance and to supervise operation and testing necessary to place the surge control system into service.

# PART 3 EXECUTION

## 3.1 WELDING

### 3.1.1 General

All joints unless indicated otherwise, in carbon steel and stainless steel piping systems shall be welded. Unless otherwise approved, all girth welds shall be complete penetration groove welds made in accordance with qualified welding procedures. Welding operations, qualifications of welders and welding procedures shall comply with the provisions of ASME B31.3 and the requirements specified herein. The root pass on stainless steel and carbon steel pipe shall be by the GMAW or GTAW process using inert gas purge. Both GMAW and GTAW use front shield gas, however, the back shield gas (back purge) is optional. Fluxed welding rods (coated or cored) shall not be allowed.

a. Definitions shall be in accordance with AWS A3.0.

b. Symbols shall be in accordance with AWS A2.4 for welding and nondestructive testing, unless otherwise indicated.

c. Safety Precautions shall conform to ANSI Z49.1.

d. Weld Preparation shall comply with the requirements of ASME B31.3 and the qualified Welding Procedure Specification. The use of "rice paper" as purge blocks is not permitted. Contractor shall submit alternate method for approval.

e. Backing Rings. The use of backing rings for making or repairing welds will not be permitted.

3.1.2 Qualifications of Welders

Welders and welding procedures shall be qualified in accordance with requirements of ASME B31.3.

3.1.2.1 Weld Identification

Each qualified welder shall be assigned an identification symbol. All welds shall be permanently marked with the symbol of the individual who made the weld.

3.1.2.2 Defective Work

Welders found making defective welds shall be removed from the work or shall be required to be requalified in accordance with ASME B31.3.

3.1.3 Tests

All steel pipe field welds, including high point vent pipe and low point drain pipe, shall be examined by radiographic methods to determine conformance to the paragraph "Standards of Acceptance." The services of a qualified commercial or testing laboratory approved by the Contracting Officer shall be employed by the Contractor for testing of piping welds. Costs of testing, including retesting or repaired welds, shall be borne by the Contractor.

3.1.3.1 Radiographic Inspection

Procedures for radiographic inspection shall be in accordance with MIL-STD-271 or ASTM E94. Weld ripples or surface irregularities that might mask or be confused with the radiographic image of any objectional defect shall be removed by grinding or other suitable mechanical means. The weld surface shall be merged smoothly with the base metal surface.

3.1.4 Standards of Acceptance

Interpretation of test results and limitations on imperfections in welds shall comply with the requirements for 100 percent Radiography, per ASME B31.3, Chapter VII, Table K341.3.2A.

3.1.5 Corrections and Repairs

Defects shall be repaired in accordance with approved procedures. Defects discovered between passes shall be repaired before additional weld material is deposited. Whenever a defect is removed and repair by welding is not required, the affected area shall be blended into the surrounding surface so as to avoid sharp notches, crevices, or corners. After a defect is thought to have been removed, and prior to rewelding, the area shall be examined by suitable methods to insure that the defect has been eliminated.

After repairs have been made, the repaired area shall be reinspected and shall meet the standards of acceptance for the original weld. Any indication of a defect shall be regarded as a defect unless reevaluation by nondestructive methods and/or by surface conditioning shows that no defect is present.

3.1.5.1 Defect Removal

Defective or unsound weld joints shall be corrected by removing and replacing the entire weld joint, or for the following defects corrections shall be made as follows:

a. Excessive Convexity and Overlap: Reduce by removal of excess metal.

b. Excessive Concavity of Weld, Undersized Welds, Undercutting: Clean and deposit additional weld metal.

c. Excessive Weld Porosity, Inclusions, Lack of Fusion, Incomplete Penetration: Remove defective portions and reweld.

d. Crack in Weld or Base Metal: Remove crack throughout its length, including sound weld metal for a distance of twice the thickness of the base metal or two inches, whichever is less, beyond each end of the crack, followed by the required rewelding. Complete removal shall be confirmed by magnetic particle inspection for carbon steel or liquid penetrant inspection for stainless steel. Inspection procedures shall comply with the requirements of ASME B31.3.

e. Poor Fit-Up: Cut apart improperly fitted parts, and reweld.

3.1.5.2 Methods of Defect Removal

The removal of weld metal or portions of the base metal shall be done preferably by chipping, grinding, sawing, machining, or other mechanical means. Defects also may be removed by thermal cutting techniques. If thermal cutting techniques are used, the cut surfaces shall be cleaned and smoothed by mechanical means. In addition, at least 1/8-inch of metal shall be removed by mechanical means from the cut surfaces of stainless steel.

3.1.5.3 Rewelding

Repair welds shall be made using an electrode or filler wire preferably smaller than that used in making the original weld. Rewelding shall be done using qualified welding procedures. The surface shall be cleaned before rewelding. Repair welds shall meet the requirements of this specification.

3.1.5.4 Peening or Caulking

The use of force (peening) or foreign materials to mask, fill in, seal, or disguise any welding defects shall not be permitted.

3.2 INSTALLATION

3.2.1 Precautions

Special care shall be taken by the Contractor to insure that the protective

coating on buried pipe is not damaged during installation and that the completed system is free of rocks, sand, dirt, and foreign objects. The Contractor shall take the following steps to insure these conditions.

a. Coated pipe shall be handled only with canvas or nylon slings or padded clamps. Any coating damaged by improper handling or storage shall be repaired as specified.

b. Pipe brought to the site shall be stored on blocks or horses at least 18 inches above the ground. Padded blocks or horses shall be used for coated pipe. The method and height of storing coated pipe shall be in accordance with the coating manufacturer's instructions.

c. Visual inspection shall be made of the inside of each length of pipe to ensure that it is clear and clean prior to installation.

d. The open ends of the pipe system shall be closed at the end of each day's work or when work is not in progress and shall not be opened until the work is resumed.

e. A swab, with a leather or canvas belt disc to fit the inside diameter of pipe, shall be pulled through each length of pipe after welding in place.

f. Obstruction remaining in the pipe after completion of the system shall be removed at the expense of the Contractor.

3.2.2 Protective Coatings

3.2.2.1 Application of Tape Wrapping

Surfaces to receive tape shall be clean, dry, grease-free and dust-free. Extruded polyethylene coating and adhesive undercoat surfaces to be tape wrapped shall be primed with a compatible primer prior to application of the tape. The primer shall be as recommended by the tape manufacturer and approved by the extruded polyethylene coating manufacturer. Weld beads shall be wire brushed. Burrs and weld spatter shall be removed. Weld beads shall be covered with one wrap of tape prior to spiral wrapping. Fittings shall be wrapped spirally beginning with one complete wrap three inches back from each edge of the extruded polyethylene coating. For pipe less than four-inch size, one layer half-lapped shall be used. For pipe four-inch size and larger, two layers half-lapped shall be used, with the second layer wrapped opposite hand to the first. On irregular surfaces one layer shall be applied half-lapped and stretched to conform to the surface, followed by a second layer half-lapped and applied with the tension as it comes off the roll.

3.2.2.2 Inspection and Testing

The condition of factory field coated and wrapped piping shall be the responsibility of the Contractor and all damage to the protective covering during transit and handling shall be repaired by the Contractor at no additional cost to the Government. All field coating and wrapping shall be subject to approval by the Contracting Officer. The entire pipe shall be inspected as specified in sub-paragraph "Testing of Protective Coatings" under paragraph "Protective Coatings for Buried Carbon Steel and Stainless Steel Piping." The inspection for holidays shall be performed just prior to lowering the pipe into the ditch and every precaution shall be taken during lowering and backfilling to prevent damage to the protective

covering.

3.2.2.3 Damage Repair

Damaged areas of extruded polyethylene coating shall be repaired by tape wrapping as specified in the preceding paragraph for fittings. Residual material from the extruded polyethylene coating shall be pressed into the break or shall be trimmed off; all areas to be taped shall be primed, and the tape shall be applied half-lapped.

3.3 INTERIOR EPOXY COATING

When internally epoxy lined pipe is cut, the lining shall be ground back from the end a minimum of one inch but not more than one and one-half inches.

3.4 VERIFICATION OF DIMENSIONS

The Contractor shall become familiar with details of the work, shall verify dimensions in the field, and shall advise the Contracting Officer of any discrepancy before performing any work.

3.5 CLEANING OF PIPING

The Contractor shall keep the interior and ends of all new piping affected by the Contractor's operations thoroughly cleaned of foreign matter and water before and after being installed. Piping systems shall be kept clean during installation by means of plugs or other approved methods. When work is not in progress, open ends of piping and fittings shall be closed so that no water or other foreign substance will enter the pipes or fittings. Piping shall be inspected before placing into position. The interior of each length of pipe shall be cleaned after welding. It shall be the Contractor's responsibility for insuring that the interior of the piping is free of foreign matter when it is connected into the system.

3.6 TRENCHING AND BACKFILLING

Trenching and backfilling shall conform to Section 02316A EXCAVATION, TRENCHING, AND BACKFILLING FOR UTILITIES SYSTEMS, and the following bedding and backfill requirements. The pipe shall be laid in a bed of sand six inches deep, compacted to the elevation of the bottom of the pipe. The full length of each section of pipe without any protective covering shall be excavated to permit installation of the protective covering. Pipe that has the grade or joint disturbed after laying, shall be taken up and relaid. Pipe shall not be laid in water or when the trench or weather conditions are unsuitable for such work. After testing and application of protective covering to joints, sand backfill shall be placed and compacted around the pipe or protective coating. The remainder of the backfill shall be the same as for other types of pipe.

3.7 INSTALLATION OF UNDERGROUND PIPE

Underground fuel pipelines shall be pitched as shown on the drawings. Where not indicated they shall be pitched a minimum of 2 inches per 100 feet. Branch lines to the hydrant pits shall slope up to the pit. Three -inch pipe size valved drain connections shall be provided at all low points and three-inch pipe size valved outlet vent connections shall be provided at all high points. Vent and drain lines shall terminate in male cam-type locking end dry breaks with matching female dust covers and

installed in pits. The pipe shall have cover as shown on the drawings. Drain lines shall be installed at the slopes indicated.

3.7.1 Pipe Assembly

Pipe shall be strung parallel and adjacent to or above a trench. The pipe shall be supported on padded skids during welding and inspection of joints. Protective coating shall be inspected and repaired prior to lowering the pipe into the trench. The pipe shall be lowered using only canvas or nylon slings. The sling shall be dug from underneath the pipe after placements and shall not be pulled from underneath the pipe while in contact with it. Care shall be taken to prevent damage to the pipe, welded joints or coating and any such damage shall be repaired as directed by the Contracting Officer. Pressure testing of the pipe shall be done after it has been placed in final position in the trench.

3.7.2 Warning Tapes in Earth Trenches

For the purpose of early warning and identification of buried pipes outside of building walls during future trenching or other excavation, continuous identification tapes shall be provided in the trench. Tape shall be nonmagnetic plastic tape or aluminum foil plastic backed tape manufactured for the purpose of early warning and identification of utilities buried below the tape. Tape shall be at least three inches in width. Color of tape shall be as standard with the manufacturer with respect to the type of utility buried below the tape. Tape shall have lettering at least one inch high with not less than the following identification on the tape: BURIED JET FUEL PIPING BELOW. Tape shall be installed in accordance with the printed recommendations of the tape manufacturer, as modified herein. Tapes shall be buried at a depth of six inches from the top of the subgrade.

3.7.3 Clearances

Install pipe to be clear of contact with other pipes, pipe sleeves, casings, reinforcing steel, conduits, cables, or other metallic structures. Where pipes cross other pipes or structures with a separation of less than six inches, install an insulating separator. Protect the pipe from contact with a 12-inch square by 1 inch thick bituminous-impregnated canefiber board.

3.7.4 Protective Coating

When the protective coating on pipe is damaged, the Contracting Officer shall be notified and shall inspect the pipe before the coating is patched. If the damage to the pipe is deeper than 0.050-inch, the damage shall be repaired by welding in accordance with paragraph "WELDING". If the pipe is dented, out of round or damaged to the point that welding will not make it good as new, the length of pipe shall be rejected.

3.8 PIPING LAYOUT REQUIREMENTS

3.8.1 Pipe Fabrication

Fabricate piping to measurements established on the project site and position into place without springing or forcing. Make provisions for absorbing expansion and contraction without undue stress in any part of the system.

3.8.2 Interferences and Measurements

Provide offsets, fittings, and accessories required to eliminate interferences and to match actual equipment connection locations and arrangements. Verify measurements before commencing work. Submit discrepancies for clarification before proceeding with the installations to the Contracting Officer.

3.8.3 Space and Access

Keep piping, control tubing, which is not detailed close to structures and columns so as to take up a minimum amount of space. Ensure that access is provided for maintenance of equipment, valves and gauges.

3.8.4 Location

Do not place unions in locations that will be inaccessible after the completion of the work. Place unions on each side of equipment.

3.8.5 Piping and Equipment

Provide anchors where required to absorb or transmit thrust or eliminate vibration or pulsation. Provide hangers and supports near each change of direction. Select support components which do not restrict the movement of the pipe due to thermal expansion. Space hangers uniformly and arrange symmetrically.

3.8.6 Structural Support

Provide supplementary or intermediate steel or other structural members as required for transmission of loads to members forming part of the supporting structure.

3.8.7 Grade

Where profiles of piping lines are shown on the drawings, grade the line uniformly between changes in slope or direction. Maintain gradient to within $\pm$ 1/4-inch over the entire length of pipe. When backfilling has been completed to the top of the pipe, the pipe shall be surveyed at each joint, logged by station number, and submitted to the Contracting Officer and approved before backfilling can continue.

3.8.8 Size Changes

Make changes in pipe size with reducing fittings. Do not use bushings. In lieu of welding reducing outlet tees for piping 2 inches and larger, welding branches suitable for 100 percent radiographic inspection may be used. Do not use weldolets unless specifically called out (labeled) on the drawings.

3.8.9 Direction Changes

Make changes in the horizontal direction of pipes with long radius fittings. Provide special fittings when required. Do not make miter welds. Make odd-angle offsets with pipe bends or elbows cut to the proper angle.

## 3.9 TESTING

Piping shall be tested by pneumatic and hydrostatic pressure. Testing shall comply with applicable requirements of ASME B31.3, NFPA 30 and the requirements specified herein. Hydrostatic testing shall be performed using fuel as the liquid. Water shall not be introduced into the system for testing. Pressure and hydrostatic testing shall be performed only after welding inspection has been completed.

### 3.9.1 General

Piping to be installed underground shall not receive field applied protective covering at the joints or be covered by backfill until the piping has passed the pneumatic test described herein. To facilitate the tests, the Contractor shall isolate various sections of the piping system and test each one separately. Where such sections terminate at flanged valve points, the line shall be closed by means of blind flanges in lieu of relying on the valve. The Contractor shall furnish tapped flanges that can be attached to the end of the section of line being tested, and that will permit a direct connection between the piping and the air compressor and/or pressurizing pump. No taps in the permanent line will be permitted. The Contractor shall furnish all necessary equipment for testing; all gauges shall be subject to testing and approval of the Contracting Officer. The air used for pneumatic testing shall have a residual humidity of not over 20 percent. The Contractor shall provide dehumidifying equipment on the suction or discharge side of the air compressor used to provide air for testing. Pressurizing pump shall not exceed 10 cfm.

#### 3.9.1.1 Pneumatic Test Procedure

Special safety measures, including the wearing of face mask, shall be taken during testing under pressure. Only authorized personnel shall be permitted in the area during testing. The pneumatic test pressure shall be applied in increments. A preliminary 25 psig test shall be applied. Examine joints with soap solution. Leaks revealed by this test shall be repaired. The full test pressure shall then be applied. Unless otherwise directed by the Contracting Officer, all piping shall be tested at a pressure of 100 psig for not less than 2 hours, during which time there shall be no drop in pressure, only pressure rises with temperature. The pressure source shall be disconnected during the final test period. Any leaks revealed by the test shall be repaired and the test repeated.

#### 3.9.1.2 Hydrostatic Test

Upon completion of pneumatic testing and after backfilling, hydrostatically test each piping system with fuel at 275 psig in accordance with ASME B31.3 and API RP 1110, with no leakage or reduction in gauge pressure for four hours. The Contractor shall furnish electricity, instruments, connecting devices, and personnel for test. Fuel shall be furnished by the Government. Defects in work provided by the Contractor shall be corrected by him at his own expense, and the test repeated until the work is proven to be in compliance with the Contract requirements.

### 3.9.2 Performance Testing

The completed fuel system shall be cleaned and performance tested as specified in Section 15899 SYSTEM START UP, FUELING SYSTEM. All control valves, both manual and automatic, shall be checked for leaks (any area wetted with fuel) and proper operation and adjusted, repaired or replaced

to correct any defects.

## 3.10 Pipeline Pigging Procedure and Equipment

### 3.10.1 Geometry Tool Reports

After the system is installed and prior to performance testing, a field/preliminary report shall be issued and a debrief given to Government personnel on-site on the condition of the fuel hydrant loop. This shall be comprised of raw data in the form of a PC download or equivalent which shows a continuous scan of each data unit output. Results of a preliminary interpretation of the data shall be reported. These shall include as a minimum all critical anomalies. A final report shall include a description of the principle of operation, explanation of raw data, presentation of raw data, data to be clearly marked with distance traveled scale with classified anomaly location and all identifiable pipeline features, and all anomalies to be classified with locations in summary tabular form.

### 3.10.2 Workmanship

The Contractor shall verify pipe bend radii at pipe locations between temporary pig launchers and receivers. All underground ninety-degree bends are to be a minimum of 3D (three diameter) radius. All underground ninety-degree bends less than 3D must be replaced by contractor.

### 3.10.3 Pipeline Internal Inspection Operations

#### 3.10.3.1 General

The following pigs will be propelled through the pipeline with product in order to inspect the pipeline: brush, gage, and geometry. Tracking devices shall be used on all pigs. The pipe wall shall be continuously monitored on a real-time basis during the geometry pig run. Anomalies such as patches, couplings, or flanges shall also be identified. A permanent data set of internal inspection survey findings shall be generated.

#### 3.10.3.2 Preparatory Work

The Government will bring to the attention of the Contractor all statutes, rules and regulations relevant to the performance of the work on the site (on Government property) and shall also provide the Contractor with a copy of its own site regulations (if any). The Contractor shall provide the pigging vendors with all-available pipeline records and drawings.

#### 3.10.3.3 Pig Load And Launch

The pig shall be loaded into the pig launcher by the Contractor. The method of loading and lodging the front pig cup into the launcher shall not involve the use of uncontrolled mechanical force applied to the rear of the pig.

#### 3.10.3.4 Pipeline Operation During Pigging

All pig runs shall be made with the line packed with product. The system pumps will be used to propel the pig. The new pig traps will be used for pig launch and retrieval.

3.10.3.5 Brush and Gauging Survey

The Contractor shall run a brush pig at least one time. The brush pig shall be designed and provided by the geometry pig vendor. Additional runs may be required based upon the amount of debris found in the pipeline.The on-site geometry pig vendor's personnel shall determine if additional runs are required. Immediately following the brush pig run and immediately prior to the geometry survey, the Contractor will run, as a minimum, a single batching pig fitted with a gauge plate equal to 90 percent of the pipeline normal inside diameter. The plate is to be a segmented aluminum disk of 1/8 inch thickness. The gauging pig shall also include a tracker and tracking equipment. The Contractor is to track the pig assembly above ground during the operation.

3.10.3.6 Geometry Survey

After a satisfactory gauging pig run, the pipeline geometric defects are to be determined by a geometry tool. The geometry tool shall provide accuracy geometric anomaly detection and bend radius measuring capability. The data obtained shall be presented in a PC software format to allow user friendly analysis and presentation.

The geometry tool assembly shall be capable of:

a. Operating in hydrocarbon liquid enviroment, specifically jet fuel, at a pressure of up to ANSI 300 rating.

b. Traversing the pipeline with nominal wall thickness and possible bore restrictions down to 90 percent of nominal pipe inside diameter.

c. Traversing the pipeline length at a speed of between 3 and 5 ft/sec when propelled by pumped jet fuel. Pressure differential across pig not to exceed 50 psi.

d. Traversing through smooth pipe bends as small as 1 1/2D (1 1/2 pipe diameters) radius and single miter bends of up to 10 degrees change of direction.

e. Include a tracker and tracking equipment. The Contractor is to track the pig assembly above ground during the operation. The battery life of the tracker shall not be less than 72 hours.

f. Manual loading into the new horizontal pig trap.

The geometry tool assembly instrumentation performance shall be capable of:

a. Battery life to be minimum 18 hours at operating conditions.

b. Principle of operation to be electronically stored geometry system.

c. Geometry sensing to span full circumference and length of pipe, with associated distance measuring method.

d. Geometry system shall be capable of:

(1) positive location and identification of each geometric anomaly.

(2) positive location and identification of each bend.

(3) positive location and identification of distance marker reference points of either magnetic or electronic type placed on or above the pipe by the Contractor.

e. Classification of geometric anomalies to be as minimum:

(1) discrimination between ovality and intrusion anomalies.

(2) mechanical damage such as mill defects, dents, internal gouges, and buckles.

(3) pipeline weld defects (such as excess weld penetration).

(4) geometric thickness anomalies. As a minimum, these shall be reported in the following categories within the listed accuracy.

-magnitude of anomaly (+/- 1 inch)

-span of anomaly (+/- 1 inch)

-ovality (+/- 0.1 inch)

-span of ovality (+/- 1 inch)

-anomaly station (+/- 1:2,000)

-- End of Section --

SECTION TABLE OF CONTENTS

DIVISION 15 - MECHANICAL

SECTION 15080A

THERMAL INSULATION FOR MECHANICAL SYSTEMS

**07/02**

PART 1 GENERAL

1.1 REFERENCES
1.2 SYSTEM DESCRIPTION
1.3 GENERAL QUALITY CONTROL
1.3.1 Standard Products
1.3.2 Installer's Qualifications
1.3.3 Surface Burning Characteristics
1.3.4 Identification of Materials
1.4 SUBMITTALS
1.5 STORAGE

PART 2 PRODUCTS

2.1 THERMAL INSULATION MATERIALS
2.1.1 Adhesives
2.1.1.1 Mineral Fiber Insulation Cement
2.1.1.2 Lagging Adhesive
2.1.2 Contact Adhesive
2.1.3 Caulking
2.1.4 Corner Angles
2.1.5 Finishing Cement
2.1.6 Fibrous Glass Cloth and Glass Tape
2.1.7 Staples
2.1.8 Jackets
2.1.8.1 White Vapor Retarder All Service Jacket (ASJ)
2.1.8.2 Aluminum Jackets
2.1.8.3 Polyvinyl Chloride (PVC) Jackets
2.1.9 Vapor Retarder Required
2.1.9.1 Vapor Retarder Mastic Coatings
2.1.9.2 Laminated Film Vapor Retarder
2.1.9.3 Polyvinylidene Chloride (PVDC) Film Vapor Retarder
2.1.9.4 Polyvinylidene Chloride Vapor Retarder Adhesive Tape
2.1.10 Wire
2.1.11 Sealants
2.2 PIPE INSULATION MATERIALS
2.2.1 Aboveground Cold Pipeline
2.2.2 Aboveground Hot Pipeline
2.3 DUCT INSULATION MATERIALS
2.3.1 Rigid Mineral Fiber
2.3.2 Flexible Mineral Fiber
2.3.3 Cellular Glass
2.3.4 Phenolic Foam
2.3.5 Flexible Elastomeric Cellular
2.3.6 Polyisocyanurate

PART 3 EXECUTION

3.1 APPLICATION - GENERAL
3.1.1 Installation
3.1.2 Fire-stopping
3.1.3 Painting and Finishing
3.1.4 Installation of Flexible Elastomeric Cellular Insulation
3.1.5 Welding
3.1.6 Pipes/Ducts/ which Require Insulation
3.2 PIPE INSULATION INSTALLATION
3.2.1 Pipe Insulation
3.2.1.1 General
3.2.1.2 Pipes Passing Through Walls, Roofs, and Floors
3.2.1.3 Pipes Passing Through Hangers
3.2.1.4 Flexible Elastomeric Cellular Pipe Insulation
3.2.1.5 Pipes in high abuse areas.
3.2.2 Aboveground Cold Pipelines
3.2.2.1 Insulation Thickness
3.2.2.2 Jacket for Mineral Fiber, Cellular Glass, Phenolic Foam, and Polyisocyanurate Foam Insulated Pipe
3.2.2.3 Insulation for Straight Runs (Mineral Fiber, Cellular Glass, Phenolic Foam and Polyisocyanurate Foam)
3.2.2.4 Insulation for Fittings and Accessories
3.2.2.5 Optional PVC Fitting Covers
3.2.3 Aboveground Hot Pipelines
3.2.3.1 Insulation Thickness
3.2.3.2 Jacket for Insulated Hot Pipe, Except Pipe Insulated with Flexible Elastomeric Cellular
3.2.3.3 Insulation for Straight Runs
3.2.3.4 Insulation for Fittings and Accessories
3.2.4 Piping Exposed to Weather
3.2.4.1 Aluminum Jacket
3.2.4.2 Insulation for Fittings
3.2.4.3 PVC Jacket
3.3 DUCT INSULATION INSTALLATION
3.3.1 Duct Insulation Thickness
3.3.2 Insulation and Vapor Retarder for Cold Air Duct
3.3.2.1 Installation on Concealed Duct
3.3.2.2 Installation on Exposed Duct Work
3.3.3 Insulation for Warm Air Duct
3.3.3.1 Installation on Concealed Duct
3.3.3.2 Installation on Exposed Duct
3.3.4 Ducts Handling Air for Dual Purpose
3.3.5 Duct Test Holes

-- End of Section Table of Contents --

SECTION 15080A

THERMAL INSULATION FOR MECHANICAL SYSTEMS
**07/02**

PART 1 GENERAL

1.1 REFERENCES

The publications listed below form a part of this specification to the extent referenced. The publications are referred to in the text by basic designation only. At the discretion of the Government, the manufacturer of any material supplied will be required to furnish test reports pertaining to any of the tests necessary to assure compliance with the standard or standards referenced in this specification.

ASTM INTERNATIONAL (ASTM)

| | |
|---|---|
| ASTM A 580/A 580M | (1998) Stainless Steel Wire |
| ASTM B 209 | (2001) Aluminum and Aluminum-Alloy Sheet and Plate |
| ASTM C 1126 | (2000) Faced or Unfaced Rigid Cellular Phenolic Thermal Insulation |
| ASTM C 1136 | (1995) Flexible, Low Permeance Vapor Retarders for Thermal Insulation |
| ASTM C 1290 | (2000e1) Flexible Fibrous Glass Blanket Insulation Used to Externally Insulate HVAC Ducts |
| ASTM C 195 | (1995) Mineral Fiber Thermal Insulating Cement |
| ASTM C 449/C 449M | (2000) Mineral Fiber Hydraulic-Setting Thermal Insulating and Finishing Cement |
| ASTM C 533 | (1995; R 2001) Calcium Silicate Block and Pipe Thermal Insulation |
| ASTM C 534 | (2001a) Preformed Flexible Elastomeric Cellular Thermal Insulation in Sheet and Tubular Form |
| ASTM C 547 | (2000) Mineral Fiber Pipe Insulation |
| ASTM C 552 | (2000) Cellular Glass Thermal Insulation |
| ASTM C 553 | (2000) Mineral Fiber Blanket Thermal Insulation for Commercial and Industrial Applications |
| ASTM C 591 | (2001) Unfaced Preformed Rigid Cellular Polyisocyanurate Thermal Insulation |

| | |
|---|---|
| ASTM C 610 | (1999) Molded Expanded Perlite Block and Pipe Thermal Insulation |
| ASTM C 612 | (2000a) Mineral Fiber Block and Board Thermal Insulation |
| ASTM C 647 | (1995; R 2000) Properties and Tests of Mastics and Coating Finishes for Thermal Insulation |
| ASTM C 665 | (2001e1) Mineral-Fiber Blanket Thermal Insulation for Light Frame Construction and Manufactured Housing |
| ASTM C 795 | (1992; R 1998el) Thermal Insulation for Use in Contact with Austenitic Stainless Steel |
| ASTM C 920 | (2002) Elastomeric Joint Sealants |
| ASTM C 921 | (1989; R 1996) Determining the Properties of Jacketing Materials for Thermal Insulation |
| ASTM D 882 | (1997) Tensile Properties of Thin Plastic Sheeting |
| ASTM E 84 | (2001) Surface Burning Characteristics of Building Materials |
| ASTM E 96 | (2000e1) Water Vapor Transmission of Materials |

MANUFACTURERS STANDARDIZATION SOCIETY OF THE VALVE AND FITTINGS INDUSTRY (MSS)

| | |
|---|---|
| MSS SP-69 | (2002) Pipe Hangers and Supports - Selection and Application |

MIDWEST INSULATION CONTRACTORS ASSOCIATION (MICA)

| | |
|---|---|
| MICA Insulation Stds | (1999) National Commercial & Industrial Insulation Standards |

## 1.2 SYSTEM DESCRIPTION

Field-applied insulation and accessories on mechanical systems shall be as specified herein; factory-applied insulation is specified under the piping, duct or equipment to be insulated. Field applied insulation materials required for use on Government-furnished items as listed in the SPECIAL CONTRACT REQUIREMENTS shall be furnished and installed by the Contractor.

## 1.3 GENERAL QUALITY CONTROL

### 1.3.1 Standard Products

Materials shall be the standard products of manufacturers regularly engaged in the manufacture of such products and shall essentially duplicate items

that have been in satisfactory use for at least 2 years prior to bid opening.

1.3.2 Installer's Qualifications

Qualified installers shall have successfully completed three or more similar type jobs within the last 5 years.

1.3.3 Surface Burning Characteristics

Unless otherwise specified, insulation not covered with a jacket shall have a flame spread index no higher than 75 and a smoke developed index no higher than 150. Insulation systems which are located in air plenums, in ceiling spaces, and in attic spaces shall have a flame spread index no higher than 25 and a smoke developed index no higher than 50. Insulation materials located exterior to the building perimeter are not required to be fire-rated. Flame spread, and smoke developed indexes, shall be determined by ASTM E 84. Insulation shall be tested in the same density and installed thickness as the material to be used in the actual construction. Material supplied by a manufacturer with a jacket shall be tested as a composite material. Jackets, facings, and adhesives shall have a flame spread index no higher than 25 and a smoke developed index no higher than 50 when tested in accordance with ASTM E 84.

1.3.4 Identification of Materials

Packages or standard containers of insulation, jacket material, cements, adhesives, and coatings delivered for use, and samples required for approval shall have manufacturer's stamp or label attached giving the name of the manufacturer and brand, and a description of the material.

1.4 SUBMITTALS

Government approval is required for submittals with a "G" designation; submittals not having a "G" designation are for information only. When used, a designation following the "G" designation identifies the office that will review the submittal for the Government. The following shall be submitted in accordance with Section 01330 SUBMITTAL PROCEDURES:

SD-02 Shop Drawings

Mica Plates; G-AO.

After approval of materials and prior to applying insulation, a booklet shall be prepared and submitted for approval. The booklet shall contain marked-up MICA Insulation Stds plates (or detail drawings showing the insulation material and insulating system) for each pipe or duct that must be insulated per this specification. The MICA plates shall be marked up showing the materials to be installed in accordance with the requirements of this specification for the specific insulation application. The Contractor shall submit all MICA Plates required to show the entire insulating system, including Plates required to show insulation penetrations, vessel bottom and top heads, legs, and skirt insulation as applicable. If the Contractor elects to submit detailed drawings instead of marked-up MICA Plates, the detail drawings shall show cut-away, section views, and details indicating each component of the insulation system and showing provisions for insulating jacketing, and sealing portions of the

equipment. For each type of insulation installation on the drawings, provide a label that identifies each component in the installation (i.e., the duct, insulation, adhesive, vapor retarder, jacketing, tape, mechanical fasteners, etc.) Indicate insulation by type and manufacturer. Three copies of the booklet shall be submitted at the jobsite to the Contracting Officer. One copy of the approved booklet shall remain with the insulation Contractor's display sample and two copies shall be provided for Government use.

SD-03 Product Data

Thermal Insulation Materials; G-AO.

A complete list of materials, including manufacturer's descriptive technical literature, performance data, catalog cuts, and installation instructions. The product number, k-value, thickness and furnished accessories for each mechanical system requiring insulation shall be included. Materials furnished under this section of the specification shall be submitted at one time.

SD-04 Samples

Thermal Insulation Materials; G-AO.

After approval of materials actual sections of installed systems, properly insulated in accordance with the specification requirements, shall be displayed. Such actual sections must remain accessible to inspection throughout the job and will be reviewed from time to time for controlling the quality of the work throughout the construction site. Each material used shall be identified, by indicating on an attached sheet the specification requirement for the material and the material by each manufacturer intended to meet the requirement. The Contracting Officer will inspect display sample sections at the jobsite. Approved display sample sections shall remain on display at the jobsite during the construction period. Upon completion of construction, the display sample sections will be closed and sealed.

Pipe Insulation Display Sections: Display sample sections shall include as a minimum an elbow or tee, a valve, dielectric waterways and flanges, a hanger with protection shield and insulation insert, or dowel as required, at support point, method of fastening and sealing insulation at longitudinal lap, circumferential lap, butt joints at fittings and on pipe runs, and terminating points for each type of pipe insulation used on the job, and for hot pipelines and cold pipelines, both interior and exterior, even when the same type of insulation is used for these services.

Duct Insulation Display Sections: Display sample sections for rigid and flexible duct insulation used on the job. A temporary covering shall be used to enclose and protect display sections for duct insulation exposed to weather.

1.5 STORAGE

Materials shall be delivered in the manufacturer's unopened containers. Materials delivered and placed in storage shall be provided with protection from weather, humidity, dirt, dust and other contaminants. The Contracting Officer may reject insulation material and supplies that become dirty, dusty, wet, or contaminated by some other means.

PART 2 PRODUCTS

2.1 THERMAL INSULATION MATERIALS

Materials shall be compatible and shall not contribute to corrosion, soften, or otherwise attack surfaces to which applied in either the wet or dry state. Materials to be used on stainless steel surfaces shall meet ASTM C 795 requirements. Materials shall be asbestos free and conform to the following:

2.1.1 Adhesives

2.1.1.1 Mineral Fiber Insulation Cement

Cement shall be in accordance with ASTM C 195.

2.1.1.2 Lagging Adhesive

Lagging is the material used for thermal insulation, especially around a cylindrical object. This may include the insulation as well as the cloth/material covering the insulation. Lagging adhesives shall be nonflammable and fire-resistant and shall have a flame spread rating no higher than 25 and a smoke developed rating no higher than 50 when tested in accordance with ASTM E 84. Adhesive shall be pigmented white and be suitable for bonding fibrous glass cloth to faced and unfaced fibrous glass insulation board; for bonding cotton brattice cloth to faced and unfaced fibrous glass insulation board; for sealing edges of and bonding fibrous glass tape to joints of fibrous glass board; for bonding lagging cloth to thermal insulation; or for attaching fibrous glass insulation to metal surfaces. Lagging adhesives shall be applied in strict accordance with the manufacturer's recommendations.

2.1.2 Contact Adhesive

Adhesives may be dispersed in a volatile organic solvent. Adhesives may be any of, but not limited to, the neoprane based, rubber based, or elastomeric type that have a flame spread index no higher than 25 and a smoke developed index no higher than 50 when tested in the dry state in accordance with ASTM E 84. The adhesive shall not adversely affect, initially or in service, the insulation to which it is applied, nor shall it cause any corrosive effect on metal to which it is applied. Any solvent dispersing medium or volatile component of the adhesive shall have no objectionable odor and shall not contain any benzene or carbon tetrachloride. The dried adhesive shall not emit nauseous, irritating, or toxic volatile matters or aerosols when the adhesive is heated to any temperature up to 212 degrees F. The dried adhesive shall be nonflammable and fire resistant. Natural cross-ventilation, local (mechanical) pickup, and/or general area (mechanical) ventilation shall be used to prevent an accumulation of solvent vapors, keeping in mind the ventilation pattern must remove any heavier-than-air solvent vapors from lower levels of the workspaces. Gloves and spectacle-type safety glasses are recommended in

accordance with safe installation practices.

2.1.3 Caulking

ASTM C 920, Type S, Grade NS, Class 25, Use A.

2.1.4 Corner Angles

Nominal 0.016 inch aluminum 1 x 1 inch with factory applied kraft backing. Aluminum shall be ASTM B 209, Alloy 3003, 3105, or 5005.

2.1.5 Finishing Cement

ASTM C 449/C 449M: Mineral fiber hydraulic-setting thermal insulating and finishing cement. All cements that may come in contact with Austenitic stainless steel must include testing per ASTM C 795.

2.1.6 Fibrous Glass Cloth and Glass Tape

Fibrous glass cloth and glass tape shall have flame spread and smoke developed ratings of no greater than 25/50 when measured in accordance with ASTM E 84. Tape shall be 4 inch wide rolls.

2.1.7 Staples

Outward clinching type monel . Monel is a nickel rich alloy that has high strength, high ductility, and excellent resistance to corrosion.

2.1.8 Jackets

ASTM C 921, Type I, maximum moisture vapor transmission 0.02 perms, (measured before factory application or installation), minimum puncture resistance 50 Beach units on all surfaces except concealed ductwork, where a minimum puncture resistance of 25 Beach units is acceptable. Minimum tensile strength, 35 pounds/inch width. ASTM C 921, Type II, minimum puncture resistance 25 Beach units, tensile strength minimum 20 pounds/inch width. Jackets used on insulation exposed in finished areas shall have white finish suitable for painting without sizing. Based on the application, insulation materials that require factory applied jackets are mineral fiber, cellular glass, and phenolic foam. All non-metallic jackets shall have a maximum flame spread index of 25 and a maximum smoke developed index of 50 when tested in accordance with ASTM E 84.

2.1.8.1 White Vapor Retarder All Service Jacket (ASJ)

For use on hot/cold pipes or ducts vapor retarder jackets used on insulation exposed in finished areas shall have white finish suitable for painting without sizing.

2.1.8.2 Aluminum Jackets

Aluminum jackets shall be corrugated, embossed or smooth sheet, 0.016 inch nominal thickness; ASTM B 209, Temper H14, Temper H16, Alloy 3003, 5005, or 3105 with factory applied moisture retarder. Corrugated aluminum jacket shall not be used outdoors. Aluminum jacket securing bands shall be Type 304 stainless steel, 0.015 inch thick, 1/2 inch wide for pipe under 12 inch diameter and 3/4 inch wide for pipe over 12 inch and larger diameter. Aluminum jacket circumferential seam bands shall be 2 x 0.016 inch aluminum matching jacket material. Bands for insulation below ground shall be 3/4 x

0.020 inch) thick stainless steel, or fiberglass reinforced tape. The jacket may, at the option of the Contractor, be provided with a factory fabricated Pittsburg or "Z" type longitudinal joint. When the "Z" joint is used, the bands at the circumferential joints shall be designed by the manufacturer to seal the joints and hold the jacket in place.

2.1.8.3 Polyvinyl Chloride (PVC) Jackets

Polyvinyl chloride (PVC) jacket and fitting covers shall have high impact strength, UV resistant rating or treatment and moderate chemical resistance with minimum thickness 0.030 inch.

2.1.9 Vapor Retarder Required

2.1.9.1 Vapor Retarder Mastic Coatings

The vapor retarder coating shall be fire and water resistant and appropriately selected for either outdoor or indoor service. Color shall be white. The water vapor permeance of the compound shall be determined according to procedure B of ASTM E 96 utilizing apparatus described in ASTM E 96. The coating shall be a nonflammable, fire resistant type. All other application and service properties shall be in accordance with ASTM C 647.

2.1.9.2 Laminated Film Vapor Retarder

ASTM C 1136, Type I, maximum moisture vapor transmission 0.02 perms, minimum puncture resistance 50 Beach units on all surfaces.

2.1.9.3 Polyvinylidene Chloride (PVDC) Film Vapor Retarder

The PVDC film vapor retarder shall have a maximum moisture vapor transmission of 0.02 perms, minimum puncture resistance of 150 Beach units, a minimum tensile strength in any direction of 30 lb/inch when tested per ASTM D 882, and a maximum flame spread/smoke developed index of 25/50 per ASTM E 84.

2.1.9.4 Polyvinylidene Chloride Vapor Retarder Adhesive Tape

Requirements must meet the same as specified for PVDC Film Vapor Retarder in paragraph 2.1.9.2 above.

2.1.10 Wire

Soft annealed ASTM A 580/A 580M Type 302, 304 or 316 stainless steel, 16 or 18 gauge.

2.1.11 Sealants

Sealants shall be chosen from the butyl polymer type, the styrene-butadiene rubber type, or the butyl type of sealants. Sealants shall have a maximum moisture vapor transmission of 0.02 perms, and a maximum flame spread/smoke developed index of 25/50 per ASTM E 84.

2.2 PIPE INSULATION MATERIALS

The Contractor shall comply with EPA requirements in accordance with Section 01670 RECYCLED / RECOVERED MATERIALS. Pipe insulation materials shall be limited to those listed herein and shall meet the following requirements:

2.2.1 Aboveground Cold Pipeline

Insulation for minus 30 degrees to plus 60 degrees F for outdoor, indoor, exposed or concealed applications, shall be as follows:

a. Cellular Glass: ASTM C 552, Type II, and Type III. Supply the insulation with manufacturer's recommended factory-applied jacket.

b. Flexible Elastomeric Cellular Insulation: ASTM C 534, Type I or II. Type II shall have vapor retarder skin on both sides of the insulation.

c. Phenolic Insulation: ASTM C 1126, Type III. Phenolic insulations shall comply with ASTM C 795 and with the ASTM C 665 paragraph Corrosiveness. Supply the insulation with manufacturer's recommended factory-applied jacket.

d. Mineral Fiber: ASTM C 547.

e. Polyisocyanurate Insulation: ASTM C 591, type I. Supply the insulation with manufacturer's recommended factory-applied vapor retarder.

2.2.2 Aboveground Hot Pipeline

Insulation for above 60 degrees F, for outdoor, indoor, exposed or concealed applications shall meet the following requirements. Supply the insulation with manufacturer's recommended factory-applied jacket.

a. Mineral Fiber: ASTM C 547, Types I, II or III, supply the insulation with manufacturer's recommended factory-applied jacket.

b. Calcium Silicate: ASTM C 533, Type I indoor only, or outdoors above 250 degrees F pipe temperature. Supply insulation with the manufacturer's recommended factory-applied jacket.

c. Cellular Glass: ASTM C 552, Type II and Type III. Supply the insulation with manufacturer's recommended factory-applied jacket.

d. Flexible Elastomeric Cellular Insulation: ASTM C 534, Type I or II to 200 degrees F service.

e. Phenolic Insulation: ASTM C 1126 Type III to 250 F service shall comply with ASTM C 795. Supply the insulation with manufacturer's recommended factory-applied jacket.

f. Perlite Insulation: ASTM C 610

g. Polyisocyanurate Insulation: ASTM C 591, Type 1, to 300 degrees F service. Supply the insulation with manufacturer's recommended factory applied jacket.

2.3 DUCT INSULATION MATERIALS

Duct insulation materials shall be limited to those listed herein and shall meet the following requirements:

2.3.1 Rigid Mineral Fiber

ASTM C 612: Type IA, IB, II, III, & IV.

2.3.2 Flexible Mineral Fiber

ASTM C 553: Type I,or Type II up to 250 F. ASTM C 1290 Type III.

2.3.3 Cellular Glass

ASTM C 552, Type I.

2.3.4 Phenolic Foam

ASTM C 1126: Type II shall comply with ASTM C 795.

2.3.5 Flexible Elastomeric Cellular

ASTM C 534: Type II.

2.3.6 Polyisocyanurate

ASTM C 591: Type 1. Supply the insulation with manufacturer's recommended factory-applied jacket.

PART 3 EXECUTION

3.1 APPLICATION - GENERAL

Insulation shall only be applied to unheated and uncooled piping and equipment. Flexible elastomeric cellular insulation shall not be compressed at joists, studs, columns, ducts, hangers, etc. The insulation shall not pull apart after a one hour period; any insulation found to pull apart after one hour, shall be replaced.

3.1.1 Installation

Except as otherwise specified, material shall be installed in accordance with the manufacturer's written instructions. Insulation materials shall not be applied until tests specified in other sections of this specification are completed. Material such as rust, scale, dirt and moisture shall be removed from surfaces to receive insulation. Insulation shall be kept clean and dry. Insulation shall not be removed from its shipping containers until the day it is ready to use and shall be returned to like containers or equally protected from dirt and moisture at the end of each workday. Insulation that becomes dirty shall be thoroughly cleaned prior to use. If insulation becomes wet or if cleaning does not restore the surfaces to like new condition, the insulation will be rejected, and shall be immediately removed from the jobsite. Joints shall be staggered on multi layer insulation. Mineral fiber thermal insulating cement shall be mixed with demineralized water when used on stainless steel surfaces. Insulation, jacketing and accessories shall be installed in accordance with MICA Insulation Stds plates except where modified herein or on the drawings.

3.1.2 Fire-stopping

Where pipes and ducts pass through fire walls, fire partitions, above grade floors, and fire rated chase walls, the penetration shall be sealed with fire stopping materials as specified in Section 07840 FIRESTOPPING.

3.1.3 Painting and Finishing

Painting shall be as specified in Section 09900 PAINTS AND COATINGS.

3.1.4 Installation of Flexible Elastomeric Cellular Insulation

Flexible elastomeric cellular insulation shall be installed with seams and joints sealed with rubberized contact adhesive. Insulation with pre-applied adhesive is not permitted. Flexible elastomeric cellular insulation shall not be used on surfaces greater than 200 degrees F. Seams shall be staggered when applying multiple layers of insulation. Insulation exposed to weather and not shown to have jacketing shall be protected with two coats of UV resistant finish as recommended by the manufacturer after the adhesive is dry. A brush coating of adhesive shall be applied to both butt ends to be joined and to both slit surfaces to be sealed. The adhesive shall be allowed to set until dry to touch but tacky under slight pressure before joining the surfaces. Insulation seals at seams and joints shall not be capable of being pulled apart one hour after application. Insulation that can be pulled apart one hour after installation shall be replaced.

3.1.5 Welding

No welding shall be done on piping, duct or equipment without written approval of the Contracting Officer. The capacitor discharge welding process may be used for securing metal fasteners to duct.

3.1.6 Pipes/Ducts/ which Require Insulation

Insulation is required on all pipes or ducts except for omitted items, as specified.

3.2 PIPE INSULATION INSTALLATION

3.2.1 Pipe Insulation

3.2.1.1 General

Pipe insulation shall be installed on aboveground hot and cold pipeline systems as specified below to form a continuous thermal retarder, including straight runs, fittings and appurtenances unless specified otherwise. Installation shall be with full length units of insulation and using a single cut piece to complete a run. Cut pieces or scraps abutting each other shall not be used. Pipe insulation shall be omitted on the following:

a. Pipe used solely for fire protection.

b. Chromium plated pipe to plumbing fixtures. However, fixtures for use by the physically handicapped shall have the hot water supply and drain, including the trap, insulated where exposed.

c. Sanitary drain lines.

d. Air chambers.

3.2.1.2 Pipes Passing Through Walls, Roofs, and Floors

a. Pipe insulation shall be continuous through the sleeve.

b. An aluminum jacket with factory applied moisture retarder shall be provided over the insulation wherever penetrations require sealing.

c. Where pipes penetrate interior walls, the aluminum jacket shall extend 2 inches beyond either side of the wall and shall be secured on each end with a band.

Where penetrating exterior walls, the aluminum jacket required for pipe exposed to weather shall continue through the sleeve to a point 2 inches beyond the interior surface of the wall.

e. Where penetrating roofs, pipe shall be insulated as required for interior service to a point flush with the top of the flashing and sealed with vapor retarder coating. The insulation for exterior application shall butt tightly to the top of flashing and interior insulation. The exterior aluminum jacket shall extend 2 inches down beyond the end of the insulation to form a counter flashing. The flashing and counter flashing shall be sealed underneath with caulking.

f. For hot water pipes supplying lavatories or other similar heated service that requires insulation, the insulation shall be terminated on the backside of the finished wall. The insulation termination shall be protected with two coats of vapor barrier coating with a minimum total thickness of 1/16 inch applied with glass tape embedded between coats (if applicable). The coating shall extend out onto the insulation 2 inches and shall seal the end of the insulation. Glass tape seams shall overlap 1 inch. The annular space between the pipe and wall penetration shall be caulked with approved fire stop material. The pipe and wall penetration shall be covered with a properly sized (well fitting) escutcheon plate. The escutcheon plate shall overlap the wall penetration at least 3/8 inches.

g. For domestic cold water pipes supplying lavatories or other similar cooling service that requires insulation, the insulation shall be terminated on the finished side of the wall (i.e., insulation must cover the pipe throughout the wall penetration). The insulation shall be protected with two coats of vapor barrier coating with a minimum total thickness of 1/16 inch. The coating shall extend out onto the insulation 2 inches and shall seal the end of the insulation. The annular space between the outer surface of the pipe insulation and the wall penetration shall be caulked with an approved fire stop material having vapor retarder properties. The pipe and wall penetration shall be covered with a properly sized (well fitting) escutcheon plate. The escutcheon plate shall overlap the wall penetration by at least 3/8 inches.

3.2.1.3 Pipes Passing Through Hangers

a. Insulation, whether hot or cold application, shall be continuous through hangers. All horizontal pipes 2 inches and smaller shall be supported on hangers with the addition of a Type 40 protection shield to protect the insulation in accordance with MSS SP-69. Whenever insulation shows signs of being compressed, or when the insulation or jacket shows visible signs of distortion at or near the support shield, insulation inserts as specified below for piping larger than 2 inches shall be installed.

Horizontal pipes larger than 2 inches and below 60 degrees F shall be supported on hangers with the addition of a Type 40 protection shield in accordance with MSS SP-69. An insulation insert of cellular glass, calcium silicate (or perlite above 80 F), or the necessary strength polyisocyanurate shall be installed above each shield. The insert shall cover not less than the bottom 180-degree arc of the pipe. Inserts shall be the same thickness as the insulation, and shall extend 2 inches on each end beyond the protection shield. When insulation inserts are required per the above, and the insulation thickness is less than 1 inch, wooden or cork dowels or blocks may be installed between the pipe and the shield to prevent the weight of the pipe from crushing the insulation, as an option to installing insulation inserts. The insulation jacket shall be continuous over the wooden dowel, wooden block, or insulation insert.

c. Vertical pipes shall be supported with either Type 8 or Type 42 riser clamps with the addition of two Type 40 protection shields in accordance with MSS SP-69 covering the 360-degree arc of the insulation. An insulation insert of cellular glass or calcium silicate shall be installed between each shield and the pipe. The insert shall cover the 360-degree arc of the pipe. Inserts shall be the same thickness as the insulation, and shall extend 2 inches on each end beyond the protection shield. When insulation inserts are required per the above, and the insulation thickness is less than 1 inch, wooden or cork dowels or blocks may be installed between the pipe and the shield to prevent the hanger from crushing the insulation, as an option instead of installing insulation inserts. The insulation jacket shall be continuous over the wooden dowel, wooden block, or insulation insert. The vertical weight of the pipe shall be supported with hangers located in a horizontal section of the pipe. When the pipe riser is longer than 30 feet, the weight of the pipe shall be additionally supported with hangers in the vertical run of the pipe that are directly clamped to the pipe, penetrating the pipe insulation. These hangers shall be insulated and the insulation jacket sealed as indicated herein for anchors in a similar service.

d. Inserts shall be covered with a jacket material of the same appearance and quality as the adjoining pipe insulation jacket, shall overlap the adjoining pipe jacket 1-1/2 inches, and shall be sealed as required for the pipe jacket. The jacket material used to cover inserts in flexible elastomeric cellular insulation shall conform to ASTM C 1136, Type 1, and is allowed to be of a different material than the adjoining insulation material.

3.2.1.4 Flexible Elastomeric Cellular Pipe Insulation

Flexible elastomeric cellular pipe insulation shall be tubular form for pipe sizes 6 inches and less. Type II sheet insulation used on pipes larger than 6 inches shall not be stretched around the pipe. On pipes larger than 12 inches, the insulation shall be adhered directly to the pipe on the lower 1/3 of the pipe. Seams shall be staggered when applying multiple layers of insulation. Sweat fittings shall be insulated with miter-cut pieces the same size as on adjacent piping. Screwed fittings shall be insulated with sleeved fitting covers fabricated from miter-cut pieces and shall be overlapped and sealed to the adjacent pipe insulation.

3.2.1.5 Pipes in high abuse areas.

In high abuse areas such as mechanical rooms, aluminum jackets shall be utilized. Pipe insulation to the 6 foot level shall be protected.

3.2.2 Aboveground Cold Pipelines

The following cold pipelines shall be insulated per Table I minus 30 degrees to plus 60 degrees F:

a. Domestic cold water.

b. Make-up water.

Refrigerant suction lines.

d. Air conditioner condensate drains.

e. Exposed lavatory drains and domestic water lines serving plumbing fixtures for handicap persons.

3.2.2.1 Insulation Thickness

Insulation thickness for cold pipelines shall be determined using Table I.

Table I - Cold Piping Insulation Thickness
Pipe Size (inches)

| Type of Service | Material | Run-outs up to 2 in* | 1 in & less | 1.25 - 2 in | 2.5 - 4 in | 5 - 6 in | 8 in & larger |
|---|---|---|---|---|---|---|---|
| Refrigerant suction piping | CG | | 1.5 | 1.5 | 1.5 | 1.5 | 1.5 |
| | FC | | 1.0 | 1.0 | 1.0 | 1.0 | 1.0 |
| | PF | | 1.5 | 1.5 | 1.5 | 1.5 | 1.5 |
| | PC | | 1.0 | 1.0 | 1.0 | 1.0 | 1.0 |
| Cold domestic water, above and below ceilings | CG | 1.5 | 1.5 | 1.5 | 1.5 | 1.5 | 1.5 |
| | FC | 3/8 | 3/8 | 3/8 | 3/8 | 3/8 | 3/8 |
| | PF | 1.5 | 1.5 | 1.5 | 1.5 | 1.5 | 1.5 |
| | PC | 1.0 | 1.0 | 1.0 | 1.0 | 1.0 | 1.0 |
| Exposed lavatory drains and domestic water lines serving& plumbing fixtures for handicap personnel | FC | 0.5 | 0.5 | 0.5 | 0.5 | 3/4 | 3/4 |
| | MF | 0.5 | 1.0 | 1.0 | 1.5 | 1.5 | 1.5 |
| Air conditioning condensate drain located inside building | FC | | 3/8 | 0.5 | 0.5 | N/A | N/A |
| | PF | | 1.5 | 1.5 | 1.5 | N/A | N/A |
| | PC | | 1.0 | 1.0 | 1.0 | N/A | N/A |

Table I - Cold Piping Insulation Thickness
Pipe Size (inches)

| Type of Service | Material | Run-outs up to 2 in* | 1 in & less | 1.25 - 2 in | 2.5 - 4 in | 5 - 6 in | 8 in & larger |
|---|---|---|---|---|---|---|---|

*When run-outs to terminal units exceed 12 feet, the entire length of run-out shall be insulated like main feed pipe. Insulations may not be applied if their flame and smoke developed ratings exceed the requirements of 25/50 established in this guide specification. Layered insulations, or installation where multiple layers of the same insulation are used, must be checked for this (in particular if the insulation has been rated per ASTM E 84 for one thickness).

LEGEND:

PF - Phenolic Foam
CG - Cellular Glass
MF - Mineral Fiber
FC - Flexible Elastomeric Cellular
PC - Polyisocyanurate Foam

3.2.2.2 Jacket for Mineral Fiber, Cellular Glass, Phenolic Foam, and Polyisocyanurate Foam Insulated Pipe

Insulation shall be covered with a factory applied vapor retarder jacket or field applied seal welded PVC jacket. Insulation inside the building, to be protected with an aluminum jacket, shall have the insulation and vapor retarder jacket installed as specified herein. The aluminum jacket shall be installed as specified for piping exposed to weather, except sealing of the laps of the aluminum jacket is not required. In high abuse areas such as janitor closets and traffic areas in equipment rooms, kitchens, and mechanical rooms, aluminum jackets shall be utilized. Pipe insulation to the 6 ft level shall be protected.

3.2.2.3 Insulation for Straight Runs (Mineral Fiber, Cellular Glass, Phenolic Foam and Polyisocyanurate Foam)

a. Insulation shall be applied to the pipe with joints tightly butted. All butted joints and ends shall be sealed with joint sealant and sealed with a vapor retarder coating or PVDC adhesive tape.

b. Longitudinal laps of the jacket material shall overlap not less than 1-1/2 inches. Butt strips 3 inches wide shall be provided for circumferential joints.

c. Laps and butt strips shall be secured with adhesive and stapled on 4 inch centers if not factory self-sealing. If staples are used, they shall be sealed per item "e." below. Note that staples are not required with cellular glass systems.

d. Factory self-sealing lap systems may be used when the ambient temperature is between 40 degrees and 120 degrees F during installation. The lap system shall be installed in accordance with manufacturer's recommendations. Stapler shall be used only if specifically recommended by the manufacturer. Where gaps

occur, the section shall be replaced or the gap repaired by applying adhesive under the lap and then stapling.

e. All Staples, including those used to repair factory self-seal lap systems, shall be coated with a vapor retarder coating or PVDC adhesive tape. All seams, except those on factory self-seal systems shall be coated with vapor retarder coating or PVDC adhesive tape.

f. Breaks and punctures in the jacket material shall be patched by wrapping a strip of jacket material around the pipe and securing it with adhesive, stapling, and coating with vapor retarder coating or PVDC adhesive tape. The patch shall extend not less than 1-1/2 inches past the break.

g. At penetrations such as thermometers, the voids in the insulation shall be filled and sealed with vapor retarder coating or PVDC adhesive tape.

3.2.2.4 Insulation for Fittings and Accessories

a. Pipe insulation shall be tightly butted to the insulation of the fittings and accessories. The butted joints and ends shall be sealed with joint sealant and sealed with a vapor retarder coating or PVDC adhesive tape.

b. Precut or preformed insulation shall be placed around all fittings and accessories and shall conform to MICA plates except as modified herein: 5 for anchors; 10, 11, and 13 for fittings; 14 for valves; and 17 for flanges and unions. Insulation shall be the same insulation as the pipe insulation, including same density, thickness, and thermal conductivity. Where precut/preformed is unavailable, rigid preformed pipe insulation sections may be segmented into the shape required. Insulation of the same thickness and conductivity as the adjoining pipe insulation shall be used. If nesting size insulation is used, the insulation shall be overlapped 2 inches or one pipe diameter. Elbows insulated using segments shall conform to MICA Tables 12.20 "Mitered Insulation Elbow'.

c. Upon completion of insulation installation on flanges, unions, valves, anchors, fittings and accessories, terminations, seams, joints and insulation not protected by factory vapor retarder jackets or PVC fitting covers shall be protected with PVDC adhesive tape or two coats of vapor retarder coating with a minimum total thickness of 1/16 inch, applied with glass tape embedded between coats. Tape seams shall overlap 1 inch. The coating shall extend out onto the adjoining pipe insulation 2 inches. Fabricated insulation with a factory vapor retarder jacket shall be protected with PVDC adhesive tape or two coats of vapor retarder coating with a minimum thickness of 1/16 inch and with a 2 inch wide glass tape embedded between coats. Where fitting insulation butts to pipe insulation, the joints shall be sealed with a vapor retarder coating and a 4 inch wide ASJ tape which matches the jacket of the pipe insulation.

d. Anchors attached directly to the pipe shall be insulated for a sufficient distance to prevent condensation but not less than 6 inches from the insulation surface.

e. Insulation shall be marked showing the location of unions, strainers, and check valves.

3.2.2.5 Optional PVC Fitting Covers

At the option of the Contractor, premolded, one or two piece PVC fitting covers may be used in lieu of the vapor retarder and embedded glass tape. Factory precut or premolded insulation segments shall be used under the fitting covers for elbows. Insulation segments shall be the same insulation as the pipe insulation including same density, thickness, and thermal conductivity. The covers shall be secured by PVC vapor retarder tape, adhesive, seal welding or with tacks made for securing PVC covers. Seams in the cover, and tacks and laps to adjoining pipe insulation jacket, shall be sealed with vapor retarder tape to ensure that the assembly has a continuous vapor seal.

3.2.3 Aboveground Hot Pipelines

The following hot pipelines above 60 degrees F shall be insulated per Table II:

a. Domestic hot water supply & re-circulating system.

3.2.3.1 Insulation Thickness

Insulation thickness for hot pipelines shall be determined using Table II.

LEGEND:

PF - Phenolic Foam
CG - Cellular Glass
CS - Calcium Silicate
MF - Mineral Fiber
FC - Flexible Elastomeric Cellular
PL - Perlite
PC - Polyisocyanurate Foam

Table II - Hot Piping Insulation Thickness
Pipe Size (inches)

| Type of Service (degrees F) | Material | Run-outs up to 2 in * | 1 in & less | 1.25 - 2 in | 2.5 - 4 in | 5 - 6 in | 8 in & larger |
|---|---|---|---|---|---|---|---|
| Hot domestic water supply | CG | 1.5 | 1.5 | 1.5 | 1.5 | 1.5 | 1.5 |
| | FC | 0.5 | 0.5 | 1.0 | 1.0 | 1.5 | 1.5 |
| | PF | 0.5 | 0.5 | 1.0 | 1.0 | 1.0 | 1.0 |
| | MF | 0.5 | 1.5 | 1.5 | 1.5 | 1.5 | 1.5 |
| | PC | 1.0 | 1.0 | 1.0 | 1.0 | 1.0 | 1.0 |

* When run-outs to terminal units exceed 12 feet, the entire length of run-out shall be insulated like the main feed pipe.

3.2.3.2 Jacket for Insulated Hot Pipe, Except Pipe Insulated with Flexible Elastomeric Cellular

Insulation shall be covered, in accordance with manufacturer's recommendations, with a factory applied Type II jacket or field applied aluminum where required or seal welded PVC.

3.2.3.3 Insulation for Straight Runs

a. Insulation shall be applied to the pipe with joints tightly butted.

b. Longitudinal laps of the jacket material shall overlap not less than 1-1/2 inches, and butt strips 3 inches wide shall be provided for circumferential joints.

c. Laps and butt strips shall be secured with adhesive and stapled on 4 inch centers if not factory self-sealing. Adhesive may be omitted where pipe is concealed.

d. Factory self-sealing lap systems may be used when the ambient temperature is between 40 degrees and 120 degrees F and shall be installed in accordance with manufacturer's instructions. Laps and butt strips shall be stapled whenever there is non-adhesion of the system. Where gaps occur, the section shall be replaced or the gap repaired by applying adhesive under the lap and then stapling.

e. Breaks and punctures in the jacket material shall be patched by either wrapping a strip of jacket material around the pipe and securing with adhesive and staple on 4 inch centers (if not factory self-sealing), or patching with tape and sealing with a brush coat of vapor retarder coating. Adhesive may be omitted where pipe is concealed. Patch shall extend not less than 1-1/2 inches past the break.

f. Installation of flexible elastomeric cellular pipe insulation shall be by slitting the tubular sections and applying them onto the piping or tubing. Alternately, whenever possible slide un-slit sections over the open ends of piping or tubing. All seams and butt joints shall be secured and sealed with adhesive. When using self seal products only the butt joints shall be secured with adhesive. Insulation shall be pushed on the pipe, never pulled. Stretching of insulation may result in open seams and joints. All edges shall be clean cut. Rough or jagged edges of the insulation shall not be permitted. Proper tools such as sharp knives shall be used. Type II sheet insulation when used on pipe larger than 6 inches shall not be stretched around the pipe. On pipes larger than 12 inches, adhere sheet insulation directly to the pipe on the lower 1/3 of the pipe.

3.2.3.4 Insulation for Fittings and Accessories

a. Pipe insulation shall be tightly butted to the insulation of the fittings and accessories.

b. Precut or preformed insulation shall be placed around all fittings and accessories and shall conform to MICA plates, except as modified herein: 5 for anchors; 10, 11, 12,and 13 for fittings; 14, 15 and 16 for valves; 17 for flanges and unions; and 18 for

couplings. Insulation shall be the same as the pipe insulation, including same density, thickness, and thermal conductivity. Where precut/preformed is unavailable, rigid preformed pipe insulation sections may be segmented into the shape required. Insulation of the same thickness and conductivity as the adjoining pipe insulation shall be used. If nesting size insulation is used, the insulation shall be overlapped 2 inches or one pipe diameter. Elbows insulated using segments shall conform to MICA Tables 12.20 "Mitered Insulation Elbow".

c. Upon completion of installation of insulation on flanges, unions, valves, anchors, fittings and accessories, terminations and insulation not protected by factory jackets or PVC fitting covers shall be protected with two coats of adhesive applied with glass tape embedded between coats. Tape seams shall overlap 1 inch. Adhesive shall extend onto the adjoining insulation not less than 2 inches. The total dry film thickness shall be not less than 1/16 inch.

d. Insulation terminations shall be tapered to unions at a 45-degree angle.

e. At the option of the Contractor, factory pre-molded one- or two-piece PVC fitting covers may be used in lieu of the adhesive and embedded glass tape. Factory pre-molded segments or factory or field cut blanket insert insulation segments shall be used under the cover and shall be the same thickness as adjoining pipe insulation. The covers shall be secured by PVC vapor retarder tape, adhesive, seal welding or with tacks made for securing PVC covers.

### 3.2.4 Piping Exposed to Weather

Piping exposed to weather shall be insulated and jacketed as specified for the applicable service inside the building. After this procedure, an aluminum jacket or PVC jacket shall be applied. PVC jacketing requires no factory-applied jacket beneath it, however an all service jacket shall be applied if factory applied jacketing is not furnished. Flexible elastomeric cellular insulation exposed to weather shall be treated in accordance with paragraph INSTALLATION OF FLEXIBLE ELASTOMERIC CELLULAR INSULATION.

#### 3.2.4.1 Aluminum Jacket

The jacket for hot piping may be factory applied. The jacket shall overlap not less than 2 inches at longitudinal and circumferential joints and shall be secured with bands at not more than 12 inch centers. Longitudinal joints shall be overlapped down to shed water and located at 4 or 8 o'clock positions. Joints on piping 60 degrees F and below shall be sealed with caulking while overlapping to prevent moisture penetration. Where jacketing on piping 60 degrees F and below abuts an un-insulated surface, joints shall be caulked to prevent moisture penetration. Joints on piping above 60 degrees F shall be sealed with a moisture retarder.

#### 3.2.4.2 Insulation for Fittings

Flanges, unions, valves, fittings, and accessories shall be insulated and finished as specified for the applicable service. Two coats of breather emulsion type weatherproof mastic (impermeable to water, permeable to air)

recommended by the insulation manufacturer shall be applied with glass tape embedded between coats. Tape overlaps shall be not less than 1 inch and the adjoining aluminum jacket not less than 2 inches. Factory preformed aluminum jackets may be used in lieu of the above. Molded PVC fitting covers shall be provided when PVC jackets are used for straight runs of pipe. PVC fitting covers shall have adhesive welded joints and shall be weatherproof.

3.2.4.3 PVC Jacket

PVC jacket shall be ultraviolet resistant and adhesive welded weather tight with manufacturer's recommended adhesive. Installation shall include provision for thermal expansion.

3.3 DUCT INSULATION INSTALLATION

Except for oven hood exhaust duct insulation, corner angles shall be installed on external corners of insulation on ductwork in exposed finished spaces before covering with jacket.

3.3.1 Duct Insulation Thickness

Duct insulation thickness shall be in accordance with Table III. Maximum thickness for flexible elastomeric cellular insulation shall not exceed 25 mm, and maximum thickness for polyisocyanurate foam insulation shall not exceed 40 mm to comply with ASTM E 84 flame spread/smoke developed ratings of 25/50

Table III - Minimum Duct Insulation (inches)

| | |
|---|---|
| Cold Air Ducts | 2.0 |
| Relief Ducts | 1.5 |
| Fresh Air Intake Ducts | 1.5 |
| Warm Air Ducts | 2.0 |
| Relief Ducts | 1.5 |
| Fresh Air Intake Ducts | 1.5 |

Maximum thickness for flexible elastomeric cellular insulation shall not exceed 1 inch and maximum thickness for polyisocyanurate foam insulation shall not exceed 1.5 inch, to comply with ASTM E 84 flame spread/smoke developed ratings of 25/50.

3.3.2 Insulation and Vapor Retarder for Cold Air Duct

Insulation and vapor retarder shall be provided for the following cold air ducts and associated equipment.

a. Supply ducts.

b. Return air ducts.

c. Relief ducts.

d. Plenums.

e. Fresh air intake ducts.

f. Filter boxes.

Insulation for rectangular ducts shall be flexible type where concealed, minimum density 3/4 pcf and rigid type where exposed, minimum density 3 pcf. Insulation for round/oval ducts shall be flexible type, minimum density 3/4 pcf with a factory Type I or II jacket; or, a semi rigid board, minimum density 3 pcf, formed or fabricated to a tight fit, edges beveled and joints tightly butted and staggered, with a factory applied Type I or II all service jacket. Insulation for exposed ducts shall be provided with either a white, paint-able, factory-applied Type I jacket or a vapor retarder jacket coating finish as specified. Insulation on concealed duct shall be provided with a factory-applied Type I or II vapor retarder jacket. The total dry film thickness shall be approximately 1/16 inch.. Duct insulation shall be continuous through sleeves and prepared openings except firewall penetrations. Duct insulation terminating at fire dampers, shall be continuous over the damper collar and retaining angle of fire dampers, which are exposed to unconditioned air and which may be prone to condensate formation. Duct insulation and vapor retarder shall cover the collar, neck, and any un-insulated surfaces of diffusers, registers and grills. Vapor retarder materials shall be applied to form a complete unbroken vapor seal over the insulation. Sheet Metal Duct shall be sealed in accordance with Section 15895 AIR SUPPLY, DISTRIBUTION, VENTILATION, AND EXHAUST SYSTEM.

3.3.2.1 Installation on Concealed Duct

a. For rectangular, oval or round ducts, insulation shall be attached by applying adhesive around the entire perimeter of the duct in 6 inch wide strips on 12 inch centers.

b. For rectangular and oval ducts, 24 inches and larger insulation shall be additionally secured to bottom of ducts by the use of mechanical fasteners. Fasteners shall be spaced on 16 inch centers and not more than 16 inches from duct corners.

c. For rectangular, oval and round ducts, mechanical fasteners shall be provided on sides of duct risers for all duct sizes. Fasteners shall be spaced on 16 inch centers and not more than 16 inches from duct corners.

d. Insulation shall be impaled on the mechanical fasteners (self stick pins) where used and shall be pressed thoroughly into the adhesive. Care shall be taken to ensure vapor retarder jacket joints overlap 2 inches. The insulation shall not be compressed to a thickness less than that specified. Insulation shall be carried over standing seams and trapeze-type duct hangers.

e. Self-locking washers shall be installed where mechanical fasteners are used. The pin shall be trimmed back and bent over.

f. Jacket overlaps shall be secured with staples and tape as necessary to ensure a secure seal. Staples, tape and seams shall

be coated with a brush coat of vapor retarder coating or PVDC adhesive tape.

g. Breaks in the jacket material shall be covered with patches of the same material as the vapor retarder jacket. The patches shall extend not less than 2 inches beyond the break or penetration in all directions and shall be secured with tape and staples. Staples and tape joints shall be sealed with a brush coat of vapor retarder coating or PVDC adhesive tape.

h. At jacket penetrations such as hangers, thermometers, and damper operating rods, voids in the insulation shall be filled and the penetration sealed with a brush coat of vapor retarder coating or PVDC adhesive tape.

i. Insulation terminations and pin punctures shall be sealed and flashed with a reinforced vapor retarder coating finish or tape with a brush coat of vapor retarder coating.. The coating shall overlap the adjoining insulation and un-insulated surface 2 inches. Pin puncture coatings shall extend 2 inches from the puncture in all directions.

j. Where insulation standoff brackets occur, insulation shall be extended under the bracket and the jacket terminated at the bracket.

3.3.2.2 Installation on Exposed Duct Work

a. For rectangular ducts, rigid insulation shall be secured to the duct by mechanical fasteners on all four sides of the duct, spaced not more than 12 inches apart and not more than 3 inches from the edges of the insulation joints. A minimum of two rows of fasteners shall be provided for each side of duct 12 inches and larger. One row shall be provided for each side of duct less than 12 inches.

b. Duct insulation shall be formed with minimum jacket seams. Each piece of rigid insulation shall be fastened to the duct using mechanical fasteners. When the height of projections is less than the insulation thickness, insulation shall be brought up to standing seams, reinforcing, and other vertical projections and shall not be carried over. Vapor retarder jacket shall be continuous across seams, reinforcing, and projections. When height of projections is greater than the insulation thickness, insulation and jacket shall be carried over.

c. Insulation shall be impaled on the fasteners; self-locking washers shall be installed and the pin trimmed or bent over.

d. Joints in the insulation jacket shall be sealed with a 4 inchwide strip of tape. Tape seams shall be sealed with a brush coat of vapor retarder coating.

e. Breaks and ribs or standing seam penetrations in the jacket material shall be covered with a patch of the same material as the jacket. Patches shall extend not less than 2 inches beyond the break or penetration and shall be secured with tape and stapled. Staples and joints shall be sealed with a brush coat of vapor retarder coating.

f. At jacket penetrations such as hangers, thermometers, and damper operating rods, the voids in the insulation shall be filled and the penetrations sealed with a brush coat of vapor retarder coating.

g. Insulation terminations and pin punctures shall be sealed and flashed with a reinforced vapor retarder coating finish. The coating shall overlap the adjoining insulation and un-insulated surface 2 inches. Pin puncture coatings shall extend 2 inches from the puncture in all directions.

h. Oval and round ducts, flexible type, shall be insulated with factory Type I jacket insulation with minimum density of 3/4 pcf, attached as per MICA standards.

3.3.3 Insulation for Warm Air Duct

Insulation and vapor barrier shall be provided for the following warm air ducts and associated equipment:.

a. Supply ducts.

b. Return air ducts

c. Relief air ducts

d. Plenums

e. Fresh air intake ducts

f. Filter boxes

Insulation for rectangular ducts shall be flexible type where concealed, minimum density 3/4 pcf; and rigid type where exposed, minimum density 3 pcf. Insulation on exposed ducts shall be provided with a white, paint-able, factory-applied Type II jacket, or finished with adhesive finish. Flexible type insulation shall be used for round ducts, minimum density 3/4 pcf with a factory-applied Type II jacket. Insulation on concealed duct shall be provided with a factory-applied Type II jacket. Adhesive finish where indicated to be used shall be accomplished by applying two coats of adhesive with a layer of glass cloth embedded between the coats. The total dry film thickness shall be approximately 1/16 inch. Duct insulation shall be continuous through sleeves and prepared openings. Duct insulation shall terminate at fire dampers and flexible connections.

3.3.3.1 Installation on Concealed Duct

a. For rectangular, oval and round ducts, insulation shall be attached by applying adhesive around the entire perimeter of the duct in 6 inch wide strips on 12 inch centers.

b. For rectangular and oval ducts 24 inches and larger, insulation shall be secured to the bottom of ducts by the use of mechanical fasteners. Fasteners shall be spaced on 18 inch centers and not

more than 18 inches from duct corner.

c. For rectangular, oval and round ducts, mechanical fasteners shall be provided on sides of duct risers for all duct sizes. Fasteners shall be spaced on 18 inch centers and not more than 18 inches from duct corners.

d. The insulation shall be impaled on the mechanical fasteners where used. The insulation shall not be compressed to a thickness less than that specified. Insulation shall be carried over standing seams and trapeze-type hangers.

e. Self-locking washers shall be installed where mechanical fasteners are used and the pin trimmed and bent over.

f. Insulation jacket shall overlap not less than 2 inches at joints and the lap shall be secured and stapled on 4 inch centers.

3.3.3.2 Installation on Exposed Duct

a. For rectangular ducts, the rigid insulation shall be secured to the duct by the use of mechanical fasteners on all four sides of the duct, spaced not more than 16 inches apart and not more than 6 inches from the edges of the insulation joints. A minimum of two rows of fasteners shall be provided for each side of duct 12 inches and larger and a minimum of one row for each side of duct less than 12 inches.

b. Duct insulation with factory-applied jacket shall be formed with minimum jacket seams, and each piece of rigid insulation shall be fastened to the duct using mechanical fasteners. When the height of projection is less than the insulation thickness, insulation shall be brought up to standing seams, reinforcing, and other vertical projections and shall not be carried over the projection. Jacket shall be continuous across seams, reinforcing, and projections. Where the height of projections is greater than the insulation thickness, insulation and jacket shall be carried over the projection.

c. Insulation shall be impaled on the fasteners; self-locking washers shall be installed and pin excess clipped and bent over.

d. Joints on jacketed insulation shall be sealed with a 4 inch wide strip of tape and brushed with vapor retarder coating.

e. Breaks and penetrations in the jacket material shall be covered with a patch of the same material as the jacket. Patches shall extend not less than 2 inches beyond the break or penetration and shall be secured with adhesive and stapled.

f. Insulation terminations and pin punctures shall be sealed with tape and brushed with vapor retarder coating.

g. Oval and round ducts, flexible type, shall be insulated with factory Type I jacket insulation, minimum density of 3/4 pcf attached by staples spaced not more than 16 inches and not more than 6 inches from the degrees of joints. Joints shall be sealed in accordance with item "d." above.

3.3.4 Ducts Handling Air for Dual Purpose

For air handling ducts for dual purpose below and above 60 degrees F, ducts shall be insulated as specified for cold air duct.

3.3.5 Duct Test Holes

After duct systems have been tested, adjusted, and balanced, breaks in the insulation and jacket shall be repaired in accordance with the applicable section of this specification for the type of duct insulation to be repaired.

-- End of Section --

SECTION TABLE OF CONTENTS

DIVISION 15 - MECHANICAL

SECTION 15101

CONTROL VALVES, FUELING SYSTEM

**04/99; Rev. 12/00**

PART 1 GENERAL

1.1 REFERENCES
1.2 AVAILABILITY
1.3 SUBMITTALS

PART 2 PRODUCTS

2.1 DESIGN CONDITIONS
2.2 CONTROL VALVE CONSTRUCTION
2.2.1 General
2.2.1.1 Bodies, Bonnets, and Covers
2.2.1.2 Valve Seats
2.2.1.3 Valve Discs
2.2.1.4 Diaphragm Assembly
2.2.1.5 Bolts, Screws and Nuts
2.2.1.6 Pilot Control System and Auxiliary Piping
2.2.1.7 Pilot Valves
2.2.1.8 Solenoids
2.2.2 Serviceability of Main Valve Internal Parts
2.2.3 Total Lengths
2.2.4 Flanges
2.2.5 Identification
2.2.5.1 Main Valve Body
2.2.5.2 Main Valve Cover
2.2.5.3 Brass Name Plates
2.2.5.4 Inlet Name Plate
2.2.5.5 Outlet Name Plate
2.2.5.6 Pilot Valves
2.3 MATERIALS
2.4 INDIVIDUAL CONTROL VALVE OPERATIONAL REQUIREMENTS
2.4.1 High Liquid Level Shut-Off Valve (HLV-1 AND HLV-2)
2.4.1.1 Size
2.4.1.2 Flow
2.4.1.3 Operation
2.4.1.4 Check Valve Feature
2.4.1.5 Manual Test Feature
2.4.1.6 Strainer
2.4.1.7 Pressure Sensitive Close Feature
2.4.1.8 Minimum Differential Pressure Feature
2.4.2 Non-Surge Check Valve (CV-1 THRU CV-8)
2.4.2.1 Size
2.4.2.2 Flow
2.4.2.3 Operation
2.4.2.4 Quick closure
2.4.2.5 Flow Control

2.4.2.6 Strainer
2.4.2.7 Emergency Shut-off Operation
2.4.2.8 Solenoid Control
2.4.3 Issue and Receiving Filter Separator Control Valve (FSCV-1 to FSCV-7)
2.4.3.1 Size
2.4.3.2 Flow
2.4.3.3 Operation
2.4.3.4 Check Valve Feature
2.4.3.5 Water Slug Shut-Off
2.4.4 Issue and Receiving Filter Separator Float Control Valve with Manual Tester (FC-1 THRU FC-7)
2.4.4.1 Operation
2.4.4.2 Float Control Pilot and Tester
2.4.4.3 Float Control Installation
2.4.5 Back Pressure Control Valve (BPCV-1)
2.4.5.1 Size
2.4.5.2 Flow
2.4.5.3 Operation
2.4.5.4 Check Valve Feature
2.4.5.5 Solenoid Control
2.4.5.6 Speed Control
2.4.6 Pressure Control Valve (PCV-1)
2.4.6.1 Size
2.4.6.2 Flow
2.4.6.3 Operation
2.4.6.4 Check Valve Feature
2.4.6.5 Solenoid Control
2.4.6.6 Speed Control
2.4.6.7 Sensor Tubing
2.4.7 Defuel/Flush Valve (D/FV-1)
2.4.7.1 Size
2.4.7.2 Flow
2.4.7.3 Operation
2.4.7.4 Check Valve Feature
2.4.7.5 Solenoid Control
2.4.7.6 Speed Control
2.4.8 Hydrant Control Valve (HCV)
2.4.8.1 Size
2.4.8.2 Flow
2.4.8.3 Operation
2.4.8.4 Quick Closure
2.4.8.5 Deadman Control
2.4.8.6 Defuel
2.4.8.7 Speed Control
2.4.8.8 Thermal Relief
2.4.8.9 Adapter
2.4.8.10 Strainer
2.4.8.11 Minimum Differential Pressure Feature
2.4.9 Overfill Valve for Product Recovery Tank (OV-1)
2.4.9.1 Size
2.4.9.2 Capacity
2.4.9.3 Operation
2.4.9.4 Control Float
2.4.9.5 Pressure Reservoir
2.4.9.6 Thermal Relief
2.4.9.7 Limit Switch
2.4.9.8 Strainer
2.4.10 Truck Fill Stand Control Valve (TFV)

2.4.10.1 Quantity
2.4.11 System Integrity Test/Pantograph Flush Control Valve (TCV-1)
2.4.11.1 Size
2.4.11.2 Flow
2.4.11.3 Operation
2.4.11.4 Speed Control
2.4.12 Pantograph Pressure Control Valve
2.4.12.1 Size
2.4.12.2 Flow
2.4.12.3 Operation
2.4.12.4 Quick Closure
2.4.12.5 Speed Control
2.4.12.6 Defuel
2.4.12.7 Thermal Relief
2.4.12.8 Strainer

PART 3 EXECUTION

3.1 VALVE TESTING AND START-UP SUPPORT
3.1.1 Standard 1-Year Warranty Period
3.2 TRAINING

-- End of Section Table of Contents --

SECTION 15101

CONTROL VALVES, FUELING SYSTEM
**04/99; Rev. 12/00**

PART 1 GENERAL

1.1 REFERENCES

The publications listed below form a part of this specification to the extent referenced. The publications are referred to in the text by basic designation only.

AMERICAN SOCIETY OF MECHANICAL ENGINEERS (ASME)

| | |
|---|---|
| ASME B16.5 | (1996) Pipe Flanges and Flanged Fittings |
| ASME B16.24 | (1991; R1998) Cast Copper Alloy Pipe Flanges, Class 150, 300, 400, 600, 900, 1500, and 2500, and Flanged Fittings, Class 150 and 300 |
| ASME BPV VIII Div 1 | (1998) Boiler and Pressure Vesser Code; Section VIII, Pressure Vessels Division 1 - Basic Coverage I |

AMERICAN SOCIETY OF TESTING AND MATERIALS (ASTM)

| | |
|---|---|
| ASTM A 194/A 194M | (1996) Standard Specification for Carbon and Alloy Steel Nuts for Bolts for High-Pressure and High Temperature Service |
| ASTM A 216/A 216M | (1993; R1998) Standard Specification for Steel Castings, Carbon, Suitable for Fusion Welding, for High Temperature Service |
| ASTM A 269 | (1996) Seamless and Welded Austenitic Stainless Steel Tubing for General Service |
| ASTM A 320/A 320M | (2000a) Standard Specification for Alloy Steel Bolting Materials for Low-Temperature Service |
| ASTM A 536 | (1984; R1999 e1) Standard Specifications for Ductile Iron Castings |
| ASTM A 743/A 743M | (1998a e1) Standard Specification for Castings, Iron-Chromium, Iron-Chromium-Nickel, Corrosion Resistant, for General Application |
| ASTM B 26/B 26M | (1999) Standard Specification for Aluminum Alloy Sand Castings |

| | |
|---|---|
| ASTM D 751 | (2000) Standard Test Method for Coated Fabrics |
| ASTM D 2000 | (1999) Standard Classification System for Rubber Products in Automotive Applications |

MILITARY SPECIFICATIONS (MS)

| | |
|---|---|
| MS MIL-A-8625 | (1989; Rev E, Am. 1) Anodic Coatings, for Aluminum and Aluminum Alloys |
| MS MIL-I-17563 | (1985; Rev B)Impregnants for Aluminum, Copper, Iron, Magnesium and Zinc Alloy Castings |

MILITARY STANDARDS (MIL-STD)

| | |
|---|---|
| MIL-STD 276 | (1956; Basic) Impregnation of Porous NonFerrous Metal Castings |

NATIONAL FIRE PROTECTION AGENCY (NFPA)

| | |
|---|---|
| NFPA 70 | (2002) National Electrical Code |

SOCIETY OF AUTOMOTIVE ENGINEERS (SAE)

| | |
|---|---|
| SAE J 200 | (1991) Classification System for Rubber Materials |
| SAE J 429 | (1983) Mechanical and Material Requirements for Externally Threaded Fasteners |

## 1.2 AVAILABILITY

Control valves specified herein shall be of one manufacturer. The valve manufacturer shall also produce the hydraulically-operated pilots.

## 1.3 SUBMITTALS

Government approval is required for submittals with a "G" designation; submittals not having a "G" designation are for information only. When used, a designation following the "G" designation identifies the office that will review the submittal for the Government. The following shall be submitted in accordance with Section 01330 SUBMITTAL PROCEDURES:

SD-02 Shop Drawings

Control Valves; G-AE.

For each type control valve required and specified, submit sectional drawings of main valve and control pilot systems.

SD-03 Product Data

Control Valves; G-AE.

For each type control valve required and specified, submit the following:

a. Flow diagrams.

b. Operational description of the control valve and pilot control system.

c. Complete valve assembly list of materials, along with material Certificates of Conformance, used in the manufacture of the control valves and pilot systems.

SD-06 Test Reports

Control Valves

Before shipment, each individual control valve shall be operationally tested and adjusted by manufacturer under actual flow conditions utilizing a hydrocarbon test fluid with a specific gravity comparable to JP-8 fuel. Manufacturer shall submit certified records of test data.

SD-07 Certificates

Previous Air Force/Military Projects; G-AE.

Qualified Engineers; G-AE.

Field Assistance; G-AE.

Provide the following:

a. Proof of experience on previous Air Force/Military projects.

b. Number of qualified (factory trained) engineers available to provide startup support.

c. Written assurance as to ability to respond to specified time for field assistance.

SD-10 Operation and Maintenance Data

Operation and Maintenance Manuals; G-AE.

Operation and maintenance information shall be submitted for each individual type control valve specified herein. Refer to Section 01730 FACILITY OPERATION AND MAINTENANCE MANUAL for the information to be submitted.

## PART 2 PRODUCTS

### 2.1 DESIGN CONDITIONS

Shall be as specified in Section 15050 MECHANICAL EQUIPMENT, FUELING. Components to be suitable for ANSI Class 150 (275 psig at 100 degrees F.).

## 2.2 CONTROL VALVE CONSTRUCTION

### 2.2.1 General

Control valves shall be single-seated globe type, diaphragm actuated, hydraulically operated valves. Valves shall consist of three (3) major components: the valve body, valve cover, and diaphragm assembly. The diaphragm assembly shall be the only moving part. In the event of diaphragm failure, valve shall fail closed against flow, unless otherwise indicated. The main valve shall be drip-tight when closed. Each valve shall have an external indicator to show the position of the valve disc at all times. Control valves shall be shipped from the factory as a complete assembly with all pilot controls and pilot auxiliary piping properly installed on the main valve. Materials which come in contact with the fuel shall be resistant to the effects of and not harmful to aircraft engine fuel and shall be aluminum or stainless steel unless noted otherwise. High level shut-off valve bodies shall be electroless nickel plated ductile iron.

Materials for control valves, and items to be mounted on the valves shall be as follows:

#### 2.2.1.1 Bodies, Bonnets, and Covers

Shall be constructed of one of the following materials:

a. Aluminum conforming to ASTM B 26/B 26M, Type 356-T6 anodized in accordance with MS MIL-A-8625, Type II and surface coated in accordance with MIL-STD 276/MS MIL-I-17563.

b. Cast steel conforming to ASTM A 216/A 216M, Grade WCB internally plated with chromium, nickel or internally electroless nickel plated.

c. Cast stainless steel conforming to ASTM A 743/A 743M.

d. Ductile iron conforming to ASTM A 536, electroless nickel plated.

e. Bodies shall have flanged inlet and outlet connections. Valve shall have a screwed bottom drain plug.

#### 2.2.1.2 Valve Seats

Shall be stainless steel in accordance with ASTM A 743/A 743M. It shall be possible to remove the valve seat while the valve is connected in the line. Valve seat and upper stem bearing shall be removable and screwed in the body and/or cover. The lower stem bearing must be concentrically contained in the valve seat and shall be exposed to flow on all sides. The diameter of the valve seat shall be the same size as the inlet and/or outlet flanges of the main valve.

#### 2.2.1.3 Valve Discs

Shall contain a resilient, synthetic rubber disc conforming to ASTM D 2000 (SAE J 30200) having a rectangular cross section, contained on three and one-half (3-1/2) sides by a disc retainer and a disc guide, forming a drip tight seal against the seat. The disc shall be usable on either side. The disc guide shall be the contoured type capable of holding disc firmly in place during high differential pressure conditions that may develop across the seating surface. The disc retainer shall be capable of withstanding

rapid closing shocks.

2.2.1.4 Diaphragm Assembly

Shall form a sealed chamber in the upper portion of the valve, separating the operating fluid from the line pressure. The diaphragm assembly shall contain a valve stem which is fully guided at both ends by a bearing in the valve cover and an integral bearing in the valve seat. Valve body and cover shall be sealed by the diaphragm. Valve stem shall be stainless steel. The bearing material shall be compatible with the fuel specified and shall not contain zinc coated metals, brass, bronze, or other copper bearing alloys. The diaphragm shall be of a nonwicking material or design, with a minimum of two (2) layers of nylon fabric bonded with a minimum of three (3) layers of synthetic rubber (valves 2-1/2 inches and smaller one layer of nylon fabric). The edge area of the center hole for the valve stem shall be sealed by vulcanization. Materials to be resistant to aromatics of up to 50 percent in accordance with ASTM D 2000 (SAE J 200). The diaphragm must have a MULLINS-burst rating according to ASTM D 751 of a minimum of 600 psi per layer of nylon fabric. All diaphragm sizes must be cycle tested to a minimum of 100,000 cycles, by alternately applying pressure under the diaphragm (main valve pressure) and above the diaphragm (cover chamber pressure). That test shall be certified by the manufacturer. The diaphragm shall not be used as a seating surface. The diaphragm must be fully supported by the body and cover in either the open or closed position.

2.2.1.5 Bolts, Screws and Nuts

a. For Cast Aluminum and Cast Steel Body Valves.

(1) Bolts and Screws, cadmium plated steel in accordance with SAE J 429, Grade 5.

(2) Nuts, cadmium plated steel in accordance with ASTM A 194/A 194M, Grade 2 H.

b. For Stainless Steel Body Valves. Bolts, Screws and Nuts, ASTM A 320/A 320M, Grade B8M C.1.1.

2.2.1.6 Pilot Control System and Auxiliary Piping

Shall be stainless steel, seamless, fully annealed tubing conforming to ASTM A 269, Grade TP316, Rockwell hardness B80 or less. Wall thickness for 1/2-inch tubing to be 0.049-inch. All screwed connections shall be made by conic unions (NPT). Tubing connections shall not be welded or sealed with O-ring.

2.2.1.7 Pilot Valves

Shall have stainless steel bodies conforming to ASTM A 743/A 743M with stainless steel internal working parts. Disc and diaphragm assemblies shall be as specified herein before. The setting of adjustable type pressure operated pilot valves shall be easily adjusted by means of a single adjusting screw. The adjusting screw shall be protected by a threaded cap drilled to accommodate a lead-seal wire and a lock nut shall be provided on the adjusting screw to lock it in position at the desired

setting. The lead seal wire shall be installed after final acceptance of the system.

2.2.1.8 Solenoids

Solenoids for operation of pilot valves shall be housed in an explosion-proof case suitable for Class I, Division 1, Group D with maximum temperature rating of ("T3" -392 degrees F), hazardous locations as defined in NFPA 70. Solenoids shall operate on 120 volts, 60 cycle, single phase, alternating current. A manual type operator or needle valve to bypass the solenoid valve shall be provided for emergency manual operation.

2.2.2 Serviceability of Main Valve Internal Parts

Main valve movable parts including strainers, valve seat, stem bearings, and control system shall be replaceable without removing the main valve from the line. All nonmetallic parts shall be replaceable.

2.2.3 Total Lengths

The total valve length does not include the orifice plate flange (when used). If the control valve being supplied has the orifice plate built into its flange, the spacer provided shall bring the valve face-to-face dimension equal to those listed below plus 0.0875 of an inch. The lengths of the valves shall be equal for the following materials: cast stainless steel, cast steel and cast aluminum.

| SIZE INCHES | VALVE LENGTH (INCHES) |
|---|---|
| 1-1/2 | 8.5 |
| 2 | 9.375 |
| 3 | 12 |
| 4 | 15 |
| 6 | 20 |
| 8 | 25.4 |
| 10 | 29.8 |
| 12 | 34 |
| 14 | 39 |
| 16 | 41.375 |

Tolerance shall be ±0.030 of an inch for size one and one-half inches (1-1/2") through eight inches (8") and ±0.060 on an inch for size 10 thru 16 inches.

Control valves not meeting these face to face dimensions shall be supplied with spacers suitable for the proper installation of the valve.

2.2.4 Flanges

| | MATERIAL | SEALING SURFACE |
|---|---|---|
| A: | Cast Steel, ASME B16.5 Class 150 | Raised Face |
| B: | Cast Stainless Steel, ASME B16.5 Class 150 | Raised Face |
| C: | Cast Aluminum, Suitable for | Flat Face |

minimum working pressure of 275 psig
at 100 degrees F.

D: Ductile Iron, ASME B16.24 Class 150 Flat Face

The mating flange shall be made the same as above.

2.2.5 Identification

2.2.5.1 Main Valve Body

The following shall be cast into the main valve body:

a. Pressure Class
b. Size
c. Material
d. Foundry Heat Number and Identification
e. Manufacturer
f. Flow Pattern

2.2.5.2 Main Valve Cover

The following shall be cast into the main valve cover:

a. Size
b. Material
c. Foundry Heat Number and Identification

2.2.5.3 Brass Name Plates

Brass name plates shall be fastened to the valve. Body name plates shall list the following:

a. Size
b. Model Number
c. Stock Number
d. Manufacturer/Supplier
e. Manufacturer's Inspection Stamp

2.2.5.4 Inlet Name Plate

Inlet name plate shall list the following:

a. Size
b. "Inlet" Marking
c. Assembly Model Number
d. Part Number

2.2.5.5 Outlet Name Plate

Outlet name plate shall list the "Outlet" Marking.

2.2.5.6 Pilot Valves

Pilot valves shall be tag identified. The tag shall also have the field adjusted start up setting stamped on it.

## 2.3 MATERIALS

The type of materials which come in contact with the fuel, if not specified herein before, shall be noncorrosive.

## 2.4 INDIVIDUAL CONTROL VALVE OPERATIONAL REQUIREMENTS

Operation, performance, and special features of the individual control valves shall be as specified herein.

### 2.4.1 High Liquid Level Shut-Off Valve (HLV-1 AND HLV-2)

#### 2.4.1.1 Size

Eight-inch (8")

#### 2.4.1.2 Flow

1200 GPM

#### 2.4.1.3 Operation

High liquid level shut-off valve shall be hydraulically operated and shall be provided with a tank exterior mounted float. Activation point of the float for opening and closing the high liquid level shut-off valve shall be as shown on the drawings. Upon a rise in fluid level to the float activation point, the float control system shall cause the main valve to close tightly. The main valve shall remain closed until a drop in tank fluid level occurs. Upon a drop in fluid level beneath the float activation point, the float control shall cause the main valve to open completely.

#### 2.4.1.4 Check Valve Feature

Valve shall close rapidly when outlet pressure exceeds inlet pressure.

#### 2.4.1.5 Manual Test Feature

Manual testing of high level shut-off valve and exterior mounted float's automatic opening and closing feature shall be possible.

#### 2.4.1.6 Strainer

A 40-mesh stainless steel wire, self-cleaning strainer shall be provided in the pilot valve supply piping.

#### 2.4.1.7 Pressure Sensitive Close Feature

If the upstream pressure rises to 150 psi or above while closing, the valve will stop closing or open slightly until the pressure is less than 150 psi.

#### 2.4.1.8 Minimum Differential Pressure Feature

The valve shall be equipped with a minimum differential pressure pilot to maintain a differential pressure across the valve.

2.4.2 Non-Surge Check Valve (CV-1 THRU CV-8)

2.4.2.1 Size

Six-inch (6"); two-inch (2") for FTP-1

2.4.2.2 Flow

650 GPM; 50 GPM for FTP-1.

2.4.2.3 Operation

Non-surge check valve shall open slowly. Opening speed shall be adjustable from two (2) to 30 seconds without affecting closing of valve. Factory set for 15 seconds. The non-surge check valves shall fail closed against reverse flow in check condition. The valve design shall include an "under the disc" flow pattern.

2.4.2.4 Quick closure

Valve closure to be rapid, closing quickly when outlet pressure exceeds inlet pressure.

2.4.2.5 Flow Control

Valve to limit flow to 650 GPM (CV-1 thru CV-7), 50 GPM (CV-8). Sensing shall be by orifice. Orifice plate and fittings to be mounted on the discharge side of the control valve. Valve to modulate to limit flow without hunting. Rate of flow to be manually adjustable.

2.4.2.6 Strainer

A 40-mesh, stainless steel wire, self-cleaning strainer shall be provided in the pilot valve supply piping.

2.4.2.7 Emergency Shut-off Operation

Open/closed valve, solenoid operated. Closure shall be accomplished within 10 seconds upon power failure or activation of an emergency-stop pushbutton.

2.4.2.8 Solenoid Control

Solenoid control shall be as indicated on the drawings.

2.4.3 Issue and Receiving Filter Separator Control Valve (FSCV-1 to FSCV-7)

2.4.3.1 Size

Six-inch (6")

2.4.3.2 Flow

600 GPM

2.4.3.3 Operation

Filter Separator Control Valve shall limit flow to 600 GPM. Controlling to be by orifice. Rate of flow to be manually adjustable.

2.4.3.4 Check Valve Feature

Valve shall close rapidly when outlet pressure exceeds inlet pressure.

2.4.3.5 Water Slug Shut-Off

Valve shall close rapidly when water is sensed at filter separator sump high level as indicated by Float Control Valve float position. Manual testing of operation shall be possible.

2.4.4 Issue and Receiving Filter Separator Float Control Valve with Manual Tester (FC-1 THRU FC-7)

2.4.4.1 Operation

Float shall ride on the fuel-water interface inside filter separator sump. Activation shall initiate water slug shutoff of filter separator valve.

2.4.4.2 Float Control Pilot and Tester

The filter separator housing sump shall be fitted with a float control pilot valve assembly made of stainless steel. The pilot valve is connected to the filter separator control valve. An integral float control tester shall provide a means to remove a portion of the float ball ballast allowing the float to rise, verifying operation of the water slug and flow control valve, the integrity of the float ball.

2.4.4.3 Float Control Installation

The drain line tubing from the float control pilot shall be equipped with a swing check valve that connects to the downstream side of the water slug (FSCV) valve. The drain line shall not be connected to the Product Recovery Tank inlet piping system.

2.4.5 Back Pressure Control Valve (BPCV-1)

2.4.5.1 Size

Six-inch (6")

2.4.5.2 Flow

0-2400 GPM

2.4.5.3 Operation

Back pressure control valve shall modulate to maintain constant inlet pressure. Set-point shall be adjustable with a range of 20 psig to 200 psig. Factory set at 130 psig.

2.4.5.4 Check Valve Feature

Valve shall close rapidly when outlet pressure exceeds inlet pressure.

2.4.5.5 Solenoid Control

Solenoid control valve shall be as indicated on the drawings.

2.4.5.6 Speed Control

Valve shall close slowly without affecting the opening speed and shall be factory set for eight (8) seconds. Closing time to be adjustable with a range of two (2) to 30 seconds. Valve opening time shall be 1.0 second maximum.

2.4.6 Pressure Control Valve (PCV-1)

2.4.6.1 Size

Two-inch (2").

2.4.6.2 Flow

50 GPM under normal operating conditions.

2.4.6.3 Operation

Pressure control valve shall modulate to control inlet pressure and shall have adjustable set-point with a range of 20 psig to 200 psig. Factory set at 75 psig.

2.4.6.4 Check Valve Feature

Valve shall close rapidly when outlet pressure exceeds inlet pressure.

2.4.6.5 Solenoid Control

Solenoid control of valve shall be as indicated on drawings.

2.4.6.6 Speed Control

Provide separate opening and closing speed controls each adjustable between one (1) and 30 seconds. Factory set at three (3) seconds for opening speed and one (1) second for closing speed.

2.4.6.7 Sensor Tubing

Provide 3/4" tubing (.065" wall thickness) from pressure sensing pilot to pipe tap.

2.4.7 Defuel/Flush Valve (D/FV-1)

2.4.7.1 Size

Eight-inch (8").

2.4.7.2 Flow

300 to 2400 GPM.

2.4.7.3 Operation

Valve shall modulate to control inlet pressure and shall have adjustable set-point with a range of 20 psig to 200 psig. Factory set at 80 psig.

2.4.7.4 Check Valve Feature

Valve shall close rapidly when outlet pressure exceeds inlet pressure.

2.4.7.5 Solenoid Control

The valve shall be provided with two (2) solenoid controls and shall operate as indicated on drawings.

2.4.7.6 Speed Control

Valve shall open slowly without affecting the closing speed and shall be factory set for three seconds. Opening time to be adjustable with a range of 2 to 30 seconds.

2.4.8 Hydrant Control Valve (HCV)

2.4.8.1 Size

Four-inch (4").

2.4.8.2 Flow

600 GPM.

2.4.8.3 Operation

Hydrant control valve shall modulate, by use of a liquid sensing line from the pantograph venturi, and regulate at a maximum pressure at the skin of the aircraft of 45 psig at any flow rate from 50 GPM to 600 GPM. Pressure to be adjustable with a range of 15 psi to 75 psi. Valve, adapter and 90-degree hydrant coupler pressure drop shall not exceed 9 psi at 600 GPM with the valve fully open.

2.4.8.4 Quick Closure

Valve shall close rapidly when outlet pressure exceeds control set-point. Valve shall limit the surge pressure on the aircraft to a maximum of 120 psig when fueling at 600 GPM with an aircraft tank valve closure of 0.5 of a second. The valve shall reopen when the outlet pressure drops below the set-point of the pilot if the deadman control lever is still depressed.

2.4.8.5 Deadman Control

Deadman shall be pneumatically connected to the pilot system of main valve. Valve shall open when deadman control lever is pressed and shall close valve when the lever is released to bleed air from the hydrant hose truck. On rupture of the deadman hose between outlet of deadman control and main valve pilot system, there shall be no fuel leakage. Main valve shall close in five (5) seconds maximum when deadman is released or when the air sense hose is disconnected.

2.4.8.6 Defuel

Valve shall be capable of reverse flow at the rate of 300 GPM at 165 psig.

2.4.8.7 Speed Control

Valve shall open slowly without affecting the closure rate. Provide

adjustable speed control with a range of two (2) to 30 seconds.

2.4.8.8 Thermal Relief

Valve to open for pressure equalization and return flow when downstream pressure exceeds upstream pressure.

2.4.8.9 Adapter

Valves shall be provided with type adapter as indicated on drawings. Provide metal sealing cover (include vacuum break feature) connected to the adapter. Adapter shall have pressure equalizing feature.

2.4.8.10 Strainer

A 40-mesh stainless steel wire, self-cleaning strainer shall be provided in the pilot valve supply piping.

2.4.8.11 Minimum Differential Pressure Feature

The valve shall be equipped with a minimum differential pressure pilot to maintain a differential pressure across the valve.

2.4.9 Overfill Valve for Product Recovery Tank (OV-1)

2.4.9.1 Size

Two-inch (2").

2.4.9.2 Capacity

50 GPM.

2.4.9.3 Operation

Hydraulically operated overfill valve shall close automatically upon rising to Product Recovery Tank 80 percent fill level. Valve shall open automatically upon falling below Product Recovery Tank 80 percent fill level.

2.4.9.4 Control Float

Automatic opening and closing of the valve shall be initiated by a control float located within the Product Recovery Tank. Control float shall be provided with a manual tester, mounted external to the tank, for testing of overfill valve operation.

2.4.9.5 Pressure Reservoir

Valve shall be provided with a pressure reservoir to supply required hydraulic pressure for operation. Reservoir pressure to be supplied by Fuel Transfer Pump (FTP-1). Valve shall close upon loss of reservoir pressure. Reservoir shall be a one gallon capacity bladder-type tank, ductile iron constructed, tested and stamped in accordance with ASME BPV VIII Div 1 for a working pressure of 125 psi and precharged with air. The tank will be epoxy lined. The tank will be fitted with an air charging valve and pressure gauge.

2.4.9.6 Thermal Relief

Overfill valve shall be provided with a pressure sustaining control valve that shall automatically, upon inlet pressure rising to 200 psig, open allowing thermal relief around overfill valve. Pressure sustaining valve shall automatically close upon inlet pressure dropping below 200 psig.

2.4.9.7 Limit Switch

Limit switch shall be provided with valve for remote indication of valve open or closed position. Valve closed position will become an alarm condition the pump control panel (PCP).

2.4.9.8 Strainer

Pressure reservoir inlet line shall be provided with a shut-off valve, strainer and check valve.

2.4.10 Truck Fill Stand Control Valve (TFV)

2.4.10.1 Quantity

No additional valves are required.

2.4.11 System Integrity Test/Pantograph Flush Control Valve (TCV-1)

Control valve shall be installed off the 8-inch bypass between the hydrant issue and return lines. The test valve outlet shall connect to the issue line downstream of the issue line isolation valve. During the initial stage of a System Integrity Test, the valve will control the downstream hydrant line pressure to a maximum of 125 psig. Also, during standard hydrant operations or pantograph flushing, the valve will be set at 175 PSIG. During hydrant system flush operations, TCV-1 must remain in a closed position to eliminate unwanted back flow.

2.4.11.1 Size

Four (4)inch.

2.4.11.2 Flow

0-600 GPM

2.4.11.3 Operation

Control valve requires two(2)pressure regulating pilots each with solenoid valves to modulate downstream pressure. Valve will be activated during initial stage of System Integrity Test and also during standard hydrant operations or pantograph flushing. Pilot set points shall be adjustable with a range of 30 to 300 PSIG. The System Integrity pilot shall be set at 125 PSIG and the remaining pilot shall be set at 175 psig.

2.4.11.4 Speed Control

Provide separate opening and closing speed controls each adjustable between one (1) and 30 seconds. Factory set at three (3) seconds for opening speed and one (1) second for closing speed.

2.4.12 Pantograph Pressure Control Valve

2.4.12.1 Size

Four-inch (4").

2.4.12.2 Flow

600 GPM under normal conditions.

2.4.12.3 Operation

Control valve shall regulate the maximum pressure at the skin of the aircraft to 50 psig at any flow rate from 50 to 600 GPM. The pressure is to be adjustable within a range of 15 to 75 psig.

2.4.12.4 Quick Closure

Valve shall close quickly when outlet pressure exceeds control set-point. Valve shall limit the surge pressure on the aicraft to a maximum of 120 psig when fueling at 600 GPM during an aircraft tank valve closure of 0.5 seconds. The valve shall reopen when the outlet pressure drops below the set-point of the pilot.

2.4.12.5 Speed Control

Valve shall open slowly without affecting the closure rate. Provide adjustable speed control with a range of two (2) to 30 seconds.

2.4.12.6 Defuel

Valve shall be capable of reverse flow at the rate of 300 GPM at 165 psig.

2.4.12.7 Thermal Relief

Valve to open for pressure equalization and return flow when downstream pressure exceeds upstream pressure.

2.4.12.8 Strainer

A 40-mesh stainless steel wire, self-cleaning strainer shall be provided in the pilot valve supply piping.

PART 3 EXECUTION

3.1 VALVE TESTING AND START-UP SUPPORT

The Contractor shall provide the services of a factory trained and certified service engineer employed by the valve manufacturer to verify that each valve has been properly installed and to verify valves were factory operationally tested, adjusted and set per these specifications. The service engineer shall assist the Contractor in the valve start-up adjustment process and will remain on site until all control valves function as required by the contract documents.

3.1.1 Standard 1-Year Warranty Period

If a problem attributable to the valve's manufacturer or installation

arises after the initial system start-up has been accomplished, and after system final acceptance date, the Contractor shall have 48 hours from the time of notification that a problem exists to solve the problem. The problem shall be solved to the satisfaction of the Contracting Officer, the Base Civil Engineer and/or the Command Fuel Facilities Engineer . If the Contractor cannot effectuate a proper resolution to the problem as outlined above in the 48 hour period, the Contractor shall provide a factory trained engineer from the manufacturer of the valve within 48 hours after the expiration of the Contractor's initial 48 hour period to effectuate a resolution of the problem above. All services provided by the valve manufacturer shall be at no cost to the Government. When it has been determined by the Contractor, Contracting Officer, and the valve manufacturer's representative that the valve(s) cannot be repaired in its installed position in the fuel system, it shall be replaced with a new valve and pilot assembly within 48 hours after the initial 96-hour period listed above expires and at no cost to the Government.

## 3.2 TRAINING

The manufacturer shall conduct two eight- hour training classes for Liquid Fuels Maintenance Technicians which include valve overhaul procedures, pilot overhaul procedures, valve adjustments, and valve diagnostics. The manufacturer shall provide a four-inch (4") valve mock-up with various trim components (i.e., rate of flow, solenoid control, and speed control features) to be used during training. Video taping of training shall be allowed. The four-inch (4") valve mock-up shall become the property of the Government and shall be turned over to the Contracting Officer.

-- End of Section --

SECTION TABLE OF CONTENTS

DIVISION 15 - MECHANICAL

SECTION 15140

PUMPS, FUELING SYSTEM

**04/99; Rev. 12/00**

PART 1 GENERAL

1.1 REFERENCES
1.2 SUBMITTALS
1.2.1 Submittal Sequence
1.3 ELECTRICAL WORK

PART 2 PRODUCTS

2.1 DESIGN CONDITIONS
2.2 FUELING PUMPS (FP-1 through FP-5)
2.2.1 Capacity
2.2.2 General Requirements
2.2.3 Service Nameplate
2.2.4 Identification Nameplate
2.2.5 Exterior Primer Coat
2.2.6 Exterior Topcoat
2.2.7 Motors
2.3 FUEL TRANSFER PUMP (FTP-1)
2.3.1 Capacity
2.3.2 Assembly
2.3.3 Materials
2.3.3.1 Mechanical Seal
2.3.4 Construction
2.3.4.1 Couplings
2.3.4.2 Impeller
2.3.4.3 Wear Rings
2.3.4.4 Shaft
2.3.4.5 Finishing
2.3.4.6 Bearings
2.3.4.7 Drilling and Tapping
2.3.4.8 Baseplate
2.3.4.9 Special Tools
2.3.4.10 Service Nameplate
2.3.4.11 Identification Nameplate
2.3.4.12 Exterior Primer Coat
2.3.4.13 Exterior Topcoat
2.3.5 Motor
2.4 Bulk Fuel Transfer Pumps (BFTP-1 and BFTP-2)
2.4.1 Capacity

PART 3 EXECUTION

3.1 PREPARATION FOR SHIPMENT
3.1.1 Rust Preventative
3.1.2 Closure of Openings

3.1.3 Assembly
3.1.4 Bracing
3.1.5 Vapor Inhibiting Wraps
3.1.6 Shipping Identification
3.2 INSTALLATION
3.2.1 Anchoring
3.2.2 Grouting
3.2.3 Leveling and Aligning
3.2.4 Direct Drives
3.2.4.1 Rotation Direction and Speed
3.2.4.2 End Play
3.2.4.3 Shaft Leveling and Radial Alignment
3.2.4.4 Angular Alignment and End Clearance
3.2.4.5 Final Recheck
3.2.5 Start-up Representative

-- End of Section Table of Contents --

SECTION 15140

PUMPS, FUELING SYSTEM
**04/99; Rev. 12/00**

PART 1 GENERAL

(Waiver to Use MilStds and MilSpecs in Air Force Fuel Projects, HQ AFCESA/CESM (01/29/96))

1.1 REFERENCES

The publications listed below form a part of this specification to the extent referenced. The publications are referred to in the text by basic designation only.

AMERICAN BEARING MANUFACTURERS ASSOCIATION (ABMA)

| | |
|---|---|
| ABMA 7 | (1995) Shaft and Housing Fits for Metric Radial Ball and Roller Bearings (Except Tapered Roller Bearings) Conforming to Basic Boundry Plan |

AMERICAN SOCIETY OF MECHANICAL ENGINEERS (ASME)

| | |
|---|---|
| ASME B16.5 | (1996) Pipe Flanges and Flanged Fittings |

AMERICAN PETROLEUM INSTITUTE (API)

| | |
|---|---|
| API STD 610 | (1995; 8th Edition) Centrifugal Pumps for General Refining Service |

AMERICAN SOCIETY FOR TESTING AND MATERIALS (ASTM)

| | |
|---|---|
| ASTM A 182/A 182M | (1996e) Forged or Rolled Alloy-Steel Pipe Flanges, Forged Fittings and Valves and Parts for High Temperature Service |
| ASTM A 276 | (2000a) Stainless Steel Bars and Shapes |
| ASTM A 356/A 356M | (1998e1) Heavy-Walled, Carbon Low Alloy, and Stainless Steel Castings or Steam Turbines |
| ASTM A 487/A 487M | (1993; R1998) Steel Casing for Pressure Service |
| ASTM A 582/A 582M | (1995b) Free-Machining Stainless Steel Bars |
| ASTM A 743/A 743M | (1995) Castings, Iron-Chromium, Iron-Chromium-Nickel, Corrosion Resistant, for General Application |
| ASTM C 827 | (1995a; R1997 e1) Standard Test Method |

| | |
|---|---|
| | for Change in Height at Early Ages of Cylindrical Specimens from Cementitious Mixtures |
| HYDRAULIC INSTITUTE (HI) | |
| HI-01 | (1983; 14th Ed.) Standard for Centrifugal, Rotary, and Standard Reciprocating Pumps |
| INSTITUTE OF ELECTRICAL AND ELECTRONICS ENGINEERS (IEEE) | |
| IEEE Std 112 | (1996) Test Procedure for Polyphase Induction Motors and Generators |
| MILITARY SPECIFICATIONS (MS) | |
| MS MIL-P-24441 | (1991; Rev. B, Supp. 1) Paint Epoxy - Polyamide, General Specification for |
| NATIONAL ELECTRICAL MANUFACTURERS ASSOCIATION (NEMA) | |
| NEMA MG 1 | (1998; Rev 1) Motors and Generators |
| NATIONAL FIRE PROTECTION AGENCY (NFPA) | |
| NFPA 70 | (2002) National Electrical Code |
| STEEL STRUCTURES PAINTING COUNCIL (SSPC) | |
| SSPC PA 1 | (2000) Shop, Field, and Maintenance Painting of Steel |
| SSPC SP 10 | (2000) White Metal Blast Cleaning |

## 1.2 SUBMITTALS

Government approval is required for submittals with a "G" designation; submittals not having a "G" designation are for information only. When used, a designation following the "G" designation identifies the office that will review the submittal for the Government. The following shall be submitted in accordance with Section 01330 SUBMITTAL PROCEDURES:

SD-02 Shop Drawings

Fueling Pumps (FP-1 through FP-5); G-AE.

Fuel Transfer Pump (FTP-1); G-AE.

Bulk Fuel Transfer Pumps (BFTP-1 and BFTP-2); G-AE.

SD-03 Product Data

Fueling Pumps (FP-1 through FP-5); G-AE.

Fuel Transfer Pump (FTP-1); G-AE.

Bulk Fuel Transfer Pumps (BFTP-1 and BFTP-2); G-AE.

SD-06 Test Reports

Certified Test Curves

Hydrostatic, performance, and NPSH tests shall be conducted at the factory on each pump in accord with Hydraulic Institute Standard for Centrifugal, Rotary and Reciprocating Pumps. Test each pump with the actual motor which will drive the pump in the field. Test reports shall bear the serial number of both pump and driver. Submit manufacturer's certified reports of hydrostatic, performance, and NPSH tests. Submit manufacturer's certified test curve. All tests shall be observed by the Contracting Officer or his designated representative. The Contractor shall give the Contracting Office 21 days notice prior to conductance of factory tests in order to schedule observing of factory test.

SD-07 Certificates

Fueling Pumps (FP-1 through FP-5); G-AE.

Fuel Transfer Pump (FTP-1); G-AE.

Bulk Fuel Transfer Pumps (BFTP-1 and BFTP-2); G-AE.

SD-10 Operation and Maintenance Data

Operation and Maintenance Manuals; G-AE.

Operation and maintenance information shall be submitted for the pumps and appurtenance specified herein. Refer to Section 01730 FACILITY OPERATION AND MAINTENANCE MANUAL for the information to be submitted.

1.2.1 Submittal Sequence

Performance testing shall not occur prior to acceptance of shop drawing submittal.

1.3 ELECTRICAL WORK

Motors, manual or automatic motor control equipment except where installed in motor control centers, and protective or signal devices required for the operation specified herein shall be provided under this section in accordance with Section 16415A ELECTRICAL WORK, INTERIOR. Any wiring required for the operation specified herein, but not shown on the electrical plans, shall be provided under this section in accordance with Section 16415A ELECTRICAL WORK, INTERIOR. Motors shall be high efficiency type and in accordance with Section 16415A ELECTRICAL WORK, INTERIOR.

PART 2 PRODUCTS

2.1 DESIGN CONDITIONS

Shall be as specified in Section 15050 MECHANICAL EQUIPMENT, FUEL SYSTEM.

## 2.2 FUELING PUMPS (FP-1 through FP-5)

### 2.2.1 Capacity

Capacity shall be 600 gpm against a total head of 599 feet when driven at 3600 rpm. Overall efficiency at design conditions of pump and driver, connected, shall be minimum of 68 percent. Pump head capacity shall be continually rising and shall be free of dips and valleys from design point to shut-off head. Pump shut-off head shall have a 10 percent to 20 percent head rise to shut off. Pump shall be capable of at least a 10 percent head increase at rated conditions by installing a new impeller. Pumps shall not overheat or be damaged in any way while operating continuously at a minimum flow condition of 150 gpm and continuously at a maximum flow condition of 125 percent required capacity GPM. The unit will also be required to operate at a flow of 12.5 percent required capacity GPM without exceeding the vibration limits given in API STD 610. These pumps are for parallel operation and shall have equal head at minimum continuous stable flow, plus or minus 2 percent.

### 2.2.2 General Requirements

a. The pumps for this service shall meet the requirements of API STD 610, latest edition. Whenever the information contained herein conflicts with said standard, the information here in shall govern. The pumps for this service shall run at a nominal 3600 rpm and shall be single stage centrifugals, horizontally mounted, vertical or radial split case, enclosed impeller, with end suction and top vertical discharge. Pumps shall be of the back pull-out design to permit removing case half from rear for access to internal parts without disturbing the suction or discharge piping or the driver. All parts shall be factory inspected so that parts are interchangeable. Pumps and motors shall be furnished as complete units as herein specified. Pump assembly shall be statically and dynamically balanced for all flow rates from no flow to 120 percent of design flow.

b. The pump shall require no more than 15-feet of net positive suction head (NPSHR) when it is operated with water at a capacity of 600 gpm at rated head and speed. A hydrocarbon reduction or correction factor shall not be used. Pump suction specific speed shall be less than 12,000.

c. The pump shall be horizontal, single stage, single suction with double volute construction to assure radial balance. It shall be designed to permit removal of the impeller, shaft, bearings and bearing housing as an assembly, without disconnecting the suction or discharge piping.

d. The pump case shall be end suction, centerline discharge type for ease of piping alignment. Flange ratings shall be class 300-pound per ASME B16.5. The case shall be designed for maximum discharge pressure at pumping temperature but not less than 550 psig, with a minimum corrosion allowance of 1/8-inch. The suction and discharge flanges as well as the cover bolting surfaces shall be backfaced or spotfaced for positive bolt seating. The radial case to cover split shall be a metal-to-metal fit with a confined, controlled compression gasket.

e. The pump cover shall contain a stuffing box designed to accept an unbalanced mechanical seal. The stuffing box shall have a minimum of three-inch studs for seal gland bolting. The gasket fit for seal gland to stuffing box shall be of the controlled compression type with metal-to-metal joint contact.

f. Both case and cover are to be fitted with renewable wear rings.

g. The impeller shall be of the enclosed type, dynamically and hydraulically balanced. It shall be key driven, held in place by a positive lock, threaded against rotation. The running clearance between the impeller and case-cover wear rings shall be no less than .018-inches.

h. Mechanical Seal. A single unbalanced mechanical seal per API STD 610 code USTFM of multiple spring design shall be supplied. The seal gland shall be tapped for three connections and each shall be stamped for identification as follows: Q for quench; F for flush; and D for drain. A non-sparking throttle bushing pressed into the seal end plate against an outside shoulder shall be provided to minimize leakage on complete seal failure.

i. Bearing Housing. Oil lubricated anti-friction, radial and thrust bearings of standard design shall be supplied. The bearings shall be selected to give a minimum L-10 rating life of 25,000 hours in continuous operation. Bearings shall be retained on the shaft and fitted into housings in accordance with ABMA 7. Locking of the ball thrust bearing to the shaft shall be by series W tank type washer. Minimum spacing between bearing centerlines shall be 6.5-inches.

j. A sight glass for checking oil level with a permanent indication of proper oil level shall be supplied.

k. Bearing housings shall be equipped with labyrinth type end seals and deflectors where the shaft passes through the housing; lip-type seals shall not be used. Deflectors shall be made of non-sparking material. The deflector design shall effectively retain oil in the housing and prevent entry of foreign material into the housing.

l. Shafts shall be of ample size to transmit the maximum torque required under specified operating conditions, and to withstand continuously all stresses resulting from supported weights, thrusts and starting, including across-the-line motor starting. It shall be key seated to provide positive drive for the coupling, shaft sleeve and impeller. The shaft stiffness factor shall be under 70. The radial bearing centerline to impeller centerline, distance and the pump shaft diameter under the sleeve shall be provided to calculate the factor.

m. A replaceable hooked-type shaft sleeve, locked in place by the impeller shall extend under the mechanical seal and gland.

n. A spacer coupling shall be supplied. The spacer length shall permit the removal of the assembled pullout element without disturbing the driver or the suction and discharge piping. Couplings shall be properly keyed in place. Cylindrical fits shall be light enough to permit easy removal of the hub in the field without the need for heating. A service factor of at least 1.5 shall be used in selecting couplings based on manufacturer's ratings.

o. Removable coupling guards of the non-sparking type shall be supplied. They shall comply with the requirements of OSHA.

p. Total indicated shaft runout at coupling end shall be 0.001-inches or less. Total shaft deflection shall be no more than 0.002-inches at face of stuffing box.

q. Baseplate. The baseplate shall be of fabricated steel construction. It shall be of the drain pan style, sloping from back to front. Connections for a drain shall be tapped (1-inch minimum) at the pump end and located to accomplish complete drainage. A grout hole of at least 8-inches minimum diameter shall be supplied and shall have 1/2-inch minimum raised lip edge.

r. Materials. No zinc, brass, bronze or other copper bearing alloy shall come in contact with the fuel.

s. The case and cover shall be constructed of stainless steel ASTM A 487/A 487M GR CF8M or ASTM A 487/A 487M GR CA6NM or aluminum ASTM A 356/A 356M GR T6.

t. Impeller material shall be stainless steel ASTM A 487/A 487M GR CF8M or ASTM A 743/A 743M CA 6NM.

u. Wear rings shall be stainless steel ASTM A 182/A 182M GR F6 or ASTM A 276 TP410 or 416.

v. Shaft shall be stainless steel ASTM A 276 type 410 or 416 or ASTM A 582/A 582M Type 410 or 416 with renewable shaft sleeve of ASTM A 276 type 316L with hard facing under mechanical seal gasket.

w. Testing. All shop testing shall be performed in accordance with the HI-01.

2.2.3 Service Nameplate

A pump service nameplate, of type 18-8 stainless steel or monel, attached by stainless steel pins at an accessible point on the pump, shall be furnished in addition to the identification nameplate. The pump service nameplate shall be stamped with the following information:

Manufacturer's name
Serial number of pump
Capacity, gpm
Pumping head, ft.
Maximum specific gravity of fluid to be pumped
Revolutions per minute
Horsepower of driver

2.2.4 Identification Nameplate

A pump identification nameplate of Type 18-8 stainless steel or monel shall be provided and securely attached by stainless steel pins to a conspicuous place on the pump head. Tagging in letters 1/4-inch high shall bear the equipment number as shown on the drawings.

2.2.5 Exterior Primer Coat

Exterior surfaces of the baseplate shall be primed by the manufacturer. Coating shall be applied meeting requirements of SSPC PA 1. Surface cleaning shall meet requirements of SSPC SP 10. Metal primer shall be zinc rich paint conforming to specification MS MIL-P-24441, Type 1, Class 3. Dry film thickness shall be 2 to 4 mils.

2.2.6 Exterior Topcoat

Manufacturer's standard exterior topcoat shall be applied at factory to the base plate.

2.2.7 Motors

a. Motor shall be furnished by the pump manufacturer and shall be suitable for the environment and operating conditions to which it will be subjected. Provide space heaters suitable for operation on 460 or 120 volts as indicated on the drawings within the motor enclosure to prevent moisture condensation after shut-down. Motor shall be UL listed for use in Class I, Division 1, Group D hazardous areas, and shall have a maximum temperature rating of "T3 - 392 degrees F" as defined by NFPA 70. The motor nameplate shall include the temperature rating of the motor and locked-rotor indicating code letters in accordance with NFPA 70, Table 430-7(b).

b. Voltage rating shall be 460 volts, 3 phase, 60HZ. Motor nominal speed shall match pump. Motors shall be capable of delivering rated horsepower output successfully and continuously under conditions of voltage variations of 10% above or below rated voltage. Motors shall include a 1.15 service factor.

c. Pump manufacturer shall assure the specified output and proper operation of the pump without being overloaded at unity service factor when operating at any point on the pump performance curve. In addition to having sufficient horsepower-output rating at rated speed, motor shall have performance characteristics which will allow, without injurious overheating of the motor, accelerating the load from standstill to rated speed under conditions of ten (10) starts per hour. Attention is specifically directed to the fact that thermal characteristics of motors with regard to capability for accelerating the load may vary greatly from motor manufacturer to motor manufacturer, notwithstanding that the horsepower rating may be the same. It is the pump manufacturer's responsibility to provide motors with adequate thermal starting characteristics as well as adequate rated-speed operating characteristics. Service factors shall conform with NEMA standards; however, service factors are only applicable at rated nameplate voltage and frequency. Since all system voltages are subject to variation, service factors above unity shall not be applied in sizing motor.

d. Motor shall be squirrel-cage induction type. Motor shall be NEMA Design B (normal-torque, low starting current).

e. Motor insulation shall be non-hydroscopic, NEMA Class H, 180 degrees C for motors over 10 hp and NEMA Class F, 150 degrees C for 10 hp and smaller. Stator windings shall be epoxy impregnated. The impregnations shall be applied by the vacuum and pressure process.

f. Winding temperature rise, (based on a maximum ambient temperature of 40 degrees C at 3300-feet altitude) shall not exceed 80 degrees C.

g. Bearings shall be ABMA minimum L10 life of 60,000 hours or L50 life of 300,000 hours suitable for the size, type, and application when the pump is operating at the specified flow and head.

h. Motor enclosures shall be totally enclosed, weather sealed, fan cooled, explosion-proof and shall be listed and labeled for Class I, Group

D areas. Provide bronze ground bolt on motor enclosure. All motor external electrical connections shall be terminated within a single terminal housing.

i. The dynamic balance, overspeed withstand capability, and sound power levels of the motor shall conform with NEMA standard requirements.

j. The pump manufacturer shall furnish the Contracting Officer with the recommended minimum run time for the motor.

k. Pump motor shall be provided with temperature limiting thermostats within the motor frame when required to meet Class I, Group D requirements.

l. Pump motor shall be furnished with lifting lugs on the motor casing.

m. Unless indicated otherwise, motors for conventional applications over 15 horsepower shall be the energy efficient type. This requirement is not applicable to hermetically sealed motors, integrally mounted motors, motors specified as part of energy efficient equipment, wound rotor motors, or any application involving special construction or performance. Guaranteed minimum full load efficiencies shall be (based on 1800 rpm, open drip proof):

| | | | |
|---|---|---|---|
| 20 hp | 92.0% | 75 hp | 95.5% |
| 25 hp | 92.0% | 100 hp | 93.5% |
| 30 hp | 92.0% | 125 hp | 94.5% |
| 40 hp | 92.0% | 150 hp | 94.5% |
| 50 hp | 92.5% | 200 hp | 94.5% |
| 60 hp | 92.5% | 600 hp | 94.5% |

n. Other motors of different speed or housing classification shall also be of the energy efficient type, as advertised by the motor manufacturer, with efficiency greater than the standard line. Motor efficiencies shall have been verified in accordance with NEMA MG 1, 12.53.a., and determined using the dynamometer method as described in IEEE Std 112, Method B. All shop drawing submittals on motor driven equipment shall include the motor efficiency.

## 2.3 FUEL TRANSFER PUMP (FTP-1)

### 2.3.1 Capacity

Capacity shall be 50 gpm against a total head of 191 feet when driven at 1800 rpm. Overall efficiency at design conditions of pump and driver, connected, shall be minimum 65 percent. Pump head capacity shall be continually rising and shall be free of dips and valleys from design point to shut-off head. Pump shall be capable of at least 10% head increase at rated conditions by installing a new impeller.

### 2.3.2 Assembly

The pump for this service shall meet the requirements of \-API STD 610-\, latest edition. Wherever the information contained herein conflicts with said standard, the information herein shall govern. The pump for this service shall run at a nominal 1800 rpm and shall be a multi-stage, vertical turbine pump. Pump and motor shall be furnished as a complete unit as herein specified. Pump assembly shall be statically and

dynamically balanced for all flow rates from no flow to 120 percent of design flow.

2.3.3 Materials

The materials of construction for the pump shaft shall be stainless steel. All other materials shall be of non-corrosion materials.

2.3.3.1 Mechanical Seal

Balanced type.

2.3.4 Construction

Castings used for any part of pumps shall be sound and free of shrink or blow holes, scale, blisters, and other similar casting defects. The surfaces of casting shall be cleaned by sand or shot blasting, pickling, or other standard methods used by the manufacturer. All mold parting fins and remains of gates and risers shall be either chipped, filed, or ground flush with the surface of the casting. The repair of casting leaks and defects by peening or by the use of cement compounds is prohibited.

2.3.4.1 Couplings

Couplings shall be flexible and self-aligning. The couplings shall be of the spacer-type with a spacer of sufficient length to permit replacement of the mechanical seal assembly without removing the motor. The pump half coupling shall be of such design that it can be removed without the use of heat. Coupling halves shall fit tightly to the shafts of the pump and the driver so as not to become loose during operation. The coupling shall be provided with an OSHA approved coupling guard.

2.3.4.2 Impeller

Impeller shall be keyed to the shaft for radial loads and fixed in the axial position by shaft sleeve nuts, or other positive positioning device. Impellers shall be held to the shaft so that the impeller will not become loose should the pump accidentally rotate in reverse direction. The impeller shall be statically and dynamically balanced and be provided with anti-reversing rachet.

2.3.4.3 Wear Rings

Renewable wearing rings shall be positively locked on the impeller. Wearing rings shall fit with close tolerances so as to permit a minimum of recirculation. Positive locking case wearing rings shall be provided so that the case wearing rings will not rotate or change position in the case.

2.3.4.4 Shaft

Shaft shall be designed with a high safety factor to easily withstand the torsional loads and other stresses to which it may be subjected. It shall be so designed that there will be no detrimental vibration stresses. Surfaces shall be ground to accurate dimensions. Shaft deflection shall be limited to 0.0020-inch maximum when measured at the face of the mechanical seal under the operating condition of zero flow at shut off head. Shaft shall be protected through the mechanical seal by means of a shaft sleeve. Seal piping from the discharge to the mechanical seal shall be provided.

2.3.4.5 Finishing

Passageways and impellers shall be finished to permit maximum efficiency and provide noise reduction. Overall sound levels shall not exceed OSHA limits.

2.3.4.6 Bearings

Bearings shall be product-lubricated. Heavy duty ballbearings with a high safety factor shall be provided. Provide double row thrust bearing to handle thrust and limit end play and provide graphite alloy throat bushing to assist in maintaining shaft alignment and to prevent contaminants from entering the mechanical seal area.

2.3.4.7 Drilling and Tapping

Casting shall be drilled and tapped for drain and seal recirculation lines. All connections shall be provided with plugs.

2.3.4.8 Baseplate

Baseplate shall be suitable for pedestal mounting. Anchor bolt holes shall be 7/8-inch diameter.

2.3.4.9 Special Tools

Pumps shall be furnished with special tools necessary to dismantle and reassemble the unit.

2.3.4.10 Service Nameplate

A pump service nameplate, of type 18-8 stainless steel or monel, securely attached by stainless steel pins at an easily accessible point on the pump, shall be furnished in addition to the identification nameplate. The pump service nameplate shall be stamped with the following information:

Manufacturer's name
Serial number of pump
Capacity, gpm
Pumping head, ft.
Maximum specific gravity of fluid to be pumped
Revolutions per minute
Horsepower of driver

2.3.4.11 Identification Nameplate

A pump identification nameplate of Type 18-8 stainless steel or monel shall be provided and securely attached by stainless steel pins to a conspicuous place on the pump head. Tagging in letters 1/4-inch high shall be the equipment number as shown on the drawings.

2.3.4.12 Exterior Primer Coat

Exterior surfaces of the pump and baseplate shall be primed by the manufacturer. Surface cleaning shall meet requirements of SSPC SP 10. Metal primer shall be zinc rich paint conforming to specification \-MS MIL-P-24441-\ Type 1, Class 3. Dry film thickness shall be 2 to 4 mils.

2.3.4.13 Exterior Topcoat

Manufacturer's standard exterior topcoat shall be factory applied and shall be white.

2.3.5 Motor

Refer to paragraph, Motors for the Fueling Pumps.

2.4 Bulk Fuel Transfer Pumps (BFTP-1 and BFTP-2)

2.4.1 Capacity

The capacity shall be 600 gpm against a total head of 128 feet when driven at 3600 rpm. Overall efficiency at design conditions of pump and driver, connected, shall be a minimum of 70 percent. All other general requirements must match the specifications given for the hydrant fueling pumps (FP-1 through FP-5) in paragraphs 2.2.1 through 2.2.7.

PART 3 EXECUTION

3.1 PREPARATION FOR SHIPMENT

3.1.1 Rust Preventative

Exterior machine surfaces shall be coated with a rust preventative. Pumps shall be disassembled after the shop running tests and inspected, and internal parts shall be coated with a rust preventative before reassembling.

3.1.2 Closure of Openings

Threaded openings shall be provided with metallic plugs or caps. Flanges shall be gasketed with rubber and closed with 3/16-inch thick plate of the same outside diameter as the match flange. A minimum of four full-diameter bolts shall hold closure in place.

3.1.3 Assembly

Pumps shall be shipped assembled or a field service engineer shall be furnished to supervise the field assembly at no additional cost to the Government.

3.1.4 Bracing

Each unit shall be suitably prepared for shipment, supported and braced, with auxiliary equipment secured to prevent damage during shipment.

3.1.5 Vapor Inhibiting Wraps

Exposed shafts and shaft couplings shall be wrapped with waterproof moldable waxed cloth or vapor inhibitor paper. The seams shall be sealed with adhesive tape.

3.1.6 Shipping Identification

Each pump shall be identified with a metal tag showing the item number. Material shipped separately shall be marked with a metal tag indicating the

item number for which it is intended.

## 3.2 INSTALLATION

Install equipment and components true to line, level and plumb, and measured from established benchmarks or reference points. Follow manufacturer's recommended practices for equipment installation. Provide required clearances between equipment components. Equipment, apparatus, and accessories requiring normal servicing or maintenance shall be easily accessible.

### 3.2.1 Anchoring

Anchor equipment in place as indicated on the drawings or per manufacturer's recommendations. Check alignment of anchor bolts and/or bolt holes before installing equipment and clean-out associated sleeves. Do not cut bolts due to misalignment. Notify the Contracting Officer of errors and obtain the Contracting Officer's acceptance before proceeding with corrections. Cut anchor bolts of excess length to the appropriate length without damage to threads.

### 3.2.2 Grouting

Equipment which is anchored to a pad shall be grouted in place. Before setting equipment in place and before placing grout, clean surfaces to be in contact with grout, including fasteners and sleeves. Remove standing water, debris, oil, rust, coatings and other materials which impair bond. Clean contaminated concrete by grinding. Clean metal surfaces of mill scale and rust by hand or power tool methods. Provide formwork for placing and retaining grout. Grout to be non-metallic, non-shrink, fluid precision grout of a hydraulic cementitious system with graded and processed silica aggregate, portland cement, shrinkage compensating agents, plasticizing and water reducing agents; free of aluminum powder agents, oxidizing agents and inorganic accelerators, including chlorides; proportioned, pre-mixed and packaged at factory with only the addition of water required at the project site. Grouting to meet requirements of ASTM C 827. Perform all grouting in accord with equipment manufacturer's and grout manufacturer's published specifications and recommendations.

### 3.2.3 Leveling and Aligning

Level and align equipment in accord with respective manufacturer's published data. Do not use anchor bolt, jack-nuts or wedges to support, level or align equipment. Install only flat shims for leveling equipment. Place shims to fully support equipment. Wedging is not permitted. Shims to be fabricated flat carbon steel units of surface configuration and area not less than equipment bearing surface. Shims to provide for full equipment support. Shim to have smooth surfaces and edges, free from burrs and slivers. Flame or electrode cut edges not acceptable.

### 3.2.4 Direct Drives

Alignment procedure follows.

#### 3.2.4.1 Rotation Direction and Speed

Check and correct drive shaft rotation direction and speed.

3.2.4.2 End Play

Run drive shafts at operational speed. Determine whether axial end play exists. Run drive shaft at operational speed and mark drive shaft axial position when end play exists. Block drive shaft in operating position when aligning drive shaft with driven shaft.

3.2.4.3 Shaft Leveling and Radial Alignment

Check shaft leveling by placing a straightedge across the two coupling half faces in both horizontal and vertical planes.

3.2.4.4 Angular Alignment and End Clearance

Check angular alignment and en clearance by inserting a feeler gage at 4 points, 90 degrees apart around outer edges of coupling halves.

3.2.4.5 Final Recheck

Check adjustments with dial indicator after completing recheck. Align shafts within 0.002-inch tolerance, except as otherwise required by more stringent requirements of equipment manufacturer.

3.2.5 Start-up Representative

A manufacturer's field service representative shall be provided at no additional cost to the Government to check the pumps for proper operation prior to start-up and also to witness as a minimum the first two days of operation. Any additional time required due to delays or corrections by the Contractor shall be provided at no additional cost to the Government. The manufacturer's field service representative shall also instruct the required personnel in the proper operation and maintenance of the pumps.

-- End of Section --

SECTION TABLE OF CONTENTS

DIVISION 15 - MECHANICAL

SECTION 15176

FUEL STORAGE TANK AND COMPONENTS

**02\93**

PART 1 GENERAL

1.1 REFERENCES
1.2 SYSTEM DESCRIPTION
1.3 SUBMITTALS
1.4 QUALIFICATIONS
1.4.1 Experience
1.4.1.1 Installation Contractor
1.4.1.2 Design Engineering Contractor
1.4.2 Welding
1.4.3 Radiographic Inspections
1.5 REGULATORY REQUIREMENTS
1.5.1 Codes
1.5.2 Permits
1.6 SAFETY REQUIREMENTS
1.7 DELIVERY, STORAGE, AND HANDLING
1.8 PROJECT/SITE CONDITIONS
1.8.1 Verification of Dimensions
1.8.2 Testing and Flushing

PART 2 PRODUCTS

2.1 STANDARD PRODUCTS
2.2 NAMEPLATES
2.3 MATERIALS
2.3.1 Fuels
2.3.1.1 JP-8
2.3.2 Gaskets
2.3.2.1 Nitrile Butadiene (Buna-N)
2.3.2.2 Acrylonitrile Butadiene Rubber (NBR)
2.3.3 Structural Steel Shapes
2.3.4 Bolts
2.3.5 Bird Screens
2.4 STORAGE TANKS
2.4.1 Aluminum
2.4.2 Carbon Steel
2.4.3 Stainless Steel
2.5 PARAGRAPH NOT USED
2.6 STORAGE TANK COMPONENTS
2.6.1 Sand Cushion
2.6.2 Floating Pan
2.6.2.1 Pan Integrity
2.6.2.2 Joint Connections
2.6.2.3 Aluminum Extrusions
2.6.2.4 Aluminum Sandwich Panels
2.6.2.5 Support Legs

2.6.2.6 Periphery Seals
2.6.2.7 Penetration Seals
2.6.2.8 Manway
2.6.2.9 Paragraph not used.
2.6.2.10 Grounding Cables
2.6.2.11 Anti-Rotation Cable
2.6.2.12 Fire Test
2.6.3 Access Ladder
2.6.3.1 Welding Process
2.6.3.2 Welding Electrodes
2.6.4 Shell Manhole
2.6.5 Fixed Roof
2.6.6 Roof Manway
2.6.7 Roof Inspection Hatch
2.6.8 Emergency Overflow Slot
2.6.9 Circulation Vent
2.6.10 Stairway
2.6.11 Handrails
2.6.12 Interior Tank Coating
2.6.13 Exterior Tank Coating
2.6.14 Foundation Ring Wall Mastic Seal
2.6.15 Water Draw-Off System
2.6.16 Level Alarm System
2.6.17 Mechanical Tape Level Gauge
2.6.18 Automatic Tank Gauge
2.7 PIPING COMPONENTS
2.7.1 Fill and Withdrawal Piping
2.7.2 Water Draw-Off Piping
2.7.3 Monitoring Well Piping
2.7.4 PVC
2.7.5 Pipe Supports
2.7.5.1 Exterior to Tanks
2.7.5.2 Interior to Tanks
2.8 SUPPLEMENTAL COMPONENTS/SERVICES
2.8.1 Earthwork
2.8.2 Cathodic Protection
2.8.3 Exterior Coatings for Miscellaneous Items
2.8.4 Identification Markings
2.8.5 Concrete
2.8.6 Flexible Membrane Liner

PART 3 EXECUTION

3.1 INSTALLATION
3.1.1 Sand Cushion
3.1.2 Storage Tank
3.1.2.1 Outer Shell
3.1.2.2 Bottom
3.1.2.3 Defect Removal
3.1.2.4 Welding Procedures
3.1.2.5 Floor and Roof Welded Appurtenance Connections
3.1.3 Floating Pan
3.2 TESTS
3.2.1 Sand Cushion Tests
3.2.2 Storage Tank Tests
3.2.2.1 Paragraph not used.
3.2.2.2 Liquid Penetrant
3.2.2.3 Water Fill Tightness
3.2.2.4 Tank Fuel Fill Tightness

3.2.3 Floating Pan Tests
3.3 INSPECTIONS
3.3.1 Storage Tank
3.3.1.1 Visual Inspection of Welds
3.3.1.2 Radiographic Inspections
3.4 CLEANING AND ADJUSTING
3.4.1 Tank Interior
3.4.2 Tank Calibration
3.4.2.1 Tank Strapping
3.4.2.2 Gauge Table
3.4.3 Final Adjustments

-- End of Section Table of Contents --

SECTION 15176

FUEL STORAGE TANK AND COMPONENTS

**02\93**

PART 1 GENERAL

1.1 REFERENCES

The publications listed below form a part of this specification to the extent referenced. The publications are referred to in the text by basic designation only.

AMERICAN PETROLEUM INSTITUTE (API)

| | |
|---|---|
| API Std 650 | (1998; Addenda 1; Addenda 2; Addenda 3) Welded Steel Tanks for Oil Storage |
| API Std 2000 | (1992) Venting Atmospheric and Low Pressure Storage Tanks: Nonrefrigerated and Refrigerated |
| API Std 2550 | (1965; R 1992) Measurement and Calibration of Upright Cylindrical Tanks |

AMERICAN SOCIETY FOR TESTING AND MATERIALS (ASTM)

| | |
|---|---|
| ASTM A 36 | (1996) Carbon Structural Steel |
| ASTM A 131 | (1989) Structural Steel for Ships |
| ASTM A 176 | (1994) Stainless and Heat-Resisting Chromium Steel Plate, Sheet, and Strip |
| ASTM A 193 | (1996) Alloy-Steel and Stainless Steel Bolting Materials for High-Temperature Service |
| ASTM A 240 | (1996) Heat-Resisting Chromium and Chromium-Nickel Stainless Steel Plate, Sheet, and Strip for Pressure Vessels |
| ASTM A 283 | (1993a) Low and Intermediate Tensile Strength Carbon Steel Plates |
| ASTM A 285 | (1990) Pressure Vessel Plates, Carbon Steel, Low- and Intermediate-Tensile Strength |
| ASTM A 307 | (2000) Carbon Steel Bolts and Studs, 60 000 psi Tensile Strength |

| | |
|---|---|
| ASTM A 325 | (2000) Structural Bolts, Steel, Heat Treated, 120/105 ksi Minimum Tensile Strength |
| ASTM A 492 | (1995) Stainless and Heat-Resisting Steel Rope Wire |
| ASTM B 62 | (1993) Composition Bronze or Ounce Metal Castings |
| ASTM B 209 | (2000) Aluminum and Aluminum-Alloy Sheet and Plate |
| ASTM B 221 | (2000) Aluminum and Aluminum-Alloy Extruded Bars, Rods, Wire, Profiles, and Tubes |
| ASTM B 241 | (1995a) Aluminum and Aluminum-Alloy Seamless Pipe and Seamless Extruded Tube |
| ASTM B 247 | (1995a) Aluminum and Aluminum-Alloy Die Forgings, Hand Forgings, and Rolled Ring Forgings |
| ASTM B 345 | (1995) Aluminum and Aluminum-Alloy Seamless Pipe and Seamless Extruded Tube for Gas and Oil Transmission and Distribution Piping Systems |
| ASTM D 3453 | (1991) Flexible Cellular Materials - Urethane for Furniture and Automotive Cushions, Bedding, and Similar Applications |

ASME International (ASME)

| | |
|---|---|
| ASME BPV IX | (1998) Boiler and Pressure Vessel Code; Section IX, Welding and Brazing Qualifications |
| ASME B31.3 | (1996) Chemical Plant and Petroleum Refinery Piping |

MANUFACTURERS STANDARDIZATION SOCIETY OF THE VALVE AND FITTINGS INDUSTRY (MSS)

| | |
|---|---|
| MSS SP-58 | (1993) Pipe Hangers and Supports-Materials, Design and Manufacture |
| MSS SP-69 | (1996) Pipe Hanger and Supports-Selection and Application |

MILITARY SPECIFICATIONS (MS)

| | |
|---|---|
| MS MIL-DTL-83133 | (Rev E) Turbine Fuel, Aviation, Kerosene Types, NATO F-34 (JP-8), NATO F-35 and JP-8+100 |

NATIONAL FIRE PROTECTION ASSOCIATION (NFPA)

| | |
|---|---|
| NFPA 30 | (1993) Flammable and Combustible Liquids |

SOCIETY OF AUTOMOTIVE ENGINEERS (SAE)

| | |
|---|---|
| SAE AMS 3275 | (1994) Acrylonitrile Butadiene (NBR) Rubber Sheet, Non-Asbestos Fiber Fuel and Oil Resistant |

SSPC: THE SOCIETY FOR PROTECTIVE COATINGS (SSPC)

| | |
|---|---|
| SSPC SP 6 | (1994) Commercial Blast Cleaning |

## 1.2 SYSTEM DESCRIPTION

This specification provides the requirements for the construction and installation of field-fabricated steel storage tank roof and aluminum honeycomb style floating pan with indicated accessories. The two operating tanks (#1 and #2) must first have their existing geodesic domes and internal carbon steel floating roofs removed and scrapped. In addition to construction of new cone roofs and aluminum floating pans, the two tanks are to have their 24-inch diameter manways increased to 36-inch diameter; a third 36-inch manway is to be installed above the aluminum floating pan; the 8-inch suction nozzle and associated withdrawal piping are to be replaced with a 16-inch nozzle and corresponding internal withdrawal piping. In addition, modifications to the existing stairs, replacement of the upper landing and installation of new intermediate landings are required in addition to a new roof safety handrail. Tank #2 has an existing upper intermediate landing that does not require modification. All tank standard accessories shall be included.

All six (6) tanks including bulk storage tanks #3 to #6 require a new low level alarm (LLA). The low level alarm will require one-inch threaded half couplings to first be welded into the existing tank shell walls.

The two operating tanks (#1 and #2) are the only tanks that are to receive new gauge tables.

## 1.3 SUBMITTALS

Government approval is required for submittals with a "G" designation; submittals not having a "G" designation are for information only. When used, a designation following the "G" designation identifies the office that will review the submittal for the Government. The following shall be submitted in accordance with Section 01330 SUBMITTAL PROCEDURES:

SD-01 Preconstruction Submittals

Welding; G-AO.

A letter, at least 5 working days in advance of any welding tests, advising the Contracting Officer of the tests.

Welding and hot work permits obtained from the Base Fire Department.

Tests; G-AO.

A letter, at least 10 working days in advance of each test, advising the Contracting Officer of the date proposed date for each individual test.

Inspections; G-AO.

A letter, at least 10 working days in advance of each inspection, advising the Contracting Officer of the date proposed date for each individual inspection.

SD-02 Shop Drawings

Fuel Storage System; G-AE.

Detail drawings shall be full size folded blue lines, with the title block visible. Alternative materials, dimensions, methods or departures from the Contract Drawings shall be clearly stated and be labeled as exceptions. The drawings shall include the following:

a. Tank roof and floating pan erection details showing dimensions, sizes, thickness, gauges, materials, finishes, and erection procedures.

b. Operating tank component details to include as a minimum:

(1) Floating pan (including details of support legs, manways, joint attachments, anti-rotation cable, and grounding cables)

(2) New internal pipe and fittings

(3) Locations of floating pan pressure/vacuum vents, and rim seals

(4) Railings and Internal Ladder

(5) Location of alarm and control switches

(6) Location of gauges

SD-03 Product Data

Fuel Storage System; G-AE.

Manufacturer's standard catalog data, prior to the purchase or installation of the particular component, shall be highlighted to show brand name, model number, size, options, performance charts and curves, etc. in sufficient detail to demonstrate compliance with contract requirements on all parts and equipment including storage tanks, storage tank components, and piping components.

Spare Parts Data; .

Spare parts data for each different item of equipment specified, after approval of detail drawings and not later than 1 month prior to the date of beneficial occupancy. The data shall include a complete list of parts and supplies, with current unit prices and source of supply, a recommended spare parts list for one year of

operation, and a list of the parts recommended by the manufacturer to be replaced after 1 and 3 year(s) of service. The data shall include a completed checklist for all equipment, upon completion of the installation. Each element in the checklist shall be dated and signed.

Gauge Table; G-AO.

The original and two laminated reproductions of the table, and CD with table in PDF format, for each tank along with the accuracy certifications. Table shall be stamped by a registered professional engineer.

SD-04 Samples

Special Tools; G-AO.

Two sets of special tools required for maintenance. Special tools are those that only the manufacturer can provide for special purposes such as reaching otherwise inaccessible parts. The tools shall be supplied complete with a suitable tool box.

SD-05 Design Data

Calculations; G-AE.

Calculations for the roof structure: Calculations are not required for the roof structure shown on the contract drawings. However, calculations shall include an internal clearance diagram demonstrating that the required 8" freeboard has been provided.

The calculations shall also include the buoyancy of the floating pan and the structural stability of the floating pan when resting on the support legs. These calculations shall be prepared and sealed by a registered professional structural engineer.

SD-06 Test Reports

Steel Mill Reports; G-AE.

Mill reports covering chemical and physical properties of steel used in the storage tank construction.

Fire Test; G-AE.

Four copies of the information described below in bound 8-1/2 by 11-inch booklets. Drawings shall be folded blue lines with the title block visible.

(1) A list of equipment used along with calibration certifications.

(2) A copy of measurements taken.

(3) The date of testing.

(4) The parameters to be verified.

(5) The condition specified for the parameter.

(6) The test results, signed and dated by the manufacturer's representative.

Tests; G-AO.

Four copies of each test containing the information described below in bound 8-1/2 by 11-inch booklets. Individual reports shall be submitted for the storage tank tests, and the floating pan tests. Drawings shall be folded blue lines with the title block visible.

(1) A list of equipment used along with calibration certifications.

(2) A copy of measurements taken.

(3) The date of inspection.

(4) The parameters to be verified.

(5) The condition specified for the parameter.

(6) The inspection results, signed, dated, and certified by the field engineer. The certification shall state that all required procedures were accomplished, that the procedures were conducted in compliance with the plans and specifications.

(7) A description of adjustments performed.

Inspections; G-AO.

Four copies of each inspection containing the information described below in bound 8-1/2 by 11-inch booklets. Individual reports shall be submitted for the storage tank inspections, the floating pan inspections, and the piping inspections. Drawings shall be folded blue lines with the title block visible.

(1) A list of equipment used along with calibration certifications.

(2) A copy of measurements taken.

(3) The date of the inspection.

(4) The parameters and conditions to be verified.

(5) The inspection results, signed, dated, and certified by the installation Contractor. The certification shall state that all required procedures were accomplished and conducted in compliance with the plans and specifications.

(6) A description of adjustments performed.

(7) The film and inspection reports of radiographic inspections.

SD-07 Certificates

Welding; G-AO.

A letter listing the qualifying procedures for each welder. The letter shall include supporting data such as test procedures used,

what was tested to, etc. and a list of the names of qualified welders and their identification symbols.

Verification of Dimensions; .

A letter stating the date the site was visited and a listing of discrepancies found.

Floating Pan; .

A letter providing locations and points of contact where the floating pan design has been used in previous construction sites.

Radiographic Inspections; G-AO.

A letter identifying each inspector and their corresponding qualifications.

Experience; G-AO.

Evidence of the installation Contractor's experience, training, and licensing.

SD-08 Manufacturer's Instructions

Installation; .

The manufacturer's installation instructions and procedures for all equipment and components.

## 1.4 QUALIFICATIONS

### 1.4.1 Experience

#### 1.4.1.1 Installation Contractor

The installation Contractor shall have successfully completed manufacturer's training courses on the installation of storage tanks, piping, and tank management systems; have at least 5 years experience in the erection of aboveground vertical steel tanks with floating pans and fixed roofs; and meet the licensing requirements in the state.

#### 1.4.1.2 Design Engineering Contractor

A certified tank manufacturer shall perform the detailed engineering design for the new tank modifications. The tank manufacturer shall provide complete tank design calculations for all supplied tank features as per the requirements of the specifications and drawing details provided in the contract documents. Any redesign by a Structural Engineer must be approved. Minimum roof plate thickness shall be as shown on the contract drawings. The manufacturer shall have at least 5 years experience in the design of vertical tanks including floating pans and fixed roofs constructed with no center column.

### 1.4.2 Welding

Welding shall be in accordance with qualifying procedures using performance qualified welders and welding operators. Welding tests shall be performed

at the work site. Procedures and welders shall be qualified in accordance with ASME BPV IX. Welding procedures qualified by others, and welders and welding operators qualified by a previously qualified employer are not be acceptable. Each welder or welding operator shall apply his assigned symbol near each weld he makes as a permanent record. Structural members shall be welded in accordance with Section 05120 STRUCTURAL STEEL.

### 1.4.3 Radiographic Inspections

Inspectors to perform radiographic inspections on tank welds shall have qualifications in accordance with API Std 650.

## 1.5 REGULATORY REQUIREMENTS

### 1.5.1 Codes

The design, fabrication, and installation of the entire fueling system shall be in accordance with this specification as well as meet all federal, state, and local code requirements.

### 1.5.2 Permits

Contractor shall apply for and obtain an Authority to Construct Certificate from the District of Health of Hampton County prior to beginning construction. This Certificate addresses emissions from new stationary sources including aboveground tanks. In addition, all required permits must be obtained from the City of Hampton, the State of Virginia and the Federal government where applicable.

## 1.6 SAFETY REQUIREMENTS

Exposed moving parts, parts that produce high operating temperatures, pressures, parts which may be electrically energized, and parts that may be a hazard to operating personnel shall be insulated, fully enclosed, guarded, or fitted with other types of safety devices. Safety devices shall be installed so that proper operation of equipment is not impaired.

## 1.7 DELIVERY, STORAGE, AND HANDLING

Stored items shall be protected from the weather and contamination. Proper protection and care of all material before, during, and after installation is the Contractor's responsibility. Any materials found to be damaged shall be replaced at the Contractor's expense. During installation, piping and similar openings shall be capped to keep out dirt and other foreign matter.

## 1.8 PROJECT/SITE CONDITIONS

### 1.8.1 Verification of Dimensions

The Contractor shall become familiar with all details of the work, verify dimensions in the field, and advise the Contracting Officer of any discrepancy before performing any work.

### 1.8.2 Testing and Flushing

The Air Force will provide the necessary water, and fuel required for tank testing at the request of the contracting officer. To aid in water conservation, the same water must be reused for testing from one tank to

the next. Water from hydrostatic testing will be disposed of in accordance with the requirements of Section 01355A ENVIRONMENTAL PROTECTION.

## PART 2 PRODUCTS

### 2.1 STANDARD PRODUCTS

System components shall be environmentally suitable for the locations shown and shall be the manufacturer's standard as offered in catalogs for commercial or industrial use. Any non-standard product or component and the reason for its use shall be specifically identified by the Contractor in any required submittal.

### 2.2 NAMEPLATES

The existing nameplate shall be protected and possibly require relocation. If required, provide a new nameplate in accordance with API 653.

### 2.3 MATERIALS

#### 2.3.1 Fuels

Galvanized materials (zinc coated) shall not be allowed direct contact with any type fuel. Materials which come in contact with aviation fuel shall be noncorrosive (i.e., stainless steel, aluminum). Fuels as required by this specification shall be in accordance with the following:

##### 2.3.1.1 JP-8

Fuel shall be in accordance with MS MIL-DTL-83133.

#### 2.3.2 Gaskets

Gaskets shall be factory cut from one piece of material.

##### 2.3.2.1 Nitrile Butadiene (Buna-N)

Buna-N material shall be in accordance with SAE AMS 3275.

##### 2.3.2.2 Acrylonitrile Butadiene Rubber (NBR)

NBR material shall be made of material conforming to SAE AMS 3275.

#### 2.3.3 Structural Steel Shapes

Fabricated structural steel shapes shall be in accordance with ASTM A 36.

#### 2.3.4 Bolts

Bolts used for structural steel connections shall be in accordance with ASTM A 307 and ASTM A 325.

#### 2.3.5 Bird Screens

Vents, ports and similar openings shall be screened with 3/4-inch flattened expanded metal bird screen.

### 2.4 STORAGE TANKS

Materials used in the construction of a storage tank shall be aluminum,

carbon steel, stainless steel, or a combination of each.

2.4.1 Aluminum

Bars, rods, shapes and tubes shall be extruded and conform to the requirements of ASTM B 221. Plates and sheets shall conform to the requirements of ASTM B 209.

2.4.2 Carbon Steel

Plates and structural members shall conform to the requirements of API Std 650, Section 2 - "Materials" with a minimum corrosion allowance of 1/16-inch. Storage tank appurtenances not covered by API Std 650 shall be in accordance with ASTM A 36, ASTM A 131, ASTM A 283, or ASTM A 285 as applicable.

2.4.3 Stainless Steel

Stainless steel plates shall be Type 304 in accordance with ASTM A 240. Stainless steel plates for miscellaneous use shall be in accordance with ASTM A 176.

2.5 PARAGRAPH NOT USED

2.6 STORAGE TANK COMPONENTS

2.6.1 Sand Cushion

Already installed.

2.6.2 Floating Pan

The floating pan shall be naturally buoyant by means of non-perforated, individually sealed, closed cell type honeycomb cells (maximum horizontal plane dimensions of 1 inch by 1 inch). A rim shall be provided around the floating pan periphery and penetrations and extend a minimum of 6-inches above the free liquid surface. The rim shall contain turbulence and prevent fuel from splashing up onto the top surface of the floating pan.

2.6.2.1 Pan Integrity

The floating pan shall support the following loading conditions without causing damage to the pan, sinking the pan, or allowing product to spill onto the top surface of the pan in the event the pan is punctured.

(1) A uniform load of three times the weight of the pan.

(2) A point load of 500 pounds on a one square foot area anywhere on the floating pan while it is floating or resting on the legs.

2.6.2.2 Joint Connections

Aluminum sandwich panels shall be joined together by means of a gasketed joint that transmits loads without structural failure or leakage.

2.6.2.3 Aluminum Extrusions

Extrusions shall be made from alloy 6063-T6 in accordance with ASTM B 209.

2.6.2.4 Aluminum Sandwich Panels

Panels shall be made from alloy 3003 H14, 3003 H16, 3105 H14, 5010 H24, or 5052 H32 in accordance ASTM B 209. The skin of the panels shall have a minimum thickness of 0.014-inches. The core of the panels shall be 1-inch aluminum honeycomb, non-perforated.

2.6.2.5 Support Legs

Floating pan shall be provided with two position self draining legs that are designed to support a uniform load of 12.5 pounds per square foot. The legs shall be tubular structural members of aluminum or stainless steel at least 2-inches in diameter and ride with the pan when the fuel level is above the high position. The low position shall be 36-inches and high position 75-inches. The exact location and number of the support legs shall be as recommended by the floating pan manufacturer. The legs shall be capable of allowing a person, standing on top of the floating pan while the tank is in service, to perform the following functions:

(1) Change from the high to the low position.

(2) Change from the low to the high position.

(3) Completely remove the legs.

(4) Adjust the legs vertically a distance equal of plus or minus 3-inches.

2.6.2.6 Periphery Seals

Periphery seals shall be made of flexible polyurethane foam in accordance with ASTM D 3453 and be covered with a polyurethane coated polyester fabric wrap at least 0.025-inch thick. The periphery seal shall fit the space between the tank shell and the outer edge of the floating pan with two flexible seals, a primary and a secondary. The seals, primary and secondary as a unit, shall accommodate a deviation between the path of the floating pan relative to the tank shell of an additional 4-inches of compression and an additional extension of 2-inches from its normal compressed position at any fluid level. The primary seal shall be above the liquid level and be free draining without trapping any liquid. The secondary seal shall be above the primary seal. Seals shall be capable of being replaced during tank operations, be durable in the tank's environment, be abrasion resistant, and not discolor or contaminate the liquid stored in the tank.

2.6.2.7 Penetration Seals

Penetration seals shall be made of Buna-N. Vertical appurtenances such as gauge wells, ladders, cable, etc. that penetrate the floating pan shall have seals that permit a local deviation of plus or minus 5-inches and have a rim that extends a minimum of 6-inches above the free liquid to contain product turbulence and prevent the tank product from splashing up onto the top surface of the floating pan.

2.6.2.8 Manway

A manway shall be provided for each floating pan to provide access to the tank interior when the floating pan is on its supports and the tank is empty. Manway shall be co-located with the ladder. Manway shall have an

clear inside diameter of at least 36-inches.

2.6.2.9 Paragraph not used.

2.6.2.10 Grounding Cables

Two or more 1/4-inch diameter grounding cable made of 304 stainless steel aircraft cable conforming to ASTM A 492, with a maximum resistance of 8.5 ohms per 100 feet shall be provided for each tank. The exact location and number of grounding cables shall be as recommended by the floating pan manufacturer.

2.6.2.11 Anti-Rotation Cable

One 1/4-inch diameter anti-rotation cable made of 304 stainless steel conforming to ASTM A 492 shall be provided for each tank. Fittings for anti-rotation cables including cable clamps, pins, sockets, turnbuckles, U-bolts and nuts, etc. shall be 304 stainless steel. Cable shall be made taut by means of the turnbuckle. The exact location of the anti-rotation cable shall be as recommended by the floating pan manufacturer.

2.6.2.12 Fire Test

The floating pan design shall be fire tested by both of the following tests being applied to a test floating pan. The test floating pan shall be floated in gasoline. Successful conclusion of each fire test shall show that the design is adequate if no significant damage occurs to the pan, the pan continues to float, and the fire did not spread to the entire surface of the fuel.

(1) Hole Fire: The test floating pan shall have a 12-inch or larger diameter hole cut through it. After being lit, the fuel in the hole shall burn for a minimum of two hours.

(2) Rim Fire: After being lit, the fuel in the test rim section shall burn for a minimum of two hours.

2.6.3 Access Ladder

Ladder shall have a safety rail system with three safety belts and trolleys. The rail shall have a removable extension with clamps. Aluminum piping for ladder shall be in accordance with ASTM B 241 or ASTM B 345, alloy 6061-T6. Pipe 2-inches and larger shall be Schedule 40 or thicker.

2.6.3.1 Welding Process

The welding process for aluminum piping shall be a gas tunston arc or gas metal arc process in accordance with ASME B31.3.

2.6.3.2 Welding Electrodes

Welding electrodes shall be ER5356 conforming to AWS A5.10.

2.6.4 Shell Manhole

Manhole shall be gasketed fuel tight with a full face Buna-N or NBR gasket.

2.6.5 Fixed Roof

The tank shall be provided with a structurally supported steel cone roof with a 3/4" in 12" roof slope. The roof structure must be supported with no center column. Maximum deflection of roof structural members under applied live load, snow or wind load shall not exceed 1/180th of the span length.
The roof-to-shell joint shall be the frangible type as defined in API Std 650 Appendix F, NFPA 30, and API Std 2000 to satisfy emergency venting requirements. Tank roof shall have a bolted rectangular opening suitable for installation of floating pan panels. An 8" freeboard will be provided between the floating pan assembly and the tank roof structure. Freeboard is defined as the distance between the top of the floating pan rim seal extensions and the bottom of the steel roof supports.

2.6.6 Roof Manway

Manway shall be gasketed fuel tight, with a Buna-N gasket and include a gauge hatch. The gauge hatch shall be made of aluminum conforming to ASTM B 247 or bronze conforming to ASTM B 62, have a cover that is foot-operated to open, self-closing, lockable, and gasketed fuel tight with a Buna-N gasket.

2.6.7 Roof Inspection Hatch

A minimum of 4 hatches are required per tank. The maximum space between hatches shall be 32 feet. Designs that combine inspection hatches with circulation vents on the roof are acceptable.

2.6.8 Emergency Overflow Slot

Slot shall comply with API Std 650, Appendix H.

2.6.9 Circulation Vent

Venting for tanks shall comply with API Std 650, Appendix H.

2.6.10 Stairway

Stairway shall be supported completely on the shell of the tank with ends of the stringers clear of the ground and be constructed entirely of steel. At platform access openings, any space wider than 6-inches between the tank and the platform shall be floored. The existing stairway will require modification because of the new intermediate landings installed. Tank #1 has two (2) new intermediate landings and Tank #2 has one (1)new intermediate landing. In addition, the stairs leading up to the upper landing will require modification to accept the new upper landing. The replacement stairs shall be similar in design to those remaining.

2.6.11 Handrails

A continuous handrail shall be provided around the full perimeter of the tank roof, around the platforms, and down the stairway. The handrail shall be non-continuous only at access platforms and at roof vent/inspection hatches. Provide removable safety chain at roof vent/inspection hatches.

2.6.12 Interior Tank Coating

Interior tank coating shall be applied to all new and repaired interior

surfaces including piping and appurtenances in accordance with Section 09973 Interior Coating of Welded Steel Petroleum Fuel Tanks. Tank shall have the interior coating applied following the completion of the water fill tightness test. The exterior of carbon steel piping inside the tank shall be coated equal to the tank interior coating. Areas between the underside of the tank roof and the top surface of the rafters shall be coated. Contractor will be allowed to insert small wooden blocks between the roof and the rafters, sandblast the area, and then apply the coating. After the coating has dried, remove the blocks to allow the blocked areas to be sandblasted, coated, and dried.

2.6.13 Exterior Tank Coating

External tank coating shall be in accordance with Section 09971 Exterior Coating of Steel Structures. Exterior coating will be applied to the roof, new nozzles, new manways, new stairs and repaired areas.

2.6.14 Foundation Ring Wall Mastic Seal

Already installed.

2.6.15 Water Draw-Off System

Already installed.

2.6.16 Level Alarm System

The Level Alarm System shall be in accordance with paragraph "Operating Tank Level Switches" in Section 15050 Mechanical Equipment, Fueling.

2.6.17 Mechanical Tape Level Gauge

The mechanical tape gauge is existing but requires modification to the pipe, pulley and guide wires in order to function with the new roof and floating pan. Modification details are shown in the drawings.

2.6.18 Automatic Tank Gauge

The Automatic Tank Gauge shall be in accordance with paragraph "Operating Tank Level Indicator" in Section 15050 Mechanical Equipment, Fueling.

2.7 PIPING COMPONENTS

Pipe and fittings shall be installed and tested in accordance with Section 15060 Pipe, Manual Valves, and Fittings, Fueling System. Interior piping shall not be anchored to its supports or to the tank bottom.

2.7.1 Fill and Withdrawal Piping

Pipe internal to a storage tank shall be epoxy coated carbon steel. Interior of piping shall be factory coated. The fill piping is already installed.

2.7.2 Water Draw-Off Piping

Already installed.

2.7.3 Monitoring Well Piping

Already installed.

2.7.4 PVC

Already installed.

2.7.5 Pipe Supports

2.7.5.1 Exterior to Tanks

The assembly shall include a Type 38 adjustable pipe saddle support mounted to a concrete support as indicted on the drawings. The support shall be in accordance with MSS SP-58 and MSS SP-69. The Type 38 support shall be provided with a Teflon bearing pad.

2.7.5.2 Interior to Tanks

The assembly shall be constructed of steel angle frames with slotted bolt holes. The frames shall be in accordance with ASTM A 36. The assembly shall be held together with ASTM A 193 stainless steel nuts and bolts. Each leg of the assembly shall be welded to a 6-inch circular sheet of steel, which in turn shall be welded to the tank bottom. The entire assembly shall be coated with the same material as specified for the interior of the tank. The 8-inch fill line and diffuser supports are already installed.

2.8 SUPPLEMENTAL COMPONENTS/SERVICES

2.8.1 Earthwork

Already installed.

2.8.2 Cathodic Protection

Already installed.

2.8.3 Exterior Coatings for Miscellaneous Items

Painting required for exterior surfaces not otherwise specified, including items only primed at the factory, shall be painted as specified in Section 09900 Painting, General. Steel surfaces to be externally coated or painted shall be cleaned to a commercial grade blast cleaning finish in accordance with SSPC SP 6 prior to the application of the coating.

2.8.4 Identification Markings

Tanks, pipe, equipment, etc. supplied under this section shall have identification markings applied in accordance with Section 15060 Pipe, Manual Valves, and Fittings, Fueling System.

2.8.5 Concrete

Concrete, including the stair landing, shall be supplied and installed in accordance with Section 03100A STRUCTURAL CONCRETE FORMWORK, Section 03200A CONCRETE REINFORCEMENT, and 03300 CAST-IN-PLACE STRUCTURAL CONCRETE.

2.8.6 Flexible Membrane Liner

Already installed.

PART 3 EXECUTION

3.1 INSTALLATION

The installation Contractor shall supervise the complete installation of the fueling system and perform all inspections and tests.

3.1.1 Sand Cushion

Already installed.

3.1.2 Storage Tank

Openings larger than 2-inches through the shell of the tank shall be reinforced. Shop and field fabrication shall meet the requirement of API Std 650 as adjusted herein. Spacing distances between weld seams and all shell penetrations (including manways) shall be in accordance with API Std 650. Work shall be fabricated and erected in accordance with the fabricator's approved erection drawings. Vertical appurtenances shall be plumb within a tolerance of 3-inches at one end over its length.

3.1.2.1 Outer Shell

Already installed.

3.1.2.2 Bottom

Already installed.

3.1.2.3 Defect Removal

The determination of limits of defective welding and repair of defective welds shall be in accordance with API Std 650. Grind off rough surfaces on weld seams, sharp edges and corners to a radius of not less than 1/8-inch.

3.1.2.4 Welding Procedures

Welding shall be done using qualified welding procedures. The surface shall be cleaned before welding. Repair welds shall be made using an electrode or filler wire preferably smaller than that used in making the original weld. Repair welds shall meet the original weld's requirements.

3.1.2.5 Floor and Roof Welded Appurtenance Connections

Appurtenance connections to be welded to the floor or roof of a storage tank shall be made prior to application of the interior coating.

3.1.3 Floating Pan

After the tank fuel piping connections are completed, the interior and exterior coating has been inspected, approved, and the interior coating system has had at least 14 days to cure after the final coating was applied, the floating pan shall be installed. The floating pan shall be installed to have unrestricted vertical movement from its normal bottom to top position without damaging the tank, interior tank coating, or the

floating pan.

3.2 TESTS

3.2.1 Sand Cushion Tests

Already performed.

3.2.2 Storage Tank Tests

3.2.2.1 Paragraph not used.

3.2.2.2 Liquid Penetrant

Already performed.

3.2.2.3 Water Fill Tightness

Following the successful completion of the radiographic inspection of the new welds on the tank and internal piping, Tanks #1 and #2 shall be subjected to a hydrostatic water fill tightness test. The water fill tightness test will not be required on Tanks #3 through #6. The test shall include the following in sequential order:

(1) Prior to connecting water fill lines to the tank, not less than 6 equally spaced points shall be selected and marked on the ring wall. Grade elevations shall be taken at the top of the ring wall at each marked point.

(2) Water shall be flushed from the tank through each tank/pipe connection into the diked area to ensure any accumulated dirt and sediment is not flushed into the tank.

(3) The tank shall be filled in four increments equal to twenty-five percent of total capacity. At the end of each fill increment, two hours shall pass before grade elevations are taken at the top of the ring wall at each marked point. The tank shall also be visually inspected for leakage. Settlement values shall be calculated from the elevation differences. The appearance of damp spots shall be considered evidence of leakage, the Contracting Officer shall be notified and the water remove immediately. Defects found during the test shall be corrected and the tank retested.

(4) The tank shall be maintained full of water until the settlement of the tank stabilizes or a period not less than less than 24 hours. After the water is removed, obtain grade elevations and determine settlement at each of the marked ring wall locations.

(5) The same water shall be used to first fill one tank and then the remaining tank. The tank shall be emptied by draining the water in accordance with Section 01355A ENVIRONMENTAL PROTECTION.

(6) The tank bottom shall be inspected for standing water. No standing water shall be allowed anywhere on the sloped floor. If action has to be taken to correct standing water the water fill test shall again be conducted.

3.2.2.4 Tank Fuel Fill Tightness

Following the installation of the liquid level gauging equipment, the tank shall be subjected to a fuel fill tightness test. The tank shall be filled to one-half of total capacity and held at that level for an initial 12 hour period. The tank shall then be filled to total capacity and held at that level for a second 12 hour period. Following the temperature stabilization of the fuel, daily readings of the fuel levels shall be taken for a period of 10 days. Visual inspections and liquid level gauge readings shall be performed hourly to detect leaks during the initial and the second 12 hour periods of the test. Upon the acknowledgment of a leak, the Contracting Officer shall be notified immediately, the fuel shall be removed, the fuel vapor within the tank shall be removed, the tank interior and the tank site shall be cleaned, all defects corrected, and the fill test repeated. In the event fuel is removed from the tank, the internal coating system shall be visually inspected for damage before the tank is refilled.

3.2.3 Floating Pan Tests

Following the installation of a floating pan, the deck penetrations and rim area shall be subjected to a visual inspection for seal tightness. Leaks or seal deformations shall be corrected according to manufacturer's recommendations. Following the seal inspection, the floating pan shall be subjected to a flotation test. The tank shall be filled to 25 percent of the total capacity with fuel. While filling the tank, the top of the floating pan shall be visually inspected for fuel leakage. The appearance of damp spots on the top of the floating pan shall be considered evidence of leakage, the Contracting Officer shall be notified and the fuel remove immediately. Leaks shall be repaired and the flotation test performed again.

3.3 INSPECTIONS

3.3.1 Storage Tank

3.3.1.1 Visual Inspection of Welds

Following the tank construction, each new tank welded joint shall be visually inspected for defects. Welds with excess convexity and overlap shall be have excess metal removed. Welds with excess concavity, that are undersized, or show undercutting shall be cleaned and additional metal added. Welds with excess porosity, inclusions, lack of fusion, or incomplete penetration shall have the defective portions removed and re-welded. Cracks in a weld or a tank plate shall be removed by cutting around the entire crack and re-welding the defect. Welds with poor fit-up shall be cut apart and re-welded. New couplings shall be inspected per the requirements of API 653.

3.3.1.2 Radiographic Inspections

Radiographic inspection procedures shall be in accordance with API Std 650. Defective welds shall be repaired and followed with a new radiographic inspection to the newly repaired area. If defects are identified in a radiograph, additional radiographs shall be performed in accordance with the requirements of API Std 650. In addition, when a defect is identified in a radiograph, two additional locations shall be radiographically examined in the same weld increment at locations away from the original spot. The locations of these additional spots shall be determined by the

Inspector or Contracting Officer. The use of force (peening) or foreign materials to mask, fill in, seal, or disguise any welding defects shall not be permitted.

## 3.4 CLEANING AND ADJUSTING

### 3.4.1 Tank Interior

After completion of the tank coating but prior to the floating pan tests, interior surfaces within the tank shall be cleaned to eliminate any foreign matter such as water, dirt, debris, grease, oils, etc.

### 3.4.2 Tank Calibration

#### 3.4.2.1 Tank Strapping

Tank strapping shall be performed on Tanks #1 and #2 and be performed in strict accordance with applicable recommendations and requirements of the API Std 2550. Circumferential measurements shall be determined by the critical measurements method, as defined by API Std 2550. Tank strapping shall cover the entire height of the tank extending to the overflow port and take into account all deadwood, including the floating pan, per the requirements of API Std 2550.

#### 3.4.2.2 Gauge Table

A gauge table and two laminated reproductions shall be provided for the two modified operating tanks based on the tank strapping results. Gauge table shall also be provided on a CD in PDF format. The gauge table shall read in feet and inches with the smallest increment of measure being 1/8-inch. Table shall indicate the capacity of the tank in gallons to the nearest gallon for each 1/8-inch increment when measured by a steel tape lowered through the roof at the manual gauge well. The master gauge table shall be typed on tracing cloth or other transparency suitable for reproduction. The gauge table shall be certified for accuracy by the firm which prepared the table and the installation Contractor, and stamped by a registered professional engineer.

### 3.4.3 Final Adjustments

Following system completion but prior to the demonstration, the entire system shall be adjusted to meet final design requirements. Each electronic level sensing alarm shall be tested for proper operation. Fuel level gauges shall be adjusted and calibrated in accordance with the manufacturer's instructions. Calibration of level gauges shall be supervised by a manufacturer's representative. The tank's water draw-off system shall be tested to verify proper operation. The draw-off system shall be filled with a water and fuel mixture. The separation of the water and fuel shall be verified through the system's sight glass.

--End of Section--

SECTION TABLE OF CONTENTS

DIVISION 15 - MECHANICAL

SECTION 15177

PETROLEUM TANK CLEANING

05/99

PART 1 GENERAL

1.1 REFERENCES
1.2 CONTRACTOR QUALIFICATIONS
1.3 SUBMITTALS
1.4 GOVERNMENT FURNISHED SERVICES
1.4.1 Fuel Removal
1.4.2 Utilities
1.4.3 Electrical Equipment Approval
1.5 TANK ENTRY EQUIPMENT
1.5.1 Air Movers
1.5.2 Combustible Gas Indicator
1.5.3 Lights
1.5.4 Miscellaneous Supplies
1.6 PRECAUTIONS TO FOLLOW
1.6.1 Tank Cleaning
1.6.2 Tank Entry Permission
1.6.3 Physical Contact
1.7 TANK VENTILATION
1.7.1 Air Movers
1.7.2 Precautions
1.8 PREPARATION AND TANK CLEANING
1.8.1 Blind Flanges
1.8.2 Tank Survey
1.8.3 Equipment Placement
1.8.4 Contractor Responsibility
1.8.5 Lighting
1.8.6 Cleaning
1.8.7 Water Usage and Disposal
1.8.8 Floor Drying
1.8.9 Potential Explosive Vapors
1.9 CLEANUP AND ACCEPTANCE
1.10 STENCILING TANK
1.11 QUALIFIED PETROLEUM TANK CONTRACTORS

PART 2 PRODUCTS (NOT APPLICABLE)

PART 3 EXECUTION (NOT APPLICABLE)

-- End of Section Table of Contents --

SECTION 15177

PETROLEUM TANK CLEANING
05/99

PART 1 GENERAL

Attachments: A - Contractors Qualification Statement

1.1 REFERENCES

The publications listed below form a part of this specification to the extent referenced. The publications are referred to in the text by basic designation only.

AMERICAN PETROLEUM INSTITUTE (API)

| | |
|---|---|
| API 2015 | (1994) Safe Entry and Cleaning of Petroleum Storage Tanks, Planning and Managing Tank Entry From Decommissioning Through Decommissioning. |

AIR FORCE MANUALS (AFM)

| | |
|---|---|
| AFM 85-16 | Maintenance of Petroleum Systems |

AIR FORCE OCCUPATION SAFETY AND HEALTH STANDARDS (AFOSHSTD)

| | |
|---|---|
| AFOSHSTD 48-137 | (1998) Respiratory Protection Program |
| AFOSHSTD 91-38 | (1997) Hydrocarbon Fuels - General |
| AFOSHSTD 91-66 | (1977) General Industrial Operations |

NATIONAL FIRE PROTECTION AGENCY (NFPA)

| | |
|---|---|
| NFPA 70 | (1999) National Electrical Code |

OCCUPATIONAL SAFETY AND HEALTH ADMINISTRATION (OSHA)

| | |
|---|---|
| OSHA 29 CFR 1910.28 | Safety Standards for Scaffolding |

UNITED STATES CODE (USC)

| | |
|---|---|
| USC Title 42 | The Public Health and Welfare |

1.2 CONTRACTOR QUALIFICATIONS

All prospective contractors shall submit a contractor's qualification (see Attachment A).

## 1.3 SUBMITTALS

Government approval is required for submittals with a "G" designation; submittals not having a "G" designation are for information only. When used, a designation following the "G" designation identifies the office that will review the submittal for the Government. The following shall be submitted in accordance with Section 01330 SUBMITTAL PROCEDURES:

SD-07 Certificates

Contractor's Qualification Statement; G-AO

Contractor's Qualification Statement shall include:

The name and qualifications of the Contractor's Representative who will be in charge of the work and be present at the job site when any tank work is being accomplished.

A complete list of equipment, with adequate nomenclature by item, to be used or available at the job site.

Contractor's Plan of Operations.

## 1.4 GOVERNMENT FURNISHED SERVICES

### 1.4.1 Fuel Removal

The base fuels officer will remove the fuel within 18 inches of the bottom with the fixed pumping system. The Contractor shall remove the remaining fuel by pumping into a Government tank truck. Any fuel remaining in the tank, after the tank has been released to the Contractor, shall be considered as contaminated and disposed of by the Contractor. The Contractor shall remove the fuel from the base and dispose of it in a manner consistent with applicable pollution control regulations, and all local, state, and federal EPA regulations.

### 1.4.2 Utilities

Water and electricity will be made available to the Contractor as described in Section 00800 SPECIAL CONTRACT REQUIREMENTS.

### 1.4.3 Electrical Equipment Approval

All electrical equipment and conductors used by the Contractor within 50 feet of any fuel pipes or storage tanks shall be approved for use in Class 1, Division 1, Group C, hazardous areas.

## 1.5 TANK ENTRY EQUIPMENT

The Contractor shall furnish all necessary clothing and equipment required for the work and protection of personnel, regardless of whether they enter a tank or handle materials outside the tank. Before any tank cleaning work is performed, the Contractor's equipment will be inspected and approved at the job site, by the Contracting Officer, to insure that the equipment includes, but is not necessarily limited to the following:

1.5.1 Air Movers

Air-movers, either explosion proof and electrically operated, or air driven, eductor type only. One air driven type is listed in the MSA catalog as a "Lamb Air-Mover Ventilator." All air-movers used will be the educing type capable of educing vapors from the tank. Air-movers blowing air into the tank will not be used during the vapor freeing or cleaning periods of work.

1.5.2 Combustible Gas Indicator

One (1) combustible gas indicator.

1.5.3 Lights

Explosion proof portable battery powered lights (Mining Enforcement and Safety Administration approved).

1.5.4 Miscellaneous Supplies

Buckets for soapy water, adequate supply of a denatured alcohol, and cotton swabs.

1.6 PRECAUTIONS TO FOLLOW

1.6.1 Tank Cleaning

All tanks being cleaned, regardless of the type of fuel stored therein, shall be considered leaded and explosive until all sludge and loosely adhering rust scale have been removed.

1.6.2 Tank Entry Permission

Prior to entry into any tank, Contractor will obtain permission from the Contracting Officer and the liquid fuels maintenance supervisor. This permission will be granted only when , or after:

(a) The Contractor's qualified supervisor is present.

(b) The contractor personnel have been briefed by the supervisor on what is to be done; what each employee is to do in the event of an emergency; and how long each man or cleaning crew will remain in the tank under normal conditions.

(c) All required equipment is approved and properly located.

(d) Personnel are equipped with properly fitted protective equipment.

(e) The entire area adjacent to the tank is secured.

(f) Air-movers, eductor type only, have been operating continuously for at least one (1) hour, and will continue to operate throughout the entire period personnel are cleaning the tank. The Contracting Officer may allow air-movers to be turned off after one (1) hour with continuous monitoring of the vapor level below 20 percent of the Lower Explosive Limit (LEL).

1.6.3 Physical Contact

Physical contact shall be avoided and maximum care shall be taken to prevent contamination of water supplies or streams. Physical contact with leaded sludge is dangerous due to the toxicity of the lead alkyd compounds, either in liquid or gaseous state.

a. Tests for lead in the air above any sludge which is deposited on the open ground have shown that values are low at all times, even with no apparent wind. The sludge, therefore, is safe with regard to air contamination as soon as it is spread in the open. Industrial standards of 20 ppm of organic lead is the limit in the sludge that can be considered safe after sludge has been weathered. If weathering is a treatment process, it must be done in accordance with RCRA. If this disposal method is used, maximum care shall be taken to insure that there is no runoff to contaminate water supplies or streams before the end of the weathering period.

b. There shall be no smoking; matches or cigarette lighters shall not be carried by the tank crew or other persons entering the tank area. Brooms or brushes that have plastic synthetic bristles shall not be used.

c. All Government equipment shall be protected against dirt, water, chemical, or mechanical injury.

1.7 TANK VENTILATION

1.7.1 Air Movers

Air-movers of the eductor type described earlier shall be used. Tank fuel vapors are heavier than air and except on hot days (80 Degrees F. to 110 Degrees F.), accumulate in the bottom portion of the tank. Blowing air into the tank tends to "stir" the vapors, requiring a long period of time before any appreciable drop in vapor-air ratio is noted. Eductor type air-movers, with flexible oil proof canvas hoses attached, inserted in the tank near the bottom will educt vapors from the tank in a short period of time. On hot days, a fog type water spray over the opening, admitting fresh air into the tank will condense vapors and facilitate removal. All tank openings, except the one used to insert the oil proof flexible hose and the one admitting fresh air into the tank, should be kept closed until workmen have entered the tank.

1.7.2 Precautions

Although eductors may be used through bottom manholes on an above ground tank, it is preferred that top manholes or vent piping be used on above ground tanks. Using eductors on top of the tank will allow for dissipation of the vapors, thus preventing them from settling in low places at ground level. All other manholes and tank openings should be closed when the tank is initially ventilated. They should be opened, however, when work is started to take advantage of the light these openings let into the tank.

1.8 PREPARATION AND TANK CLEANING

1.8.1 Blind Flanges

The Contractor shall provide and install blind flanges or spectacle blinds on each pipeline connected to the tank. When blind flanges are used, they

will be placed on the end of the pipe and not on the tank opening. Spectacle blinds shall, if used, be inserted between the tank valve and the flange nearest the tank. Gaskets shall be inserted on both sides of the spectacle blind. CAUTION: DO NOT REMOVE VALVES OR DISCONNECT PIPING FROM ANY TANK UNTIL POSITIVELY CERTAIN THE LINE HAS BEEN EMPTIED OF FUEL. DO NOT REMOVE BLIND OR SPECTACLE FLANGES UNTIL ALL INTERIOR WORK IS COMPLETE AND THE SYSTEM IS READY TO BE PUT BACK INTO SERVICE.

1.8.2 Tank Survey

The Contractor, by physically surveying the area within 50 feet of the tank to be entered or cleaned, shall assure that no vapors are present in pits or low places, and that unauthorized personnel are cleared from the area. The Contractor shall provide this area with "No Smoking" signs. All personnel entering the area shall leave all cigarettes and flame producing devices at a previously determined location.

1.8.3 Equipment Placement

The Contractor shall place all equipment upwind of the tank openings. Equipment shall be placed at the highest elevation possible; never in an area lower than the surrounding terrain. Internal combustion engine driven equipment shall be equipped with flame arresters and protected ignition systems and must be positioned a minimum of 50 feet from an open manhole.

1.8.4 Contractor Responsibility

The Contractor shall be responsible for reviewing the drawings of the tank to be cleaned. The Contractor shall brief his personnel on the location of floor pits, sumps, or other tank appurtenances considered hazardous to personnel. The Contractor shall work in accordance with API 2015, AFM 85-16, AFOSHSTD 48-137, AFOSHSTD 91-38, and AFOSHSTD 91-66, OSHA 29 CFR 1910.28 and USC Title 42 Section 6901. Whenever the information contained herein conflicts with the previously listed standards, the information here shall govern.

1.8.5 Lighting

Explosion proof battery powered safety flashlights, or safety lanterns may be used inside the tank or within 50 feet of the tank during any tank cleaning operation. Explosion proof lights approved for use under Class I, Division I, Group C and D, as defined by NFPA 70, may be used inside the tank during tank coating operations.

1.8.6 Cleaning

After waste fuel has been removed from the tank, and with personnel wearing protective equipment, the bottom of the tank and three (3) feet up on the sides shall be scraped until all loosely adhering rust and scale have been removed and placed with waste fuel removed from the tank. The remainder of the tank sides, and all metal supports and braces, shall be washed down with a high pressure water hose until the water flowing or pumped out of the tank is clean. Decks or tops of vertical tanks shall also be washed.

1.8.7 Water Usage and Disposal

Water used to wash down a scraped tank shall be contained. It may be channeled or pumped from the tank through a spillway into a drainage system having an oil/water separator of adequate capacity. The discharge effluent

containing the petroleum products is processed in this manner to prevent the fuel products from entering any above or below ground water sources. All water shall be discharged into the sanitary sewer or industrial waste only. The separated petroleum products shall be disposed of with the fuel tailings by the Contractor. Running or pumping waste fuel into natural waterways, sewers, storm drains, or on to ground is prohibited.

1.8.8 Floor Drying

After the tank has been washed, the floor will be dried out.

1.8.9 Potential Explosive Vapors

Pipes used for center poles, and braces, pontoons, and leaking bottoms are a potential source of explosive vapors even after then tank is cleaned. The tank may be determined to be vapor free below four (4) percent of lower explosive limit; but after one (1) or two (2) hours, explosive readings may again be obtained from these sources. Because of this, the Contractor shall take readings at least every one-half (1/2) of an hour when working in tanks after they have been cleaned and each floating roof or pan pontoon shall be checked individually with a combustible gas indicator.

1.9 CLEANUP AND ACCEPTANCE

After all water and sludge materials have been removed from the tank and the Contracting Officer has inspected and accepted the tank cleaning, all valves, piping, manhole covers, etc. (removed at start of the job to facilitate ventilation), shall be reinstalled with new gasket material (resistant to aircraft fuel) and shall not be less than the thickness of the gasket removed. The entire tank area shall be restored to its original condition.

1.10 STENCILING TANK

At the completion of the exterior tank painting work, Contractor shall stencil the tank in 3/4 to 1-inch letters adjacent to the manhole openings with the essential information as shown in the following example:

| | |
|---|---|
| DATE CLEANED: | 1/16/71 |
| CONTRACTOR: | JOHN DOE |
| ADDRESS: | 1017 CHESTNUT STREET<br>CHICAGO, ILLINOIS |

1.11 QUALIFIED PETROLEUM TANK CONTRACTORS

All prospective contractors must submit a contractor's qualification statement similar to attachment A. To qualify, the Contractor must:

a. Show proof of having completed similar work on three (3) previous projects. The work falls into three (3) categories; tank entry, coating, and petroleum system welding.

b. Submit proof that welders are API certified.

c. Certify that before commencing work, the contractor supervisor on the job site will be thoroughly familiar with JP-8 fuel characteristics and worker safety requirements.

PART 2 PRODUCTS (NOT APPLICABLE)

PART 3 EXECUTION (NOT APPLICABLE)

**ATTACHMENT A**

**CONTRACTORS QUALIFICATION STATEMENT**

1. Name of Firm:

2. State briefly why firm is qualified to clean strap, calibrate, repair, or coat petroleum storage tanks.

3. List the size of tank(s) the firm has successfully completed work on; also, give the location of each tank, the owner's name, and the name of a person(s) that may be contacted regarding the tank(s) listed.

4. Since gauge charts are to be individually certified by the firm, what guarantee backs the firm's certificate?

5. The Owner/Owners must furnish the following statements, signed and dated:

(NOTE: If the statements to Items a and b are positive, furnish a detailed explanation.)

a. I (We) _____ have (have not) has a loss of life or injury requiring hospitalization of any employee of this or any other contracting firm that I (we) have owned or managed separately or together.

b. I (We) _____ have (have not) been involved in a contract where a loss of property occurred under this or any other company name.

c. I (We) _____ have completed tank cleaning, repair, or calibration of the following Department of Defense installations. This list must be complete for the past eight (8) years.

d. I (have)(will obtain prior to bidding) a copy of the American Petroleum Institute - API 2015, Cleaning Petroleum Storage Tanks.

6. List the make and model numbers of the following pieces of equipment:

a. Respirators.
b. Safety Harness.
c. Combustion Gas Indicators.
d. Air Compressors.
e. Air Purifiers.

7. Furnish at least three (3) letters of competency from contracts accomplished within the last five (5) years.

I hereby certify the foregoing statements are true and complete.

_____

-- End of Section --

SECTION TABLE OF CONTENTS

DIVISION 15 - MECHANICAL

SECTION 15400A

PLUMBING, GENERAL PURPOSE

**04/03**

PART 1 GENERAL

1.1 REFERENCES
1.2 SUBMITTALS
1.3 STANDARD PRODUCTS
1.4 ELECTRICAL WORK
1.5 PERFORMANCE REQUIREMENTS
1.6 REGULATORY REQUIREMENTS
1.7 PROJECT/SITE CONDITIONS

PART 2 PRODUCTS

2.1 MATERIALS
2.1.1 Pipe Joint Materials
2.1.2 Miscellaneous Materials
2.1.3 Pipe Insulation Material
2.2 PIPE HANGERS, INSERTS, AND SUPPORTS
2.3 VALVES
2.3.1 Wall Hydrants
2.3.2 Relief Valves
2.3.3 Thermostatic Mixing Valves
2.4 FIXTURES
2.5 BACKFLOW PREVENTERS
2.6 DRAINS
2.6.1 Floor Drains
2.7 TRAPS
2.8 WATER HEATERS
2.8.1 Automatic Storage Type
2.8.1.1 Electric Type

PART 3 EXECUTION

3.1 GENERAL INSTALLATION REQUIREMENTS
3.1.1 Water Pipe, Fittings, and Connections
3.1.1.1 Utilities
3.1.1.2 Cutting and Repairing
3.1.1.3 Protection of Fixtures, Materials, and Equipment
3.1.1.4 Mains, Branches, and Runouts
3.1.1.5 Pipe Drains
3.1.1.6 Expansion and Contraction of Piping
3.1.1.7 Commercial-Type Water Hammer Arresters
3.1.2 Joints
3.1.2.1 Threaded
3.1.2.2 Unions and Flanges
3.1.2.3 Grooved Mechanical Joints
3.1.2.4 Cast Iron Soil, Waste and Vent Pipe

3.1.2.5 Copper Tube and Pipe
3.1.2.6 Other Joint Methods
3.1.3 Dissimilar Pipe Materials
3.1.4 Corrosion Protection for Buried Pipe and Fittings
3.1.4.1 Cast Iron and Ductile Iron
3.1.4.2 Steel
3.1.5 Pipe Sleeves and Flashing
3.1.5.1 Sleeve Requirements
3.1.5.2 Flashing Requirements
3.1.5.3 Waterproofing
3.1.5.4 Optional Counterflashing
3.1.5.5 Pipe Penetrations of Slab on Grade Floors
3.1.6 Fire Seal
3.1.7 Supports
3.1.7.1 General
3.1.7.2 Pipe Supports and Structural Bracing, Force Protection Requirements
3.1.7.3 Pipe Hangers, Inserts, and Supports
3.1.7.4 Structural Attachments
3.1.8 Welded Installation
3.1.9 Pipe Cleanouts
3.2 WATER HEATERS AND HOT WATER STORAGE TANKS
3.2.1 Relief Valves
3.2.2 Installation of Electric Water Heaters
3.2.3 Heat Traps
3.2.4 Connections to Water Heaters
3.3 FIXTURES AND FIXTURE TRIMMINGS
3.3.1 Fixture Connections
3.3.2 Flushometer Valves
3.3.3 Height of Fixture Rims Above Floor
3.3.4 Fixture Supports
3.3.4.1 Support for Solid Masonry Construction
3.3.4.2 Support for Concrete-Masonry Wall Construction
3.3.4.3 Support for Steel Stud Frame Partitions
3.3.4.4 Support for Wood Stud Construction
3.3.5 Backflow Prevention Devices
3.3.6 Access Panels
3.3.7 Sight Drains
3.3.8 Traps
3.4 IDENTIFICATION SYSTEMS
3.4.1 Identification Tags
3.4.2 Pipe Color Code Marking
3.5 ESCUTCHEONS
3.6 PAINTING
3.7 TESTS, FLUSHING AND DISINFECTION
3.7.1 Plumbing System
3.7.1.1 Test of Backflow Prevention Assemblies
3.7.2 Defective Work
3.7.3 System Flushing
3.7.3.1 During Flushing
3.7.3.2 After Flushing
3.7.4 Operational Test
3.7.5 Disinfection
3.8 PLUMBING FIXTURE SCHEDULE
3.9 POSTED INSTRUCTIONS
3.10 PERFORMANCE OF WATER HEATING EQUIPMENT
3.10.1 Storage Water Heaters
3.10.1.1 Electric
3.11 TABLES

-- End of Section Table of Contents --

SECTION 15400A

PLUMBING, GENERAL PURPOSE
**04/03**

PART 1 GENERAL

1.1 REFERENCES

The publications listed below form a part of this specification to the extent referenced. The publications are referred to within the text by the basic designation only.

AIR CONDITIONING AND REFRIGERATION INSTITUTE (ARI)

| | |
|---|---|
| ARI 1010 | (1994) Self-Contained, Mechanically Refrigerated Drinking-Water Coolers |
| ARI 700 | (1999) Specifications for Fluorocarbon and Other Refrigerants |

AMERICAN NATIONAL STANDARDS INSTITUTE (ANSI)

| | |
|---|---|
| ANSI Z21.22 | (1999; A 2001) Relief Valves for Hot Water Supply Systems |
| ANSI Z124.5 | (1997) Plastic Toilet (Water Closet) Seats |
| ANSI Z358.1 | (1998) Emergency Eyewash and Shower Equipment |

ASTM INTERNATIONAL (ASTM)

| | |
|---|---|
| ASTM A 105/A 105M | (2002) Carbon Steel Forgings for Piping Applications |
| ASTM A 193/A 193M | (2001b) Alloy-Steel and Stainless Steel Bolting Materials for High-Temperature Service |
| ASTM A 515/A 515M | (2001) Pressure Vessel Plates, Carbon Steel, for Intermediate- and Higher-Temperature Service |
| ASTM A 516/A 516M | (2001) Pressure Vessel Plates, Carbon Steel, for Moderate- and Lower-Temperature Service |
| ASTM A 53/A 53M | (2002) Pipe, Steel, Black and Hot-Dipped, Zinc-Coated, Welded and Seamless |
| ASTM A 733 | (2001) Welded and Seamless Carbon Steel and Austenitic Stainless Steel Pipe Nipples |
| ASTM A 74 | (1998) Cast Iron Soil Pipe and Fittings |

| | |
|---|---|
| ASTM A 888 | (1998el) Hubless Cast Iron Soil Pipe and Fittings for Sanitary and Storm Drain, Waste, and Vent Piping Applications |
| ASTM B 306 | (2002) Copper Drainage Tube (DWV) |
| ASTM B 32 | (2000e1) Solder Metal |
| ASTM B 370 | (1998) Copper Sheet and Strip for Building Construction |
| ASTM B 42 | (2002) Seamless Copper Pipe, Standard Sizes |
| ASTM B 43 | (1998) Seamless Red Brass Pipe, Standard Sizes |
| ASTM B 584 | (2000) Copper Alloy Sand Castings for General Applications |
| ASTM B 813 | (2000e1) Liquid and Paste Fluxes for Soldering of Copper and Copper Alloy Tube |
| ASTM B 828 | (2002) Making Capillary Joints by Soldering of Copper and Copper Alloy Tube and Fittings |
| ASTM B 88 | (2002) Seamless Copper Water Tube |
| ASTM B 88M | (1999) Seamless Copper Water Tube (Metric) |
| ASTM C 564 | (1997) Rubber Gaskets for Cast Iron Soil Pipe and Fittings |
| ASTM C 920 | (2002) Elastomeric Joint Sealants |
| ASTM D 2822 | (1991; R 1997el) Asphalt Roof Cement |
| ASTM D 3308 | (2001) PTFE Resin Skived Tape |
| ASTM E 1 | (2001) ASTM Thermometers |
| ASTM F 877 | (2002a) Crosslinked Polyethylene (PEX) Plastic Hot- and Cold- Water Distribution Systems |

AMERICAN SOCIETY OF HEATING, REFRIGERATING AND AIR-CONDITIONING ENGINEERS (ASHRAE)

| | |
|---|---|
| ASHRAE 34 | (2001; Errata 2002) Designation and Safety Classification of Refrigerants |
| ASHRAE 90.1 | (2001; various Errata) Energy Standard for Buildings Except Low-Rise Residential Buildings |

AMERICAN SOCIETY OF SANITARY ENGINEERING (ASSE)

| | |
|---|---|
| ASSE 1001 | (2002) Atmospheric Type Vacuum Breakers |
| ASSE 1005 | (1999) Water Heater Drain Valves |
| ASSE 1011 | (1993) Hose Connection Vacuum Breakers |
| ASSE 1012 | (2002) Backflow Preventers with Intermediate Atmospheric Vent |
| ASSE 1013 | (1999) Reduced Pressure Principle Backflow Preventers and Reduced Pressure Fire Protection Principle Backflow Preventers |
| ASSE 1020 | (1998) Pressure Vacuum Breaker Assembly |
| ASSE 1037 | (1990) Pressurized Flushing Devices (Flushometers) for Plumbing Fixtures |

AMERICAN WATER WORKS ASSOCIATION(AWWA)

| | |
|---|---|
| AWWA B300 | (1999) Hypochlorites |
| AWWA B301 | (1999) Liquid Chlorine |
| AWWA C105 | (1999) Polyethylene Encasement for Ductile-Iron Pipe Systems |
| AWWA C203 | (2002; A C203a-99) Coal-Tar Protective Coatings and Linings for Steel Water Pipelines - Enamel and Tape - Hot-Applied |
| AWWA C606 | (1997) Grooved and Shouldered Joints |
| AWWA C651 | (1999) Disinfecting Water Mains |
| AWWA C652 | (2002) Disinfection of Water Storage Facilities |
| AWWA EWW | (1998) Standard Methods for the Examination of Water and Wastewater |

AMERICAN WELDING SOCIETY (AWS)

| | |
|---|---|
| AWS A5.8 | (1992) Filler Metals for Brazing and Braze Welding |
| AWS B2.2 | (1991) Brazing Procedure and Performance Qualification |

ASME INTERNATIONAL (ASME)

| | |
|---|---|
| ASME A112.1.2 | (1991; R 2002) Air Gaps in Plumbing Systems |
| ASME A112.19.2M | (1998) Vitreous China Plumbing Fixtures |
| ASME A112.36.2M | (1991; R 2002) Cleanouts |

| | |
|---|---|
| ASME A112.6.1M | (1997; R 2002) Floor Affixed Supports for Off-the-Floor Plumbing Fixtures for Public Use |
| ASME A112.6.3 | (2000) Floor and Trench Drains |
| ASME B1.20.1 | (1983; R 2001) Pipe Threads, General Purpose, Inch |
| ASME B16.12 | (1998) Cast Iron Threaded Drainage Fittings |
| ASME B16.15 | (1985; R 1994) Cast Bronze Threaded Fittings Classes 125 and 250 |
| ASME B16.18 | (2002) Cast Copper Alloy Solder Joint Pressure Fittings |
| ASME B16.21 | (1992) Nonmetallic Flat Gaskets for Pipe Flanges |
| ASME B16.22 | (2002) Wrought Copper and Copper Alloy Solder Joint Pressure Fittings |
| ASME B16.23 | (2002) Cast Copper Alloy Solder Joint Drainage Fittings - DWV |
| ASME B16.24 | (2002) Cast Copper Alloy Pipe Flanges and Flanged Fittings: Classes 150, 300, 400, 600, 900, 1500, and 2500 |
| ASME B16.29 | (2002) Wrought Copper and Wrought Copper Alloy Solder Joint Drainage Fittings - DWV |
| ASME B16.3 | (1998) Malleable Iron Threaded Fittings |
| ASME B16.34 | (1996) Valves Flanged, Threaded, and Welding End |
| ASME B16.39 | (1998) Malleable Iron Threaded Pipe Unions |
| ASME B16.4 | (1998) Gray Iron Threaded Fittings |
| ASME B16.5 | (1996) Pipe Flanges and Flanged Fittings |
| ASME B31.1 | (2001) Power Piping |
| ASME B31.5 | (2001) Refrigeration Piping and Heat Transfer Components |
| ASME B40.100 | (1998a) Pressure Gauges and Gauge Attachments |

CAST IRON SOIL PIPE INSTITUTE (CISPI)

| | |
|---|---|
| CISPI 301 | (2000) Hubless Cast Iron Soil Pipe and Fittings for Sanitary and Storm Drain, Waste, and Vent Piping Applications |
| CISPI 310 | (1997) Coupling for Use in Connection with |

| | |
|---|---|
| | Hubless Cast Iron Soil Pipe and Fittings for Sanitary and Storm Drain, Waste, and Vent Piping Applications |
| CISPI HSN-85 | (1985) Neoprene Rubber Gaskets for Hub and Spigot Cast Iron Soil Pipe and Fittings |

COPPER DEVELOPMENT ASSOCIATION (CDA)

| | |
|---|---|
| CDA A4015 | (1994; R 1995) Copper Tube Handbook |

FOUNDATION FOR CROSS-CONNECTION CONTROL AND HYDRAULIC RESEARCH (FCCCHR)

| | |
|---|---|
| FCCCHR Manual | (9th Edition) Manual of Cross-Connection Control |

INTERNATIONAL CODE COUNCIL (ICC)

| | |
|---|---|
| ICC A117.1 | (2003) Accessible and Usable Buildings and Facilities |
| ICC IPC | (2000)International Plumbing Code |

MANUFACTURERS STANDARDIZATION SOCIETY OF THE VALVE AND FITTINGS INDUSTRY (MSS)

| | |
|---|---|
| MSS SP-110 | (1996) Ball Valves Threaded, Socket-Welding, Solder Joint, Grooved and Flared Ends |
| MSS SP-25 | (1998) Standard Marking System for Valves, Fittings, Flanges and Unions |
| MSS SP-44 | (1996; R 2001) Steel Pipe Line Flanges |
| MSS SP-58 | (1993) Pipe Hangers and Supports - Materials, Design and Manufacture |
| MSS SP-67 | (2002) Butterfly Valves |
| MSS SP-69 | (2002) Pipe Hangers and Supports - Selection and Application |
| MSS SP-70 | (1998) Cast Iron Gate Valves, Flanged and Threaded Ends |
| MSS SP-71 | (1997) Gray Iron Swing Check Valves, Flanged and Threaded Ends |
| MSS SP-72 | (1999) Ball Valves with Flanged or Butt-Welding Ends for General Service |
| MSS SP-73 | (1991; R 1996) Brazing Joints for Copper and Copper Alloy Pressure Fittings |
| MSS SP-78 | (1998) Cast Iron Plug Valves, Flanged and Threaded Ends |

| | |
|---|---|
| MSS SP-80 | (1997) Bronze Gate, Globe, Angle and Check Valves |
| MSS SP-85 | (1994) Cast Iron Globe & Angle Valves, Flanged and Threaded Ends |

NATIONAL FIRE PROTECTION ASSOCIATION (NFPA)

| | |
|---|---|
| NFPA 90A | (1999) Installation of Air Conditioning and Ventilating Systems |

NSF INTERNATIONAL (NSF)

| | |
|---|---|
| NSF 61 | (2001; Addendum 1 - Sep 2001) Drinking Water System Components - Health Effects |

PLUMBING AND DRAINAGE INSTITUTE (PDI)

| | |
|---|---|
| PDI WH 201 | (1992) Water Hammer Arresters |

U.S. NATIONAL ARCHIVES AND RECORDS ADMINISTRATION (NARA)

| | |
|---|---|
| 10 CFR 430 | Energy Conservation Program for Consumer Products |
| 40 CFR 50.12 | National Primary and Secondary Ambient Air Quality Standards for Lead |
| PL 93-523 | (1974; A 1999) Safe Drinking Water Act |

## 1.2 SUBMITTALS

Government approval is required for submittals with a "G" designation; submittals not having a "G" designation are for information only or as otherwise designated. When used, a designation following the "G" designation identifies the office that will review the submittal for the Government. The following shall be submitted in accordance with Section 01330 SUBMITTAL PROCEDURES:

SD-02 Shop Drawings

Plumbing System; G-AO.

Detail drawings consisting of illustrations, schedules, performance charts, instructions, brochures, diagrams, and other information to illustrate the requirements and operations of each system. Detail drawings for the complete plumbing system including piping layouts and locations of connections; dimensions for roughing-in, foundation, and support points; schematic diagrams and wiring diagrams or connection and interconnection diagrams. Detail drawings shall indicate clearances required for maintenance and operation. Where piping and equipment are to be supported other than as indicated, details shall include loadings and proposed support methods. Mechanical drawing plans, elevations, views, and details, shall be drawn to scale.

Electrical Work; G-AO.

Complete electrical schematic lineless or full line interconnection and connection diagram for each piece of mechanical equipment having more than one automatic or manual electrical control device.

SD-03 Product Data

Plumbing Fixture Schedule; G-AO.

Catalog cuts of specified plumbing fixtures valves system and system location where installed.

Plumbing System; G-AO.

Diagrams, instructions, and other sheets proposed for posting. Manufacturer's recommendations for the installation of bell and spigot and hubless joints for cast iron soil pipe.

SD-06 Test Reports

Tests, Flushing and Disinfection; G-AO.

Test reports in booklet form showing all field tests performed to adjust each component and all field tests performed to prove compliance with the specified performance criteria, completion and testing of the installed system. Each test report shall indicate the final position of controls.

SD-07 Certificates

Materials and Equipment; .

Where materials or equipment are specified to comply with requirements of AGA, ASME, or NSF proof of such compliance shall be included. The label or listing of the specified agency will be acceptable evidence. In lieu of the label or listing, a written certificate may be submitted from an approved, nationally recognized testing organization equipped to perform such services, stating that the items have been tested and conform to the requirements and testing methods of the specified agency. Where equipment is specified to conform to requirements of the ASME Boiler and Pressure Vessel Code, the design, fabrication, and installation shall conform to the code.

Bolts; G-AO.

Written certification by the bolt manufacturer that the bolts furnished comply with the specified requirements. The certification shall include illustrations of product-required markings, the date of manufacture, and the number of each type of bolt to be furnished based on this certification.

SD-10 Operation and Maintenance Data

Plumbing System; G-AO.

Six copies of the operation manual outlining the step-by-step

procedures required for system startup, operation and shutdown. The manual shall include the manufacturer's name, model number, service manual, parts list, and brief description of all equipment and their basic operating features. Six copies of the maintenance manual listing routine maintenance procedures, possible breakdowns and repairs. The manual shall include piping and equipment layout and simplified wiring and control diagrams of the system as installed.

## 1.3 STANDARD PRODUCTS

Specified materials and equipment shall be standard products of a manufacturer regularly engaged in the manufacture of such products. Specified equipment shall essentially duplicate equipment that has performed satisfactorily at least two years prior to bid opening.

## 1.4 ELECTRICAL WORK

Motors, motor controllers and motor efficiencies shall conform to the requirements of Section 16415A ELECTRICAL WORK, INTERIOR. Electrical motor-driven equipment specified herein shall be provided complete with motors. Equipment shall be rated at 60 Hz, single phase, ac unless otherwise indicated. Where a motor controller is not provided in a motor-control center on the electrical drawings, a motor controller shall be as indicated. Motor controllers shall be provided complete with properly sized thermal-overload protection in each ungrounded conductor, auxiliary contact, and other equipment, at the specified capacity, and including an allowable service factor.

## 1.5 PERFORMANCE REQUIREMENTS

## 1.6 REGULATORY REQUIREMENTS

Unless otherwise required herein, plumbing work shall be in accordance with ICC IPC.

## 1.7 PROJECT/SITE CONDITIONS

The Contractor shall become familiar with details of the work, verify dimensions in the field, and advise the Contracting Officer of any discrepancy before performing any work.

# PART 2 PRODUCTS

## 2.1 MATERIALS

Materials for various services shall be in accordance with TABLES I and II. Pipe schedules shall be selected based on service requirements. Pipe fittings shall be compatible with the applicable pipe materials. Pipe threads (except dry seal) shall conform to ASME B1.20.1. Grooved pipe couplings and fittings shall be from the same manufacturer. Material or equipment containing lead shall not be used in any potable water system. In line devices such as water meters, building valves, check valves, meter stops, valves, fittings and back flow preventers shall comply with PL 93-523 and NSF 61, Section 8. End point devices such as drinking water fountains, lavatory faucets, kitchen and bar faucets, residential ice makers, supply stops and end point control valves used to dispense water for drinking must meet the requirements of NSF 61, Section 9. Hubless cast-iron soil pipe shall not be installed underground, under concrete

floor slabs, or in crawl spaces below kitchen floors.

2.1.1 Pipe Joint Materials

Grooved pipe and hubless cast-iron soil pipe shall not be used. Joints and gasket materials shall conform to the following:

a. Coupling for Cast-Iron Pipe: for hub and spigot type ASTM A 74, AWWA C606. For hubless type: CISPI 310

b. Coupling for Steel Pipe: AWWA C606.

c. Flange Gaskets: Gaskets shall be made of non-asbestos material in accordance with ASME B16.21. Gaskets shall be flat, 1/16 inch thick, and contain Aramid fibers bonded with Styrene Butadiene Rubber (SBR) or Nitro Butadiene Rubber (NBR). Gaskets shall be the full face or self centering flat ring type. Gaskets used for hydrocarbon service shall be bonded with NBR.

d. Neoprene Gaskets for Hub and Cast-Iron Pipe and Fittings: CISPI HSN-85.

e. Brazing Material: Brazing material shall conform to AWS A5.8, BCuP-5.

f. Brazing Flux: Flux shall be in paste or liquid form appropriate for use with brazing material. Flux shall be as follows: lead-free; have a 100 percent flushable residue; contain slightly acidic reagents; contain potassium borides; and contain fluorides.

g. Solder Material: Solder metal shall conform to ASTM B 32.

h. Solder Flux: Flux shall be liquid form, non-corrosive, and conform to ASTM B 813, Standard Test 1.

i. PTFE Tape: PTFE Tape, for use with Threaded Metal or Plastic Pipe, ASTM D 3308.

j. Rubber Gaskets for Cast-Iron Soil-Pipe and Fittings (hub and spigot type and hubless type): ASTM C 564.

k. Flanged fittings including flanges, bolts, nuts, bolt patterns, etc., shall be in accordance with ASME B16.5 class 150 and shall have the manufacturer's trademark affixed in accordance with MSS SP-25. Flange material shall conform to ASTM A 105/A 105M. Blind flange material shall conform to ASTM A 516/A 516M cold service and ASTM A 515/A 515M for hot service. Bolts shall be high strength or intermediate strength with material conforming to ASTM A 193/A 193M.

2.1.2 Miscellaneous Materials

Miscellaneous materials shall conform to the following:

a. Water Hammer Arrester: PDI WH 201.

b. Copper, Sheet and Strip for Building Construction: ASTM B 370.

c. Asphalt Roof Cement: ASTM D 2822.

e. Supports for Off-The-Floor Plumbing Fixtures: ASME A112.6.1M.

f. Metallic Cleanouts: ASME A112.36.2M.

g. Plumbing Fixture Setting Compound: A preformed flexible ring seal molded from hydrocarbon wax material. The seal material shall be nonvolatile nonasphaltic and contain germicide and provide watertight, gastight, odorproof and verminproof properties.

h. Coal-Tar Protective Coatings and Linings for Steel Water Pipelines: AWWA C203.

i. Hypochlorites: AWWA B300.

j. Liquid Chlorine: AWWA B301.

k. Polyethylene Encasement for Ductile-Iron Piping: AWWA C105.

l. Gauges - Pressure and Vacuum Indicating Dial Type - Elastic Element: ASME B40.100.

m. Thermometers: ASTM E 1. Mercury shall not be used in thermometers.

### 2.1.3 Pipe Insulation Material

Insulation shall be as specified in Section 15080A THERMAL INSULATION FOR MECHANICAL SYSTEMS.

## 2.2 PIPE HANGERS, INSERTS, AND SUPPORTS

Pipe hangers, inserts, and supports shall conform to MSS SP-58 and MSS SP-69.

## 2.3 VALVES

Valves shall be provided on supplies to equipment and fixtures. Valves 2-1/2 inches and smaller shall be bronze with threaded bodies for pipe and solder-type connections for tubing. Valves 3 inches and larger shall have flanged iron bodies and bronze trim. Pressure ratings shall be based upon the application. Grooved end valves may be provided if the manufacturer certifies that the valves meet the performance requirements of applicable MSS standard. Valves shall conform to the following standards:

| Description | Standard |
|---|---|
| Butterfly Valves | MSS SP-67 |
| Cast-Iron Gate Valves, Flanged and Threaded Ends | MSS SP-70 |
| Cast-Iron Swing Check Valves, Flanged and Threaded Ends | MSS SP-71 |
| Ball Valves with Flanged Butt-Welding Ends for General Service | MSS SP-72 |
| Ball Valves Threaded, Socket-Welding, | |

| Description | Standard |
|---|---|
| Solder Joint, Grooved and Flared Ends | MSS SP-110 |
| Cast-Iron Plug Valves, Flanged and Threaded Ends | MSS SP-78 |
| Bronze Gate, Globe, Angle, and Check Valves | MSS SP-80 |
| Steel Valves, Socket Welding and Threaded Ends | ASME B16.34 |
| Cast-Iron Globe and Angle Valves, Flanged and Threaded Ends | MSS SP-85 |
| Water Heater Drain Valves | ASSE 1005 |
| Temperature and Pressure Relief Valves for Hot Water Supply Systems | ANSI Z21.22 |

2.3.1 Wall Hydrants

Wall hydrants with vacuum-breaker backflow preventer shall have a nickel-brass or nickel-bronze wall plate or flange with nozzle and detachable key handle. A brass or bronze operating rod shall be provided within a galvanized iron casing of sufficient length to extend through the wall so that the valve is inside the building, and the portion of the hydrant between the outlet and valve is self-draining. A brass or bronze valve with coupling and union elbow having metal-to-metal seat shall be provided. Valve rod and seat washer shall be removable through the face of the hydrant. The hydrant shall have 3/4 inch exposed hose thread on spout and 3/4 inch male pipe thread on inlet. Wall hydrants shall be frost proof.

2.3.2 Relief Valves

Water heaters and hot water storage tanks shall have a combination pressure and temperature (P&T) relief valve. The pressure relief element of a P&T relief valve shall have adequate capacity to prevent excessive pressure buildup in the system when the system is operating at the maximum rate of heat input. The temperature element of a P&T relief valve shall have a relieving capacity which is at least equal to the total input of the heaters when operating at their maximum capacity. Relief valves shall be rated according to ANSI Z21.22. Relief valves for systems where the maximum rate of heat input is less than 200,000 Btuh shall have 3/4 inch minimum inlets, and 3/4 inch outlets. Relief valves for systems where the maximum rate of heat input is greater than 200,000 Btuh shall have 1 inch minimum inlets, and 1 inch outlets. The discharge pipe from the relief valve shall be the size of the valve outlet.

2.3.3 Thermostatic Mixing Valves

Mixing valves, thermostatic type, pressure-balanced or combination thermostatic and pressure-balanced shall be line size and shall be constructed with rough or finish bodies either with or without plating. Each valve shall be constructed to control the mixing of hot and cold water and to deliver water at a desired temperature regardless of pressure or input temperature changes. The control element shall be of an approved

type. The body shall be of heavy cast bronze, and interior parts shall be brass, bronze, corrosion-resisting steel or copper. The valve shall be equipped with necessary stops, check valves, unions, and sediment strainers on the inlets. Mixing valves shall maintain water temperature within 5 degrees F of any setting.

## 2.4 FIXTURES

Fixtures shall be water conservation type, in accordance with ICC IPC. Fixtures for use by the physically handicapped shall be in accordance with ICC A117.1. Vitreous china, nonabsorbent, hard-burned, and vitrified throughout the body shall be provided. Porcelain enameled ware shall have specially selected, clear white, acid-resisting enamel coating evenly applied on surfaces. No fixture will be accepted that shows cracks, crazes, blisters, thin spots, or other flaws. Fixtures shall be equipped with appurtenances such as traps, faucets, stop valves, and drain fittings. Each fixture and piece of equipment requiring connections to the drainage system, except grease interceptors, shall be equipped with a trap. Brass expansion or toggle bolts capped with acorn nuts shall be provided for supports, and polished chromium-plated pipe, valves, and fittings shall be provided where exposed to view. Fixtures with the supply discharge below the rim shall be equipped with backflow preventers. Internal parts of flush and/or flushometer valves, shower mixing valves, shower head face plates, pop-up stoppers of lavatory waste drains, and pop-up stoppers and overflow tees and shoes of bathtub waste drains may contain acetal resin, fluorocarbon, nylon, acrylonitrile-butadiene-styrene (ABS) or other plastic material, if the material has provided satisfactory service under actual commercial or industrial operating conditions for not less than 2 years. Plastic in contact with hot water shall be suitable for 180 degrees F water temperature. Plumbing fixtures shall be as indicated in paragraph PLUMBING FIXTURE SCHEDULE.

## 2.5 BACKFLOW PREVENTERS

Backflow preventers shall be approved and listed by the Foundation For Cross-Connection Control & Hydraulic Research. Reduced pressure principle assemblies, double check valve assemblies, atmospheric (nonpressure) type vacuum breakers, and pressure type vacuum breakers shall be tested, approved, and listed in accordance with FCCCHR Manual. Backflow preventers with intermediate atmospheric vent shall conform to ASSE 1012. Reduced pressure principle backflow preventers shall conform to ASSE 1013. Hose connection vacuum breakers shall conform to ASSE 1011. Pipe applied atmospheric type vacuum breakers shall conform to ASSE 1001. Pressure vacuum breaker assembly shall conform to ASSE 1020. Air gaps in plumbing systems shall conform to ASME A112.1.2.

## 2.6 DRAINS

### 2.6.1 Floor Drains

Floor drains shall consist of a galvanized body, integral seepage pan, and adjustable perforated or slotted chromium-plated bronze, nickel-bronze, or nickel-brass strainer, consisting of grate and threaded collar. Floor drains shall be cast iron except where metallic waterproofing membrane is installed. Drains shall be of double drainage pattern for embedding in the floor construction. The seepage pan shall have weep holes or channels for drainage to the drainpipe. The strainer shall be adjustable to floor thickness. A clamping device for attaching flashing or waterproofing membrane to the seepage pan without damaging the flashing or waterproofing

membrane shall be provided when required. Drains shall be provided with threaded connection. Between the drain outlet and waste pipe, a neoprene rubber gasket conforming to ASTM C 564 may be installed, provided that the drain is specifically designed for the rubber gasket compression type joint. Floor and shower drains shall conform to ASME A112.6.3.

## 2.7 TRAPS

Unless otherwise specified, copper-alloy adjustable tube type with slip joint inlet and swivel. Traps shall be without a cleanout. Tubes shall be copper alloy with walls not less than 0.032 inch thick within commercial tolerances, except on the outside of bends where the thickness may be reduced slightly in manufacture by usual commercial methods. Inlets shall have rubber washer and copper alloy nuts for slip joints above the discharge level. Swivel joints shall be below the discharge level and shall be of metal-to-metal or metal-to-plastic type as required for the application. Nuts shall have flats for wrench grip. Outlets shall have internal pipe thread, except that when required for the application, the outlets shall have sockets for solder-joint connections. The depth of the water seal shall be not less than 2 inches. The interior diameter shall be not more than 1/8 inch over or under the nominal size, and interior surfaces shall be reasonably smooth throughout. A copper alloy "P" trap assembly consisting of an adjustable "P" trap and threaded trap wall nipple with cast brass wall flange shall be provided for lavatories. The assembly shall be a standard manufactured unit and may have a rubber-gasketed swivel joint.

## 2.8 WATER HEATERS

Water heater types and capacities shall be as indicated. Each water heater shall have replaceable anodes. Each primary water heater shall have controls with an adjustable range that includes 90 to 160degrees F. The thermal efficiencies and standby heat losses shall conform to TABLE III for each type of water heater specified.

### 2.8.1 Automatic Storage Type

Heaters shall be complete with control system, and shall have ASME rated combination pressure and temperature relief valve.

#### 2.8.1.1 Electric Type

Electric water heaters shall be UL certified. Heaters shall have 150 psi working pressure and shall include high density anode. Internal surfaces exposed to water shall be glass-lined, with lining heat fused to steel tank. Tank shall conform to ASME construction standards. Heating elements shall be low-watt density and each element shall be controlled by an individually mounted thermostat with high-temperature cut-off switch. All internal circuits shall be fused. The outer jacket shall be finished in baked enamel, shall enclose the foam-insulated tank, and shall house a full size control compartment for maintenance. Unit shall include drain valve and relief valve as specified elsewhere in this Section.

# PART 3 EXECUTION

## 3.1 GENERAL INSTALLATION REQUIREMENTS

Piping located in air plenums shall conform to NFPA 90A requirements.

Piping located in shafts that constitute air ducts or that enclose air ducts shall be noncombustible in accordance with NFPA 90A. The plumbing system shall be installed complete with necessary fixtures, fittings, traps, valves, and accessories. Water and drainage piping shall be extended 5 feet outside the building, unless otherwise indicated. A gate valve and drain shall be installed on the water service line inside the building approximately 6 inches above the floor from point of entry. Piping shall be connected to the exterior service lines or capped or plugged if the exterior service is not in place. Sewer and water pipes shall be laid in separate trenches, except when otherwise shown. Exterior underground utilities shall be at least 12 inches below the average local frost depth or as indicated on the drawings. If trenches are closed or the pipes are otherwise covered before being connected to the service lines, the location of the end of each plumbing utility shall be marked with a stake or other acceptable means. Valves shall be installed with control no lower than the valve body.

3.1.1 Water Pipe, Fittings, and Connections

3.1.1.1 Utilities

The piping shall be extended to fixtures, outlets, and equipment. The hot-water and cold-water piping system shall be arranged and installed to permit draining. The supply line to each item of equipment or fixture, except faucets, flush valves, or other control valves which are supplied with integral stops, shall be equipped with a shutoff valve to enable isolation of the item for repair and maintenance without interfering with operation of other equipment or fixtures. Supply piping to fixtures, faucets, hydrants, shower heads, and flushing devices shall be anchored to prevent movement.

3.1.1.2 Cutting and Repairing

The work shall be carefully laid out in advance, and unnecessary cutting of construction shall be avoided. Damage to building, piping, wiring, or equipment as a result of cutting shall be repaired by mechanics skilled in the trade involved.

3.1.1.3 Protection of Fixtures, Materials, and Equipment

Pipe openings shall be closed with caps or plugs during installation. Fixtures and equipment shall be tightly covered and protected against dirt, water, chemicals, and mechanical injury. Upon completion of the work, the fixtures, materials, and equipment shall be thoroughly cleaned, adjusted, and operated. Safety guards shall be provided for exposed rotating equipment.

3.1.1.4 Mains, Branches, and Runouts

Piping shall be installed as indicated. Pipe shall be accurately cut and worked into place without springing or forcing. Structural portions of the building shall not be weakened. Aboveground piping shall run parallel with the lines of the building, unless otherwise indicated. Branch pipes from service lines may be taken from top, bottom, or side of main, using crossover fittings required by structural or installation conditions. Supply pipes, valves, and fittings shall be kept a sufficient distance from other work and other services to permit not less than 1/2 inch between finished covering on the different services. Bare and insulated water lines shall not bear directly against building structural elements so as to

transmit sound to the structure or to prevent flexible movement of the lines. Water pipe shall not be buried in or under floors unless specifically indicated or approved. Changes in pipe sizes shall be made with reducing fittings. Use of bushings will not be permitted except for use in situations in which standard factory fabricated components are furnished to accommodate specific accepted installation practice. Change in direction shall be made with fittings, except that bending of pipe 4 inches and smaller will be permitted, provided a pipe bender is used and wide sweep bends are formed. The center-line radius of bends shall be not less than six diameters of the pipe. Bent pipe showing kinks, wrinkles, flattening, or other malformations will not be acceptable.

3.1.1.5 Pipe Drains

Pipe drains indicated shall consist of 3/4 inch hose bibb with renewable seat and gate valve ahead of hose bibb. At other low points, 3/4 inch brass plugs or caps shall be provided. Disconnection of the supply piping at the fixture is an acceptable drain.

3.1.1.6 Expansion and Contraction of Piping

Allowance shall be made throughout for expansion and contraction of water pipe. Each hot-water riser shall have expansion loops or other provisions such as offsets, changes in direction, etc., where indicated and/or required. Risers shall be securely anchored as required or where indicated to force expansion to loops. Branch connections from risers shall be made with ample swing or offset to avoid undue strain on fittings or short pipe lengths. Horizontal runs of pipe over 50 feet in length shall be anchored to the wall or the supporting construction about midway on the run to force expansion, evenly divided, toward the ends. Sufficient flexibility shall be provided on branch runouts from mains and risers to provide for expansion and contraction of piping. Flexibility shall be provided by installing one or more turns in the line so that piping will spring enough to allow for expansion without straining. If mechanical grooved pipe coupling systems are provided, the deviation from design requirements for expansion and contraction may be allowed pending approval of Contracting Officer.

3.1.1.7 Commercial-Type Water Hammer Arresters

Commercial-type water hammer arresters shall be provided on hot- and cold-water supplies and shall be located as generally indicated, with precise location and sizing to be in accordance with PDI WH 201. Water hammer arresters, where concealed, shall be accessible by means of access doors or removable panels. Commercial-type water hammer arresters shall conform to PDI WH 201. Vertical capped pipe columns will not be permitted.

3.1.2 Joints

Installation of pipe and fittings shall be made in accordance with the manufacturer's recommendations. Mitering of joints for elbows and notching of straight runs of pipe for tees will not be permitted. Joints shall be made up with fittings of compatible material and made for the specific purpose intended.

3.1.2.1 Threaded

Threaded joints shall have American Standard taper pipe threads conforming to ASME B1.20.1. Only male pipe threads shall be coated with graphite or

with an approved graphite compound, or with an inert filler and oil, or shall have a polytetrafluoroethylene tape applied.

3.1.2.2 Unions and Flanges

Unions, flanges and mechanical couplings shall not be concealed in walls, ceilings, or partitions. Unions shall be used on pipe sizes 2-1/2 inches and smaller; flanges shall be used on pipe sizes 3 inches and larger.

3.1.2.3 Grooved Mechanical Joints

Grooves shall be prepared according to the coupling manufacturer's instructions. Grooved fittings, couplings, and grooving tools shall be products of the same manufacturer. Pipe and groove dimensions shall comply with the tolerances specified by the coupling manufacturer. The diameter of grooves made in the field shall be measured using a "go/no-go" gauge, vernier or dial caliper, narrow-land micrometer, or other method specifically approved by the coupling manufacturer for the intended application. Groove width and dimension of groove from end of pipe shall be measured and recorded for each change in grooving tool setup to verify compliance with coupling manufacturer's tolerances. Grooved joints shall not be used in concealed locations.

3.1.2.4 Cast Iron Soil, Waste and Vent Pipe

Bell and spigot compression and hubless gasketed clamp joints for soil, waste and vent piping shall be installed per the manufacturer's recommendations.

3.1.2.5 Copper Tube and Pipe

The tube or fittings shall not be annealed when making connections.

a. Brazed. Brazed joints shall be made in conformance with AWS B2.2, MSS SP-73, and CDA A4015 with flux and are acceptable for all pipe sizes. Copper to copper joints shall include the use of copper-phosphorus or copper-phosphorus-silver brazing metal without flux. Brazing of dissimilar metals (copper to bronze or brass) shall include the use of flux with either a copper-phosphorus, copper-phosphorus-silver or a silver brazing filler metal.

b. Soldered. Soldered joints shall be made with flux and are only acceptable for piping 2 inches and smaller. Soldered joints shall conform to ASME B31.5 and CDA A4015. Soldered joints shall not be used in compressed air piping between the air comppressor and the receiver.

c. Copper Tube Extracted Joint. Mechanically extracted joints shall be made in accordance with ICC IPC.

3.1.2.6 Other Joint Methods

3.1.3 Dissimilar Pipe Materials

Connections between ferrous and non-ferrous copper water pipe shall be made with dielectric unions or flange waterways. Dielectric waterways shall have temperature and pressure rating equal to or greater than that specified for the connecting piping. Waterways shall have metal

connections on both ends suited to match connecting piping. Dielectric waterways shall be internally lined with an insulator specifically designed to prevent current flow between dissimilar metals. Dielectric flanges shall meet the performance requirements described herein for dielectric waterways. Connecting joints between plastic and metallic pipe shall be made with transition fitting for the specific purpose.

### 3.1.4 Corrosion Protection for Buried Pipe and Fittings

#### 3.1.4.1 Cast Iron and Ductile Iron

Pressure pipe shall have protective coating, a cathodic protection system, and joint bonding. Pipe, fittings, and joints shall have a protective coating. The protective coating shall be completely encasing polyethylene tube or sheet in accordance with AWWA C105. Joints and fittings shall be cleaned, coated with primer, and wrapped with tape. The pipe shall be cleaned, coated, and wrapped prior to pipe tightness testing. Joints and fittings shall be cleaned, coated, and wrapped after pipe tightness testing. Tape shall conform to AWWA C203 and shall be applied with a 50 percent overlap. Primer shall be as recommended by the tape manufacturer.

#### 3.1.4.2 Steel

Steel pipe, joints, and fittings shall be cleaned, coated with primer, and wrapped with tape. Pipe shall be cleaned, coated, and wrapped prior to pipe tightness testing. Joints and fittings shall be cleaned, coated, and wrapped after pipe tightness testing. Tape shall conform to AWWA C203 and shall be applied with a 50 percent overlap. Primer shall be as recommended by the tape manufacturer.

### 3.1.5 Pipe Sleeves and Flashing

Pipe sleeves shall be furnished and set in their proper and permanent location.

#### 3.1.5.1 Sleeve Requirements

Pipes passing through concrete or masonry walls or concrete floors or roofs shall be provided with pipe sleeves fitted into place at the time of construction. Sleeves are not required for supply, drainage, waste and vent pipe passing through concrete slab on grade, except where penetrating a membrane waterproof floor. A modular mechanical type sealing assembly may be installed in lieu of a waterproofing clamping flange and caulking and sealing of annular space between pipe and sleeve. The seals shall consist of interlocking synthetic rubber links shaped to continuously fill the annular space between the pipe and sleeve using galvanized steel bolts, nuts, and pressure plates. The links shall be loosely assembled with bolts to form a continuous rubber belt around the pipe with a pressure plate under each bolt head and each nut. After the seal assembly is properly positioned in the sleeve, tightening of the bolt shall cause the rubber sealing elements to expand and provide a watertight seal between the pipe and the sleeve. Each seal assembly shall be sized as recommended by the manufacturer to fit the pipe and sleeve involved. Sleeves shall not be installed in structural members, except where indicated or approved. Rectangular and square openings shall be as detailed. Each sleeve shall extend through its respective floor, or roof, and shall be cut flush with each surface, except for special circumstances. Pipe sleeves passing through floors in wet areas such as mechanical equipment rooms, lavatories, kitchens, and other plumbing fixture areas shall extend a minimum of 4

inches above the finished floor. Unless otherwise indicated, sleeves shall be of a size to provide a minimum of 1/4 inch clearance between bare pipe or insulation and inside of sleeve or between insulation and inside of sleeve. Sleeves in bearing walls and concrete slab on grade floors shall be steel pipe or cast-iron pipe. Sleeves in nonbearing walls or ceilings may be steel pipe, cast-iron pipe, galvanized sheet metal with lock-type longitudinal seam, or plastic. Except as otherwise specified, the annular space between pipe and sleeve, or between jacket over insulation and sleeve, shall be sealed as indicated with sealants conforming to ASTM C 920 and with a primer, backstop material and surface preparation as specified in Section 07900A JOINT SEALING. The annular space between pipe and sleeve, between bare insulation and sleeve or between jacket over insulation and sleeve shall not be sealed for interior walls which are not designated as fire rated. Sleeves through below-grade walls in contact with earth shall be recessed 1/2 inch from wall surfaces on both sides. Annular space between pipe and sleeve shall be filled with backing material and sealants in the joint between the pipe and masonry wall as specified above. Sealant selected for the earth side of the wall shall be compatible with dampproofing/waterproofing materials that are to be applied over the joint sealant. Pipe sleeves in fire-rated walls shall conform to the requirements in Section 07840 FIRESTOPPING.

3.1.5.2 Flashing Requirements

Pipes passing through roof shall be installed through a 16 ounce copper flashing, each within an integral skirt or flange. Flashing shall be suitably formed, and the skirt or flange shall extend not less than 8 inches from the pipe and shall be set over the roof or floor membrane in a solid coating of bituminous cement. The flashing shall extend up the pipe a minimum of 10 inches. For cleanouts, the flashing shall be turned down into the hub and caulked after placing the ferrule. Pipes passing through pitched roofs shall be flashed, using lead or copper flashing, with an adjustable integral flange of adequate size to extend not less than 8 inches from the pipe in all directions and lapped into the roofing to provide a watertight seal. The annular space between the flashing and the bare pipe or between the flashing and the metal-jacket-covered insulation shall be sealed as indicated. Flashing for dry vents shall be turned down into the pipe to form a waterproof joint. Pipes, up to and including 10 inches in diameter, passing through roof or floor waterproofing membrane may be installed through a cast-iron sleeve with caulking recess, anchor lugs, flashing-clamp device, and pressure ring with brass bolts. Flashing shield shall be fitted into the sleeve clamping device. Pipes passing through wall waterproofing membrane shall be sleeved as described above. A waterproofing clamping flange shall be installed.

3.1.5.3 Waterproofing

Waterproofing at floor-mounted water closets shall be accomplished by forming a flashing guard from soft-tempered sheet copper. The center of the sheet shall be perforated and turned down approximately 1-1/2 inches to fit between the outside diameter of the drainpipe and the inside diameter of the cast-iron or steel pipe sleeve. The turned-down portion of the flashing guard shall be embedded in sealant to a depth of approximately 1-1/2 inches; then the sealant shall be finished off flush to floor level between the flashing guard and drainpipe. The flashing guard of sheet copper shall extend not less than 8 inches from the drainpipe and shall be lapped between the floor membrane in a solid coating of bituminous cement. If cast-iron water closet floor flanges are used, the space between the pipe sleeve and drainpipe shall be sealed with sealant and the flashing

guard shall be upturned approximately 1-1/2 inches to fit the outside diameter of the drainpipe and the inside diameter of the water closet floor flange. The upturned portion of the sheet fitted into the floor flange shall be sealed.

3.1.5.4 Optional Counterflashing

Instead of turning the flashing down into a dry vent pipe, or caulking and sealing the annular space between the pipe and flashing or metal-jacket-covered insulation and flashing, counterflashing may be accomplished by utilizing the following:

a. A standard roof coupling for threaded pipe up to 6 inches in diameter.

b. A tack-welded or banded-metal rain shield around the pipe.

3.1.5.5 Pipe Penetrations of Slab on Grade Floors

Where pipes, fixture drains, floor drains, cleanouts or similar items penetrate slab on grade floors, except at penetrations of floors with waterproofing membrane as specified in paragraphs Flashing Requirements and Waterproofing, a groove 1/4 to 1/2 inch wide by 1/4 to 3/8 inch deep shall be formed around the pipe, fitting or drain. The groove shall be filled with a sealant as specified in Section 07900A JOINT SEALING.

3.1.6 Fire Seal

Where pipes pass through fire walls, fire-partitions, fire-rated pipe chase walls or floors above grade, a fire seal shall be provided as specified in Section 07840 FIRESTOPPING.

3.1.7 Supports

3.1.7.1 General

Hangers used to support piping 2 inches and larger shall be fabricated to permit adequate adjustment after erection while still supporting the load. Pipe guides and anchors shall be installed to keep pipes in accurate alignment, to direct the expansion movement, and to prevent buckling, swaying, and undue strain. Piping subjected to vertical movement when operating temperatures exceed ambient temperatures shall be supported by variable spring hangers and supports or by constant support hangers. In the support of multiple pipe runs on a common base member, a clip or clamp shall be used where each pipe crosses the base support member. Spacing of the base support members shall not exceed the hanger and support spacing required for an individual pipe in the multiple pipe run. Threaded sections of rods shall not be formed or bent.

3.1.7.2 Pipe Supports and Structural Bracing, Force Protection Requirements

Structural steel required for reinforcement to properly support piping, headers, and equipment, but not shown, shall be provided. Material used for supports shall be as specified in Section 05120 STRUCTURAL STEEL.

3.1.7.3 Pipe Hangers, Inserts, and Supports

Installation of pipe hangers, inserts and supports shall conform to MSS SP-58 and MSS SP-69, except as modified herein.

a. Types 5, 12, and 26 shall not be used.

b. Type 3 shall not be used on insulated pipe.

c. Type 18 inserts shall be secured to concrete forms before concrete is placed. Continuous inserts which allow more adjustment may be used if they otherwise meet the requirements for type 18 inserts.

d. Type 19 and 23 C-clamps shall be torqued per MSS SP-69 and shall have both locknuts and retaining devices furnished by the manufacturer. Field-fabricated C-clamp bodies or retaining devices are not acceptable.

e. Type 20 attachments used on angles and channels shall be furnished with an added malleable-iron heel plate or adapter.

f. Type 24 may be used only on trapeze hanger systems or on fabricated frames.

Type 40 shields shall:

(1) Be used on insulated pipe less than 4 inches.

(2) Be used on insulated pipe 4 inches and larger when the temperature of the medium is 60 degrees F or less.

(3) Have a high density insert for all pipe sizes. High density inserts shall have a density of 8 pcf or greater.

h. Horizontal pipe supports shall be spaced as specified in MSS SP-69 and a support shall be installed not over 1 foot from the pipe fitting joint at each change in direction of the piping. Pipe supports shall be spaced not over 5 feet apart at valves. Operating temperatures in determining hanger spacing for PVC or CPVC pipe shall be 120 degrees F for PVC and 180 degrees F for CPVC. Horizontal pipe runs shall include allowances for expansion and contraction.

i. Type 35 guides using steel, reinforced polytetrafluoroethylene (PTFE) or graphite slides shall be provided to allow longitudinal pipe movement. Slide materials shall be suitable for the system operating temperatures, atmospheric conditions, and bearing loads encountered. Lateral restraints shall be provided as needed. Where steel slides do not require provisions for lateral restraint the following may be used:

(1)
On pipe less than 4 inches a Type 40 shield, attached to the pipe or insulation, may freely rest on a steel plate.

j. Pipe hangers on horizontal insulated pipe shall be the size of the outside diameter of the insulation. The insulation shall be continuous through the hanger on all pipe sizes and applications.

k. Where there are high system temperatures and welding to piping is not desirable, the type 35 guide shall include a pipe cradle, welded to the guide structure and strapped securely to the pipe.

The pipe shall be separated from the slide material by at least 4 inches or by an amount adequate for the insulation, whichever is greater.

l. Hangers and supports for plastic pipe shall not compress, distort, cut or abrade the piping, and shall allow free movement of pipe except where otherwise required in the control of expansion/contraction.

3.1.7.4 Structural Attachments

Attachment to building structure concrete and masonry shall be by cast-in concrete inserts, built-in anchors, or masonry anchor devices. Inserts and anchors shall be applied with a safety factor not less than 5. Supports shall not be attached to metal decking. Supports shall not be attached to the underside of concrete filled floor or concrete roof decks unless approved by the Contracting Officer. Masonry anchors for overhead applications shall be constructed of ferrous materials only.

3.1.8 Welded Installation

Plumbing pipe weldments shall be as indicated. Changes in direction of piping shall be made with welding fittings only; mitering or notching pipe to form elbows and tees or other similar type construction will not be permitted. Branch connection may be made with either welding tees or forged branch outlet fittings. Branch outlet fittings shall be forged, flared for improvement of flow where attached to the run, and reinforced against external strains. Beveling, alignment, heat treatment, and inspection of weld shall conform to ASME B31.1. Weld defects shall be removed and repairs made to the weld, or the weld joints shall be entirely removed and rewelded. After filler metal has been removed from its original package, it shall be protected or stored so that its characteristics or welding properties are not affected. Electrodes that have been wetted or that have lost any of their coating shall not be used.

3.1.9 Pipe Cleanouts

Pipe cleanouts shall be the same size as the pipe except that cleanout plugs larger than 4 inches will not be required. A cleanout installed in connection with cast-iron soil pipe shall consist of a long-sweep 1/4 bend or one or two 1/8 bends extended to the place shown. An extra-heavy cast-brass or cast-iron ferrule with countersunk cast-brass head screw plug shall be caulked into the hub of the fitting and shall be flush with the floor. Cleanouts in connection with other pipe, where indicated, shall be T-pattern, 90-degree branch drainage fittings with cast-brass screw plugs, except plastic plugs shall be installed in plastic pipe. Plugs shall be the same size as the pipe up to and including 4 inches. Cleanout tee branches with screw plug shall be installed at the foot of soil and waste stacks, at the foot of interior downspouts, on each connection to building storm drain where interior downspouts are indicated, and on each building drain outside the building. Cleanout tee branches may be omitted on stacks in single story buildings with slab-on-grade construction or where less than 18 inches of crawl space is provided under the floor. Cleanouts on pipe concealed in partitions shall be provided with chromium plated bronze, nickel bronze, nickel brass or stainless steel flush type access cover plates. Round access covers shall be provided and secured to plugs with securing screw. Square access covers may be provided with matching frames, anchoring lugs and cover screws. Cleanouts in finished walls shall have access covers and frames installed flush with the finished wall. Cleanouts

installed in finished floors subject to foot traffic shall be provided with a chrome-plated cast brass, nickel brass, or nickel bronze cover secured to the plug or cover frame and set flush with the finished floor. Heads of fastening screws shall not project above the cover surface. Where cleanouts are provided with adjustable heads, the heads shall be cast iron .

## 3.2 WATER HEATERS AND HOT WATER STORAGE TANKS

### 3.2.1 Relief Valves

No valves shall be installed between a relief valve and its water heater or storage tank. The P&T relief valve shall be installed where the valve actuator comes in contact with the hottest water in the heater. Whenever possible, the relief valve shall be installed directly in a tapping in the tank or heater; otherwise, the P&T valve shall be installed in the hot-water outlet piping. A vacuum relief valve shall be provided on the cold water supply line to the hot-water storage tank or water heater and mounted above and within 6 inches above the top of the tank or water heater.

### 3.2.2 Installation of Electric Water Heaters

Electric water heaters shall be installed per manufacturer's instructions and in accordance with specification; Division 16.

### 3.2.3 Heat Traps

Piping to and from each water heater shall be routed horizontally and downward a minimum of 2 feet before turning in an upward direction.

### 3.2.4 Connections to Water Heaters

Connections of metallic pipe to water heaters shall be made with dielectric unions or flanges.

## 3.3 FIXTURES AND FIXTURE TRIMMINGS

Polished chromium-plated pipe, valves, and fittings shall be provided where exposed to view. Angle stops, straight stops, stops integral with the faucets, or concealed type of lock-shield, and loose-key pattern stops for supplies with threaded, sweat or solvent weld inlets shall be furnished and installed with fixtures. Where connections between copper tubing and faucets are made by rubber compression fittings, a beading tool shall be used to mechanically deform the tubing above the compression fitting. Exposed traps and supply pipes for fixtures and equipment shall be connected to the rough piping systems at the wall, unless otherwise specified under the item. Floor and wall escutcheons shall be as specified. Drain lines and hot water lines of fixtures for handicapped personnel shall be insulated and do not require polished chrome finish. Plumbing fixtures and accessories shall be installed within the space shown.

### 3.3.1 Fixture Connections

Where space limitations prohibit standard fittings in conjunction with the cast-iron floor flange, special short-radius fittings shall be provided. Connections between earthenware fixtures and flanges on soil pipe shall be made gastight and watertight with a closet-setting compound or neoprene gasket and seal. Use of natural rubber gaskets or putty will not be permitted. Fixtures with outlet flanges shall be set the proper distance

from floor or wall to make a first-class joint with the closet-setting compound or gasket and fixture used.

3.3.2 Flushometer Valves

Flushometer valves shall be secured to prevent movement by anchoring the long finished top spud connecting tube to wall adjacent to valve with approved metal bracket. For water closets intended for handicap use, the flush valve handle shall be installed on the wide side of the enclosure.

3.3.3 Height of Fixture Rims Above Floor

Lavatories shall be mounted with rim 34 inches above finished floor. Wall-hung drinking fountains and water coolers shall be installed with rim 34 inches above floor. Installation of fixtures for use by the physically handicapped shall be in accordance with ICC A117.1.

3.3.4 Fixture Supports

Fixture supports for off-the-floor lavatories, urinals, water closets, and other fixtures of similar size, design, and use, shall be of the chair-carrier type. The carrier shall provide the necessary means of mounting the fixture, with a foot or feet to anchor the assembly to the floor slab. Adjustability shall be provided to locate the fixture at the desired height and in proper relation to the wall. Support plates, in lieu of chair carrier, shall be fastened to the wall structure only where it is not possible to anchor a floor-mounted chair carrier to the floor slab.

3.3.4.1 Support for Solid Masonry Construction

Chair carrier shall be anchored to the floor slab. Where a floor-anchored chair carrier cannot be used, a suitable wall plate shall be imbedded in the masonry wall.

3.3.4.2 Support for Concrete-Masonry Wall Construction

Chair carrier shall be anchored to floor slab. Where a floor-anchored chair carrier cannot be used, a suitable wall plate shall be fastened to the concrete wall using through bolts and a back-up plate.

3.3.4.3 Support for Steel Stud Frame Partitions

Chair carrier shall be used. The anchor feet and tubular uprights shall be of the heavy duty design; and feet (bases) shall be steel and welded to a square or rectangular steel tube upright. Wall plates, in lieu of floor-anchored chair carriers, shall be used only if adjoining steel partition studs are suitably reinforced to support a wall plate bolted to these studs.

3.3.4.4 Support for Wood Stud Construction

Where floor is a concrete slab, a floor-anchored chair carrier shall be used. Where entire construction is wood, wood crosspieces shall be installed. Fixture hanger plates, supports, brackets, or mounting lugs shall be fastened with not less than No. 10 wood screws, 1/4 inch thick minimum steel hanger, or toggle bolts with nut. The wood crosspieces shall extend the full width of the fixture and shall be securely supported.

### 3.3.5 Backflow Prevention Devices

Plumbing fixtures, equipment, and pipe connections shall not cross connect or interconnect between a potable water supply and any source of nonpotable water. Backflow preventers shall be installed where indicated and in accordance with ICC IPC at all other locations necessary to preclude a cross-connect or interconnect between a potable water supply and any nonpotable substance. In addition backflow preventers shall be installed at all locations where the potable water outlet is below the flood level of the equipment, or where the potable water outlet will be located below the level of the nonpotable substance. Backflow preventers shall be located so that no part of the device will be submerged. Backflow preventers shall be of sufficient size to allow unrestricted flow of water to the equipment, and preclude the backflow of any nonpotable substance into the potable water system. Bypass piping shall not be provided around backflow preventers. Access shall be provided for maintenance and testing. Each device shall be a standard commercial unit.

### 3.3.6 Access Panels

Access panels shall be provided for concealed valves and controls, or any item requiring inspection or maintenance. Access panels shall be of sufficient size and located so that the concealed items may be serviced, maintained, or replaced. Access panels shall be as specified in Section 05500A MISCELLANEOUS METAL.

### 3.3.7 Sight Drains

Sight drains shall be installed so that the indirect waste will terminate 2 inches above the flood rim of the funnel to provide an acceptable air gap.

### 3.3.8 Traps

Each trap shall be placed as near the fixture as possible, and no fixture shall be double-trapped. Traps installed on cast-iron soil pipe shall be cast iron. Traps installed on steel pipe or copper tubing shall be recess-drainage pattern, or brass-tube type.

## 3.4 IDENTIFICATION SYSTEMS

### 3.4.1 Identification Tags

Identification tags made of brass, engraved laminated plastic, or engraved anodized aluminum, indicating service and valve number shall be installed on valves, except those valves installed on supplies at plumbing fixtures. Tags shall be 1-3/8 inch minimum diameter, and marking shall be stamped or engraved. Indentations shall be black, for reading clarity. Tags shall be attached to valves with No. 12 AWG, copper wire, chrome-plated beaded chain, or plastic straps designed for that purpose.

### 3.4.2 Pipe Color Code Marking

Color code marking of piping shall be as specified in Section 09900 PAINTS AND COATINGS.

## 3.5 ESCUTCHEONS

Escutcheons shall be provided at finished surfaces where bare or insulated piping, exposed to view, passes through floors, walls, or ceilings, except

in boiler, utility, or equipment rooms. Escutcheons shall be fastened securely to pipe or pipe covering and shall be satin-finish, corrosion-resisting steel, polished chromium-plated zinc alloy, or polished chromium-plated copper alloy. Escutcheons shall be either one-piece or split-pattern, held in place by internal spring tension or setscrew.

## 3.6 PAINTING

Painting of pipes, hangers, supports, and other iron work, either in concealed spaces or exposed spaces, is specified in Section 09900 PAINTS AND COATINGS.

## 3.7 TESTS, FLUSHING AND DISINFECTION

### 3.7.1 Plumbing System

The following tests shall be performed on the plumbing system in accordance with ICC IPC, except that the drainage and vent system final test shall include the smoke test. The Contractor has the option to perform a peppermint test in lieu of the smoke test. If a peppermint test is chosen, the Contractor must submit a testing procedure to the Contracting Officer for approval.

a. Drainage and Vent Systems Test. The final test shall include a smoke test.

b. Building Sewers Tests.

c. Water Supply Systems Tests.

#### 3.7.1.1 Test of Backflow Prevention Assemblies

Backflow prevention assembly shall be tested using gauges specifically designed for the testing of backflow prevention assemblies. Gauges shall be tested annually for accuracy in accordance with the University of Southern California's Foundation of Cross Connection Control and Hydraulic Research or the American Water Works Association Manual of Cross Connection (Manual M-14). Report form for each assembly shall include, as a minimum, the following:

| Data on Device | Data on Testing Firm |
|---|---|
| Type of Assembly | Name |
| Manufacturer | Address |
| Model Number | Certified Tester |
| Serial Number | Certified Tester No. |
| Size | Date of Test |
| Location | |
| Test Pressure Readings | Serial Number and Test Data of Gauges |

If the unit fails to meet specified requirements, the unit shall be repaired and retested.

### 3.7.2 Defective Work

If inspection or test shows defects, such defective work or material shall be replaced or repaired as necessary and inspection and tests shall be repeated. Repairs to piping shall be made with new materials. Caulking of screwed joints or holes will not be acceptable.

3.7.3 System Flushing

3.7.3.1 During Flushing

Before operational tests or disinfection, potable water piping system shall be flushed with potable water. Sufficient water shall be used to produce a water velocity that is capable of entraining and removing debris in all portions of the piping system. This requires simultaneous operation of all fixtures on a common branch or main in order to produce a flushing velocity of approximately 4 fps through all portions of the piping system. In the event that this is impossible due to size of system, the Contracting Officer (or the designated representative) shall specify the number of fixtures to be operated during flushing. Contractor shall provide adequate personnel to monitor the flushing operation and to ensure that drain lines are unobstructed in order to prevent flooding of the facility. Contractor shall be responsible for any flood damage resulting from flushing of the system. Flushing shall be continued until entrained dirt and other foreign materials have been removed and until discharge water shows no discoloration. All faucets and drinking water fountains, to include any device considered as an end point device by NSF 61, Section 9, shall be flushed a minimum of 0.25 gallons per 24 hour period, ten times over a 14 day period.

3.7.3.2 After Flushing

System shall be drained at low points. Strainer screens shall be removed, cleaned, and replaced. After flushing and cleaning, systems shall be prepared for testing by immediately filling water piping with clean, fresh potable water. Any stoppage, discoloration, or other damage to the finish, furnishings, or parts of the building due to the Contractor's failure to properly clean the piping system shall be repaired by the Contractor. When the system flushing is complete, the hot-water system shall be adjusted for uniform circulation. Flushing devices and automatic control systems shall be adjusted for proper operation. Unless more stringent local requirements exist, lead levels shall not exceed limits established by 40 CFR 50.12 Part 141.80(c)(1). The water supply to the building shall be tested separately to ensure that any lead contamination found during potable water system testing is due to work being performed inside the building.

3.7.4 Operational Test

Upon completion of flushing and prior to disinfection procedures, the Contractor shall subject the plumbing system to operating tests to demonstrate satisfactory functional and operational efficiency. Such operating tests shall cover a period of not less than 8 hours for each system and shall include the following information in a report with conclusion as to the adequacy of the system:

a. Time, date, and duration of test.

b. Water pressures at the most remote and the highest fixtures.

c. Operation of each fixture and fixture trim.

d. Operation of each valve, hydrant, and faucet.

e. Temperature of each domestic hot-water supply.

f. Operation of each floor drain by flooding with water.

g. Operation of each vacuum breaker and backflow preventer.

3.7.5 Disinfection

After operational tests are complete, the entire domestic hot- and cold-water distribution system shall be disinfected. System shall be flushed as specified, before introducing chlorinating material. The chlorinating material shall be hypochlorites or liquid chlorine. Except as herein specified, water chlorination procedure shall be in accordance with AWWA C651 and AWWA C652. The chlorinating material shall be fed into the water piping system at a constant rate at a concentration of at least 50 parts per million (ppm). A properly adjusted hypochlorite solution injected into the main with a hypochlorinator, or liquid chlorine injected into the main through a solution-feed chlorinator, shall be used. The chlorine residual shall be checked at intervals to ensure that the proper level is maintained. Chlorine application shall continue until the entire main is filled. The water shall remain in the system for a minimum of 24 hours. Each valve in the system being disinfected shall be opened and closed several times during the contact period to ensure its proper disinfection. Following the 24-hour period, no less than 25 ppm chlorine residual shall remain in the system. Water tanks shall be disinfected by the addition of chlorine directly to the filling water. Following a 6 hour period, no less than 50 ppm chlorine residual shall remain in the tank. If after the 24 hour and 6 hour holding periods, the residual solution contains less than 25 ppm and 50 ppm chlorine respectively, flush the piping and tank with potable water, and repeat the above procedures until the required residual chlorine levels are satisfied. The system including the tanks shall then be flushed with clean water until the residual chlorine level is reduced to less than one part per million. During the flushing period each valve and faucet shall be opened and closed several times. Samples of water in disinfected containers shall be obtained from several locations selected by the Contracting Officer. The samples of water shall be tested for total coliform organisms (coliform bacteria, fecal coliform, streptococcal, and other bacteria) in accordance with AWWA EWW. The testing method used shall be either the multiple-tube fermentation technique or the membrane-filter technique. Disinfection shall be repeated until tests indicate the absence of coliform organisms (zero mean coliform density per 100 milliliters) in the samples for at least 2 full days. The system will not be accepted until satisfactory bacteriological results have been obtained.

3.8 PLUMBING FIXTURE SCHEDULE

P-1 WATER CLOSET, HANDICAPPED:

Siphon-jet, elongated bowl, top supply spud, ASME A112.19.2M, floor mounted . Floor flange shall be copper alloy, cast iron, or plastic.

Gasket shall be wax type.

Seat - ANSI Z124.5, Type A, white plastic, elongated, open front.

Flushometer Valve - ASSE 1037, large diaphragm type with non-hold-open feature, backcheck angle control stop, and vacuum breaker. Minimum upper chamber inside diameter of not less than 2-5/8 inches at the point where the diaphragm is sealed between the upper and lower chambers. The maximum water use shall be 1.6 gallons per flush. Height of top of rim shall be

in accordance with ICC A117.1.

P-6 WHEELCHAIR LAVATORY:

Vitreous china, ASME A112.19.2M, wheelchair lavatory with wrist or elbow controls 20 inches wide x 27 inches deep with gooseneck spout. Flow shall be limited to 0.25 gallon per cycle at a flowing water pressure of 80 psi if a metering device or fitting is used that limits the period of water discharge such as foot switch or fixture occupancy sensor. If a metering device is not used, the flow shall be limited to 2.5 gpm at a flowing water pressure of 80 psi.

Drain - Strainer shall be copper alloy or stainless steel.

P-13 Shower:

Interior Emergency Showers: Head for Emergency and Emergency Eye and Face Wash. Shower control shall be 1 inch or 1-1/2 inch stay-open type control valve. Unit shall be corrosion-resisting steel and shall be pedestal mounted. Emergency showers shall comply with ANSI Z358.1.

Interior Emergency Eye Wash: Fountain, ANSI Z358.1, eye wash, wall mounted self-cleaning, non-clogging eye and face wash with quick opening, full-flow valves, corrosion-resisting steel eye and face wash receptor. Unit shall deliver 3 gpm of aerated water at 30 psig flow pressure, with eye and face wash nozzles 33 to 45 inches above finished floor. Copper alloy control valves shall be provided. An air-gap shall be provided with the lowest potable eye and face wash water outlet located above the overflow rim by not less than the ICC IPC minimum per IPC Table 608.15.1. The Contractor shall provide complete with 1/2 inch pipe connection and 1-1/4 inch standard chrome drain fitting.

P-15 WATER COOLER DRINKING FOUNTAINS:

Drinking fountains shall meet the requirements of NSF 61, Section 9. Water cooler drinking fountains shall: be self contained, conform to ARI 1010, use one of the fluorocarbon gases conforming to ARI 700 and ASHRAE 34 which has an Ozone Depletion Potential of less than or equal to 0.05, have a capacity to deliver 8 gph of water at 50 degrees F with an inlet water temperature of 80 degrees F while residing in a room environment of 90 degrees F, and have self-closing valves. Self-closing valves shall have automatic stream regulators, have a flow control capability, have a push button actuation or have a cross-shaped index metal turn handle without a hood. Exposed surfaces of stainless steel shall have No. 4 general polish finish. Spouts shall provide a flow of water at least 4 inches high so as to allow the insertion of a cup or glass under the flow of water.

Handicapped - Handicapped units shall be surface wall-mounted. The dimensions shall be 15 inches wide, 20 inches deep, with a back height of 6 to 8 inches. The unit shall clear the floor or ground by at least 8 inches. A clear knee space shall exist between the bottom of the bowl and the floor or ground of at least 27 inches and between the front edge of the bowl and the body of the unit of at least 8 inches. A 8 inch wide clear space shall exist on both sides of the unit. The spout height shall be no

more than 36 inches above the floor or ground to the outlet. The spout shall be at the front of the unit and direct the water flow in a trajectory that is parallel or nearly parallel to the front of the unit. The bowl shall be 6-1/2 inches high, made of stainless steel and be for interior installation.

## 3.9 POSTED INSTRUCTIONS

Framed instructions under glass or in laminated plastic, including wiring and control diagrams showing the complete layout of the entire system, shall be posted where directed. Condensed operating instructions explaining preventive maintenance procedures, methods of checking the system for normal safe operation, and procedures for safely starting and stopping the system shall be prepared in typed form, framed as specified above for the wiring and control diagrams and posted beside the diagrams. The framed instructions shall be posted before acceptance testing of the systems.

## 3.10 PERFORMANCE OF WATER HEATING EQUIPMENT

Standard rating condition terms are as follows:

EF = Energy factor, overall efficiency.

ET = Thermal efficiency with 70 degrees F delta T.

SL = Standby loss in W/sq. ft. based on 80 degrees F delta T, or in percent per hour based on nominal 90 degrees F delta T.

HL = Heat loss of tank surface area.

V = Storage volume in liters

### 3.10.1 Storage Water Heaters

#### 3.10.1.1 Electric

a. Storage capacity of 120 gallons or less, and input rating of 12 kW or less: minimum energy factor (EF) shall be 0.95-0.00132V per 10 CFR 430.

b. Storage capacity of more than 120 gallons or input rating more than 12 kW: maximum SL shall be 1.9 W/sq. ft. per ASHRAE 90.1, Addenda B.

3.11 TABLES

TABLE I
PIPE AND FITTING MATERIALS FOR
DRAINAGE, WASTE, AND VENT PIPING SYSTEMS

| | | SERVICE | | | | | |
|---|---|---|---|---|---|---|---|
| Item # | Pipe and Fitting Materials | A | B | C | D | E | F |
| 1 | Cast iron soil pipe and fittings, hub and spigot, ASTM A 74 with compression gaskets | X | X | X | X | X | |
| 2 | Cast iron soil pipe and fittings hubless, CISPI 301 and ASTM A 888 | | X | X | X | X | |
| 32 | Cast iron drainage fittings, threaded, ASME B16.12 for use with Item 10 | X | | X | X | | |
| 3 | Cast iron screwed fittings (threaded) ASME B16.4 for use with Item 10 | | | | X | X | |
| 4 | Malleable-iron threaded fittings, galvanized ASME B16.3 for use with Item 10 | | | | X | X | |
| 5 | Steel pipe, seamless galvanized, ASTM A 53/A 53M, Type S, Grade B | X | | | X | X | |
| 6 | Seamless red brass pipe, ASTM B 43 | | X | X | | | |
| 7 | Bronzed flanged fittings, ASME B16.24 for use with Items 11 and 14 | | | | X | X | |
| 8 | Cast copper alloy solder joint pressure fittings, ASME B16.18 for use with Item 14 | | | | X | X | |
| 9 | Seamless copper pipe, ASTM B 42 | | | | X | | |
| 10 | Cast bronze threaded fittings, ASME B16.15 | | | | X | X | |
| 11 | Copper drainage tube, (DWV), ASTM B 306 | X* | X | X* | X | X | |
| 12 | Wrought copper and wrought alloy solder-joint drainage fittings. ASME B16.29 | X | X | X | X | X | |
| 13 | Cast copper alloy solder joint drainage fittings, DWV, ASME B16.23 | X | X | X | X | X | |

TABLE I
PIPE AND FITTING MATERIALS FOR
DRAINAGE, WASTE, AND VENT PIPING SYSTEMS

| | | SERVICE | | | | | |
|---|---|---|---|---|---|---|---|
| Item # | Pipe and Fitting Materials | A | B | C | D | E | F |

SERVICE:

A - Underground Building Soil, Waste and Storm Drain
B - Aboveground Soil, Waste, Drain In Buildings
C - Underground Vent
D - Aboveground Vent
E - Interior Rainwater Conductors Aboveground
F - Corrosive Waste And Vent Above And Belowground
* - Hard Temper

TABLE II
PIPE AND FITTING MATERIALS FOR PRESSURE PIPING SYSTEMS

| | | SERVICE | | | |
|---|---|---|---|---|---|
| Item No. | Pipe and Fitting Materials | A | B | C | D |
| 1 | Malleable-iron threaded fittings, a. Galvanized, ASME B16.3 for use with Item 4a | X | X | X | X |
| | b. Same as "a" but not galvanized for use with Item 4b | | | X | |
| 2 | Steel pipe: | X | | | |
| | a. Seamless, black, ASTM A 53/A 53M, Type S, Grade B | | | X | |
| 3 | Seamless red brass pipe, ASTM B 43 | X | X | | X |
| 4 | Bronze flanged fittings, ASME B16.24 for use with Items 5 and 7 | X | X | | X |
| 5 | Seamless copper pipe, ASTM B 42 | X | X | | X |
| 6 | Seamless copper water tube, ASTM B 88, ASTM B 88M | X** | X** | X** | X*** |
| 7 | Cast bronze threaded fittings, ASME B16.15 for use with Items 5 and 7 | X | X | | X |
| 8 | Wrought copper and bronze solder-joint pressure fittings, ASME B16.22 for use with Items 5, 7 and 8 | X | X | X | X |
| 9 | Cast copper alloy solder-joint pressure fittings, ASME B16.18 for use with Item 8 | X | X | X | X |
| 10 | Bronze and sand castings grooved joint pressure fittings for non-ferrous pipe ASTM B 584, for use with Item 2 | X | X | X | |
| 11 | Steel pipeline flanges, MSS SP-44 | X | X | | |
| 12 | Fittings: brass or bronze; ASME B16.15, and ASME B16.18 | X | X | | |

TABLE II
PIPE AND FITTING MATERIALS FOR PRESSURE PIPING SYSTEMS

| | | SERVICE | | | |
|---|---|---|---|---|---|
| Item No. | Pipe and Fitting Materials | A | B | C | D |
| | ASTM B 828 | | | | |
| 13 | Malleable-iron threaded pipe unions ASME B16.39 | X | X | | |
| 14 | Nipples, pipe threaded ASTM A 733 | X | X | X | |
| 15 | Crosslinked Polyethylene (PEX) Plastic Pipe ASTM F 877. | X | | | X |

A - Cold Water Aboveground
B - Hot Water 180 degrees F Maximum Aboveground
C - Compressed Air Lubricated
D - Cold Water Service Belowground
Indicated types are minimum wall thicknesses.
** - Type L - Hard
*** - Type K - Hard temper with brazed joints only or type K-soft temper without joints in or under floors
**** - In or under slab floors only brazed joints

TABLE III
STANDARD RATING CONDITIONS AND MINIMUM PERFORMANCE RATINGS FOR WATER HEATING EQUIPMENT

A. STORAGE WATER HEATERS

| FUEL | STORAGE CAPACITY GALLONS | INPUT RATING | TEST PROCEDURE | REQUIRED PERFORMANCE |
|---|---|---|---|---|
| Elect. | 120 max. | 12 kW max. | 10 CFR 430 | EF = 0.95-0.00132V minimum |
| Elect. | 120 min. OR | 12 kW min. | ASHRAE 90.1 (Addenda B) | SL = 1.9 W/sq. ft. maximum |

TERMS:

EF = Energy factor, overall efficiency.
ET = Thermal efficiency with 70 degrees F delta T.
SL = Standby loss in W/sq. ft. based on 80 degrees F delta T, or in percent per hour based on nominal 90 degrees F delta T.
HL = Heat loss of tank surface area
V = Storage volume in gallons

-- End of Section --

SECTION TABLE OF CONTENTS

DIVISION 15 - MECHANICAL

SECTION 15700A

UNITARY HEATING AND COOLING EQUIPMENT

**12/01**

PART 1 GENERAL

1.1 REFERENCES
1.2 SUBMITTALS
1.3 SAFETY REQUIREMENTS
1.4 DELIVERY, STORAGE, AND HANDLING
1.5 PROJECT/SITE CONDITIONS
1.5.1 Verification of Dimensions
1.5.2 Drawings

PART 2 PRODUCTS

2.1 STANDARD COMMERCIAL PRODUCTS
2.2 NAMEPLATES
2.3 ELECTRICAL WORK
2.4 UNITARY EQUIPMENT, SPLIT SYSTEM
2.4.1 Air-to-Refrigerant Coil
2.4.2 Refrigeration Circuit
2.4.3 Unit Controls
2.5 REMOTE CONDENSER OR CONDENSING UNIT
2.5.1 Outdoor Air to Air Heat Pump
2.5.1.1 Connections
2.5.1.2 Outdoor Coil
2.5.1.3 Unit Casing
2.5.1.4 Outdoor Fan
2.5.1.5 Compressor
2.5.1.6 Unit Controls
2.6 EQUIPMENT EFFICIENCY
2.7 UNITARY EQUIPMENT COMPONENTS
2.7.1 Refrigerant and Oil
2.7.2 Fans
2.7.3 Air Filters
2.7.3.1 Extended Surface Pleated Panel Filters
2.7.4 Coil Frost Protection
2.7.5 Pressure Vessels
2.7.6 Cabinet Construction
2.7.6.1 Indoor Cabinet
2.7.6.2 Outdoor Cabinet
2.8 ACCESSORIES
2.8.1 Refrigerant Signs
2.8.1.1 Installation Identification
2.8.1.2 Controls and Piping Identification
2.9 FABRICATION
2.9.1 Factory Coating
2.9.2 Factory Applied Insulation
2.10 SUPPLEMENTAL COMPONENTS/SERVICES

2.10.1 Refrigerant Piping
2.10.2 Ductwork
2.10.3 Temperature Controls

PART 3 EXECUTION

3.1 INSTALLATION
3.1.1 Equipment
3.1.2 Field Applied Insulation
3.1.3 Field Painting
3.2 CLEANING AND ADJUSTING
3.3 REFRIGERANT TESTS, CHARGING, AND START-UP
3.3.1 Refrigerant Leakage
3.3.2 Contractor's Responsibility
3.4 SYSTEM PERFORMANCE TESTS
3.5 DEMONSTRATIONS

-- End of Section Table of Contents --

# SECTION 15700A

# UNITARY HEATING AND COOLING EQUIPMENT
**12/01**

## PART 1 GENERAL

### 1.1 REFERENCES

The publications listed below form a part of this specification to the extent referenced. The publications are referred to in the text by basic designation only.

AIR CONDITIONING AND REFRIGERATION INSTITUTE (ARI)

| | |
|---|---|
| ARI 210/240 | (1994) Unitary Air-Conditioning and Air-Source Heat Pump Equipment |
| ARI 270 | (1995) Sound Rating of Outdoor Unitary Equipment |
| ARI 700 | (1999) Specifications for Fluorocarbon and Other Refrigerants |

AMERICAN SOCIETY FOR TESTING AND MATERIALS (ASTM)

| | |
|---|---|
| ASTM B 117 | (1997) Operating Salt Spray (Fog) Apparatus |
| ASTM C 1071 | (2000) Fibrous Glass Duct Lining Insulation (Thermal and Sound Absorbing Material) |
| ASTM D 520 | (2000) Zinc Dust Pigment |
| ASTM E 84 | (2001) Surface Burning Characteristics of Building Materials |

AMERICAN SOCIETY OF HEATING, REFRIGERATING AND AIR-CONDITIONING ENGINEERS (ASHRAE)

| | |
|---|---|
| ASHRAE 15 | (1994) Safety Code for Mechanical Refrigeration |
| ASHRAE 34 | (2001; Errata 2002) Designation and Safety Classification of Refrigerants |
| ASHRAE 52.1 | (1992) Gravimetric and Dust-Spot Procedures for Testing Air-Cleaning Devices Used in General Ventilation for Removing Particulate Matter |

AMERICAN WELDING SOCIETY (AWS)

| | |
|---|---|
| AWS Z49.1 | (1999) Safety in Welding and Cutting |

ASME INTERNATIONAL (ASME)

| | |
|---|---|
| ASME BPVC SEC IX | (2001) Boiler and Pressure Vessel Code; Section IX, Welding and Brazing Qualifications |
| ASME BPVC SEC VIII D1 | (1998) Boiler and Pressure Vessel Code; Section VIII, Pressure Vessels Division 1 - Basic Coverage |

NATIONAL ELECTRICAL MANUFACTURERS ASSOCIATION (NEMA)

| | |
|---|---|
| NEMA MG 1 | (1998) Motors and Generators |
| NEMA MG 2 | (1989) Safety Standard for Construction and Guide for Selection, Installation, and Use of Electric Motors and Generators |

UNDERWRITERS LABORATORIES (UL)

| | |
|---|---|
| UL 1995 | (1995; Rev thru Aug 1999) Heating and Cooling Equipment |
| UL 207 | (1993; Rev thru Oct 1997) Refrigerant-Containing Components and Accessories, Nonelectrical |
| UL 586 | (1996; Rev thru Apr 2000) High-Efficiency, Particulate, Air Filter Units |
| UL 900 | (1994; Rev thru Nov 1999) Test Performance of Air Filter Units |

## 1.2 SUBMITTALS

Government approval is required for submittals with a "G" designation; submittals not having a "G" designation are for information only. When used, a designation following the "G" designation identifies the office that will review the submittal for the Government. The following shall be submitted in accordance with Section 01330 SUBMITTAL PROCEDURES:

SD-02 Shop Drawings

Unitary Equipment, Split Systems Drawings; G-AE

Drawings provided in adequate detail to demonstrate compliance with contract requirements. Drawings shall consist of:

a. Equipment layouts which identify assembly and installation details.

b. Plans and elevations which identify clearances required for maintenance and operation.

c. Wiring diagrams which identify each component individually and interconnected or interlocked relationships between components.

d. Foundation drawings, bolt-setting information, and foundation bolts prior to concrete foundation construction for equipment

indicated or required to have concrete foundations.

e. Details, if piping and equipment are to be supported other than as indicated, which include loadings and type of frames, brackets, stanchions, or other supports.

f. Automatic temperature control diagrams and control sequences.

g. Installation details which includes the amount of factory set superheat and corresponding refrigerant pressure/temperature.

SD-03 Product Data

Unitary Equipment; G-AE

Manufacturer's standard catalog data, at least 5 weeks prior to the purchase or installation of a particular component, highlighted to show material, size, options, performance charts and curves, etc. in adequate detail to demonstrate compliance with contract requirements. Data shall include manufacturer's recommended installation instructions and procedures. If vibration isolation is specified for a unit, vibration isolator literature shall be included containing catalog cuts and certification that the isolation characteristics of the isolators provided meet the manufacturer's recommendations. Data shall be submitted for each specified component.

Unitary Equipment, Split System Spare Parts Data; G-AO

Spare parts data for each different item of equipment specified, after approval of detail drawings and not later than 2 months prior to the date of beneficial occupancy. The data shall include a complete list of parts and supplies, with current unit prices and source of supply, a recommended spare parts list for 1 year of operation, and a list of the parts recommended by the manufacturer to be replaced on a routine basis.

Posted Instructions; G-AO

Posted instructions, at least 2 weeks prior to construction completion, including equipment layout, wiring and control diagrams, piping, valves and control sequences, and typed condensed operation instructions. The condensed operation instructions shall include preventative maintenance procedures, methods of checking the system for normal and safe operation, and procedures for safely starting and stopping the system. The posted instructions shall be framed under glass or laminated plastic and be posted where indicated by the Contracting Officer.

Verification of Dimensions; G-AO

A letter, at least 2 weeks prior to beginning construction, including the date the site was visited, conformation of existing conditions, and any discrepancies found.

System Performance Tests

A schedule, at least 2 weeks prior to the start of related testing, for the system performance tests. The schedules shall

identify the proposed date, time, and location for each test.

Demonstrations; G, G-AO

A schedule, at least 2 weeks prior to the date of the proposed training course, which identifies the date, time, and location for the training.

SD-06 Test Reports

Refrigerant Tests, Charging, and Start-Up; G-AO

Six copies of each test containing the information described below in bound 8-1/2 x 11 inch booklets. Individual reports shall be submitted for the refrigerant system tests.

a. The date the tests were performed.

b. A list of equipment used, with calibration certifications.

c. Initial test summaries.

d. Repairs/adjustments performed.

e. Final test results.

System Performance Tests; G-AO

Six copies of the report provided in bound 8-1/2 x 11 inch booklets. The report shall document compliance with the specified performance criteria upon completion and testing of the system. The report shall indicate the number of days covered by the tests and any conclusions as to the adequacy of the system. The report shall also include the following information and shall be taken at least three different times at outside dry-bulb temperatures that are at least 5 degrees F apart:

a. Date and outside weather conditions.

b. The load on the system based on the following:

(1) The refrigerant used in the system.
(2) Condensing temperature and pressure.
(3) Suction temperature and pressure.
(4) Ambient, condensing and coolant temperatures.
(5) Running current, voltage and proper phase sequence for each phase of all motors.

c. The actual on-site setting of operating and safety controls.

d. Thermostatic expansion valve superheat - value as determined by field test.

e. Subcooling.

f. High and low refrigerant temperature switch set-points

g. Low oil pressure switch set-point.

h. Defrost system timer and thermostat set-points.

i. Moisture content.

j. Capacity control set-points.

k. Field data and adjustments which affect unit performance and energy consumption.

l. Field adjustments and settings which were not permanently marked as an integral part of a device.

SD-07 Certificates

Unitary Equipment;

Where the system, components, or equipment are specified to comply with requirements of ARI, ASHRAE, ASME, or UL, proof of such compliance shall be provided. The label or listing of the specified agency shall be acceptable evidence. In lieu of the label or listing, a written certificate from an approved, nationally recognized testing organization equipped to perform such services, stating that the items have been tested and conform to the requirements and testing methods of the specified agency may be submitted. When performance requirements of this project's drawings and specifications vary from standard ARI rating conditions, computer printouts, catalog, or other application data certified by ARI or a nationally recognized laboratory as described above shall be included. If ARI does not have a current certification program that encompasses such application data, the manufacturer may self certify that his application data complies with project performance requirements in accordance with the specified test standards.

Service Organization;

A certified list of qualified permanent service organizations, which includes their addresses and qualifications, for support of the equipment. The service organizations shall be reasonably convenient to the equipment installation and be able to render satisfactory service to the equipment on a regular and emergency basis during the warranty period of the contract.

SD-10 Operation and Maintenance Data

Unitary Equipment, Split System Operation Manuals; G-AO

Six complete copies of an operation manual in bound 8 1/2 x 11 inch booklets listing step-by-step procedures required for system startup, operation, abnormal shutdown, emergency shutdown, and normal shutdown at least 4 weeks prior to the first training course. The booklets shall include the manufacturer's name, model number, and parts list. The manuals shall include the manufacturer's name, model number, service manual, and a brief description of all equipment and their basic operating features.

Maintenance Manuals; G-AO

Six complete copies of maintenance manual in bound 8-1/2 x 11

inch booklets listing routine maintenance procedures, possible breakdowns and repairs, and a trouble shooting guide. The manuals shall include piping and equipment layouts and simplified wiring and control diagrams of the system as installed.

## 1.3 SAFETY REQUIREMENTS

Exposed moving parts, parts that produce high operating temperature, parts which may be electrically energized, and parts that may be a hazard to operating personnel shall be insulated, fully enclosed, guarded, or fitted with other types of safety devices. Safety devices shall be installed so that proper operation of equipment is not impaired. Welding and cutting safety requirements shall be in accordance with AWS Z49.1.

## 1.4 DELIVERY, STORAGE, AND HANDLING

Stored items shall be protected from the weather, humidity and temperature variations, dirt and dust, or other contaminants. Proper protection and care of all material both before and during installation shall be the Contractor's responsibility. Any materials found to be damaged shall be replaced at the Contractor's expense. During installation, piping and similar openings shall be capped to keep out dirt and other foreign matter.

## 1.5 PROJECT/SITE CONDITIONS

### 1.5.1 Verification of Dimensions

The Contractor shall become familiar with all details of the work, verify all dimensions in the field, and advise the Contracting Officer of any discrepancy before performing any work.

### 1.5.2 Drawings

Because of the small scale of the drawings, it is not possible to indicate all offsets, fittings, and accessories that may be required. The Contractor shall carefully investigate the plumbing, fire protection, electrical, structural and finish conditions that would affect the work to be performed and arrange such work accordingly, furnishing required offsets, fittings, and accessories to meet such conditions.

# PART 2 PRODUCTS

## 2.1 STANDARD COMMERCIAL PRODUCTS

Materials and equipment shall be standard products of a manufacturer regularly engaged in the manufacturing of such products, which are of a similar material, design and workmanship. The standard products shall have been in satisfactory commercial or industrial use for 2 years prior to bid opening. The 2 year use shall include applications of equipment and materials under similar circumstances and of similar size. The 2 years experience shall be satisfactorily completed by a product which has been sold or is offered for sale on the commercial market through advertisements, manufacturer's catalogs, or brochures. Products having less than a 2 year field service record shall be acceptable if a certified record of satisfactory field operation, for not less than 6000 hours exclusive of the manufacturer's factory tests, can be shown. Products shall be supported by a service organization. System components shall be environmentally suitable for the indicated locations.

## 2.2 NAMEPLATES

Major equipment including compressors, condensers, receivers, heat exchanges, fans, and motors shall have the manufacturer's name, address, type or style, model or serial number, and catalog number on a plate secured to the item of equipment. Plates shall be durable and legible throughout equipment life and made of anodized aluminum . Plates shall be fixed in prominent locations with nonferrous screws or bolts.

## 2.3 ELECTRICAL WORK

Electrical equipment, motors, motor efficiencies, and wiring shall be in accordance with Section 16415A ELECTRICAL WORK, INTERIOR. Electrical motor driven equipment specified shall be provided complete with motors, motor starters, and controls. Electrical characteristics shall be as shown, and unless otherwise indicated, all motors of 1 horsepower and above with open, dripproof, totally enclosed, or explosion proof fan cooled enclosures, shall be high efficiency type. Field wiring shall be in accordance with manufacturer's instructions. Each motor shall conform to NEMA MG 1 and NEMA MG 2 and be of sufficient size to drive the equipment at the specified capacity without exceeding the nameplate rating of the motor. Motors shall be continuous duty with the enclosure specified. Motor starters shall be provided complete with thermal overload protection and other appurtenances necessary for the motor control indicated. Motors shall be furnished with a magnetic across-the-line or reduced voltage type starter as required by the manufacturer. Motor duty requirements shall allow for maximum frequency start-stop operation and minimum encountered interval between start and stop. Motors shall be sized for the applicable loads. Motor torque shall be capable of accelerating the connected load within 20 seconds with 80 percent of the rated voltage maintained at motor terminals during one starting period. Motor bearings shall be fitted with grease supply fittings and grease relief to outside of enclosure. Manual or automatic control and protective or signal devices required for the operation specified and any control wiring required for controls and devices specified, but not shown, shall be provided.

## 2.4 UNITARY EQUIPMENT, SPLIT SYSTEM

Unit shall be an air-cooled , split system which employs a remote condenser , a separate indoor unit, and interconnecting refrigerant piping. Unit shall be the heat pump type conforming to applicable Underwriters Laboratories (UL) standards including UL 1995. Unit shall be rated in accordance with ARI 210/240 . Unit shall be provided with necessary fans, air filters, coil frost protection, internal dampers, mixing boxes, supplemental heat, and cabinet construction as specified in paragraph "Unitary Equipment Components". The remote unit shall be as specified in paragraph REMOTE CONDENSER OR CONDENSING UNIT. Evaporator or supply fans shall be double-width, double inlet, forward curved, backward inclined, or airfoil blade, centrifugal scroll type. Condenser or outdoor fans shall be the manufacturer's standard for the unit specified and may be either propeller or centrifugal scroll type. Fan and condenser motors shall have open, dripproof enclosures.

### 2.4.1 Air-to-Refrigerant Coil

Coils shall have nonferrous tubes of 3/8 inch minimum diameter with copper or aluminum fins that are mechanically bonded or soldered to the tubes. Casing shall be galvanized steel or aluminum. Contact of dissimilar metals shall be avoided. Coils shall be tested in accordance with ASHRAE 15 at

the factory and be suitable for the working pressure of the installed system. Each coil shall be dehydrated and sealed after testing and prior to evaluation and charging. Each unit shall be provided with a factory operating charge of refrigerant and oil or a holding charge. Unit shipped with a holding charge shall be field charged. Separate expansion devices shall be provided for each compressor circuit.

2.4.2 Refrigeration Circuit

Refrigerant-containing components shall comply with ASHRAE 15 and be factory tested, cleaned, dehydrated, charged, and sealed. Refrigerant charging valves and connections, and pumpdown valves shall be provided for each circuit. Filter-drier shall be provided in each liquid line and be reversible-flow type. Refrigerant flow control devices shall be an adjustable superheat thermostatic expansion valve with external equalizer matched to coil, capillary or thermostatic control, and a pilot solenoid controlled, leak-tight, four-way refrigerant flow reversing valve. A refrigerant suction line thermostatic control shall be provided to prevent freeze-up in event of loss of water flow during heating cycle.

2.4.3 Unit Controls

Unit shall be internally prewired with a control circuit powered by an internal transformer. Terminal blocks shall be provided for power wiring and external control wiring. Unit shall have cutoffs for high and low pressure, and low oil pressure for compressors with positive displacement oil pumps, , and safety interlocks on all service panels. Head pressure controls shall sustain unit operation with ambient temperature of 0 degrees F. Adjustable-cycle timers shall prevent short-cycling. Multiple compressors shall be staged by means of a time delay. Unit shall be internally protected by fuses or a circuit breaker in accordance with UL 1995. Low cost cooling shall be made possible by means of a control circuit which will modulate dampers to provide 100 percent outside air while locking out compressors.

2.5 REMOTE CONDENSER OR CONDENSING UNIT

Units with capacities less than 135,000 Btuh shall produce a maximum ARI sound rating when rated in accordance with ARI 270. Each remote condenser coil shall be fitted with a manual isolation valve and an access valve on the coil side. Saturated refrigerant condensing temperature shall not exceed 120 degrees F at 105 degrees F ambient. Unit shall be provided with low ambient condenser controls to ensure proper operation in an ambient temperature of 0 degrees F. Fan and cabinet construction shall be provided as specified in paragraph "Unitary Equipment Components". Fan and condenser motors shall have open, dripproof enclosures.

2.5.1 Outdoor Air to Air Heat Pump

Unit shall be rated in accordance with ARI 210/240 and conform to the requirements of UL 1995. Unit shall be factory fabricated, tested, packaged, and self-contained. Unit shall be complete with casing, propeller type fan, heat rejection/absorption coil, connecting piping and wiring, and all necessary appurtenances.

2.5.1.1 Connections

Interconnecting refrigeration piping, electrical power, and control wiring between the condensing unit and the indoor unit shall be provided as

required and as indicated. Electrical and refrigeration piping terminal connections between heat pump unit and evaporator coil shall be provided.

2.5.1.2 Outdoor Coil

Outdoor coil shall have large surface and contact area, and be constructed of aluminum fins mechanically bonded to nonferrous tubing. Contact of dissimilar metals should be avoided. Factory-installed coil refrigerant metering device shall be mounted on unit liquid service valve. Metering device internal components shall be removable for cleaning or replacement. Each coil shall be dehydrated and sealed after testing and prior to evaluation and charging. Each unit shall be provided with a factory operating charge of refrigerant and oil or a holding charge. Unit shipped with holding charge shall be field charged.

2.5.1.3 Unit Casing

Unit enclosure shall be insulated and constructed of cold-rolled steel, bonderized and finished with baked enamel. Large front service access panels shall provide easy access to all components. Unit(s) shall be equipped with permanent or throw-away type filter(s) that slide out for maintenance.

2.5.1.4 Outdoor Fan

Outdoor unit fan(s) shall be propeller type, direct driven, and arranged for vertical air discharge. Fan motor(s) shall be factory lubricated, inherently protected and resiliently mounted.

2.5.1.5 Compressor

Compressor shall be of the welded-hermetic type with internal vibration isolation and shall be covered with a shield to muffle operating sound. Compressor motor shall have both thermal and current-sensitive overload device, shall be equipped with a thermostatically controlled crankcase heater, and have internal high-pressure protection.

2.5.1.6 Unit Controls

Controls shall be factory wired and located in a readily accessible location on unit control ring. Controls and protective devices shall include a liquid line low-pressure switch, suction line accumulator and pressure relief device. An automatic defrost control shall be included to accomplish defrosting as per heat pump manufacturer's factory preset conditions. Control wiring terminal board shall be designed to match indoor unit terminal board and accessory thermostat(s) terminal(s) for standardized point-to-point connection.

2.6 EQUIPMENT EFFICIENCY

Unit shall have an efficiency of10.0 seer .

2.7 UNITARY EQUIPMENT COMPONENTS

2.7.1 Refrigerant and Oil

Refrigerant shall be one of the fluorocarbon gases. Refrigerants shall have number designations and safety classifications in accordance with ASHRAE 34. Refrigerants shall meet the requirements of ARI 700 as a

minimum. Refrigerants shall have an Ozone Depletion Potential (ODP) of less than or equal to 0.05. Contractor shall provide and install a complete charge of refrigerant for the installed system as recommended by the manufacturer. Except for factory sealed units, two complete charges of lubricating oil for each compressor crankcase shall be furnished. One charge shall be used during the system performance testing period. Following the satisfactory completion of the performance testing, the oil shall be drained and replaced with a second charge. Lubricating oil shall be of a type and grade recommended by the manufacturer for each compressor. Where color leak indicator dye is incorporated, charge shall be in accordance with manufacturer's recommendation.

2.7.2 Fans

Fan wheel shafts shall be supported by either maintenance-accessible lubricated antifriction block-type bearings, or permanently lubricated ball bearings. Unit fans shall be selected to produce the cfm required at the fan total pressure. Motor starters, if applicable, shall be magnetic across-the-line type with a open, dripproof enclosure. Thermal overload protection shall be of the manual or automatic-reset type. Fan wheels or propellers shall be constructed of aluminum or galvanized steel. Centrifugal fan wheel housings shall be of galvanized steel, and both centrifugal and propeller fan casings shall be constructed of aluminum or galvanized steel. Steel elements of fans, except fan shafts, shall be hot-dipped galvanized after fabrication or fabricated of mill galvanized steel. Mill-galvanized steel surfaces and edges damaged or cut during fabrication by forming, punching, drilling, welding, or cutting shall be recoated with an approved zinc-rich compound. Fan wheels or propellers shall be statically and dynamically balanced. Direct-drive fan motors shall be of the multiple-speed variety. Each drive will be independent of any other drive. Propeller fans shall be direct-drive drive type with fixed pitch blades. Each drive will be independent of any other drive. Drive bearings shall be protected with water slingers or shields.

2.7.3 Air Filters

Air filters shall be listed in accordance with requirements of UL 900, except high efficiency particulate air filters of 99.97 percent efficiency by the DOP Test Method shall be as listed under the label service and shall meet the requirements of UL 586.

2.7.3.1 Extended Surface Pleated Panel Filters

Filters shall be 2 inch depth sectional type of the size indicated and shall have an average efficiency of 25 to 30 percent when tested in accordance with ASHRAE 52.1. Initial resistance at 500 feet per minute will not exceed 0.36 inches water gauge. Filters shall be UL Class 2. Media shall be nonwoven cotton and synthetic fiber mat. A wire support grid bonded to the media shall be attached to a moisture resistant fiberboard frame. Four edges of the filter media shall be bonded to the inside of the frame to prevent air bypass and increase rigidity.

2.7.4 Coil Frost Protection

Each circuit shall be provided with a coil frost protection system which is a manufacturer's standard. The coil frost protection system shall use a temperature sensor in the suction line of the compressor to shut the compressor off when coil frosting occurs. Timers shall be used to prevent the compressor from rapid cycling.

2.7.5 Pressure Vessels

Pressure vessels shall conform to ASME BPVC SEC VIII D1 or UL 207, as applicable for maximum and minimum pressure or temperature encountered. Where referenced publications do not apply, pressure components shall be tested at 1-1/2 times design working pressure. Refrigerant wetted carbon steel surfaces shall be pickled or abrasive blasted free of mill scale, cleaned, dried, charged, and sealed.

2.7.6 Cabinet Construction

Casings for the specified unitary equipment shall be constructed of galvanized steel or aluminum sheet metal and galvanized or aluminum structural members. Minimum thickness of single wall exterior surfaces shall be 18 gauge galvanized steel or 0.071 inch thick aluminum on units with a capacity above 20 tons and 20 gauge galvanized steel or 0.064 inch thick aluminum on units with a capacity less than 20 tons. Casing shall be fitted with lifting provisions, access panels or doors, fan vibration isolators, electrical control panel, corrosion-resistant components, structural support members, insulated condensate drip pan and drain, and internal insulation in the cold section of the casing. Where double-wall insulated construction is proposed, minimum exterior galvanized sheet metal thickness shall be 20 gauge. Provisions to permit replacement of major unit components shall be incorporated. Penetrations of cabinet surfaces, including the floor, shall be sealed. Unit shall be fitted with a drain pan which extends under all areas where water may accumulate. Drain pan shall be fabricated from Type 300 stainless steel, galvanized steel with protective coating as required, or an approved plastic material. Pan insulation shall be water impervious. Extent and effectiveness of the insulation of unit air containment surfaces shall prevent, within limits of the specified insulation, heat transfer between the unit exterior and ambient air, heat transfer between the two conditioned air streams, and condensation on surfaces. Insulation shall conform to ASTM C 1071. Paint and finishes shall comply with the requirements specified in paragraph FACTORY COATING.

2.7.6.1 Indoor Cabinet

Indoor cabinets shall be suitable for the specified indoor service and enclose all unit components.

2.7.6.2 Outdoor Cabinet

Outdoor cabinets shall be suitable for outdoor service with a weathertight, insulated and corrosion-protected structure. Cabinets constructed exclusively for indoor service which have been modified for outdoor service are not acceptable.

2.8 ACCESSORIES

2.8.1 Refrigerant Signs

Refrigerant signs shall be a medium-weight aluminum type with a baked enamel finish. Signs shall be suitable for indoor or outdoor service. Signs shall have a white background with red letters not less than 0.5 inches in height.

2.8.1.1 Installation Identification

Each new refrigeration system shall be provided with a refrigerant sign which indicates the following as a minimum:

a. Contractor's name

b. Refrigerant number and amount of refrigerant.

c. The lubricant identity and amount.

d. Field test pressure applied.

2.8.1.2 Controls and Piping Identification

Refrigerant systems containing more than 110 lb of refrigerant shall be provided with refrigerant signs which designate the following as a minimum:

a. Valves or switches for controlling the refrigerant flow and the refrigerant compressor.

b. Pressure limiting device(s).

2.9 FABRICATION

2.9.1 Factory Coating

Unless otherwise specified, equipment and component items, when fabricated from ferrous metal, shall be factory finished with the manufacturer's standard finish, except that items located outside of buildings shall have weather resistant finishes that will withstand 500 hours exposure to the salt spray test specified in ASTM B 117 using a 5 percent sodium chloride solution. Immediately after completion of the test, the specimen shall show no signs of blistering, wrinkling, cracking, or loss of adhesion and no sign of rust creepage beyond 1/8 inch on either side of the scratch mark. Cut edges of galvanized surfaces where hot-dip galvanized sheet steel is used shall be coated with a zinc-rich coating conforming to ASTM D 520, Type I.

2.9.2 Factory Applied Insulation

Refrigeration equipment shall be provided with factory installed insulation on surfaces subject to sweating including the suction line piping. Where motors are the gas-cooled type, factory installed insulation shall be provided on the cold-gas inlet connection to the motor per manufacturer's standard practice. Factory insulated items installed outdoors are not required to be fire-rated. As a minimum, factory insulated items installed indoors shall have a flame spread index no higher than 75 and a smoke developed index no higher than 150. Factory insulated items (no jacket) installed indoors and which are located in air plenums, in ceiling spaces, and in attic spaces shall have a flame spread index no higher than 25 and a smoke developed index no higher than 50. Flame spread and smoke developed indexes shall be determined by ASTM E 84. Insulation shall be tested in the same density and installed thickness as the material to be used in the actual construction. Material supplied by a manufacturer with a jacket shall be tested as a composite material. Jackets, facings, and adhesives shall have a flame spread index no higher than 25 and a smoke developed index no higher than 50 when tested in accordance with ASTM E 84.

## 2.10 SUPPLEMENTAL COMPONENTS/SERVICES

### 2.10.1 Refrigerant Piping

Refrigerant piping for split-system unitary equipment shall be provided and installed in accordance with Section 15895 AIR SUPPLY, DISTRIBUTION, VENTILATION AND EXHAUST SYSTEM

### 2.10.2 Ductwork

Ductwork shall be provided and installed in accordance with Section 15895 AIR SUPPLY, DISTRIBUTION, VENTILATION, AND EXHAUST SYSTEM.

### 2.10.3 Temperature Controls

Temperature controls shall be in accordance with Section 15950A HEATING, VENTILATING AND AIR CONDITIONING (HVAC) CONTROL SYSTEMS .

# PART 3 EXECUTION

## 3.1 INSTALLATION

Work shall be performed in accordance with the manufacturer's published diagrams, recommendations, and equipment warranty requirements. Where equipment is specified to conform to the requirements of ASME BPVC SEC VIII D1and ASME BPVC SEC IX, the design, fabrication, and installation of the system shall conform to ASME BPVC SEC VIII D1 and ASME BPVC SEC IX.

### 3.1.1 Equipment

Refrigeration equipment and the installation thereof shall conform to ASHRAE 15. Necessary supports shall be provided for all equipment, appurtenances, and pipe as required, including frames or supports for compressors, and similar items. If mechanical vibration isolators are not provided, vibration absorbing foundations shall be provided. Each support shall include isolation units consisting of machine and support fastenings, together with intermediate isolation material. Other floor-mounted equipment shall be set on not less than a 6 inch concrete pad doweled in place. Concrete foundations for floor mounted pumps shall have a mass equivalent to three times the weight of the components, pump, base plate, and motor to be supported. Support drawings, bolt-setting information, and foundation bolts shall be furnished prior to concrete foundation construction for all equipment indicated or required to have concrete foundations. Equipment shall be properly leveled, aligned, and secured in place in accordance with manufacturer's instructions.

### 3.1.2 Field Applied Insulation

Field applied insulation shall be as specified in Section 15080A THERMAL INSULATION FOR MECHANICAL SYSTEMS, except as defined differently herein.

### 3.1.3 Field Painting

Painting required for surfaces not otherwise specified, and finish painting of items only primed at the factory are specified in Section 09900 PAINTING, GENERAL.

## 3.2 CLEANING AND ADJUSTING

Equipment shall be wiped clean, with all traces of oil, dust, dirt, or paint spots removed. Temporary filters shall be provided for all fans that are operated during construction, and new filters shall be installed after all construction dirt has been removed from the building. System shall be maintained in this clean condition until final acceptance. Bearings shall be properly lubricated with oil or grease as recommended by the manufacturer. Belts shall be tightened to proper tension. Control valves and other miscellaneous equipment requiring adjustment shall be adjusted to setting indicated or directed. Fans shall be adjusted to the speed indicated by the manufacturer to meet specified conditions. Testing, adjusting, and balancing shall be as specified in Section 15990A TESTING, ADJUSTING, AND BALANCING OF HVAC SYSTEMS.

## 3.3 REFRIGERANT TESTS, CHARGING, AND START-UP

Split-system refrigerant piping systems shall be tested and charged. Packaged refrigerant systems which are factory charged shall be checked for refrigerant and oil capacity to verify proper refrigerant levels per manufacturer's recommendations. Following charging, packaged systems shall be tested for leaks with a halide torch or an electronic leak detector.

### 3.3.1 Refrigerant Leakage

If a refrigerant leak is discovered after the system has been charged, the leaking portion of the system shall immediately be isolated from the remainder of the system and the refrigerant pumped into the system receiver or other suitable container. Under no circumstances shall the refrigerant be discharged into the atmosphere.

### 3.3.2 Contractor's Responsibility

The Contractor shall, at all times during the installation and testing of the refrigeration system, take steps to prevent the release of refrigerants into the atmosphere. The steps shall include, but not be limited to, procedures which will minimize the release of refrigerants to the atmosphere and the use of refrigerant recovery devices to remove refrigerant from the system and store the refrigerant for reuse or reclaim. At no time shall more than 3 ounces of refrigerant be released to the atmosphere in any one occurrence. Any system leaks within the first year shall be repaired in accordance with the requirements herein at no cost to the Government including material, labor, and refrigerant if the leak is the result of defective equipment, material, or installation.

## 3.4 SYSTEM PERFORMANCE TESTS

Before each refrigeration system is accepted, tests to demonstrate the general operating characteristics of all equipment shall be conducted by a registered professional engineer or an approved manufacturer's start-up representative experienced in system start-up and testing, at such times as directed. Tests shall cover a period of not less than 48 hours for each system and shall demonstrate that the entire system is functioning in accordance with the drawings and specifications. Corrections and adjustments shall be made as necessary and tests shall be re-conducted to demonstrate that the entire system is functioning as specified. Prior to acceptance, service valve seal caps and blanks over gauge points shall be installed and tightened. Any refrigerant lost during the system startup

shall be replaced. If tests do not demonstrate satisfactory system performance, deficiencies shall be corrected and the system shall be retested. Tests shall be conducted in the presence of the Contracting Officer. Water and electricity required for the tests will be furnished by the Government. Any material, equipment, instruments, and personnel required for the test shall be provided by the Contractor. Field tests shall be coordinated with Section 15990A TESTING, ADJUSTING, AND BALANCING OF HVAC SYSTEMS.

## 3.5 DEMONSTRATIONS

Contractor shall conduct a training course for the operating staff as designated by the Contracting Officer. The training period shall consist of a total 4 hours of normal working time and start after the system is functionally completed but prior to final acceptance tests. The field posted instructions shall cover all of the items contained in the approved operation and maintenance manuals as well as demonstrations of routine maintenance operations.

-- End of Section --

SECTION TABLE OF CONTENTS

DIVISION 15 - MECHANICAL

SECTION 15880

FILTER SEPARATOR, FUELING SYSTEM

**04/99; Rev. 12/00**

PART 1 GENERAL

1.1 REFERENCES
1.2 SUBMITTALS
1.3 PREPRODUCTION TESTING
1.3.1 Preproduction Testing
1.3.1.1 Inspection and Testing
1.3.1.2 Deviations from API Publ 1581
1.3.1.3 Data Required Prior to Tests
1.3.1.4 Submittal of Test Documents
1.3.1.5 Required Preproduction Tests

PART 2 PRODUCTS

2.1 DESIGN CONDITIONS
2.2 WORKMANSHIP
2.3 CLEANING
2.4 WELDING
2.5 MATERIALS OF CONSTRUCTION
2.5.1 Housing
2.6 CONSTRUCTION
2.6.1 Housing Vessel
2.6.2 Legs
2.6.3 Inlet and Outlet Connections
2.6.4 Manual Drain Valve
2.6.5 Sight Gauge
2.6.6 Differential Pressure Gauge
2.6.7 Automatic Air Eliminator and Pressure Relief Valves
2.6.8 Sampling Connections
2.6.9 Spider Assembly
2.6.10 Coalescer and Separator Cartridges
2.6.11 Control Valve Accessories
2.6.11.1 Float Control Pilot and Tester
2.6.12 Identification of Product
2.6.13 Assembly

PART 3 EXECUTION

3.1 INSTALLATION
3.1.1 Anchoring
3.1.2 Grouting
3.1.3 Leveling and Aligning
3.1.4 Painting

-- End of Section Table of Contents --

SECTION 15880

FILTER SEPARATOR, FUELING SYSTEM
**04/99; Rev. 12/00**

PART 1 GENERAL

Waiver to Use MilStds and MilSpecs in Air Force Fuel Projects, HQ AFCESA/CESM (01/29/96).

1.1 REFERENCES

The publications listed below form a part of this specification to the extent referenced. The publications are referred to in the text by basic designation only.

AMERICAN PETROLEUM INSTITUTE (API)

| | |
|---|---|
| API Pub 1581 | (Jan 2000) Specifications and Qualification Procedures-Aviation Jet Fuel Filter/Separator |

AMERICAN SOCIETY OF MECHANICAL ENGINEERS (ASME)

| | |
|---|---|
| ASME 16 | (1998) Boiler and Pressure Vessel Section VIII, Pressure Vessels Division 1 |
| ASME B16.5 | (1996) Pipe Flanges and Flanged Fittings |
| ASME B31.3 | (1996) Process Piping w / Addenda |

AMERICAN SOCIETY FOR TESTING AND MATERIALS (ASTM)

| | |
|---|---|
| ASTM C 827 | (1995a; R1997 e1) Early Volume Change of Cementitious Mixtures |

COMMERCIAL ITEM DESCRIPTIONS (CID)

| | |
|---|---|
| CID A-A-1923 | (Rev A) Shield, Expansion (Lag, Machine and Externally Threaded Wedge Bolt Anchors) |

MILITARY SPECIFICATIONS (MS)

| | |
|---|---|
| MS MIL-PRF-4556 | (Rev E) Coating Kit, Epoxy, for Interior of Steel Fuel Tanks |
| MS SAE-AMS-P-5315 | (Rev B; NOTICE 1) Packing Preformed, Hydrocarbon Fuel Resistant |

MILITARY STANDARDS

| | |
|---|---|
| MIL-STD-130-K | (Rev G; NOTICE 1) Identification Marking of U.S. Military Property |
| MIL-HDBK-831 | Preparation of Test Reports |

## 1.2 SUBMITTALS

Government approval is required for submittals with a "G" designation; submittals not having a "G" designation are for information only. When used, a designation following the "G" designation identifies the office that will review the submittal for the Government. The following shall be submitted in accordance with Section 01330 SUBMITTAL PROCEDURES:

SD-02 Shop Drawings

Filter Separators; G-AE.

Submit scaled drawings showing dimensions, tolerances, connection sizes of the vessel and accessories. Submit shop drawings for elements. Shop drawings shall include number and arrangement of elements. Shop drawings for this Section shall be submitted for Government approval. Submit technical literature on the vessel, elements, and accessories, which is the manufacturer's published literature.

SD-07 Certificates

Filter Separators.

If product has been previously tested and approved by the Government, submit certification of qualification under API Pub 1581, 5th Edition, Category M100, Type S/LD. Include description of qualification, which contains element types and quantities, and provide details of the configurations of vessels tested. Include name of Government Agency and date of approval.

SD-10 Operation and Maintenance Data

Filter Separators; G-AE.

Operation and maintenance information shall be submitted for equipment specified herein. Refer to Section 01730 FACILITY OPERATION AND MAINTENANCE MANUAL.

## 1.3 PREPRODUCTION TESTING

### 1.3.1 Preproduction Testing

Prior to construction of filter separators (FSI-1 THROUGH FSI-5, FSR-6, AND FSR-7) for the project, preproductions tests shall have been conducted in the presence of a Det 3, WR-ALC/AFTH Technical Assistance Team, Air Force Petroleum Office, Wright-Patterson AFB, OH representative. Provide a copy of the completed test report to the AF Technical Assistance Team. The Contractor shall give the Contracting Officer 30 days notice prior to conductance of factory tests in order to schedule witnessing by representative.

#### 1.3.1.1 Inspection and Testing

The inspection and testing of the preproduction filter separator shall be conducted on a full-scale test system in accordance with API Pub 1581 and as specified herein. The test sample shall consist of a complete filter separator with elements installed. Elements shall be representative of a

production lot. The filter separator, coalescers, and separator screens shall be identified with the manufacturer's part number.

1.3.1.2 Deviations from API Publ 1581

The following are deviations to API Pub 1581 for M100 Type S/LD all tests 1, 2, 3 and 4.

The allowable effluent fuel contamination limit for free water shall be as follows:

(a) The average free water content in a test set shall not exceed 5 parts per million.

(b) Additive D shall be Stadis 450 manufactured by E.I. DuPont & Nemours Co. in lieu of ASA 3.

(c) Additive C shall be DCI-4A conforming to MS MIL-PRF-25017.

1.3.1.3 Data Required Prior to Tests

Submit installation data to enable Government representative to verify that the equipment has been installed and operated correctly. Submit certification from the manufacturer that the test vessel has passed a hydrostatic pressure test, and that the design conforms to API Pub 1581, 5th Edition, Category M100, Type S/LD. Submit two sets of assembly drawings of the test vessel and accessories for approval.

1.3.1.4 Submittal of Test Documents

The test report shall be submitted to the Command Fuel Facilities Engineer or Det 3, WR-ALC/AFTH representative for Government approval. Prepare report in accordance with MIL-HDBK-831. In addition to results, the report shall contain complete records of the tests including data sheets, performance curves, chronological test records, photographs, sample calculations, test procedures, and a description of the test apparatus. Submit color photographs of the sample elements before and after tests. Submit one new coalescer element and one new separator element.

1.3.1.5 Required Preproduction Tests

a. Examination. A visual examination of the filter separator housing and each element shall be performed to ensure compliance with the drawings and verify workmanship requirements.

b. Hydrostatic Pressure Tests. The filter separator shall be subjected to a hydrostatic pressure of 338 pounds per square inch gage (PSIG) per requirements of the ASME 16. In addition, the inlet manifold or chamber (after installation) shall be blanked off and tested to 115 PSIG.

c. Full Scale Performance Test. The filter separator with a full set of coalescer and separator elements shall be tested to the API Pub 1581, 5th Edition, Category M100, Type S/LD at 600 GPM in accordance with API Pub 1581 Test Method Group II, Test Series No. 2, except as otherwise specified.

d. Single Element Test. M100 tests 1, 2, 3 and 4 shall be run in an appropriate scale single element test vessel per API Pub 1581, as modified by paragraph "Deviations from API Pub 1581."

e. Coalescer Structural Test. A minimum of three coalescer elements, after being subjected to the full scale test described in paragraph entitled "Full Scale Performance Test", above, shall be subjected to a differential pressure test until rupture to determine structural strength. Each element shall be capable of withstanding a differential pressure of at least 75 PSI without rupture or bypassing of seals. The pressure test run needs to last a minimum of 5 minutes before rupture.

f. Disassembly Inspection. Upon completion of the tests specified above, the filter separator shall be disassembled and inspected to determine the condition of the coalescer and separator elements. Defects in the element such as swelling of the elements, or damaged gaskets shall be noted. Swelling of or damage to the elements or other parts shall be cause for rejection.

# PART 2 PRODUCTS

## 2.1 DESIGN CONDITIONS

Design conditions shall be as specified in Section 15050 MECHANICAL EQUIPMENT, FUELING and as modified herein.

## 2.2 WORKMANSHIP

Each filter separator, including all parts and accessories, shall be free from blemishes, defects, burrs and sharp edges. The vessel shall exhibit accuracy of dimensions, accurate radii of fillets and complete marking of parts and assemblies.

## 2.3 CLEANING

Components of the filter separators shall be cleaned to remove dirt; excess soldering; brazing, and welding flux; welding slag; loose, spattered, or excess solder; metal chips; and other foreign materials before, during and after assembly.

## 2.4 WELDING

Welding shall be in accordance with ASME B31.3.

## 2.5 MATERIALS OF CONSTRUCTION

### 2.5.1 Housing

a. Carbon steel with internal epoxy coating.
b. FLOAT ASSEMBLY. Stainless steel.
c. MANUAL DRAIN VALVE. Stainless steel.
d. SIGHT GLASS. Armored clear pyrex with nickel-copper alloy ball checks.
e. DIFFERENTIAL GAUGE. Corrosion resistant piston with stainless steel valves.
f. SEPARATORS. 200 mesh stainless steel, coated on both sides with Teflon.

## 2.6 CONSTRUCTION

### 2.6.1 Housing Vessel

Each filter separator housing shall be fabricated from carbon steel and

shall be internally coated with an epoxy coating in accord with MS MIL-PRF -4556. Coat the exterior with alkalyd resin primer (universal metal primer). Each unit shall be constructed and labeled in accordance with ASME 16. The housing shall be designed for a working pressure of 225 PSIG. Each unit shall be horizontal, end-opening type with coalescers and separators mounted side-by-side (coalescers at the bottom of the vessel and separators at the top). The head opening shall be equipped with a hinged or pivoting device to facilitate swinging the head to one side for servicing. The hinges or pivots shall support the head during servicing without distortion or misalignment. Swing-type bolts shall be used on all main closures. Unit shall be provided with 3-inch inside diameter lifting eyes spaced to support a weight of 2-1/2 times the gross weight of the filter separator. The configuration of the pressure vessel shall be as shown on the drawings. The housing shall be provided with a 3/4-inch inlet compartment fuel drain plug. A hand hole access plate shall be provided in the inlet compartment. The head shall be sealed to the body by means of an O-ring, meeting requirements of MS SAE-AMS-P-5315, mounted in a circular groove at the point of closure. Threaded base mounting adapters shall be provided for the coalescers. The separators shall be mounted on adapters with blunted Vee-type knife edges. Height of Vee section to be 0.06 inches, plus or minus 10 percent. The filter separator vessel shall be able to withstand a force of 2,400 pounds and a moment of 2,400 foot-pounds at the flanges.

2.6.2 Legs

Four 3 x 3 x 1/4 inch angle-shaped legs shall be welded to the housing. Each leg shall be fitted with a 4 x 4 x 1/2-inch base plate drilled through with a 3/4-inch hole.

2.6.3 Inlet and Outlet Connections

The inlet and outlet connections shall be 6 inch nominal pipe size and shall be located parallel to each other as shown on the drawings. Inlet connection shall be provided with raised face flanges, faced and drilled in compliance with ASME B16.5, Class 150. Outlet connection flange face shall match Filter Separator Control Valve (FSCV).

2.6.4 Manual Drain Valve

Each filter separator shall be equipped with a 1-inch stainless steel manual ball valve water and fuel drain. The valve shall be capable of draining all water, fuel and sediment from the filter separator by gravity. The valve shall be installed below the sump of the housing as shown on the drawings.

2.6.5 Sight Gauge

A 1/2-inch armored, clear pyrex liquid level gauge shall be provided for observing the water accumulation in the sump. The gauge shall be equipped with stainless steel ball checks in both the upper and lower fittings, an upper and lower shutoff valve, and a bottom blowoff cock. The gauge will contain a colored density sensitive ball.

2.6.6 Differential Pressure Gauge

The housing shall be equipped with a direct-reading, piston type differential pressure gauge that measures the differential pressure across both coalescers and separators. The gauge shall consist of a

spring-supported, corrosion resistant piston moving inside a glass cylinder, with high pressure applied on top of the piston and low pressure applied below it. Under a differential pressure of 30 PSI, leakage past the piston shall not exceed 120 drops per minute. The cylinder shall have stainless steel and flanges with Viton O-ring seals. The high pressure inlet of the gauge shall have a 10-micron pleated paper filter and the low pressure connection shall have a fine mesh stainless steel strainer. The gauge shall have an operating pressure of 300 PSI. Differential pressure range of the gauge through approximately 3 inches of piston movement shall be 0-30 PSI with an accuracy of $\pm$ 0.5 PSI, calibrated linearly with one PSI scale graduations. High and low pressure connections shall be 1/4 inch NPT female with a stainless steel bar stock valve at each connection. Construction of the gauge shall be such that a 3-valve manifold is not necessary. If only one bar stock valve is closed, the gauge shall not be damaged by up to 300 PSI differential pressure in either direction. The differential pressure gauge shall be attached to the filter separator by a gauge panel. A pressure gauge shall be attached to the differential pressure gauge to indicate the high pressure and have a range of 300 psi.

2.6.7 Automatic Air Eliminator and Pressure Relief Valves

A 1-inch angle pattern pressure relief valve shall be provided on top of each vessel. An automatic air eliminator shall be installed on the highest point of the vessel and shall have check valve feature. The air eliminator shall release at pressures up to 150 psi with no fuel leakage allowed.

2.6.8 Sampling Connections

Sampling connections shall be provided at the inlet and outlet connections to the housing. Each sampling connection shall consist of a 1/4-inch sampling probe where the probe faces upstream, ball valve, a quick disconnect coupling and aluminum dust cap. The sampling connections shall be capable of accepting a sampling kit for drawing the samples required to assure fuel quality.

2.6.9 Spider Assembly

Each filter separator shall contain a spider assembly to hold the coalescers and separators in position, to support them firmly against vibration. The method of stabilization shall assure an electrical bond between the spider and the vessel.

2.6.10 Coalescer and Separator Cartridges

Each filter separator shall be provided with coalescers and separators that have been qualified to the performance requirements of API Pub 1581 Fifth Edition, Category M100, Type S/LD. Coalescers shall have a minimum capacity of 2.27 gpm per inch of length, and separators shall have a minimum capacity of 8.33 gpm per inch of length.

2.6.11 Control Valve Accessories

Provide each filter separator with a control valve (FSCV), manual water drain valve, and float control valve (FC) with manual tester as specified in Section entitled "Control Valves" and shall be of the same manufacturer.

2.6.11.1 Float Control Pilot and Tester

Each housing sump shall be fitted with a float control pilot and tester

specified in Section 15101 CONTROL VALVES and shall be of the same manufacturer as the control valves.

2.6.12 Identification of Product

Equipment, assemblies, and parts shall be marked for identification in accordance with MIL-STD-130-K. The main equipment nameplate shall be mounted on the housing, and in addition to the usual MIL-STD-130-K requirements, shall include the following markings in letters 3/32 inch high or larger:

Filter Separator, Liquid Fuel_____

Design Flow-Rate_____

Design Pressure_____

Elements_____

First Stage _____ Mfg. Part No. *_____

Second Stage _____ Mfg. Part No. *_____

Contract No. *_____

Manufacturer *_____

Specification*_____

*Applicable information shall be entered by the Contractor.
*Applicable information shall be stenciled by LFM personnel.

2.6.13 Assembly

Each filter separator shall come assembled with all accessories and shall be ready for use. The functions of all components shall be tested prior to shipment and no assembly or field adjustment of valves or components shall be required.

PART 3 EXECUTION

3.1 INSTALLATION

Install equipment and components in position, true to line, level and plumb and measured from established benchmarks or reference points. Follow manufacturer's recommended practices for equipment installation. Provide required clearance between equipment components. Equipment apparatus, and accessories requiring normal servicing or maintenance to be accessible.

3.1.1 Anchoring

Anchor equipment in place. Check alignment of anchor bolts before installing equipment and cleanout associated sleeves. Do not cut bolts because of misalignment. Notify Contracting Officer of errors and obtain the Contracting Officer's acceptance before proceeding with corrections. Cut anchor bolts of excess length to the appropriate length without damage to threads. Where anchor bolts or like devices have not been installed, provide appropriate self-drilling type anchors for construction condition. Expansion bolt anchors provided shall be in accordance with CID A-A-1923,

Type 4, Class One, half-inch size.

3.1.2 Grouting

Equipment, which is anchored to a pad, shall be grouted in place where applicable. Before setting equipment in place and before placing grout, clean surfaces to be in contact with grout, including fasteners and sleeves. Remove standing water, debris, oil, rust, coatings and other materials which impair bond. Clean contaminated concrete by grinding or other acceptable means. Provide necessary formwork for placing and retaining grout. Grout to be nonmetallic, nonshrink, fluid precision grout of a hydraulic cementitious system with graded and processed silica aggregate, Portland cement, shrinkage compensating agents, plasticizing and water reducing agents; free of aluminum power agents, oxidizing agents and inorganic accelerators, including chlorides; proportioned, premixed and packaged at factory with only the addition of water required at the project site. Grouting to meeting requirements of ASTM C 827. Perform grouting in accord with ACI, equipment manufacturer's, and grout manufacturer's published specifications and recommendations.

3.1.3 Leveling and Aligning

Level and align equipment in accordance with respective manufacturer's published data. Do not use anchor bolts, jack-nuts or wedges to support, level or align equipment. Install only flat shims for leveling equipment. Place shims to fully support equipment. Wedging is not permitted. Shims to be fabricated flat carbon steel units of surface configuration and area not less than equipment bearing surface. Shims to provide for full equipment support. Shims to have smooth surfaces and edges, free from burrs and slivers. Flame or electrode cut edges not acceptable.

3.1.4 Painting

Equipment painting shall be specified in Section 15060 PIPE, MANUAL VALVES, AND FITTINGS, FUELING SYSTEM.

-- End of Section --

SECTION TABLE OF CONTENTS

DIVISION 15 - MECHANICAL

SECTION 15895

AIR SUPPLY, DISTRIBUTION, VENTILATION, AND EXHAUST SYSTEM

**02/03**

PART 1 GENERAL

1.1 REFERENCES
1.2 COORDINATION OF TRADES
1.3 DELIVERY AND STORAGE
1.4 FIELD MEASUREMENTS
1.5 SUBMITTALS

PART 2 PRODUCTS

2.1 STANDARD PRODUCTS
2.2 ASBESTOS PROHIBITION
2.3 NAMEPLATES
2.4 EQUIPMENT GUARDS AND ACCESS
2.5 PIPING COMPONENTS
2.5.1 Copper Tube
2.5.2 Joints and Fittings For Copper Tube
2.5.3 Valves
2.5.3.1 Angle Valves
2.5.3.2 Ball Valves
2.5.3.3 Air Vents
2.5.4 Strainers
2.6 ELECTRICAL WORK
2.7 CONTROLS
2.8 DUCTWORK COMPONENTS
2.8.1 Metal Ductwork
2.8.1.1 Transitions
2.8.1.2 General Service Duct Connectors
2.8.2 Ductwork Accessories
2.8.2.1 Duct Access Doors
2.8.2.2 Splitters and Manual Balancing Dampers
2.8.2.3 Air Deflectors and Branch Connections
2.8.3 Duct Sleeves, Framed Prepared Openings, Closure Collars
2.8.3.1 Duct Sleeves
2.8.3.2 Framed Prepared Openings
2.8.3.3 Closure Collars
2.8.4 Plenums and Casings for Field-Fabricated Units
2.8.4.1 Duct Liner
2.8.5 Diffusers, Registers, and Grilles
2.8.5.1 Diffusers
2.8.5.2 Registers and Grilles
2.8.6 Louvers
2.8.7 Bird Screens and Frames
2.9 AIR SYSTEMS EQUIPMENT
2.9.1 Fans
2.9.1.1 Ceiling Exhaust Fans

2.9.2 Coils
2.9.3 Air Filters
2.9.3.1 Extended Surface Pleated Panel Filters
2.9.3.2 Holding Frames

PART 3 EXECUTION

3.1 INSTALLATION
3.1.1 Piping
3.1.1.1 Joints
3.1.2 Supports
3.1.2.1 General
3.1.2.2 Pipe Hangers, Inserts and Supports
3.1.3 Anchors
3.1.4 Pipe Sleeves
3.1.4.1 Fire Seal
3.1.4.2 Escutcheons
3.1.5 Air Vents
3.1.5.1 Vents
3.1.6 Valves
3.1.7 Equipment and Installation
3.1.8 Access Panels
3.1.9 Flexible Connectors
3.1.10 Sleeved and Framed Openings
3.1.11 Metal Ductwork
3.1.12 Insulation
3.1.13 Duct Test Holes
3.1.14 Power Transmission Components Adjustment
3.2 FIELD PAINTING AND IDENTIFICATION SYSTEMS
3.2.1 Finish Painting and Pipe Color Code Marking
3.3 DUCTWORK LEAK TEST
3.4 TESTING, ADJUSTING, AND BALANCING
3.5 PERFORMANCE TESTS
3.6 CLEANING AND ADJUSTING
3.7 FIELD TRAINING

-- End of Section Table of Contents --

SECTION 15895

AIR SUPPLY, DISTRIBUTION, VENTILATION, AND EXHAUST SYSTEM
**02/03**

PART 1 GENERAL

1.1 REFERENCES

The publications listed below form a part of this specification to the extent referenced. The publications are referred to within the text by the basic designation only.

AIR CONDITIONING AND REFRIGERATION INSTITUTE (ARI)

| | |
|---|---|
| ARI Guideline D | (1996) Application and Installation of Central Station Air-Handling Units |

AIR MOVEMENT AND CONTROL ASSOCIATION (AMCA)

| | |
|---|---|
| AMCA 210 | (1999) Laboratory Methods of Testing Fans for Aerodynamic Performance Rating |
| AMCA 300 | (1996) Reverberant Room Method for Sound Testing of Fans |

AMERICAN SOCIETY OF MECHANICAL ENGINEERS (ASME)

| | |
|---|---|
| ASME B16.18 | (2002) Cast Copper Alloy Solder Joint Pressure Fittings |
| ASME B16.22 | (2002) Wrought Copper and Copper Alloy Solder Joint Pressure Fittings |
| ASME B16.26 | (1988) Cast Copper Alloy Fittings for Flared Copper |

ASTM INTERNATIONAL (ASTM)

| | |
|---|---|
| ASTM A 53/A 53M | (2002) Pipe, Steel, Black and Hot-Dipped, Zinc-Coated, Welded and Seamless |
| ASTM B 62 | (1993) Composition Bronze or Ounce Metal Castings |
| ASTM B 75 | (1999) Seamless Copper Tube |
| ASTM B 88 | (2002) Seamless Copper Water Tube |
| ASTM B 813 | (2000e1) Liquid and Paste Fluxes for Soldering of Copper and Copper Alloy Tube |
| ASTM C 1071 | (2000) Fibrous Glass Duct Lining Insulation (Thermal and Sound Absorbing Material) |
| ASTM E 437 | (1992; R 1997) Industrial Wire Cloth and |

Screens (Square Opening Series)

ASTM F 1199 (1988; R 1998) Cast (All Temperatures and Pressures) and Welded Pipe Line Strainers (150 psig and 150 degrees F Maximum)

AMERICAN SOCIETY OF HEATING, REFRIGERATING AND AIR-CONDITIONING ENGINEERS (ASHRAE)

ASHRAE 52.1 (1992) Gravimetric and Dust-Spot Procedures for Testing Air-Cleaning Devices Used in General Ventilation for Removing Particulate Matter

ASHRAE 70 (1991) Method of Testing for Rating the Performance of Air Outlets and Inlets

MANUFACTURERS STANDARDIZATION SOCIETY OF THE VALVE AND FITTINGS INDUSTRY (MSS)MSS SP-58 (1993) Pipe Hangers and Supports - Materials, Design and Manufacture

MSS SP-69 (2002) Pipe Hangers and Supports - Selection and ApplicationMSS SP-80 (1997) Bronze Gate, Globe, Angle and Check ValvesMSS SP-110 (1996) Ball Valves Threaded, Socket-Welding, Solder Joint, Grooved and Flared Ends

NATIONAL ELECTRICAL MANUFACTURERS ASSOCIATION (NEMA)

NEMA MG 1 (1998) Motors and Generators

NATIONAL FIRE PROTECTION ASSOCIATION (NFPA)

NFPA 90A (1999) Installation of Air Conditioning and Ventilating Systems

SHEET METAL & AIR CONDITIONING CONTRACTORS' NATIONAL ASSOCIATION (SMACNA)

SMACNA HVAC Duct Const Stds (1995; Addenda Nov 1997; 6th Printing 2001) HVAC Duct Construction Standards - Metal and Flexible

SMACNA Leakage Test Mnl (1985; 6th Printing 1997) HVAC Air Duct Leakage Test Manual

UNDERWRITERS LABORATORIES (UL)

UL 214 (1997; Rev thru Aug 2001) Tests for Flame-Propagation of Fabrics and Films

UL 586 (1996; Rev thru Apr 2000) High-Efficiency, Particulate, Air Filter Units

UL 900 (1994; Rev thru Nov 1999) Test Performance of Air Filter Units

UL Bld Mat Dir (1999) Building Materials Directory

UL Elec Const Dir (2001) Electrical Construction Equipment Directory

1.2 COORDINATION OF TRADES

Ductwork, piping offsets, fittings, and accessories shall be furnished as required to provide a complete installation and to eliminate interference with other construction.

1.3 DELIVERY AND STORAGE

Equipment delivered and placed in storage shall be stored with protection from the weather, humidity and temperature variations, dirt and dust, or other contaminants. Additionally, all pipes shall either be capped or plugged until installed.

1.4 FIELD MEASUREMENTS

After becoming familiar with all details of the work, the Contractor shall verify all dimensions in the field, and shall advise the Contracting Officer of any discrepancy before performing the work.

1.5 SUBMITTALS

Government approval is required for submittals with a "G" designation; submittals not having a "G" designation are for information only or as otherwise designated. When used, a designation following the "G" designation identifies the office that will review the submittal for the Government. The following shall be submitted in accordance with Section 01330 SUBMITTAL PROCEDURES:

SD-02 Shop Drawings

Drawings; G-AE
Installation; G-AO
Ductwork Components
Air Systems Equipment

Drawings showing equipment layout, including assembly and installation details and electrical connection diagrams; ductwork layout showing the location of all supports and hangers, typical hanger details, gauge reinforcement, reinforcement spacing rigidity classification, and static pressure and seal classifications; and piping layout showing the location of all guides and anchors, the load imposed on each support or anchor, and typical support details. Drawings shall include any information required to demonstrate that the system has been coordinated and will properly function as a unit and shall show equipment relationship to other parts of the work, including clearances required for operation and maintenance.

SD-03 Product Data

Components and Equipment; G-AE

Manufacturer's catalog data included with the detail drawings for the following items. The data shall be highlighted to show

model, size, options, etc., that are intended for consideration. Data shall be adequate to demonstrate compliance with contract requirements for the following:

a. Piping Components

b. Ductwork Components

c. Air Systems Equipment

Performance Tests

Proposed test procedures for piping hydrostatic test, ductwork leak test, and performance tests of systems, at least 2 weeks prior to the start of related testing.

Diagrams; G-AO

Proposed diagrams, at least 2 weeks prior to start of related testing. System diagrams that show the layout of equipment, piping, and ductwork, and typed condensed operation manuals explaining preventative maintenance procedures, methods of checking the system for normal, safe operation, and procedures for safely starting and stopping the system shall be framed under glass or laminated plastic. After approval, these items shall be posted where directed.

Manufacturer's Experience; G-AO

Statement demonstrating successful completion of similar services on at least 5 projects of similar size and scope, at least 2 weeks prior to submittal of other items required by this section.

Performance Tests; G-AO

Proposed test schedules for ductwork leak test and performance tests, at least 2 weeks prior to the start of related testing.

Field Training; G-AO

Proposed schedule for field training, at least 2 weeks prior to the start of related training.

SD-06 Test Reports

Performance Tests; G-AO
Testing, Adjusting, and Balancing; G-AO

Test reports for ductwork leak test and performance tests in booklet form, upon completion of testing. Reports shall document phases of tests performed including initial test summary, repairs/adjustments made, and final test results.

SD-07 Certificates

SD-10 Operation and Maintenance Data

Operating and Maintenance Instructions; G-AO

Six manuals listing step-by-step procedures required for system startup, operation, shutdown, and routine maintenance, at least 2 weeks prior to field training. The manuals shall include the manufacturer's name, model number, parts list, list of parts and tools that should be kept in stock by the owner for routine maintenance including the name of a local supplier, simplified wiring and controls diagrams, troubleshooting guide, and recommended service organization (including address and telephone number) for each item of equipment. Each service organization submitted shall be capable of providing 4 hour onsite response to a service call on an emergency basis.

## PART 2 PRODUCTS

### 2.1 STANDARD PRODUCTS

Components and equipment shall be standard products of a manufacturer regularly engaged in the manufacturing of products that are of a similar material, design and workmanship. The standard products shall have been in satisfactory commercial or industrial use for 2 years before bid opening. The 2-year manufacturer's experience shall include applications of components and equipment under similar circumstances and of similar size. The 2 years must be satisfactorily completed by a product which has been sold or is offered for sale on the commercial market through advertisements, manufacturers' catalogs, or brochures. Products having less than a 2-year field service record will be acceptable if a certified record of satisfactory field operation, for not less than 6000 hours exclusive of the manufacturer's factory tests, can be shown. The equipment items shall be supported by a service organization.

### 2.2 ASBESTOS PROHIBITION

Asbestos and asbestos-containing products shall not be used.

### 2.3 NAMEPLATES

Equipment shall have a nameplate installed by the manufacturer that identifies the manufacturer's name, address, type or style, model or serial number, and catalog number.

### 2.4 EQUIPMENT GUARDS AND ACCESS

Belts, pulleys, chains, gears, couplings, projecting setscrews, keys, and other rotating parts exposed to personnel contact shall be fully enclosed or guarded according to OSHA requirements. High temperature equipment and piping exposed to contact by personnel or where it creates a potential fire hazard shall be properly guarded or covered with insulation of a type specified.

### 2.5 PIPING COMPONENTS

#### 2.5.1 Copper Tube

Copper tube shall conform to ASTM B 88, Type K or L.

2.5.2 Joints and Fittings For Copper Tube

Wrought copper and bronze solder-joint pressure fittings shall conform to ASME B16.22 and ASTM B 75. Cast copper alloy solder-joint pressure fittings shall conform to ASME B16.18. Cast copper alloy fittings for flared copper tube shall conform to ASME B16.26 and ASTM B 62. Brass or bronze adapters for brazed tubing may be used for connecting tubing to flanges and to threaded ends of valves and equipment. Extracted brazed tee joints produced with an acceptable tool and installed as recommended by the manufacturer may be used.

2.5.3 Valves

Valves shall be Class 125 and shall be suitable for the intended application. Chain operators shall be provided for valves located 10 feet or higher above the floor. Valves in sizes larger than 1 inch and used on steel pipe systems, may be provided with rigid grooved mechanical joint ends. Such grooved end valves shall be subject to the same requirements as rigid grooved mechanical joints and fittings and, shall be provided by the same manufacturer as the grooved pipe joint and fitting system.

2.5.3.1 Angle Valves

Angle valves 2-1/2 inches and smaller shall conform to MSS SP-80 and shall be bronze with threaded, soldered, or flanged ends.

2.5.3.2 Ball Valves

Ball valves 1/2 inch and larger shall conform to MSS SP-110, and shall be ductile iron or bronze with threaded, soldered, or flanged ends.

2.5.3.3 Air Vents

Manual air vents shall be brass or bronze valves or cocks suitable for pressure rating of piping system and furnished with threaded plugs or caps. Automatic air vents shall be float type, cast iron, stainless steel, or forged steel construction, suitable for pressure rating of piping system.

2.5.4 Strainers

Strainer shall be in accordance with ASTM F 1199 , except as modified herein. Strainer shall be the cleanable, basket or "Y" type, the same size as the pipeline. The strainer bodies shall be fabricated of cast iron with bottoms drilled, and tapped. The bodies shall have arrows clearly cast on the sides indicating the direction of flow. Each strainer shall be equipped with removable cover and sediment screen. The screen shall be made of minimum 22 gauge monel, with small perforations numbering not less than 400 per square inch to provide a net free area through the basket of at least 3.3 times that of the entering pipe. The flow shall be into the screen and out through the perforations.

2.6 ELECTRICAL WORK

Electrical motor-driven equipment specified shall be provided complete with motor, motor starter, and controls. Unless otherwise specified, electric equipment, including wiring and motor efficiencies, shall be according to Section 16415A ELECTRICAL WORK, INTERIOR. Electrical characteristics and enclosure type shall be as shown. Unless otherwise indicated, motors of 1 hp and above shall be high efficiency type. Motor starters shall be

provided complete with thermal overload protection and other appurtenances necessary. Each motor shall be according to NEMA MG 1 and shall be of sufficient size to drive the equipment at the specified capacity without exceeding the nameplate rating of the motor. Manual or automatic control and protective or signal devices required for the operation specified, and any control wiring required for controls and devices, but not shown, shall be provided. Where two-speed or variable-speed motors are indicated, solid-state variable-speed controller may be provided to accomplish the same function. Solid-state variable-speed controllers shall be utilized for motors rated 10 hp or less. Adjustable frequency drives shall be used for larger motors.

## 2.7 CONTROLS

Controls shall be provided as specified in Section 15950A HEATING, VENTILATING AND AIR CONDITIONING (HVAC) CONTROL SYSTEMS.

## 2.8 DUCTWORK COMPONENTS

### 2.8.1 Metal Ductwork

All aspects of metal ductwork construction, including all fittings and components, shall comply with SMACNA HVAC Duct Const Stds unless otherwise specified. Elbows shall be radius type with a centerline radius of 1.5 times the width or diameter of the duct where space permits. Otherwise, elbows having a minimum radius equal to the width or diameter of the duct or square elbows with factory fabricated turning vanes may be used. Static pressure 1/2, 1, and 2 inch w.g. ductwork shall meet the requirements of Seal Class C. Sealants shall conform to fire hazard classification specified in Section 15080A THERMAL INSULATION FOR MECHANICAL SYSTEMS and shall be suitable for the range of air distribution and ambient temperatures that it will be exposed to. Pressure sensitive tape shall not be used as a sealant. Spiral lock seam duct, and flat oval shall be made with duct sealant and locked with not less than 3 equally spaced drive screws or other approved methods indicated in SMACNA HVAC Duct Const Stds. The sealant shall be applied to the exposed male part of the fitting collar so that the sealer will be on the inside of the joint and fully protected by the metal of the duct fitting. One brush coat of the sealant shall be applied over the outside of the joint to at least 2 inch band width covering all screw heads and joint gap. Dents in the male portion of the slip fitting collar will not be acceptable. Outdoor air intake ducts and plenums shall be fabricated with watertight soldered or brazed joints and seams.

#### 2.8.1.1 Transitions

Diverging air flow transitions shall be made with each side pitched out a maximum of 15 degrees, for an included angle of 30 degrees. Transitions for converging air flow shall be made with each side pitched in a maximum of 30 degrees, for an included angle of 60 degrees, or shall be as indicated. Factory-fabricated reducing fittings for systems using round duct sections when formed to the shape of the ASME short flow nozzle, need not comply with the maximum angles specified.

#### 2.8.1.2 General Service Duct Connectors

A flexible duct connector approximately 6 inches in width shall be provided where sheet metal connections are made to fans or where ducts of dissimilar metals are connected. For round/oval ducts, the flexible material shall be

secured by stainless steel or zinc-coated, iron clinch-type draw bands. For rectangular ducts, the flexible material locked to metal collars shall be installed using normal duct construction methods. The composite connector system shall comply with UL 214 and be classified as "flame-retarded fabrics" in UL Bld Mat Dir.

2.8.2 Ductwork Accessories

2.8.2.1 Duct Access Doors

Access doors shall be provided in ductwork and plenums where indicated and at all air flow measuring primaries, automatic dampers, fire dampers, coils, thermostats, and other apparatus requiring service and inspection in the duct system, and unless otherwise shown, shall conform to SMACNA HVAC Duct Const Stds. Access doors shall be provided upstream and downstream of air flow measuring primaries and heating and cooling coils. Doors shall be minimum 15 x 18 inches, unless otherwise shown. Where duct size will not accommodate this size door, the doors shall be made as large as practicable. Doors in insulated ducts shall be the insulated type.

2.8.2.2 Splitters and Manual Balancing Dampers

Splitters and manual balancing dampers shall be furnished with accessible operating mechanisms. Where operators occur in finished portions of the building, operators shall be chromium plated with all exposed edges rounded. Splitters shall be operated by quadrant operators or 3/16 inch rod brought through the side of the duct with locking setscrew and bushing. Two rods are required on splitters over 8 inches. Manual volume control dampers shall be operated by locking-type quadrant operators. Dampers and splitters shall be 2 gauges heavier than the duct in which installed. Unless otherwise indicated, multileaf dampers shall be opposed blade type with maximum blade width of 12 inches. Access doors or panels shall be provided for all concealed damper operators and locking setscrews. Unless otherwise indicated, the locking-type quadrant operators for dampers, when installed on ducts to be thermally insulated, shall be provided with stand-off mounting brackets, bases, or adapters to provide clearance between the duct surface and the operator not less than the thickness of the insulation. Stand-off mounting items shall be integral with the operator or standard accessory of the damper manufacturer. Volume dampers shall be provided where indicated.

2.8.2.3 Air Deflectors and Branch Connections

Air deflectors shall be provided at duct mounted supply outlets, at takeoff or extension collars to supply outlets, at duct branch takeoff connections, and at 90 degree elbows, as well as at locations as indicated on the drawings or otherwise specified. Conical branch connections or 45 degree entry connections may be used in lieu of deflectors or extractors for branch connections. All air deflectors, except those installed in 90 degree elbows, shall be provided with an approved means of adjustment. Adjustment shall be made from easily accessible means inside the duct or from an adjustment with sturdy lock on the face of the duct. When installed on ducts to be thermally insulated, external adjustments shall be provided with stand-off mounting brackets, integral with the adjustment device, to provide clearance between the duct surface and the adjustment device not less than the thickness of the thermal insulation. Air deflectors shall be factory-fabricated units consisting of curved turning vanes or louver blades designed to provide uniform air distribution and change of direction with minimum turbulence or pressure loss. Air

deflectors shall be factory or field assembled. Blade air deflectors, also called blade air extractors, shall be approved factory fabricated units consisting of equalizing grid and adjustable blade and lock. Adjustment shall be easily made from the face of the diffuser or by position adjustment and lock external to the duct. Stand-off brackets shall be provided on insulated ducts and are described herein. Fixed air deflectors, also called turning vanes, shall be provided in 90 degree elbows.

2.8.3 Duct Sleeves, Framed Prepared Openings, Closure Collars

2.8.3.1 Duct Sleeves

Duct sleeves shall be provided for round ducts 15 inches in diameter or less passing through floors, walls, ceilings, or roof, and installed during construction of the floor, wall, ceiling, or roof. Square and rectangular ducts passing through floors, walls, ceilings, or roof shall be installed through framed prepared openings. The Contractor shall be responsible for the proper size and location of sleeves and prepared openings. Sleeves and framed openings are also required where grilles, registers, and diffusers are installed at the openings. Framed prepared openings shall be fabricated from 20 gauge galvanized steel, unless otherwise indicated. Where sleeves are installed in bearing walls or partitions, black steel pipe, ASTM A 53/A 53M, Schedule 20 shall be used. Sleeve shall provide 1 inch clearance between the duct and the sleeve or 1 inch clearance between the insulation and the sleeve for insulated ducts.

2.8.3.2 Framed Prepared Openings

Openings shall have 1 inch clearance between the duct and the opening or 1 inch clearance between the insulation and the opening for insulated ducts.

2.8.3.3 Closure Collars

Collars shall be fabricated of galvanized sheet metal not less than 4 inches wide, unless otherwise indicated, and shall be installed on exposed ducts on each side of walls or floors where sleeves or prepared openings are provided. Collars shall be installed tight against surfaces. Collars shall fit snugly around the duct or insulation. Sharp edges of the collar around insulated duct shall be ground smooth to preclude tearing or puncturing the insulation covering or vapor barrier. Collars for square and rectangular ducts shall be fabricated from 18 gauge galvanized steel. Collars shall be installed with fasteners on maximum 6 inch centers, except that not less than 4 fasteners shall be used.

2.8.4 Plenums and Casings for Field-Fabricated Units

2.8.4.1 Duct Liner

Unless otherwise specified, duct liner shall conform to ASTM C 1071, Type I or II.

2.8.5 Diffusers, Registers, and Grilles

Units shall be factory-fabricated of steel, corrosion-resistant steel, or aluminum and shall distribute the specified quantity of air evenly over space intended without causing noticeable drafts, air movement faster than 50 fpm in occupied zone, or dead spots anywhere in the conditioned area. Outlets for diffusion, spread, throw, and noise level shall be as required

for specified performance. Performance shall be certified according to ASHRAE 70. Inlets and outlets shall be sound rated and certified according to ASHRAE 70. Sound power level shall be as indicated. Diffusers and registers shall be provided with volume damper with accessible operator, unless otherwise indicated; or if standard with the manufacturer, an automatically controlled device will be acceptable. Volume dampers shall be opposed blade type for all diffusers and registers, except linear slot diffusers. Linear slot diffusers shall be provided with round or elliptical balancing dampers. Where the inlet and outlet openings are located less than 7 feet above the floor, they shall be protected by a grille or screen according to NFPA 90A.

2.8.5.1 Diffusers

Diffuser types shall be as indicated. Ceiling mounted units shall be furnished with anti-smudge devices, unless the diffuser unit minimizes ceiling smudging through design features. Diffusers shall be provided with air deflectors of the type indicated. Air handling troffers or combination light and ceiling diffusers shall conform to the requirements of UL Elec Const Dir for the interchangeable use as cooled or heated air supply diffusers or return air units. Ceiling mounted units shall be installed with rims tight against ceiling. Sponge rubber gaskets shall be provided between ceiling and surface mounted diffusers for air leakage control. Suitable trim shall be provided for flush mounted diffusers. Duct collar connecting the duct to diffuser shall be airtight and shall not interfere with volume controller. Return or exhaust units shall be similar to supply diffusers.

2.8.5.2 Registers and Grilles

Units shall be four-way directional-control type, except that return and exhaust registers may be fixed horizontal or vertical louver type similar in appearance to the supply register face. Registers shall be provided with sponge-rubber gasket between flanges and wall or ceiling. Wall supply registers shall be installed at least 6 inches below the ceiling unless otherwise indicated. Return and exhaust registers shall be located 6 inches above the floor unless otherwise indicated. Four-way directional control may be achieved by a grille face which can be rotated in 4 positions or by adjustment of horizontal and vertical vanes. Grilles shall be as specified for registers, without volume control damper.

2.8.6 Louvers

Louvers for installation in exterior walls which are associated with the air supply and distribution system shall be as specified in Section 13120A STANDARD METAL BUILDING SYSTEMS.

2.8.7 Bird Screens and Frames

Bird screens shall conform to ASTM E 437, No. 2 mesh, aluminum or stainless steel. Aluminum screens shall be rated "medium-light". Stainless steel screens shall be rated "light". Frames shall be removable type, or stainless steel or extruded aluminum.

2.9 AIR SYSTEMS EQUIPMENT

2.9.1 Fans

Fans shall be tested and rated according to AMCA 210. Fans may be

connected to the motors either directly or indirectly with V-belt drive. V-belt drives shall be designed for not less than 150 percent of the connected driving capacity. Motor sheaves shall be variable pitch for 15 hp and below and fixed pitch as defined by ARI Guideline D. Variable pitch sheaves shall be selected to drive the fan at a speed which will produce the specified capacity when set at the approximate midpoint of the sheave adjustment. When fixed pitch sheaves are furnished, a replaceable sheave shall be provided when needed to achieve system air balance. Motors for V-belt drives shall be provided with adjustable rails or bases. Removable metal guards shall be provided for all exposed V-belt drives, and speed-test openings shall be provided at the center of all rotating shafts. Fans shall be provided with personnel screens or guards on both suction and supply ends, except that the screens need not be provided, unless otherwise indicated, where ducts are connected to the fan. Fan and motor assemblies shall be provided with vibration-isolation supports or mountings as indicated. Vibration-isolation units shall be standard products with published loading ratings. Each fan shall be selected to produce the capacity required at the fan static pressure indicated. Sound power level shall be as indicated. The sound power level values shall be obtained according to AMCA 300. Standard AMCA arrangement, rotation, and discharge shall be as indicated.

2.9.1.1 Ceiling Exhaust Fans

Suspended cabinet-type ceiling exhaust fans shall be centrifugal type, direct-driven. Fans shall have acoustically insulated housing. Integral backdraft damper shall be chatter-proof. The integral face grille shall be of egg-crate design or louver design. Fan motors shall be mounted on vibration isolators. Unit shall be provided with mounting flange for hanging unit from above. Fans shall be U.L. listed.

2.9.2 Coils

Coils shall be as specified in 15700A - Unitary Heating and Cooling Equipment.

2.9.3 Air Filters

Air filters shall be listed according to requirements of UL 900, except high efficiency particulate air filters of 99.97 percent efficiency by the DOP Test method shall be as listed under the Label Service and shall meet the requirements of UL 586.

2.9.3.1 Extended Surface Pleated Panel Filters

Filters shall be 2 inch depth, sectional, disposable type of the size indicated and shall have an average efficiency of 25 to 30 percent when tested according to ASHRAE 52.1. Initial resistance at 500 feet per minute shall not exceed 0.36 inches water gauge. Filters shall be UL Class 2. Media shall be nonwoven cotton and synthetic fiber mat. A wire support grid bonded to the media shall be attached to a moisture resistant fiberboard frame. All four edges of the filter media shall be bonded to the inside of the frame to prevent air bypass and increase rigidity.

2.9.3.2 Holding Frames

Frames shall be fabricated from not lighter than 16 gauge sheet steel with rust-inhibitor coating. Each holding frame shall be equipped with suitable filter holding devices. Holding frame seats shall be gasketed. All joints

shall be airtight.

PART 3 EXECUTION

3.1 INSTALLATION

Work shall be installed as shown and according to the manufacturer's diagrams and recommendations.

3.1.1 Piping

Pipe and fitting installation shall conform to the requirements of The American Society of Mechanical Engineers. Pipe shall be cut accurately to measurements established at the jobsite, and worked into place without springing or forcing, completely clearing all windows, doors, and other openings. Cutting or other weakening of the building structure to facilitate piping installation will not be permitted without written approval. Pipe or tubing shall be cut square, shall have burrs removed by reaming, and shall permit free expansion and contraction without causing damage to the building structure, pipe, joints, or hangers. Changes in direction shall be made with fittings, except that bending of pipe 4 inches and smaller will be permitted, provided a pipe bender is used and wide sweep bends are formed. The centerline radius of bends shall not be less than 6 diameters of the pipe. Bent pipe showing kinks, wrinkles, flattening, or other malformations will not be accepted. Horizontal supply mains shall pitch down in the direction of flow as indicated. The grade shall be not less than 1 inch in 40 feet. Reducing fittings shall be used for changes in pipe sizes. Open ends of pipelines and equipment shall be capped or plugged during installation to keep dirt or other foreign materials out of the system. Pipe not otherwise specified shall be uncoated. Connections to appliances shall be made with malleable iron unions for steel pipe 2-1/2 inches or less in diameter, and with flanges for pipe 3 inches and larger. Connections between ferrous and copper piping shall be electrically isolated from each other with dielectric unions or flanges. All piping located in air plenums shall conform to NFPA 90A requirements. Pipe and fittings installed in inaccessible conduits or trenches under concrete floor slabs shall be welded.

3.1.1.1 Joints

a. Threaded Joints: Threaded joints shall be made with tapered threads and made tight with a stiff mixture of graphite and oil or polytetrafluoroethylene tape or equivalent thread joint compound or material, applied to the male threads only.

b. Soldered Joints: Joints in copper tubing shall be cut square with ends reamed, and all filings and dust wiped from interior of pipe. Joints shall be soldered with 95/5 solder or brazed with silver solder applied and drawn through the full fitting length. Care shall be taken to prevent annealing of tube or fittings when making connections. Joints 2-1/2 inches and larger shall be made with heat uniformly around the entire circumference of the joint with a multi-flame torch. Connections in floor slabs shall be brazed. Excess solder shall be wiped from joint before solder hardens. Solder flux shall be liquid or paste form, non-corrosive and conform to ASTM B 813.

3.1.2 Supports

3.1.2.1 General

Hangers used to support piping 2 inches and larger shall be fabricated to permit adequate adjustment after erection while still supporting the load. Pipe guides and anchors shall be installed to keep pipes in accurate alignment, to direct the expansion movement, and to prevent buckling, swaying, and undue strain. Piping subjected to vertical movement when operating temperatures exceed ambient temperatures shall be supported by variable spring hangers and supports or by constant support hangers. Supports shall not be attached to the underside of concrete filled floors or concrete roof decks unless approved by the Contracting Officer.

3.1.2.2 Pipe Hangers, Inserts and Supports

Pipe hangers, inserts, and supports shall conform to MSS SP-58 and MSS SP-69, except as modified herein. Types 5, 12, and 26 shall not be used.

a. Hangers: Type 3 shall not be used on insulated piping.

b. Inserts: Type 18 inserts shall be secured to concrete forms before concrete is placed. Continuous inserts which allow more adjustment may be used if they otherwise meet the requirements for Type 18 inserts.

c. C-Clamps: Type 19 and 23 C-clamps shall be torqued per MSS SP-69 and have both locknuts and retaining devices, furnished by the manufacturer. Field-fabricated C-clamp bodies or retaining devices are not acceptable.

d. Angle Attachments: Type 20 attachments used on angles and channels shall be furnished with an added malleable-iron heel plate or adapter.

e. Hangers: Type 24 may be used only on trapeze hanger systems or on fabricated frames.

f. Type 40 shields shall:

(1) be used on all insulated pipes less than 4 inches.

g. Horizontal Pipe Supports: Horizontal pipe supports shall be spaced as specified in MSS SP-69 and a support shall be installed not over 1 foot from the pipe fitting joint at each change in direction of the piping. Pipe supports shall be spaced not over 5 feet apart at valves.

h. Vertical Pipe Supports: Vertical pipe shall be supported at each floor, except at slab-on-grade, and at intervals of not more than 15 feet, not more than 8 feet from end of risers, and at vent terminations.

i. Pipe Guides: Type 35 guides using steel reinforced polytetrafluoroethylene (PTFE) or graphite slides shall be provided where required to allow longitudinal pipe movement.

Lateral restraints shall be provided as required. Slide materials shall be suitable for the system operating temperatures, atmospheric conditions, and bearing loads encountered.

j. Insulated Pipe: Insulation on horizontal pipe shall be continuous through hangers for hot and cold piping. Other requirements on insulated pipe are specified in Section 15080A THERMAL INSULATION FOR MECHANICAL SYSTEMS.

3.1.3 Anchors

Anchors shall be provided wherever necessary or indicated to localize expansion or to prevent undue strain on piping. Anchors shall consist of heavy steel collars with lugs and bolts for clamping and attaching anchor braces, unless otherwise indicated. Anchor braces shall be installed in the most effective manner to secure the desired results using turnbuckles where required. Supports, anchors, or stays shall not be attached where they will injure the structure or adjacent construction during installation or by the weight of expansion of the pipeline.

3.1.4 Pipe Sleeves

Sleeves shall not be installed in structural members except where indicated or approved. Rectangular and square openings shall be as detailed. Each sleeve shall extend through its respective wall, floor, or roof, and shall be cut flush with each surface. Pipes passing through concrete or masonry wall or concrete floors or roofs shall be provided with pipe sleeves fitted into place at the time of construction. Unless otherwise indicated, sleeves shall provide a minimum of 1/4 inch all-around clearance between bare pipe and sleeves or between jacket over insulation and sleeves. Sleeves in bearing walls, waterproofing membrane floors, and wet areas shall be steel pipe or cast iron pipe. Sleeves in non-bearing walls, floors, or ceilings may be steel pipe, cast iron pipe, galvanized sheet metal with lock-type longitudinal seam and of the metal thickness indicated, or moisture resistant fiber or plastic. Except in pipe chases or interior walls, the annular space between pipe and sleeve or between jacket over insulation and sleeve, in non-fire rated walls, shall be sealed as indicated and specified in Section 07900A JOINT SEALING. Pipes passing through wall waterproofing membrane shall be sleeved as specified above, and a waterproofing clamping flange shall be installed as indicated.

3.1.4.1 Fire Seal

Where pipes pass through firewalls, fire partitions, or floors, a fire seal shall be provided as specified in Section 07840 FIRESTOPPING.

3.1.4.2 Escutcheons

Escutcheons shall be provided at finished surfaces where exposed piping, bare or insulated, passes through floors, walls, or ceilings except in boiler, utility, or equipment rooms. Where sleeves project slightly from floors, special deep-type escutcheons shall be used. Escutcheons shall be secured to pipe or pipe covering.

3.1.5 Air Vents

3.1.5.1 Vents

Air vents shall be provided at high points, on water coils, and where indicated to ensure adequate venting of the piping system.

3.1.6 Valves

Isolation gate or ball valves shall be installed on each side of each piece of equipment such as pumps, heaters, heating or cooling coils, and other similar items, at the midpoint of all looped mains, and at any other points indicated or required for draining, isolating, or sectionalizing purposes. Isolation valves may be omitted where balancing cocks are installed to provide both balancing and isolation functions. Each valve except check valves shall be identified. Valves in horizontal lines shall be installed with stems horizontal or above.

3.1.7 Equipment and Installation

Frames and supports shall be provided for air handling units, fans, coils, dampers, and other similar items requiring supports. Air handling units shall be floor mounted or ceiling hung, as indicated. The method of anchoring and fastening shall be as detailed.

3.1.8 Access Panels

Access panels shall be provided for concealed valves, vents, controls, dampers, and items requiring inspection or maintenance. Access panels shall be of sufficient size and located so that the concealed items may be serviced and maintained or completely removed and replaced. Access panels shall be as specified in Section 05500A MISCELLANEOUS METALS.

3.1.9 Flexible Connectors

Pre-insulated flexible connectors and flexible duct shall be attached to other components in accordance with the latest printed instructions of the manufacturer to ensure a vapor tight joint. Hangers, when required to suspend the connectors, shall be of the type recommended by the connector or duct manufacturer and shall be provided at the intervals recommended.

3.1.10 Sleeved and Framed Openings

Space between the sleeved or framed opening and the duct or the duct insulation shall be packed as specified in Section 07840 FIRESTOPPING for fire rated penetrations. For non-fire rated penetrations, the space shall be packed as specified in Section 07900A JOINT SEALING.

3.1.11 Metal Ductwork

Installation shall be according to SMACNA HVAC Duct Const Stds unless otherwise indicated. Duct supports for sheet metal ductwork shall be according to SMACNA HVAC Duct Const Stds, unless otherwise specified. Friction beam clamps indicated in SMACNA HVAC Duct Const Stds shall not be used. Risers on high velocity ducts shall be anchored in the center of the vertical run to allow ends of riser to move due to thermal expansion. Supports on the risers shall allow free vertical movement of the duct. Supports shall be attached only to structural framing members and concrete slabs. Supports shall not be anchored to metal decking unless a means is

provided and approved for preventing the anchor from puncturing the metal decking. Where supports are required between structural framing members, suitable intermediate metal framing shall be provided. Where C-clamps are used, retainer clips shall be provided.

3.1.12 Insulation

Thickness and application of insulation materials for ductwork, piping, and equipment shall be according to Section 15080A THERMAL INSULATION FOR MECHANICAL SYSTEMS. Outdoor air intake ducts and plenums shall be externally insulated up to the point where the outdoor air reaches the conditioning unit .

3.1.13 Duct Test Holes

Holes with closures or threaded holes with plugs shall be provided in ducts and plenums as indicated or where necessary for the use of pitot tube in balancing the air system. Extensions, complete with cap or plug, shall be provided where the ducts are insulated.

3.1.14 Power Transmission Components Adjustment

V-belts and sheaves shall be tested for proper alignment and tension prior to operation and after 72 hours of operation at final speed. Belts on drive side shall be uniformly loaded, not bouncing. Alignment of direct driven couplings shall be to within 50 percent of manufacturer's maximum allowable range of misalignment.

3.2 FIELD PAINTING AND IDENTIFICATION SYSTEMS

3.2.1 Finish Painting and Pipe Color Code Marking

Finish painting of items only primed at the factory, surfaces not specifically noted otherwise, and color code marking for piping shall be as specified in Section 09900 PAINTS AND COATINGS.

3.3 DUCTWORK LEAK TEST

Ductwork leak test shall be performed for the entire air distribution and exhaust system, including fans, coils, filters, etc. Test procedure, apparatus, and report shall conform to SMACNA Leakage Test Mnl. The maximum allowable leakage rate is 20 cfm. Ductwork leak test shall be completed with satisfactory results prior to applying insulation to ductwork exterior.

3.4 TESTING, ADJUSTING, AND BALANCING

Testing, adjusting, and balancing shall be as specified in Section 15990A TESTING, ADJUSTING, AND BALANCING OF HVAC SYSTEMS. Testing, adjusting, and balancing shall begin only when the air supply and distribution, including controls, has been completed, with the exception of performance tests.

3.5 PERFORMANCE TESTS

After testing, adjusting, and balancing has been completed as specified, each system shall be tested as a whole to see that all items perform as integral parts of the system and temperatures and conditions are evenly controlled throughout the building. Corrections and adjustments shall be made as necessary to produce the conditions indicated or specified.

Capacity tests and general operating tests shall be conducted by an experienced engineer. Tests shall cover a period of not less than 2 days for each system and shall demonstrate that the entire system is functioning according to the specifications. Coincidental chart recordings shall be made at points indicated on the drawings for the duration of the time period and shall record the temperature at space thermostats or space sensors, the humidity at space humidistats or space sensors and the ambient temperature and humidity in a shaded and weather protected area.

## 3.6 CLEANING AND ADJUSTING

Equipment shall be wiped clean, with traces of oil, dust, dirt, or paint spots removed. Temporary filters shall be provided prior to startup of all fans that are operated during construction, and new filters shall be installed after all construction dirt has been removed from the building, and the ducts, plenums, casings, and other items specified have been vacuum cleaned. System shall be maintained in this clean condition until final acceptance. Bearings shall be properly lubricated with oil or grease as recommended by the manufacturer. Belts shall be tightened to proper tension. Miscellaneous equipment requiring adjustment shall be adjusted to setting indicated or directed. Fans shall be adjusted to the speed indicated by the manufacturer to meet specified conditions.

## 3.7 FIELD TRAINING

The Contractor shall conduct a training course for operating and maintenance personnel as designated by the Contracting Officer. Training shall be provided for a period of 6 hours of normal working time and shall start after the system is functionally complete but prior to the performance tests. The field instruction shall cover all of the items contained in the approved Operating and Maintenance Instructions.

-- End of Section --

SECTION TABLE OF CONTENTS

DIVISION 15 - MECHANICAL

SECTION 15899

SYSTEM START-UP, FUELING SYSTEM

**04/99; Rev. 12/00**

PART 1 GENERAL

1.1 SUBMITTALS

PART 2 PRODUCTS

2.1 DESIGN CONDITIONS
2.2 SOURCES OF MATERIAL AND EQUIPMENT
2.2.1 Material and Equipment
2.2.2 Government-Furnished Material and Equipment
2.2.2.1 Aircraft Turbine Fuel
2.2.2.2 Tank Trucks
2.2.2.3 Hydrant Hose Trucks
2.2.2.4 Utilities

PART 3 EXECUTION

3.1 PREPARATIONS FOR FLUSHING
3.1.1 Protection of Equipment
3.1.2 Strainers
3.1.3 Water Draw-off
3.2 FLUSHING
3.2.1 Fueling System Piping
3.2.1.1 Transfer Line
3.2.1.2 Pump House Piping
3.2.1.3 Apron Loop Piping
3.2.1.4 Hydrant Outlets
3.2.1.5 Product Recovery Tank Lines
3.2.1.6 Pantographs
3.3 CLEANING
3.3.1 Preparation for Cleaning
3.3.2 Cleaning Requirements
3.3.3 Cleaning Procedure
3.3.3.1 Transfer Line
3.3.3.2 Pump House Piping
3.3.3.3 Apron Loop Piping
3.3.3.4 Product Recovery Lines
3.3.3.5 Pantographs
3.4 CONTROL VALVE AND PANTOGRAPH ADJUSTMENT
3.4.1 Rate of Flow Control Feature on Fueling Pump Non-Surge Check Valve
3.4.2 Control Valves on Issue Filter Separator Downstream Side
3.4.3 Venturi Needle Valve
3.5 EQUIPMENT TESTS
3.5.1 Operating Tank Low Level Alarm
3.5.2 Fuel Delivery

3.5.3 Fueling Pump Operation
3.5.4 Defueling Performance
3.5.5 Emergency Shutdown
3.5.6 Hydrant Control Valve
3.5.7 Filter Separator Float Control Valves with Manual Tester
3.5.8 Overfill Valve
3.6 PERFORMANCE TESTING
3.6.1 Final Performance Test
3.6.1.1 Satisfactory Performance
3.6.2 Final Acceptance
3.6.2.1 Operating Tank High Liquid Level Shut-Off Valve Test and Adjustments
3.6.2.2 Tank Level Indicator Adjustments
3.6.2.3 Water Draw-Off System Test

-- End of Section Table of Contents --

SECTION 15899

SYSTEM START-UP, FUELING SYSTEM
**04/99; Rev. 12/00**

PART 1 GENERAL

Waiver to Use MilStds and MilSpecs in Air Force Fuel Projects, HQ AFCESA/CESM (01/29/96).

ATTACHMENTS: Checklist for Equipment Test

1.1 SUBMITTALS

Government approval is required for submittals with a "G" designation; submittals not having a "G" designation are for information only. When used, a designation following the "G" designation identifies the office that will review the submittal for the Government. The following shall be submitted in accordance with Section 01330 SUBMITTAL PROCEDURES:

SD-01 Preconstruction Submittals

System Start-up Plan; G-AE.

The Contractor shall submit a detailed written plan prepared by the system supplier for implementation of system start-up. The plan shall be submitted for Government approval 60 days prior to system start-up. The plan shall include a list of personnel by trade, list of key personnel, safety equipment, list of miscellaneous equipment such as two-way radios personnel transportation vehicles etc. and detailed procedures and schedules. The Contractor and system supplier shall be responsible for implementing system start-up in coordination with ongoing base operations.

SD-06 Test Reports

Test Reports; G-AE

Submit written test reports to the Contracting Officer prior to the final acceptance procedure. Information reported shall include:

a. Elapsed operating time.
b. Tank liquid level readings.
c. System flow rate and meter readings.
d. System pressure gage readings.
e. Number identification of pumps running.
f. Pump RPM, amperage, and voltage.
g. Condition of fuel samples.
h. Hydrant control valve performance (including flow rate and pressure) during emergency shutoff, downstream valve closure, and relief operation.

Final Reports;

A final report shall be submitted which will include the final settings of the valves and switches and a copy of the strip chart graphs or equivalent with an explanation of what the graph indicates and what the system is doing.

SD-11 Closeout Submittals

Certification of Entire System; G-AE

Prior to the acceptance of the newly constructed system by the Government, all installed mechanical and electrical equipment shall be inspected and approved by the Contracting Officer. The Contractor shall give the Contracting Officer 30 days notice in order to schedule the Command Fuel Facilities Engineer and the Command Fuels Management Officer (who will act only as a technical consultants to the Contracting Officer and shall not have any contract authority) for participation in the inspection and equipment tests and final acceptance procedures and approval. Any deficiencies observed shall be corrected by the Contractor without cost to the Government.

## PART 2 PRODUCTS

### 2.1 DESIGN CONDITIONS

Temporary flushing lines and equipment shall be equal in strength, stability, and materials to the associated permanent components. However, spools may be carbon steel. Additional design conditions shall be as specified in Section 15050 MECHANICAL EQUIPMENT, FUELING.

### 2.2 SOURCES OF MATERIAL AND EQUIPMENT

#### 2.2.1 Material and Equipment

The Contractor shall provide material, equipment and labor not specified to be Government-furnished and required for proper start-up of the system. Equipment shall include but not be limited to the following:

a. Temporary strainers.
b. Pipe spools.
c. Flow meters.
d. Pressure gages.
e. Electronic sensors for pressure and flow recording. This equipment shall be used to monitor and record, utilizing the trending software specified in Section 15970, the system during the "Equipment Test" and "Performance Testing" portions of this Specification Section. Recorded data shall be used by the Contractor and equipment factory representatives to achieve final control valve and equipment adjustments. Hard copy of the recorded data shall be turned over to the government after startup. Recorded data shall include:

(1) Fueling pumps discharge pressures.
(2) Supply Venturi flow rates.
(3) Hydrant Control Valve pressures.
(4) Back Pressure Control Valve upstream pressures.
(5) Back Pressure Control Valve downstream pressures.
(6) Return Venturi flow rates.

f. The Contractor must have on hand sufficient filter elements and coalescer cartridges to adequately clean the system. During cleaning operation, Contractor shall provide a flow versus pressure drop graph for each filter separator. Graph format shall be as shown at end of this Section. Contractor shall change coalescers and cartridges upon reaching a differential pressure of 15 psi or when pressure drop is less than previous graph or fails to increase properly. Isolate each filter separator, one at a time and use one fueling pump to obtain rated flow rate (600 GPM). A minimum of one complete set of coaleser elements and separator cartridges for each filter separator shall be turned over to the Government after new coalescer elements and separator cartridges are installed in each filter separator vessel after completion of acceptance testing.

2.2.2 Government-Furnished Material and Equipment

The Government will furnish the following materials, equipment and services during the performance of the work under this section.

2.2.2.1 Aircraft Turbine Fuel

The Government will provide the fuel necessary for system testing. The Contractor shall notify the Contracting Officer a minimum of sixty(60) days in advance of the requirements. Additional fuel will be provided by the Government as required for satisfactory flushing of the system. Upon satisfactory completion of the flushing and cleaning operations, the Government will supply the additional quantities of fuel required to complete the other work under this section. Fuel will not be delivered to the system until the Contractor has satisfactorily completed all work and, in particular, the cleaning and coating of the interior surfaces of the operating storage tanks and the removal of preservatives and foreign matter from those portions coming in contact with the fuel valves, pumps, filter separators and other such equipment. Fuel delivered to the system shall remain the property of the Government and the Contractor shall reimburse the Government for shortages not attributable to normal handling losses. The Government shall be reimbursed for fuel lost as a result of defective materials or workmanship. An empty Operating Tank shall never be filled at a velocity greater than 3-feet per second in the fill line until fuel is 3-feet above the fill nozzle.

2.2.2.2 Tank Trucks

Refueler tank trucks and operation of same will be furnished by the Government.

2.2.2.3 Hydrant Hose Trucks

The Government will furnish and operate the hydrant hose trucks required for ground refueling and defueling of aircraft at hydrant pits.

2.2.2.4 Utilities

Electric power required for the performance of the work under this section will be furnished at no charge to the Contractor.

# PART 3 EXECUTION

## 3.1 PREPARATIONS FOR FLUSHING

Upon completion of the system to the satisfaction of the Contracting Officer and the Command Fuel Facilities Engineer, the Contractor shall make the following preparations for flushing the system.

### 3.1.1 Protection of Equipment

The following items shall be removed from the system prior to start of flushing operations and, where applicable, replaced with spools of pipe, diameter equal to the item removed.

a. Control valves,including hydrant pit control valves if flushing outlets into tank trucks.
b. Sensors which are exposed to the fluid.
c. Coalescer and separator elements in filter separators.
d. Venturi Tubes and Pressure Indicating Transmitters.
e. Meter.

After flushing, the above items shall be reinstalled in the system and the spool sections turned over to the Contracting Officer.

### 3.1.2 Strainers

Temporary 40 mesh cone type strainers shall be installed in the suction line ahead of each fueling pump for first pass only. Any damaged strainers shall be replaced by the Contractor at no additional cost to the Government.

### 3.1.3 Water Draw-off

Remove any accumulated water from Operating Tanks' sumps and bottoms.

## 3.2 FLUSHING

Flushing procedures shall precede cleaning procedures. The transfer line, pump house piping, apron loop, supply and return lines to the operating tanks, hydrant laterals, product recovery lines and pantograph lines shall be flushed with fuel until the fuel being delivered is free of construction debris to the satisfaction of the Contracting Officer. Samples of fuel shall be taken and tested by the designated government agency and shall be free of gross contamination, maximum of 8.0 mg/gallon solids and free water not to exceed 2 ml per quart.

### 3.2.1 Fueling System Piping

The flushing of apron system pipelines shall be accomplished by pumping fuel from one of the operating tanks through the fueling system piping and back to another tank. Air shall be bled from system high points. The procedure shall be continued until the fuel being delivered into the tanks is acceptable to the Contracting Officer. After the system has been flushed to the satisfaction of the Contracting Officer, the Contractor shall remove any water remaining in the low point drains and remove any accumulated water from Operating Tank sumps and bottoms by means of the Water Draw-off systems. Cone strainers shall be kept clean in order to insure maximum flow rate. Upon completion of the first flushing operations, the cone strainers shall be removed from the system. In addition, baskets from all strainers shall be removed and cleaned.

3.2.1.1 Transfer Line

Flushing of the transfer line shall occur during the filling operations. Samples of the incoming fuel shall be taken at the point of connection with bulk storage supply line. These samples shall be taken at one hour intervals and shall be tested by the designated government agency and turned over to the Contracting Officer.

3.2.1.2 Pump House Piping

Remove equipment as specified in paragraph Protection of Equipment. Perform the following flushing operations by withdrawing fuel from one operating tank and returning it to another tank. Circulate a sufficient amount of fuel for each operation. Bleed air from high points.

a. Position manual valves to circulate fuel through one pump, filter separator combination.

b. Provide a temporary connection between the pantograph checkout connection and the single point receptacle. Position manual valves to circulate fuel through the checkout connection and back to the transfer line. Flush the checkout lines using one fueling pump.

c. Position manual valves to circulate fuel through the bypass line. Flush this line using two fueling pumps.

3.2.1.3 Apron Loop Piping

Remove equipment as specified in paragraph Protection of Equipment. Position manual valves to circulate fuel through the apron loop and back to the operating tank. Begin flushing the apron loop at a flow rate of 600 gpm. Increase flushing flow rate one pump at a time to the maximum available number of pumps for a minimum of 8 hours.

3.2.1.4 Hydrant Outlets

Position a tank truck at the hydrant outlet and flush each hydrant lateral. Sample the fuel at the connection to the truck.

3.2.1.5 Product Recovery Tank Lines

During the flushing of apron loop piping, operate all manual drain lines individually to flush their connection to the product recovery tank. Fill the tank a minimum three times, each time utilizing the fuel transfer pump to drain it by returning the fuel to storage.

3.2.1.6 Pantographs

Utilize the pantograph check-out connection and single point receptacle to flush each pantograph. Sample the fuel at the pressure fueling nozzle with the kit provided for this purpose.

3.3 CLEANING

After initial flushing is completed, the pump house and apron loop piping shall be cleaned in accordance with the procedure specified hereafter. Operating Tanks shall be isolated from system and cleaned as specified in Section 15177 PETROLEUM TANK CLEANING. The Product Recovery Tank shall

have an in-line sample taken from the bottom. If the particulate content exceeds 8 mg/gal the tank must be pumped down and visually inspected to determine need for cleaning. If required, clean per Section 15177.

3.3.1 Preparation for Cleaning

Filter elements shall be installed in the filter separators. Adjust filter separator flow control valve. Valves and equipment removed for flushing shall be reinstalled. Cone strainers shall be removed. Operating Tanks shall be drained, vapor freed and cleaned. Transfer the contents from one operating tank to the other for the purposes of cleaning.

3.3.2 Cleaning Requirements

Cleaning shall continue until Contracting Officer certifies that the fuel passes the color and particle assessment method as defined in T.O. 42B-1-1 or contains 2 milligrams per gallon or less of particulate. Fuel shall also contain 10 parts per million or less of free water. Sampling and testing shall be done by the Air Force.Also take fuel samples on Pantograph(s).

3.3.3 Cleaning Procedure

During cleaning procedure periodically bleed air through high point vent and drain water through low point drains.

3.3.3.1 Transfer Line

Continue to receive fuel and circulate it until fuel samples taken at the tanks meet the requirements of paragraph 3.3.2.

3.3.3.2 Pump House Piping

Pump house piping shall be cleaned as follows:

a. Position manual valves so that fuel is withdrawn from one operating tank, circulated through one fueling pump and filter separator, then returned to the operating tank through the receiving filter separators.

b. Clean the piping system using one pump at a time. Alternate the fueling pumps and filter separators during the operation to clean the individual fueling pump suction and discharge lines.

c. Provide a temporary connection between the pantograph connection and the nozzle adaptor. Position valves to circulate fuel through the checkout connection and back to the return line. Clean the checkout lines using two fueling pumps.

d. Connect truck fill station to a tank truck and clean the line.

e. Monitor pressure drop through the filter separators during each cleaning operation and provide flow vs. pressure drop graphs as specified herein before.

f. Periodically take samples from all sample connections. Cleaning shall continue until the fuel meets the specified requirements.

3.3.3.3 Apron Loop Piping

Apron loop piping shall be cleaned as follows:

a. Position manual valves to circulate fuel through the apron loop and back to the operating tank through the receiving filter separators.

b. Initially pump fuel through the apron loop at a flow rate of 600 gpm, then increase flow rate up to the full capacity (all pumps running) starting manually one pump at a time. When pumping at a rate greater than 1200 gpm, by-pass receiving filter separators.

c. Monitor pressure drop through the filter separators during the cleaning operation and provide flow vs. pressure drop graphs as specified herein before.

d. Position a tank truck at the hydrant outlet and clean each hydrant lateral,one at a time.

e. Periodically take samples from all sample connections. Cleaning shall continue until the fuel meets specified requirements of paragraph 3.3.2.

3.3.3.4 Product Recovery Lines

Repeat the process described under initial flushing until samples taken at the connection of the pipe line back to storage meet the requirements.

3.3.3.5 Pantographs

Repeat the process described under initial flushing until samples taken at the pressure fueling nozzle meet the requirements.

3.4 CONTROL VALVE AND PANTOGRAPH ADJUSTMENT

All control valve settings shall be checked and field adjusted from the factory settings at start-up as necessary to provide a smooth operation. The filter separator control valves and fueling pump non-surge check valve and needle valve on Pantograph venturi shall be checked and adjusted as follows:

3.4.1 Rate of Flow Control Feature on Fueling Pump Non-Surge Check Valve

Run one pump at a time and adjust rate of flow feature (650 gpm).

3.4.2 Control Valves on Issue Filter Separator Downstream Side

a. Position valves so that one fueling pump can pump through only one filter separator. Close the valve at the entrance of the apron loop, and open the bypass valve, allowing discharge into the circulating line.

b. Start the pump and adjust the filter separator control valve for the rated flow capacity of the filter separator (600 gpm).

c. Repeat above for each remaining filter separator.

3.4.3 Venturi Needle Valve

Venturi needle valve shall be adjusted to ensure a pressure equal to nozzle

pressure at maximum flow possible. After initial setting, valve shall be locked in adjusted position.

## 3.5 EQUIPMENT TESTS

After completion of flushing, cleaning, and control valve and electrical components adjusting operations, the tests specified hereinafter shall be performed. After cleaning is complete and prior to performance testing, field adjustment of automatic control valves and automatic pump controls while in operation shall be made only by the valve manufacturer's authorized field test engineer. For final adjustment of installed electrical control equipment the Contractor shall provide an experienced electrical engineer, factory representative of PCP manufacturer and factory representative of PIT and DPT manufacturers. Both the mechanical and electrical components shall be adjusted concurrently. Tests will be witnessed by the Contracting Officer, the Command Fuel Facilities Engineer and the Command Fuel Management Officer. Contractor shall complete and submit to Contracting Officer the "CHECK LIST FOR EQUIPMENT TEST" provided hereinafter.

### 3.5.1 Operating Tank Low Level Alarm

Position valves to transfer fuel between operating tanks. Start one fueling pump and pump sufficient fuel out of the first operating tank to allow the low level alarm (LLA) to stop the fueling pump. This procedure shall be repeated for each fueling pump and each tank until the low level alarm stops the fueling pump due to low liquid level in operating tank.

### 3.5.2 Fuel Delivery

Deliver fuel to each fueling point against a backpressure at the outlet of the hydrant control valve created by the tank trucks and hoses used during the tests. The flow rate shall be not less than 600 gallons per minute for a 4-inch valve.The flow rate shall be not less than 1200 gallons per minute for a 6-inch valve. Flow rates might be affected by aircraft capability.

### 3.5.3 Fueling Pump Operation

Operation of all pressure and flow devices to start and stop the fueling pumps at the indicated pressure and flow rates shall be demonstrated by the Contractor in the presence of the Contracting Officer. The operating sequence shall be repeated with each of the pumps being selected as lead pump. For this test, the flow rates shall be measured. Flow rates and test results shall be recorded and witnessed by the Contractor.

### 3.5.4 Defueling Performance

To test the defueling operation in the "automatic" mode, the Government will furnish a defueling cart or a hydrant hose truck with a 300 gpm pump rated at 165 psi to pump fuel from a government furnished tank truck or bladder back into the system. While this defueling test is in operation, one 600 gpm transfer pump shall be operated providing flow into a tank truck through one hydrant control valve. Demonstrate capability of defueling into the system at the same time a fueling operation is in progress. Also test the defuel capability while in the "Flush" mode.

### 3.5.5 Emergency Shutdown

With one fueling pump circulating fuel through the system, test each

"Emergency Stop" pushbutton station to verify that the pump stops and the emergency shutoff valves CV-1 through CV-7 close. Repeat above procedure for each fueling pump and "Emergency Stop" pushbutton station. Conduct tests for both the automatic and manual modes. With all the fueling pumps circulating fuel through the system, push an "Emergency Stop" pushbutton station.

3.5.6 Hydrant Control Valve

Each Hydrant Control Valve shall be operated to demonstrate the following:

a. Surge shut-down capability. (Surge from shut-off of on-board aircraft fill valve can be simulated by closing a fill line valve to the tank truck or bladder, use a three (3) second closure.)

b. Pressure control at setpoint, + 2 psi (Requires use of a pressure gage at the pressure fueling nozzle).

3.5.7 Filter Separator Float Control Valves with Manual Tester

Using the manual float control test level on each Filter Separator, lift the weight from the float ball slowly and observe the following:

Operation and closure of the water slug shut-off feature on the Filter Separator Control Valve.

3.5.8 Overfill Valve

Place fuel transfer pump in the "off" position. Delivery quantity of fuel to Product Recovery Tank to demonstrate capability of valve to close. Place Fuel Transfer Pump in the "Automatic" position to demonstrate capability of valve to open when fuel level drops below set point.

3.6 PERFORMANCE TESTING

Testing as performed under the above paragraphs shall be considered to be part of the performance testing after the Contractor has made the required adjustments to the various equipment and controls and demonstrates to the satisfaction of the Contracting Officer and the Command Fuel Facilities Engineer that these portions of the systems are working as specified. The Contractor shall notify the Contracting Officer 15 calendar days in advance of the test to permit arrangement for the use of Government-furnished items.

3.6.1 Final Performance Test

The final performance test shall consist of performance of the fueling system during actual fueling and defueling of an aircraft. The maximum rated capacity of the system shall be tested by using several aircraft simultaneously. If it is not possible to use the number of aircraft required to receive the full flow, the test shall be supplemented through the use of refueling trucks or bladders. Record required data necessary to prepare "Test Reports" specified in paragraph Test Reports.

3.6.1.1 Satisfactory Performance

In the event a portion of the system or any piece of equipment fails to meet the test, the Contractor shall make the necessary repairs or adjustments and repeat the Performance Test until satisfactory performance is obtained. The determination of satisfactory performance shall be made

by the Contracting Officer and the Command Fuel Facilities Engineer.

3.6.2 Final Acceptance

The system shall be filled with fuel and shall be operable and leak-free prior to acceptance. Anything wet with fuel is considered to be leaking.

3.6.2.1 Operating Tank High Liquid Level Shut-Off Valve Test and Adjustments

During the final filling of operating tanks, the tank automatic high liquid level shut-off valve shall be checked for proper functioning at least three times by lowering the fuel level and refilling again. Adjust valve to achieve a safe fill level.

3.6.2.2 Tank Level Indicator Adjustments

Also during the final filling of operating tanks, adjust and calibrate the tank level indicators including the final setting of the high high level (HHLA) and high level (HLA) alarms. Since the HHLA is at a point higher than the High Liquid Level Shut-Off Valve float set point, an artificial method of simulating HHL must be used.

3.6.2.3 Water Draw-Off System Test

During the performance testing, Water Draw-off Systems shall be filled from Operating Tank sump to ensure proper operation. After filling system, allow time for fuel/water mixture to separate. Verify liquid separation through system's sight glasses. Proper operation includes capability to drain separated water and capability to pump separated fuel back to a full Operating Tank.

-- End of Section --

SECTION TABLE OF CONTENTS

DIVISION 15 - MECHANICAL

SECTION 15950A

HEATING, VENTILATING AND AIR CONDITIONING (HVAC) CONTROL SYSTEMS

**12/01**

PART 1 GENERAL

1.1 REFERENCES
1.2 SUBMITTALS
1.3 GENERAL REQUIREMENTS
1.3.1 Verification of Dimensions
1.3.2 Drawings
1.4 DELIVERY AND STORAGE
1.5 OPERATION MANUAL
1.6 MAINTENANCE AND REPAIR MANUAL

PART 2 PRODUCTS

2.1 MATERIAL AND EQUIPMENT
2.2 GENERAL EQUIPMENT REQUIREMENTS
2.2.1 Electrical and Electronic Devices
2.2.2 Standard Signals
2.2.3 Ambient Temperature Limits
2.2.4 Nameplates, Lens Caps, and Tag Nameplates
2.2.5 Year 2000 Compliance
2.3 MATERIALS
2.3.1 Tubing
2.3.1.1 Copper
2.3.1.2 Plastic
2.3.2 Wiring
2.3.2.1 Terminal Blocks
2.3.2.2 Control Wiring for 24-Volt Circuits
2.3.2.3 Wiring for 120-Volt Circuits
2.3.2.4 Analog Signal Wiring Circuits
2.3.2.5 Instrumentation Cable
2.3.2.6 Transformers
2.4 ACTUATORS
2.5 DAMPERS
2.5.1 Damper Assembly
2.5.1.1 Operating Links
2.5.1.2 Damper Types
2.5.2 Outside-Air, Return-Air, and Relief-Air Dampers
2.5.3 Mechanical and Electrical Space Ventilation Dampers
2.5.4 Damper End Switches
2.6 INSTRUMENTATION
2.6.1 Measurements
2.6.2 Temperature Instruments
2.6.2.1 Resistance Temperature Detectors (RTD)
2.6.2.2 Continuous-Averaging RTD
2.6.2.3 RTD Transmitter
2.7 THERMOSTATS

2.7.1 Nonmodulating Room Thermostats
2.7.2 Microprocessor-Based Room Thermostats
2.7.3 Low-Temperature-Protection Thermostats

PART 3 EXECUTION

3.1 GENERAL INSTALLATION CRITERIA
3.1.1 Device Mounting Criteria
3.1.2 Wiring Criteria
3.1.2.1 Power-Line Surge Protection
3.1.2.2 Surge Protection for Transmitter and Control Wiring
3.1.2.3 Controller Output Loop Impedance Limitation
3.2 CONTROL SYSTEM INSTALLATION
3.2.1 Damper Actuators
3.2.2 Room-Instrument Mounting
3.2.3 Manual Emergency Fan Shutdown Switches
3.2.4 Low-Temperature-Protection Thermostats
3.2.5 Averaging-Temperature Sensing Elements
3.3 CONTROL SEQUENCES OF OPERATION
3.3.1 System Requirements
3.3.2 All-Air Small Package Unitary System
3.3.3 Exhaust Fan
3.4 COMMISSIONING PROCEDURES
3.4.1 General Procedures
3.4.1.1 Evaluations
3.4.1.2 Item Check
3.4.1.3 Weather-Dependent Test Procedures
3.4.1.4 Insertion, Immersion Temperature
3.4.1.5 Averaging Temperature
3.4.1.6 Controller Stations
3.4.1.7 Controller-Tuning Procedure
3.4.1.8 Controller Manual-Tuning Procedure
3.4.1.9 Setting the Controller
3.4.2 All-Air Small Packaged Unitary
3.5 BALANCING, COMMISSIONING, AND TESTING
3.5.1 Coordination with HVAC System Balancing
3.5.2 Control System Calibration, Adjustments, and Commissioning
3.5.3 Performance Verification Test
3.5.4 Posted Instructions
3.6 TRAINING
3.6.1 Training-Course Requirements
3.6.2 Training-Course Content

-- End of Section Table of Contents --

SECTION 15950A

HEATING, VENTILATING AND AIR CONDITIONING (HVAC) CONTROL SYSTEMS
**12/01**

PART 1 GENERAL

1.1 REFERENCES

The publications listed below form a part of this specification to the extent referenced. The publications are referred to in the text by basic designation only.

AIR MOVEMENT AND CONTROL ASSOCIATION (AMCA)

| | |
|---|---|
| AMCA 500-D | (1997) Laboratory Methods of Testing Dampers for Rating |

AMERICAN SOCIETY FOR TESTING AND MATERIALS (ASTM)

| | |
|---|---|
| ASTM B 88 | (2002) Seamless Copper Water Tube |
| ASTM D 1693 | (2000) Environmental Stress-Cracking of Ethylene Plastics |
| ASTM D 635 | (1998) Rate of Burning and/or Extent and Time of Burning of Self-Supporting Plastics in a Horizontal Position |

INSTITUTE OF ELECTRICAL AND ELECTRONICS ENGINEERS (IEEE)

| | |
|---|---|
| IEEE C62.41 | (1991; R 1995) Surge Voltages in Low-Voltage AC Power Circuits |

NATIONAL ELECTRICAL MANUFACTURERS ASSOCIATION (NEMA)

| | |
|---|---|
| NEMA 250 | (1997) Enclosures for Electrical Equipment (1000 Volts Maximum) |

NATIONAL FIRE PROTECTION ASSOCIATION (NFPA)

| | |
|---|---|
| NFPA 70 | (2002) National Electrical Code |
| NFPA 90A | (1999) Installation of Air Conditioning and Ventilating Systems |

UNDERWRITERS LABORATORIES (UL)

| | |
|---|---|
| UL 508 | (1999) Industrial Control Equipment |
| UL 94 | (1996; Rev thru Jul 1998) Tests for Flammability of Plastic Materials for Parts in Devices and Appliances |

1.2 SUBMITTALS

Government approval is required for submittals with a "G" designation; submittals not having a "G" designation are for information only. When used, a designation following the "G" designation identifies the office that will review the submittal for the Government. The following shall be submitted in accordance with Section 01330 SUBMITTAL PROCEDURES:

SD-02 Shop Drawings

Drawings; G-AO

Drawings on A1 34 by 22 inch sheets in the form and arrangement shown. The drawings shall use the same abbreviations, symbols, nomenclature and device identifiers shown. Each control-system element on a drawing shall have a unique identifier as shown. All HVAC control system drawings shall be delivered together as a complete submittal. Drawings shall be submitted for each HVAC system.

a. HVAC control system drawings shall include the following:

Sheet One: Drawing index, HVAC control system legend.

Sheet Two: Damper schedule.

Sheet Four: HVAC control system schematic and equipment schedule.

Sheet Five: HVAC control system sequence of operation and ladder diagram.

Sheet Eight: Control loop wiring diagrams.

Sheet Nine: Motor starter and relay wiring diagram.

b. An HVAC control system drawing index showing the name and number of the building, military site, State or other similar designation, and Country. The drawing index shall list all HVAC control system drawings, including the drawing number, sheet number, drawing title, and computer filename when used.

c. An HVAC control system legend showing generic symbols and the name of devices shown on the HVAC control system drawings.

d. A damper schedule showing each damper and actuator's identifier, nominal and actual sizes, orientation of axis and frame, direction of blade rotation, spring ranges, operation rate, positive positioner ranges, locations of actuators and damper end switches, arrangement of sections in multi-section dampers, and methods of connecting dampers, actuators, and linkages. The damper schedule shall include the maximum leakage rate at the operating static-pressure differential. The damper schedule shall contain actuator selection data supported by calculations of the torque required to move and seal the dampers, access and clearance requirements.

e. An HVAC control system equipment schedule showing the control loop, device unique identifier, device function, setpoint,

input range, and additional important parameters (i.e. output range).

f. An HVAC control system sequence of operation.

g. An HVAC control system ladder diagram showing all relays, contacts, pilot lights, switches, fuses and starters connected to the control system.

h. HVAC control system wiring diagrams showing functional wiring diagrams of the interconnection of conductors and cables to HVAC control panel terminal blocks and to the identified terminals of devices, starters and package equipment. The wiring diagrams shall show all necessary jumpers and ground connections. The wiring diagrams shall show the labels of all conductors. Sources of power required for HVAC control systems and for packaged-equipment control systems shall be identified back to the panel-board circuit breaker number, HVAC system control panel, magnetic starter, or packaged equipment control circuit. Each power supply and transformer not integral to a controller, starter, or packaged equipment shall be shown. The connected volt-ampere load and the power supply volt-ampere rating shall be shown.

SD-03 Product Data

HVAC Control System; G-AO
Service Organizations; G-AO

Six copies of a list of service organizations qualified to service the HVAC control system. The list shall include the service organization name, address, technical point of contact and telephone number, and contractual point of contact and telephone number.

Equipment Compliance Booklet;

An HVAC control system equipment compliance booklet (ECB) in indexed booklet form with numbered tabs separating the information on each device. It shall consist of, but not be limited to, data sheets and catalog cuts which document compliance of all devices and components with the specifications. The ECB shall be indexed in alphabetical order by the unique identifiers. Devices and components which do not have unique identifiers shall follow the devices and components with unique identifiers and shall be indexed in alphabetical order according to their functional name. The ECB shall include a bill of materials for each HVAC control system. The bill of materials shall function as the table of contents for the ECB and shall include the device's unique identifier, device function, manufacturer, model/part/catalog number used for ordering, and tab number where the device information is located in the ECB.

Commissioning Procedures; G-AO

a. Six copies of the HVAC control system commissioning procedures, in indexed booklet form, 60 days prior to the scheduled start of commissioning. Commissioning procedures shall be provided for each HVAC control system, and for each type of

terminal-unit control system. The commissioning procedures shall reflect the format and language of this specification, and refer to devices by their unique identifiers as shown. The commissioning procedures shall be specific for each HVAC system, and shall give detailed step-by-step procedures for commissioning of the system.

b. Commissioning procedures documenting detailed, product-specific set-up procedures, configuration procedures, adjustment procedures, and calibration procedures for each device. Where the detailed product-specific commissioning procedures are included in manufacturer supplied manuals, reference may be made in the HVAC control system commissioning procedures to the manuals.

c. Commissioning procedures documenting controller configuration checksheets for each controller listing all configuration parameters, dip switch and jumper settings, and initial recommended P, I and D values. The configuration parameters shall be listed in the order in which they appear during the configuration process. Each configuration parameter shall be noted as being: set per specs with no field adjustment required, set per specs but field adjustable, or not applicable.

d. An HVAC control system commissioning procedures equipment list that lists the equipment to be used to accomplish commissioning. The list shall include manufacturer name, model number, equipment function, the date of the latest calibration, and the results of the latest calibration.

Performance Verification Test Procedures; G-AO

Six copies of the HVAC control system performance verification test procedures, in indexed booklet form, 60 days before the Contractor's scheduled test dates. The performance verification test procedures shall refer to the devices by their unique identifiers as shown, shall explain, step-by-step, the actions and expected results that will demonstrate that the HVAC control system performs in accordance with the sequences of operation. An HVAC control system performance verification test equipment list shall be included that lists the equipment to be used during performance verification testing. The list shall include manufacturer name, model number, equipment function, the date of the latest calibration, and the results of the latest calibration.

Training Course Requirements; G-AO

Six copies of HVAC control system training course material 30 days prior to the scheduled start of the training course. The training course material shall include the operation manual, maintenance and repair manual, and paper copies of overheads used in the course. An HVAC control system training course, in outline form, with a proposed time schedule. Approval of the planned training schedule shall be obtained from the Government at least 60 days prior to the start of the training.

SD-06 Test Reports

Commissioning Report; G-AO

Six copies of the HVAC control system commissioning report, in indexed booklet form, within 30 days after completion of the system commissioning. The commissioning report shall include data collected during the HVAC control system commissioning and shall follow the format of the commissioning procedures. The commissioning report shall include all controller and time clock checksheets with final values listed for all parameters, setpoints, P, I, D setting constants, calibration data for all devices, and results of adjustments.

Performance Verification Test; G-AO

Six copies of the HVAC control system performance verification test report, in indexed booklet form, within 30 days after completion of the test. The HVAC control system performance verification test report shall include data collected during the HVAC control system performance verification test. The original copies of data gathered during the performance verification test shall be turned over to the Government after Government approval of the test results.

SD-10 Operation and Maintenance Data

Operation Manual; G--AO
Maintenance and Repair Manual; G-AO

Six copies of the HVAC control system operation manual and HVAC control system maintenance and repair manual for each HVAC control system 30 days before the date scheduled for the training course.

## 1.3 GENERAL REQUIREMENTS

### 1.3.1 Verification of Dimensions

The Contractor shall become familiar with all details of the work, shall verify all dimensions in the field, and shall advise the Contracting Officer of any discrepancy before performing any work.

### 1.3.2 Drawings

Because of the small scale of the drawings, it is not possible to indicate all offsets, fittings, and accessories that may be required. The Contractor shall investigate the mechanical, electrical, and finish conditions that could affect the work to be performed, shall arrange such work accordingly, and shall furnish all work necessary to meet such conditions.

## 1.4 DELIVERY AND STORAGE

Products shall be stored with protection from the weather, humidity and temperature variations, dirt and dust, and other contaminants, within the storage-condition limits published by the equipment manufacturer. Dampers shall be stored so that seal integrity, blade alignment and frame alignment are maintained.

## 1.5 OPERATION MANUAL

An HVAC control system operation manual for each HVAC control system, in indexed booklet form, shall be provided. The operation manual shall

include the HVAC control system sequence of operation, and procedures for the HVAC system start-up, operation and shut-down. The operation manual shall include as-built HVAC control system detail drawings. The operation manual shall include the as-built controller configuration checksheets, the procedures for changing HVAC system controller setpoints, the procedures for gaining manual control of processes, the time clock manufacturer's manual control of processes, the time clock manufacturer's operation manual, and the controller manufacturer's operation manual.

a. The procedures for changing HVAC system controller setpoints shall describe the step-by-step procedures required to change: the process variable setpoints of controllers, the alarm setpoints of controllers, the controller bias settings, and controller setpoint reset schedules.

b. The procedures for gaining manual control of processes shall describe step-by-step procedures required to gain manual control of devices and manually adjust their positions.

## 1.6 MAINTENANCE AND REPAIR MANUAL

An HVAC control system maintenance and repair manual for each HVAC control system, in indexed booklet form in hardback binders, shall be provided. The maintenance and repair manual shall include the routine maintenance checklist, a recommended repair methods list, a list of recommended maintenance and repair tools, the qualified service organization list, the as-built commissioning procedures and report, the as-built performance verification test procedures and report, and the as-built equipment data booklet (EDB).

a. The routine maintenance checklist shall be arranged in a columnar format. The first column shall list all devices listed in the equipment compliance booklet (ECB), the second column shall state the maintenance activity or state no maintenance required, the third column shall state the frequency of the maintenance activity, and the fourth column for additional comments or reference.

b. The recommended repair methods list shall be arranged in a columnar format and shall list all devices in the equipment compliance booklet (ECB) and state the guidance on recommended repair methods, either field repair, factory repair, or whole-item replacement.

c. The as-built equipment data booklet (EDB) shall include the equipment compliance booklet (ECB) and all manufacturer supplied user manuals and information.

d. If the operation manual and the maintenance and repair manual are provided in a common volume, they shall be clearly differentiated and separately indexed.

# PART 2 PRODUCTS

## 2.1 MATERIAL AND EQUIPMENT

Material and equipment shall be standard products of a manufacturer regularly engaged in the manufacturing of such products which are of a similar material, design and workmanship. The standard products shall have

been in satisfactory commercial or industrial use for 2 years prior to bid opening. The 2-year use shall include applications of equipment and materials under similar circumstances and of similar size. The 2 years experience must be satisfactorily completed by a product which has been sold or is offered for sale on the commercial market through advertisements, manufacturers' catalogs, or brochures. Products having less than a 2-year field service record will be acceptable if a certified record of satisfactory field operation, for not less than 6000 hours exclusive of the manufacturer's factory tests, can be shown. The equipment items shall be supported by a service organization. The Contractor shall submit a certified list of qualified permanent service organizations and qualifications. These service organizations shall be reasonably convenient to the equipment on a regular and emergency basis during the warranty period.

## 2.2 GENERAL EQUIPMENT REQUIREMENTS

### 2.2.1 Electrical and Electronic Devices

All electrical, electronic, and electro-pneumatic devices not located within an HVAC control panel shall have a NEMA Type 1 enclosure in accordance with NEMA 250 unless otherwise shown.

### 2.2.2 Standard Signals

The output of all analog transmitters and the analog input and output of all single-loop controllers and function modules shall be 4-to-20 mAdc signals. The signal shall originate from current-sourcing devices and shall be received by current-sinking devices.

### 2.2.3 Ambient Temperature Limits

Ambient Temperature Actuators and positive positioners, and transmitters shall operate within temperature limit ratings of 40 to 140 degrees F. All panel-mounted instruments shall operate within limit ratings of 35 to 120 degrees F and 10 percent to 95 percent relative humidity, noncondensing. All devices installed outdoors shall operate within limit ratings of minus 40 to plus 150 degrees F.

### 2.2.4 Nameplates, Lens Caps, and Tag Nameplates

Nameplates, lens caps, and lens caps bearing legends as shown and tags bearing device-unique identifiers as shown shall have engraved or stamped characters. A plastic or metal tag shall be mechanically attached directly to each device or attached by a metal chain or wire.

### 2.2.5 Year 2000 Compliance

All equipment shall be Year 2000 compliant and shall be able to accurately process date/time data (including, but not limited to, calculating, comparing, and sequencing) from, into, and between the twentieth and twenty-first centuries, including leap year calculations, when used in accordance with the product documentation provided by the contractor, provided that all products (e.g. hardware, software, firmware) used in combination with other information technology, shall accurately process date/time data if other information technology properly exchanges date/time data with it.

## 2.3 MATERIALS

### 2.3.1 Tubing

#### 2.3.1.1 Copper

Copper tubing shall conform to ASTM B 88 and shall have sweat fittings and valves.

#### 2.3.1.2 Plastic

Plastic tubing shall have barbed fittings and valves. Plastic tubing shall have the burning characteristics of linear low-density polyethylene tubing, shall be self-extinguishing when tested in accordance with ASTM D 635, shall have UL 94 V-2 flammability classification, and shall withstand stress cracking when tested in accordance with ASTM D 1693. Plastic-tubing bundles shall be provided with Mylar barrier and flame-retardant polyethylene jacket.

### 2.3.2 Wiring

#### 2.3.2.1 Terminal Blocks

Terminal blocks shall be insulated, modular, feed-through, clamp style with recessed captive screw-type clamping mechanism, shall be suitable for rail mounting, and shall have end plates and partition plates for separation or shall have enclosed sides.

#### 2.3.2.2 Control Wiring for 24-Volt Circuits

Control wiring for 24-volt circuits shall be 18 AWG minimum, stranded copper and shall be rated for 300-volt service.

#### 2.3.2.3 Wiring for 120-Volt Circuits

Wiring for 120-volt circuits shall be 18 AWG minimum, stranded copper and shall be rated for 600-volt service.

#### 2.3.2.4 Analog Signal Wiring Circuits

Analog signal wiring circuits within control panels shall not be less than 20 AWG and shall be rated for 300-volt service.

#### 2.3.2.5 Instrumentation Cable

Instrumentation cable shall be 18 AWG, stranded copper, single or multiple-twisted, minimum 2 inch lay of twist, 100 percent shielded pairs, and shall have a 300-volt insulation. Each pair shall have a 20 AWG tinned-copper drain wire and individual overall pair insulation. Cables shall have an overall aluminum-polyester or tinned-copper cable-shield tape, overall 20 AWG tinned-copper cable drain wire, and overall cable insulation.

#### 2.3.2.6 Transformers

Step-down transformers shall be utilized where control equipment operates at lower than line circuit voltage. Transformers, other than transformers in bridge circuits, shall have primaries wound for the voltage available and secondaries wound for the correct control circuit voltage.

Transformers shall be sized so that the connected load is 80 percent of the rated capacity or less. Transformers shall conform to UL 508.

## 2.4 ACTUATORS

Actuators shall be electric or electronic as shown and shall be provided with mounting and connecting hardware. Actuators shall fail to their spring-return positions on signal or power failure . The actuator stroke shall be limited in the direction of power stroke by an adjustable stop. Actuators shall have a visible position indicator. Actuators shall smoothly open or close the devices to which they are applied and shall have a full stroke response time of 90 seconds or less. Electric actuators shall have an oil-immersed gear train. Electric or electronic actuators operating in series shall have an auxiliary actuator driver. Electric or electronic actuators used in sequencing applications shall have an adjustable operating range and start point.

## 2.5 DAMPERS

### 2.5.1 Damper Assembly

A single damper section shall have blades no longer than 48 inches and shall be no higher than 72 inches. Maximum damper blade width shall be 8 inches. Larger sizes shall be made from a combination of sections. Dampers shall be steel, or other materials where shown. Flat blades shall be made rigid by folding the edges. All blade-operating linkages shall be within the frame so that blade-connecting devices within the same damper section will not be located directly in the air stream. Damper axles shall be 0.5 inch (minimum) plated steel rods supported in the damper frame by stainless steel or bronze bearings. Blades mounted vertically shall be supported by thrust bearings. Pressure drop through dampers shall not exceed 0.04 inch water gauge at 1,000 fpm in the wide-open position. Frames shall not be less than 2 inches in width. Dampers shall be tested in accordance with AMCA 500-D.

#### 2.5.1.1 Operating Links

Operating links external to dampers (such as crankarms, connecting rods, and line shafting for transmitting motion from damper actuators to dampers) shall withstand a load equal to at least twice the maximum required damper-operating force. Rod lengths shall be adjustable. Links shall be brass, bronze, zinc-coated steel, or stainless steel. Working parts of joints and clevises shall be brass, bronze, or stainless steel. Adjustments of crankarms shall control the open and closed positions of dampers.

#### 2.5.1.2 Damper Types

Dampers shall be parallel blade type.

### 2.5.2 Outside-Air, Return-Air, and Relief-Air Dampers

The dampers shall be provided where shown. Blades shall have interlocking edges and shall be provided with compressible seals at points of contact. The channel frames of the dampers shall be provided with jamb seals to minimize air leakage. Dampers shall not leak in excess of 20 cfm per square foot at 4 inches water gaugestatic pressure when closed. Seals shall be suitable for an operating temperature range of minus 40 to plus 200 degrees F. Dampers shall be rated at not less than 2000 fpm air

velocity.

2.5.3 Mechanical and Electrical Space Ventilation Dampers

The dampers shall be as shown. Dampers shall not leak in excess of 80 cfm per square foot at 4 inches water (gauge) static pressure when closed. Dampers shall be rated at not less than 1500 fpm air velocity.

2.5.4 Damper End Switches

Each end switch shall be a hermetically-sealed switch with a trip lever and over-travel mechanism. The switch enclosure shall be suitable for mounting on the duct exterior and shall permit setting the position of the trip lever that actuates the switch. The trip lever shall be aligned with the damper blade.

2.6 INSTRUMENTATION

2.6.1 Measurements

Transmitters shall be factory calibrated to provide an output of 4 to 20 mAdc over the indicated ranges:

a. Conditioned space temperature, from 50 to 85 degrees F.

2.6.2 Temperature Instruments

2.6.2.1 Resistance Temperature Detectors (RTD)

Temperature sensors shall be 100 ohms 3- or 4-wire RTD. Each RTD shall be platinum with a tolerance of plus or minus 0.54 degrees F at 32 degrees F with a temperature coefficient of resistance (TCR) of 0.00214ohmn/ohm/degF. Each RTD shall be furnished with an RTD transmitter as specified, integrally-mounted unless otherwise shown.

2.6.2.2 Continuous-Averaging RTD

Continuous-averaging RTDs shall have a tolerance of plus or minus 1.0 degree F at the reference temperature, and shall be of sufficient length to ensure that the resistance represents an average over the cross-section in which it is installed. The sensing element shall have a bendable copper sheath. Each averaging RTD shall be furnished with an RTD transmitter as specified, to match the resistance range of the averaging RTD.

2.6.2.3 RTD Transmitter

The RTD transmitter shall accept a 3-wire 100 ohm RTD input. The transmitter shall be a 2-wire, loop-powered device. The transmitter shall produce a linear 4-to-20 mAdc output corresponding to the required temperature measurement. The output error shall not exceed 0.1 percent of the calibrated span. The transmitter shall include offset and span adjustments.

2.7 THERMOSTATS

Thermostat ranges shall be selected so that the setpoint is adjustable without tools between plus or minus 10 degrees F of the setpoint shown. Thermostats shall be electronic or electric.

2.7.1 Nonmodulating Room Thermostats

2.7.2 Microprocessor-Based Room Thermostats

Microprocessor-based thermostats shall have built-in keypads for scheduling of day and night temperature settings. When out of the scheduling mode, thermostats shall have continuous display of time, with AM and PM indicator, continuous display of day of week, and either continuous display of room temperature with display of temperature setpoint on demand, or continuous display of temperature setpoint with display of room temperature on demand. In the programmable mode, the display shall be used for interrogating time program ON-OFF setpoints for all 7 days of the week. The time program shall allow 2 separate temperature-setback intervals per day. The thermostats shall have a means for temporary and manual override of the program schedule, with automatic program restoration on the following day. Thermostats shall have a replaceable battery to maintain the timing and maintain the schedule in memory for 1 year in the event of a power outage. Maximum differential shall be 2 degrees F. When used for heat-pump applications, the thermostat shall have an emergency heat switch.

2.7.3 Low-Temperature-Protection Thermostats

Low-temperature-protection thermostats shall be, low-temperature safety thermostats, with NO and NC contacts and manual reset, with an element length of 20 feet, which shall respond to the coldest 18 inch segment.

PART 3 EXECUTION

3.1 GENERAL INSTALLATION CRITERIA

The HVAC control system shall be installed and ready for operation, as specified and shown. Dielectric isolation shall be provided where dissimilar metals are used for connection and support. Penetrations through and mounting holes in the building exterior shall be made watertight. The HVAC control system installation shall provide clearance for control system maintenance by maintaining access space between coils, access space to mixed-air plenums, and other access space required to calibrate, remove, repair, or replace control system devices. The control system installation shall not interfere with the clearance requirements for mechanical installation shall not interfere with the clearance requirements for mechanical and electrical system maintenance.

3.1.1 Device Mounting Criteria

Devices mounted in or on piping or ductwork, on building surfaces, in mechanical/electrical spaces, or in occupied space ceilings shall be installed in accordance with manufacturer's recommendations and as shown. Control devices to be installed in piping and ductwork shall be provided with all required gaskets, flanges, thermal compounds, insulation, piping, fittings, and manual valves for shutoff, equalization, purging, and calibration. Strap-on temperature sensing elements shall not be used except as specified.

3.1.2 Wiring Criteria

Wiring external to control panels, including low-voltage wiring, shall be installed in metallic raceways. Nonmetallic-sheathed cables or metallic-armored cables may be installed in areas permitted by NFPA 70. Cables and conductors shall be tagged at both ends, with the identifier

shown on the shop drawings, in accordance with the requirements of Section 16415A ELECTRICAL WORK, INTERIOR. Other electrical work shall be as specified in Section 16415A ELECTRICAL WORK, INTERIOR and as shown.

3.1.2.1 Power-Line Surge Protection

Equipment connected to ac circuits shall be protected from powerline surges. Equipment protection shall meet the requirements of IEEE C62.41. Fuses shall not be used for surge protection.

3.1.2.2 Surge Protection for Transmitter and Control Wiring

HVAC system control equipment shall be protected against surges induced on control and transmitter wiring installed outside and as shown. The equipment protection shall be tested in the normal mode and in the common mode, using the following two waveforms:

a. A 10-microsecond by 1000-microsecond waveform with a peak voltage of 1500 volts and a peak current of 60 amperes.

b. An 8-microsecond by 20-microsecond waveform with a peak voltage of 1000 volts and a peak current of 500 amperes.

3.1.2.3 Controller Output Loop Impedance Limitation

Controller output loops shall be constructed so that total circuit impedance connected to the analog output of a single-loop controller shall not exceed 600 ohms.

3.2 CONTROL SYSTEM INSTALLATION

3.2.1 Damper Actuators

Actuators shall not be mounted in the air stream. Multiple actuators operating a common damper shall be connected to a common drive shaft. Actuators shall be installed so that their action shall seal the damper to the extent required to maintain leakage at or below the specified rate and shall move the blades smoothly.

3.2.2 Room-Instrument Mounting

Room instruments, such as wall mounted thermostats, shall be mounted 5 feet above the floor unless otherwise noted. Temperature setpoint device shall be recess mounted.

3.2.3 Manual Emergency Fan Shutdown Switches

Manual emergency fan shutdown switches shall be provided for air distribution fans in accordance with NFPA 90A. Switches shall be the manual-reset type. Switches shall be located and mounted in an accessible manner, approximately 48 inches above the finished floor. Switches shall be properly identified in etched rigid plastic placards.

3.2.4 Low-Temperature-Protection Thermostats

For each 20 square feet of coil-face area, or fraction thereof, a thermostat shall be provided to sense the temperature at the location shown. The thermostat sensing element shall be installed in a serpentine pattern.

3.2.5 Averaging-Temperature Sensing Elements

Sensing elements shall have a total-element minimum length equal to one linear foot per square foot of duct cross-sectional area.

3.3 CONTROL SEQUENCES OF OPERATION

3.3.1 System Requirements

These requirements shall apply to all primary HVAC systems unless modified herein. The sequences describe the actions of the control system for one direction of change in the HVAC process analog variable, such as temperature, humidity or pressure. The reverse sequence shall occur when the direction of change is reversed.

3.3.2 All-Air Small Package Unitary System

A microprocessor-based room thermostat, located as shown, with "HEAT-OFF-COOL" and "AUTO-ON" switches shall control the system. When the switch is in the "HEATING" position, the cooling unit shall be off, and heating shall be active. The thermostat shall operate the condensing unit and system fan to maintain the day and night setpoints as shown. Programmed occupied times shall be considered "day" and programmed unoccupied times shall be considered "night." When the switch is in the "COOLING" position, the heating unit shall be off. The thermostat shall operate the heat pump units and system fan to maintain the setpoint as shown during the day. The heat pump unit shall be off at night. When the switch is in the "OFF" position, the system shall be off. When the "AUTO-ON" switch is in the "ON" position, the system fan shall run continuously. In the "AUTO" position, the system fan shall operate whenever heating or cooling is required. Outdoor air damper shall open when unitary system supply fan is operating and closed when it is not.

3.3.3 Exhaust Fan

Bathroom exhaust fan shall operate simultaneously with unitary system supply fan. Motorized relief damper on ductwork shall open when exhaust fan is running and closed when it is not.

3.4 COMMISSIONING PROCEDURES

3.4.1 General Procedures

3.4.1.1 Evaluations

The Contractor shall make the observations, adjustments, calibrations, measurements, and tests of the control systems, tune the controllers, set the time clock schedule, and make any necessary control-system corrections to ensure that the systems function as described in paragraph CONTROL SEQUENCES OF OPERATION. The Contractor shall permanently record, on system equipment schedule, the final setting of controller proportional, integral and derivative constant settings, setpoint, manual reset setting, maximum and minimum controller output, and ratio and bias settings, in units and terminology specific to the controller.

3.4.1.2 Item Check

An item-by-item check of the sequence of operation requirement shall be

performed using Steps 1 through 4 in the specified control system commissioning procedures. Steps 1, 2, and 3 shall be performed with the HVAC system shutdown; Step 4 shall be performed after the HVAC systems have been started. Signals used to change the mode of operation shall originate from the actual HVAC control device intended for the purpose, such as the time clock. External input signals to the HVAC control panel (such as EMCS, starter auxiliary contacts, and external systems) may be simulated in Steps 1, 2, and 3. With each operational-mode change signal, pilot lights and HVAC-panel output-relay contacts shall be observed to ensure that they function. All terminals assigned to EMCS shall be checked and observed to ensure that the proper signals are available.

3.4.1.3 Weather-Dependent Test Procedures

Weather-dependent test procedures that cannot be performed by simulation shall be performed in the appropriate climatic season. When simulation is used, the Contractor shall verify the actual results in the appropriate season.

3.4.1.4 Insertion, Immersion Temperature

Insertion-temperature and immersion-temperature sensing element and transmitter-to-controller readout calibration accuracy shall be checked at one physical location along the axis of the sensing element.

3.4.1.5 Averaging Temperature

Averaging-temperature sensing element and transmitter-to-controller readout calibration accuracy shall be checked every 2 feet along the axis of the sensing element in the proximity of the sensing element, for a maximum of 10 readings. These readings shall then be averaged.

3.4.1.6 Controller Stations

The Contractor shall use the controllers' MANUAL/AUTOMATIC stations as the means of manipulating control devices, such as dampers and valves, to check IP operation and to effect stable conditions prior to making measurement checks.

3.4.1.7 Controller-Tuning Procedure

The Contractor shall perform a controller-tuning procedure, which shall consist of setting the initial proportional, integral, and derivative (PID) mode constants, controller setpoints, and logging the settings. Tuning shall be self-tuning operation by the controller unless manual tuning is necessary.

3.4.1.8 Controller Manual-Tuning Procedure

Where required, the controller manual-tuning procedure shall be performed in three steps. Using a constant-temperature-setpoint controller as an example, these steps are:

a. Step A:

(1) The controller MANUAL/AUTO station shall be indexed to the AUTO position and the integral- and derivative-mode constants set to zero.

(2) The proportional-mode constant shall be set to an initial setting of 8 percent. (This corresponds to 1.5 psig per degree F or 2.0 ma per degree Fproportional controller output change for a 100 degree F transmitter span.) This causes the controller output signal to vary from live zero output to full output for an input signal change representing an 8 degree F change.

(3) Controllers for other variables, such as relative humidity and static pressure, shall have their proportional-mode constants set initially in a similar manner for an achievable output range proportional to the transmitter span.

b. Step B:

(1) The controller temperature setpoint shall be set at any achievable temperature. The controller output and transmitter input shall be observed.

(2) If the transmitter input continuously oscillates above and below the setpoint without settling at a fixed value, or if such oscillation increases, the proportional-mode constant is too small.

(3) If the proportional-mode constant is too small, increase it in steps until the transmitter input indicates stable control at any temperature, provided that the controller output is not at either extreme of the output range.

(4) If the temperature control point slowly drifts toward or away from the controller setpoint, the proportional-mode constant is too large. Its setting shall be decreased in steps until oscillations occur as described in the preceding paragraphs, and then the setting shall be increased until stable control occurs.

(5) A step change in controller setpoint shall be introduced. This should cause the controller to overshoot the setpoint slightly, with each subsequent overshoot peak value decreasing by a factor of 2/3 until stable control is achieved at, above, or below the setpoint.

(6) Next, the integral-mode constant setting shall be increased in small steps, and setpoint changes shall be introduced until control point and controller setpoint coincide at stable control. This should happen consistently after a setpoint change within a short time, such as 5 to 10 minutes.

c. Step C:

(1) Unless the HVAC process variable changes rapidly, the derivative-mode constant setting can remain at zero.

(2) If derivative control is needed, the derivative-mode constant shall be gradually increased.

(3) Step changes in controller setpoint shall be introduced, and the derivative-mode constant setting adjusted until stable control is achieved.

3.4.1.9 Setting the Controller

After the controller manual-tuning procedure is complete, the controller shall be set at the setpoint as shown.

3.4.2 All-Air Small Packaged Unitary

The schedules shall be manually entered for day-temperature and night-temperature setpoints as shown. The fan "AUTO/ON" switch shall be set to "ON". The time shall be manually entered as "DAY". The heating-cooling switch shall be raised to "HEATING" and cooling shall be off. The temperature setpoint shall be raised and heating shall start. The heating/cooling switch shall be set to "COOLING" and heat shall be off. The temperature setpoint shall be lowered and cooling shall start. The fan "AUTO/ON" switch shall be set to "AUTO" and the foregoing procedure repeated. The fan shall start and stop automatically with the starting and stopping of heating and cooling. The time shall be manually entered as "NIGHT". The foregoing procedures shall be repeated. When the system is verified as operational, the correct "DAY" and "NIGHT" temperature settings shall be restored and the correct time restored. The power to the thermostat shall be shut off and it shall be verified that the thermostat clock keeps time. The results of testing of one of each type of unit shall be logged.

3.5 BALANCING, COMMISSIONING, AND TESTING

3.5.1 Coordination with HVAC System Balancing

Commissioning of the control system, except for tuning of controllers, shall be performed prior to or simultaneous with HVAC system balancing. The Contractor shall tune the HVAC control system after all air-system and hydronic-system balancing has been completed, minimum damper positions set and a report has been issued.

3.5.2 Control System Calibration, Adjustments, and Commissioning

Control system commissioning shall be performed for each HVAC system, using test plans and procedures previously approved by the Government. The Contractor shall provide all personnel, equipment, instrumentation, and supplies necessary to perform commissioning and testing of the HVAC control system. All instrumentation and controls shall be calibrated and the specified accuracy shall be verified using test equipment with calibration traceable to NIST standards. Wiring shall be tested for continuity and for ground, open, and short circuits. Tubing systems shall be tested for leaks. Mechanical control devices shall be adjusted to operate as specified. Written notification of any planned commissioning or testing of the HVAC Control systems shall be given to the Government at least 14 calendar days in advance.

3.5.3 Performance Verification Test

The Contractor shall demonstrate compliance of the HVAC control system with the contract documents. Using test plans and procedures previously approved by the Government, the Contractor shall demonstrate all physical and functional requirements of the project. The performance verification test shall show, step-by-step, the actions and results demonstrating that the control systems perform in accordance with the sequences of operation. The performance verification test shall not be started until after receipt by the Contractor of written permission by the Government, based on

Government approval of the commissioning report and completion of balancing. The tests shall not be conducted during scheduled seasonal off-periods of base heating and cooling systems.

### 3.5.4 Posted Instructions

Posted instructions, showing the final installed conditions, shall be provided for each system. The posted instructions shall consist of half-size laminated drawings and shall include the control system schematic, equipment schedule, ladder diagram, sequence of operation, panel arrangement drawings, wiring diagram, and valve and damper schedules. The posted instructions shall be permanently affixed, by mechanical means, to a wall near the thermostat.

## 3.6 TRAINING

### 3.6.1 Training-Course Requirements

A training course shall be conducted for operating staff members designated by the Contracting Officer. The training period, for a total of 4 hours of normal working time, shall be conducted within 30 days after successful completion of the performance verification test. The training course shall be conducted at the project site. Audiovisual equipment and 4 sets of all other training materials and supplies shall be provided. A training day is defined as 8 hours of classroom instruction, including two 15-minute breaks and excluding lunchtime, Monday through Friday, during the daytime shift in effect at the training facility.

### 3.6.2 Training-Course Content

For guidance in planning the required instruction, the Contractor shall assume that attendees will have a high school education or equivalent, and are familiar with HVAC systems. The training course shall cover all of the material contained in the operating and maintenance instructions, the layout and location of each HVAC control panel, the layout of one of each type of unitary equipment and the locations of each, the location of each system-control device external to the panels, the location of the compressed-air station, preventive maintenance, troubleshooting, diagnostics, calibration, adjustment, commissioning, tuning, and repair procedures. Typical systems and similar systems may be treated as a group, with instruction on the physical layout of one such system. The results of the performance verification test and the calibration, adjustment and commissioning report shall be presented as benchmarks of HVAC control-system performance by which to measure operation and maintenance effectiveness.

-- End of Section --

SECTION TABLE OF CONTENTS

DIVISION 15 - MECHANICAL

SECTION 15970

PUMP CONTROL AND ANNUNCIATION SYSTEM

**05/99; Rev. 10/01**

PART 1 GENERAL

1.1 REFERENCES
1.2 GENERAL REQUIREMENTS
1.3 SUBMITTALS
1.3.1 GENERAL
1.3.2 Submittals
1.4 SYSTEM OVERVIEW
1.4.1 General
1.5 EXPERIENCE AND QUALIFICATIONS
1.6 WARRANTY

PART 2 PRODUCTS

2.1 PUMP CONTROL PANEL (PCP) AND COMPONENTS
2.1.1 Enclosure
2.1.2 Ventilation System
2.1.3 Ground Bar
2.1.4 Standard Indicator Lights
2.1.5 Selector Switches
2.1.6 Pushbuttons
2.1.7 Relays
2.1.8 Nameplates
2.1.9 Transient Voltage Surge Suppression Devices
2.1.10 Terminal Blocks
2.1.11 Uninteruptable Power Supplies
2.1.12 Miscellaneous Power Supplies
2.1.13 Alarm Annunciator
2.1.14 Alarm Horns
2.1.15 Laptop Computer
2.1.15.1 Hardware
2.1.15.2 Software
2.1.16 Personal Computer (PC)
2.1.16.1 Hardware
2.1.16.2 Software
2.1.17 Laser Printer
2.2 PROGRAMMABLE LOGICAL CONTROLLER (PLC) HARDWARE AND SOFTWARE
2.2.1 General
2.2.2 Central Processing Unit Module
2.2.3 Power Supply Module
2.2.4 Program Storage/Memory Requirements
2.2.5 Input/Output (I/O) Modules
2.2.6 Interfacing
2.2.7 Program Requirements
2.2.8 Diagnostics

PART 3 EXECUTION

3.1 PUMP CONTROL PANEL (PCP) AND COMPONENTS
3.1.1 General
3.1.2 Shop Tests
3.1.3 Ventilation System
3.1.4 Grounding
3.1.5 Indicator Lights, Switches, and Pushbuttons
3.1.6 Transient Voltage Surge Suppression Devices
3.1.7 Terminal Blocks
3.1.8 Uninteruptable Power Supply
3.1.9 Power Supplies
3.1.10 Alarm Annunciator and Horns
3.1.10.1 Non-critical Alarms
3.1.10.2 Critical Alarms
3.1.10.3 Alarm Sequence
3.1.11 Personal Computers
3.1.11.1 Screen Number 1
3.1.11.2 Screen Number 2
3.1.11.3 Screen Number 3
3.1.11.4 Screen Number 4
3.1.11.5 Screen Number 5
3.1.11.6 Screen Number 6
3.1.11.7 Screen Number 7
3.1.11.8 Screen Number 8
3.1.11.9 Screen Number 9
3.1.12 Laptop Computer
3.2 PROGRAMMABLE LOGICAL CONTROLLER (PLC) HARDWARE AND SOFTWARE
3.2.1 General
3.2.2 Programs
3.3 GRAPHICS DISPLAY SCREENS
3.3.1 General
3.3.2 Display Presentation
3.3.3 Process Schematic
3.4 INSTALLATION
3.4.1 Shop Drawing
3.4.2 System Start-Up and Testing
3.4.3 Training Plan for Instructing Personnel
3.5 TOOLS AND SPARE PARTS*\
3.6 PLC CONTROL SYSTEM SEQUENCE OF OPERATION
3.6.1 General
3.6.1.1 Abbreviations
3.6.2 Operating Tanks
3.6.2.1 Level Control
3.6.2.2 Outlet Valve
3.6.3 Product Recovery Tank
3.6.3.1 Fuel Transfer Pump (FTP)
3.6.3.2 Overfill Valve (OV)
3.6.3.3 High Level Alarm
3.6.3.4 Leak Detection
3.6.4 Fueling Pumps (FP)
3.6.5 Flow Switch, Fueling Pump
3.6.6 Transmitters
3.6.6.1 Pressure Indicating Transmitter (PIT)
3.6.6.2 Differential Pressure Transmitter (DPT)
3.6.6.3 Pressure Sensors
3.6.6.4 Temperature Indicating Transmitter (TIT)
3.6.7 Control Valves
3.6.7.1 Defuel/Flush Valve (D/FV)

3.6.7.2 Pressure Control Valve(PCV)
3.6.7.3 Backpressure Control Valve (BPCV)
3.6.7.4 Motor Operated Valve (MOV)
3.6.7.5 Test Control Valve (TCV)
3.6.8 Safety Circuit
3.6.8.1 Emergency Stop Status
3.6.8.2 Emergency Shutoff Valves (ESO) Status
3.6.8.3 Circuit Power Status
3.6.9 Pump Control Panel
3.6.9.1 CPU Faults
3.6.9.2 Input Select Switch
3.6.9.3 Mode Select Switch
3.6.9.4 Lead Pump Selector Switch
3.6.9.5 PCP Temperature Alarm
3.6.9.6 Bulk Fuel Transfer Pump Controls
3.6.10 Bulk Tanks
3.6.10.1 Level Control
3.6.10.2 Outlet Valve
3.6.10.3 Inlet Valve
3.6.11 Flow Switch, Transfer Pump
3.7 OPERATING PROGRAM REQUIREMENTS
3.8 AUTOMATIC MODE - IDLE CONDITION
3.9 AUTOMATIC MODE - REFUELING CONDITION
3.10 AUTOMATIC MODE - DEFUELING CONDITION
3.11 FLUSH MODE
3.12 OFF MODE
3.13 MANUAL OPERATION OF FUELING PUMPS
3.14 PRESSURE TEST
3.15 4-VALVE MANIFOLD SUPERVISION
3.16 PANTOGRAPH FLUSH MODE

-- End of Section Table of Contents --

SECTION 15970

PUMP CONTROL AND ANNUNCIATION SYSTEM
**05/99; Rev. 10/01**

PART 1 GENERAL

1.1 REFERENCES

The publications listed below form a part of this specification to the extent referenced. The publications are referred to in the text by basic designation only.

AMERICAN NATIONAL STANDARDS INSTITUTE (ANSI)

| | |
|---|---|
| ANSI C37.90 | (1989; R 1994) Relays and Relay Systems Associated with Electric Power Apparatus |

INSTITUTE OF ELECTRICAL AND ELECTRONICS ENGINEERS (IEEE)

| | |
|---|---|
| IEEE C62.41 | (1991) Surge Voltages in Low Voltage AC Power Circuits |

NATIONAL ELECTRICAL MANUFACTURERS ASSOCIATION (NEMA)

| | |
|---|---|
| NEMA 250 | (1997) Enclosures for Electrical Equipment (1000 Volts Maximum) |
| NEMA IA 2 | (1993) Programmable Controllers |
| NEMA ICS 1 | (1993) Industrial Control and Systems |
| NEMA ICS 2 | (1993) Industrial Control Devices, Controllers and Assemblies |
| NEMA ICS 3 | (1993) Industrial Systems |
| NEMA ICS 4 | (1993; Rev. 1, 1997) Industrial Control and Systems Terminal Blocks |
| NEMA ICS 6 | (1993) Enclosures for Industrial Control and Systems |
| NEMA LS 1 | (1992; R2000) Low Voltage Surge Protective Devices |

NATIONAL FIRE PROTECTION ASSOCIATION (NFPA) PUBLICATION

| | |
|---|---|
| NFPA 70 | (2002) National Electrical Code |

INSTRUMENT SOCIETY OF AMERICA (ISA)

| | |
|---|---|
| ISA S18.1 | (1979; R 1992) Annunciator Sequences and Specifications |

UNDERWRITERS' LABORATORY INC. (UL) PUBLICATION

| | |
|---|---|
| UL 508 | (1999) Industrial Control Equipment |
| UL 1012 | (1994) Power Units Other than Class 2 |
| UL 1449 | (1996) Transient Voltage Surge Suppressors |

## 1.2 GENERAL REQUIREMENTS

Section 16415A ELECTRICAL WORK, INTERIOR applies to this section, with the additions and modifications specified herein. The control system shall be furnished by a single supplier. See specification 15050 for other required components of the control system. The control system supplier shall be responsible for providing a fully functional control system, in accordance with the drawings and specifications, including the field devices. Installation shall be in accordance with NFPA 70.

## 1.3 SUBMITTALS

### 1.3.1 GENERAL

Data shall be submitted in accordance with the overall requirements detailed in Section 01330 SUBMITTAL PROCEDURES and the specific requirements of this section. Documents shall consist of a complete list of equipment and materials, manufacturer's descriptive and technical literature, brochures, catalog cuts, performance specifications, diagrams, and other material as stated in subsequent subparagraphs. The Contractor shall submit additional material if the listed items are not adequate to identify intent or conformance to technical requirements. Any delays associated with resubmittals of incomplete or ambiguous initial submittals will be the Contractor's responsibility.

### 1.3.2 Submittals

Government approval is required for submittals with a "G" designation; submittals not having a "G" designation are for information only. When used, a designation following the "G" designation identifies the office that will review the submittal for the Government. The following shall be submitted in accordance with Section 01330 SUBMITTAL PROCEDURES:

SD-02 Shop Drawings

Shop Drawings; G-AE.

SD-03 Product Data

Pump Control Panel (PCP) and Components; G-AE.

Programmable Logical Controller (PLC) Hardware and Software; G-AE.

Personal Computers (PC); G-AE.

Documents demonstrating the accuracy and completeness of the list of material and components, that items proposed comply fully with contract requirements, and are otherwise suitable for the application indicated. Documents shall consist of all data or drawings published by the manufacturer of individual items listed

including manufacturer's descriptive and technical literature, performance data, catalog cuts, and installation instructions.

Tools and Spare Parts.

SD-06 Test Reports

Certified Pump Control Panel (PCP) Shop Test Report; G-AE.

Record of Test.

SD-07 Certificates

Experience and Qualifications; G-AE.

Plan for Instructing Personnel; G-AE.

Testing Plan; G-AE.

SD-10 Operation and Maintenance Data

Operation and Maintenance Manuals; G-AE.

Six copies of Operational and Maintenance manuals, within 7 calendar days following the completion of factory tests.

Operational and Maintenance manuals shall be furnished following the completion of shop tests and shall include:

a. Pump Control Panel including interior and exterior equipment layout.

b. All documents previously submitted and approved with all comments and field changes annotated.

c. Complete description of the sequence of operation including that described in Paragraphs 3.6 through 3.13 of this specification and any subsystems not controlled by the PLC (e.g. annunciator panel, EPDS, etc.)

d. Complete listing of all programming of the PLC's, laptop computer and Personal Computers.

e. Complete relay ladder logic diagrams, PLC input/output diagrams and control power distribution diagrams for the complete control system.

f. Complete guide outlining step-by-step procedures for system startup and operation.

g. Complete troubleshooting guide, which lists possible operational problems and corrective action to be taken.

h. Complete maintenance and installation manual for all equipment supplied.

i. Spare parts data, which provides supplier name, current cost, catalog order number, and a recommended list of spare parts to be stocked.

j. The above shall incorporate all as-built conditions.

Documents shall be bound in a suitable binder adequately marked or identified on the spine and front cover. A table of contents page shall be included and marked with pertinent contract information and contents of the manual. Tabs shall be provided to separate different types of documents, such as catalog ordering information, drawings, instructions, and spare parts data. Index sheets shall be provided for each section of the manual when warranted by the quantity of documents included under separate tabs or dividers.

## 1.4 SYSTEM OVERVIEW

### 1.4.1 General

The Fuel System consists of a Bulk Storage Facility and a Hydrant Fueling System, both of which are located together at the existing Fuel Facility at Langley AFB. The Bulk Storage Facility consists of bulk fuel storage tanks and fueling pumps that, via manual control, transfer fuel tank-to-tank, as well as transferring fuel to operating storage tanks. The Hydrant Fueling System consists of fueling pumps that pump fuel to a Truck Fill Stands, and fuel pits located on the airfield apron. Automatic pump starts and stops are based on system pressure and flow. Programmable Logic Controllers (PLCs) receive information from pressure transmitters and other devices to control the pumps and control valves. There are two PLCs that are connected in a redundant configuration if one fails. The Hydrant Fueling System also includes above ground fuel storage tanks and a product recovery tank. The pump control panel and operator's console are located in the Control Room of the Pumphouse and control both hydrant pumps and bulk storage pumps.

## 1.5 EXPERIENCE AND QUALIFICATIONS

Submit the following data for approval:

a. Certification stating that the manufacturer has manufactured and installed at least three PLC-based systems for automatic cycling of pumps based upon varying dispensing demands ranging from 0 to 2400 gallons per minute utilizing multiple pumps. At least one of the three PLC-based systems shall be for dispensing jet fuel into aircraft fuel tanks.

b. Certification that the three control systems described in the preceding paragraph have successfully operated over the last 2 years and are currently in service.

c. Project names, locations, and system description of these installations. Include user point-of-contact and current telephone numbers.

d. Testing personnel, as described in paragraph 3.4.2, shall be fulltime employees of the supplier, as defined in paragraph 2.4.1 of Section 15050 "Mechanical Equipment, Fueling," and as such shall have experience and qualifications in accordance with that paragraph.

## 1.6 WARRANTY

The Pump Control and Annunciation System including devices, hardware and software shall be warranted for a period of 1 year from the date of acceptance of the system by the Government. This warranty service shall include parts and labor service for equipment supplied under this specification. Upon notification by the Government of system or component failure, the Contractor shall respond at the site with necessary parts within 48 HOURS of notification.

# PART 2 PRODUCTS

## 2.1 PUMP CONTROL PANEL (PCP) AND COMPONENTS

### 2.1.1 Enclosure

NEMA ICS 1, NEMA ICS 6, NEMA 250, and UL 508. The PCP enclosure shall be a freestanding NEMA Type 12, smooth, gasketed enclosure constructed of 12 gauge steel. All seams shall be continuously welded and there shall be no drilled holes or knockout prior to delivery to the job site. The pump control panel dimensions shall be a maximum of 90 inches high, maximum 72 inches wide, and a maximum of 24 inches deep and shall have removable lifting eyes. The interior surfaces of the panel shall be properly cleaned, primed, and spray painted with white high-gloss enamel. Exterior surfaces shall have standard factory finish. Access for the PCP shall be front only and shall consist of hinged doors having 3-point latching mechanisms. The doors shall open approximately 120 degrees. Rack mounting angles, swing-out panels and other component mounting hardware shall be installed such that servicing of one component shall not require removal or disconnection of other components. No clearance shall be required between the back of the panel and the room walls. Terminal facilities shall be arranged for entrance of external conductors from the top or bottom of the enclosure. Arrange all pushbuttons and switches such that no operator is higher than 6'-7" from finished floor with the PCP sitting on a 2-inch high housekeeping pad. Securely anchor PCP to pad per manufacturer's directions.

### 2.1.2 Ventilation System

Two supply fans, single phase, 115 volt, shall be provided. Each fan shall supply a minimum of 100 CFM. The supply and exhaust grill shall contain a filter that is easily removed from the exterior of the enclosure. Three thermostats with an adjustable set point range of 70 degreesF to 140 degrees F shall also be provided. The thermostats shall be located near the top in the interior of the PCP.

### 2.1.3 Ground Bar

The control panel shall have a tin plated copper equipment ground bar. The bar shall have a minimum of twenty grounding screws.

### 2.1.4 Standard Indicator Lights

NEMA ICS 1, NEMA ICS 2, and UL 508. Lights shall be heavy duty, NEMA 13, 22.5 mm mounting hole, round indicating lights operating at 120 volts ac/dc or 24 volts ac/dc. Long life bulbs shall be used. Indicator lights shall have a legend plate with words as shown on drawings. Lens color as indicated on the drawings. Lights shall be "push to test (lamp)" type.

2.1.5 Selector Switches

NEMA ICS 1, NEMA ICS 2, and UL 508. Non-illuminated lever operated selector switches shall be heavy duty, NEMA 13, round, and utilize a 22.5mm mounting hole. They shall have the number of positions as indicated on the drawings. Switches shall be rated 600 volt, 10 amperes continuous. Legend plates shall be provided with each switch with words as indicated on the drawings.

2.1.6 Pushbuttons

NEMA ICS 1, NEMA ICS 2, and UL 508. Non-illuminated pushbuttons shall be heavy duty, NEMA 13, round, utilize a 22.5mm mounting hole, and have the number and type of contacts as indicated on the drawings or elsewhere in the specifications. The emergency stop switch shall be a red mushroom head, 1.5 inch diameter, momentary contact type. Pushbuttons shall be rated 600 volt, 10 amperes continuous. Legend plates shall be provided with each switch with words as indicated on the drawings.

2.1.7 Relays

ANSI C37.90, NEMA ICS 2, UL 508.

2.1.8 Nameplates

Nameplates shall be made of laminated plastic with black outer layers and a white core. Edges shall be chamfered. Nameplates shall be fastened with black-finished round-head drive screws or approved nonadhesive metal fasteners.

2.1.9 Transient Voltage Surge Suppression Devices

IEEE C62.41 for Category "B" transients, NEMA LS 1, UL 1449.

2.1.10 Terminal Blocks

NEMA ICS 4. Terminal blocks for conductors exiting the PCP shall be two-way type with double terminals, one for internal wiring connections and the other for external wiring connections. Terminal blocks shall be made of bakelite or other suitable insulating material with full deep barriers between each pair of terminals. A terminal identification strip shall form part of the terminal block and each terminal shall be identified by a number in accordance with the numbering scheme on the approved wiring diagrams.

2.1.11 Uninteruptable Power Supplies

UL 1012. Input voltage shall be 120 volts (nominal), 1 phase, 60 Hertz.

Output voltage regulation shall be +/-5.0% for the following conditions:

a. 20% to 100% load on output.
b. Input voltage variation of -15% to +10%.
c. Constant load power factor between 80% and 100%.

Response time shall be 1.5 cycles or less. Battery capacity shall be such as to provide an orderly shut down of operating programs or as a minimum 10 minutes.

2.1.12 Miscellaneous Power Supplies

UL 1012. Certain field devices may require power other than 120VAC (i.e. 24VDC). The power supplies shall be convection cooled, have fully isolated independent outputs, have constant voltage, have short circuit and overvoltage protection, and have automatic current limiting.

2.1.13 Alarm Annunciator

UL 508 and ISA S18.1. The Alarm Annunciator shall provide visual annunciation, local and remote monitoring, constant or flashing visual and audible alarm as specified herein. The annunciator shall be completely solid state with no moving parts. The annunciator shall be furnished with cabinet and hardware appropriate for flush mounting on the control panel. A power supply either integral or separately mounted shall operate on 120 volts, 60 Hertz. The annunciator shall have windows arranged in a matrix configuration (rows and columns). Each window shall be at least 15/16 inch high by 1-5/8 inches wide and shall have rear illuminated translucent engraved nameplate. Lettering shall be at least 5/32 inches high. System lamp voltage shall be 24 to 28 volts dc.

2.1.14 Alarm Horns

UL 508. The alarm horns shall consist of 2-vibrating horns and 1-resonating horn. One vibrating horn is to be mounted in the PCP, and one vibrating and one resonating horn shall be mounted outside of the control room as shown on the drawings. The exterior horns shall each produce 100db at 10 feet and shall be provided in a weather proof housing. The PCP horn shall produce 70db at 10 feet.

2.1.15 Laptop Computer

2.1.15.1 Hardware

The following are the minimum hardware requirements for the laptop computer:

a. Latest Pentium CPU operating at 2 GHz or faster
b. 512 MB RAM
c. 20 G hard drive
d. CDRW floppy drive
e. Color XGA LCD screen 14.1"
f. Keyboard
g. Pointing device (e.g. mouse, track ball)
h. Parallel communication port
i. Serial communication port compatible with PLC (e.g. RS-232-C, RS-485)
j. 120VAC and Battery power supply
k. All cables and connectors for interfacing with PLC and personal computer operator

l. Modem compatible for remote troubleshooting of the system

2.1.15.2 Software

The following is the minimum software to be loaded on the laptop. The software shall be the most current versions and compatible with each other to make a complete and usable system.

a. Operating system - Windows PC
b. Software for programming the PLC
c. Software for programming the personal computer

2.1.16 Personal Computer (PC)

2.1.16.1 Hardware

The following are the minimum hardware requirements for the personal computer, which is alos identified as the "Operators Console" on sheet E2.1.:

a. Latest Pentium CPU operating at 2.40 GHZ or faster
b. 2 GB RAM
c. 40 GB hard drive
d. 3 1/2" floppy drive
e. CDRW drive
f. Color 17" flat monitor
g. Keyboard
h. Pointing device (e.g. mouse)
i. Parallel communication port
j. Serial communication port compatible with PLC (e.g. RS-232-C,RS-485
k. 120 VAC operating power
l. All cables and connectors for interfacing with PLC and Laser Printer
m. Modem compatible for remote troubleshooting of the system
n. Provide TVSS outlet strip, U.L. 1449 which protects each 120 vac line and each data/phone line.

2.1.16.2 Software

The following is the minimum software to be loaded on the personal computer. The software shall be the most current versions and compatible with each other to make a complete and usable system.

a. Operating system (e.g. Windows PC)
b. Software for programming the PLCs
c. The personal computer shall communicate with the PLCs to display system status and change system set points. The personal computer shall have run-time graphical software to display the graphical screens described later and to change set points.
d. Software for recording, tracking, trending and printing out the pressures, flows and operational status of all monitored components of the fueling system, including the weekly system pressure test, on a real time basis.

2.1.17 Laser Printer

The alarm/report printer shall be a color laser jet printer. The unit shall print in black at a minimum speed of twelve pages per minute. It shall print in color at a minimum speed of ten pages per minute. It shall as a minimum be capable of printing color graphs of various system pressures, issue flow and return flow vs. time in seven colors.

2.2 PROGRAMMABLE LOGICAL CONTROLLER (PLC) HARDWARE AND SOFTWARE

2.2.1 General

a. NEMA IA 2. Each PLC shall be able to receive discrete and analog inputs and through its programming it shall control discrete and analog

output functions, perform data handling operations and communicate with external devices and remote I/O racks. The PLCs shall be a modular, field expandable design allowing the system to be tailored to the process control application. The capability shall exist to allow for expansion to the system by the addition of hardware and/or user software. At a minimum the PLCs shall include mounting backplanes, power supply modules, CPU module, communication modules, and I/O modules.

b. Each PLC provided shall be designed and tested for use in the high electrical noise environment of an industrial plant. The PLC modules shall comply with the Federal Communication Commission's Standard 15J Part A for radio noise emissions. The programmable controller processor shall be able to withstand conducted susceptibility tests as outlined in NEMA ICS 2, NEMA ICS 3, ANSI C37.90.

c. The PLCs shall function properly at temperatures between 32 and 122 degrees F, at 5 to 95 percent relative humidity non-condensing and have storage temperatures between -40 and +140 degrees F at 5 to 95 percent relative humidity non-condensing.

d. The PLCs shall have manufacturer's standard system status indicators (e.g. power supply status, system fault, run mode status, back-up battery status).

2.2.2 Central Processing Unit Module

The CPU shall be a modular self-contained unit that will provide time of day, scanning, application (ladder rung logic) program execution, storage of the application program, storage of numerical values related to the application process and logic, I/O bus traffic control, peripheral and external device communications and self-diagnostics.

2.2.3 Power Supply Module

a. The power supply module shall be plugged into the backplane not separately mounted. The power supply shall be wired to utilize 120 VAC, 60 Hz power, the system shall function properly within the range of -10% to +15% of nominal voltage. The power supply shall provide an output to the backplane at a wattage and voltage necessary to support the attached modules. A single main power supply module shall have the capability of supplying power to the CPU module and local communication and I/O modules. Auxiliary power supplies shall provide power to remote racks.

b. Each power supply shall have an integral on/off disconnect switch to the module. If the manufacturers standard power supply does not have an on/off disconnect switch a miniature toggle type switch shall be installed near the PLC and clearly labeled as to its function.

c. The power supply shall monitor the incoming AC line voltage for proper levels and have provisions for both over current and over voltage protection. If the voltage level is detected as being out of range the system shall have adequate time to complete a safe and orderly shutdown.

2.2.4 Program Storage/Memory Requirements

a. The PLC shall have the manufacturers standard nonvolatile executive memory for the operating system. The PLC shall also have EEPROM (Electrically Erasable Programmable Read Only Memory) for storage of the user program and battery backup RAM for application memory. The EEPROM

shall be loaded by use of the laptop computer.

b. The contractor shall submit a calculation of the required amount of EEPROM and RAM (random access memory) needed for this application plus an extra 50 percent.

c. The number of times a normally open (N.O.) and/or normally closed (N.C.) contact of an internal output can be programmed shall be limited only by the memory capacity to store these instructions.

2.2.5 Input/Output (I/O) Modules

a. The Contractor shall provide all required I/O modules (analog input, analog output, discrete input, discrete output, and isolated discrete output) to manipulate the types of inputs and outputs as shown on the drawings and to comply with the sequence of operations. The Contractor shall also provide a minimum of 20% (round up for calculation) spare input and output points of each type provided, but not less than 2 of each type.

b. I/O modules shall be a self-contained unit housed within an enclosure to facilitate easy replacement. All user wiring to I/O modules shall be through a heavy-duty terminal strip. Pressure-type screw terminals shall be used to provide fast, secure wire connections. The terminal block shall be removable so it is possible to replace any input or output module without disturbing field wiring.

c. During normal operation, a malfunction in any remote input/output channel shall affect the operation of only that channel and not the operation of the CPU or any other channel.

d. Isolation shall be used between all internal logic and external power circuits. This isolation shall meet the minimum specification of 1500 VRMS. Provide optically isolated I/O components which are compatible with field devices.

e. Each I/O module shall contain visual indicators to display ON/OFF status of individual input or output points.

f. Discrete output modules shall be provided with self-contained fuses for overload and short circuit protection of the module.

g. All input/output modules shall be color coded and titled with a distinctive label.

2.2.6 Interfacing

The PLC shall have communication ports and communication modules using the manufacturers standard communication architecture for connections of the Personal Computer, Laptop Computer, remote I/O racks and interconnections between SYS 1 PLC and SYS 2 PLC for the redundant backup system of the PLCs.

2.2.7 Program Requirements

a. The programming format shall be ladder diagram type as defined by NEMA IA 2.

b. There shall be a means to indicate contact or output status of the contact or output on the CRT (of the personal computer) or LCD screen (of the laptop computer). Each element's status shall be shown independently,

regardless of circuit configuration.

c. The program shall be full featured in its editing capabilities (e.g. change a contact from normally open to normally closed, add instructions, change addresses, etc.).

2.2.8 Diagnostics

The CPU shall continuously perform self-diagnostic routines that will provide information on the configuration and status of the CPU, memory, communications and I/O. The diagnostic routines shall be regularly performed during normal system operation. A portion of the scan time of the controller should be dedicated to perform these housekeeping functions. In addition, a more extensive diagnostic routine should be performed at power up and during normal system shutdown. The CPU shall log I/O and system faults in fault tables, which shall be accessible for display. When a fault shuts down a CPU, a sequence shall be initiated that will automatically switch over to the other CPU. When a fault affects I/O or communication modules the CPU shall shut down only the hardware affected and continue operation by utilizing healthy system components. All faults shall be annunciated on the alarm annunciator.

PART 3 EXECUTION

3.1 PUMP CONTROL PANEL (PCP) AND COMPONENTS

3.1.1 General

a. Wiring methods and practices shall be in accordance with NEMA ICS 1,2,3,4, and 6 recommendations as applicable. Where two or more pieces of equipment performing the same function are required, they shall be exact duplicates produced by the same manufacturer. All display instruments of each type shall represent the same outward appearance, having the same physical size and shape, and the same size and style of numbers, characters, pointers, and lamp lenses.

b. The PCP shall include all required resident software programs and hardware to provide the specified sequence of operation. All software floppy disks including programming manuals shall be turned over to the Government at the completion of start-up so modification can be done in the field with no outside assistance.

c. It is intended that process controlling devices except field devices, and motor controllers be attached to or mounted within the PCP enclosure and all interconnecting wiring installed prior to shipment to the job site. This is to allow shop testing of the system and to decrease field labor requirements.

d. The PCP shall be shipped fully assembled in one piece after the completion of the shop tests and all defects corrected.

e. Provide hardcopy of control wiring information lists in PCP and in all terminal cabinets. List shall include wire/circuit numbers, "to" and "from" description, any required color coding terminal numbers and other related information in a tabulated list form, supplemented with diagrams where necessary.

3.1.2 Shop Tests

Certified Pump Control Panel (PCP) Shop Test Report

The manufacturer shall shop test the PCP and personal computers. The procedure shall include simulation of field components and shall provide for fully testing the pump control and annunciator system as a unit before delivery to the project site. The test shall, reveal system defects, including, but not limited to, functional deficiencies, operating program deficiencies, algorithm errors, timing problems, wiring errors, loose connections, short circuits, failed components and misapplication of components. The test shall be performed prior to shipment to the site and problems detected shall be corrected. The final testing and correction sequence shall be repeated until no problems are revealed and then two additional successful tests shall be performed. Submit certified test report within 15 days after completion of the test. The report shall include a statement that the Pump Control Panel performs as specified. The Contractor shall notify the Government 30 days prior to the final shop testing date. The Contracting Officer may require a Government witness at the final test before the PCP is shipped to the site.

3.1.3 Ventilation System

Thermostat T-1, shall control fan F-1 and thermostat T-2 shall control fan F-2. T-1 and T-2 shall be set at 80 degrees F to maintain interior air temperature to 20 degrees F above ambient. Thermostat T-3, set at 100 degrees F, shall provide a non-critical PCP HIGH TEMPERATURE alarm to the alarm annunciator.

3.1.4 Grounding

The PCP ground bar shall be connected to the building counterpoise via a #6 AWG conductor. Within the enclosure all I/O racks, processor racks, and power supplies, etc. shall be grounded to meet the manufacturer's specifications.

3.1.5 Indicator Lights, Switches, and Pushbuttons

Indicator lights, switches, and pushbuttons shall be mounted through the PCP enclosure and shall be arranged to allow easy vision and operation of each device. Each device shall have a nameplate and/or legend plate as indicated on the drawings. Nameplate wordings shall be as indicated on the drawings.

3.1.6 Transient Voltage Surge Suppression Devices

Transient voltage surge suppression (TVSS) devices shall be installed in the PCP to minimize effects of nearby lightning strikes, switching on and off motors and other inductive loads. TVSS shall be provided for each control circuit ladder. Each ladder may contain any combination of the following devices: PLCs, power supplies (e.g., 24 volt), fans, relays, lights, switches etc. TVSS shall also be provided for PLC I/O originating outside of the building.

3.1.7 Terminal Blocks

As a minimum, any PCP device that connects to a field device (devices not located in the PCP) shall be connected to a terminal block. A connection diagram similar to the drawings shall be provided to the field contractor

for field connections to the PCP.

3.1.8 Uninteruptable Power Supply

The Pump Control Panel (PCP) shall contain three uninteruptable power supplies (UPS) each connected to a dedicated circuit. As shown on the drawings one UPS shall supply PLC System 1, one UPS shall supply PLC System 2, and the third UPS shall supply the miscellaneous device power. The UPS output capacity shall be sufficient to drive all the equipment connected plus 25%.

a. The UPS system shall provide continuous on-line protection from loss of power and provide lightning and surge protection conforming to ANSI/IEEE C62.41 - Categories A and B. Unit shall be UL listed, CSA certified and FCC class A and B listed. Input voltage shall be 96V AC to 138V AC, 55 to 63 Hz, single-phase.

b. Output protection shall be automatic for current and overvoltage. The output waveform shall be sine-wave and on line. Provide regulated, stepped sine-wave on inverter. Output voltage shall be 120V AC, single phase. Recovery time shall be less than 50 msec.

c. The UPS output shall conform to the following: Voltage regulation shall be +/- 2%. Transient Response: +/- 8% for 30% step load; 50 msec recovery time. Harmonic Distortion: 5% THD. Line Sync Range: 60 Hertz, +/- 5%. Slew Rate 1 Hz/sec maximum. Frequency Regulation +/- 25%. Overload: 110% for 10 minutes on inverter. 150% for 10 minutes on-line.

d. The noise generated by the unit shall be limited as follows: 33db in common mode, 47 db in normal mode. Provide a full-time multistage filter.

e. The manufacturer shall provide a full one-year warranty for all parts and labor on the unit. The manufacturer shall also provide a two-year warranty on lightning and surge protection elements.

f. Batteries shall be sealed and maintenance free. Provide a minimum runtime of 13 minutes at half load and 5 minutes at full load.

3.1.9 Power Supplies

The Contractor shall provide and install all 120VAC and 24VDC power supplies as required. The power supplies shall be sized for the load plus 25%. All field devices, which require power and are controlled or monitored from the PCP, shall be supplied from power supplies in the pump control panel. A 120V receptacle shall be provided in the PCP for use by the Laptop computer. Interconnecting wiring between UPS and PLC power supplies shall be completely installed prior to shipment to the job site.

3.1.10 Alarm Annunciator and Horns

Signals shall be initiated by hardwired field contacts or by PCP outputs as required. The annunciator shall energize alarm horns, both an integral panel mounted vibrating horn and remote horns, and flash the appropriate annunciator lamp. The minimum number of windows shall correspond to the number of alarm points, plus 15 percent spare. The drawings indicate panel layout and the alarms to be annunciated.

3.1.10.1 Non-critical Alarms

Non-critical alarm windows shall be white with black lettering and shall sound the PCP mounted vibrating horn and the exterior mounted vibrating horn.

3.1.10.2 Critical Alarms

Critical alarm windows shall be red with white lettering and shall sound the PCP mounted vibrating horn and the exterior mounted resonating horn. Critical alarms shall also cancel all automatic pump starts in the PLC.

3.1.10.3 Alarm Sequence

Alarm sequence for each alarm shall be as follows (ISA S18.1 sequence 'A').

a. For a normal condition, visual indicator and horns will be off.
b. For an alarm condition, visual indicator will flash and horns will sound (this condition will be locked in).
c. Upon acknowledgment of the alarm condition, visual indicator will be steady on and the horns will be off.
d. If, after acknowledgment of an alarm condition, another alarm condition is established, the new alarm will cause the appropriate window to flash and the horn to sound.
e. When condition returns to normal after acknowledgment, the visual indicator and the horn will be off.

3.1.11 Personal Computers

Each personal computer shall be a stand alone, desk top mounted unit. The personal computer shall download system parameters from the PLC for display. Each personal computer shall also upload new set point values that the operator has changed using the personal computer keyboard, after a password has been entered.

3.1.11.1 Screen Number 1

This shall be a general opening screen. As a minimum it shall display the name and location of the installation (e.g. Travis Air Force Base, California), name of the project (e.g., Hydrant Fueling System 'Pumphouse Baker') and screen navigation information.

3.1.11.2 Screen Number 2

At a minimum the following items shall be displayed. The values shall be continuously updated, a 2 second delay maximum between updates will be acceptable.

| | | |
|---|---|---|
| a. System Issue Rate | xxxx GPM | |
| b. System Return Rate | xxxx GPM | |
| c. System Net Flow | xxxx GPM | |
| d. System Pressure | xxxx PSI | |
| e. System Operation Mode | Auto/Off/Flush/Test | |
| f. Active System | Sys-1/Sys-2 | |
| g. Lead Pump | 1/2/3/4/5 | |
| h. Fuel Pump #1 | On/Off | xxxxx.x HOURS |
| i. Fuel Pump #2 | On/Off | xxxxx.x HOURS |
| j. Fuel Pump #3 | On/Off | xxxxx.x HOURS |
| k. Fuel Pump #4 | On/Off | xxxxx.x HOURS |

| | | |
|---|---|---|
| l. Fuel Pump #5 | On/Off | xxxxx.x HOURS |
| m. Backpressure Control Valve | Closed/Enabled | |
| n. Pressure Control Valve | Closed/Enabled | |
| o. Defuel/Flush Valve | Closed/Defuel | |
| p. Tank #1 Outlet Valve | Open/Closed | |
| q. Tank #2 Outlet Valve | Open/Closed | |
| r. Receipt Bypass Valve | Open/Closed | |
| s. Manifold Setup Valve I34 | Open/Closed | |
| t. Manifold Setup Valve I35 | Open/Closed | |
| u. Manifold Setup Valve R10 | Open/Closed | |
| v. Manifold Setup Valve R11 | Open/Closed | |
| w. Transfer Pump #1 | On/Off | xxxxx.x HOURS |
| x. Transfer Pump #2 | On/Off | xxxxx.x HOURS |
| y. Tank #3 Outlet Valve | Open/Closed | |
| z. Tank #3 Inlet Valve | Open/Closed | |
| aa.Tank #4 Outlet Valve | Open/Closed | |
| bb.Tank #4 Inlet Valve | Open/Closed | |
| cc.Tank #5 Outlet Valve | Open/Closed | |
| dd.Tank #5 Inlet Valve | Open/Closed | |
| ee.Tank #6 Outlet Valve | Open/Closed | |
| ff.Tank #6 Inlet Valve | Open/Closed | |

Only one of the words separated by a slash (/) shall be displayed. The xxxxx.x HOURS is the fuel pumps elapsed run time and the value shall not be lost when the lead PLC is switched. The pump and valve status words shall be color coded to match the colors used on the graphics display screen.

3.1.11.3 Screen Number 3

The following table shall be displayed. The table lists the set points that can be adjusted using the operator interface. A password shall be entered before the "current value" can be adjusted. The value entered can only be a number within the "set point range". The "default value" is the value held in the program that is loaded into EEPROM memory (This screen may require more than one display screen.).

| SET POINT DESCRIPTION | SET POINT RANGE | DEFAULT VALUE | CURRENT VALUE |
|---|---|---|---|
| Lead pump starting pressure | 30 to 150 psi | 60 psi | xxx psi |
| Issue flow to start second pump in the sequence | 450 to 650 gpm | 560 gpm | xxx gpm |
| Issue flow to start third pump in the sequence | 1000 to 1300 gpm | 1160 gpm | xxxx gpm |
| Issue flow to start fourth pump in the sequence | 1600 to 1900 gpm | 1760 gpm | xxxx gpm |
| Return flow to enable next pump in sequence to start | 10 to 100 gpm | 40 gpm | xxx gpm |
| Return flow to stop fourth, third and second pump in the sequence (lag pump) | 500 to 800 gpm | 700 gpm | xxx gpm |

| | | | |
|---|---|---|---|
| Return flow to initiate lead pump shutdown sequence | 500 to 800 gpm | 560 gpm | xxx gpm |
| Timer to enable start-up of lead pump | 0 to 120 seconds | 0 seconds | xxx seconds |
| Timer to enable second, third and fourth pumps to start | 0 to 120 seconds | 10 seconds | xxx seconds |
| Timer to stop fourth, third and second pumps | 0 to 120 seconds | 15 seconds | xxx seconds |
| Timer to stop first pump | 0 to 60 seconds | 2 seconds | xxx seconds |
| Timer to disable Back Pressure Control Valve | 0 to 360 seconds | 300 seconds | xxx seconds |
| Timer to enable Defuel/Flush Valve After Pump Shutdown | 0 to 60 seconds | 30 seconds | xxx seconds |
| Timer to establish fueling pump failure | 5 to 30 seconds | 15 seconds | xxx seconds |
| System pressure to stop lead pump | 130 to 190 psig | 140 psig | xxx psig |
| Pressure Test Set Point (Closes MOV) | 100 to 180 psi | 120 psig | xxx psi |
| Timer to Shutdown Pump During Pressure Test (Once MOV Closes) | 0 to 120 seconds | 15 seconds | xxx seconds |
| Timer to establish transfer pump failure | 5 to 30 seconds | 15 seconds | xxx seconds |

3.1.11.4 Screen Number 4

This screen shall be a duplicate of the Graphic Display Drawing showing a schematic of the process flow. This screen shall be referred to as the graphical display. Many operating parameters shall be displayed here as required in later paragraphs of this specification.

3.1.11.5 Screen Number 5

This screen shall be a duplicate of the Alarm Annunciator and it shall be superimposed over the current active screen when an alarm is activated.

3.1.11.6 Screen Number 6

This screen shall be a screen designed solely for assisting the testing team during initial start up to watch all of the significant parameters of the systems operation simulateneously on one screen. This screen shall include the system parameters i.e. (flows, pressures and status) from Screen 2, the set points from Screen 3 and timers for all of the actions that will take place following a delay function.

3.1.11.7 Screen Number 7

This screen shall be a screen designed soley for displaying the seven graphs as described in the System Start-Up, Fueling System Specification 15899. The following values shall be displayed concurrently against time: Issue flow, Issue pressure, Return flow, Pump #1 discharge pressure, Pressure upstream of BPCV, Pressure downstream of BPCV and Hydrant Pit Pressure. The personal computer shall be capable of storing up to 1 week of data corresponding to the above values. The system will be able to produce graphs on the screen of this data nd be able to print the data in seven colors on the laser printer.

3.1.11.8 Screen Number 8

Screen 8 shall be a screen designed solely for displaying the parameters and process involved in the System Pressure Test as described in this specification and on the drawings. The following values will be displayed concurrently against time: Pressure (as sensed by PIT L1), Pressure (as sensed by PIT L2) and pipeline product temperature (as sensed by TIT 1). Also, the screen shall indicate pump running/stop indication, the motor operated valve status (open/close/fault). A vertical line representing the time that the MOV is fully closed shall be superimposed over the timeline. The personal computers shall be capable of storing up to 6 months of data from the above tests, based on the System Integrity Test being performed once a week.

3.1.11.9 Screen Number 9

This screen shall be a duplicate of the Graphic Display Bulk Tanks during E8.8 showing a schematic of the process flow. This screen shall be referred to as the Bulk Tanks Graphic Display. Many operating parameters shall be displayed here as required in later paragraphs of this specification.

3.1.12 Laptop Computer

The Laptop computer shall be used to create, edit, and load the ladder logic program into the PLCs and the operator interface graphics control program into the personal computer. The Laptop shall also be used to monitor the PLCs memory and ladder logic program. The computer shall be stored in a lockable cabinet located within the Pump Control Panel.

3.2 PROGRAMMABLE LOGICAL CONTROLLER (PLC) HARDWARE AND SOFTWARE

3.2.1 General

The basic operation of the redundant PLC system is (Reference "Control System Block Diagram" on the drawings):

a. CPU-1 and it's associated I/O rack (I/O-1) sends system outputs to appropriate devices and receive input signals from System-1 redundant field devices (PIT-1, DPT-1, DPT-3, flow switches, valve limit switches), System-2 redundant field devices (PIT-2, DPT-2, DPT-4, flow switches, valve limit switches), and all nonredundant field devices as listed on the drawings.

b. CPU-2 and it's associated I/O rack (I/O-2) sends system outputs to appropriate devices and receive input signals from System-1 redundant field devices (PIT-1, DPT-1, DPT-3, flow switches, valve limit switches),

System-2 redundant field devices (PIT-2, DPT-2, DPT-4, flow switches, valve limit switches), and all nonredundant field devices as listed on the drawings.

c. Within each rack (I/O-1 and I/O-2) System-1, System-2, and nonredundant inputs and outputs shall not be mixed on the same input/output module.

d. Under normal operation: The system input select switch is in the "SYS-1" position. CPU-1 is controlling the system using System-1 and nonredundant inputs from I/O-1 and any set point changes from the personal computer. CPU-2 is being updated by CPU-1 or concurrently monitoring System-1 inputs from I/O-2.

e. If under normal operation CPU-1 recognizes that a System-1 input has failed (see note below) it shall change over to the System-2 redundant input on I/O-1 and report the failure to the personal computer alarm screen.

Note: The pressure indicating transmitters and the differential pressure transmitters are the only devices that the PLC can monitor for a possible failure. A failure shall be defined by the transmitter going out of range on the low side (i.e. a signal less than 4mA).

f. During normal operation there are two ways for CPU-2 to take control of the system: 1) CPU-1 identifies its own internal fault and hands over control to CPU-2. 2) CPU-2 identifies a fault in CPU-1 and takes control from CPU-1. When CPU-2 is in control of the system it shall annunciate the fault condition and shall be using any updated inputs from the personal computer and shall use System-1 inputs. If CPU-2 senses a fault on a System-1 input it shall then switch over to the appropriate System-2 input. If power is lost to System-1 inputs then CPU-2 shall use all of the System-2 inputs.

g. CPU-2 shall also report any of its internal faults to CPU-1 and CPU-1 shall report any faults it detects in CPU-2.

h. When the operators think the system is not working and the PLCs do not detect any faults the operator can move the system input select switch from the "SYS-1" position to the "SYS-2" position. With the switch in the "SYS-2" position the PLCs are using System-2 inputs.

### 3.2.2 Programs

a. The Contractor shall provide two copies of all working programs (i.e. PLC logic, personal computer) on 3-1/2 inch floppy disks as well as a printer program listing.

b. The Contractor (programmer) shall provide rung comments (documentation) in the ladder logic program. Each device, on the ladder, shall be identified as to the type of device, i.e. limit switch XX, flow indicator XX, motor starter XX, etc. Rung comments shall be provided for input and output rungs. The programmer shall also provide a comment describing the function of each rung or group of rungs that accomplish a specific function.

## 3.3 GRAPHICS DISPLAY SCREENS

### 3.3.1 General

Bothgraphic display screens shall be displayed on the personal computer.

3.3.2 Display Presentation

Each Graphic Display Screen shall depict the process fuel flow schematically as indicated on the drawings. Red, green, and amber symbols shall be integrated with the process schematic to provide current equipment status graphically. The symbols shall be located immediately adjacent to related equipment symbol.

3.3.3 Process Schematic

The process schematic graphic representation shall utilize conventional symbols when possible. Symbols and flow lines shall be sized and spaced so as to provide a clear representation of the system process. Minor changes may be incorporated to allow proper line width and spacing. Component arrangement, piping routing, and location of valves shall match the flow diagram.

3.4 INSTALLATION

Installation shall conform to the manufacturer's drawings, written recommendations and directions.

3.4.1 Shop Drawing

The shop drawing shall be clear and readable and preferably drawn using a computer aided drafting package. At the conclusion of the project the diagram drawings shall be redrafted to include all as-built conditions. These updated drawings shall be included in the O&M Manuals and appropriate section of the drawings placed in a data pocket located in each of the enclosures. The shop drawing at a minimum shall show:

a. Overall dimensions, front, side and interior elevation views of the PCP showing size, location and labeling of each device.
b. Color graphical layout of each screen.
d. Power ladder diagram indicating power connections between TVSS, power conditioners, PLCs, power supplies and field and panel devices. Any terminal block connection numbers used shall be indicated.
e. Control ladder diagram indicating control connections between field and devices and PLC I/O modules. Terminal block connection numbers and PLC terminal numbers shall be indicated
f. Communication connections between PLCs and I/O racks. Communication channel numbers shall be indicated.
g. Bill of materials.
h. Written control sequence covering all inputs, outputs, and control scheme.
i. Overall dimensions of the Tank Level Alarm Panel (TAP), showing exterior and interior views of the TAP. Indicate location of each device. Label each device. Refer to Section 15050 "Mechanical Equipment, Fueling" for a description of the TAP.

3.4.2 System Start-Up and Testing

a. At PCP start-up and testing the Contractor shall provide personnel, on site, to provide technical assistance, program fine tuning, and to start-up and test the system. Start-up and testing shall be coordinated with the overall fueling system start-up test specified in Section 15899, SYSTEM START-UP, FUELING SYSTEM. Prior to this test, all connections shall

have been made between the PCP, the personal computer, the motor control center, and all field devices. In addition, wiring shall have been checked for continuity and short circuits. The Contractor shall adjust set point values, timing values, and program logic as required to provide a functional hydrant fuel control system. Once the system has been fine tuned and passed the system test, the new system default values, shall be loaded into the PLC EEPROM and the personal computer screens adjusted to indicate the new values.

b. A step-by-step testing procedure of the PCP shall be submitted, Testing Plan. The test shall be designed to show that every device (lights, switches, personal computer display screens, alarms, etc.) on the PCP and personal computer is in working order and that the PLC program controls the system per specifications. The test shall be performed in conjunction with Section 15899. The plan shall include a place for the contractor and government representative to initial each step of the plan after satisfactory completion and acceptance of each step. The complete initialed testing plan shall be certified by the contractor and then submitted, Record of Test.

3.4.3 Training Plan for Instructing Personnel

a. Upon completion of the system start-up a competent technician regularly employed by the PCP manufacturer shall hold a training class for the instruction of Government personnel in the operation and maintenance of the system. Provide both classroom type theory instruction and hands-on instruction using operating equipment provided. The period of instruction shall be a minimum of three 8-hour working days. The training shall be designed to accommodate 8 operators, 4 maintenance personnel, and 2 programmers. The Government shall receive written notice (via Contracting Officer) a minimum of 14 days prior to the date of the scheduled classes.

b. Furnish a written lesson plan and training schedule for Government approval at least 60 days prior to instructing operating, maintenance and programming personnel. Concurrently submit above to the MAJCOM for their input into the review process. Approval of lesson plan will be based on both Government and MAJCOM concurrence. This plan shall be tailored to suit the requirements of the Government. The training shall be divided into three separate classes. Each class shall be tailored to a specific group of personnel. The groups are: 1) Operators, those that will use the control system on a day to day basis; 2) Maintenance personnel, those that will perform routine and non-routine maintenance and trouble shooting of the control system; 3) Programmers, those that will make changes to and trouble shoot the PLC and personal computer programs. The training program shall provide:

(1) a detailed overview of the control system including the complete step-by-step procedures for start-up, operation and shut-down of the control system.
(2) a general overview of programmable logic controllers
(3) the maintenance of equipment installed
(4) the programming of the PLC and Personal Computer
(5) trouble shooting of the system

c. Complete approved Operation and Maintenance manuals for Specification 15970 PUMP CONTROL AND ANNUNCIATION SYSTEM and 16415A ELECTRICAL WORK, INTERIOR WIRING SYSTEMS (specifically pertaining to the motor control center and its relay ladder diagrams) shall be used for instructing operating personnel. Training shall include both classroom and

hands-on field instruction. The class shall be video taped in the VHS format.

d. The contractor shall also provide VHS formatted video taped training courses covering system overview, operation, maintenance, trouble shooting, and programming. These tapes shall be produced off-site by the contractor using the supplied Pump Control Panel as the teaching aid, or commercially produced tapes by the PLC manufacturer or third party who specializes in training on PLC systems. Along with the tapes, provide workbooks, which follow along with the tapes.

## 3.5 TOOLS AND SPARE PARTS*\

The following shall be provided:

a. any special tools necessary for maintenance of the equipment
b. one spare set of fuses of each type and size
c. recommended manufacturer list of spare parts. Include part number, current unit price, and source of supply.
d. one spare power supply module
e. one spare I/O module (for discrete devices)
f. one spare I/O module (for analog devices)
g. 2 PLC RAM back-up batteries
h. minimum of 10 spare lamps for the Alarm Annunciator
i. minimum of 10 spare lamps of each type of non-LED lamps used on the Pump Control Panel and Graphic Display Panel
j. one spare tank level alarm module

## 3.6 PLC CONTROL SYSTEM SEQUENCE OF OPERATION

### 3.6.1 General

The following describes general functions of the fueling system components.

#### 3.6.1.1 Abbreviations

a. SYS-1: components of System #1 including power conditioner, power supplies, CPU-1, I/O-1, and system #1 input and outputs.
b. SYS-2: components of System #2 including power conditioner, power supplies, CPU-2, I/O-2, and system #2 input and outputs.
c. CPU-1: SYS-1 PLC CPU.
d. CPU-2: SYS-2 PLC CPU.
e. I/O-1: SYS-1 PLC input/output modules.
f. I/O-2: SYS-2 PLC input/output modules.
g. PCP: Pump Control Panel.
h. PC: Personal Computers

### 3.6.2 Operating Tanks

#### 3.6.2.1 Level Control

Each operating tank has three level switches to measure low, high and high-high levels. The switches are DPDT for the redundancy and each pole shall be connected to both SYS-1 and SYS-2 as indicated on the Terminal Block Connection drawing.

a. Low Level

When the low level switch is activated the associated tank's graphic display low level light shall light. If the outlet valve is not fully closed the alarm annunciator's critical alarm sequence activates, fueling pumps running in automatic mode or the test mode shall be disabled and no pump shall be allowed to start automatically. If all tanks are at low level, no fueling pumps shall start automatically.

b. High Level

When the high level switch is activated the associated tank's graphic display high level light shall light and the alarm annunciator's non-critical alarm sequence activates.

c. High-High Level

When the high-high level switch is activated the associated tank's graphic display high-high level light shall light, the alarm annunciator's critical alarm sequence activates, fueling pumps running in automatic mode or test mode shall be disabled and no pump shall be allowed to start automatically.

3.6.2.2 Outlet Valve

Each operating tank's outlet valve has a limit switch to indicate valve position. The switch is DPDT for redundancy and each pole shall be connected to both SYS-1 and SYS-2 as indicated on the Terminal Block Connection drawing. The switch shall close when the valve is fully closed. When the limit switch is closed the associated tank's valve graphic display closed light shall activate. When the limit switch is open, the associated tank's valve graphic display open light shall activate.

Provide an interlock with Operating Tank 1 and Operating Tank 2 outlet valve limit switches which will activate a critical alarm at the PCP anytime both outlet valves are open or when both outlet valves are closed and a hydrant fuel pump is running and/or called upon to start. The critical alarm shall sound at the PCP and shall sound exterior alarm horns. In addition, the PCP annunciator shal illuminate to indicate the appropriate pump(s) failure. The alarm shall reset when either tanks outlet valve is changed in position (opposite the other tank's outlet valve) and when the PCP is reset.

3.6.3 Product Recovery Tank

3.6.3.1 Fuel Transfer Pump (FTP)

The pump's motor controller has a status relay to indicate the on/off status of the pump. The status relay shall be connected to both SYS-1 and SYS-2 as indicated on the Terminal Block Connection drawing. When status relay is open the pump's graphic display off light shall light. When the status relay is closed the pump's graphic display on light shall light. The status relay state shall also be used to start and stop the pumps elapsed run time timer.

3.6.3.2 Overfill Valve (OV)

The tank's overfill valve has a limit switch to indicate valve position. The switch is SPST and shall be connected to both SYS-1 and SYS-2 as indicated on the Terminal Block Connection drawing. The switch shall close when the valve is fully closed. When the limit switch is closed the tank's graphic display valve closed light shall light and the alarm annunciator's

non-critical alarm sequence activates to shut off all fuel pumps and to not allow any fuel pumps (including bulk transfer pumps) to run until the condition and alarm has been cleared. When the limit switch is open the tank's graphic display valve open light shall light.

3.6.3.3 High Level Alarm

The tank has a high level alarm float switch. The switch is SPST and shall be connected to both SYS-1 and SYS-2 as indicated on the Terminal Block Connection drawing. When the high level alarm float is activated the tank's graphic display high level light shall light and the alarm annunciator's non-critical alarm sequence activates.

3.6.3.4 Leak Detection

The tank has a leak detection system. The leak detection systems alarm relay shall be connected to both SYS-1 and SYS-2 as indicated on the Terminal Block Connection drawing. When the leak alarm is activated the alarm annunciator's non-critical alarm sequence activates. Refer to Section 15050, "Mechanical Equipment, Fueling" for leak detection system.

3.6.4 Fueling Pumps (FP)

There are five fueling pumps with a maximum of four pumps running at one time. The lead pump selector switch shall select the pump starting sequence. Each pump's motor controller has a status relay to indicate the on/off status of the pump. The status relay shall be connected to both SYS-1 and SYS-2 as indicated on the Terminal Block Connection drawing. When status relay is open the associated pump's graphic display off light shall activate and screen number 2 shall indicate on. When the status relay is closed the associated pump's graphic display on light shall activate and screen number 2 shall indicate off. The status relay state shall also be used to start and stop the pumps elapsed run time timer and shall be displayed on screen number 2.

3.6.5 Flow Switch, Fueling Pump

On the discharge side of each pump is a flow switch to indicate positive flow (fail safe feature). The flow switch is DPDT for redundancy and each pole shall be connected to both SYS-1 and SYS-2 as indicated on the Terminal Block Connection drawing. If the PLC has given a signal to start a pump and the flow switch has not closed before the set point timer expires or if the flow switch opens after the pump has been running then the pump shall be in a failure state and it shall be disabled (taken out of the starting sequence), the alarm annunciator's non-critical alarm sequence shall also be activated, and the next pump in the start sequence started. After the PLC has stopped all of the pumps, any failed pump shall be added back into the start sequence.

3.6.6 Transmitters

3.6.6.1 Pressure Indicating Transmitter (PIT)

The PIT's measure system pressure in psi. There are two PITs on the issue manifold for redundancy. PIT-1 and PIT-2 are connected to both SYS-1 and SYS-2 as indicated on the Terminal Block Connection drawing. The system pressure is sent to each personal computer display.

Additionally, there are PIT's measuring system pressure (psi) of the

hydrant loop for pressure (system) test data. Each PIT is connected to SYS-1 and are not configured redundant. PIT-L1 is located downstream from the isolating plug valve I25 on the 12-inch issue line. PIT-L2 is located upstream of the isolating plug valve I26 on the 12-inch return line.

3.6.6.2 Differential Pressure Transmitter (DPT)

The DPT's measure flow in gpm. There are two issue DPTs (DPT-1 and DPT-2) and two return DPTs (DPT-3 and DPT-4) for redundancy. The DPTs are connected to both SYS-1 and SYS-2 as indicated on the Terminal Block Connection drawing. The net flow is sent to the personal computer display. The issue rate, return rate and net flow shall be displayed on the personal computer.

3.6.6.3 Pressure Sensors

The PS's measure system pressure in psi. There are three PS's installed on the system and there are PCP preparations made for a fourth PS to be temporarily wired in from a Hydrant Pit. PS-1, PS-2 and PS-3 are connected to SYS-1 only as indicated on the Terminal Block Connection drawing. These sensors will report various system pressures to the personal computer to be used only for the creation of the sytem graphs as required for screen 7 and described in Specification Section 15899.

3.6.6.4 Temperature Indicating Transmitter (TIT)
The TIT measures the hydrant fuel loop fuel temperature in degrees F. TIT-1 is connected to SYS-1 and is non-redundant. TIT-1 is located adjacent to PIT-L2 (or as option may be contained within PIT-L2). System fuel tempreature is recorded for pressure test data.

3.6.7 Control Valves

3.6.7.1 Defuel/Flush Valve (D/FV)

The D/FV shall be connected to I/O-1, I/O-2 and UPS #3 as indicated on the Terminal Block Connection drawing. The graphical display open and closed lights and screen number 2 status shall activate based on the PLC's output status for the valve. The valve status shall be based on the table listed below.

Defuel/Flush Valve Operation - Two Solenoids

| Fueling Mode per PCP Selector Switch | Valve Action | Solenoid A | Solenoid B | Illuminated GDP Light |
|---|---|---|---|---|
| Flush Mode | Open | De-Energized | Energized | Flush |
| Automatic Mode Pump(s) On | Closed | De-Energized | De-Energized | Closed |
| Automatic Mode Pumps Off | Enabled | Energized | De-Energized | Defuel |
| Off Mode Pump(s) On | Closed | De-Energized | De-Energized | Closed |
| Off Mode Pumps Off | Enabled | Energized | De-Energized | Closed |
| Test Mode Pump On | Closed | De-Energized | De-Energized | Closed |

| | | | | |
|---|---|---|---|---|
| Test Mode Pump Off | Enabled | Energized | De-Energized | Closed |
| Pantograph Flush Mode | Open | De-Energized | Energized | Flush |

3.6.7.2 Pressure Control Valve(PCV)

The PCV shall be connected to I/O-1, I/O-2 and UPS #3 as indicated on the Terminal Block Connection drawing. The graphical display enabled and closed lights and screen number 2 status shall activate based on the PLC's output status for the valve. The valve status shall be based on the table listed below.

Pressure Control Valve Operation - One Solenoid

| Fueling Mode per PCP Selector Switch | Valve Action | Solenoid | Illuminated GDP Light |
|---|---|---|---|
| Automatic Mode Pumps Off | Enabled | De-Energized | Enabled |
| Automatic Mode Pump(s) On | Closed | Energized | Closed |
| Flush Mode Pumps On | Closed | Energized | Closed |
| Flush Mode Pumps Off | Enabled | De-Energized | Enabled |
| Off Mode Pump(s) On | Closed | Energized | Closed |
| Off Mode Pumps Off | Enabled | De-Energized | Enabled |
| Test Mode Pump On | Closed | Energized | Closed |
| Test Mode Pump Off | Enabled | De-Energized | Enabled |
| Pantograph Flush Mode | Closed | Energized | Closed |

3.6.7.3 Backpressure Control Valve (BPCV)

The BPCV shall be connected to I/O-1, I/O-2 and UPS #3 as indicated on the Terminal Block Connection drawing. The graphical display enabled and closed lights and screen number 2 status shall activate based on the PLC's output status for the valve. The valve status shall be based on the table listed below.

Backpressure Control Valve Operation - One Solenoid

| Fueling Mode per PCP Selector Switch | Valve Action | Solenoid | Illuminated GDP Light |
|---|---|---|---|
| Automatic Mode Pump Start-up | Enabled | Energized | Enabled |
| Automatic Mode Prior to Lead Pump Shutoff | Closed | De-Energized | Closed |

| | | | |
|---|---|---|---|
| Flush Mode | Closed | De-Energized | Closed |
| Off Mode Pump(s) On | Enabled | Energized | Enabled |
| Off Mode Pumps Off | Closed | De-Energized | Closed |
| Test Mode Pump On | Enabled | Energized | Enabled |
| Test Mode Pump Off | Closed | De-Energized | Closed |
| Pantograph Test Mode | Closed | De-Energized | Closed |

3.6.7.4 Motor Operated Valve (MOV)

The MOV controller shall be connected to I/O-1 and I/O-2 and UPS #3 as indicated on the Terminal Block Connection drawing. The graphical display open and closed lights and screen number 2 and screen number 8 status shall activate based on the PLC's output status for the valve. The valve status shall be based on the table listed below.

| Motor Operated Valve (MOV) Operation | | |
|---|---|---|
| Fueling Mode Per PCP Selection Switch | Valve Action | Illuminated GDP Light |
| Automatic Mode Pumps Off | Closed | Closed |
| Automatic Mode Pump(s) On | Closed | Closed |
| Flush Mode Pumps On | Closed | Closed |
| Flush Mode Pumps Off | Closed | Closed |
| Off Mode Pump(s) On | Closed | Closed |
| Off Mode Pump(s) Off | Closed | Closed |
| Test Mode | Open | Open |
| Conclusion of Integrity Test | Closed | Closed |
| Pantograph Flush Mode | Open | Open |

3.6.7.5 Test Control Valve (TCV)

The TCV shall be connected to I/O-1 and I/O-2 and UPS #3 as indicated on the Terminal Block Connection drawing. The valve status shall be based on

the table listed below.

| Test Control Valve Operation - Two Solenoids | | | |
|---|---|---|---|
| Fueling Mode per PCP Selector Switch | Valve Action | Solenoid A | Solenoid B |
| Flush Mode | Closed | De-Energized | De-Energized |
| Automatic Mode Pump(s) On | Enabled | De-Energized | Energized |
| Off Mode | Closed | De-Energized | De-Energized |
| Test Mode Pump Off | Enabled | Energized | De-Energized |
| Pantograph Flush Mode | Enabled | De-Energized | Energized |

3.6.8 Safety Circuit

3.6.8.1 Emergency Stop Status

The emergency stop circuit status relay (ER1) N.O. contact shall be connected to I/O-1, I/O-2 and UPS #3 as indicated on the Terminal Block Connection drawing. When the circuit is activated the alarm annunciator's critical alarm sequence is activated and any calls to start fueling pumps shall be canceled and no additional pump start signals shall be sent until the circuit has been reset. The fueling pumps will actually be stopped by a emergency stop circuit status relay (ER2) N.O. contact in the fuel pump motor control circuit located in the motor control center.

3.6.8.2 Emergency Shutoff Valves (ESO) Status

The ESO status relay (ER2) N.O. contact shall be connected to I/O-1, I/O-2 and UPS #3 as indicated on the Terminal Block Connection drawing. When the relay is closed the GDP valve open lights shall light. When the relay is open the GDP valve closed lights shall light.

3.6.8.3 Circuit Power Status

The safety circuit power status relay (ER3) N.O. contact shall be connected to I/O-1, I/O-2 and UPS #3 as indicated on the Terminal Block Connection drawing. When the relay is closed the PCP emergency circuit power on light shall light.

3.6.9 Pump Control Panel

3.6.9.1 CPU Faults

The PCP mounted CPU-1 and CPU-2 on lights are connected to both SYS-1 and SYS-2. The associated CPU light shall light when no system faults are detected. When a fault is detected by the CPU or it's redundant CPU the faulted CPU's on light shall be turned off and the alarm annunciator's non-critical alarm sequence shall be activated.

3.6.9.2 Input Select Switch

The 2-position input select switch shall control which inputs (System-1 or System-2) are being used. Each switch position shall be connected to both SYS-1 and SYS-2. The OI display shall indicate the active system.

3.6.9.3 Mode Select Switch

The 5-position switch selects what mode of fueling is active: automatic, flush, test, pantograph flush or off. Each switch position shall be connected to both SYS-1 and SYS-2. The screen number 2 status shall indicate the active mode.

3.6.9.4 Lead Pump Selector Switch

The 5-position switch selects which pump shall be the lead pump. The switch position shall fix the starting sequence for all pumps. The sequences shall be 1-2-3-4-5, 2-3-4-5-1, 3-4-5-1-2, 4-5-1-2-3, and 5-1-2-3-4. The off sequence shall be the reverse of the start sequence, therefore, first on will be last off. A maximum of four pumps will be allowed to run at one time. If a pump fails to start or fails during operation, that pump will be disabled and the next pump in the sequence started. The screen number 2 status display shall indicate the lead pump.

3.6.9.5 PCP Temperature Alarm

The alarm thermostat when activated shall activate the alarm annunciator's non-critical alarm sequence.

3.6.9.6 Bulk Fuel Transfer Pump Controls

Individual illuminated "start" and non-illuminated "stop" pushbuttons shall be provided for the manual control of Bulk Fuel Transfer Pumps BFTP-1 and BFTP-2. Each pushbutton and the "on" illumination of the start pushbutton lamp shall be connected to both SYS-1 and SYS-2.

3.6.10 Bulk Tanks

3.6.10.1 Level Control

Each bulk tank has three level switches to measure low, high and high-high levels. The switches are DPDT for the redundancy and each pole shall be connected to both SYS-1 and SYS-2 as indicated on the Terminal Block Connection drawing.

a. Low Level

When the low level switch is activated the associated tank's graphic display low level light shall light. If the outlet valve is not fully closed the alarm annunciator's critical alarm sequence activates, transfer pumps shall be disabled and no pump shall be allowed to start via pushbutton control at the PCP. If all tanks are at low level, no transfer pumps shall start via pushbutton control at the PCP.

b. High Level

When the high level switch is activated and the associated tank's graphic display high level light shall light and the alarm annunciator's non-critical alarm sequence activates.

c. High-High Level

When the high-high level switch is activated the associated tank's graphic display high-high level light shall light, the alarm annunciator's critical alarm sequence activates, any transfer pump running shall be disabled and no pump shall be allowed to start via pushbutton control at the PCP.

3.6.10.2 Outlet Valve

Each bulk tank's outlet valve has a limit switch to indicate valve position. The switch is SPDT and shall be connected to both SYS-1 and SYS-2 as indicated on the Terminal Block Connection drawing. The switch shall close when the valve is fully closed. When the limit switch is closed the associated tank's valve graphic display closed light shall activate. When the limit switch is open, the associated tank's valve graphic display open light shall activate.

3.6.10.3 Inlet Valve

Each bulk tank's inlet valve has a limit switch to indicate valve position. The switch is SPDT and shall be connected to both SYS-1 and SYS-2 as indicated on the Terminal Block Connection drawing. The switch shall close when the valve is fully closed. When the limit switch is closed the associated tank's valve graphic display closed light shall activate. When the limit switch is open, the associated tank's valve graphic display open light shall activate.

Text

3.6.11 Flow Switch, Transfer Pump

On the discharge side of each pump is a flow switch to indicate positive flow (fail safe feature). The flow switch is DPDT for redundancy and each pole shall be connected to both SYS-1 and SYS-2 as indicated on the Terminal Block Connection drawing. if the PLC has given a signal to start a pump and the flow switch has not closed before the set point timer expires, or if the flow switch opens after the pump has been running, then the pump shall be in a failure state and it shall be disabled (taken out of the starting sequence), the alarm annunciator's non-critical alarm sequence shall also be activated, and the next pump in the start sequence started. After the PLC has stopped all of the pumps, any failed pump shall be added back into the start sequence.

3.7 OPERATING PROGRAM REQUIREMENTS

The control system's logic program shall be stored on a EEPROM chip. Default values of operator adjustable parameters shall be permanently stored on the chip with the capability of resetting the values in RAM to the values with in the range specified below. The default values can be changed through the use of the personal computer (after the correct password has been entered). After loss of power and battery failure the adjustable settings shall revert back to the default values located on the chip. The default values shown here shall be reset to the values determined during the system start up and test.

| SET POINT DESCRIPTION | SET POINT RANGE | DEFAULT VALUE |
|---|---|---|

| | | |
|---|---|---|
| Lead pump starting pressure | 30 to 150 psi | 60 psi |
| Issue flow to start second pump in sequence | 450 to 650 gpm | 560 gpm |
| Issue flow to start third pump in sequence | 1000 to 1300 gpm | 1160 gpm |
| Issue flow to start fourth pump in sequence | 1600 to 1900 gpm | 1760 gpm |
| Return flow to enable next pump in sequence to start | 10 to 100 gpm | 40 gpm |
| Return flow to stop fourth, third, and second pump in sequence (lag pump) | 500 to 800 gpm | 700 gpm |
| Return flow to initiate lead pump shutdown sequence | 500 to 800 gpm | 560 gpm |
| Timer to enable start-up of lead pump | 0 to 120 seconds | 0 seconds |
| Timer to enable second, third, and fourth pumps to start | 0 to 120 seconds | 10 seconds |
| Timer to stop fourth, third, and second pumps | 0 to 120 seconds | 15 seconds |
| Timer to stop first pump | 0 to 60 seconds | 2 seconds |
| Timer to de-energize (close) Back Pressure Control Valve | 0 to 360 seconds | 300 seconds |
| Timer to enable Defuel/Flush Valve after Pump Shutdown | 0 to 60 seconds | 30 seconds |
| Timer to establish fueling pump failure | 5 to 30 seconds | 15 seconds |
| System pressure to stop lead pump | 130 to 190 psig | 140 psig |
| Pressure Test Set Point (Closes MOV) | 100 to 180 psi | 120 psi |
| Timer to Shut Down Pump During Pressure Test (Once MOV Closes) | 0 to 120 seconds | 15 seconds |
| Timer to establish transfer pump failure | 5 to 30 seconds | 15 seconds xxx seconds |

Should the operator enter a value not within the range for that parameter, the personal computer shall indicate "INVALID ENTRY" and revert back to the previous value.

3.8 AUTOMATIC MODE - IDLE CONDITION

The fueling system is intended to remain continuously pressurized while in the idle condition. This allows the system to respond immediately to aircraft refueling and defueling requirements. Periodically, in the idle condition, the system will lose minimal pressure. When this occurs, the control system will automatically repressurize in the following sequence:

a. The lead pump will start when the system pressure is less than <60> psig continuously for <0> seconds. If the pressure then rises above <60> psig before the timer expires, the timer shall reset.

b. After the timer expires:

(1) The BPCV solenoid shall be energized to enable the valve to modulate the system pressure at it's set point.

(2) The PCV solenoid shall be energized to close the valve.

(3) The D/FV solenoid 'A' shall be de-energized so the valve is closed and solenoid 'B' shall be de-energized.

c. With the lead pump running, "600 gpm will flow through the issue venturi. The system pressure upstream of the BPCV will increase to the BPCV set point of 130 psig. At this pressure the BPCV will start to open and the valve will modulate as required to pass sufficient flow through the return venturi to maintain pressure upstream of the valve.

d. With the lead pump running and no fueling demand the return venturi flow rate will equal the issue venturi flow rate. When the return venturi flow rate is greater than <560> gpm a <300> second timer shall start. If the flow rate drops below <560> before the timer expires, the timer shall reset, and no changes shall be made to the pump and valve status.

e. After the timer expires:

(1) The BPCV solenoid shall be de-energized to close the valve.

(2) Simultaneous with the clcosure of the BPCV, the PCV solenoid shall be de-energized and bleed system pressure to 75 psig once the lead pump stops.

(3) When system pressure rises to 140 psig a <2> second timer shall start. After the timer has expired, the lead pump shall be stopped.

(4) The Defuel/Flush valve solenoid "A" shall be energized to enable the valve to bleed system pressure to 85 psig 30 seconds after the lead pump shuts down.

f. The system has now returned to a pressurized and idle condition.

g. When a fueling pump is called to start, a 15 second timer shall start. If the timer expires before the flow switch closes the pump shall be called off, the alarm annunciator's associated non-critical alarm sequence shall activate and the next pump in the sequence shall be called to start.

h. If a fueling pumps flow switch opens after the pump has successfully started the pump shall be called off, the alarm annunciator's associated non-critical alarm sequence shall activate and the next pump in the

sequence shall be called to start.

3.9 AUTOMATIC MODE - REFUELING CONDITION

To start an aircraft fueling operation, an operator connects fueling equipment such as a hydrant hose truck to an aircraft and to a hydrant control valve. When the operator opens the hydrant control valve by use of an air operated "Deadman", the following sequence occurs:

a. The lead pump will start when the PIT senses a pressure less than <60> psig continuously for <0> seconds. If the pressure then rises above <60> psig before the timer expires, the timer shall reset.

b. After the timer expires:

(1) The BPCV solenoid shall be energized to enable the valve to modulate the system pressure at it's set point.

(2) The PCV solenoid shall be energized to close the valve.

(3) The D/FV solenoid 'A' shall be de-energized so the valve is closed and solenoid 'B' shall be de-energized.

c. With the lead pump running, ±600 gpm will flow through the issue venturi. The system pressure upstream of the BPCV will increase to the BPCV set point of 130 psig. At this pressure the BPCV will start to open and the valve will modulate as required to pass sufficient flow through the return venturi to maintain pressure upstream of the valve.

d. With lead pump running and a issue venturi flow rate greater than <560> gpm and a return venturi flow rate greater than <40> gpm and less than <560> gpm the lead pump will continue to run and the BPCV will modulate to pass flow as necessary to maintain upstream system pressure.

e. With the lead pump running and a issue venturi flow rate greater than <560> gpm and a return venturi flow rate greater than <560> gpm a <60> second timer shall start. If issue venturi flow rate falls below <560> gpm or the return venturi flow rate falls below <560> before the timer expires, the timer shall reset, and no changes shall be made to the pump and valve status.

f. After the timer expires:

(1) The BPCV solenoid shall be de-energized to close the valve.

(2) Simultaneous with the closure of the BPCV, the PCV solenoid shall be de-energized and bleed system pressureto 75 psig once the lead pump stops.

(3) When system pressure rises to 140 psig a <2> second timer shall start. After the timer has expired, the lead pump shall be stopped.

(4) The Defuel/Flush valve solenoid "A" adjustable timer shall be energized to enable the valve to bleed system pressure to 85 psig 30 seconds after the pump shuts down.

g. With the lead pump running and a issue venturi flow rate greater than <560> gpm and a return venturi flow rate less than <40> gpm a <10> second timer shall start. If the issue venturi flow rate falls below <560>

gpm or the return venturi flow rate rises above <40> gpm before the timer expires, the timer shall reset, and no changes shall be made to the pump and valve status.

h. After the timer expires: The second pump shall start.

i. With the lead and second pumps running and a issue venturi flow rate greater than <1160> gpm and a return venturi flow rate of greater than <40> gpm and less than <700> gpm the lead and second pumps shall continue to run and the BPCV shall modulate as necessary to maintain system pressure.

j. With the lead and second pumps running and a issue venturi flow rate greater than <1160> gpm and a return venturi flow rate greater than <700> gpm a <15> second timer shall start. If issue venturi flow rate falls below <1160> gpm or the return venturi flow rate falls below <700> gpm before the timer expires, the timer shall reset and no changes shall be made to the pump and valve status.

k. After the timer expires: The second pump shall be stopped.

l. With the lead and second pump running and a issue venturi flow rate greater than <1160> gpm and a return venturi flow rate less than <40> gpm a <10> second timer shall start. If the issue venturi flow rate falls below <1160> gpm or the return venturi flow rate rises above <40> gpm before the timer expires, the timer shall reset, and no changes shall be made to the pump and valve status.

m. After the timer expires: The third pump shall start.

n. With the lead, second and third pumps running and a issue venturi flow rate greater than <1760> gpm and a return venturi flow rate of greater than <40> gpm and less than <700> gpm the lead, second and third pumps shall continue to run and the BPCV shall modulate as necessary to maintain system pressure.

o. With the lead, second and third pumps running and issue venturi flow rate greater than <1760> gpm and a return venturi flow rate greater than <700> gpm a <15> second timer shall start. If the issue venturi flow rate falls below <1760> gpm or the return venturi flow rate falls below <700> gpm before the timer expires, the timer shall reset and no changes shall be made to the pump and valve status.

p. After the timer expires: The third pump shall be stopped.

q. With the lead, second and third pumps running and a issue venturi flow rate greater than <1760> gpm and a return venturi flow rate less than <40> gpm a <10> second timer shall start. If the issue venturi flow rate falls below <1760> gpm or the return venturi flow rate rises above <40> gpm before the timer expires, the timer shall reset, and no changes shall be made to the pump and valve status.

r. After the timer expires: The fourth pump shall start.

s. With the lead, second, third and fourth pumps running and a issue venturi flow rate greater than 2360 gpm and a return venturi flow rate of greater than <40> gpm and less than <700> gpm the lead, second, third and fourth pumps shall continue to run and the BPCV shall modulate as necessary to maintain system pressure.

t. With the lead, second, third and fourth pumps running and a issue venturi flow rate greater than 2360 gpm and a return venturi flow rate greater than <700> gpm a <15> second timer shall start. If the issue venturi flow rate falls below 2360 gpm or the return venturi flow rate falls below <700> gpm before the timer expires, the timer shall reset and no changes shall be made to the pump and valve status.

u. After the timer expires: The fourth pump shall be stopped.

v. When a fueling pump is called to start, a 15 second timer shall start. If the timer expires before the flow switch closes the pump shall be called off, the alarm annunciator's associated non-critical alarm sequence shall activate and the next pump in the sequence shall be called to start.

w. If a fueling pumps flow switch opens after the pump successfully started the pump shall be called off, the alarm annunciator's associated non-critical alarm sequence shall activate and the next pump in the sequence shall be called to start.

## 3.10 AUTOMATIC MODE - DEFUELING CONDITION

To start an aircraft defuel operation, an operator connects a hydrant hose truck to an aircraft and a fuel sense line and an air sense line to the hydrant control valve. The hydrant hose truck has an on-board defuel pump capable of delivering 300 gpm at 165 psig. When the operator starts the defuel operation one of the following occurs:

a. If the fueling pumps are running (D/FV closed) the fuel being removed from the aircraft will either go to the other aircraft(s) connected to the system or be returned to the pumphouse where the BPCV will modulate to control system pressure and the fuel will be returned to the operating tanks. The return venturi flow rate will control the number of pumps that are on as discussed in paragraph "AUTOMATIC MODE - FUELING CONDITION".

b. If the fueling pumps are off (D/FV enabled) the fuel being removed from the aircraft will be returned to the pumphouse and both the D/FV and the PCV will modulate to return the fuel to the operating tanks.

## 3.11 FLUSH MODE

This mode shall be used when the system need to be flushed of water or sediment. The operators shall first place the manual valve in the desired position to select the appropriate flow path. Placing the selector switch in "flush" the following shall occur:

a. The BPCV solenoid shall be de-energized to force it closed.

b. The D/FV solenoid 'A' shall be de-energized to allow the valve to open and the D/FV solenoid 'B' shall be energized to force it open.

c. Start the fueling pump(s) manually using the Hand-Off-Auto or Hand-Auto switch to obtain the desired flow rate. The automatic pump starts shall be disabled in this mode.

d. The PCV solenoid shall be energized when pump(s) are on and de-energized when the pumps are off.

e. When a fueling pump is started, a 15 second timer shall start. If the timer expires before the flow switch closes the alarm annunciator's

associated non-critical alarm sequence shall activate.

f. If a fueling pumps flow switch opens after the pump successfully started the alarm annunciator's associated non-critical alarm sequence shall activate.

3.12 OFF MODE

a. Automatic starting of fueling pumps shall be disabled. All other functions (GDP, alarm annunciator, operator interface, control valve solenoids, etc.) shall be active to allow manual control of the fueling pumps using the Hand-Off-Auto or Hand-Auto switch.

b. When the first pump has been started:

(1) The BPCV solenoid shall be energized to enable the valve to modulate the system pressure at it's set point.

(2) The PCV solenoid shall be energized to close the valve.

(3) The D/FV solenoid 'A' shall be de-energized so the valve is closed and solenoid 'B' shall be de-energized.

c. The second, third and fourth pumps may be started or stopped manually as needed by the operator.

d. After the last pump has been stopped:

(1) The BPCV solenoid shall be de-energized.

(2) The PCV solenoid shall be de-energized.

(3) The D/FV solenoid 'A' shall be energized and D/FV solenoid 'B' shall be de-energized.

3.13 MANUAL OPERATION OF FUELING PUMPS

a. If the PLC system is still active see Paragraph "OFF MODE".

b. If the PLC system has no power or both CPUs have faulted (CPU lights on PCP off) the pumping system will be in a completely manual mode. The safety circuit will need power so that the ESO solenoids on the non-surge check valves will be open and fuel can flow. The solenoids on the other solenoid controlled valves will be de-energized so the valves will have to be manually opened or enabled for the system to run. Other valves may need to be opened or closed manually by the operators for the system to work properly.

3.14 PRESSURE TEST

This mode shall be used on a regular, scheduled basis to verify and document the hydrant fuel system pressure tightness and integrity. The operators shall first close the manual valves I25 and I26 and shall open valve I27.

a. By placing the mode selector switch in the "TEST" position, the following shall occur:

(1) The selected lead pump shall start.

(2) The BPCV solenoid shall energize to enable the valve.

(3) The D/FV solenoids "A" and "B" shall energize to hold the D/FV closed.

(4) The PCV solenoid shall be energized to hold the PCV closed.
(5) The Test Control Valve (TCV) solenoid "A" is energized to enable the valve.

b. The motor operated valve (MOV) then opens allowing the system to presurize. Once the pump has run for sufficient time to charge the system to the test pressure (as sensed by PIT-L1 and PIT-L2) the MOV closes. Upon sensing that the MOV is closed, a signal (after specified timer) is sent to shut down the pump using the automatic mode lead pump shutdown sequence.

c. The pressure test is recorded by the PLC and PC's with the system pressures (as sensed by PIT-L1 and PIT-L2) and system product temperature (as sensed by TIT-1) being recorded versus time. All logged data will be displayable on the PC. The data logging system/software shall log every second until pump shutdown, then data will be logged every minute.

d. Following the test procedures and the recording of the pressure/temperature data, the operator opens valves I25 and I26 and closes valve 127, then the operator places the mode selector switch in "AUTO" at which time the data ceases to log. A timed, dated report will be automatically stored on the PC.

e. If, at the end of the test, the operator wants a hard copy of the test, the operator shall print it out on the color laser printer via the PC.

3.15 4-VALVE MANIFOLD SUPERVISION

Prior to initiating fueling operations in the automatic or in test mode, the 4-valve manifold and tank receiving selection valves must be in the proper position to enable fueling operations. The PLC shall monitor valve position of the four valve manifold (sensed by position limit switches for fully opened and fully closed status on valves I34, I35, R10 and R11) and by monitoring valve status on the operating tank outlet valves I1 and I2 (as sensed by position switches indicating full opened or closed). Valve position must conform to the position table listed on drawing M3.11 under "Storage Tank Selection."

a. If in automatic mode, a pump is called on to start, then the valve selection must conform to the position table on sheet M3.11. If the valve positions do not conform to this table, then the lead pump shall fail and no successive pumps shall attempt to start. A pump fail alarm shall be annunciated at the PCP as well as a "4-VALVE MANIFOLD/TANK SETUP ERROR."

b. The operator must then correct the setup error and reset the system (PCP) to clear the alarms.

c. The 4 valve manifold control bypass keyswitch at the PCP shall lockout all interlock features contained in paragraph 3.15 and shall allow fuel pumps to run regardless of valve position.

3.16 PANTOGRAPH FLUSH MODE

Prior to flushing pantographs, the operator manually sets the fuel system

up for pantograph flush per the Sequence of Operation on sheet M3.1.2.

a. The operator then places the System Mode Selector switch at the PCP in the Pantograph Flush Mode. This allows the fuel system to respond automatically to the deadman control on the pantograph. When system pressure, as sensed by PIT-1 or PIT-2, drops below the set point of 60 psig, the control system starts only the lead pump. Control signals are then initiated by the PCP for the following:

(1) The Back Pressure Control Valve (BPCV) solenoid will be de-energized locking the BPCV closed.

(2) The Defuel/Flush Valve (D/FV) solenoid "B" will be energized to enable the D/FV to open.

(3) The Pressure Control Valve (PCV) solenoid shall be energized to close the valve.

(4) The motor operated valve (MOV), if closed, now opens.

(5) The Testing Control Valve (TCV) solenoid "B" will be energized to enable the valve.

b. Upon closure of the pantograph deadman control, the system pressure will immediately begin to rise to the lead pump's shutoff head. When system pressure rises to 150 psig, as sensed by PIT-1 or PIT-2, the lead pump will be shut down via the automatic mode lead pump shutdown sequence.

c. Once the pantograph flushing is complete, the operator shall manually place the fuel system back into normal condition for automatic fueling. See Sequence of Operation on sheet M3.11.

d. The operator then places the system back into Automatic Mode at the PCP. This action leaves the MOV open, leaves the TCV enable via solenoid "B" and starts the lead pump.

e. At this point, the fuel system has returned to a pressurized, idel condition.

-- End of Section --

SECTION TABLE OF CONTENTS

DIVISION 15 - MECHANICAL

SECTION 15990A

TESTING, ADJUSTING, AND BALANCING OF HVAC SYSTEMS

**04/03**

PART 1 GENERAL

1.1 REFERENCES
1.2 SUBMITTALS
1.3 SIMILAR TERMS
1.4 TAB STANDARD
1.5 QUALIFICATIONS
1.5.1 TAB Firm
1.5.2 TAB Specialist
1.6 TAB SPECIALIST RESPONSIBILITIES

PART 2 PRODUCTS (Not Applicable)

PART 3 EXECUTION

3.1 DESIGN REVIEW
3.2 TAB RELATED HVAC SUBMITTALS
3.3 TAB SCHEMATIC DRAWINGS AND REPORT FORMS
3.4 DUCTWORK LEAK TESTING
3.5 TESTING, ADJUSTING, AND BALANCING
3.5.1 TAB Procedures
3.5.2 Systems Readiness Check
3.5.3 Preparation of TAB Report
3.5.4 TAB Verification
3.5.5 Marking of Setting
3.5.6 Identification of Test Ports

-- End of Section Table of Contents --

SECTION 15990A

TESTING, ADJUSTING, AND BALANCING OF HVAC SYSTEMS
**04/03**

PART 1 GENERAL

1.1 REFERENCES

The publications listed below form a part of this specification to the extent referenced. The publications are referred to within the text by the basic designation only.

ASSOCIATED AIR BALANCE COUNCIL (AABC)

| | |
|---|---|
| AABC MN-1 | (2002) National Standards for Total System Balance |

NATIONAL ENVIRONMENTAL BALANCING BUREAU (NEBB)

| | |
|---|---|
| NEBB TABES | (1998) Procedural Standards for Testing, Adjusting, Balancing of Environmental Systems |

SHEET METAL & AIR CONDITIONING CONTRACTORS' NATIONAL ASSOCIATION (SMACNA)

| | |
|---|---|
| SMACNA TAB HVAC Sys | (2002) HVAC Systems - Testing, Adjusting and Balancing |

1.2 SUBMITTALS

Government approval is required for submittals with a "G" designation; submittals not having a "G" designation are for information only or as otherwise deignated. When used, a designation following the "G" designation identifies the office that will review the submittal for the Government. The following shall be submitted in accordance with Section 01330 SUBMITTAL PROCEDURES:

SD-02 Shop Drawings

TAB Schematic Drawings and Report Forms; G-AO

Three copies of the TAB Schematic Drawings and Report Forms, no later than 21 days prior to the start of TAB field measurements.

SD-03 Product Data

TAB Related HVAC Submittals; G-AO

A list of the TAB Related HVAC Submittals, no later than 7 days after the approval of the TAB Specialist.

TAB Procedures; G

Proposed procedures for TAB, submitted with the TAB Schematic

Drawings and Report Forms.

Calibration; G-AO

List of each instrument to be used during TAB, stating calibration requirements required or recommended by both the TAB Standard and the instrument manufacturer and the actual calibration history of the instrument, submitted with the TAB Procedures. The calibration history shall include dates calibrated, the qualifications of the calibration laboratory, and the calibration procedures used.

Systems Readiness Check; G-AO

Proposed date and time to begin the Systems Readiness Check, no later than 7 days prior to the start of the Systems Readiness Check.

TAB Execution; G-AO

Proposed date and time to begin field measurements, making adjustments, etc., for the TAB Report, submitted with the Systems Readiness Check Report.

TAB Verification; G

Proposed date and time to begin the TAB Verification, submitted with the TAB Report.

SD-06 Test Reports

Design Review Report; G

A copy of the Design Review Report, no later than 14 days after approval of the TAB Firm and the TAB Specialist.

Systems Readiness Check; G

A copy of completed checklists for each system, each signed by the TAB Specialist, at least 7 days prior to the start of TAB Execution. All items in the Systems Readiness Check Report shall be signed by the TAB Specialist and shall bear the seal of the Professional Society or National Association used as the TAB Standard.

TAB Report; G-AO

Three copies of the completed TAB Reports, no later that 7 days after the execution of TAB. All items in the TAB Report shall be signed by the TAB Specialist and shall bear the seal of the Professional Society or National Association used as the TAB Standard.

TAB Verification Report; G

Three copies of the completed TAB Verification Report, no later that 7 days after the execution of TAB Verification. All items in the TAB Verification Report shall be signed by the TAB Specialist and shall bear the seal of the Professional Society or National

Association used as the TAB Standard.

SD-07 Certificates

Ductwork Leak Testing

A written statement signed by the TAB Specialist certifying that the TAB Specialist witnessed the Ductwork Leak Testing, it was successfully completed, and that there are no known deficiencies related to the ductwork installation that will prevent TAB from producing satisfactory results.

TAB Firm; G

Certification of the proposed TAB Firm's qualifications by either AABC, NEBB, or TABB to perform the duties specified herein and in other related Sections, no later than 21 days after the Notice to Proceed. The documentation shall include the date that the Certification was initially granted and the date that the current Certification expires. Any lapses in Certification of the proposed TAB Firm or disciplinary action taken by AABC or NEBB against the proposed TAB Firm shall be described in detail.

TAB Specialist; G

Certification of the proposed TAB Specialist's qualifications by either AABC, NEBB, or TABB to perform the duties specified herein and in other related Sections, no later than 21 days after the Notice to Proceed. The documentation shall include the date that the Certification was initially granted and the date that the current Certification expires. Any lapses in Certification of the proposed TAB Specialist or disciplinary action taken by AABC or NEBB against the proposed TAB Specialist shall be described in detail.

## 1.3 SIMILAR TERMS

In some instances, terminology differs between the Contract and the TAB Standard primarily because the intent of this Section is to use the industry standards specified, along with additional requirements listed herein to produce optimal results. The following table of similar terms is provided for clarification only. Contract requirements take precedent over the corresponding AABC or NEBB requirements where differences exist.

SIMILAR TERMS

| Contract Term | AABC Term | NEBB Term | TABB Term |
|---|---|---|---|
| TAB Standard | National Standards for Testing and Balancing Heating, Ventilating, and Air Conditioning Systems | Procedural Standards for Testing, Adjusting, and Balancing of Environmental Systems. | SMACNA's Procedures |
| TAB Specialist | TAB Engineer | TAB Supervisor | TAB Supervisor |
| Systems | Construction Phase | Field Readiness | Field |

SIMILAR TERMS

| | | | |
|---|---|---|---|
| Readiness Check | Inspection | Check & Preliminary Field Procedures. | Readiness Check & Prelim. Field Procedures |

1.4 TAB STANDARD

TAB shall be performed in accordance with the requirements of the standard under which the TAB Firm's qualifications are approved, i.e., AABC MN-1, NEBB TABES, or SMACNA TAB HVAC Sys unless otherwise specified herein. All recommendations and suggested practices contained in the TAB Standard shall be considered mandatory. The provisions of the TAB Standard, including checklists, report forms, etc., shall, as nearly as practical, be used to satisfy the Contract requirements. The TAB Standard shall be used for all aspects of TAB, including qualifications for the TAB Firm and Specialist and calibration of TAB instruments. Where the instrument manufacturer calibration recommendations are more stringent than those listed in the TAB Standard, the manufacturer's recommendations shall be adhered to. All quality assurance provisions of the TAB Standard such as performance guarantees shall be part of this contract. For systems or system components not covered in the TAB Standard, TAB procedures shall be developed by the TAB Specialist. Where new procedures, requirements, etc., applicable to the Contract requirements have been published or adopted by the body responsible for the TAB Standard used (AABC, NEBB, or TABB), the requirements and recommendations contained in these procedures and requirements shall be considered mandatory.

1.5 QUALIFICATIONS

1.5.1 TAB Firm

The TAB Firm shall be either a member of AABC or certified by the NEBB and certified in all categories and functions where measurements or performance are specified on the plans and specifications. The certification shall be maintained for the entire duration of duties specified herein. If, for any reason, the firm loses subject certification during this period, the Contractor shall immediately notify the Contracting Officer and submit another TAB Firm for approval. Any firm that has been the subject of disciplinary action by either the AABC, the NEBB, or the TABB within the five years preceding Contract Award shall not be eligible to perform any duties related to the HVAC systems, including TAB. All work specified in this Section and in other related Sections to be performed by the TAB Firm shall be considered invalid if the TAB Firm loses its certification prior to Contract completion and must be performed by an approved successor. These TAB services are to assist the prime Contractor in performing the quality oversight for which it is responsible. The TAB Firm shall be a subcontractor of the prime Contractor and shall be financially and corporately independent of the mechanical subcontractor, and shall report to and be paid by the prime Contractor.

1.5.2 TAB Specialist

The TAB Specialist shall be either a member of AABC,an experienced technician of the Firm certified by the NEBB, or a Supervisor certified by the TABB. The certification shall be maintained for the entire duration of duties specified herein. If, for any reason, the Specialist loses subject

certification during this period, the Contractor shall immediately notify the Contracting Officer and submit another TAB Specialist for approval. Any individual that has been the subject of disciplinary action by either the AABC, the NEBB, or the TABB within the five years preceding Contract Award shall not be eligible to perform any duties related to the HVAC systems, including TAB. All work specified in this Section and in other related Sections performed by the TAB Specialist shall be considered invalid if the TAB Specialist loses its certification prior to Contract completion and must be performed by the approved successor.

1.6 TAB SPECIALIST RESPONSIBILITIES

All TAB work specified herein and in related sections shall be performed under the direct guidance of the TAB Specialist.

PART 2 PRODUCTS (Not Applicable)

PART 3 EXECUTION

3.1 DESIGN REVIEW

The TAB Specialist shall review the Contract Plans and Specifications and advise the Contracting Officer of any deficiencies that would prevent the HVAC systems from effectively operating in accordance with the sequence of operation specified or prevent the effective and accurate TAB of the system. The TAB Specialist shall provide a Design Review Report individually listing each deficiency and the corresponding proposed corrective action necessary for proper system operation.

3.2 TAB RELATED HVAC SUBMITTALS

The TAB Specialist shall prepare a list of the submittals from the Contract Submittal Register that relate to the successful accomplishment of all HVAC TAB. The submittals identified on this list shall be accompanied by a letter of approval signed and dated by the TAB Specialist when submitted to the Government. The TAB Specialist shall also ensure that the location and details of ports, terminals, connections, etc., necessary to perform TAB are identified on the submittals.

3.3 TAB SCHEMATIC DRAWINGS AND REPORT FORMS

A schematic drawing showing each system component, including balancing devices, shall be provided for each system. Each drawing shall be accompanied by a copy of all report forms required by the TAB Standard used for that system. Where applicable, the acceptable range of operation or appropriate setting for each component shall be included on the forms or as an attachment to the forms. The schematic drawings shall identify all testing points and cross reference these points to the report forms and procedures.

3.4 DUCTWORK LEAK TESTING

The TAB Specialist shall witness the Ductwork Leak Testing specified in Section 15895 AIR SUPPLY, DISTRIBUTION, VENTILATION, AND EXHAUST SYSTEM and approve the results as specified in Paragraph TAB RELATED HVAC SUBMITTALS.

## 3.5 TESTING, ADJUSTING, AND BALANCING

### 3.5.1 TAB Procedures

Step by step procedures for each measurement required during TAB Execution shall be provided. The procedures shall be oriented such that there is a separate section for each system. The procedures shall include measures to ensure that each system performs as specified in all operating modes, interactions with other components (such as exhaust fans, kitchen hoods, fume hoods, relief vents, etc.) and systems, and with all seasonal operating differences, diversity, simulated loads, and pressure relationships required.

### 3.5.2 Systems Readiness Check

The TAB Specialist shall inspect each system to ensure that it is complete, including installation and operation of controls, and that all aspects of the facility that have any bearing on the HVAC systems, including installation of ceilings, walls, windows, doors, and partitions, are complete to the extent that TAB results will not be affected by any detail or touch-up work remaining. The TAB Specialist shall also verify that all items such as ductwork and piping ports, terminals, connections, etc., necessary to perform TAB shall be complete during the Systems Readiness Check.

### 3.5.3 Preparation of TAB Report

Preparation of the TAB Report shall begin only when the Systems Readiness Report has been approved. The Report shall be oriented so that there is a separate section for each system. The Report shall include a copy of the appropriate approved Schematic Drawings and TAB Related Submittals, such as pump curves, fan curves, etc., along with the completed report forms for each system. The operating points measured during successful TAB Execution and the theoretical operating points listed in the approved submittals shall be marked on the performance curves and tables. Where possible, adjustments shall be made using an "industry standard" technique which would result in the greatest energy savings, such as adjusting the speed of a fan instead of throttling the flow. Any deficiencies outside of the realm of normal adjustments and balancing during TAB Execution shall be noted along with a description of corrective action performed to bring the measurement into the specified range. If, for any reason, the TAB Specialist determines during TAB Execution that any Contract requirement cannot be met, the TAB Specialist shall immediately provide a written description of the deficiency and the corresponding proposed corrective action necessary for proper system operation to the Contracting Officer.

### 3.5.4 TAB Verification

The TAB Specialist shall recheck ten percent of the measurements listed in the Tab Report and prepare a TAB Verification Report. The measurements selected for verification and the individuals that witness the verification will be selected by the Contracting Officer's Representative (COR). The measurements will be recorded in the same manner as required for the TAB Report. All measurements that fall outside the acceptable operating range specified shall be accompanied by an explanation as to why the measurement does not correlate with that listed in the TAB Report and a description of corrective action performed to bring the measurement into the specified range. The TAB Specialist shall update the original TAB report to reflect any changes or differences noted in the TAB verification report and submit

the updated TAB report. If over 20 percent of the measurements selected by the COR for verification fall outside of the acceptable operating range specified, the COR will select an additional ten percent for verification. If over 20 percent of the total tested (including both test groups) fall outside of the acceptable range, the TAB Report shall be considered invalid and all contract TAB work shall be repeated beginning with the Systems Readiness Check.

3.5.5 Marking of Setting

Following approval of TAB Verification Report, the setting of all HVAC adjustment devices including valves, splitters, and dampers shall be permanently marked by the TAB Specialist so that adjustment can be restored if disturbed at any time.

3.5.6 Identification of Test Ports

The TAB Specialist shall permanently and legibly identify the location points of duct test ports. If the ductwork has exterior insulation, the identification shall be made on the exterior side of the insulation. All penetrations through ductwork and ductwork insulation shall be sealed to prevent air leakage or to maintain integrity of vapor barrier.

-- End of Section --

SECTION TABLE OF CONTENTS

DIVISION 16 - ELECTRICAL

SECTION 16070A

SEISMIC PROTECTION FOR ELECTRICAL EQUIPMENT

**04/99**

PART 1 GENERAL

1.1 REFERENCES
1.2 SUBMITTALS
1.3 SYSTEM DESCRIPTION
1.3.1 Electrical Equipment
1.3.2 Electrical Systems
1.3.3 Contractor Designed Bracing
1.3.4 Conduits Requiring No Special Seismic Restraints

PART 2 PRODUCTS

2.1 LIGHTING FIXTURE SUPPORTS

PART 3 EXECUTION

3.1 LIGHTING FIXTURES IN BUILDINGS
3.1.1 Pendant Fixtures
3.1.2 Ceiling Attached Fixtures
3.1.2.1 Recessed Fluorescent Fixtures
3.1.2.2 Surface-Mounted Fluorescent Fixtures
3.1.3 Assembly Mounted on Outlet Box
3.1.4 Wall-Mounted Emergency Light Unit

-- End of Section Table of Contents --

SECTION 16070A

SEISMIC PROTECTION FOR ELECTRICAL EQUIPMENT
**04/99**

PART 1 GENERAL

1.1 REFERENCES

The publications listed below form a part of this specification to the extent referenced. The publications are referred to in the text by basic designation only.

AMERICAN SOCIETY FOR TESTING AND MATERIALS (ASTM)

| | |
|---|---|
| ASTM E 580 | (2000) Application of Ceiling Suspension Systems for Acoustical Tile and Lay-In Panels in Areas Requiring Moderate Seismic Restraint |

U.S. ARMY CORPS OF ENGINEERS (USACE)

| | |
|---|---|
| TI 809-04 | (1998) Seismic Design for Buildings |

UNDERWRITERS LABORATORIES (UL)

| | |
|---|---|
| UL 1570 | (1995; Rev thru Nov 1999) Fluorescent Lighting Fixtures |
| UL 1571 | (1995; Rev thru Nov 1999) Incandescent Lighting Fixtures |

1.2 SUBMITTALS

Government approval is required for submittals with a "G" designation; submittals not having a "G" designation are for information only. When used, a designation following the "G" designation identifies the office that will review the submittal for the Government. The following shall be submitted in accordance with Section 01330 SUBMITTAL PROCEDURES:

SD-02 Shop Drawings

Lighting Fixtures in Buildings;

Detail drawings along with catalog cuts, templates, and erection and installation details, as appropriate, for the items listed. Submittals shall be complete in detail; shall indicate thickness, type, grade, class of metal, and dimensions; and shall show construction details, reinforcement, anchorage, and installation with relation to the building construction.

SD-03 Product Data

Lighting Fixtures in Buildings; G

Copies of the design calculations with the detail drawings. Calculations shall be stamped by a registered engineer and shall verify the capability of structural members to which bracing is attached for carrying the load from the brace.

Contractor Designed Bracing; G

Copies of the Design Calculations with the Drawings. Calculations shall be approved, certified, stamped and signed by a Registered Professional Engineer. Calculations shall verify the capability of structural members to which bracing is attached for carrying the load from the brace.

## 1.3 SYSTEM DESCRIPTION

### 1.3.1 Electrical Equipment

Electrical equipment shall include the following items to the extent required on the drawings or in other sections of these specifications:

Control Panels
Pumps with Motors
Light Fixtures
Motor Control Centers
Switchboards (Floor Mounted)

### 1.3.2 Electrical Systems

The following electrical systems shall be installed as required on the drawings and other sections of these specifications and shall be seismically protected in accordance with this specification:

### 1.3.3 Contractor Designed Bracing

The Contractor shall design the bracing in accordance with TI 809-04 and additional data furnished by the Contracting Officer. Resistance to lateral forces induced by earthquakes shall be accomplished without consideration of friction resulting from gravity loads. TI 809-04 uses parameters for the building, not for the equipment in the building; therefore, corresponding adjustments to the formulas shall be required. Loadings determined using TI 809-04 are based on strength design; therefore, the AISC LRFP specifications shall be used for the design. The bracing for the following electrical equipment and systems shall be developed by the Contractor: .

### 1.3.4 Conduits Requiring No Special Seismic Restraints

Seismic restraints may be omitted from electrical conduit less than 2-1/2 inches trade size. All other interior conduit, shall be seismically protected as specified.

# PART 2 PRODUCTS

## 2.1 LIGHTING FIXTURE SUPPORTS

Lighting fixtures and supports shall conform to UL 1570 or UL 1571 as applicable.

PART 3 EXECUTION

3.1 LIGHTING FIXTURES IN BUILDINGS

Lighting fixtures and supports shall conform to the following:

3.1.1 Pendant Fixtures

Pendant fixtures shall conform to the requirements of TI 809-04, Chapter 10.

3.1.2 Ceiling Attached Fixtures

3.1.2.1 Recessed Fluorescent Fixtures

Recessed fluorescent individual or continuous-row mounted fixtures shall be supported by a seismic-resistant suspended ceiling support system built in accordance with Section 09510 ACOUSTICAL CEILINGS. Seismic protection for the fixtures shall conform to the requirements of TI 809-04, Chapter 10. Recessed lighting fixtures not over 56 pounds in weight may be supported by and attached directly to the ceiling system runners using screws or bolts, number and size as required by the seismic design. Fixture accessories, including louvers, diffusers, and lenses shall have lock or screw attachments.

3.1.2.2 Surface-Mounted Fluorescent Fixtures

Surface-mounted fluorescent individual or continuous-row fixtures shall be attached to a seismic-resistant ceiling support system built in accordance with ASTM E 580 . Seismic protection for the fixtures shall conform to the requirements of TI 809-04, Chapter 10.

3.1.3 Assembly Mounted on Outlet Box

A supporting assembly, that is intended to be mounted on an outlet box, shall be designed to accommodate mounting features on 4 inch boxes, plaster rings, and fixture studs.

3.1.4 Wall-Mounted Emergency Light Unit

Attachments for wall-mounted emergency light units shall be designed and secured for the worst expected seismic disturbance at the site.

-- End of Section --

SECTION TABLE OF CONTENTS

DIVISION 16 - ELECTRICAL

SECTION 16264A

DIESEL-GENERATOR SET, STATIONARY 15-300 KW, STANDBY APPLICATIONS

**06/02**

PART 1 GENERAL

1.1 REFERENCES
1.2 SUBMITTALS
1.3 SYSTEM DESCRIPTION
1.3.1 Engine-Generator Parameter Schedule
1.3.2 Output Capacity
1.3.3 Power Rating
1.4 GENERAL REQUIREMENTS
1.4.1 Engine-Generator Set
1.4.2 Nameplates
1.4.3 Personnel Safety Device
1.4.4 Verification of Dimensions
1.4.5 Conformance to Codes and Standards
1.4.6 Engine Generator Set Enclosure
1.4.7 Vibration Isolation
1.4.8 Experience
1.4.9 Field Engineer
1.5 STORAGE AND INSTALLATION
1.6 OPERATION AND MAINTENANCE MANUALS
1.6.1 Operation Manual
1.6.2 Maintenance Manual
1.7 SPECIAL TOOLS AND FILTERS

PART 2 PRODUCTS

2.1 MATERIALS AND EQUIPMENT
2.1.1 Circuit Breakers, Low Voltage
2.1.2 Filter Elements (Fuel-oil, Lubricating-oil, and Combustion-air)
2.1.3 Pipe (Sleeves, Fuel/Lube-oil, Compressed-Air, Coolant and Exhaust)
2.1.4 Pipe Flanges and Fittings
2.1.5 Pipe Hangers
2.1.6 Electrical Enclosures
2.1.6.1 General
2.1.7 Electric Motors
2.1.8 Motor Controllers
2.2 ENGINE
2.3 FUEL SYSTEM
2.3.1 Pumps
2.3.1.1 Main Pump
2.3.2 Filter
2.3.3 Relief/Bypass Valve
2.3.4 Integral Main Fuel Storage Tank
2.3.4.1 Capacity
2.3.4.2 Local Fuel Fill

2.3.4.3 Fuel Level Controls
2.3.4.4 Arrangement
2.4 LUBRICATION
2.4.1 Filter
2.4.2 Lube-Oil Sensors
2.5 COOLING SYSTEM
2.5.1 Coolant Pumps
2.5.2 Heat Exchanger
2.5.2.1 Fin-Tube-Type Heat Exchanger (Radiator)
2.5.3 Temperature Sensors
2.6 SOUND LIMITATIONS
2.7 AIR INTAKE EQUIPMENT
2.8 EXHAUST SYSTEM
2.8.1 Flexible Sections and Expansion Joints
2.8.2 Exhaust Muffler
2.8.3 Exhaust Piping
2.9 EMISSIONS
2.10 STARTING SYSTEM
2.10.1 Controls
2.10.2 Capacity
2.10.3 Functional Requirements
2.10.4 Battery
2.10.5 Battery Charger
2.10.6 Starting Aids
2.10.6.1 Glow Plugs
2.10.6.2 Jacket-Coolant Heaters
2.11 GOVERNOR
2.12 GENERATOR
2.12.1 Current Balance
2.12.2 Voltage Balance
2.12.3 Waveform
2.13 EXCITER
2.14 VOLTAGE REGULATOR
2.14.1 Steady State Performance (Regulation or Voltage Droop).
2.15 GENERATOR PROTECTION
2.16 SAFETY SYSTEM
2.16.1 Audible Signal
2.16.2 Visual Signal Signal
2.16.3 Alarms and Action Logic
2.16.3.1 Shutdown
2.16.3.2 Problem
2.16.4 Local Alarm Panel
2.16.5 Time-Delay on Alarms
2.17 ENGINE GENERATOR SET CONTROLS AND INSTRUMENTATION
2.17.1 Controls
2.17.2 Engine Generator Set Metering and Status Indication
2.18 PANELS
2.18.1 Enclosures
2.18.2 Analog
2.18.3 Parameter Display
2.19 SURGE PROTECTION
2.20 MANUAL ENGINE GENERATOR SET SYSTEM OPERATION
2.21 BASE
2.22 PAINTING AND FINISHING
2.23 FACTORY INSPECTION AND TESTS

PART 3 EXECUTION

3.1 GENERAL INSTALLATION

3.2 PIPING INSTALLATION
3.2.1 General
3.2.2 Supports
3.2.3 Flanged Joints
3.2.4 Cleaning
3.2.5 Pipe Sleeves
3.3 ELECTRICAL INSTALLATION
3.3.1 Vibration Isolation
3.4 FIELD PAINTING
3.5 ONSITE INSPECTION AND TESTS
3.5.1 Test Conditions
3.5.1.1 Data
3.5.1.2 Power Factor
3.5.1.3 Contractor Supplied Items
3.5.1.4 Instruments
3.5.1.5 Sequence
3.5.2 Construction Tests
3.5.2.1 Piping Test
3.5.2.2 Electrical Equipment Tests
3.5.3 Inspections
3.5.4 Safety Run Tests
3.5.5 Performance Tests
3.5.5.1 Continuous Engine Load Run Test
3.5.5.2 Load Acceptance Test
3.6 FINAL INSPECTION AND TESTING
3.7 MANUFACTURER'S FIELD SERVICE
3.7.1 Onsite Training
3.7.2 Manufacturer's Representative
3.8 INSTRUCTIONS
3.9 ACCEPTANCE

-- End of Section Table of Contents --

SECTION 16264A

DIESEL-GENERATOR SET, STATIONARY 15-300 KW, STANDBY APPLICATIONS
**06/02**

PART 1 GENERAL

1.1 REFERENCES

The publications listed below form a part of this specification to the extent referenced. The publications are referred to in the text by basic designation only.

AMERICAN NATIONAL STANDARDS INSTITUTE (ANSI)

| | |
|---|---|
| ANSI C39.1 | (1981; R 1992) Requirements for Electrical Analog Indicating Instruments |

AMERICAN SOCIETY FOR TESTING AND MATERIALS (ASTM)

| | |
|---|---|
| ASTM A 53/A 53M | (1999b) Pipe, Steel, Black and Hot-Dipped, Zinc-Coated, Welded and Seamless |
| ASTM A 106 | (1999el) Seamless Carbon Steel Pipe for High-Temperature Service |
| ASTM A 135 | (1997c) Electric-Resistance-Welded Steel Pipe |
| ASTM A 181/A 181M | (2000) Carbon Steel Forgings for General-Purpose Piping |
| ASTM A 234/A 234M | (2000) Piping Fittings of Wrought Carbon Steel and Alloy Steel for Moderate and High Temperature Service |
| ASTM D 975 | (1998b) Diesel Fuel Oils |

ASME INTERNATIONAL (ASME)

| | |
|---|---|
| ASME B16.3 | (1998) Malleable Iron Threaded Fittings |
| ASME B16.5 | (1996; B16.5a) Pipe Flanges and Flanged Fittings NPS 1/2 thru NPS 24 |
| ASME B16.11 | (1996) Forged Fittings, Socket-Welding and Threaded |

ELECTRICAL GENERATING SYSTEMS ASSOCIATION (EGSA)

| | |
|---|---|
| EGSA 101P | (1995a) Engine Driven Generator Sets |

INSTITUTE OF ELECTRICAL AND ELECTRONICS ENGINEERS (IEEE)

| | |
|---|---|
| IEEE C2 | (1997) National Electrical Safety Code |

| | |
|---|---|
| IEEE Std 1 | (1986; R 1992) General Principles for Temperature Limits in the Rating of Electric Equipment and for the Evaluation of Electrical Insulation |
| IEEE Std 81 | (1983) Guide for Measuring Earth Resistivity, Ground Impedance, and Earth Surface Potentials of a Ground System (Part 1) |
| IEEE Std 100 | (1997) IEEE Standard Dictionary of Electrical and Electronics Terms |
| IEEE Std 120 | (1989) Electrical Measurements in Power Circuits |
| IEEE Std 519 | (1992) Harmonic Control in Electrical Power Systems |

MANUFACTURERS STANDARDIZATION SOCIETY OF THE VALVE AND FITTINGS INDUSTRY (MSS)

| | |
|---|---|
| MSS SP-58 | (1993) Pipe Hangers and Supports - Materials, Design and Manufacture |
| MSS SP-69 | (1996) Pipe Hangers and Supports - Selection and Application |
| MSS SP-80 | (1997) Bronze Gate, Globe, Angle and Check Valves |

NATIONAL ELECTRICAL MANUFACTURERS ASSOCIATION (NEMA)

| | |
|---|---|
| NEMA AB 1 | (1993) Molded Case Circuit Breakers and Molded Case Switches |
| NEMA ICS 2 | (1993) Industrial Controls and Systems Controllers, Contactors, and Overload Relays Rated Not More Than 2,000 Volts AC or 750 Volts DC |
| NEMA ICS 6 | (1993) Industrial Control and Systems, Enclosures |
| NEMA MG 1 | (1998) Motors and Generators |
| NEMA SG 3 | (1995) Power Switching Equipment |

NATIONAL FIRE PROTECTION ASSOCIATION (NFPA)

| | |
|---|---|
| NFPA 30 | (1996; Errata TIA 96-2) Flammable and Combustible Liquids Code |

| | |
|---|---|
| NFPA 37 | (1998) Installation and Use of Stationary Combustion Engines and Gas Turbines |
| NFPA 70 | (2002) National Electrical Code |

SOCIETY OF AUTOMOTIVE ENGINEERS INTERNATIONAL (SAE)

| | |
|---|---|
| SAE ARP892 | (1965; R 1994) D-C Starter-Generator, Engine |
| SAE J537 | (1996) Storage Batteries |

UNDERWRITERS LABORATORIES (UL)

| | |
|---|---|
| UL 489 | (1996; Rev thru Dec 1998) Molded-Case Circuit Breakers, Molded-Case Switches, and Circuit-Breaker Enclosures |
| UL 1236 | (1994; Rev thru Mar 1999) Battery Chargers for Charging Engine-Starter Batteries |

## 1.2 SUBMITTALS

Government approval is required for submittals with a "G" designation; submittals not having a "G" designation are for information only. When used, a designation following the "G" designation identifies the office that will review the submittal for the Government. The following shall be submitted in accordance with Section 01330 SUBMITTAL PROCEDURES:

SD-02 Shop Drawings

Layout; G, AE
Drawings; G, AE

a. Base-mounted equipment, complete with base and attachments including anchor bolt template and recommended clearances for maintenance and operation.

b. Starting system.

c. Fuel system.

d. Cooling system.

e. Exhaust system.

f. Electric wiring of relays, breakers, programmable controllers, and switches including single line and wiring diagrams.

g. Lubrication system, including piping, pumps, strainers, filters, electric heater, controls and wiring.

h. Location, type, and description of vibration isolation devices.

i. The safety system, including wiring schematics.

j. One-line schematic and wiring diagrams of the generator,

exciter, regulator, governor, and all instrumentation.

k. Panel layouts.

l. Mounting and support for each panel and major piece of electrical equipment.

m. Engine-generator set rigging points and lifting instructions.

Acceptance; G, AE

Drawings which accurately depict the as-built configuration of the installation, upon acceptance of the diesel-generator set installation. Layout drawings shall be revised to reflect the as-built conditions and submitted with the as-built drawings.

SD-03 Product Data

Performance Tests; G-AE,

Calculations of the engine and generator output power capability, including efficiency and parasitic load data.

Sound Limitations; G, G-AE

Sound power level data for the packaged unit operating at 100% load in a free field environment. The data should demonstrate compliance with the sound limitation requirements of this specification.

Generator; G-AE,

Each generator KW rating and short circuit capacity (both symmetric and asymmetric).

Integral Main Fuel Storage Tank; G-AE,

Calculations for the capacity of each integral main fuel storage tank, including allowances for recirculated fuel, usable tank capacity, and duration of fuel supply.

Power Factor; G-AE

Generator capability curve showing generator kVA output (kW vs. kvar) for both leading and lagging power factors ranging from 0 to 1.0.

Heat Rejected to Engine-Generator Space; G-AE

Manufacturers data to quantify heat rejected to the space with the engine generator set at rated capacity.

Time-Delay on Alarms; G-AE

The magnitude of monitored values which define alarm or action setpoints, and the tolerance (plus and/or minus) at which the device activates the alarm or action.

Cooling System; G-AE

a. The maximum and minimum allowable inlet temperatures of the coolant fluid.

b. The maximum allowable temperature rise in the coolant fluid through the engine.

c. The minimum allowable inlet fuel temperature.

Manufacturer's Catalog; G-AE

Manufacturer's standard catalog data describing and depicting each engine-generator set and all ancillary equipment in sufficient detail to demonstrate specification compliance.

Vibration Isolation; G-AE

Vibration isolation system performance data for the range of frequencies generated by the engine-generator set during operation from no load to full load and the maximum vibration transmitted to the floor. Description of seismic qualification of the engine-generator mounting, base, and vibration isolation.

Instructions; G, AE

Instructions including: the manufacturer's pre-start checklist and precautions; startup procedures for test mode, manual-start mode, and automatic-start mode, (as applicable); running checks, procedures, and precautions; and shutdown procedures, checks, and precautions. Instructions shall include procedures for interrelated equipment (such as heat recovery systems, co-generation, load-shedding, and automatic transfer switches). Instructions shall be weatherproof, laminated in plastic, framed, and posted where directed. Posted data shall include wiring and control diagrams showing the key mechanical and electrical control elements, and a diagrammatic layout of the system.

Experience; G-AE

Statement showing that each component manufacturer has a minimum of 3 years experience in the manufacture, assembly and sale of components used with stationary diesel-engine generator sets for commercial and industrial use.

Statement showing that the engine-generator set manufacturer/assembler has a minimum of 3 years experience in the manufacture, assembly and sale of stationary diesel engine-generator sets for commercial and industrial use.

Field Engineer; G-AE

A letter listing the qualifications, schools, formal training, and experience of the field engineer.

General Installation; G-AE

A complete copy of the manufacturer's installation procedures. A detailed description of the manufacturer's recommended break-in procedure.

Site Visit; G-AO, G-AE

A site visit letter stating the date the site was visited and listing discrepancies found.

SD-06 Test Reports

Onsite Inspection and Tests; G, G-AO, G-AE

a. A letter giving notice of the proposed dates of all onsite inspections and tests at least 14 days prior to beginning tests.

b. A detailed description of the Contractor's proposed procedures for onsite tests including the test including the test plan and a listing of equipment necessary to perform the tests. Submission shall be at least 7 days prior to beginning tests.

c. Six copies of the onsite test data described below in 8-1/2 x 11 inch 3-ring binders with a separate section for each test. Sections shall be separated by dividers with tabs. Data plots shall be full size 8-1/2 x 11 inches minimum), showing all grid lines, with full resolution.

(1) A description of the procedures for onsite tests.

(2) A list of equipment used, with calibration certifications.

(3) A copy of measurements taken, with required plots and graphs.

(4) The date of testing.

(5) The parameters verified.

(6) The condition specified for the parameter.

(7) The test results, signed and dated.

(8) A description of all adjustments made.

SD-07 Certificates

Vibration Isolation; G-AE

Torsional analysis including prototype testing or calculations which certify and demonstrate that no damaging or dangerous torsional vibrations will occur when the prime mover is connected to the generator, at synchronous speeds, plus/minus 10%.

Prototype Tests; G-AE

Manufacturer's standard certification that prototype tests were performed for the generator model proposed.

Reliability and Durability; G-AE

Documentation which cites engines and generators in similar service to demonstrate compliance with the requirements of this specification. Certification does not exclude annual technological improvements made by a manufacturer in the basic standard model set on which experience was obtained, provided parts interchangeability has not been substantially affected and the current standard model meets all the performance requirements of this specification. For each different set, 2 like sets shall have performed satisfactorily in a stationary power application, independent and separate from the physical location of the manufacturer's and assembler's facilities, for a minimum of 2 consecutive years without any failure to start, including periodic exercise. The certification shall state that for the set proposed to meet this specification, there were no failures resulting in downtime for repairs in excess of 72 hours or any failure due to overheating during 2 consecutive years of service. Like sets are of the same model, speed, bore, stroke, number and configuration of cylinders, and output power rating. Like generators are of the same model, speed, pitch, cooling, exciter, voltage regulator and output power rating. A list shall be provided with the name of the installations, completion dates, and name and telephone number of a point of contact.

Emissions; G-AO

A certification from the engine manufacturer stating that the engine exhaust emissions meet federal, state, and local regulations and restrictions specified. At a minimum, this certification shall include emission factors for criteria pollutants including nitrogen oxides, carbon monoxide, particulate matter, sulfur dioxide, non-methane hydrocarbon, and for hazardous air pollutants (HAPs).

Sound limitations; G-AO

A certification from the manufacturer stating that the sound emissions meet the specification.

Flywheel Balance; G-AE

Manufacturer's certification that the flywheel has been statically and dynamically balanced and is capable of being rotated at 125% of rated speed without vibration or damage.

Materials and Equipment; G-AE

A letter stating that where materials or equipment are specified to comply with requirements of UL, or other standards, written proof of such compliance has been obtained. The label or listing of the specified agency, or a written certificate from an approved, nationally recognized testing organization equipped to perform such services, stating that the items have been tested and conform to the requirements and testing methods of the specified agency are acceptable as proof.

Factory Inspection and Tests; G-EA

A certification that each engine generator set passed the

factory tests and inspections and a list of the test and inspections.

Inspections; G-AO, G-RE

A letter certifying that all facilities are complete and functional, that each system is fully functional, and that each item of equipment is complete, free from damage, adjusted, and ready for beneficial use.

Cooling System; G-AE

Certification that the engine-generator set and cooling system function properly in the ambient temperatures specified.

## 1.3 SYSTEM DESCRIPTION

Each engine-generator set shall be provided and installed complete and totally functional, with all necessary ancillary equipment to include air filtration; starting system; generator controls, protection, and isolation; instrumentation; lubrication; fuel system; cooling system; and engine exhaust system. Each engine generator set shall satisfy the requirements specified in the Engine Generator Parameter Schedule.

### 1.3.1 Engine-Generator Parameter Schedule

ENGINE GENERATOR PARAMETER SCHEDULE

| | |
|---|---|
| Service Load | 300 kW |
| Power Factor | 0.8 lagging |
| Motor Starting kVA (maximum) | 700 kVA |
| Maximum Speed | 1800 rpm |
| Engine-Generator Application | stand-alone |
| Engine Cooling Type | water/ethylene glycol |
| Heat Exchanger Type | fin-tube |
| Governor Type | Droop |
| Frequency Regulation (droop) (No load to full load) | 3% (max.) |
| Frequency Bandwidth (steady state) | ± 0.4 |
| Voltage Regulation (No load to full load) | ± 2% (max.) |
| Voltage Bandwidth (steady state) | ± 2% |

| | |
|---|---|
| Frequency | 60 Hz |
| Voltage | 480/277 volts |
| Phases | 3 Phase, Wye |
| Max Step Load Increase | 60 % of Service Load at .8 PF |
| Max Step Load Decrease (without shutdown) | 100 % of Service Load at .8 PF |
| Max Time to Start and be Ready to Assume Load | 10 seconds |
| Max Summer Outdoor Temp (Ambient) | 120 degrees |
| Min Winter Outdoor Temp (Ambient) | 20 degrees |
| Installation Elevation | 26 feet above sea level |

1.3.2 Output Capacity

Each generator set shall provide power equal to the sum of service load plus the machine's efficiency loss and associated ancillary equipment loads. Rated output capacity shall also consider engine and/or generator oversizing required to meet requirements in paragraph Engine-Generator Parameter Schedule.

1.3.3 Power Rating

Standby ratings shall be in accordance with EGSA 101P.

1.4 GENERAL REQUIREMENTS

1.4.1 Engine-Generator Set

Each set shall consist of one engine, one generator, and one exciter, mounted, assembled, and aligned on one base; and all other necessary ancillary equipment which may be mounted separately. Sets shall be assembled and attached to the base prior to shipping. Set components shall be environmentally suitable for the locations shown and shall be the manufacturer's standard product offered in catalogs for commercial or industrial use. A generator strip heater shall be provided for moisture control when the generator is not operating.

1.4.2 Nameplates

Each major component of this specification shall have the manufacturer's name, type or style, model or serial number, and rating number on a plate secured to the equipment. As a minimum, nameplates shall be provided for: Engines; Relays; Generators; Transformers (CT & PT); Regulators; Pumps and pump motors; Governors; Generator Breaker; Economizers.

| | |
|---|---|
| Engines | Relays |
| Generators | |
| Transformers (CT & PT) | Regulators |
| Pumps and pump motors | Governors |
| Generator Breaker | Economizers |

Where the following equipment is provided as a standard component by the diesel-engine generator set manufacturer, the nameplate information may be provided in the maintenance manual in lieu of nameplates.

| | |
|---|---|
| Battery charger | Heaters |
| Exhaust mufflers | Exciters |
| Switchgear | Silencers |
| Battery | |

1.4.3 Personnel Safety Device

Exposed moving parts, parts that produce high operating temperatures, parts which may be electrically energized, and parts that may be a hazard to operating personnel during normal operation shall be insulated, fully enclosed, guarded, or fitted with other types of safety devices. The safety devices shall be installed so that proper operation of the equipment is not impaired.

1.4.4 Verification of Dimensions

Before performing work, the premises shall be visited and details of the work verified. The Contracting Officer shall be advised in writing of any discrepancies before performing any work.

1.4.5 Conformance to Codes and Standards

Where equipment is specified to conform to requirements of any code or standard such as UL, the design, fabrication and installation shall conform to the code.

1.4.6 Engine Generator Set Enclosure

The engine generator set enclosure shall be corrosion resistant and fully weather resistant. The enclosure shall contain all set components and provide ventilation to permit operation at rated load under secured conditions. Doors shall be provided for access to all controls and equipment requiring periodic maintenance or adjustment. Removable panels shall be provided for access to components requiring periodic replacement. The enclosure shall be capable of being removed without disassembly of the engine-generator set or removal of components other than exhaust system. The enclosure shall reduce the noise of the generator set to within the limits specified in the paragraph SOUND LIMITATIONS.

1.4.7 Vibration Isolation

The maximum engine-generator set vibration in the horizontal, vertical and

axial directions shall be limited to 6 mils (peak-peak RMS), with an overall velocity limit of  RMS, for all speeds through 110% Field Engineer of rated speed. The engine-generator set shall be provided with vibration-isolation in accordance with the manufacturer's standard recommendation. Where the vibration-isolation system does not secure the base to the structure floor or unit foundation, seismic restraints shall be provided in accordance with the seismic parameters specified.

### 1.4.8 Experience

Each component manufacturer shall have a minimum of 3 years experience in the manufacture, assembly and sale of components used with stationary diesel engine-generator sets for commercial and industrial use. The engine-generator set manufacture/assembler shall have a minimum of 3 years experience in the manufacture, assembly and sale of stationary diesel engine-generator sets for commercial and industrial use.

### 1.4.9 Field Engineer

The engine-generator set manufacturer or assembler shall furnish a qualified field engineer to supervise the complete installation of the engine-generator set, assist in the performance of the onsite tests, and instruct personnel as to the operational and maintenance features of the equipment. The field engineer shall have attended the engine-generator manufacturer's training courses on installation and operation and maintenance for engine generator sets.

## 1.5 STORAGE AND INSTALLATION

The Contractor shall properly protect material and equipment in accordance with the manufacturers recommended storage procedures, before, during, and after installation. Stored items shall be protected from the weather and contamination. During installation, piping and similar openings shall be capped to keep out dirt and other foreign matter.

## 1.6 OPERATION AND MAINTENANCE MANUALS

The operation and maintenance manuals shall be submitted and approved prior to commencing onsite tests.

### 1.6.1 Operation Manual

Three copies of the manufacturers standard operation manual. The manual shall include:

a. Step-by-step procedures for system startup, operation, and shutdown;

b. Drawings, diagrams, and single-line schematics to illustrate and define the electrical, mechanical, and hydraulic systems with their controls, alarms, and safety systems;

### 1.6.2 Maintenance Manual

Three copies of the manufacturers standard maintenance manual.

a. Procedures for each routine maintenance item.

b. The manufacturer's recommended maintenance schedule.

c. A component list which includes the manufacturer's name, address, type or style, model or serial number, rating, and catalog number for the major components listed in paragraph GENERAL REQUIREMENTS.

d. A list of spare parts for each piece of equipment and a complete list of materials and supplies needed for operation.

1.7 SPECIAL TOOLS AND FILTERS

Two sets of special tools and two sets of filters required for maintenance shall be provided. Special tools are those that only the manufacturer provides, for special purposes, or to reach otherwise inaccessible parts. One handset shall be provided for each electronic governor when required to indicate and/or change governor response settings. Two complete sets of filters shall be supplied in a suitable storage box. these filters shall be in addition to filters replaced after testing.

PART 2 PRODUCTS

2.1 MATERIALS AND EQUIPMENT

Materials and equipment shall be as specified.

2.1.1 Circuit Breakers, Low Voltage

NEMA AB 1, UL 489, and NEMA SG 3.

2.1.2 Filter Elements (Fuel-oil, Lubricating-oil, and Combustion-air)

Manufacturer's standard.

2.1.3 Pipe (Sleeves, Fuel/Lube-oil, Compressed-Air, Coolant and Exhaust)

ASTM A 53/A 53M, ASTM A 106 or ASTM A 135, steel pipe. Pipe smaller than 2 inches shall be Schedule 80. Pipe 2 inches and larger shall be Schedule 40.

2.1.4 Pipe Flanges and Fittings

a. Pipe Flanges and Flanged Fittings: ASTM A 181/A 181M, Class 60, or ASME B16.5, Grade 1, Class 150.

b. Pipe Welding Fittings: ASTM A 234/A 234M, Grade WPB or WPC, Class 150, or ASME B16.11, 3000 lb.

c. Threaded Fittings: ASME B16.3, Class 150.

d. Valves: MSS SP-80, Class 150.

e. Gaskets: Manufacturers Standard.

2.1.5 Pipe Hangers

MSS SP-58 and MSS SP-69.

2.1.6 Electrical Enclosures
2.1.6.1 General

NEMA ICS 6.

2.1.7 Electric Motors

Electric motors shall conform to the requirements of NEMA MG 1. Motors shall have sealed ball bearings, a maximum speed of 1800 rpm and integral automatic or manual reset thermal overload protectors. Motors used indoors shall have drip proof frames; those used outside shall be totally enclosed. AC motors larger than 1/2 Hp shall be of the squirrel cage induction type for standard voltage of 200 or 460 volts, 60 Hz three phase power. AC motors 1/2 Hp or smaller, shall be for standard voltage 115 volts, 60 Hz, single phase power.

2.1.8 Motor Controllers

Motor controllers and starters shall conform to the requirements of NFPA 70 and NEMA ICS 2.

2.2 ENGINE

Each engine shall operate on No. 2-D diesel conforming to ASTM D 975, shall be designed for stationary applications and shall be complete with ancilliaries. The engine shall be a standard production model described in the manufacturer's catalog. The engine shall be naturally aspirated, scavenged, supercharged or turbocharged. The engine shall be two- or four-stroke-cycle and compression-ignition type. The engine shall be vertical inline, V-, or opposed-piston type, with a solid cast block or individually cast cylinders. The engine shall have a minimum of two cylinders. Opposed-piston type engines shall have no less than four cylinders. Each block shall have a coolant drain port. Each engine shall be equipped with an overspeed sensor.

2.3 FUEL SYSTEM

The fuel system for each engine generator set shall conform to the requirements of NFPA 30 and NFPA 37 and contain the following elements.

2.3.1 Pumps

2.3.1.1 Main Pump

Each engine shall be provided with an engine driven pump. The pump shall supply fuel at a minimum rate sufficient to provide the amount of fuel required to meet the performance indicated within the parameter schedule. The fuel flow rate shall be based on meeting the load requirements and all necessary recirculation.

2.3.2 Filter

A minimum of one full flow fuel filter shall be provided for each engine. The filter shall be readily accessible and capable of being changed without disconnecting the piping or disturbing other components. The filter shall have inlet and outlet connections plainly marked.

2.3.3 Relief/Bypass Valve

A relief/bypass valve shall be provided to regulate pressure in the fuel supply line, return excess fuel to a return line, and prevent the build-up of excessive pressure in the fuel system.

2.3.4 Integral Main Fuel Storage Tank

Each engine shall be provided with an integral main fuel tank. Each tank shall be factory installed and provided as an integral part of the diesel generator manufacturer's product. Each tank shall be provided with connections for fuel supply line, fuel return line, local fuel fill port, gauge, vent line, and float switch assembly. A fuel return line cooler shall be provided as recommended by the manufacturer and assembler. The temperature of the fuel returning to the tank shall be below the flash point of the fuel. Each engine-generator set provided with weatherproof enclosures shall have its tank mounted within the enclosure. The fuel fill line shall be accessible without opening the enclosure.

2.3.4.1 Capacity

Each tank shall have capacity to supply fuel to the engine for an uninterrupted 8-hour period at 100% rated load without being refilled.

2.3.4.2 Local Fuel Fill

Each local fuel fill port on the integral main fuel storage tank shall be provided with a screw-on cap.

2.3.4.3 Fuel Level Controls

a. Each tank shall have a float-switch assembly to perform the following functions:

(1) Activate the "Low Fuel Level" alarm at 70% of the rated tank capacity.

(2) Activate the "Overfill Fuel Level" alarm at 95% of the rated tank capacity.

2.3.4.4 Arrangement

Integral tanks may allow gravity flow into the engine. Gravity flow tanks and any tank that allows a fuel level above the fuel injectors shall be provided with an internal or external factory installed valve located as near as possible to the shell of the tank. The valve shall close when the engine is not operating. Integral day tanks shall be provided with any necessary pumps to supply fuel to the engine as recommended by the generator set manufacturer. The fuel supply line from the tank to the manufacturer's standard engine connection shall be welded pipe.

2.4 LUBRICATION

Each engine shall have a separate lube-oil system conforming to NFPA 30 and NFPA 37. Each system shall be pressurized by engine-driven oil pumps. Each system shall be furnished with a relief valve for oil pressure regulation (for closed systems) and a dip-stick for oil level indications. The crankcase shall be vented in accordance with the manufacturer's

recommendation except that it shall not be vented to the engine exhaust system. Crankcase breathers, if provided on engines installed in buildings or enclosures, shall be piped to vent to the outside. The system shall be readily accessible for service such as draining, refilling, etc. Each system shall permit addition of oil and have oil-level indication with the set operating. The system shall utilize an oil cooler as recommended by the engine manufacturer.

2.4.1 Filter

One full-flow filter shall be provided for each pump. The filter shall be readily accessible and capable of being changed without disconnecting the piping or disturbing other components. The filter shall have inlet and outlet connections plainly marked.

2.4.2 Lube-Oil Sensors

Each engine shall be equipped with lube-oil pressure sensors. Pressure sensors shall be located downstream of the filters and provide signals for required indication and alarms.

2.5 COOLING SYSTEM

Each engine cooling system shall operate automatically while the engine is running. Each cooling system shall be sized for the maximum summer design temperature and site elevation. Water-cooled system coolant shall use a combination of water and ethylene-glycol sufficient for freeze protection at the minimum winter outdoor temperature specified. The maximum temperature rise of the coolant across the engine shall be no more than that recommended and submitted in accordance with paragraph SUBMITTALS.

2.5.1 Coolant Pumps

Coolant pumps shall be the centrifugal type. Each engine shall have an engine-driven primary pump. Secondary pumps shall be electric motor driven and have automatic controllers.

2.5.2 Heat Exchanger

Each heat exchanger shall be of a size and capacity to limit the maximum allowable temperature rise in the coolant across the engine to that recommended and submitted in accordance with paragraph SUBMITTALS for the maximum summer outdoor design temperature and site elevation. Each heat exchanger shall be corrosion resistant, suitable for service in ambient conditions of application.

2.5.2.1 Fin-Tube-Type Heat Exchanger (Radiator)

Heat exchanger may be factory coated with corrosive resistant film providing that corrosion measures are taken to restore the heat rejection capability of the radiator to the initial design requirement via oversizing, or other compensating methods. Internal surfaces shall be compatible with liquid fluid coolant used. Materials and coolant are subject to approval by the Contracting Officer. Heat exchangers shall be pressure type incorporating a pressure valve, vacuum valve and a cap. Caps shall be designed for pressure relief prior to removal. Each heat exchanger and the entire cooling system shall be capable of withstanding a minimum pressure of 7 psi. Each heat exchanger shall be protected with a strong grille or screen guard. Each heat exchanger shall have at least two

tapped holes. One tapped hole in the heat exchanger shall be equipped with a drain cock, the rest shall be plugged.

2.5.3 Temperature Sensors

Each engine shall be equipped with coolant temperature sensors. Temperature sensors shall provide signals for pre-high and high indication and alarms.

2.6 SOUND LIMITATIONS

The noise generated by the installed diesel generator set operating at 100 percent load shall not exceed the following sound pressure levels in any of the indicated frequencies when measured at a distance of 75 feet from the end of the exhaust and air intake piping directly along the path of intake and discharge for horizontal piping; or at a radius of 75 feet from the engine at 45 degrees apart in all directions for vertical piping.

| Frequency Band (Hz) | Maximum Acceptable Pressure Level (Decibels) |
|---|---|
| 31 | 87 |
| 63 | 87 |
| 125 | 77 |
| 250 | 70 |
| 500 | 64 |
| 1,000 | 61 |
| 2,000 | 60 |
| 4,000 | 60 |
| 8,000 | 62 |

2.7 AIR INTAKE EQUIPMENT

Filters and silencers shall be provided in locations that are convenient for servicing. The silencer shall be of the high-frequency filter type, located in the air intake system as recommended by the engine manufacturer. Silencer shall be capable of reducing the noise level at the air intake to a point below the maximum acceptable levels specified in paragraph SOUND LIMITATIONS. A combined filter-silencer unit meeting requirements for the separate filter and silencer items may be provided. Expansion elements in air-intake lines shall be rubber.

2.8 EXHAUST SYSTEM

The system shall be separate and complete for each engine. Piping shall be supported so as to minimize vibration. Where a V-type engine is provided, a V-type connector with necessary flexible sections and hardware shall connect the engine exhaust outlets.

2.8.1 Flexible Sections and Expansion Joints

A flexible section at each engine and an expansion joint at each muffler shall be provided. Flexible sections and expansion joints shall have flanged connections. Flexible sections shall be made of convoluted seamless tube without joints or packing. Expansion joints shall be the bellows type. Expansion and flexible elements shall be stainless steel suitable for diesel-engine exhaust gas at the maximum exhaust temperature

that is specified by the engine manufacturer. Expansion and flexible elements shall be capable of absorbing vibration from the engine and compensation for thermal expansion and contraction.

2.8.2 Exhaust Muffler

A chamber type exhaust muffler shall be provided. The muffler shall be constructed of welded steel and designed for outside horizontal mounting. Eyebolts, lugs, flanges, or other items shall be provided as necessary for support in the location and position indicated. Pressure drop through the muffler shall not exceed the recommendations of the engine manufacturer. Outside mufflers shall be zinc coated or painted with high temperature 400 degrees F resisting paint. The muffler and exhaust piping together shall reduce the noise level to less than the maximum acceptable level listed for sound limitations in paragraph SOUND LIMITATIONS. The muffler shall have a drain valve, nipple, and cap at the low-point of the muffler.

2.8.3 Exhaust Piping

Horizontal sections of exhaust piping shall be sloped downward away from the engine to a condensate trap and drain valve. Changes in direction shall be long-radius. Exhaust piping, mufflers and silencers installed inside any building shall be insulated in accordance with paragraph THERMAL INSULATION and covered to protect personnel. Vertical exhaust piping shall be provided with a hinged, gravity operated, self-closing, rain cover.

2.9 EMISSIONS

The finished installation shall comply with Federal, state, and local regulations and restrictions regarding the limits of emissions

2.10 STARTING SYSTEM

The starting system for engine generator sets used in non-emergency applications shall be as follows.

2.10.1 Controls

An engine control switch shall be provided with functions including: run/start (manual), off/reset, and automatic mode. Start-stop logic shall be provided for adjustable cycle cranking and cool down operation. The logic shall be arranged for manual starting. Electrical starting systems shall be provided with an adjustable cranking limit device to limit cranking periods from 1 second up to the maximum duration.

2.10.2 Capacity

The starting system shall be of sufficient capacity, at the maximum outdoor summer temperature specified to crank the engine without damage or overheating. The system shall be capable of providing a minimum of three cranking periods with 15-second intervals between cranks. Each cranking period shall have a maximum duration of 15 seconds.

2.10.3 Functional Requirements

Starting system shall be manufacturers recommended dc system utilizing a negative circuit ground. Starting motors shall be in accordance with SAE ARP892.

2.10.4 Battery

A starting battery system shall be provided and shall include the battery, battery rack, intercell connectors, and spacers. The battery shall be in accordance with SAE J537. Critical system components (rack, protection, etc.) shall be sized to withstand the seismic acceleration forces specified. The battery shall be nickel-cadmium type, with sufficient capacity, at the minimum outdoor winter temperature specified to provide the specified cranking periods. Valve-regulated lead-acid batteries are not acceptable.

2.10.5 Battery Charger

A current-limiting battery charger, conforming to UL 1236, shall be provided and shall automatically recharge the batteries. The charger shall be capable of an equalize charging rate for recharging fully depleted batteries within 24 hours and a float charge rate for maintaining the batteries in prime starting condition. An ammeter shall be provided to indicate charging rate. A timer shall be provided for the equalize charging rate setting. A battery is considered to be fully depleted when the output voltage falls to a value which will not operate the engine generator set and its components.

2.10.6 Starting Aids

The manufacturer shall provide one or more of the following methods to assist engine starting.

2.10.6.1 Glow Plugs

Glow plugs shall be designed to provide sufficient heat for combustion of fuel within the cylinders to guarantee starting at an ambient temperature of minus 25 degrees F.

2.10.6.2 Jacket-Coolant Heaters

A thermostatically controlled electric heater shall be mounted in the engine coolant jacketing to automatically maintain the coolant within plus or minus 3 degrees of the control temperature. The heater shall operate independently of engine operation so that starting times are minimized. The control temperature shall be the temperature recommended by the engine manufacturer to meet the starting time specified.

2.11 GOVERNOR

Each engine shall be provided with a governor which maintains the frequency within a bandwidth of the rated frequency, over a steady-state load range of zero to 100% of rated output capacity. The governor shall be configured for safe manual adjustment of the speed/frequency during operation of the engine generator set, without special tools, from 90 to 110 % of the rated speed/frequency, over a steady state load range of zero to 100% of rated capacity. Droop governors shall maintain the midpoint of the frequency bandwidth linearly for steady-state loads over the range of zero to 100% of rated output capacity, with 3% droop.

2.12 GENERATOR

Each generator shall be of the synchronous type, one or two bearing, conforming to NEMA MG 1, equipped with winding terminal housings in

accordance with NEMA MG 1, equipped with an amortisseur winding, and directly connected to the engine. Insulation shall be Class F. Generator design shall protect against mechanical, electrical and thermal damage due to vibration, 25 percent overspeeds, or voltages and temperatures at a rated output capacity of 100 percent. Generator ancillary equipment shall meet the short circuit requirements of NEMA MG 1. Frames shall be the drip-proof type.

2.12.1 Current Balance

At 100 percent rated load, and load impedance equal for each of the three phases, the permissible current difference between any two phases shall not exceed 2 percent of the largest current on either of the two phases.

2.12.2 Voltage Balance

At any balanced load between 75 and 100 percent of rated load, the difference in line-to-neutral voltage among the three phases shall not exceed 1 percent of the average line-to-neutral voltage. For a single-phase load condition, consisting of 25 percent load at unity power factor placed between any phase and neutral with no load on the other two phases, the maximum simultaneous difference in line-to-neutral voltage between the phases shall not exceed 3 percent of rated line to neutral voltage. The single-phase load requirement shall be valid utilizing normal exciter and regulator control. The interpretation of the 25 percent load for single phase load conditions means 25 percent of rated current at rated phase voltage and unity power factor.

2.12.3 Waveform

The deviation factor of the line-to-line voltage at zero load and at balanced full rated load at 0.8 power factor shall not exceed 10%. The RMS of all harmonics shall be less than 5.0% and that of any one harmonic less than 3.0% at full rated load. Each engine-generator shall be designed and configured to meet the total harmonic distortion limits of IEEE Std 519.

2.13 EXCITER

The generator exciter shall be of the brushless type. Semiconductor rectifiers shall have a minimum safety factor of 300% for peak inverse voltage and forward current ratings for all operating conditions, including 110% generator output at 120 degrees F ambient. The exciter and regulator in combination shall maintain generator-output voltage within the limits specified.

2.14 VOLTAGE REGULATOR

Each generator shall be provided with a solid-state voltage regulator, separate from the exciter. The regulator shall maintain the voltage within a bandwidth of the rated voltage, over a steady-state load range of zero to 100% of rated output capacity. Regulator shall be configured for safe manual adjustment of the engine generator voltage output without special tools, during operation from 90 to 110% of the rated voltage over the steady state load range of zero to 100% of rated output capacity. Regulation drift shall not exceed plus or minus 0.5% for an ambient temperature change of 36 degrees F.

2.14.1 Steady State Performance (Regulation or Voltage Droop).

The voltage regulator shall have a maximum droop of 2% of rated voltage over a load range from 0 to 100% of rated output capacity and automatically maintain the generator output voltage within the specified operational bandwidth.

2.15 GENERATOR PROTECTION

Short circuit and overload protection for the generator shall be provided. The generator circuit breaker (IEEE Device 52) ratings shall be consistent with the generator rated voltage and frequency, with continuous, short circuit and interrupting current ratings to match the generator capacity. The manufacturer shall determine the short circuit current interrupting rating of the breaker. The breaker shall be engine generator base mounted by the engine-generator set manufacturer. Molded case breakers shall be provided with shunt trip. Surge protection shall be provided for each phase of the generator, to be mounted at the generator terminals.

2.16 SAFETY SYSTEM

Devices, wiring, local panels, etc., shall be provided and installed as a complete system to automatically activate the appropriate signals and initiate the appropriate actions. The safety system shall be provided with a self-test method to verify its operability. Alarm signals shall have manual acknowledgement and reset devices. The alarm signal systems shall reactivate for new signals after acknowledgment is given to any signal. The systems shall be configured so that loss of any monitoring device shall be dealt with as an alarm on that system element.

2.16.1 Audible Signal

The audible alarm signal shall sound at a frequency of 70 Hz at a volume of at least 90 dB at 10 feet. The sound shall be continuously activated upon alarm and silenced upon acknowledgment. Signal devices shall be located as shown.

2.16.2 Visual Signal Signal

The visual alarm signal shall be a panel light. The light shall be normally off, activated to be blinking upon alarm. The light shall change to continuously light upon acknowledgement. If automatic shutdown occurs, the display shall maintain activated status to indicate the cause of failure and shall not be reset until cause of alarm has been cleared and/or restored to normal condition. Shutdown alarms shall be red; all other alarms shall be amber.

2.16.3 Alarms and Action Logic

2.16.3.1 Shutdown

Simultaneous activation of the audible signal, activation of the visual signal, stopping the engine, and opening the generator main circuit breakers shall be accomplished.

2.16.3.2 Problem

Activation of the visual signal shall be accomplished.

2.16.4 Local Alarm Panel

A local alarm panel shall be provided with the following shutdown and alarm functions in accordance with NFPA 110 level and including the listed Corps of Engineers requirements, mounted either on or adjacent to the engine generator set.

| Device/ Condition/ Function | What/Where/Size | NFPA 99 | NFPA 110 Level 1 | NFPA 110 Level 2 | Corps of Engrs Required |
|---|---|---|---|---|---|
| Shutdowns W/Alarms | | | | | |
| High engine temperature | Automatic/ jacket water/ cylinder | SD/CP VA | SD/CP VA | SD/CP VA | SD VA |
| Low lube-oil pressure | Automatic/ pressure/ level | SD/CP VA | SD/CP VA | SD/CP VA | SD VA |
| Overspeed shutdown $ alarm | (110% (± 2%) of rated speed | SD/CP VA | SD/CP VA | SD/CP VA | SD VA |
| Overcrank failure to start | Automatic/ Failure to to start | SD/CP VA | SD/CP VA | SD/CP VA | |
| Air shutdown damper (200-600kW) | When used | | SD/CP VA | SD/CP VA | |
| Red emergency stop switch | Manual Switch | | SD/CP VA | SD/CP VA | SD VA |
| Failure to crank | Corps of Engrs. Required | | | | |
| Integral Main Fuel Tank low fuel limit Device/ Condition/ indication (70% volume remaining) | Required | | | | |
| Alarms | | | | | |
| Low lube-oil pressure | Pressure/ level | CP VA | CP VA | CP VAO | CP VA |
| Low fuel level | Main tank, 3 hours remaining | VA/AA | CP VA | CP VAO | |

| Device/ Condition/ Function | What/Where/Size | NFPA 99 | NFPA 110 Level 1 | NFPA 110 Level 2 | Corps of Engrs Required |
|---|---|---|---|---|---|
| High fuel level | Integral Main Fuel Storage Tank 95% Volume | | | | CP VA |
| Low coolant | Jacket water | CP/VA | CP VA | CP VA | |
| Pre-high temperature | Jacket water/ cylinder | CP VA | CP VA | CP VAO | CP VA |
| Pre-low lube-oil pressure | | CP VA | | | CP VA |
| High battery voltage | | | CP VA | CP VAO | |
| Low battery voltage | | | CP VA | CP VAO | |
| Battery charger AC failure | AC supply not available | | CP VA | CP VAO | |
| Control switch not in AUTO | | | CP VA | CP VAO | |
| Low starting air pressure | | | CP VA | CP VAO | |
| Low starting hydraulic pressure | | | CP VA | CP VAO | |

SD - Shut Down
CP - On Control Panel
VA - Visual Alarm
AA - Audible Alarm
O - Optional

2.16.5 Time-Delay on Alarms

For startup of the engine-generator set, time-delay devices shall be installed bypassing the low lubricating oil pressure alarm during cranking, and the coolant-fluid outlet temperature alarm. The lube-oil time-delay device shall return its alarm to normal status after the engine starts. The coolant time-delay device shall return its alarm to normal status 5 minutes after the engine starts.

2.17 ENGINE GENERATOR SET CONTROLS AND INSTRUMENTATION

Devices, wiring, remote panels, local panels, etc., shall be provided and installed as a complete system to automatically activate the appropriate signals and initiate the appropriate actions.

2.17.1 Controls

A local control panel shall be provided with controls in accordance with NFPA 110 level 2 and as follows mounted either on or adjacent to the engine generator set.

| Device/Condition/ Function | Corps Requirement | NFPA 110 Level 1 | NFPA 110 Level 2 | MFG Offering |
|---|---|---|---|---|
| Controls | | | | |
| Switch: run/start - off/set - auto | CP | | | CP/STD |
| Emergency stop switch & alarm | CP | | | CP/STD |
| Lamp test/indicator test | CP | CP VA | CP VA | CP/STD |
| Common alarm contacts/ fault relay | | X | X | CP/O |
| Panel lighting | CP | | | CP/STD |
| Audible alarm & silencing/reset switch | CP | | | |
| Voltage adjust for voltage Regulator | CP | | | CP/STD |
| Pyrometer display w/selector switch | CP | | | |
| Remote emergency stop switch | | CP VA | CP VA | |
| Remote fuel shutoff switch | | | | |
| Remote lube-oil shutoff switch | | | | |

2.17.2 Engine Generator Set Metering and Status Indication

A local panel shall be provided with devices in accordance with NFPA 110 level 2 and as follows mounted either on or adjacent to the engine generator set.

| Device/Condition/ Function | Corps Requirement | NFPA 110 Level 1 | NFPA 110 Level 2 | MFG Offering |
|---|---|---|---|---|
| Genset Status & Metering | | | | |
| Genset supplying load | | CP VA | CP VAO | CP VAO |
| System ready | | | | CP/STD |
| Engine oil pressure | CP | | | CP/STD |
| Engine coolant temperature | CP | | | CP/STD |
| Engine RPM (Tachometer) | CP | | | CP/STD |
| Engine run hours | CP | | | CP/STD |
| Pyrometer display w/selector switch | CP | | | |

| Device/Condition/ Function | Corps Requirement | NFPA 110 Level 1 | NFPA 110 Level 2 | MFG Offering |
|---|---|---|---|---|
| AC volts (generator), 3-phase | CP | | | CP/STD |
| AC amps (generator), 3-phase | CP | | | CP/STD |
| Generator frequency | CP | | | CP/STD |
| Phase selector switches (amps & volts) | CP | | | CP/STD |
| Watts/kW | | | | CP/VA-O |
| Voltage Regulator Adjustment | CP | | | |

CP - On Control Panel
VA - Visual Alarm
AA - Audible Alarm
O - Optional
STD - Manufacturers Standard Offering

## 2.18 PANELS

Each panel shall be of the type necessary to provide specified functions. Panels shall be mounted on the engine generator set base by vibration/shock absorbing type mountings. Instruments shall be mounted flush or semiflush. Convenient access to the back of instruments shall be provided to facilitate maintenance. Instruments shall be calibrated using recognized industry calibration standards. Each panel shall be provided with a panel identification plate which clearly identifies the panel function as indicated. Each instrument and device on the panel shall be provided with a plate which clearly identifies the device and its function as indicated. Panels except the remote alarm panel can be combined into a single panel.

### 2.18.1 Enclosures

Enclosures shall be designed for the application and environment, conforming to NEMA ICS 6, and provided with locking mechanisms which are keyed alike.

### 2.18.2 Analog

Analog electrical indicating instruments shall be in accordance with ANSI C39.1 with semiflush mounting. Switchgear, and control-room panel-mounted instruments shall have 250 degree scales with an accuracy of not less than 1 percent. Unit-mounted instruments shall be the manufacturer's standard with an accuracy of not less than 2 percent. The instrument's operating temperature range shall be minus 20 to plus 65 degrees C. Distorted generator output voltage waveform of a crest factor less than 5 shall not affect metering accuracy for phase voltages, hertz and amps.

### 2.18.3 Parameter Display

Indication or readouts of the lubricating-oil pressure, ac voltmeter, ac ammeter, frequency meter, and coolant temperature.

## 2.19 SURGE PROTECTION

Electrical and electronic components shall be protected from, or designed to withstand the effects of surges from switching and lightning.

## 2.20 MANUAL ENGINE GENERATOR SET SYSTEM OPERATION

Complete facilities shall be provided for manual starting and testing of each set without load, loading and unloading of each set.

## 2.21 BASE

The base shall be constructed of steel. The base shall be designed to rigidly support the engine-generator set, ensure permanent alignment of all rotating parts, be arranged to provide easy access to allow changing of lube-oil, and ensure that alignment will be maintained during shipping and normal operation. The base shall permit skidding in any direction during installation and shall be provided with suitable holes for foundation bolts. The base shall also withstand and mitigate the effects of synchronous vibration of the engine and generator, and shall be provided with suitable holes for anchor bolts and jacking screws for leveling.

## 2.22 PAINTING AND FINISHING

The engine-generator set shall be cleaned, primed and painted in accordance with the manufacturer's standard color and practice.

## 2.23 FACTORY INSPECTION AND TESTS

Factory inspection and tests shall be performed on each engine-generator set proposed to meet this specification section. Inspections shall be completed and necessary repairs made prior to testing. Inspectors shall look for leaks, looseness, defects in components, and proper assembly. Factory tests shall be NEMA MG 1 routine tests and the manufacturers routine tests.

# PART 3 EXECUTION

## 3.1 GENERAL INSTALLATION

Installation shall provide clear space for operation and maintenance in accordance with NFPA 70 and IEEE C2. Installation of pipe, duct, conduit, and ancillary equipment shall be configured to facilitate easy removal and replacement of major components and parts of the engine-generator set.

## 3.2 PIPING INSTALLATION

### 3.2.1 General

Piping shall be welded. Connections at valves shall be flanged. Connections at equipment shall be flanged except that connections to the diesel engine may be threaded if the diesel-engine manufacturer's standard connection is threaded. Except as otherwise specified, flanged fittings shall be utilized to allow for complete dismantling and removal of each piping system from the facility without disconnecting or removing any portion of any other system's equipment or piping. Connections to all equipment shall be made with flexible connectors. Pipes extending through the roof shall be properly flashed. Piping shall be installed clear of windows, doors, and openings to permit thermal expansion and contraction

without damage to joints or hangers, and with a 1/2 inch drain valve at each low point.

3.2.2 Supports

Hangers, inserts, and supports shall be of sufficient size to accommodate any insulation and shall conform to MSS SP-58 and MSS SP-69. Supports shall be spaced not more than 7 feet on center for pipes 2 inches in diameter or less, not more than 12 feet on center for pipes larger than 2 inches but no larger than 4 inches, and not more than 17 feet on center for pipes larger than 4 inches in diameter. Supports shall be provided at pipe bends or change of direction.

3.2.3 Flanged Joints

Flanges shall be 125 pound type, drilled, and of the proper size and configuration to match equipment and diesel-engine connections. Gaskets shall be factory cut in one piece 1/16 inch thick.

3.2.4 Cleaning

After fabrication and before assembly, piping interiors shall be manually wiped clean of all debris.

3.2.5 Pipe Sleeves

Pipes passing through construction such as ceilings, floors, or walls shall be fitted with sleeves. Each sleeve shall extend through and be securely fastened in its respective structure and shall be cut flush with each surface. The structure shall be built tightly to the sleeve. The inside diameter of each sleeve shall be 1/2 inch, and where pipes pass through combustible materials, 1 inch larger than the outside diameter of the passing pipe or pipe covering.

3.3 ELECTRICAL INSTALLATION

Electrical installation shall comply with NFPA 70, IEEE C2, and Section 16415A ELECTRICAL WORK, INTERIOR.

3.3.1 Vibration Isolation

Flexible fittings shall be provided for all conduit, cable trays, and raceways attached to engine-generator sets. Metallic conductor cables installed on the engine generator set and from the engine generator set to equipment not mounted on the engine generator set shall be flexible stranded conductor. Terminations of conductors on the engine generator set shall be crimp-type terminals or lugs.

3.4 FIELD PAINTING

Field painting shall be as specified in Section 09900 PAINTS AND COATINGS.

3.5 ONSITE INSPECTION AND TESTS

3.5.1 Test Conditions

3.5.1.1 Data

Measurements shall be made and recorded of parameters necessary to verify

that each set meets specified parameters. If the results of any test step are not satisfactory, adjustments or replacements shall be made and the step repeated until satisfactory results are obtained. Unless otherwise indicated, data shall be taken during engine-generator set operation and recorded in 15 minute intervals and shall include: readings of engine-generator set meters and gauges for electrical and power parameters; oil pressure; ambient temperature; and engine temperatures available from meters and gauges supplied as permanent equipment on the engine-generator set. In the following tests where measurements are to be recorded after stabilization of an engine-generator set parameter (voltage, frequency, current, temperature, etc.), stabilization is considered to have occurred when measurements are maintained within the specified bandwidths or tolerances, for a minimum of four consecutive readings. Electrical measurements shall be performed in accordance with IEEE Std 120. Definitions and terms are in accordance with IEEE Std 100. Temperature limits in the rating of electrical equipment and for the evaluation of electrical insulation shall be in accordance with IEEE Std 1.

3.5.1.2 Power Factor

Engine-generator set operating tests shall be made utilizing a load with the power factor specified in the engine generator set parameter schedule.

3.5.1.3 Contractor Supplied Items

The Contractor shall provide all equipment and supplies required for inspections and tests including fuel, test instruments, and loadbanks at the specified power factors.

3.5.1.4 Instruments

Readings of panel gauges, meters, displays, and instruments, provided under this specification shall be verified during test runs by test instruments of precision and accuracy greater than the tested items. Test instrument accuracy shall be at least as follows: current, 1.5%; voltage, 1.5%; real power, 1.5%; reactive power, 1.5%; power factor, 3%; frequency, 0.5%. Test instruments shall be calibrated by a recognized standards laboratory within 90 days prior to testing.

3.5.1.5 Sequence

The sequence of testing shall be as specified in the approved testing plan unless variance in authorized by the Contracting Officer. Field testing shall be performed in the presence of the Contracting Officer. Tests may be scheduled and sequenced in order to optimize run-time periods; however the following general order of testing shall be followed: Construction Tests; Inspections; Safety run Tests; and Performance Tests and Final Inspection.

3.5.2 Construction Tests

Individual component and equipment functional tests for fuel piping, coolant piping, and lubricating-oil piping, electrical circuit continuity, insulation resistance, circuit protective devices, and equipment not provided by the engine-generator set manufacturer shall be performed prior to connection to the engine-generator set.

3.5.2.1 Piping Test

a. Lube-oil and fuel-oil piping shall be flushed with the same type of fluid intended to flow through the piping, until the outflowing fluid has no obvious sediment or emulsion.

b. Fuel piping which is external to the engine-generator set shall be tested in accordance with NFPA 30. All remaining piping which is external to the engine generator set shall be pressure tested with air pressure at 150% of the maximum anticipated working pressure, but in no case less than 150 psig, for a period of 2 hours to prove the piping has no leaks. If piping is to be insulated, the test shall be performed before the insulation is applied.

3.5.2.2 Electrical Equipment Tests

a. Low-voltage cable insulation integrity tests shall be performed for cables connecting the generator breaker to the distribution bus. Low-voltage cable, complete with splices, shall be tested for insulation resistance after the cables are installed, in their final configuration, ready for connection to the equipment, and prior to energization. The test voltage shall be 500 volts dc, applied for one minute between each conductor and ground and between all possible combinations conductors in the same trench, duct, or cable, with all other conductors in the same trench, duct, or conduit. The minimum value of insulation shall be:

R in megohms = (rated voltage in kV + 1) x 304,800/(length of cable in meters).

(R in megohms = (rated voltage in kV + 1) x 1000/(length of cable in feet)

Each cable failing this test shall be repaired or replaced. The repaired cable shall be retested until failures have been eliminated.

b. Ground-Resistance Tests. The resistance of each grounding electrode system shall be measured using the fall-of-potential method defined in IEEE Std 81. Ground resistance measurements shall be made before the electrical distribution system is energized and shall be made in normally dry conditions not less than 48 hours after the last rainfall. Resistance measurements of separate grounding electrode systems shall be made before the systems are bonded together below grade. The combined resistance of separate systems may be used to meet the required resistance, but the specified number of electrodes must still be provided.

1) Single rod electrode - 25 ohms.
2) Multiple rod electrodes - 25 ohms.
3) Ground mat - 25 ohms.

c. Circuit breakers and switchgear shall be examined and tested in accordance with manufacturer's published instructions for functional testing.

3.5.3 Inspections

The following inspections shall be performed jointly by the Contracting Officer and the Contractor, after complete installation of each engine-generator set and its associated equipment, and prior to startup of the engine-generator set. Checks applicable to the installation shall be performed. The results of those which are physical inspections (I) shall be documented by the Contractor and submitted in accordance with paragraph SUBMITTALS. The Contractor shall present manufacturer's data for the inspections designated (D) at the time of inspection. Inspections shall verify that equipment type, features, accessibility, installation and condition are in accordance with the contract specification. Manufacturer's statements shall certify provision of features which cannot be verified visually.

1. Drive belts. (I)
2. Governor type and features. (I)
3. Engine timing mark. (I)
4. Starting motor. (I)
5. Starting aids. (I)
6. Coolant type and concentration. (D)
7. Radiator drains. (I)
8. Block coolant drains. (I)
9. Coolant fill level. (I)
10. Coolant line connections. (I)
11. Coolant hoses. (I)
12. Combustion air filter. (I)
13. Intake air silencer. (I)
14. Lube oil type. (D)
15. Lube oil drain. (I)
16. Lube-oil filter. (I)
17. Lube-oil-fill level. (I)
18. Lube-oil line connections. (I)
19. Lube-oil lines. (I)
20. Fuel type. (D)
21. Fuel-level. (I)
22. Fuel-line connections. (I)
23. Fuel lines. (I)
24. Fuel filter. (I)
25. Access for maintenance. (I)
26. Voltage regulator. (I)
27. Battery-charger connections. (I)
28. Wiring & terminations. (I)
29. Instrumentation. (I)
30. Hazards to personnel. (I)
31. Base. (I)
32. Nameplates. (I)
33. Paint. (I)
34. Exhaust system. (I)
35. Access provided to controls. (I)
36. Enclosure. (I)
37. Engine & generator mounting bolts (proper application). (I)

3.5.4 Safety Run Tests

a. Perform and record engine manufacturer's recommended prestarting checks and inspections.

b. Start the engine, record the starting time, make and record engine

manufacturer's after-starting checks and inspections during a reasonable warm-up period.

c. Activate the manual emergency stop switch and verify that the engine stops.

d. Remove the high and pre-high lubricating oil temperature sensing elements from the engine and temporarily install temperature gauge in their normal locations on the engine (required for safety, not for recorded data). Where necessary, provide temporary wiring harness to connect the sensing elements to their permanent electrical leads.

e. Start the engine, record the starting time, make and record engine manufacturer's after-starting checks and inspections and operate the engine generator-set at no load until the output voltage and frequency stabilize. Monitor the temporarily installed temperature gauges. If temperature reading exceeds the value for an alarm condition, activate the manual emergency stop switch.

f. Immerse the elements in a vessel containing controlled-temperature hot oil and record the temperature at which the pre-high alarm activates and the temperature at which the engine shuts down. Remove the temporary temperature gauges and reinstall the temperature sensors on the engine.

g. Remove the high and pre-high coolant temperature sensing elements from the engine and temporarily seal their normal location on the engine and temporarily install temperature gauges in their normal locations on the engine (required for safety, not for recorded data). Where necessary provide temporary wiring harness to connect the sensing elements to their permanent electrical leads.

h. Start the engine, record the starting time, make and record engine manufacturer's after-starting checks and inspections and operate the engine generator-set at no load until the output voltage and frequency stabilize.

i. Immerse the elements in a vessel containing controlled-temperature hot oil and record the temperature at which the pre-high alarm activates and the temperature at which the engine shuts down. Remove the temporary temperature gauges and reinstall the temperature sensors on the engine.

j. Start the engine, record the starting time, make and record engine manufacturer's after-starting checks and inspections during a reasonable warm-up period.

k. Operate the engine generator-set for at least 30 minutes at 100 percent of service load.

l. Verify proper operation of the governor and voltage regulator.

m. Verify proper operation and setpoints of gauges and instruments.

n. Verify proper operation of ancillary equipment.

o. Manually adjust the governor to increase engine speed past the overspeed limit. Record the RPM at which the engine shuts down.

p. Start the engine, record the starting time, make and record engine manufacturer's after-starting checks and inspections and operate the engine generator-set for at least 15 minutes at 75 percent of rated load.

q. Shut down the engine. Remove the time-delay low lube oil pressure alarm bypass and try to start the engine. Record the results.

r. Attach a manifold to the engine oil system (at the oil sensor pressure port) that contains a shutoff valve in series with a connection for the engine's oil pressure sensor followed by an oil pressure gauge ending with a bleed valve. The engine's oil pressure sensor shall be moved from the engine to the manifold and its normal location on the engine temporarily sealed. The manifold shutoff valve shall be open and bleed valve closed.

s. Start the engine, record the starting time, make and record all engine manufacturer's after-starting checks and inspections and operate the engine generator-set for at least 15 minutes at 75 percent of service load.

t. Close the manifold shutoff valve. Slowly allow the pressure in the manifold to bleed off through the bleed valve while watching the pressure gauge. Record the pressure at which the engine shuts down. Catch oil spillage from the bleed valve in a container. Add the oil from the container back to the engine, remove the manifold, and reinstall the engine's oil pressure sensor on the engine.

u. Start the engine, record the starting time, make and record all engine manufacturer's after-starting checks and inspections and operate the engine generator-set for at least 15 minutes at 100% of service load. Record the maximum sound level in each frequency band at a distance of 75 feet from the end of the exhaust and air intake piping directly along the path of intake and discharge horizontal piping; or at a radius of 75 feet from the engine at 45 degrees apart in all directions for vertical piping. The measurements should comply with the paragraph SOUND LIMITATIONS. If a sound limiting enclosure is not provided, the muffler and air intake silencer shall be modified or replaced as required to meet the sound limitations of this specification. If the sound limitations can not be obtained by modifying or replacing the muffler and air intact silencer, the contractor shall notify the Contracting Officer and provide a recommendation for meeting the sound limitations.

v. Manually drain off fuel slowly from the day tank to empty it to below the low fuel level limit and record the level at which the audible alarm sounds. Add fuel back to the day tank to fill it above low level alarm limits.

3.5.5 Performance Tests

3.5.5.1 Continuous Engine Load Run Test

The engine-generator set and ancillary systems shall be tested at service

load to: demonstrate durability; verify that heat of extended operation does not adversely affect or cause failure in any part of the system; and check all parts of the system. If the engine load run test is interrupted for any reason, the entire test shall be repeated. The engine load run test shall be accomplished principally during daylight hours. After each change in load in the following test, measure the vibration at the end bearings (front and back of engine, outboard end of generator) in the horizontal, vertical, and axial directions. Verify that the vibration is within the allowable range. Measurements are to be recorded after stabilization of an engine-generator set parameter (voltage, frequency, current, temperature, etc.). Stabilization is considered to have occurred when measurements are maintained within the specified bandwidths or tolerances, for a minimum of four consecutive readings. Data taken at 15 minutes intervals shall include the following:

a. Electrical: Output amperes, voltage, real and reactive power, power factor, frequency.

b. Pressure: Lube-oil.

c. Temperature: Coolant.
Lube-oil.
Ambient.

(1) Perform and record engine manufacturer's recommended prestarting checks and inspections. Include as a minimum checking of coolant fluid, fuel, and lube-oil levels.

(2) Start the engine; make and record engine manufacturer's after-starting checks and inspections during a reasonable warm-up period.

(3) Operate the engine generator-set for at least 2 hours at 75 percent of service load.

(4) Increase load to 100%of service load and operate the engine generator-set for at least 2 hours.

(5) Remove load from the engine-generator set.

3.5.5.2 Load Acceptance Test

Engine manufacturer's recommended prestarting checks and inspections shall be performed and recorded. The engine shall be started, and engine manufacturer's after-starting checks and inspections made and recorded during a reasonable warm-up period. For the following steps, the output line-line and line-neutral voltages and frequency shall be recorded after performing each step instruction (after stabilization of voltage and frequency). Stabilization is considered to have occurred when measurements are maintained within the specified bandwidths or tolerances, for a minimum of four consecutive readings.

a. Apply load in steps no larger than the Maximum Step Load Increase to load the engine-generator set to 100 of Service Load.

b. Verify that the engine-generator set responds to the load addition and that the output voltage returns to and stabilizes within the rated bandwidths.

## 3.6 FINAL INSPECTION AND TESTING

a. Start the engine, record the starting time, make and record all engine manufacturer's after-starting checks and inspections during a reasonable warm-up period.

b. Increase the load in steps no greater than the maximum step load increase to 100% of service load, and operate the engine-generator set for at least 30 minutes. Measure the vibration at the end bearings (front and back of engine, outboard end of generator) in the horizontal, vertical, and axial directions. Verify that the vibration is within the same range as previous measurements and is within the required range.

c. Remove load and shut down the engine-generator set after the recommended cool down period. Perform the pre-test inspections and take necessary corrective actions.

d. Remove the lube oil filter and have the oil and filter examined by the engine manufacturer for excessive metal, abrasive foreign particles, etc. Any corrective action shall be verified for effectiveness by running the engine for 4 hours at service load, then re-examining the oil and filter.

e. Remove the fuel filter and examine the filter for trash, abrasive foreign particles, etc.

f. Visually inspect and check engine and generator mounting bolts for tightness and visible damage.

g. Replace air, oil, and fuel filters with new filters.

## 3.7 MANUFACTURER'S FIELD SERVICE

### 3.7.1 Onsite Training

The Contractor shall conduct training course for operating staff as designated by the Contracting Officer. The training period shall consist of a total 4 hours of normal working time and shall start after the system is functionally completed but prior to final acceptance. The course instructions shall cover pertinent points involved in operating, starting, stopping, servicing the equipment, as well as all major elements of the operation and maintenance manuals. Additionally, the course instructions shall demonstrate all routine maintenance operations such as oil change, oil filter change, and air filter change.

### 3.7.2 Manufacturer's Representative

The engine generator-set manufacturer shall furnish a qualified representative to supervise the installation of the engine generator-set, assist in the performance of the onsite tests, and instruct personnel as to the operational and maintenance features of the equipment.

## 3.8 INSTRUCTIONS

Two sets of instructions shall be typed in 8 1/2 x 11 inches format, laminated in weatherproof plastic, and placed in three-ring vinyl binders. The binders shall be placed as directed by the Contracting Officer. The

instructions shall be in place prior to acceptance of the engine generator set installation. First set of instructions shall include a one-line diagram, wiring and control diagrams and a complete layout of the system. Second set of instructions shall include the condensed operating instructions describing manufacturer's pre-start checklist and precautions; startup procedures for test-mode, manual-start mode, and automatic-start mode (as applicable); running checks, procedures, and precautions; and shutdown procedures, checks, and precautions. Instructions shall include procedures for interrelated equipment (such as heat recovery systems, co-generation, load-shedding, and automatic transfer switches).

## 3.9 ACCEPTANCE

Final acceptance of the engine-generator set will not be given until the Contractor has successfully completed all tests and after all defects in installation material or operation have been corrected.

-- End of Section --

SECTION TABLE OF CONTENTS

DIVISION 16 - ELECTRICAL

SECTION 16375A

ELECTRICAL DISTRIBUTION SYSTEM, UNDERGROUND

**02/02**

PART 1 GENERAL

1.1 REFERENCES
1.2 GENERAL REQUIREMENTS
1.2.1 Terminology
1.2.2 Service Conditions
1.3 SUBMITTALS
1.4 DELIVERY, STORAGE, AND HANDLING
1.5 EXTRA MATERIALS

PART 2 PRODUCTS

2.1 STANDARD PRODUCT
2.2 NAMEPLATES
2.2.1 General
2.2.2 Liquid-Filled Transformer Nameplates
2.3 CORROSION PROTECTION
2.3.1 Aluminum Materials
2.3.2 Ferrous Metal Materials
2.3.2.1 Hardware
2.3.2.2 Equipment
2.3.3 Finishing
2.4 CABLES
2.4.1 Medium-Voltage Cables
2.4.1.1 General
2.4.1.2 Ratings
2.4.1.3 Conductor Material
2.4.1.4 Insulation
2.4.1.5 Shielding
2.4.1.6 Neutrals
2.4.1.7 Jackets
2.4.2 Low-Voltage Cables
2.4.2.1 Conductor Material
2.4.2.2 Insulation
2.4.2.3 Jackets
2.4.2.4 Water Blocked Process Control Cable
2.4.2.5 In Duct
2.5 CABLE JOINTS, TERMINATIONS, AND CONNECTORS
2.5.1 Medium-Voltage Cable Joints
2.5.2 Medium-Voltage Separable Insulated Connectors
2.5.3 Low-Voltage Cable Splices
2.5.4 Terminations
2.5.4.1 Factory Preformed Type
2.5.4.2 Taped Terminations
2.6 CONDUIT AND DUCTS
2.6.1 Metallic Conduit

2.6.2 Nonmetallic Ducts
2.6.2.1 Concrete Encased Ducts
2.6.2.2 Direct Burial
2.6.3 Conduit Sealing Compound
2.7 MANHOLES, HANDHOLES, AND PULLBOXES
2.8 TRANSFORMERS AND SWITCHGEAR
2.8.1 Pad-Mounted Transformers
2.8.1.1 High-Voltage Compartments
2.8.1.2 Load-Break Switch
2.8.1.3 Transformer Tank Sections
2.8.1.4 Low-Voltage Cable Compartments
2.8.1.5 Accessories
2.8.2 Pad-Mounted Switchgear
2.8.2.1 Ratings at 60 Hz shall be:
2.8.2.2 Operators, Devices, and Controls
2.8.2.3 Enclosures
2.9 METERING AND PROTECTIVE DEVICES
2.9.1 Fuses, Medium-Voltage, Including Current-Limiting
2.9.1.1 Construction
2.9.1.2 Ratings
2.9.1.3 E-Rated, Current-Limiting Power Fuses
2.9.1.4 C-Rated, Current-Limiting Power Fuses
2.9.2 Fuses, Low-Voltage, Including Current-Limiting
2.9.2.1 Cartridge Fuses
2.9.2.2 Transformer Circuit Fuses
2.10 SURGE ARRESTERS
2.11 GROUNDING AND BONDING
2.11.1 Driven Ground Rods
2.11.2 Grounding Conductors
2.12 CONCRETE AND REINFORCEMENT
2.13 PADLOCKS
2.14 CABLE FIREPROOFING SYSTEMS
2.14.1 Fireproof Coating
2.14.2 Fireproofing Tape
2.14.3 Plastic Tape
2.15 LIQUID DIELECTRICS
2.16 FACTORY TESTS

PART 3 EXECUTION

3.1 GENERAL INSTALLATION REQUIREMENTS
3.1.1 Conformance to Codes
3.1.2 Verification of Dimensions
3.1.3 Disposal of Liquid Dielectrics
3.2 CABLE AND BUSWAY INSTALLATION
3.2.1 Cable Installation Plan and Procedure
3.2.1.1 Cable Inspection
3.2.1.2 Duct Cleaning
3.2.1.3 Duct Lubrication
3.2.1.4 Cable Installation
3.2.1.5 Cable Installation Plan
3.2.2 Duct Line
3.2.3 Electric Manholes
3.3 CABLE JOINTS
3.4 FIREPROOFING
3.4.1 Tape Method
3.4.2 Sprayable Method
3.5 DUCT LINES
3.5.1 Requirements

3.5.2 Treatment
3.5.3 Concrete Encasement
3.5.4 Nonencased Direct-Burial
3.5.5 Installation of Couplings
3.5.5.1 Plastic Duct
3.5.6 Duct Line Markers
3.6 MANHOLES, HANDHOLES, AND PULLBOXES
3.6.1 General
3.6.2 Electric Manholes
3.6.3 Handholes
3.6.4 Ground Rods
3.7 PAD-MOUNTED EQUIPMENT INSTALLATION
3.7.1 Concrete Pads
3.7.1.1 Construction
3.7.1.2 Concrete and Reinforcement
3.7.1.3 Sealing
3.7.2 Padlocks
3.8 CONNECTIONS TO BUILDINGS
3.9 GROUNDING
3.9.1 Grounding Electrodes
3.9.2 Grounding and Bonding Connections
3.9.3 Grounding and Bonding Conductors
3.9.4 Surge Arrester Grounding
3.9.5 Manhole, Handhole, or Concrete Pullbox Grounding
3.10 FIELD TESTING
3.10.1 General
3.10.2 Safety
3.10.3 Ground-Resistance Tests
3.10.4 Medium-Voltage Cable Test
3.10.5 Low-Voltage Cable Test
3.10.6 Liquid-Filled Transformer Tests
3.10.7 Pre-Energization Services
3.10.8 Operating Tests
3.11 MANUFACTURER'S FIELD SERVICE
3.11.1 Onsite Training
3.11.2 Installation Engineer
3.12 ACCEPTANCE

-- End of Section Table of Contents --

SECTION 16375A

ELECTRICAL DISTRIBUTION SYSTEM, UNDERGROUND
**02/02**

PART 1 GENERAL

1.1 REFERENCES

The publications listed below form a part of this specification to the extent referenced. The publications are referred to in the text by basic designation only.

AMERICAN NATIONAL STANDARDS INSTITUTE (ANSI)

| | |
|---|---|
| ANSI C119.1 | (1986; R 1997) Sealed Insulated Underground Connector Systems Rated 600 Volts |
| ANSI C135.30 | (1988) Zinc-Coated Ferrous Ground Rods for Overhead or Underground Line Construction |
| ANSI C37.46 | (1981; R 1992) Power Fuses and Fuse Disconnecting Switches |
| ANSI C37.72 | (1987)Manually-Operated, Dead-Front Padmounted Switchgear with Load Interrupting Switches and Separable Connectors for Alternating-Current Systems |
| ANSI C57.12.21 | (1995) Requirements for Pad-Mounted, Compartmental-Type, Self-Cooled, Single-Phase Distribution Transformers with High-Voltage Bushings; (High-Voltage, 34 500 Grd Y/19 920 Volts and Below; Low-Voltage, 240/120; 167 kVA and Smaller) |
| ANSI C57.12.26 | (1993) Pad-Mounted Compartmental-Type, Self-Cooled, Three-Phase Distribution Transformers for Use with Separable Insulated High-Voltage Connectors, High-Voltage, 34 500 Grd Y/19 920 Volts and Below; 2500 kVA and Smaller |
| ANSI C57.12.28 | (1999) Switchgear and Transformers -Padmounted Equipment - Enclosure Integrity |
| ANSI C80.1 | (1995) Rigid Steel Conduit - Zinc Coated |

AMERICAN SOCIETY FOR TESTING AND MATERIALS (ASTM)

| | |
|---|---|
| ASTM A 123/A 123M | (2001) Zinc (Hot-Dip Galvanized) Coatings on Iron and Steel Products |
| ASTM A 153/A 153M | (2001) Zinc Coating (Hot-Dip) on Iron and Steel Hardware |

| | |
|---|---|
| ASTM A 48 | (1994ae1) Gray Iron Castings |
| ASTM B 117 | (1997) Operating Salt Spray (Fog) Apparatus |
| ASTM B 3 | (1995) Soft or Annealed Copper Wire |
| ASTM B 496 | (1999) Compact Round Concentric-Lay-Stranded Copper Conductors |
| ASTM B 8 | (1999) Concentric-Lay-Stranded Copper Conductors, Hard, Medium-Hard, or Soft |
| ASTM C 478 | (1997) Precast Reinforced Concrete Manhole Sections |
| ASTM C 478M | (1997) Precast Reinforced Concrete Manhole Sections (Metric) |
| ASTM D 1654 | (1992) Evaluation of Painted or Coated Specimens Subjected to Corrosive Environments |

ASSOCIATION OF EDISON ILLUMINATING COMPANIES (AEIC)

| | |
|---|---|
| AEIC CS5 | (1994; CS5a-1995) Cross-Linked Polyethylene Insulated Shielded Power Cables Rated 5 Through 46 kV |
| AEIC CS6 | (1996) Ethylene Propylene Rubber Insulated Shielded Power Cables Rated 5 Through 69 kV |

FACTORY MUTUAL ENGINEERING AND RESEARCH (FM)

| | |
|---|---|
| FM P7825a | (1998) Approval Guide Fire Protection |

INSTITUTE OF ELECTRICAL AND ELECTRONICS ENGINEERS (IEEE)

| | |
|---|---|
| IEEE C2 | (1997) National Electrical Safety Code |
| IEEE C37.20.1 | (1993) Metal-Enclosed Low-Voltage Power Circuit-Breaker Switchgear |
| IEEE C37.20.2 | (1993; C37.20.2b) Metal-Clad and Station-Type Cubicle Switchgear |
| IEEE C37.20.3 | (1997) Metal-Enclosed Interrupter Switchgear |
| IEEE C57.12.00 | (1993) Standard General Requirements for Liquid-Immersed Distribution, Power, and Regulating Transformers |
| IEEE C57.98 | (1993) Guide for Transformer Impulse Tests \$avail only as part of Distribution, Power, and Regulating Transformers Stds Collection |
| IEEE C62.1 | (1989; R 1994) Surge Arresters for AC |

| | |
|---|---|
| | Power Circuits |
| IEEE C62.11 | (1999) IEEE Standard Metal-Oxide Surge Arresters for AC Power Circuits |
| IEEE C62.2 | (1987; R 1994) Guide for the Application of Gapped Silicon-Carbide Surge Arresters for Alternating Current Systems |
| IEEE Std 100 | (1997) IEEE Standard Dictionary of Electrical and Electronics Terms |
| IEEE Std 386 | (1995) Separable Insulated Connector Systems for Power Distribution Systems Above 600V |
| IEEE Std 404 | (1993) Cable Joints for Use with Extruded Dielectric Cable Rated 5000 V Through 138 000 V and Cable Joints for Use with Laminated Dielectric Cable Rated 2500 V Through 500 000 V |
| IEEE Std 48 | (1998) Standard Test Procedures and Requirements for Alternating-Current Cable Terminations 2.5 kV through 765 kV |
| IEEE Std 592 | (1990; R 1996) Exposed Semiconducting Shields on Premolded High Voltage Cable Joints and Separable Insulated Connectors |
| IEEE Std 81 | (1983) Guide for Measuring Earth Resistivity, Ground Impedance, and Earth Surface Potentials of a Ground System (Part 1) \$31.00$\F |

NATIONAL ELECTRICAL MANUFACTURERS ASSOCIATION (NEMA)

| | |
|---|---|
| NEMA FB 1 | (1993) Fittings, Cast Metal Boxes, and Conduit Bodies for Conduit and Cable Assemblies |
| NEMA FU 1 | (1986) Low Voltage Cartridge Fuses |
| NEMA LA 1 | (1992) Surge Arresters |
| NEMA TC 6 | (1990) PVC and ABS Plastic Utilities Duct for Underground Installation |
| NEMA WC 7 | (1988; Rev 3 1996) Cross-Linked-Thermosetting-Polyethylene-Insulated Wire and Cable for the Transmission and Distribution of Electrical Energy |
| NEMA WC 8 | (1988; Rev 3 1996) Ethylene-Propylene-Rubber-Insulated Wire and Cable for the Transmission and Distribution of Electrical Energy |

NATIONAL FIRE PROTECTION ASSOCIATION (NFPA)

| | |
|---|---|
| NFPA 70 | (2002) National Electrical Code |

UNDERWRITERS LABORATORIES (UL)

| | |
|---|---|
| UL 1072 | (1995; Rev Mar 1998) Medium Voltage Power Cables |
| UL 1242 | (1996; Rev Mar 1998) Intermediate Metal Conduit |
| UL 467 | (1993; Rev thru Apr 1999) Grounding and Bonding Equipment |
| UL 486A | (1997; Rev thru Dec 1998) Wire Connectors and Soldering Lugs for Use with Copper Conductors |
| UL 486B | (1997; Rev Jun 1997) Wire Connectors for Use with Aluminum Conductors |
| UL 510 | (1994; Rev thru Apr 1998) Polyvinyl Chloride, Polyethylene, and Rubber Insulating Tape |
| UL 514A | (1996; Rev Dec 1999) Metallic Outlet Boxes |
| UL 6 | (1997) Rigid Metal Conduit |
| UL 651 | (1995; Rev thru Oct 1998) Schedule 40 and 80 Rigid PVC Conduit |

## 1.2 GENERAL REQUIREMENTS

### 1.2.1 Terminology

Terminology used in this specification is as defined in IEEE Std 100.

### 1.2.2 Service Conditions

Items provided under this section shall be specifically suitable for the following service conditions. Seismic details shall

a. Altitude 26 feet

b. Ambient Temperature 93 degrees F

## 1.3 SUBMITTALS

Government approval is required for submittals with a "G" designation; submittals not having a "G" designation are for information only. When used, a designation following the "G" designation identifies the office that will review the submittal for the Government. The following shall be submitted in accordance with Section 01330 SUBMITTAL PROCEDURES:

SD-02 Shop Drawings

Electrical Distribution System; G-AE,

Detail drawings consisting of equipment drawings, illustrations, schedules, instructions, diagrams manufacturers standard installation drawings and other information necessary to define the installation and enable the Government to check conformity with the requirements of the contract drawings.

If departures from the contract drawings are deemed necessary by the Contractor, complete details of such departures shall be included with the detail drawings. Approved departures shall be made at no additional cost to the Government.

Detail drawings shall show how components are assembled, function together and how they will be installed on the project. Data and drawings for component parts of an item or system shall be coordinated and submitted as a unit. Data and drawings shall be coordinated and included in a single submission. Multiple submissions for the same equipment or system are not acceptable except where prior approval has been obtained from the Contracting Officer. In such cases, a list of data to be submitted later shall be included with the first submission. Detail drawings shall consist of the following:

a. Detail drawings showing physical arrangement, construction details, connections, finishes, materials used in fabrication, provisions for conduit or busway entrance, access requirements for installation and maintenance, physical size, electrical characteristics, foundation and support details, and equipment weight. Drawings shall be drawn to scale and/or dimensioned. All optional items shall be clearly identified as included or excluded.

b. Internal wiring diagrams of equipment showing wiring as actually provided for this project. External wiring connections shall be clearly identified.

Detail drawings shall as a minimum depict the installation of the following items:

a. Medium-voltage cables and accessories including cable installation plan.

b. Transformers.

c. Pad-mounted switchgear.

d. Surge arresters.

As-Built Drawings; G-AE,

The as-built drawings shall be a record of the construction as installed. The drawings shall include the information shown on the contract drawings as well as deviations, modifications, and changes from the contract drawings, however minor. The as-built drawings shall be a full sized set of prints marked to reflect deviations, modifications, and changes. The as-built drawings shall be complete and show the location, size, dimensions, part identification, and other information. Additional sheets may be

added. The as-built drawings shall be jointly inspected for accuracy and completeness by the Contractor's quality control representative and by the Contracting Officer prior to the submission of each monthly pay estimate. Upon completion of the work, the Contractor shall provide three full sized sets of the marked prints to the Contracting Officer for approval. If upon review, the as-built drawings are found to contain errors and/or omissions, they will be returned to the Contractor for correction. The Contractor shall correct and return the as-built drawings to the Contracting Officer for approval within 10 calendar days from the time the drawings are returned to the Contractor.

SD-03 Product Data

Nameplates; G-AE

Catalog cuts, brochures, circulars, specifications, product data, and printed information in sufficient detail and scope to verify compliance with the requirements of the contract documents.

Material and Equipment

A complete itemized listing of equipment and materials proposed for incorporation into the work. Each entry shall include an item number, the quantity of items proposed, and the name of the manufacturer of each such item.

General Installation Requirements; G-RE

As a minimum, installation procedures for transformers, switchgear, and medium-voltage cable terminations and splices.

Procedures shall include cable pulling plans, diagrams, instructions, and precautions required to install, adjust, calibrate, and test the devices and equipment.

SD-06 Test Reports

Factory Tests; G-AE

Certified factory test reports shall be submitted when the manufacturer performs routine factory tests, including tests required by standards listed in paragraph REFERENCES. Results of factory tests performed shall be certified by the manufacturer, or an approved testing laboratory, and submitted within 7 days following successful completion of the tests. The manufacturer's pass-fail criteria for tests specified in paragraph FIELD TESTING shall be included.

Field Testing; G-AO, G-AE

A proposed field test plan, 20 days prior to testing the installed system. No field test shall be performed until the test plan is approved. The test plan shall consist of complete field test procedures including tests to be performed, test equipment required, and tolerance limits.

Operating Tests; G-AE

Six copies of the information described below in 8-1/2 by 11 inch binders having a minimum of three rings, including a separate section for each test. Sections shall be separated by heavy plastic dividers with tabs.

a. A list of equipment used, with calibration certifications.

b. A copy of measurements taken.

c. The dates of testing.

d. The equipment and values to be verified.

e. The condition specified for the test.

f. The test results, signed and dated.

g. A description of adjustments made.

Cable Installation; G-AE,

Six copies of the information described below in 8-1/2 by 11 inch binders having a minimum of three rings from which material may readily be removed and replaced, including a separate section for each cable pull. Sections shall be separated by heavy plastic dividers with tabs, with all data sheets signed and dated by the person supervising the pull.

a. Site layout drawing with cable pulls numerically identified.

b. A list of equipment used, with calibration certifications. The manufacturer and quantity of lubricant used on pull.

c. The cable manufacturer and type of cable.

d. The dates of cable pulls, time of day, and ambient temperature.

e. The length of cable pull and calculated cable pulling tensions.

f. The actual cable pulling tensions encountered during pull.

SD-07 Certificates

Material and Equipment; G-AE

Where materials or equipment are specified to conform to the standards of the Underwriters Laboratories (UL) or to be constructed or tested, or both, in accordance with the standards of the American National Standards Institute (ANSI), the Institute of Electrical and Electronics Engineers (IEEE), or the National Electrical Manufacturers Association (NEMA), the Contractor shall submit proof that the items provided conform to such requirements. The label of, or listing by, UL will be acceptable as evidence that the items conform. Either a certification or a published catalog specification data statement, to the effect that the item is in accordance with the referenced ANSI or IEEE standard, will be acceptable as evidence that the item conforms. A similar

certification or published catalog specification data statement to the effect that the item is in accordance with the referenced NEMA standard, by a company listed as a member company of NEMA, will be acceptable as evidence that the item conforms. In lieu of such certification or published data, the Contractor may submit a certificate from a recognized testing agency equipped and competent to perform such services, stating that the items have been tested and that they conform to the requirements listed, including methods of testing of the specified agencies. Compliance with above-named requirements does not relieve the Contractor from compliance with any other requirements of the specifications.

Cable Joints; G-AO

A certification that contains the names and the qualifications of people recommended to perform the splicing and termination of medium-voltage cables approved for installation under this contract. The certification shall indicate that any person recommended to perform actual splicing and terminations has been adequately trained in the proper techniques and have had at least three recent years of experience in splicing and terminating the same or similar types of cables approved for installation. In addition, any person recommended by the Contractor may be required to perform a practice splice and termination, in the presence of the Contracting Officer, before being approved as a qualified installer of medium-voltage cables. If that additional requirement is imposed, the Contractor shall provide short sections of the approved types of cables along with the approved type of splice and termination kits, and detailed manufacturer's instruction for the proper splicing and termination of the approved cable types.

Cable Installer Qualifications; G-AO

The Contractor shall provide at least one onsite person in a supervisory position with a documentable level of competency and experience to supervise all cable pulling operations. A resume shall be provided showing the cable installers' experience in the last three years, including a list of references complete with points of contact, addresses and telephone numbers.

SD-10 Operation and Maintenance Data

Electrical Distribution System; G-AE

Six copies of operation and maintenance manuals, within 7 calendar days following the completion of tests and including assembly, installation, operation and maintenance instructions, spare parts data which provides supplier name, current cost, catalog order number, and a recommended list of spare parts to be stocked. Manuals shall also include data outlining detailed procedures for system startup and operation, and a troubleshooting guide which lists possible operational problems and corrective action to be taken. A brief description of all equipment, basic operating features, and routine maintenance requirements shall also be included. Documents shall be bound in a binder marked or identified on the spine and front cover. A table of contents page shall be included and marked with pertinent contract information

and contents of the manual. Tabs shall be provided to separate different types of documents, such as catalog ordering information, drawings, instructions, and spare parts data. Index sheets shall be provided for each section of the manual when warranted by the quantity of documents included under separate tabs or dividers.

Three additional copies of the instructions manual shall be provided within 30 calendar days following the manuals.

## 1.4 DELIVERY, STORAGE, AND HANDLING

Devices and equipment shall be visually inspected by the Contractor when received and prior to acceptance from conveyance. Stored items shall be protected from the environment in accordance with the manufacturer's published instructions. Damaged items shall be replaced. Oil filled transformers and switches shall be stored in accordance with the manufacturer's requirements. Metal poles shall be handled and stored in accordance with the manufacturer's instructions.

## 1.5 EXTRA MATERIALS

One additional spare fuse or fuse element for each furnished fuse or fuse element shall be delivered to the contracting officer when the electrical system is accepted. Two complete sets of all special tools required for maintenance shall be provided, complete with a suitable tool box. Special tools are those that only the manufacturer provides, for special purposes (to access compartments, or operate, adjust, or maintain special parts).

# PART 2 PRODUCTS

## 2.1 STANDARD PRODUCT

Material and equipment shall be the standard product of a manufacturer regularly engaged in the manufacture of the product and shall essentially duplicate items that have been in satisfactory use for at least 2 years prior to bid opening. Items of the same classification shall be identical including equipment, assemblies, parts, and components.

## 2.2 NAMEPLATES

### 2.2.1 General

Each major component of this specification shall have the manufacturer's name, address, type or style, model or serial number, and catalog number on a nameplate securely attached to the equipment. Nameplates shall be made of noncorrosive metal. Equipment containing liquid dielectrics shall have the type of dielectric on the nameplate. Sectionalizer switch nameplates shall have a schematic with all switch positions shown and labeled. As a minimum, nameplates shall be provided for transformers, circuit breakers, meters, switches, and switchgear.

### 2.2.2 Liquid-Filled Transformer Nameplates

Power transformers shall be provided with nameplate information in accordance with IEEE C57.12.00. Nameplates shall indicate the number of gallons and composition of liquid-dielectric, and shall be permanently marked with a statement that the transformer dielectric to be supplied is non-polychlorinated biphenyl. If transformer nameplate is not so marked,

the Contractor shall furnish manufacturer's certification for each transformer that the dielectric is non-PCB classified, with less than 2 ppm PCB content in accordance with paragraph LIQUID DIELECTRICS. Certifications shall be related to serial numbers on transformer nameplates. Transformer dielectric exceeding the 2 ppm PCB content or transformers without certification will be considered as PCB insulated and will not be accepted.

## 2.3 CORROSION PROTECTION

### 2.3.1 Aluminum Materials

Aluminum shall not be used.

### 2.3.2 Ferrous Metal Materials

#### 2.3.2.1 Hardware

Ferrous metal hardware shall be hot-dip galvanized in accordance with ASTM A 153/A 153M and ASTM A 123/A 123M.

#### 2.3.2.2 Equipment

Equipment and component items, including but not limited to transformer stations and ferrous metal luminaries not hot-dip galvanized or porcelain enamel finished, shall be provided with corrosion-resistant finishes which shall withstand 120 hours of exposure to the salt spray test specified in ASTM B 117 without loss of paint or release of adhesion of the paint primer coat to the metal surface in excess of 1/16 inch from the test mark. The scribed test mark and test evaluation shall be in accordance with ASTM D 1654 with a rating of not less than 7 in accordance with TABLE 1, (procedure A). Cut edges or otherwise damaged surfaces of hot-dip galvanized sheet steel or mill galvanized sheet steel shall be coated with a zinc rich paint conforming to the manufacturer's standard.

### 2.3.3 Finishing

Painting required for surfaces not otherwise specified and finish painting of items only primed at the factory shall be as specified in Section 09900 PAINTS AND COATINGS.

## 2.4 CABLES

Cables shall be single conductor type unless otherwise indicated.

### 2.4.1 Medium-Voltage Cables

#### 2.4.1.1 General

Cable construction shall be Type MV, conforming to NFPA 70 and UL 1072 . Cables shall be manufactured for use in duct applications.

#### 2.4.1.2 Ratings

Cables shall be rated for a circuit voltage of35 kV.

#### 2.4.1.3 Conductor Material

Underground cables shall be soft drawn copper complying with ASTM B 3 and

ASTM B 8 for regular concentric and compressed stranding or ASTM B 496 for compact stranding.

2.4.1.4 Insulation

Cable insulation shall be ethylene-propylene-rubber (EPR) insulation conforming to the requirements of NEMA WC 8 and AEIC CS6. A 133 percent insulation level shall be used on 5 kV, 15 kV and 25 kV rated cables. The Contractor shall comply with EPA requirements in accordance with Section 01670 RECYCLED / RECOVERED MATERIALS.

2.4.1.5 Shielding

Cables rated for 2 kV and above shall have a semiconducting conductor shield, a semiconducting insulation shield, and an overall copper tape shield for each phase.

2.4.1.6 Neutrals

Neutral conductors of shall be copper, employing the same insulation and jacket materials as phase conductors, except that a 600-volt insulation rating is acceptable.

2.4.1.7 Jackets

Cables shall be provided with a polyethylene jacket. Direct buried cables shall be rated for direct burial.

2.4.2 Low-Voltage Cables

Cables shall be rated 600 volts and shall conform to the requirements of NFPA 70, and must be UL listed for the application or meet the applicable section of either ICEA or NEMA standards.

2.4.2.1 Conductor Material

Underground cables shall be annealed copper complying with ASTM B 3 and ASTM B 8. Intermixing of copper and aluminum conductors is not permitted.

2.4.2.2 Insulation

Insulation must be in accordance with NFPA 70, and must be UL listed for the application or meet the applicable sections of either ICEA, or NEMA standards.

2.4.2.3 Jackets

Multiconductor cables shall have an overall PVC outer jacket.

2.4.2.4 Water Blocked Process Control Cable

Multiconductor cable used for emergency fuel shutoff (ESS) circuits shall be aquaseal type as manufactured by West Penn or approved equal. Cable shall be multiconductor, power-limited tray cable, 300 v, NEC type FPL or PLTC, UL listed 1424 and 13. Copper conductor shall be size as indicated. Number of conductors as indicated. Provide PVC insulation with overall PVC jacket. Tape wrap conductor used for ground at each termination with green tape.

2.4.2.5 In Duct

Cables shall be single-conductor cable, in accordance with NFPA 70.

## 2.5 CABLE JOINTS, TERMINATIONS, AND CONNECTORS

### 2.5.1 Medium-Voltage Cable Joints

Medium-voltage cable joints shall comply with IEEE Std 404 and IEEE Std 592. Medium-voltage cable terminations shall comply with IEEE Std 48. Joints shall be the standard products of a manufacturer and shall be either of the factory preformed type or of the kit type containing tapes and other required parts. Joints shall have ratings not less than the ratings of the cables on which they are installed. Splice kits may be of the heat-shrinkable type for voltages up to 15 kV, of the premolded splice and connector type, the conventional taped type, or the resin pressure-filled overcast taped type for voltages up to 35 kV; except that for voltages of 7.5 kV or less a resin pressure-filled type utilizing a plastic-tape mold is acceptable. Joints used in manholes, handholes, vaults and pull boxes shall be certified by the manufacturer for waterproof, submersible applications.

### 2.5.2 Medium-Voltage Separable Insulated Connectors

Separable insulated connectors shall comply with IEEE Std 386 and IEEE Std 592 and shall be of suitable construction or standard splice kits shall be used. Separable insulated connectors are acceptable for voltages up to 35 kV. Connectors shall be of the loadbreak type as indicated, of suitable construction for the application and the type of cable connected, and shall include cable shield adaptors. Separable insulated connectors shall not be used as substitutes for conventional permanent splices. External clamping points and test points shall be provided.

### 2.5.3 Low-Voltage Cable Splices

Low-voltage cable splices and terminations shall be rated at not less than 600 Volts. Splices in conductors No. 10 AWG and smaller shall be made with an insulated, solderless, pressure type connector, conforming to the applicable requirements of UL 486A. Splices in conductors No. 8 AWG and larger shall be made with noninsulated, solderless, pressure type connector, conforming to the applicable requirements of UL 486A and UL 486B. Splices shall then be covered with an insulation and jacket material equivalent to the conductor insulation and jacket. Splices below grade or in wet locations shall be sealed type conforming to ANSI C119.1 or shall be waterproofed by a sealant-filled, thick wall, heat shrinkable, thermosetting tubing or by pouring a thermosetting resin into a mold that surrounds the joined conductors.

### 2.5.4 Terminations

Terminations shall be in accordance with IEEE Std 48, Class 1 or Class 2; of the molded elastomer, wet-process porcelain, prestretched elastomer, heat-shrinkable elastomer, or taped type. Acceptable elastomers are track-resistant silicone rubber or track-resistant ethylene propylene compounds, such as ethylene propylene rubber or ethylene propylene diene monomer. Separable insulated connectors may be used for apparatus terminations, when such apparatus is provided with suitable bushings. Terminations shall be of the outdoor type, except that where installed inside outdoor equipment housings which are sealed against normal

infiltration of moisture and outside air, indoor, Class 2 terminations are acceptable. Class 3 terminations are not acceptable. Terminations, where required, shall be provided with mounting brackets suitable for the intended installation and with grounding provisions for the cable shielding, metallic sheath, and armor.

2.5.4.1 Factory Preformed Type

Molded elastomer, wet-process porcelain, prestretched, and heat-shrinkable terminations shall utilize factory preformed components to the maximum extent practicable rather than tape build-up. Terminations shall have basic impulse levels as required for the system voltage level.

2.5.4.2 Taped Terminations

Taped terminations shall use standard termination kits providing terminal connectors, field-fabricated stress cones, and rain hoods. Terminations shall be at least 20 inches long from the end of the tapered cable jacket to the start of the terminal connector, or not less than the kit manufacturer's recommendations, whichever is greater.

2.6 CONDUIT AND DUCTS

Duct lines shall be concrete-encased, thin-wall type for duct lines between manholes and for other medium-voltage lines.Low-voltage lines run elsewhere may be direct-burial, thick-wall type.

2.6.1 Metallic Conduit

Intermediate metal conduit shall comply with UL 1242. Rigid galvanized steel conduit shall comply with UL 6 and ANSI C80.1. Metallic conduit fittings and outlets shall comply with UL 514A and NEMA FB 1.

2.6.2 Nonmetallic Ducts

2.6.2.1 Concrete Encased Ducts

UL 651 Schedule 40 or NEMA TC 6 Type EB.

2.6.2.2 Direct Burial

UL 651 Schedule 80.

2.6.3 Conduit Sealing Compound

Compounds for sealing ducts and conduit shall have a putty-like consistency workable with the hands at temperatures as low as 35 degrees F, shall neither slump at a temperature of 300 degrees F, nor harden materially when exposed to the air. Compounds shall adhere to clean surfaces of fiber or plastic ducts; metallic conduits or conduit coatings; concrete, masonry, or lead; any cable sheaths, jackets, covers, or insulation materials; and the common metals. Compounds shall form a seal without dissolving, noticeably changing characteristics, or removing any of the ingredients. Compounds shall have no injurious effect upon the hands of workmen or upon materials.

2.7 MANHOLES, HANDHOLES, AND PULLBOXES

Manholes, handholes, and pullboxes shall be as indicated. Strength of manholes, handholes, and pullboxes and their frames and covers shall

conform to the requirements of IEEE C2. Precast-concrete manholes shall have the required strength established by ASTM C 478, ASTM C 478M. Frames and covers shall be made of gray cast iron and a machine-finished seat shall be provided to ensure a matching joint between frame and cover. Cast iron shall comply with ASTM A 48, Class 30B, minimum. Handholes for low voltage cables installed in parking lots, sidewalks, and turfed areas shall be fabricated from an aggregate consisting of sand and with continuous woven glass strands having an overall compressive strength of at least 10,000 psi and a flexural strength of at least5,000 psi. Pullbox and handhole covers in sidewalks, and turfed areas shall be of the same material as the box. Concrete pullboxes shall consist of precast reinforced concrete boxes, extensions, bases, and covers.

## 2.8 TRANSFORMERS AND SWITCHGEAR

Transformers and switchgear shall be of the outdoor type having the ratings and arrangements indicated. Medium-voltage ratings of cable terminations shall be 35 kV between phases for 133 percent insulation level.

### 2.8.1 Pad-Mounted Transformers

Pad-mounted transformers shall comply with ANSI C57.12.26 and shall be of the loop feed type. Pad-mounted transformer stations shall be assembled and coordinated by one manufacturer and each transformer station shall be shipped as a complete unit so that field installation requirements are limited to mounting each unit on a concrete pad and connecting it to primary and secondary lines. Stainless steel pins and hinges shall be provided. Barriers shall be provided between high- and low-voltage compartments. High-voltage compartment doors shall be interlocked with low-voltage compartment doors to prevent access to any high-voltage section unless its associated low-voltage section door has first been opened. Compartments shall be sized to meet the specific dimensional requirements of ANSI C57.12.26. Pentahead locking bolts shall be provided with provisions for a padlock. Paint enclosure Langley Brown, Federal Spec number 595a, 20100.

#### 2.8.1.1 High-Voltage Compartments

The high-voltage compartment shall be dead-front construction. Primary switching and protective devices shall include loadbreak switching, oil-immersed, current-limiting, bayonet-type fuses, medium-voltage separable loadbreak connectors, universal bushing wells and inserts or integral one piece bushings and surge arresters. Fuses shall comply with the requirements of paragraph METERING AND PROTECTIVE DEVICES. The switch shall be mounted inside transformer tank with switch operating handle located in high-voltage compartment and equipped with metal loop for hook stick operation. Fuses shall be interlocked with switches so that fuses can be removed only when the associated switch is in the "OPEN" position. Adjacent to medium-voltage cable connections, a nameplate or equivalent stencilled inscription shall be provided inscribed "DO NOT OPEN CABLE CONNECTORS UNLESS SWITCH IS OPEN." Surge arresters shall be fully insulated and configured to terminate on a second set of high voltage bushings. The transformer shall have a stainless steel enclosure and tank and shall be factory painted Langley Brown.

#### 2.8.1.2 Load-Break Switch

Provide one radial-feed oil-immersed type 4-way switch rated at 25 kV, 95 kV BIL, with a continuous current rating and load-break rating of 200

ampere, and a make-and-latch rating of 10,000 rms amperes symmetrical. Locate the switch handle in the high-voltage compartment.

2.8.1.3 Transformer Tank Sections

Transformers shall comply with IEEE C57.12.00, ANSI C57.12.21, and ANSI C57.12.26 and shall be of the Envirotemp FR3 fluid type. Transformers shall be suitable for outdoor use and shall have 2 separate windings per phase. Standard NEMA primary taps shall be provided. Where primary taps are not specified, 4, 2-1/2 percent rated kVA high-voltage taps shall be provided 2 above and 2 below below rated, primary voltage. Operating handles for primary tap changers for de-energized operation shall be located within high-voltage compartments, externally to transformer tanks. Adjacent to the tap changer operating handle, a nameplate or equivalent stenciled inscription shall be provided and inscribed "DO NOT OPERATE UNDER LOAD." Transformer ratings at 60 Hz shall be as follows:

Three-phase capacity.....1000 kVA.

Impedance.....5.75%.

Temperature Rise.....65 degrees C.

High-voltage winding.....22,000 volts(zig-zag).

High-voltage winding connections.....delta.

Low-voltage winding.....480/277 volts.

Low-voltage winding connections..... ..... wye

2.8.1.4 Low-Voltage Cable Compartments

Neutrals shall be provided with fully-insulated bushings. Clamp type cable terminations, suitable for copper conductors entering from below, shall be provided as necessary.

2.8.1.5 Accessories

High-voltage warning signs shall be permanently attached to each side of transformer stations. Voltage warning signs shall comply with IEEE C2. Copper-faced steel or stainless steel ground connection pads shall be provided in both the high- and low-voltage compartments. Dial-type thermometer, liquid-level gauge, and drain valve with built-in sampling device shall be provided for each transformer station. Insulated-bushing-type parking stands shall be provided adjacent to each separable load-break elbow to provide for cable isolation during sectionalizing operations.

2.8.2 Pad-Mounted Switchgear

The switchgear shall be configured with 2incoming compartments for loop-feed arrangement, each equipped with air-insulated, load-interrupter switchesas indicated. The outgoing compartments shall be provided with fused disconnects, as indicated.

2.8.2.1 Ratings at 60 Hz shall be:

Nominal voltage (kV).....25.

Rated maximum voltage (kV).....27.

Rated continuous current (A).....600.

Maximum symmetrical interrupting capacity (kA).....25.

Maximum asymmetrical interrupting capacity (kA).....40.

Three-second short-time current-carrying capacity (kA).....40.

BIL (kV).....125.

2.8.2.2 Operators, Devices, and Controls

Operators and controls shall be provided for the switchgear as follows:

a. Switches shall be 3 pole, gauge operated and shall be provided with a manual, handle-type operator or a push-button mechanical spring tripping mechanism, utilizing a stored-energy (spring-driven) mechanism to simultaneously open or close all phases. The switchgear shall be configured so that the switch actuator is padlockable, but may be accessed without opening the switch compartment doors.

b. Fused disconnects shall be hook-stick operated.

c. Provide stainless steel base spacer as required to accommodate surge arrestors. Provide surge arrestors on each switch circuit, 6 total quantity. Surge arrestors shall be 27 kV.

d. Provide ground studs on each switch terminal, each fuse terminal, in each enclosure and an overall ground bracket for bonding entire enclosure to ground loop.

e. Provide key interlock to prohibit opening of either fused compartment until both switched compartments are locked open.

f. Provide (6) sets of fuse end fittings and (6) fuses, size as indicated.

g. This padmount switch replaces an existing Federal Pacific Model PSI/11-6-53212-AS2-B1-B2-F4-G1-G2-Kc-S10-SP padmount switch. In order to simplify installation and minimize downtime to existing service, provide a new Federal Pacific Model PSI/11-9-53212-AS2-B1-B2-F4-G1-G2-Kc-S10-SP padmount switch or approved equivalent. If approved equivalent padmount switch is provided, provide necessary modificatoins to pad, to wiring, terminations and to ground arrangement.

2.8.2.3 Enclosures

Switchgear enclosures shall be of freestanding, self-supporting construction provided with separate incoming and outgoing compartments for each circuit, configured for bottom cable entry. Enclosures shall be of livefront construction, provided with a hinged door for access to each compartment, and conform to the requirements of ANSI C57.12.28, ANSI C37.72, and IEEE C37.20.3, Category A. Provide stainless steel enclosure in Langley Brown color, Federal Spec number 595a, 20100.

## 2.9 METERING AND PROTECTIVE DEVICES

### 2.9.1 Fuses, Medium-Voltage, Including Current-Limiting

#### 2.9.1.1 Construction

Units shall be suitable for outdoor use. Fuses shall have integral blown-fuse indicators. All ratings shall be clearly visible.

#### 2.9.1.2 Ratings

Current-limiting power fuses shall have ratings in accordance with ANSI C37.46 .

#### 2.9.1.3 E-Rated, Current-Limiting Power Fuses

E-rated, current-limiting, power fuses shall conform to ANSI C37.46.

#### 2.9.1.4 C-Rated, Current-Limiting Power Fuses

C-rated, current-limiting power fuses shall open in 1000 seconds at currents between 170 and 240 percent of the C rating.

### 2.9.2 Fuses, Low-Voltage, Including Current-Limiting

Low-voltage fuses shall conform to NEMA FU 1. Time delay and nontime delay options shall be as specified. Equipment provided under this contract shall be provided with a complete set of properly rated fuses when the equipment manufacturer utilizes fuses in the manufacture of the equipment, or if current-limiting fuses are required to be installed to limit the ampere-interrupting capacity of circuit breakers or equipment to less than the maximum available fault current at the location of the equipment to be installed. Fuses shall have a voltage rating of not less than the phase-to-phase circuit voltage, and shall have the time-current characteristics required for effective power system coordination.

#### 2.9.2.1 Cartridge Fuses

Cartridge fuses, current-limiting type, Class RK1 RK5 shall have tested interrupting capacity not less than 100,000 amperes. Fuse holders shall be the type that will reject Class H fuses.

#### 2.9.2.2 Transformer Circuit Fuses

Transformer circuit fuses shall be Class RK1 or RK5, current-limiting, time-delay with 200,000 amperes interrupting capacity.

## 2.10 SURGE ARRESTERS

Surge arresters shall comply with NEMA LA 1, IEEE C62.1, IEEE C62.2, and IEEE C62.11 and shall be provided where indicated. Arresters shall be distribution class, rated as shown. Arresters for use at elevations in excess of 6000 feet above mean sea level shall be specifically rated for that purpose. Arresters shall be equipped with mounting brackets suitable for the indicated installations. Arresters shall be of the metal-oxide varistor type.

## 2.11 GROUNDING AND BONDING

### 2.11.1 Driven Ground Rods

Ground rods shall be copper-clad steel conforming to UL 467. Static ground rods shall be zinc-coated steel conforming to ANSI C135.30and shall be 3/4 inch in diameter by 10 feet in length and shall be specifically installed as shown on the drawings. All other ground rods shall be not less than 3/4 inch in diameter by 8 feet in length. Sectional type rods may be used.

### 2.11.2 Grounding Conductors

Grounding conductors shall be bare, except where installed in conduit with associated phase conductors. Insulated conductors shall be of the same material as phase conductors and green color-coded, except that conductors shall be rated no more than 600 volts. Bare conductors shall be ASTM B 8 soft-drawn unless otherwise indicated. Aluminum is not acceptable.

## 2.12 CONCRETE AND REINFORCEMENT

Concrete work shall have minimum 3000 psi compressive strength and conform to the requirements of Section 03300 CAST-IN-PLACE STRUCTURAL CONCRETE. Concrete reinforcing shall be as specified in Section 03200A CONCRETE REINFORCEMENT.

## 2.13 PADLOCKS

Padlocks shall comply with Section 08710 DOOR HARDWARE.

## 2.14 CABLE FIREPROOFING SYSTEMS

Cable fireproofing systems shall be listed in FM P7825a as a fire-protective coating or tape approved for grouped electrical conductors and shall be suitable for application on the type of medium-voltage cables provided. After being fully cured, materials shall be suitable for use where exposed to oil, water, gases, salt water, sewage, and fungus and shall not damage cable jackets or insulation. Asbestos materials are not acceptable.

### 2.14.1 Fireproof Coating

Cable fireproofing coatings shall be compounded of water-based thermoplastic resins, flame-retardant chemicals, and inorganic noncombustible fibers and shall be suitable for the application methods used. Coatings applied on bundled cables shall have a derating factor of less than 5 percent, and a dielectric strength of 95 volts per mil minimum after curing.

### 2.14.2 Fireproofing Tape

Fireproofing tape shall be at least 2 inches wide and shall be a flexible, conformable, polymeric, elastomer tape designed specifically for fireproofing cables.

### 2.14.3 Plastic Tape

Preapplication plastic tape shall be pressure sensitive, 10 mil thick, conforming to UL 510.

## 2.15 LIQUID DIELECTRICS

Liquid dielectrics for transformers and other liquid-filled electrical equipment shall be Envirotemp FR3 fluid.

## 2.16 FACTORY TESTS

Factory tests shall be performed, as follows, in accordance with the applicable publications and with other requirements of these specifications. The Contracting Officer shall be notified at least 10 days before the equipment is ready for testing. The Contracting Officer reserves the right to witness the tests.

a. Transformers: Manufacturer's standard designand other tests in accordance with IEEE C57.12.00.

b. Transformers rated 200 kVA and above: Reduced full-wave, chopped-wave, and full-wave impulse test on each line and neutral terminal, in accordance with IEEE C57.98.

c. Factory Preformed Terminations: Wet withstand voltage tests in accordance with IEEE Std 48 for the next higher BIL level.

f. Outdoor Switchgear: Manufacturer's standard tests in accordance with IEEE C37.20.1, IEEE C37.20.2, and IEEE C37.20.3.

# PART 3 EXECUTION

## 3.1 GENERAL INSTALLATION REQUIREMENTS

Equipment and devices shall be installed and energized in accordance with the manufacturer's published instructions. Steel conduits installed underground shall be installed and protected from corrosion in conformance with the requirements of Section 16415A ELECTRICAL WORK, INTERIOR. Except as covered herein, excavation, trenching, and backfilling shall conform to the requirements of Section 02316A EXCAVATION, TRENCHING, AND BACKFILLING FOR UTILITIES SYSTEMS. Concrete work shall have minimum 3000 psi compressive strength and conform to the requirements of Section 03300 CAST-IN-PLACE STRUCTURAL CONCRETE.

### 3.1.1 Conformance to Codes

The installation shall comply with the requirements and recommendations of NFPA 70 and IEEE C2 as applicable.

### 3.1.2 Verification of Dimensions

The Contractor shall become familiar with details of the work, shall verify dimensions in the field, and shall advise the Contracting Officer of any discrepancy before performing any work.

### 3.1.3 Disposal of Liquid Dielectrics

PCB-contaminated dielectrics must be marked as PCB and transported to and incinerated by an approved EPA waste disposal facility. The Contractor shall furnish certification of proper disposal. Contaminated dielectrics shall not be diluted to lower the contamination level.

## 3.2 CABLE AND BUSWAY INSTALLATION

The Contractor shall obtain from the manufacturer an installation manual or set of instructions which addresses such aspects as cable construction, insulation type, cable diameter, bending radius, cable temperature, lubricants, coefficient of friction, conduit cleaning, storage procedures, moisture seals, testing for and purging moisture, etc. The Contractor shall then prepare a checklist of significant requirementsperform pulling calculations and prepare a pulling plan which shall be submitted along with the manufacturers instructions in accordance with SUBMITTALS.

### 3.2.1 Cable Installation Plan and Procedure

Cable shall be installed strictly in accordance with the cable manufacturer's recommendations. Each circuit shall be identified by means of a fiber, laminated plastic, or non-ferrous metal tags, or approved equal, in each manhole, handhole, junction box, and each terminal. Each tag shall contain the following information; cable type, conductor size, circuit number, circuit voltage, cable destination and phase identification.

#### 3.2.1.1 Cable Inspection

The cable reel shall be inspected for correct storage positions, signs of physical damage, and broken end seals. If end seal is broken, moisture shall be removed from cable in accordance with the cable manufacturer's recommendations.

#### 3.2.1.2 Duct Cleaning

Duct shall be cleaned with an assembly that consists of a flexible mandrel (manufacturers standard product in lengths recommended for the specific size and type of duct) that is 1/4 inch less than inside diameter of duct, 2 wire brushes, and a rag. The cleaning assembly shall be pulled through conduit a minimum of 2 times or until less than a volume of 8 cubic inches of debris is expelled from the duct.

#### 3.2.1.3 Duct Lubrication

The cable lubricant shall be compatible with the cable jacket for cable that is being installed. Application of lubricant shall be in accordance with lubricant manufacturer's recommendations.

#### 3.2.1.4 Cable Installation

The Contractor shall provide a cable feeding truck and a cable pulling winch as required. The Contractor shall provide a pulling grip or pulling eye in accordance with cable manufacturer's recommendations. The pulling grip or pulling eye apparatus shall be attached to polypropylene or manilla rope followed by lubricant front end packs and then by power cables. A dynamometer shall be used to monitor pulling tension. Pulling tension shall not exceed cable manufacturer's recommendations. The Contractor shall not allow cables to cross over while cables are being fed into duct. For cable installation in cold weather, cables shall be kept at 50 degrees F temperature for at least 24 hours before installation.

#### 3.2.1.5 Cable Installation Plan

The Contractor shall submit a cable installation plan for all cable pulls in accordance with the detail drawings portion of paragraph SUBMITTALS.

Cable installation plan shall include:

a. Site layout drawing with cable pulls identified in numeric order of expected pulling sequence and direction of cable pull.

b. List of cable installation equipment.

c. Lubricant manufacturer's application instructions.

d. Procedure for resealing cable ends to prevent moisture from entering cable.

e. Cable pulling tension calculations of all cable pulls.

f. Cable percentage conduit fill.

g. Cable sidewall thrust pressure.

h. Cable minimum bend radius and minimum diameter of pulling wheels used.

i. Cable jam ratio.

j. Maximum allowable pulling tension on each different type and size of conductor.

k. Maximum allowable pulling tension on pulling device.

### 3.2.2 Duct Line

Cables shall be installed in duct lines where indicated. Cable splices in low-voltage cables shall be made in manholes and handholes only, except as otherwise noted. Cable joints in medium-voltage cables shall be made in manholes or approved pullboxes only. Neutral and grounding conductors shall be installed in the same duct with their associated phase conductors.

### 3.2.3 Electric Manholes

Cables shall be routed around the interior walls and securely supported from walls on cables racks. Cable routing shall minimize cable crossover, provide access space for maintenance and installation of additional cables, and maintain cable separation in accordance with IEEE C2.

## 3.3 CABLE JOINTS

Medium-voltage cable joints shall be made by qualified cable splicers only. Qualifications of cable splicers shall be submitted in accordance with paragraph SUBMITTALS. Shields shall be applied as required to continue the shielding system through each entire cable joint. Shields may be integrally molded parts of preformed joints. Shields shall be grounded at each joint or in accordance with manufacturer's recommended practice. Cable joints shall provide insulation and jacket equivalent to that of the associated cable. Armored cable joints shall be enclosed in compound-filled, cast-iron or alloy, splice boxes equipped with stuffing boxes and armor clamps of a suitable type and size for the cable being installed.

## 3.4 FIREPROOFING

Each medium-voltage cable and conductor in manholes shall be fire-proofed for their entire length within the manhole. Where cables and conductors have been lubricated to enhance pulling into ducts, the lubricant shall be removed from cables and conductors exposed in the manhole before fireproofing.

### 3.4.1 Tape Method

Before application of fireproofing tape, plastic tape wrapping shall be applied over exposed metallic items such as the cable ground wire, metallic outer covering, or armor to minimize the possibility of corrosion from the fireproofing materials and moisture. Before applying fireproofing tape, irregularities of cables, such as at cable joints, shall be evened out with insulation putty. A flexible conformable polymeric elastomer fireproof tape shall be wrapped tightly around each cable spirally in 1/2 lapped wrapping or in 2 butt-jointed wrappings with the second wrapping covering the joints of the first.

### 3.4.2 Sprayable Method

Manholes shall be power ventilated until coatings are dry and dewatered and the coatings are cured. Ventilation requirements shall be in accordance with the manufacturer's instruction, but not less than 10 air changes per hour shall be provided. Cable coatings shall be applied by spray, brush, or glove to a wet film thickness that reduces to the dry film thickness approved for fireproofing by FM P7825a. Application methods and necessary safety precautions shall be in accordance with the manufacturers instructions. After application, cable coatings shall be dry to the touch in 1 to 2 hours and fully cured in 48 hours, except where the manufacturer has stated that because of unusual humidity or temperature, longer periods may be necessary.

## 3.5 DUCT LINES

### 3.5.1 Requirements

Numbers and sizes of ducts shall be as indicated. Duct lines shall be laid with a minimum slope of 4 inches per 100 feet. Depending on the contour of the finished grade, the high-point may be at a terminal, a manhole, a handhole, or between manholes or handholes. Short-radius manufactured 90-degree duct bends may be used only for pole or equipment risers, unless specifically indicated as acceptable. The minimum manufactured bend radius shall be 18 inches for ducts of less than 3 inch diameter, and 36 inches for ducts 3 inches or greater in diameter. Otherwise, long sweep bends having a minimum radius of 25 feet shall be used for a change of direction of more than 5 degrees, either horizontally or vertically. Both curved and straight sections may be used to form long sweep bends, but the maximum curve used shall be 30 degrees and manufactured bends shall be used. Ducts shall be provided with end bells whenever duct lines terminate in manholes or handholes.

### 3.5.2 Treatment

Ducts shall be kept clean of concrete, dirt, or foreign substances during construction. Field cuts requiring tapers shall be made with proper tools and match factory tapers. A coupling recommended by the duct manufacturer shall be used whenever an existing duct is connected to a duct of different

material or shape. Ducts shall be stored to avoid warping and deterioration with ends sufficiently plugged to prevent entry of any water or solid substances. Ducts shall be thoroughly cleaned before being laid. Plastic ducts shall be stored on a flat surface and protected from the direct rays of the sun.

### 3.5.3 Concrete Encasement

Ducts requiring concrete encasements shall comply with NFPA 70, except that electrical duct bank configurations for ducts 6 inches in diameter shall be determined by calculation and as shown on the drawings. The separation between adjacent electric power and communication ducts shall conform to IEEE C2. Duct line encasements shall be monolithic construction. Where a connection is made to a previously poured encasement, the new encasement shall be well bonded or doweled to the existing encasement. The Contractor shall submit proposed bonding method for approval in accordance with the detail drawing portion of paragraph SUBMITTALS. At any point, except railroad and airfield crossings, tops of concrete encasements shall be not less than the cover requirements listed in NFPA 70, nor less than 24" when ducts run under or through hazardous areas. At railroad and airfield crossings, duct lines shall be encased with concrete and reinforced as indicated to withstand specified surface loadings. All concrete encasement and reinforced concrete encasement shall extend a minimum of 5 feet beyond any roadway and/or airfield crossings. Where ducts are jacked under existing pavement, rigid steel conduit will be installed because of its strength. To protect the corrosion-resistant conduit coating, predrilling or installing conduit inside a larger iron pipe sleeve (jack-and-sleeve) is required. For crossings of existing railroads and airfield pavements greater than 50 feet in length, the predrilling method or the jack-and-sleeve method will be used. Separators or spacing blocks shall be made of steel, concrete, plastic, or a combination of these materials placed not farther apart than 4 feet on centers. Ducts shall be securely anchored to prevent movement during the placement of concrete and joints shall be staggered at least 6 inches vertically.

### 3.5.4 Nonencased Direct-Burial

Top of duct lines shall be below the frost line depth but not less than24 inches below finished grade and shall be installed with a minimum of 3 inches of earth around each duct, except that between adjacent electric power and communication ducts, 12 inches of earth is required. Bottoms of trenches shall be graded toward manholes or handholes and shall be smooth and free of stones, soft spots, and sharp objects. Where bottoms of trenches comprise materials other than sand, a 3 inch layer of sand shall be laid first and compacted to approximate densities of surrounding firm soil before installing ducts. Joints in adjacent tiers of duct shall be vertically staggered at least 6 inches. The first 6 inch layer of backfill cover shall be sand compacted as previously specified. The rest of the excavation shall be backfilled and compacted in3 to 6 inch layers. Duct banks may be held in alignment with earth. However, high-tiered banks shall use a wooden frame or equivalent form to hold ducts in alignment prior to backfilling. Do not install non-metallic duct under or running through hazardous locations.

### 3.5.5 Installation of Couplings

Joints in each type of duct shall be made up in accordance with the manufacturer's recommendations for the particular type of duct and coupling selected and as approved.

3.5.5.1 Plastic Duct

Duct joints shall be made by brushing a plastic solvent cement on insides of plastic coupling fittings and on outsides of duct ends. Each duct and fitting shall then be slipped together with a quick 1/4-turn twist to set the joint tightly.

3.5.6 Duct Line Markers

Duct line markers shall be provided at the ends of long duct line stubouts or for other ducts whose locations are indeterminate because of duct curvature or terminations at completely below-grade structures. In addition to markers, a 5 mil brightly colored plastic tape, not less than 3 inches in width and suitably inscribed at not more than 10 feet on centers with a continuous metallic backing and a corrosion-resistant 1 mil metallic foil core to permit easy location of the duct line, shall be placed approximately 12 inches below finished grade levels of such lines.

3.6 MANHOLES, HANDHOLES, AND PULLBOXES

3.6.1 General

Manholes shall be constructed approximately where shown. The exact location of each manhole shall be determined after careful consideration has been given to the location of other utilities, grading, and paving. The location of each manhole shall be approved by the Contracting Officer before construction of the manhole is started. Manholes shall be the type noted on the drawings and shall be constructed in accordance with the applicable details as indicated. Top, walls, and bottom shall consist of reinforced concrete. Walls and bottom shall be of monolithic concrete construction. The Contractor may at his option utilize monolithically constructed precast-concrete manholes having the required strength and inside dimensions as required by the drawings or specifications. In paved areas, frames and covers for manhole and handhole entrances in vehicular traffic areas shall be flush with the finished surface of the paving. In unpaved areas, the top of manhole covers shall be approximately 1/2 inch above the finished grade. Where existing grades that are higher than finished grades are encountered, concrete assemblies designed for the purpose shall be installed to elevate temporarily the manhole cover to existing grade level. All duct lines entering manholes must be installed on compact soil or otherwise supported when entering a manhole to prevent shear stress on the duct at the point of entrance to the manhole. Duct lines entering cast-in-place concrete manholes shall be cast in-place with the manhole. Duct lines entering precast concrete manholes through a precast knockout penetration shall be grouted tight with a portland cement mortar. PVC duct lines entering precast manholes through a PVC endbell shall be solvent welded to the endbell. A cast metal grille-type sump frame and cover shall be installed over the manhole sump. A cable-pulling iron shall be installed in the wall opposite each duct line entrance.

3.6.2 Electric Manholes

Cables shall be securely supported from walls by hot-dip galvanized cable racks with a plastic coating over the galvanizing and equipped with adjustable hooks and insulators. The number of cable racks indicated shall be installed in each manhole and not less than 2 spare hooks shall be installed on each cable rack. Insulators shall be made of high-glazed porcelain. Insulators will not be required on spare hooks.

### 3.6.3 Handholes

Handholes shall be located approximately as shown. Handholes shall be of the type noted on the drawings and shall be constructed in accordance with the details shown.

### 3.6.4 Ground Rods

A ground rod shall be installed at the manholes, handholes and pullboxes. Ground rods shall be driven into the earth before the manhole floor is poured so that approximately 4 inches of the ground rod will extend above the manhole floor. When precast concrete manholes are used, the top of the ground rod may be below the manhole floor and a No. 1/0 AWG ground conductor brought into the manhole through a watertight sleeve in the manhole wall.

## 3.7 PAD-MOUNTED EQUIPMENT INSTALLATION

Pad-mounted equipment, shall be installed on concrete pads in accordance with the manufacturer's published, standard installation drawings and procedures, except that they shall be modified to meet the requirements of this document. Securely anchor all pad-mounted equipment to pad per manufacturer's directions. Units shall be installed so that they do not damage equipment or scratch painted or coated surfaces. After installation, surfaces shall be inspected and scratches touched up with a paint or coating provided by the manufacturer especially for this purpose. Three-phase transformers shall be installed with abc phase sequence. Primary taps shall be set at 0%.

### 3.7.1 Concrete Pads

#### 3.7.1.1 Construction

Concrete pads for pad-mounted electrical equipment may be either pre-fabricated or poured-in-place. Pads shall be constructed as indicated, except that exact pad dimensions and mounting details are equipment specific and are the responsibility of the Contractor. Tops of concrete pads shall be level and shall project 4 inches above finished paving or grade and sloped to drain. Edges of concrete pads shall have 3/4 inch chamfer. Conduits for primary, secondary, and grounding conductors shall be set in place prior to placement of concrete pads. Where grounding electrode conductors are installed through concrete pads, PVC conduit sleeves shall be installed through the concrete to provide physical protection. To facilitate cable installation and termination, the concrete pad shall be provided with a rectangular hole below the primary and secondary compartments, sized in accordance with the manufacturer's recommended dimensions. Upon completion of equipment installation the rectangular hole shall be filled with masonry grout.

#### 3.7.1.2 Concrete and Reinforcement

Concrete work shall have minimum 3000 psi compressive strength and comform to the requirements of Section 03300 CAST-IN-PLACE STRUCTURAL CONCRETE. Concrete pad reinforcement shall be in accordance with Section 03200A CONCRETE REINFORCEMENT.

3.7.1.3 Sealing

When the installation is complete, the Contractor shall seal all conduit and other entries into the equipment enclosure with an approved sealing compound. Seals shall be of sufficient strength and durability to protect all energized live parts of the equipment from rodents, insects, or other foreign matter.

3.7.2 Padlocks

Padlocks shall be provided for pad-mounted equipment and for each fence gate. Padlocks shall be keyed as directed by the Contracting Officer.

3.8 CONNECTIONS TO BUILDINGS

Cables shall be extended into the various buildings as indicated, and shall be connected to the first applicable termination point in each building. Interfacing with building interior conduit systems shall be at conduit stubouts terminating 5 feet outside of a building and 2 feet below finished grade as specified and provided under Section 16415A ELECTRICAL WORK, INTERIOR. After installation of cables, conduits shall be sealed with caulking compound to prevent entrance of moisture or gases into buildings.

3.9 GROUNDING

A ground ring consisting of the indicated configuration of bare copper conductors and driven ground rods shall be installed around pad-mounted equipment as shown. Equipment frames of metal-enclosed equipment, and other noncurrent-carrying metal parts, such as cable shields, cable sheaths and armor, and metallic conduit shall be grounded. At least 2 connections shall be provided from a transformer AND a switchgear ground bus to the ground mat. Metallic frames and covers of handholes and pull boxes shall be grounded by use of a braided, copper ground strap with equivalent ampacity of No. 6 AWG.

3.9.1 Grounding Electrodes

Grounding electrodes shall be installed as shown on the drawings and as follows:

a. Driven rod electrodes - Unless otherwise indicated, ground rods shall be driven into the earth until the tops of the rods are approximately 1 foot below finished grade.

b. Ground ring - A ground ring shall be installed as shown consisting of bare copper conductors installed 18 inches, plus or minus 3 inches, below finished top of soil grade. Ground ring conductors shall be sized as shown.

c. Additional electrodes - When the required ground resistance is not met, additional electrodes shall be provided interconnected with grounding conductors to achieve the specified ground resistance. The additional electrodes will be up to three, feet rods spaced a minimum of 10 feet apart. In high ground resistance, UL listed chemically charged ground rods may be used. If the resultant resistance exceeds 25 ohms measured not less than 48 hours after rainfall, the Contracting Officer shall be notified immediately.

3.9.2 Grounding and Bonding Connections

Connections above grade shall be made by the fusion-welding process or with bolted solderless connectors, in compliance with UL 467, and those below grade shall be made by a fusion-welding process. Where grounding conductors are connected to aluminum-composition conductors, specially treated or lined copper-to-aluminum connectors suitable for this purpose shall be used.

3.9.3 Grounding and Bonding Conductors

Grounding and bonding conductors include conductors used to bond transformer enclosures and equipment frames to the grounding electrode system. Grounding and bonding conductors shall be sized as shown, and located to provide maximum physical protection. Bends greater than 45 degrees in ground conductors are not permitted. Routing of ground conductors through concrete shall be avoided. When concrete penetration is necessary, nonmetallic conduit shall be cast flush with the points of concrete entrance and exit so as to provide an opening for the ground conductor, and the opening shall be sealed with a suitable compound after installation.

3.9.4 Surge Arrester Grounding

Surge arresters and neutrals shall be bonded directly to the transformer enclosure and then to the grounding electrode system with a bare copper conductor, sized as shown. Lead lengths shall be kept as short as practicable with no kinks or sharp bends.

3.9.5 Manhole, Handhole, or Concrete Pullbox Grounding

Ground rods installed in manholes, handholes, or concrete pullboxes shall be connected to cable racks, cable-pulling irons, the cable shielding, metallic sheath, and armor at each cable joint or splice by means of a No. 4 AWG braided tinned copper wire. Connections to metallic cable sheaths shall be by means of tinned terminals soldered to ground wires and to cable sheaths. Care shall be taken in soldering not to damage metallic cable sheaths or shields. Ground rods shall be protected with a double wrapping of pressure-sensitive plastic tape for a distance of 2 inches above and 6 inches below concrete penetrations. Grounding electrode conductors shall be neatly and firmly attached to manhole or handhole walls and the amount of exposed bare wire shall be held to a minimum.

3.10 FIELD TESTING

3.10.1 General

Field testing shall be performed in the presence of the Contracting Officer. The Contractor shall notify the Contracting Officer 2 days prior to conducting tests. The Contractor shall furnish all materials, labor, and equipment necessary to conduct field tests. The Contractor shall perform all tests and inspections recommended by the manufacturer unless specifically waived by the Contracting Officer. The Contractor shall maintain a written record of all tests which includes date, test performed, personnel involved, devices tested, serial number and name of test equipment, and test results. Field test reports shall be signed and dated by the Contractor.

3.10.2 Safety

The Contractor shall provide and use safety devices such as rubber gloves, protective barriers, and danger signs to protect and warn personnel in the test vicinity. The Contractor shall replace any devices or equipment which are damaged due to improper test procedures or handling.

3.10.3 Ground-Resistance Tests

The resistance of each grounding electrode, each grounding electrode system and the ground ring shall be measured using the fall-of-potential method defined in IEEE Std 81. Ground resistance measurements shall be made before the electrical distribution system is energized and shall be made in normally dry conditions not less than 48 hours after the last rainfall. Resistance measurements of separate grounding electrode systems shall be made before the systems are bonded together below grade. The combined resistance of separate systems may be used to meet the required resistance, but the specified number of electrodes must still be provided.

a. Single rod electrode - 25 ohms.

b. Multiple rod electrodes - 25 ohms.

c. Ground ring - 25 ohms.

3.10.4 Medium-Voltage Cable Test

After installation and before the operating test or connection to an existing system, the medium-voltage cable system shall be given a high potential test. Direct-current voltage shall be applied on each phase conductor of the system by connecting conductors as one terminal and connecting grounds or metallic shieldings or sheaths of the cable as the other terminal for each test. Prior to making the test, the cables shall be isolated by opening applicable protective devices and disconnecting equipment. The test shall be conducted with all splices, connectors, and terminations in place. The method, voltage, length of time, and other characteristics of the test for initial installation shall be in accordance with NEMA WC 7 or NEMA WC 8 for the particular type of cable installed, except that 28 kV and 35 kV insulation test voltages shall be in accordance with either AEIC CS5 or AEIC CS6 as applicable, and shall not exceed the recommendations of IEEE Std 404 for cable joints and IEEE Std 48 for cable terminations unless the cable and accessory manufacturers indicate higher voltages are acceptable for testing. Should any cable fail due to a weakness of conductor insulation or due to defects or injuries incidental to the installation or because of improper installation of cable, cable joints, terminations, or other connections, the Contractor shall make necessary repairs or replace cables as directed. Repaired or replaced cables shall be retested.

3.10.5 Low-Voltage Cable Test

Low-voltage cable, complete with splices, shall be tested for insulation resistance after the cables are installed, in their final configuration, ready for connection to the equipment, and prior to energization. The test voltage shall be 500 volts dc, applied for one minute between each conductor and ground and between all possible combinations conductors in the same trench, duct, or cable, with all other conductors in the same trench, duct, or conduit. The minimum value of insulation shall be:

R in megohms = (rated voltage in kV + 1) x 1000/(length of cable in feet)

Each cable failing this test shall be repaired or replaced. The repaired cable shall be retested until failures have been eliminated.

3.10.6 Liquid-Filled Transformer Tests

The following field tests shall be performed on all liquid-filled transformers. Pass-fail criteria shall be in accordance with transformer manufacturer's specifications.

a. Insulation resistance test phase-to-ground.

b. Turns ratio test.

c. Correct phase sequence.

d. Correct operation of tap changer.

3.10.7 Pre-Energization Services

Calibration, testing, adjustment, and placing into service of the installation shall be accomplished by a manufacturer's product field service engineer or independent testing company with a minimum of 2 years of current product experience. The following services shall be performed on the equipment listed below. These services shall be performed subsequent to testing but prior to the initial energization. The equipment shall be inspected to ensure that installation is in compliance with the recommendations of the manufacturer and as shown on the detail drawings. Terminations of conductors at major equipment shall be inspected to ensure the adequacy of connections. Bare and insulated conductors between such terminations shall be inspected to detect possible damage during installation. If factory tests were not performed on completed assemblies, tests shall be performed after the installation of completed assemblies. Components shall be inspected for damage caused during installation or shipment to ensure packaging materials have been removed. Components capable of being both manually and electrically operated shall be operated manually prior to the first electrical operation. Components capable of being calibrated, adjusted, and tested shall be calibrated, adjusted, and tested in accordance with the instructions of the equipment manufacturer. Items for which such services shall be provided, but are not limited to, are the following:

a. Pad-mounted transformers

b. Metal-enclosed switchgear

3.10.8 Operating Tests

After the installation is completed, and at such times as the Contracting Officer may direct, the Contractor shall conduct operating tests for approval. The equipment shall be demonstrated to operate in accordance with the requirements herein. An operating test report shall be submitted in accordance with paragraph SUBMITTALS.

## 3.11 MANUFACTURER'S FIELD SERVICE

### 3.11.1 Onsite Training

The Contractor shall conduct a training course for the operating staff as designated by the Contracting Officer. The training period shall consist of a total of 8 hours of normal working time and shall start after the system is functionally completed but prior to final acceptance tests. The course instruction shall cover pertinent points involved in operating, starting, stopping, and servicing the equipment, as well as all major elements of the operation and maintenance manuals. Additionally, the course instructions shall demonstrate all routine maintenance operations. A VHS format video tape of the entire training session shall be submitted.

### 3.11.2 Installation Engineer

After delivery of the equipment, the Contractor shall furnish one or more field engineers, regularly employed by the equipment manufacturer to supervise the installation of the equipment, assist in the performance of the onsite tests, initial operation, and instruct personnel as to the operational and maintenance features of the equipment.

## 3.12 ACCEPTANCE

Final acceptance of the facility will not be given until the Contractor has successfully completed all tests and after all defects in installation, material or operation have been corrected.

-- End of Section --

SECTION TABLE OF CONTENTS

DIVISION 16 - ELECTRICAL

SECTION 16415A

ELECTRICAL WORK, INTERIOR

**06/02**

PART 1 GENERAL

1.1 REFERENCES
1.2 GENERAL
1.2.1 Rules
1.2.2 Coordination
1.2.3 Special Environments
1.2.3.1 Weatherproof Locations
1.2.3.2 Hazardous Locations
1.2.3.3 Ducts, Plenums and Other Air-Handling Spaces
1.2.4 Standard Products
1.2.5 Nameplates
1.2.5.1 Identification Nameplates
1.2.5.2 Liquid-Filled Transformer Nameplates
1.2.6 As-Built Drawings
1.3 SUBMITTALS
1.4 WORKMANSHIP

PART 2 PRODUCTS

2.1 CABLES AND WIRES
2.1.1 Equipment Manufacturer Requirements
2.1.2 Aluminum Conductors
2.1.3 Insulation
2.1.4 Bonding Conductors
2.1.5 Service Entrance Cables
2.1.6 Cord Sets and Power Supply Cords
2.2 TRANSIENT VOLTAGE SURGE PROTECTION
2.3 CIRCUIT BREAKERS
2.3.1 Molded Case Circuit Breakers
2.3.1.1 Construction
2.3.1.2 Ratings
2.3.1.3 Thermal Magnetic Trip Elements
2.3.2 Solid-State Trip Elements
2.3.3 Current-Limiting Circuit Breakers
2.3.4 SWD Circuit Breakers
2.3.5 HACR Circuit Breakers
2.3.6 Ground Fault Circuit Interrupters
2.4 MOTOR SHORT-CIRCUIT PROTECTOR (MSCP)
2.4.1 Construction
2.4.2 Ratings
2.5 CONDUIT AND TUBING
2.5.1 Electrical, Zinc-Coated Steel Metallic Tubing
2.5.2 Flexible Conduit, Steel and Plastic
2.5.3 Intermediate Metal Conduit
2.5.4 PVC Coated Rigid Steel Conduit

2.6 CONDUIT AND DEVICE BOXES AND FITTINGS
2.6.1 Boxes, Metallic Outlet
2.6.2 Boxes, Outlet for Use in Hazardous (Classified Locations
2.6.3 Boxes, Switch (Enclosed), Surface-Mounted
2.6.4 Fittings for Conduit and Outlet Boxes
2.6.5 Fittings for Use in Hazardous (Classified) Locations
2.7 CONDUIT COATINGS PLASTIC RESIN SYSTEM
2.8 CONNECTORS, WIRE PRESSURE
2.8.1 For Use with Copper Conductors
2.9 ELECTRICAL GROUNDING AND BONDING EQUIPMENT
2.9.1 Ground Rods
2.9.2 Ground Bus
2.10 ENCLOSURES
2.10.1 Cabinets and Boxes
2.11 LIGHTING FIXTURES, LAMPS, BALLASTS, EMERGENCY EQUIPMENT, CONTROLS AND ACCESSORIES
2.11.1 Lamps
2.11.2 Ballasts and Transformers
2.11.3 Fixtures
2.11.4 Lampholders, Starters, and Starter Holders
2.12 LOW-VOLTAGE FUSES AND FUSEHOLDERS
2.12.1 Fuses, Low-Voltage Cartridge Type
2.12.2 Fuses, High-Interrupting Capacity, Current-Limiting Type
2.12.3 Fuses, Class K, High-Interrupting-Capacity Type
2.12.4 Fuses, Class H
2.12.5 Fuses, Class R
2.12.6 Fuses, Class T
2.12.7 Fuses for Supplementary Overcurrent Protection
2.12.8 Fuses, D-C for Industrial Use
2.12.9 Fuseholders
2.13 INSTRUMENTS, ELECTRICAL INDICATING
2.14 MOTORS, AC, FRACTIONAL AND INTEGRAL
2.14.1 Rating
2.14.2 Motor Efficiencies
2.15 MOTOR CONTROLS AND MOTOR CONTROL CENTERS
2.15.1 General
2.15.2 Motor Starters
2.15.2.1 Reduced-Voltage Starters
2.15.3 Thermal-Overload Protection
2.15.4 Low-Voltage Motor Overload Relays
2.15.4.1 General
2.15.4.2 Construction
2.15.4.3 Ratings
2.15.5 Automatic Control Devices
2.15.5.1 Direct Control
2.15.5.2 Pilot-Relay Control
2.15.5.3 Manual/Automatic Selection
2.15.6 Motor Control Centers
2.16 PANELBOARDS
2.17 RECEPTACLES
2.17.1 Heavy Duty Grade
2.17.2 Standard Grade
2.17.3 Ground Fault Interrupters
2.17.4 Hazardous (Classified) Locations
2.17.5 NEMA Standard Receptacle Configurations
2.18 SERVICE ENTRANCE EQUIPMENT
2.19 SPLICE, CONDUCTOR
2.20 POWER SWITCHGEAR ASSEMBLIES INCLUDING SWITCHBOARDS
2.20.1 Circuit Breakers

2.20.2 Auxiliary Equipment
2.20.2.1 Instruments
2.20.2.2 Control Switch
2.21 SNAP SWITCHES
2.22 TAPES
2.22.1 Plastic Tape
2.22.2 Rubber Tape
2.23 TRANSFORMERS
2.23.1 Transformers, Dry-Type
2.23.2 Average Sound Level
2.24 WATTHOUR/DEMAND METERS, CHECK
2.25 INSTRUMENT TRANSFORMERS
2.25.1 General
2.25.2 Current Transformers
2.25.2.1 Current Transformers for kWH and Demand Metering (Low Voltage)
2.25.2.2 Voltage Transformers
2.26 WIRING DEVICES
2.27 COORDINATED POWER SYSTEM PROTECTION
2.27.1 Scope of Analyses
2.27.2 Determination of Facts
2.27.3 Single Line Diagram
2.27.4 Fault Current Analysis
2.27.4.1 Method
2.27.4.2 Data
2.27.4.3 Fault Current Availability
2.27.5 Coordination Study
2.27.6 Study Report
2.28 HEATING CABLE
2.28.1 Hazardous Area Heat Tape
2.28.1.1 Ratings
2.28.1.2 Accessories
2.28.1.3 Junction Boxes

PART 3 EXECUTION

3.1 GROUNDING
3.1.1 Ground Rods
3.1.2 Grounding Conductors
3.2 WIRING METHODS
3.2.1 Conduit and Tubing Systems
3.2.1.1 Pull Wires
3.2.1.2 Conduit Stub-Ups
3.2.1.3 Below Slab-on-Grade or in the Ground
3.2.1.4 Installing in Slabs Including Slabs on Grade
3.2.1.5 Changes in Direction of Runs
3.2.1.6 Supports
3.2.1.7 Exposed Raceways
3.2.1.8 Communications Raceways
3.2.2 Cables and Conductors
3.2.2.1 Sizing
3.2.2.2 Cable Splicing
3.2.2.3 Conductor Identification and Tagging
3.2.3 Heating Cable
3.2.3.1 Examination
3.2.3.2 Installation
3.3 BOXES AND SUPPORTS
3.3.1 Box Applications
3.3.2 Brackets and Fasteners

3.3.3 Mounting in Walls, Ceilings, or Recessed Locations
3.3.4 Installation in Overhead Spaces
3.4 DEVICE PLATES
3.5 RECEPTACLES
3.5.1 Single and Duplex, 15 or 20-ampere, 125 volt
3.5.2 Weatherproof Applications
3.5.2.1 Damp Locations
3.5.2.2 Wet Locations
3.5.3 Special-Purpose or Heavy Duty Receptacles
3.6 WALL SWITCHES
3.7 SERVICE EQUIPMENT
3.8 PANELBOARDS
3.8.1 Panelboards
3.9 FUSES
3.9.1 Cartridge Fuses; Noncurrent-Limiting Type
3.9.2 Cartridge Fuses; Current-Limiting Type
3.9.3 Continuous Current Ratings (600 Amperes and Smaller)
3.9.4 Motor and Transformer Circuit Fuses
3.10 UNDERGROUND SERVICE
3.11 MOTORS
3.12 MOTOR CONTROL
3.12.1 Reduced-Voltage Controllers
3.12.2 Motor Control Centers
3.12.3 Contacts
3.13 MOTOR-DISCONNECT MEANS
3.14 TRANSFORMER INSTALLATION
3.15 LIGHTING FIXTURES, LAMPS AND BALLASTS
3.15.1 Lamps
3.15.2 Lighting Fixtures
3.15.2.1 Accessories
3.15.2.2 Ceiling Fixtures
3.15.2.3 Fixtures for Installation in Grid Type Ceilings
3.15.2.4 Suspended Fixtures
3.15.3 Ballasts
3.15.4 Emergency Light Sets
3.16 EQUIPMENT CONNECTIONS
3.16.1 Motors and Motor Control
3.16.2 Installation of Government-Furnished Equipment
3.17 CIRCUIT PROTECTIVE DEVICES
3.18 PAINTING AND FINISHING
3.19 REPAIR OF EXISTING WORK
3.20 FIELD TESTING
3.20.1 Safety
3.20.2 Ground-Resistance Tests
3.20.3 Ground-Grid Connection Inspection
3.20.4 Cable Tests
3.20.4.1 Low Voltage Cable Tests
3.20.5 Motor Tests
3.20.6 Dry-Type Transformer Tests
3.20.7 Circuit Breaker Tests
3.20.7.1 Circuit Breakers, Low Voltage
3.20.7.2 Circuit Breakers, Molded Case
3.20.8 Motor Control Centers
3.21 OPERATING TESTS
3.22 FIELD SERVICE
3.22.1 Onsite Training
3.22.2 Installation Engineer
3.23 ACCEPTANCE

-- End of Section Table of Contents --

SECTION 16415A

ELECTRICAL WORK, INTERIOR
**06/02**

PART 1 GENERAL

1.1 REFERENCES

The publications listed below form a part of this specification to the extent referenced. The publications are referred to in the text by basic designation only.

AMERICAN NATIONAL STANDARDS INSTITUTE (ANSI)

| | |
|---|---|
| ANSI C12.10 | (1997) Electromechanical Watthour Meters |
| ANSI C12.11 | (1987; R 1993) Instrument Transformers for Revenue Metering, 10 kV BIL through 350 kV BIL (0.6 kV NSV through 69 kV NSV) |
| ANSI C39.1 | (1981; R 1992) Requirements for Electrical Analog Indicating Instruments |
| ANSI C78.1 | (1991; C78.1a; R 1996) Fluorescent Lamps - Rapid-Start Types - Dimensional and Electrical Characteristics |
| ANSI C78.1350 | (1990) Electric Lamps - 400-Watt, 100-Volt, S51 Single-Ended High-Pressure Sodium Lamps |
| ANSI C78.1351 | (1989) Electric Lamps - 250-Watt, 100-Volt S50 Single-Ended High-Pressure Sodium Lamps |
| ANSI C78.1352 | (1990) Electric Lamps - 1000-Watt, 250-Volt, S52 Single-Ended High-Pressure Sodium Lamps |
| ANSI C78.1355 | (1989) Electric Lamps - 150-Watt, 55-Volt S55 High-Pressure Sodium Lamps |
| ANSI C78.1375 | (1996) 400-Watt, M59 Single-Ended Metal-Halide Lamps |
| ANSI C78.1376 | (1996) 1000-Watt, M47 Metal-Halide Lamps |
| ANSI C82.1 | (1997) Specifications for Fluorescent Lamp Ballasts \$18.00$\F\X Addenda D & E |
| ANSI C82.4 | (1992) Ballasts for High-Intensity-Discharge and Low-Pressure Sodium Lamps (Multiple-Supply Type) |

ASTM INTERNATIONAL (ASTM)

| | |
|---|---|
| ASTM B 1 | (1995) Hard-Drawn Copper Wire |
| ASTM B 8 | (1999) Concentric-Lay-Stranded Copper Conductors, Hard, Medium-Hard, or Soft |
| ASTM D 709 | (2000) Laminated Thermosetting Materials |

INSTITUTE OF ELECTRICAL AND ELECTRONICS ENGINEERS (IEEE)

| | |
|---|---|
| IEEE C37.20.1 | (1993) Metal-Enclosed Low-Voltage Power Circuit-Breaker Switchgear |
| IEEE C57.12.00 | (1993) Standard General Requirements for Liquid-Immersed Distribution, Power, and Regulating Transformers |
| IEEE C57.13 | (1993) Instrument Transformers |
| IEEE C62.41 | (1991; R 1995) Surge Voltages in Low-Voltage AC Power Circuits |
| IEEE Std 242 | (1986; R 1991) Recommended Practice for Protection and Coordination of Industrial and Commercial Power Systems |
| IEEE Std 399 | (1997) Recommended Practice for Industrial and Commercial Power Systems Analysis |
| IEEE Std 81 | (1983) Guide for Measuring Earth Resistivity, Ground Impedance, and Earth Surface Potentials of a Ground System (Part 1) \$31.00$\F |

NATIONAL ELECTRICAL MANUFACTURERS ASSOCIATION (NEMA)

| | |
|---|---|
| NEMA 250 | (1997) Enclosures for Electrical Equipment (1000 Volts Maximum) |
| NEMA AB 1 | (1993) Molded Case Circuit Breakers and Molded Case Switches |
| NEMA FU 1 | (1986) Low Voltage Cartridge Fuses |
| NEMA ICS 1 | (1993) Industrial Control and Systems |
| NEMA ICS 2 | (1993) Industrial Controls and Systems Controllers, Contactors, and Overload Relays Rated Not More Than 2,000 Volts AC or 750 Volts DC |
| NEMA ICS 3 | (1993) Industrial Control and Systems Factory Built Assemblies |
| NEMA ICS 6 | (1993) Industrial Control and Systems, Enclosures |
| NEMA LE 4 | (1987) Recessed Luminaires, Ceiling |

| | |
|---|---|
| | Compatibility |
| NEMA MG 1 | (1998) Motors and Generators |
| NEMA MG 10 | (1994) Energy Management Guide for Selection and Use of Polyphase Motors |
| NEMA OS 1 | (1996) Sheet-Steel Outlet Boxes, Device Boxes, Covers, and Box Supports |
| NEMA PB 1 | (1995) Panelboards |
| NEMA PB 2 | (1995) Deadfront Distribution Switchboards |
| NEMA RN 1 | (1998) Polyvinyl-Chloride (PVC) Externally Coated Galvanized Rigid Steel Conduit and Intermediate Metal Conduit |
| NEMA ST 20 | (1992) Dry-Type Transformers for General Applications |
| NEMA WD 1 | (1999) General Requirements for Wiring Devices |
| NEMA WD 6 | (1997) Wiring Devices - Dimensional Requirements |

NATIONAL FIRE PROTECTION ASSOCIATION (NFPA)

| | |
|---|---|
| NFPA 101 | (2000) Life Safety Code |
| NFPA 70 | (2002) National Electrical Code |

U.S. NATIONAL ARCHIVES AND RECORDS ADMINISTRATION (NARA)

| | |
|---|---|
| 47 CFR 18 | Industrial, Scientific, and Medical Equipment |

UNDERWRITERS LABORATORIES (UL)

| | |
|---|---|
| UL 1 | (2000) Flexible Metal Conduit |
| UL 1004 | (1994; Rev thru Nov 1999) Electric Motors |
| UL 1010 | (1995; Rev thru Mar 1999) Receptical-Plug Combinations for Use in Hazardous (Classified) Locations |
| UL 1029 | (1994; Rev thru Dec 1997) High-Intensity-Discharge Lamp Ballasts |
| UL 1242 | (1996; Rev Mar 1998) Intermediate Metal Conduit |
| UL 1449 | (1996; Rev thru Dec 1999) Transient Voltage Surge Suppressors |
| UL 1570 | (1995; Rev thru Nov 1999) Fluorescent Lighting Fixtures |

| | |
|---|---|
| UL 1572 | (1995; Rev thru Nov 1999) High Intensity Discharge Lighting Fixtures |
| UL 1660 | (2000) Liquid-Tight Flexible Nonmetallic Conduit |
| UL 198B | (1995) Class H Fuses |
| UL 198C | (1986; Rev thru Feb 1998) High-Interrupting-Capacity Fuses, Current-Limiting Types |
| UL 198D | (1995) Class K Fuses |
| UL 198E | (1988; Rev Jul 1988) Class R Fuses |
| UL 198G | (1988; Rev May 1988) Fuses for Supplementary Overcurrent Protection |
| UL 198H | (1988; Rev thru Nov 1993) Class T Fuses |
| UL 198L | (1995; Rev May 1995) D-C Fuses for Industrial Use |
| UL 20 | (1995; Rev thru Oct 1998) General-Use Snap Switches |
| UL 360 | (1996; Rev thru Oct 1997) Liquid-Tight Flexible Steel Conduit |
| UL 467 | (1993; Rev thru Apr 1999) Grounding and Bonding Equipment |
| UL 486A | (1997; Rev thru Dec 1998) Wire Connectors and Soldering Lugs for Use with Copper Conductors |
| UL 486C | (1997; Rev thru Aug 1998) Splicing Wire Connectors |
| UL 486E | (1994; Rev thru Feb 1997) Equipment Wiring Terminals for Use with Aluminum and/or Copper Conductors |
| UL 489 | (1996; Rev thru Dec 1998) Molded-Case Circuit Breakers, Molded-Case Switches, and Circuit-Breaker Enclosures |
| UL 498 | (1996; Rev thru Jan 1999) Attachment Plugs and Receptacles |
| UL 50 | (1995; Rev thru Nov 1999) Enclosures for Electrical Equipment |
| UL 506 | (1994; R Oct 1997) Specialty Transformers |
| UL 508 | (1999) Industrial Control Equipment |

| | |
|---|---|
| UL 510 | (1994; Rev thru Apr 1998) Polyvinyl Chloride, Polyethylene, and Rubber Insulating Tape |
| UL 512 | (1993; Rev thru Mar 1999) Fuseholders |
| UL 514A | (1996; Rev Dec 1999) Metallic Outlet Boxes |
| UL 514B | (1997; Rev Oct 1998) Fittings for Cable and Conduit |
| UL 542 | (1999) Lampholders, Starters, and Starter Holders for Fluorescent Lamps |
| UL 67 | (1993; Rev thru Oct 1999) Panelboards |
| UL 674 | (1994; Rev thru Oct 1998) Electric Motors and Generators for Use in Division 1 Hazardous (Classified) Locations |
| UL 698 | (1995; Rev thru Mar 1999) Industrial Control Equipment for Use in Hazardous (Classified) Locations |
| UL 797 | (1993; Rev thru Mar 1997) Electrical Metallic Tubing |
| UL 817 | (1994; Rev thru May 1999) Cord Sets and Power- |
| UL 83 | (1998; Rev thru Sep 1999) Thermoplastic-Insulated Wires and Cables |
| UL 844 | (1995; Rev thru Mar 1999) Electric Lighting Fixtures for Use in Hazardous (Classified) Locations |
| UL 845 | (1995; Rev thru Nov 1999) Motor Control Centers |
| UL 854 | (1996; Rev Oct 1999) Service-Entrance Cables |
| UL 869A | (1998) Reference Standard for Service Equipment |
| UL 877 | (1993; Rev thru Nov 1999) Circuit Breakers and Circuit-Breaker Enclosures for Use in Hazardous (Classified) Locations |
| UL 886 | (1994; Rev thru Apr 1999) Outlet Boxes and Fittings for Use in Hazardous (Classified) Locations |
| UL 891 | (1994; Rev thru Jan 1995) Dead-Front Switchboards |
| UL 924 | (1995; Rev thru Oct 97) Emergency Lighting and Power Equipment |

| | |
|---|---|
| UL 943 | (1993; Rev thru May 1998) Ground-Fault Circuit-Interrupters |
| UL 98 | (1994; Rev thru Jun 1998) Enclosed and Dead-Front Switches |
| UL Elec Const Dir | (1999) Electrical Construction Equipment Directory |

## 1.2 GENERAL

### 1.2.1 Rules

The installation shall conform to the requirements of NFPA 70 and NFPA 101, unless more stringent requirements are indicated or shown.

### 1.2.2 Coordination

The drawings indicate the extent and the general location and arrangement of equipment, conduit, and wiring. The Contractor shall become familiar with all details of the work and verify all dimensions in the field so that the outlets and equipment shall be properly located and readily accessible. Lighting fixtures, outlets, and other equipment and materials shall be carefully coordinated with mechanical or structural features prior to installation and positioned according to architectural reflected ceiling plans; otherwise, lighting fixtures shall be symmetrically located according to the room arrangement when uniform illumination is required, or asymmetrically located to suit conditions fixed by design and shown. Raceways, junction and outlet boxes, and lighting fixtures shall not be supported from sheet metal roof decks. If any conflicts occur necessitating departures from the drawings, details of and reasons for departures shall be submitted and approved prior to implementing any change. The Contractor shall coordinate the electrical requirements of the mechanical work and provide all power related circuits, wiring, hardware and structural support, even if not shown on the drawings.

### 1.2.3 Special Environments

#### 1.2.3.1 Weatherproof Locations

Wiring, Fixtures, and equipment in designated locations shall conform to NFPA 70 requirements for installation in damp or wet locations.

#### 1.2.3.2 Hazardous Locations

Wiring and equipment in locations indicated shall be of the classes, groups, divisions, and suitable for the operating temperature; as indicated.

#### 1.2.3.3 Ducts, Plenums and Other Air-Handling Spaces

Wiring and equipment in ducts, plenums and other air-handling spaces shall be installed using materials and methods in conformance with NFPA 70unless more stringent requirements are indicated in this specification or on the contract drawings.

### 1.2.4 Standard Products

Material and equipment shall be a standard product of a manufacturer

regularly engaged in the manufacture of the product and shall essentially duplicate items that have been in satisfactory use for at least 2 years prior to bid opening.

1.2.5 Nameplates

1.2.5.1 Identification Nameplates

Major items of electrical equipment and major components shall be permanently marked with an identification name to identify the equipment by type or function and specific unit number as indicated. Designation of motors shall coincide with their designation in the motor control center or panel. Unless otherwise specified, identification nameplates shall be made of laminated plastic in accordance with ASTM D 709 with black outer layers and a white core. Edges shall be chamfered. Plates shall be fastened with black-finished round-head drive screws, except motors, or approved nonadhesive metal fasteners. When the nameplate is to be installed on an irregular-shaped object, the Contractor shall devise an approved support suitable for the application and ensure the proper installation of the supports and nameplates. In all instances, the nameplate shall be installed in a conspicuous location. At the option of the Contractor, the equipment manufacturer's standard embossed nameplate material with black paint-filled letters may be furnished in lieu of laminated plastic. The front of each panelboard, motor control center, switchgear, and switchboard shall have a nameplate to indicate the phase letter, corresponding color and arrangement of the phase conductors. The following equipment, as a minimum, shall be provided with identification nameplates:

| Minimum 1/4 inch High Letters | Minimum 1/8 inch High Letters |
|---|---|
| Panelboards | Control Power Transformers |
| Starters | Control Devices |
| Safety Switches | Instrument Transformers |
| Motor Control Centers | |
| Transformers | |
| Equipment Enclosures | |
| Switchgear | |
| Switchboards | |
| Motors | |

Each panel, section, or unit in motor control centers, switchgear or similar assemblies shall be provided with a nameplate in addition to nameplates listed above, which shall be provided for individual compartments in the respective assembly, including nameplates which identify "future," "spare," and "dedicated" or "equipped spaces."

1.2.5.2 Liquid-Filled Transformer Nameplates

Power transformers shall be provided with Nameplate C information in accordance with IEEE C57.12.00. Nameplates shall indicate percent impedance, voltage, kVA, frequency, number of phases, cooling class, insulation class, temperature rise, the number of gallons and composition of liquid-dielectric, and shall be permanently marked with a statement that the transformer dielectric to be supplied is non-polychlorinated biphenyl. The Contractor shall furnish manufacturer's certification for each transformer that the dielectric is non-PCB classified, with less than 2 ppm PCB content in accordance with paragraph LIQUID DIELECTRICS. Certifications shall be related to serial numbers on transformer

nameplates. Transformer dielectric exceeding the 2 ppm PCB content or transformers without certification will be considered as PCB insulated and will not be accepted.

1.2.6 As-Built Drawings

Following the project completion or turnover, within 30 days the Contractor shall furnish 2 sets of as-built drawings to the Contracting Officer.

1.3 SUBMITTALS

Government approval is required for submittals with a "G" designation; submittals not having a "G" designation are for information only. When used, a designation following the "G" designation identifies the office that will review the submittal for the Government. The following shall be submitted in accordance with Section 01330 SUBMITTAL PROCEDURES:

SD-02 Shop Drawings

Interior Electrical Equipment; G-AE.

Detail drawings consisting of equipment drawings, illustrations, schedules, instructions, diagrams, and other information necessary to define the installation. Detail drawings shall show the rating of items and systems and how the components of an item and system are assembled, function together, and how they will be installed on the project. Data and drawings for component parts of an item or system shall be coordinated and submitted as a unit. Data and drawings shall be coordinated and included in a single submission. Multiple submissions for the same equipment or system are not acceptable except where prior approval has been obtained from the Contracting Officer. In such cases, a list of data to be submitted later shall be included with the first submission. Detail drawings shall show physical arrangement, construction details, connections, finishes, materials used in fabrication, provisions for conduit or busway entrance, access requirements for installation and maintenance, physical size, electrical characteristics, foundation and support details, and equipment weight. Drawings shall be drawn to scale and/or dimensioned. Optional items shall be clearly identified as included or excluded. Detail drawings shall as a minimum include:

a. Transformers.

b. Switchgear.

c. Battery system including calculations for the battery and charger.

d. Voltage regulators.

e. Grounding resistors.

f. Motors and rotating machinery.

g. Motor control centers.

h. Single line electrical diagrams including primary, metering, sensing and relaying, control wiring, and control logic.

i. Sway bracing for suspended luminaires.

Structural drawings showing the structural or physical features of major equipment items, components, assemblies, and structures, including foundations or other types of supports for equipment and conductors. These drawings shall include accurately scaled or dimensioned outline and arrangement or layout drawings to show the physical size of equipment and components and the relative arrangement and physical connection of related components. Weights of equipment, components and assemblies shall be provided when required to verify the adequacy of design and proposed construction of foundations or other types of supports. Dynamic forces shall be stated for switching devices when such forces must be considered in the design of support structures. The appropriate detail drawings shall show the provisions for leveling, anchoring, and connecting all items during installation, and shall include any recommendations made by the manufacturer.

Electrical drawings including single-line and three-line diagrams, and schematics or elementary diagrams of each electrical system; internal wiring and field connection diagrams of each electrical device when published by the manufacturer; wiring diagrams of cabinets, panels, units, or separate mountings; interconnection diagrams that show the wiring between separate components of assemblies; field connection diagrams that show the termination of wiring routed between separate items of equipment; internal wiring diagrams of equipment showing wiring as actually provided for this project. Field wiring connections shall be clearly identified.

If departures from the contract drawings are deemed necessary by the Contractor, complete details of such departures, including changes in related portions of the project and the reasons why, shall be submitted with the detail drawings. Approved departures shall be made at no additional cost to the Government.

SD-03 Product Data

Fault Current and Protective Device Coordination Study; G-AE.

The study shall be submitted along with protective device equipment submittals. No time extensions or similar contract modifications will be granted for work arising out of the requirements for this study. Approval of protective devices proposed shall be based on recommendations of this study, The Government shall not be held responsible for any changes to equipment, device ratings, settings, or additional labor for installation of equipment or devices ordered and/or procured prior to approval of the study.

Manufacturer's Catalog; G-AE.

Data composed of catalog cuts, brochures, circulars, specifications, product data, and printed information in sufficient detail and scope to verify compliance with the requirements of the contract documents.

Material, Equipment, and Fixture Lists; G-AE.

A complete itemized listing of equipment and materials proposed for incorporation into the work. Each entry shall include an item number, the quantity of items proposed, and the name of the manufacturer of each item.

Installation Procedures; G-AE.

Installation procedures for rotating equipment, transformers, switchgear, battery systems, voltage regulators, and grounding resistors. Procedures shall include diagrams, instructions, and precautions required to install, adjust, calibrate, and test devices and equipment.

As-Built Drawings; G-AE.

The as-built drawings shall be a record of the construction as installed. The drawings shall include all the information shown on the contract drawings, deviations, modifications, and changes from the contract drawings, however minor. The as-built drawings shall be kept at the job site and updated daily. The as-built drawings shall be a full-sized set of prints marked to reflect all deviations, changes, and modifications. The as-built drawings shall be complete and show the location, size, dimensions, part identification, and other information. Additional sheets may be added. The as-built drawings shall be jointly inspected for accuracy and completeness by the Contractor's quality control representative and by the Contracting Officer prior to the submission of each monthly pay estimate. Upon completion of the work, the Contractor shall submit three full sized sets of the marked prints to the Contracting Officer for approval. If upon review, the as-built drawings are found to contain errors and/or omissions, they will be returned to the Contractor for correction. The Contractor shall correct and return the as-built drawings to the Contracting Officer for approval within ten calendar days from the time the drawings are returned to the Contractor.

Onsite Tests; G, G-AE.

A detailed description of the Contractor's proposed procedures for on-site tests.

SD-06 Test Reports

Factory Test Reports; G-AE.

Six copies of the information described below in 8 1/2 x 11 inch binders having a minimum of 5 rings from which material may readily be removed and replaced, including a separate section for each test. Sections shall be separated by heavy plastic dividers with tabs.

a. A list of equipment used, with calibration certifications.

b. A copy of measurements taken.

c. The dates of testing.

d. The equipment and values to be verified.

e. The conditions specified for the test.

f. The test results, signed and dated.

g. A description of adjustments made.

Field Test Plan; G-AO, G-AE.

A detailed description of the Contractor's proposed procedures for onsite test submitted 20 days prior to testing the installed system. No field test will be performed until the test plan is approved. The test plan shall consist of complete field test procedures including tests to be performed, test equipment required, and tolerance limits.

Field Test Reports; G-AE.

Six copies of the information described below in 8 1/2 x 11 inch binders having a minimum of 5 rings from which material may readily be removed and replaced, including a separate section for each test. Sections shall be separated by heavy plastic dividers with tabs.

a. A list of equipment used, with calibration certifications.

b. A copy of measurements taken.

c. The dates of testing.

d. The equipment and values to be verified.

e. The conditions specified for the test.

f. The test results, signed and dated.

g. A description of adjustments made.

h. Final position of controls and device settings.

SD-07 Certificates

Materials and Equipment; G-AE.

The label or listing of the Underwriters Laboratories, Inc., will be accepted as evidence that the materials or equipment conform to the applicable standards of that agency. In lieu of this label or listing, a statement from a nationally recognized, adequately equipped testing agency indicating that the items have been tested in accordance with required procedures and that the materials and equipment comply with all contract requirements will be accepted. However, materials and equipment installed in hazardous locations must bear the UL label unless the data submitted from other testing agency is specifically approved in writing by the Contracting Officer. Items which are required to be listed and labeled in accordance with Underwriters Laboratories must be affixed with a UL label that states that it is UL listed.

No exceptions or waivers will be granted to this requirement. Materials and equipment will be approved based on the manufacturer's published data.

For other than equipment and materials specified to conform to UL publications, a manufacturer's statement indicating complete compliance with the applicable standard of the American Society for Testing and Materials, National Electrical Manufacturers Association, or other commercial standard, is acceptable.

## 1.4 WORKMANSHIP

Materials and equipment shall be installed in accordance with NFPA 70, recommendations of the manufacturer, and as shown.

# PART 2 PRODUCTS

Products shall conform to the respective publications and other requirements specified below. Materials and equipment not listed below shall be as specified elsewhere in this section. Items of the same classification shall be identical including equipment, assemblies, parts, and components.

## 2.1 CABLES AND WIRES

Conductors No. 8 AWG and larger diameter shall be stranded. Conductors No. 10 AWG and smaller diameter shall be solid, except that conductors for remote control, alarm, and signal circuits, classes 1, 2, and 3, shall be stranded unless specifically indicated otherwise. Conductor sizes and ampacities shown are based on copper, unless indicated otherwise. All conductors shall be copper.

### 2.1.1 Equipment Manufacturer Requirements

When manufacturer's equipment requires copper conductors at the terminations or requires copper conductors to be provided between components of equipment, provide copper conductors or splices, splice boxes, and other work required to meet manufacturer's requirements.

### 2.1.2 Aluminum Conductors

Aluminum conductors shall not be used.

### 2.1.3 Insulation

Unless indicated otherwise, or required by NFPA 70, power and lighting wires shall be 600-volt, Type THWN, THHN, or THW conforming to UL 83, except that grounding wire may be type TW conforming to UL 83; remote-control and signal circuits shall be Type TW, THW or TF, conforming to UL 83 except where noted or specified to be otherwise. Where lighting fixtures require 90-degree Centigrade (C) conductors, provide only conductors with 90-degree C insulation or better.

### 2.1.4 Bonding Conductors

ASTM B 1, solid bare copper wire for sizes No. 8 AWG and smaller diameter; ASTM B 8, Class B, stranded bare copper wire for sizes No. 6 AWG and larger diameter.

2.1.5 Service Entrance Cables

Service entrance (SE) and underground service entrance (USE) cables, UL 854.

2.1.6 Cord Sets and Power Supply Cords

UL 817.

2.2 TRANSIENT VOLTAGE SURGE PROTECTION

Transient voltage surge suppressors shall be provided as indicated. Surge suppressors shall meet the requirements of IEEE C62.41 and be UL listed and labeled as having been tested in accordance with UL 1449. Surge suppressor ratings shall be 480/277 volts rms, operating voltage; 60 Hz; 3-phase; 4 wire with ground; transient suppression voltage (peak let-through voltage) of 1,000 volts. Fuses shall not be used as surge suppression.

2.3 CIRCUIT BREAKERS

2.3.1 Molded Case Circuit Breakers

Molded-case circuit breakers shall conform to NEMA AB 1 and UL 489and UL 877 for circuit breakers and circuit breaker enclosures located in hazardous (classified) locations. Circuit breakers may be installed in panelboards, switchboards, enclosures, motor control centers, or combination motor controllers.

2.3.1.1 Construction

Circuit breakers shall be suitable for mounting and operating in any position. Lug shall be listed for copper conductors only in accordance with UL 486E. Single-pole circuit breakers shall be full module size with not more than one pole per module. Multi-pole circuit breakers shall be of the common-trip type having a single operating handle such that an overload or short circuit on any one pole will result in all poles opening simultaneously. Sizes of 100 amperes or less may consist of single-pole breakers permanently factory assembled into a multi-pole unit having an internal, mechanical, nontamperable common-trip mechanism and external handle ties. All circuit breakers shall have a quick-make, quick-break overcenter toggle-type mechanism, and the handle mechanism shall be trip-free to prevent holding the contacts closed against a short-circuit or sustained overload. All circuit breaker handles shall assume a position between "ON" and "OFF" when tripped automatically. All ratings shall be clearly visible.

2.3.1.2 Ratings

Voltage ratings shall be not less than the applicable circuit voltage. The interrupting rating of the circuit breakers shall be at least equal to the available short-circuit current at the line terminals of the circuit breaker and correspond to the UL listed integrated short-circuit current rating specified for the panelboards and switchboards. Molded-case circuit breakers shall have nominal voltage ratings, maximum continuous-current ratings, and maximum short-circuit interrupting ratings in accordance with NEMA AB 1. Ratings shall be coordinated with system X/R ratio.

2.3.1.3 Thermal Magnetic Trip Elements

Thermal magnetic circuit breakers shall be provided as shown. Automatic

operation shall be obtained by means of thermal-magnetic tripping devices located in each pole providing inverse time delay and instantaneous circuit protection. The instantaneous magnetic trip shall be adjustable and accessible from the front of all circuit breakers on frame sizes above 150 amperes.

2.3.2 Solid-State Trip Elements

Solid-state circuit breakers shall be provided as shown. All electronics shall be self-contained and require no external relaying, power supply, or accessories. Printed circuit cards shall be treated to resist moisture absorption, fungus growth, and signal leakage. All electronics shall be housed in an enclosure which provides protection against arcs, magnetic interference, dust, and other contaminants. Solid-state sensing shall measure true RMS current with error less than one percent on systems with distortions through the 13th harmonic. Peak or average actuating devices are not acceptable. Current sensors shall be torodial construction, encased in a plastic housing filled with epoxy to protect against damage and moisture and shall be integrally mounted on the breaker. Where indicated on the drawings, circuit breaker frames shall be rated for 100 percent continuous duty. Circuit breakers shall have tripping features as shown on the drawings and as described below:

a. Long-time current pick-up, adjustable from 50 percent to 100 percent of continuous current rating.

b. Adjustable long-time delay.

c. Short-time current pick-up, adjustable from 1.5 to 9 times long-time current setting.

d. Adjustable short-time delay.

e. Short-time I square times t switch.

f. Instantaneous current pick-up, adjustable from 1.5 to 9 times long-time current setting.

g. Ground-fault pick-up, adjustable from 20 percent to 60 percent of sensor rating, but not greater than 1200 amperes. Sensing of ground-fault current at the main bonding jumper or ground strap will not be permitted. Zone-selective interlocking shall be provided as shown.

h. Adjustable ground-fault delay.

i. Ground-fault I square times t switch.

j. Overload and short-time and ground-fault trip indicators shall be provided.

2.3.3 Current-Limiting Circuit Breakers

Current-limiting circuit breakers shall be provided as shown. Current-limiting circuit breakers shall limit the let-through I square times t to a value less than the I square times t of one-half cycle of the symmetrical short-circuit current waveform. On fault currents below the threshold of limitation, breakers shall provide conventional overload and short-circuit protection. Integrally-fused circuit breakers shall not be

used.

2.3.4 SWD Circuit Breakers

Circuit breakers rated 15 amperes and intended to switch 277 volts or less fluorescent lighting loads shall be marked "SWD."

2.3.5 HACR Circuit Breakers

Circuit breakers 60 amperes or below, 240 volts, 1-pole or 2-pole, intended to protect multi-motor and combination-load installations involved in heating, air conditioning, and refrigerating equipment shall be marked "Listed HACR Type."

2.3.6 Ground Fault Circuit Interrupters

UL 943. Breakers equipped with ground fault circuit interrupters shall have ground fault class, interrupting capacity, and voltage and current ratings as indicated.

2.4 MOTOR SHORT-CIRCUIT PROTECTOR (MSCP)

Motor short-circuit protectors shall conform to UL 508 and shall be provided as shown. Protectors shall be used only as part of a combination motor controller which provides coordinated motor branch-circuit overload and short-circuit protection, and shall be rated in accordance with the requirements of NFPA 70.

2.4.1 Construction

Motor short-circuit protector bodies shall be constructed of high temperature, dimensionally stable, long life, nonhygroscopic materials. Protectors shall fit special MSCP mounting clips and shall not be interchangeable with any commercially available fuses. Protectors shall have 100 percent one-way interchangeability within the A-Y letter designations. All ratings shall be clearly visible.

2.4.2 Ratings

Voltage ratings shall be not less than the applicable circuit voltage. Letter designations shall be A through Y for motor controller Sizes 0, 1, 2, 3, 4, and 5, with 100,000 amperes interrupting capacity rating. Letter designations shall correspond to controller sizes as follows:

| CONTROLLER SIZE | MSCP DESIGNATION |
|---|---|
| NEMA O | A-N |
| NEMA 1 | A-P |
| NEMA 2 | A-S |
| NEMA 3 | A-U |
| NEMA 4 | A-W |
| NEMA 5 | A-Y |

2.5 CONDUIT AND TUBING

2.5.1 Electrical, Zinc-Coated Steel Metallic Tubing

UL 797

2.5.2 Flexible Conduit, Steel and Plastic

General-purpose type, UL 1; liquid tight, UL 360, and UL 1660.

2.5.3 Intermediate Metal Conduit

UL 1242.

2.5.4 PVC Coated Rigid Steel Conduit

NEMA RN 1.

2.6 CONDUIT AND DEVICE BOXES AND FITTINGS

2.6.1 Boxes, Metallic Outlet
NEMA OS 1 and UL 514A.

2.6.2 Boxes, Outlet for Use in Hazardous (Classified Locations

UL 886.

2.6.3 Boxes, Switch (Enclosed), Surface-Mounted

UL 98.

2.6.4 Fittings for Conduit and Outlet Boxes

UL 514B.

2.6.5 Fittings for Use in Hazardous (Classified) Locations

UL 886.

2.7 CONDUIT COATINGS PLASTIC RESIN SYSTEM

NEMA RN 1, Type A-40.

2.8 CONNECTORS, WIRE PRESSURE

2.8.1 For Use with Copper Conductors

UL 486A.

2.9 ELECTRICAL GROUNDING AND BONDING EQUIPMENT

UL 467.

2.9.1 Ground Rods

Ground rods shall be of copper-clad steel conforming to UL 467 not less than 3/4 inch in diameter by 810 feet in length of the sectional type driven full length into the earth.

2.9.2 Ground Bus

The ground bus shall be bare conductor or flat copper in one piece, if practicable.

2.10 ENCLOSURES

NEMA ICS 6 or NEMA 250 or UL 698 for use in hazardous (classified) locations, unless otherwise specified.

2.10.1 Cabinets and Boxes

Cabinets and boxes with volume greater than 100 cubic inches shall be in accordance with UL 50, hot-dip, zinc-coated, if sheet steel.

2.11 LIGHTING FIXTURES, LAMPS, BALLASTS, EMERGENCY EQUIPMENT, CONTROLS AND ACCESSORIES

The following specifications are supported and supplemented by information and details on the drawings. Additional fixtures, if shown, shall conform to this specification. Lighting equipment installed in classified hazardous locations shall conform to UL 844. Lamps, lampholders, ballasts, transformers, electronic circuitry and other lighting system components shall be constructed according to industry standards. Equipment shall be tested and listed by a recognized independent testing laboratory for the expected installation conditions. Equipment shall conform to the standards listed below.

2.11.1 Lamps

Lamps shall be constructed to operate in the specified fixture, and shall function without derating life or output as listed in published data. Lamps shall meet the requirements of the Energy Policy Act of 1992.

a. Fluorescent lamps shall be green-tipped and shall have color temperature of 3,500. They shall be designed to operate with the ballasts and circuitry of the fixtures in which they will be used. Fluorescent lamps, including spares, shall be manufactured by one manufacturer to provide for color and performance consistency. Fluorescent lamps shall comply with ANSI C78.1. Fluorescent tube lamp efficiencies shall meet or exceed the following requirements.

| | | |
|---|---|---|
| T8, 32 watts | (4' lamp) | 2800 lumens |

(1) Linear fluorescent lamps, unless otherwise indicated, shall be 4 feet long 32 watt T8, 265 mA, with minimum CRI of 75. Lamps of other lengths or types shall be used only where specified or shown. Lamps shall deliver rated life when operated on instant start ballasts .

b. High intensity discharge lamps, including spares, shall be manufactured by one manufacturer in order to provide color and performance consistency. High intensity discharge lamps shall be

designed to operate with the ballasts and circuitry of the fixtures in which they will be used and shall have wattage, shape and base as shown. High intensity discharge lamps, unless otherwise shown, shall have medium or mogul screw base and minimum starting temperature of -20 degrees F. Metal halide lamps, unless otherwise shown, shall have minimum CRI of 65; color temperature of 4,300 degrees Kelvin; shall be -BU configuration if used in base-up position; and shall be -H or high output configuration if used in horizontal position. Lamps shall comply with all applicable ANSI C78.1350, ANSI C78.1351, ANSI C78.1352, ANSI C78.1355,ANSI C78.1375, and ANSI C78.1376.

2.11.2 Ballasts and Transformers

Ballasts or transformers shall be designed to operate the designated lamps within their optimum specifications, without derating the lamps. Lamp and ballast combinations shall be certified as acceptable by the lamp manufacturer.

a. Fluorescent ballasts shall comply with ANSI C82.1 and shall be mounted integrally within fluorescent fixture housing unless otherwise shown. Ballasts shall have maximum current crest factor of 1.7; high power factor; Class A sound rating; maximum operating case temperature of 77 degrees F above ambient; and shall be rated Class P. Unless otherwise indicated, the minimum number of ballasts shall be used to serve each individual fixture. A single ballast may be used to serve multiple fixtures if they are continuously mounted, identically controlled and factory manufactured for that installation with an integral wireway.

(1) Electronic fluorescent ballasts shall comply with 47 CFR 18 for electromagnetic interference. Ballasts shall withstand line transients per IEEE C62.41, Category A. Ballasts shall have total harmonic distortion between 10 and 20%; minimum frequency of 20,000Hz; filament voltage between 2.5 and 4.5 volts; maximum starting inrush current of 20 amperes; and shall comply with the minimum Ballast Efficacy Factors shown in the table below. Minimum starting temperature shall be 50 degrees F. Ballasts shall carry a manufacturer's full warranty of three years, including a minimum $10 labor allowance per ballast.

ELECTRONIC FLUORESCENT BALLAST EFFICACY FACTORS

| LAMP TYPE | TYPE OF STARTER & LAMP | NOMINAL OPERATIONAL VOLTAGE | NUMBER OF LAMPS | MINIMUM BALLAST EFFICACY FACTOR |
|---|---|---|---|---|
| 32W T8 | rapid start linear & U-tubes | 120 or 277 V | 1 | 2.54 |
| | | | 2 | 1.44 |
| | | | 3 | 0.93 |
| | | | 4 | 0.73 |

b. High intensity discharge ballasts shall comply with UL 1029 and, if multiple supply types, with ANSI C82.4. Ballasts shall have

minimum ballast factor of 0.9; high power factor; Class A sound rating; and maximum operating case temperature of 77 degrees F above ambient.

(1) Electronic high intensity discharge ballasts shall be constant wattage autotransformer type; shall have less than 10% ballast loss; shall have total harmonic distortion between 10 and 20%; and shall have a minimum starting temperature of 0 degrees F.

2.11.3 Fixtures

Fixtures shall be in accordance with the size, shape, appearance, finish, and performance shown. Unless otherwise indicated, lighting fixtures shall be provided with housings, junction boxes, wiring, lampholders, mounting supports, trim, hardware and accessories for a complete and operable installation. Recessed housings shall be minimum 20 gauge cold rolled or galvanized steel as shown. Extruded aluminum fixtures shall have minimum wall thickness of 0.125 inches. Plastic lenses shall be 100% virgin acrylic or as shown. Glass lenses shall be tempered. Heat resistant glass shall be borosilicate type. Conoid recessed reflector cones shall be Alzak with clear specular low iridescent finish.

a. Fluorescent fixtures shall comply with UL 1570. Recessed ceiling fixtures shall comply with NEMA LE 4. Fixtures shall be plainly marked for proper lamp and ballast type to identify lamp diameter, wattage, color and start type. Marking shall be readily visible to service personnel, but not visible from normal viewing angles. Fluorescent fixture lens frames on recessed and surface mounted troffers shall be one assembly with mitered corners. Parabolic louvers shall have a low iridescent finish and 45 degree cut-off. Louver intersection joints shall be hairline type and shall conceal mounting tabs or other assembly methods. Louvers shall be free from blemishes, lines or defects which distort the visual surface. Integral ballast and wireway compartments shall be easily accessible without the use of special tools. Housings shall be constructed to include grounding necessary to start the lamps. Open fixtures shall be equipped with a sleeve, wire guard, or other positive means to prevent lamps from falling. Medium bi-pin lampholders shall be twist-in type with positive locking position. Long compact fluorescent fixtures and fixtures utilizing U-bend lamps shall have clamps or secondary lampholders to support the free ends of the lamps.

b. High intensity discharge fixture shall comply with UL 1572. Recessed ceiling fixtures shall comply with NEMA LE 4. Reflectors shall be anodized aluminum. Fixtures for horizontal lamps shall have position oriented lampholders. Lampholders shall be pulse-rated to 5,000 volts. Fixtures indicated as classified or rated for hazardous locations or special service shall be designed and independently tested for the environment in which they are installed. Recessed lens fixtures shall have extruded aluminum lens frames. Ballasts shall be integral to fixtures and shall be accessible without the use of special tools. Remote ballasts shall be encased and potted. Lamps shall be shielded from direct view with a UV absorbing material such as tempered glass, and shall be circuited through a cut-off switch which will shut off

the lamp circuit if the lens is not in place.

c. Emergency lighting fixtures and accessories shall be constructed and independently tested to meet the requirements of applicable codes. Batteries shall be Nicad or equal with no required maintenance, and shall have a minimum life expectancy of five years and warranty period of three years.

e. Exit Signs

Exit signs shall be ENERGY STAR compliant, thereby meeting the following requirements. Input power shall be less than 5 watts per face. Letter size and spacing shall adhere to NFPA 101. Luminance contrast shall be greater than 0.8. Average luminance shall be greater than 15 $cd/m^2$ measured at normal (0 degree) and 45 degree viewing angles. Minimum luminance shall be greater than 8.6 $cd/m^2$ measured at normal and 45 degree viewing angles. Maximum to minimum luminance shall be less than 20:1 measured at normal and 45 degree viewing angles. The manufacturer warranty for defective parts shall be at least 5 years.

2.11.4 Lampholders, Starters, and Starter Holders

UL 542

2.12 LOW-VOLTAGE FUSES AND FUSEHOLDERS

2.12.1 Fuses, Low-Voltage Cartridge Type

NEMA FU 1.

2.12.2 Fuses, High-Interrupting Capacity, Current-Limiting Type

Fuses, Class G, J, L and CC shall be in accordance with UL 198C.

2.12.3 Fuses, Class K, High-Interrupting-Capacity Type

UL 198D.

2.12.4 Fuses, Class H

UL 198B.

2.12.5 Fuses, Class R

UL 198E.

2.12.6 Fuses, Class T

UL 198H.

2.12.7 Fuses for Supplementary Overcurrent Protection

UL 198G.

2.12.8 Fuses, D-C for Industrial Use

UL 198L.

2.12.9 Fuseholders

UL 512.

2.13 INSTRUMENTS, ELECTRICAL INDICATING

ANSI C39.1.

2.14 MOTORS, AC, FRACTIONAL AND INTEGRAL

Motors, ac, fractional and integral horsepower, 500 hp and smaller shall conform to NEMA MG 1 and UL 1004for motors; NEMA MG 10 for energy management selection of polyphase motors; and UL 674 for use of motors in hazardous (classified) locations. In addition to the standards listed above, motors shall be provided with efficiencies as specified in the table "MINIMUM NOMINAL EFFICIENCIES" below.

2.14.1 Rating

The horsepower rating of motors should be limited to no more than 125 percent of the maximum load being served unless a NEMA standard size does not fall within this range. In this case, the next larger NEMA standard motor size should be used.

2.14.2 Motor Efficiencies

All permanently wired polyphase motors of 1 hp or more shall meet the minimum full-load efficiencies as indicated in the following table, and as specified in this specification. Motors of 1 hp or more with open, drip proof or totally enclosed fan cooled enclosures shall be high efficiency type, unless otherwise indicated. Motor efficiencies indicated in the tables apply to general-purpose, single-speed, polyphase induction motors. Applications which require definite purpose, special purpose, special frame, or special mounted polyphase induction motors are excluded from these efficiency requirements. Motors provided as an integral part of motor driven equipment are excluded from this requirement if a minimum seasonal or overall efficiency requirement is indicated for that equipment by the provisions of another section.

MINIMUM NOMINAL MOTOR EFFICIENCIES
OPEN DRIP PROOF MOTORS

| kW | 1200 RPM | 1800 RPM | 3600 RPM |
|---|---|---|---|
| 0.746 | 82.5 | 85.5 | 80.0 |
| 1.12 | 86.5 | 86.5 | 85.5 |
| 1.49 | 87.5 | 86.5 | 86.5 |
| 2.24 | 89.5 | 89.5 | 86.5 |
| 3.73 | 89.5 | 89.5 | 89.5 |
| 5.60 | 91.7 | 91.0 | 89.5 |
| 7.46 | 91.7 | 91.7 | 90.2 |
| 11.2 | 92.4 | 93.0 | 91.0 |
| 14.9 | 92.4 | 93.0 | 92.4 |
| 18.7 | 93.0 | 93.6 | 93.0 |
| 22.4 | 93.6 | 93.6 | 93.0 |
| 29.8 | 94.1 | 94.1 | 93.6 |
| 37.3 | 94.1 | 94.5 | 93.6 |
| 44.8 | 95.0 | 95.0 | 94.1 |
| 56.9 | 95.0 | 95.0 | 94.5 |

MINIMUM NOMINAL MOTOR EFFICIENCIES

| | | | |
|---|---|---|---|
| 74.6 | 95.0 | 95.4 | 94.5 |
| 93.3 | 95.4 | 95.4 | 95.0 |
| 112.0 | 95.8 | 95.8 | 95.4 |
| 149.0 | 95.4 | 95.8 | 95.4 |
| 187.0 | 95.4 | 96.2 | 95.8 |
| 224.0 | 95.4 | 95.0 | 95.4 |
| 261.0 | 94.5 | 95.4 | 95.0 |
| 298.0 | 94.1 | 95.8 | 95.0 |
| 336.0 | 94.5 | 95.4 | 95.4 |
| 373.0 | 94.5 | 94.5 | 94.5 |

TOTALLY ENCLOSED FAN-COOLED MOTORS

| kW | 1200 RPM | 1800 RPM | 3600 RPM |
|---|---|---|---|
| 0.746 | 82.5 | 85.5 | 78.5 |
| 1.12 | 87.5 | 86.5 | 85.5 |
| 1.49 | 88.5 | 86.5 | 86.5 |
| 2.24 | 89.5 | 89.5 | 88.5 |
| 3.73 | 89.5 | 89.5 | 89.5 |
| 5.60 | 91.7 | 91.7 | 91.0 |
| 7.46 | 91.7 | 91.7 | 91.7 |
| 11.2 | 92.4 | 92.4 | 91.7 |
| 14.9 | 92.4 | 93.0 | 92.4 |
| 18.7 | 93.0 | 93.6 | 93.0 |
| 22.4 | 93.6 | 93.6 | 93.0 |
| 29.8 | 94.1 | 94.1 | 93.6 |
| 37.3 | 94.1 | 94.5 | 94.1 |
| 44.8 | 94.5 | 95.0 | 94.1 |
| 56.9 | 95.0 | 95.4 | 94.5 |
| 74.6 | 95.4 | 95.4 | 95.0 |
| 93.3 | 95.4 | 95.4 | 95.4 |
| 112.0 | 95.8 | 95.8 | 95.4 |
| 149.0 | 95.8 | 96.2 | 95.8 |
| 187.0 | 95.6 | 96.2 | 95.9 |
| 224.0 | 95.4 | 96.1 | 95.8 |
| 261.0 | 94.5 | 96.2 | 94.8 |
| 298.0 | 94.5 | 95.8 | 94.5 |
| 336.0 | 94.5 | 94.5 | 94.5 |
| 373.0 | 94.5 | 94.5 | 94.5 |

MINIMUM NOMINAL MOTOR EFFICIENCIES
OPEN DRIP PROOF MOTORS

| HP | 1200 RPM | 1800 RPM | 3600 RPM |
|---|---|---|---|
| 1 | 82.5 | 85.5 | 80.0 |
| 1.5 | 86.5 | 86.5 | 85.5 |
| 2 | 87.5 | 86.5 | 86.5 |
| 3 | 89.5 | 89.5 | 86.5 |
| 5 | 89.5 | 89.5 | 89.5 |
| 7.5 | 91.7 | 91.0 | 89.5 |
| 10 | 91.7 | 91.7 | 90.2 |
| 15 | 92.4 | 93.0 | 91.0 |
| 20 | 92.4 | 93.0 | 92.4 |
| 25 | 93.0 | 93.6 | 93.0 |
| 30 | 93.6 | 93.6 | 93.0 |
| 40 | 94.1 | 94.1 | 93.6 |

TOTALLY ENCLOSED FAN-COOLED MOTORS

| | | | |
|---|---|---|---|
| 50 | 94.1 | 94.5 | 93.6 |
| 60 | 95.0 | 95.0 | 94.1 |
| 75 | 95.0 | 95.0 | 94.5 |
| 100 | 95.0 | 95.4 | 94.5 |
| 125 | 95.4 | 95.4 | 95.0 |
| 150 | 95.8 | 95.8 | 95.4 |
| 200 | 95.4 | 95.8 | 95.4 |
| 250 | 95.4 | 96.2 | 95.8 |
| 300 | 95.4 | 95.0 | 95.4 |
| 350 | 94.5 | 95.4 | 95.0 |
| 400 | 94.1 | 95.8 | 95.0 |
| 450 | 94.5 | 95.4 | 95.4 |
| 500 | 94.5 | 94.5 | 94.5 |

TOTALLY ENCLOSED FAN-COOLED MOTORS

| HP | 1200 RPM | 1800 RPM | 3600 RPM |
|---|---|---|---|
| 1 | 82.5 | 85.5 | 78.5 |
| 1.5 | 87.5 | 86.5 | 85.5 |
| 2 | 88.5 | 86.5 | 86.5 |
| 3 | 89.5 | 89.5 | 88.5 |
| 5 | 89.5 | 89.5 | 89.5 |
| 7.5 | 91.7 | 91.7 | 91.0 |
| 10 | 91.7 | 91.7 | 91.7 |
| 15 | 92.4 | 92.4 | 91.7 |
| 20 | 92.4 | 93.0 | 92.4 |
| 25 | 93.0 | 93.6 | 93.0 |
| 30 | 93.6 | 93.6 | 93.0 |
| 40 | 94.1 | 94.1 | 93.6 |
| 50 | 94.1 | 94.5 | 94.1 |
| 60 | 94.5 | 95.0 | 94.1 |
| 75 | 95.0 | 95.4 | 94.5 |
| 100 | 95.4 | 95.4 | 95.0 |
| 125 | 95.4 | 95.4 | 95.4 |
| 150 | 95.8 | 95.8 | 95.4 |
| 200 | 95.8 | 96.2 | 95.8 |
| 250 | 95.6 | 96.2 | 95.9 |
| 300 | 95.4 | 96.1 | 95.8 |
| 350 | 94.5 | 96.2 | 94.8 |
| 400 | 94.5 | 95.8 | 94.5 |
| 450 | 94.5 | 94.5 | 94.5 |
| 500 | 94.5 | 94.5 | 94.5 |

## 2.15 MOTOR CONTROLS AND MOTOR CONTROL CENTERS

### 2.15.1 General

NEMA ICS 1, NEMA ICS 2, NEMA ICS 3 and NEMA ICS 6, and UL 508 and UL 845. Panelboards supplying non-linear loads shall have neutrals sized for 200 percent of rated current.

### 2.15.2 Motor Starters

Combination starters shall be provided with circuit breakers.

2.15.2.1 Reduced-Voltage Starters

Reduced-voltage starters shall be provided for polyphase motors 50 hp or larger. Reduced-voltage starters shall be of the single-step autotransformer type having an adjustable time interval between application of reduced and full voltages to the motors.

2.15.3 Thermal-Overload Protection

Each motor of 1/8 hp or larger shall be provided with thermal-overload protection. Polyphase motors shall have overload protection in each ungrounded conductor. The overload-protection device shall be provided either integral with the motor or controller, or shall be mounted in a separate enclosure. Unless otherwise specified, the protective device shall be of the manually reset type. Single or double pole tumbler switches specifically designed for alternating-current operation only may be used as manual controllers for single-phase motors having a current rating not in excess of 80 percent of the switch rating.

2.15.4 Low-Voltage Motor Overload Relays

2.15.4.1 General

Thermal overload relays shall conform to NEMA ICS 2 and UL 508. Overload protection shall be provided either integral with the motor or motor controller, and shall be rated in accordance with the requirements of NFPA 70. Standard units shall be used for motor starting times up to 7 seconds. Slow units shall be used for motor starting times from 8 to 12 seconds. Quick trip units shall be used on hermetically sealed, submersible pumps, and similar motors.

2.15.4.2 Construction

Manual reset type thermal relay shall be bimetallic construction. Automatic reset type thermal relays shall be bimetallic construction. Magnetic current relays shall consist of a contact mechanism and a dash pot mounted on a common frame.

2.15.4.3 Ratings

Voltage ratings shall be not less than the applicable circuit voltage. Trip current ratings shall be established by selection of the replaceable overload device and shall not be adjustable. Where the controller is remotely-located or difficult to reach, an automatic reset, non-compensated overload relay shall be provided. Manual reset overload relays shall be provided otherwise, and at all locations where automatic starting is provided. Where the motor is located in a constant ambient temperature, and the thermal device is located in an ambient temperature that regularly varies by more than minus 18 degrees F, an ambient temperature-compensated overload relay shall be provided.

2.15.5 Automatic Control Devices

2.15.5.1 Direct Control

Automatic control devices (such as thermostats, float or pressure switches) which control the starting and stopping of motors directly shall be designed for that purpose and have an adequate horsepower rating.

2.15.5.2 Pilot-Relay Control

Where the automatic-control device does not have such a rating, a magnetic starter shall be used, with the automatic-control device actuating the pilot-control circuit.

2.15.5.3 Manual/Automatic Selection

a. Where combination manual and automatic control is specified and the automatic-control device operates the motor directly, a double-throw, three-position tumbler or rotary switch (marked MANUAL-OFF-AUTOMATIC) shall be provided for the manual control.

b. Where combination manual and automatic control is specified and the automatic-control device actuates the pilot control circuit of a magnetic starter, the magnetic starter shall be provided with a three-position selector switch marked MANUAL-OFF-AUTOMATIC.

c. Connections to the selector switch shall be such that; only the normal automatic regulatory control devices will be bypassed when the switch is in the Manual position; all safety control devices, such as low-or high-pressure cutouts, high-temperature cutouts, and motor-overload protective devices, shall be connected in the motor-control circuit in both the Manual and the Automatic positions of the selector switch. Control circuit connections to any MANUAL-OFF-AUTOMATIC switch or to more than one automatic regulatory control device shall be made in accordance with wiring diagram approved by the Contracting Officer unless such diagram is included on the drawings. All controls shall be 120 volts or less unless otherwise indicated.

2.15.6 Motor Control Centers

Control centers shall conform to the requirements of NEMA ICS 1, NEMA ICS 2, NEMA ICS 3 and NEMA ICS 6, and UL 508 and UL 845. Control centers shall be indoor type and shall contain combination starters and other equipment as indicated. Control centers shall be NEMA ICS 2, Class 1, Type B. Each control center shall be mounted on floor sills or mounting channels. Each circuit shall have a suitable metal or laminated plastic nameplate with white cut letters. Motor control centers shall be provided with a full-length ground bus bar. Arrange breakers such that no disconnect handle is higher than 79 inches above finished floor (77-inches from bottom of enclosure). Provide copper bus and ground bus.

2.16 PANELBOARDS

Dead-front construction, NEMA PB 1 and UL 67 Provide copper bus and ground bus.

2.17 RECEPTACLES

2.17.1 Heavy Duty Grade

NEMA WD 1. Devices shall conform to all requirements for heavy duty receptacles.

2.17.2 Standard Grade

UL 498.

2.17.3 Ground Fault Interrupters

UL 943, Class A or B.

2.17.4 Hazardous (Classified) Locations
UL 1010.

2.17.5 NEMA Standard Receptacle Configurations

NEMA WD 6.

a. Single and Duplex, 15-Ampere and 20-Ampere, 125 Volt

15-ampere, non-locking: NEMA type 5-15R, locking: NEMA type L5-15R,
20-ampere, non-locking: NEMA type 5-20R, locking: NEMA type L5-20R.

2.18 SERVICE ENTRANCE EQUIPMENT

UL 869A.

2.19 SPLICE, CONDUCTOR

UL 486C.

2.20 POWER SWITCHGEAR ASSEMBLIES INCLUDING SWITCHBOARDS

Assemblies shall be metal-enclosed, freestanding general-purpose type in accordance with NEMA PB 2, UL 891, and IEEE C37.20.1 nd shall be installed to provide front and rear access. Busses shall be copper. Assembly shall be approximately 90 inches high; arrangement of circuit breakers and other items specified shall be as indicated. Arrange breakers such that no disconnect handle is higher than 79 inches above finished floor (75-inches from bottom of enclosure). The withstand rating and interrupting capacity of the switchboards and circuit breakers shall be based on the maximum fault current available. Provide copper bus and ground bus.

2.20.1 Circuit Breakers

Circuit breakers shall be drawout insulated-case, systems type circuit breakers.

2.20.2 Auxiliary Equipment

2.20.2.1 Instruments

Instruments shall be long scale, 6.8 inches minimum, semiflush rectangular, indicating or digital switchboard type, mounted at eye level.

a. Ammeter, range 0 to 1600 amperes, complete with selector switch having off position and positions to read each phase current.

b. Voltmeter, range 0 to 600 volts, complete with selector switch having off position and positions to read each phase to phase to neutral voltage.

2.20.2.2 Control Switch

A control switch with indicating lights shall be provided for each electrically operated breaker.

2.21 SNAP SWITCHES

UL 20.

2.22 TAPES

2.22.1 Plastic Tape

UL 510.

2.22.2 Rubber Tape

UL 510.

2.23 TRANSFORMERS

Single- and three-phase transformers shall have two windings per phase. Full-capacity standard NEMA taps shall be provided in the primary windings of transformers unless otherwise indicated. Three-phase transformers shall be configured with delta-wye windings, except as indicated. "T" connections may be used for transformers rated 15 kVA or below. Transformers supplying non-linear loads shall be UL listed as suitable for supplying such loads with a total K-factor not to exceed K-13 and have neutrals sized for 200 percent of rated current.

2.23.1 Transformers, Dry-Type

Transformers shall have 220 degrees C insulation system for transformers 15 kVA and greater, and shall have 180 degrees C insulation system for transformers rated 10 kVA and less, with temperature rise not exceeding 150 degrees C under full-rated load in maximum ambient temperature of 40 degrees C. Transformer of 150 degrees C temperature rise shall be capable of carrying continuously 100 percent of nameplate kVA without exceeding insulation rating.

a. 600 Volt or Less Primary:

NEMA ST 20, UL 506, general purpose, dry-type, self-cooled, ventilated . Transformer T-2 shall be provided in NEMA 1 enclosure. Transformer T-3 shall be provided with a NEMA 3R enclosure. Transformers shall be quiet type with maximum sound level at least 3 decibels less than NEMA standard level for transformer ratings indicated.

2.23.2 Average Sound Level

The average sound level in decibels (dB) of transformers shall not exceed the following dB level at 12 inches for the applicable kVA rating range listed unless otherwise indicated:

| kVA Range | dB Sound Level |
|---|---|
| 1-50 | 50 |
| 51-150 | 55 |

kVA Range dB Sound Level

## 2.24 WATTHOUR/DEMAND METERS, CHECK

ANSI C12.10 for self-contained watthour meter with pulse-initiators for remote monitoring of watt-hour usage . Meter shall be drawout switchboard type.

## 2.25 INSTRUMENT TRANSFORMERS

### 2.25.1 General

Instrument transformers shall comply with ANSI C12.11 and IEEE C57.13. Instrument transformers shall be configured for mounting in/on the device to which they are applied. Polarity marks on instrument transformers shall be visually evident and shown on drawings.

### 2.25.2 Current Transformers

Unless otherwise indicated, bar, wound, or window-type transformers are acceptable; and except for window-type units installed over insulated buses, transformers shall have a BIL rating consistent with the rated BIL of the associated switchgear or electric power apparatus bushings, buses or conductors. Current transformers shall have the indicated ratios. The continuous thermal-current rating factor shall be not less than 2.0. Other thermal and mechanical ratings of current transformer and their primary leads shall be coordinated with the design of the circuit breaker and shall be not less than the momentary rating of the associated circuit breaker. Circuit protectors shall be provided across secondary leads of the current transformers to prevent the accidental open-circuiting of the transformers while energized. Each terminal of each current transformer shall be connected to a short-circuiting terminal block in the circuit interrupting mechanism cabinet, power transformer terminal cabinet, and in the associated instrument and relay cabinets.

#### 2.25.2.1 Current Transformers for kWH and Demand Metering (Low Voltage)

Current transformers shall conform to IEEE C57.13. Provide current transformers with a metering accuracy Class of 0.3 through B-0.5, with a minimum RF of 2 at 30 degrees C, with 600-volt insulation, and 10 kV BIL. Provide butyl-molded, window-type current transformers mounted on the transformer low-voltage bushings. Route current transformer leads in a location as remote as possible from the power transformer secondary cables to permit current measurements to be taken with hook-on-ammeters.

#### 2.25.2.2 Voltage Transformers

Voltage transformers shall have indicated ratios. Units shall have an accuracy class rating of .3. Voltage transformers shall be of the drawout type having current-limiting fuses in both primary and secondary circuits. Mechanical interlocks shall prevent removal of fuses, unless the associated voltage transformer is in a drawout position. Voltage transformer compartments shall have hinged doors.

## 2.26 WIRING DEVICES

NEMA WD 1 for wiring devices, and NEMA WD 6 for dimensional requirements of wiring devices.

## 2.27 COORDINATED POWER SYSTEM PROTECTION

Analyses shall be prepared to demonstrate that the equipment and system constructed meet the specified requirements for equipment ratings, coordination, and protection. They shall include a load flow analysis, a fault current analysis, and protective device coordination study. The studies shall be performed by a registered professional engineer with demonstrated experience in power system coordination in the last three years. The Contractor shall provide a list of references complete with points of contact, addresses and telephone numbers. The selection of the engineer is subject to the approval of the Contracting Officer.

### 2.27.1 Scope of Analyses

The fault current analysis, and protective device coordination study shall begin at: the nearest upstream device in the existing source system and extend through the downstream devices at the load end.

### 2.27.2 Determination of Facts

The time-current characteristics, features, and nameplate data for each existing protective device shall be determined and documented. The Contractor shall coordinate with the base electrical engineer for fault current availability at the site.

### 2.27.3 Single Line Diagram

A single line diagram shall be prepared to show the electrical system buses, devices, transformation points, and all sources of fault current (including generator and motor contributions). A fault-impedance diagram or a computer analysis diagram may be provided. Each bus, device or transformation point shall have a unique identifier. If a fault-impedance diagram is provide, impedance data shall be shown. Locations of switches, breakers, and circuit interrupting devices shall be shown on the diagram together with available fault data, and the device interrupting rating.

### 2.27.4 Fault Current Analysis

#### 2.27.4.1 Method

The fault current analysis shall be performed in accordance with methods described in IEEE Std 242, and IEEE Std 399.

#### 2.27.4.2 Data

Actual data shall be utilized in fault calculations. Bus characteristics and transformer impedances shall be those proposed. Data shall be documented in the report.

#### 2.27.4.3 Fault Current Availability

Balanced three-phase fault, bolted line-to-line fault, and line-to-ground fault current values shall be provided at each voltage transformation point and at each power distribution bus. The maximum and minimum values of fault available at each location shall be shown in tabular form on the diagram or in the report.

2.27.5 Coordination Study

The study shall demonstrate that the maximum possible degree of selectivity has been obtained between devices specified, consistent with protection of equipment and conductors from damage from overloads and fault conditions. The study shall include a description of the coordination of the protective devices in this project. Provide a written narrative that describes: which devices may operate in the event of a fault at each bus; the logic used to arrive at device ratings and settings; situation where system coordination is not achievable due to device limitations (an analysis of any device curves which order overlap); coordination between upstream and downstream devices; and relay settings. Recommendations to improve or enhance system reliability, and detail where such changes would involve additions or modifications to the contract and cost changes (addition or reduction) shall be provided. Composite coordination plots shall be provided on log-log graph paper.

2.27.6 Study Report

a. The report shall include a narrative: the analyses performed; the bases and methods used; and the desired method of coordinated protection of the power system.

b. The study shall include descriptive and technical data for existing devices and new protective devices proposed. The data shall include manufacturers published data, nameplate data, and definition of the fixed or adjustable features of the existing or new protective devices.

c. The report shall document utility company data including system voltages, fault MVA, system X/R ratio, time-current characteristic curves, current transformer ratios, and relay device curves and protective device ratings and settings.

d. The report shall contain fully coordinated composite time-current characteristic curves for each bus in the system, as required to ensure coordinated power system protection between protective devices or equipment. The report shall include recommended ratings and settings of all protective devices in tabulated form.

e. The report shall provide the calculations performed for the analyses, including computer analysis programs utilized. The name of the software package, developer, and version number shall be provided.

2.28 HEATING CABLE

2.28.1 Hazardous Area Heat Tape

Provide heating cable for tempered water lines in the Pump Room. Heating cable shall be thermoplastic-insulated, self regulating, parallel resistance heating cable.

2.28.1.1 Ratings

Ratings for heating cable shall be 120 V, 3 W/lineal ft. Maintain a minimum water temperature of 40 degrees F. Cable and accessories shall be UL listed or FM approved for use in Class I, Division 1, Group D hazardous areas. Cable and accessories shall be weatherproof.

2.28.1.2 Accessories

2.28.1.3 Junction Boxes

Shall be cast iron, watertight and Nema 7 rated. Size boxes to accommodate splicing of circuits. Provide weatherproof sealing compound, Nema 7 conduit fittings and Nema 7 cable fittings at box entrances.

PART 3 EXECUTION

3.1 GROUNDING

Grounding shall be in conformance with NFPA 70, the contract drawings, and the following specifications.

3.1.1 Ground Rods

The resistance to ground shall be measured using the fall-of-potential method described in IEEE Std 81. The maximum resistance of a driven ground shall not exceed 25 ohms under normally dry conditions. If this resistance cannot be obtained with a single rod, 2 additional rods not less than 6 feet on centers, or if sectional type rods are used, 2 additional sections may be coupled and driven with the first rod. In high-ground-resistance, UL listed chemically charged ground rods may be used. If the resultant resistance exceeds 25 ohms measured not less than 48 hours after rainfall, the Contracting Officer shall be notified immediately. Connections below grade shall be fusion welded. Connections above grade shall be fusion welded or shall use UL 467 approved connectors.

3.1.2 Grounding Conductors

A green equipment grounding conductor, sized in accordance with NFPA 70 shall be provided, regardless of the type of conduit. Equipment grounding bars shall be provided in all panelboards. The equipment grounding conductor shall be carried back to the service entrance grounding connection or separately derived grounding connection. All equipment grounding conductors, including metallic raceway systems used as such, shall be bonded or joined together in each wiring box or equipment enclosure. Metallic raceways and grounding conductors shall be checked to assure that they are wired or bonded into a common junction. Metallic boxes and enclosures, if used, shall also be bonded to these grounding conductors by an approved means per NFPA 70. When switches, or other utilization devices are installed, any designated grounding terminal on these devices shall also be bonded to the equipment grounding conductor junction with a short jumper.

3.2 WIRING METHODS

Wiring shall conform to NFPA 70, the contract drawings, and the following specifications. Unless otherwise indicated, wiring shall consist of insulated conductors installed in rigid zinc-coated steel conduitelectrical metallic tubing or intermediate metal conduit . Wire fill in conduits shall be based on NFPA 70 for the type of conduit and wire insulations specified. Wire fill in conduits located in Class I hazardous areas shall be limited to 25 percent of the cross sectional area of the conduit unless U.L. listed, expanded-fill conduit sealing fittings are used.

3.2.1 Conduit and Tubing Systems

Conduit and tubing systems shall be installed as indicated. Conduit sizes shown are based on use of copper conductors with insulation types as described in paragraph WIRING METHODS. Minimum size of raceways shall be 1/2 inch. Only metal conduits will be permitted when conduits are required for shielding or other special purposes indicated, or when required by conformance to NFPA 70. Nonmetallic conduit and tubing may be used in damp, wet or corrosive locations when permitted by NFPA 70 and the conduit or tubing system is provided with appropriate boxes, covers, clamps, screws or other appropriate type of fittings. Electrical metallic tubing (EMT) may be installed only within buildings. EMT may be installed in concrete and grout in dry locations. EMT installed in concrete or grout shall be provided with concrete tight fittings. EMT shall not be installed in damp or wet locations, or the air space of exterior masonry cavity walls. Bushings, manufactured fittings or boxes providing equivalent means of protection shall be installed on the ends of all conduits and shall be of the insulating type, where required by NFPA 70. Only UL listed adapters shall be used to connect EMT to rigid metal conduit, cast boxes, and conduit bodies. Penetrations of above grade floor slabs, time-rated partitions and fire walls shall be firestopped in accordance with Section 07840 FIRESTOPPING. Except as otherwise specified, IMC may be used as an option for rigid steel conduit in areas as permitted by NFPA 70. Raceways shall not be installed under the firepits of boilers and furnaces and shall be kept 6 inches away from parallel runs of flues, steam pipes and hot-water pipes. Raceways shall be concealed within finished walls, ceilings, and floors unless otherwise shown. Raceways crossing structural expansion joints or seismic joints shall be provided with suitable expansion fittings or other suitable means to compensate for the building expansion and contraction and to provide for continuity of grounding. Wiring installed in underfloor raceway system shall be suitable for installation in wet locations. Raceways mounted on or with aboveground fuel piping shall be provided with suitable expansion fittings or other suitable means (explosion-proof, flexible metallic conduit loops) to compensate for piping movement or settlement and for building or fuel storage tank movement or settlement. Provide for continuity of grounding across any such raceway means.

3.2.1.1 Pull Wires

A pull wire shall be inserted in each empty raceway . The pull wire shall be of No. 14 AWG zinc-coated steel, or of plastic having not less than 200 pounds per square inch tensile strength. Not less than 10 inches of slack shall be left at each end of the pull wire.

3.2.1.2 Conduit Stub-Ups

Where conduits are to be stubbed up through concrete floors, a short elbow shall be installed below grade to transition from the horizontal run of conduit to a vertical run. A conduit coupling fitting, threaded on the inside shall be installed, to allow terminating the conduit flush with the finished floor. Wiring shall be extended in rigid threaded conduit to equipment, except that where required, flexible conduit may be used 6 inches above the floor. Empty or spare conduit stub-ups shall be plugged flush with the finished floor with a threaded, recessed plug.

3.2.1.3 Below Slab-on-Grade or in the Ground

Electrical wiring below slab-on-grade shall be protected by a conduit

system. Conduit passing vertically through slabs-on-grade shall be rigid steel or IMC. Rigid steel or IMC conduits installed below slab-on-grade or in the earth shall be field wrapped with 0.010 inch thick pipe-wrapping plastic tape applied with a 50 percent overlay, or shall have a factory-applied polyvinyl chloride, plastic resin, or epoxy coating system.

3.2.1.4 Installing in Slabs Including Slabs on Grade

Conduit installed in slabs-on-grade shall be rigid steel or IMC. Conduits shall be installed as close to the middle of concrete slabs as practicable without disturbing the reinforcement. Outside diameter shall not exceed 1/3 of the slab thickness and conduits shall be spaced not closer than 3 diameters on centers except at cabinet locations where the slab thickness shall be increased as approved by the Contracting Officer. Where conduit is run parallel to reinforcing steel, the conduit shall be spaced a minimum of one conduit diameter away but not less than one inch from the reinforcing steel.

3.2.1.5 Changes in Direction of Runs

Changes in direction of runs shall be made with symmetrical bends or cast-metal fittings. Field-made bends and offsets shall be made with an approved hickey or conduit-bending machine. Crushed or deformed raceways shall not be installed. Trapped raceways in damp and wet locations shall be avoided where possible. Lodgment of plaster, dirt, or trash in raceways, boxes, fittings and equipment shall be prevented during the course of construction. Clogged raceways shall be cleared of obstructions or shall be replaced.

3.2.1.6 Supports

Metallic conduits and tubing,and the support system to which they are attached, shall be securely and rigidly fastened in place to prevent vertical and horizontal movement at intervals of not more than 10 feet and within 3 feet of boxes, cabinets, and fittings, with approved pipe straps, wall brackets, conduit clamps, conduit hangers, threaded C-clamps, beam clamps, or ceiling trapeze. Loads and supports shall be coordinated with supporting structure to prevent damage or deformation to the structure. Loads shall not be applied to joist bridging. Attachment shall be by wood screws or screw-type nails to wood; by toggle bolts on hollow masonry units; by expansion bolts on concrete or brick; by machine screws, welded threaded studs, heat-treated or spring-steel-tension clamps on steel work. Nail-type nylon anchors or threaded studs driven in by a powder charge and provided with lock washers and nuts may be used in lieu of expansion bolts or machine screws. Raceways or pipe straps shall not be welded to steel structures. Cutting the main reinforcing bars in reinforced concrete beams or joists shall be avoided when drilling holes for support anchors. Holes drilled for support anchors, but not used, shall be filled. In partitions of light steel construction, sheet-metal screws may be used. Raceways shall not be supported using wire or nylon ties. Raceways shall be independently supported from the structure. Upper raceways shall not be used as a means of support for lower raceways. Supporting means shall not be shared between electrical raceways and mechanical piping or ducts. Cables and raceways shall not be supported by ceiling grids. Except where permitted by NFPA 70, wiring shall not be supported by ceiling support systems. Conduits shall be fastened to sheet-metal boxes and cabinets with two locknuts where required by NFPA 70, where insulating bushings are used, and where bushings cannot be brought into firm contact with the box; otherwise, a single locknut and bushing may be used. Threadless fittings

for electrical metallic tubing shall be of a type approved for the conditions encountered. Additional support for horizontal runs is not required when EMT rests on steel stud cutouts.

3.2.1.7 Exposed Raceways

Exposed raceways shall be installed parallel or perpendicular to walls, structural members, or intersections of vertical planes and ceilings. Raceways under raised floors and above accessible ceilings shall be considered as exposed installations in accordance with NFPA 70 definitions.
Paint all exposed raceway and associated supports to match exterior conditions, be it building color or fuel piping color.

3.2.1.8 Communications Raceways

Communications raceways indicated shall be installed in accordance with the previous requirements for conduit and tubing and with the additional requirement that no length of run shall exceed 50 feet for 1/2 inch and 3/4 inch sizes, and 100 feet for 1 inch or larger sizes, and shall not contain more than two 90-degree bends or the equivalent. Additional pull or junction boxes shall be installed to comply with these limitations whether or not indicated. Inside radii of bends in conduits of 1 inch size or larger shall not be less than ten times the nominal diameter.

3.2.2 Cables and Conductors

Installation shall conform to the requirements of NFPA 70. Covered, bare or insulated conductors of circuits rated over 600 volts shall not occupy the same equipment wiring enclosure, cable, or raceway with conductors of circuits rated 600 volts or less.

3.2.2.1 Sizing

Unless otherwise noted, all sizes are based on copper conductors and the insulation types indicated. Sizes shall be not less than indicated. Branch-circuit conductors shall be not smaller than No. 12 AWG. Conductors for branch circuits of 120 volts more than 100 feet long and of 277 volts more than 230 feet long, from panel to load center, shall be no smaller than No. 10 AWG. Class 1 remote control and signal circuit conductors shall be not less than No. 14 AWG. Class 2 remote control and signal circuit conductors shall be not less than No. 16 AWG. Class 3 low-energy, remote-control and signal circuits shall be not less than No. 22 AWG.

3.2.2.2 Cable Splicing

Splices shall be made in an accessible location. No underground splices are allowed without prior written consent from the engineer. Crimping tools and dies shall be approved by the connector manufacturer for use with the type of connector and conductor.

a. Copper Conductors, 600 Volt and Under: Splices in conductors No. 10 AWG and smaller diameter shall be made with an insulated, pressure-type connector. Splices in conductors No. 8 AWG and larger diameter shall be made with a solderless connector and insulated with tape or heat-shrink type insulating material equivalent to the conductor insulation.

3.2.2.3 Conductor Identification and Tagging

Power, control, and signal circuit conductor identification shall be provided within each enclosure where a tap, splice, or termination is made. Where several feeders pass through a common pull box, the feeders shall be tagged to indicate clearly the electrical characteristics, circuit number, and panel designation. Phase conductors of low voltage power circuits shall be identified by color coding. Phase identification by a particular color shall be maintained continuously for the length of a circuit, including junctions.

a. Color coding shall be provided for service, feeder, branch, and ground conductors. Color shall be green for grounding conductors and white for neutrals; except where neutrals of more than one system are installed in the same raceway or box, other neutral shall be white with colored (not green) stripe. The color coding for 3-phase and single-phase low voltage systems shall be as follows:

   120/208-volt, 3-phase: Black(A), red(B), and blue(C).
   277/480-volt, 3-phase: Brown(A), orange(B), and yellow(C).
   120/240-volt, 1-phase: Black and red.

b. Conductor phase and voltage identification shall be made by color-coded insulation for all conductors smaller than No. 6 AWG. For conductors No. 6 AWG and larger, identification shall be made by color-coded insulation, or conductors with black insulation may be furnished and identified by the use of half-lapped bands of colored electrical tape wrapped around the insulation for a minimum of 3 inches of length near the end, or other method as submitted by the Contractor and approved by the Contracting Officer.

c. Control and signal circuit conductor identification shall be made by color-coded insulated conductors, plastic-coated self-sticking printed markers, permanently attached stamped metal foil markers, or equivalent means as approved. Control circuit terminals of equipment shall be properly identified. Terminal and conductor identification shall match that shown on approved detail drawings. Hand lettering or marking is not acceptable.

3.2.3 Heating Cable

3.2.3.1 Examination

a. Verity that piping is ready to receive work.
b. Verity field measurements are as shown on shop drawings.
c. Verify that required utilities are available, in proper location, and ready for use.
d. Commencement of installation means installer accepts conditions.

3.2.3.2 Installation

a. Install in accordance with manufacturer's instructions.
b. Bending Radius: Six times cable diameter, minimum.
c. Avoid pinching and making sharp bends in cable.
d. Prevent damage by sharp rocks, metal, or other objects during installation.
e. Do not cross heating cable over itself.

f. Perform field test and inspection to demonstrate installation functions properly.

## 3.3 BOXES AND SUPPORTS

Boxes shall be provided in the wiring or raceway systems where required by NFPA 70 for pulling of wires, making connections, and mounting of devices or fixtures. Pull boxes shall be furnished with screw-fastened covers. Indicated elevations are approximate, except where minimum mounting heights for hazardous areas are required by NFPA 70. Unless otherwise indicated, boxes for wall switches shall be mounted 48 inches above finished floors. Switch and outlet boxes located on opposite sides of fire rated walls shall be separated by a minimum horizontal distance of 24 inches. The total combined area of all box openings in fire rated walls shall not exceed 100 square inches per 100 square feet. Maximum box areas for individual boxes in fire rated walls vary with the manufacturer and shall not exceed the maximum specified for that box in UL Elec Const Dir. Only boxes listed in UL Elec Const Dir shall be used in fire rated walls. Paint all exterior boxes and supports to match exterior conditions.

### 3.3.1 Box Applications

Each box shall have not less than the volume required by NFPA 70 for number of conductors enclosed in box. Boxes for metallic raceways shall be listed for the intended use when located in normally wet locations, when flush or surface mounted on outside of exterior surfaces, or when located in hazardous areas. Boxes installed in wet locations and boxes installed flush with the outside of exterior surfaces shall be gasketed. Boxes for mounting lighting fixtures shall be not less than 4 inches square, or octagonal, except smaller boxes may be installed as required by fixture configuration, as approved. Cast-metal boxes with 3/32 inch wall thickness are acceptable. Unless indicated otherwise,boxes shall be NEMA 1when indoors and shall be NEMA 4X outdoors. Boxes in exterior hazardous locations shall be rated NEMA 7 and NEMA 3R. Boxes in other locations shall be sheet steel, and nonmetallic boxes may be used with nonmetallic conduit and tubing or nonmetallic sheathed cable system, when permitted by NFPA 70. Boxes for use in masonry-block or tile walls shall be square-cornered, tile-type, or standard boxes having square-cornered, tile-type covers.

### 3.3.2 Brackets and Fasteners

Boxes and supports shall be fastened to wood with wood screws or screw-type nails of equal holding strength, with bolts and metal expansion shields on concrete or brick, with toggle bolts on hollow masonry units, and with machine screw or welded studs on steel work. Threaded studs driven in by powder charge and provided with lockwashers and nuts, or nail-type nylon anchors may be used in lieu of expansion shields, or machine screws. Penetration of more than 1-1/2 inches into reinforced-concrete beams or more than 3/4 inch into reinforced-concrete joists shall avoid cutting any main reinforcing steel. The use of brackets which depend on gypsum wallboard or plasterboard for primary support will not be permitted. In partitions of light steel construction, bar hangers with 1 inch long studs, mounted between metal wall studs or metal box mounting brackets shall be used to secure boxes to the building structure. When metal box mounting brackets are used, additional box support shall be provided on the side of the box opposite the brackets. This additional box support shall consist of a minimum 12 inch long section of wall stud, bracketed to the opposite side of the box and secured by two screws through the wallboard on each

side of the stud. Metal screws may be used in lieu of the metal box mounting brackets.

3.3.3 Mounting in Walls, Ceilings, or Recessed Locations

In walls or ceilings of concrete, tile, or other non-combustible material, boxes shall be installed so that the edge of the box is not recessed more than 1/4 inch from the finished surface. Boxes mounted in combustible walls or ceiling material shall be mounted flush with the finished surface. The use of gypsum or plasterboard as a means of supporting boxes will not be permitted. Boxes installed for concealed wiring shall be provided with suitable extension rings or plaster covers, as required. The bottom of boxes installed in masonry-block walls for concealed wiring shall be mounted flush with the top of a block to minimize cutting of the blocks, and boxes shall be located horizontally to avoid cutting webs of block. Separate boxes shall be provided for flush or recessed fixtures when required by the fixture terminal operating temperature, and fixtures shall be readily removable for access to the boxes unless ceiling access panels are provided.

3.3.4 Installation in Overhead Spaces

In open overhead spaces, cast-metal boxes threaded to raceways need not be separately supported except where used for fixture support; cast-metal boxes having threadless connectors and sheet metal boxes shall be supported directly from the building structure or by bar hangers. Hangers shall not be fastened to or supported from joist bridging. Where bar hangers are used, the bar shall be attached to raceways on opposite sides of the box and the raceway shall be supported with an approved type fastener not more than 24 inches from the box.

3.4 DEVICE PLATES

One-piece type device plates shall be provided for all outlets and fittings. Plates on unfinished walls and on fittings shall be of zinc-coated sheet steel, cast-metal, or impact resistant plastic having rounded or beveled edges. Plates on finished walls shall be of steel with baked enamel finish or impact-resistant plastic and shall be ivory. Screws shall be of metal with countersunk heads, in a color to match the finish of the plate. Plates shall be installed with all four edges in continuous contact with finished wall surfaces without the use of mats or similar devices. Plaster fillings will not be permitted. Plates shall be installed with an alignment tolerance of 1/16 inch. The use of sectional-type device plates will not be permitted. Plates installed in wet locations shall be gasketed and provided with a hinged, gasketed cover, unless otherwise specified.

3.5 RECEPTACLES

3.5.1 Single and Duplex, 15 or 20-ampere, 125 volt

Single and duplex receptacles shall be rated 15 amperes, 125 volts, two-pole, three-wire, grounding type with polarized parallel slots or as indicated. Bodies shall be of ivory to match color of switch handles in the same room or to harmonize with the color of the respective wall, and supported by mounting strap having plaster ears. Contact arrangement shall be such that contact is made on two sides of an inserted blade. Receptacle shall be side- or back-wired with two screws per terminal. The third grounding pole shall be connected to the metal mounting yoke. Switched

receptacles shall be the same as other receptacles specified except that the ungrounded pole of each suitable receptacle shall be provided with a separate terminal. Only the top receptacle of a duplex receptacle shall be wired for switching application. Receptacles with ground fault circuit interrupters shall have the current rating as indicated, and shall be UL Class A type unless otherwise shown. Ground fault circuit protection shall be provided as required by NFPA 70 and as indicated on the drawings.

3.5.2 Weatherproof Applications

Weatherproof receptacles shall be suitable for the environment, damp or wet as applicable, and the housings shall be labeled to identify the allowable use. Receptacles shall be marked in accordance with UL 514A for the type of use indicated; "Damp locations", "Wet Locations", "Wet Location Only When Cover Closed". Assemblies shall be installed in accordance with the manufacturer's recommendations.

3.5.2.1 Damp Locations

Receptacles in damp locations shall be mounted in an outlet box with a gasketed, weatherproof, cast-metal cover plate (device plate, box cover) and a gasketed cap (hood, receptacle cover) over each receptacle opening. The cap shall be either a screw-on type permanently attached to the cover plate by a short length of bead chain or shall be a flap type attached to the cover with a spring loaded hinge.

3.5.2.2 Wet Locations

Receptacles in wet locations shall be installed in an assembly rated for such use whether the plug is inserted or withdrawn, unless otherwise indicated. In a duplex installation, the receptacle cover shall be configured to shield the connections whether one or both receptacles are in use.

3.5.3 Special-Purpose or Heavy Duty Receptacles

Special-purpose or heavy-duty receptacles shall be of the type and of ratings and number of poles indicated or required for the anticipated purpose. Contact surfaces may be either round or rectangular. One appropriate straight or angle-type plug shall be furnished with each receptacle. Locking type receptacles, rated 30 amperes or less, shall be locked by rotating the plug. Locking type receptacles, rated more than 50 amperes, shall utilize a locking ring.

3.6 WALL SWITCHES

Wall switches shall be of the totally enclosed tumbler type. The wall switch handle and switch plate color shall be ivory. Wiring terminals shall be of the screw type or of the solderless pressure type having suitable conductor-release arrangement. Not more than one switch shall be installed in a single-gang position. Switches shall be rated 15-ampere 120 -volt for use on alternating current only. Pilot lights indicated shall consist of yoke-mounted candelabra-base sockets rated at 75 watts, 125 volts, and fitted with glass or plastic jewels. A clear 6-watt lamp shall be furnished and installed in each pilot switch. Jewels for use with switches controlling motors shall be green, and jewels for other purposes shall be red. Dimming switches shall be solid-state flush mounted, sized for the loads.

## 3.7 SERVICE EQUIPMENT

Service-disconnecting means shall be of the type indicated POWER SWITCHGEAR ASSEMBLIES INCLUDING SWITCHBOARDS with an external handle for manual operation. When service disconnecting means is a part of an assembly, the assembly shall be listed as suitable for service entrance equipment. Enclosures shall be sheet metal with hinged cover for surface mounting unless otherwise indicated. Securely anchor switchboard to pad per manufacturers directions.

## 3.8 PANELBOARDS

Circuit breakers and switches used as a motor disconnecting means shall be capable of being locked in the open position. Door locks shall be keyed alike. Nameplates shall be as approved. Directories shall be typed to indicate loads served by each circuit and mounted in a holder behind a clear protective covering. Busses shall be copper.

### 3.8.1 Panelboards

Panelboards shall be circuit breaker or fusible switch equipped as indicated on the drawings.

## 3.9 FUSES

Equipment provided under this contract shall be provided with a complete set of properly rated fuses when the equipment manufacturer utilize fuses in the manufacture of the equipment, or if current-limiting fuses are required to be installed to limit the ampere-interrupting capacity of circuit breakers or equipment to less than the maximum available fault current at the location of the equipment to be installed. Fuses shall have a voltage rating of not less than the phase-to-phase circuit voltage, and shall have the time-current characteristics required for effective power system coordination. Time-delay and non-time-delay options shall be as specified.

### 3.9.1 Cartridge Fuses; Noncurrent-Limiting Type

Cartridge fuses of the noncurrent-limiting type shall be Class H, nonrenewable, dual element, time lag type and shall have interrupting capacity of 10,000 amperes. At 500 percent current, cartridge fuses shall not blow in less than 10 seconds.

### 3.9.2 Cartridge Fuses; Current-Limiting Type

Cartridge fuses, current-limiting type, Class RK1 shall have tested interrupting capacity not less than 100,000 amperes. Fuse holders shall be the type that will reject all Class H fuses.

### 3.9.3 Continuous Current Ratings (600 Amperes and Smaller)

Service entrance and feeder circuit fuses (600 amperes and smaller) shall be Class RK1, current-limiting, time-delay with 200,000 amperes interrupting capacity.

### 3.9.4 Motor and Transformer Circuit Fuses

Motor, motor controller, transformer, and inductive circuit fuses shall be Class RK1 or RK5, current-limiting, time-delay with 200,000 amperes

interrupting capacity.

## 3.10 UNDERGROUND SERVICE

Unless otherwise indicated, interior conduit systems shall be stubbed out 5 feet beyond the building wall and 2 feet below finished grade, for interface with the exterior service lateral conduits and exterior communications conduits. Outside conduit ends shall be bushed when used for direct burial service lateral conductors. Outside conduit ends shall be capped or plugged until connected to exterior conduit systems. Underground service lateral conductors will be extended to building service entrance and terminated in accordance with the requirements of Section 16375A ELECTRICAL DISTRIBUTION SYSTEM, UNDERGROUND and NFPA 70.

## 3.11 MOTORS

Each motor shall conform to the hp and voltage ratings indicated, and shall have a service factor and other characteristics that are essential to the proper application and performance of the motors under conditions shown or specified. Three-phase motors for use on 3-phase 208-volt systems shall have a nameplate rating of 200 volts. Unless otherwise specified, all motors shall have open frames, and continuous-duty classification based on a 50 degree C ambient temperature reference. Polyphase motors shall be squirrel-cage type, having normal-starting-torque and low-starting-current characteristics, unless other characteristics are specified in other sections of these specifications or shown on contract drawings. The Contractor shall be responsible for selecting the actual horsepower ratings and other motor requirements necessary for the applications indicated. When electrically driven equipment furnished under other sections of these specifications materially differs from the design, the Contractor shall make the necessary adjustments to the wiring, disconnect devices and branch-circuit protection to accommodate the equipment actually installed.

## 3.12 MOTOR CONTROL

Each motor or group of motors requiring a single control and not controlled from a motor-control center shall be provided under other sections of these specifications with a suitable controller and devices that will perform the functions as specified for the respective motors. Each motor of 1/8 hp or larger shall be provided with thermal-overload protection. Polyphase motors shall have overload protection in each ungrounded conductor. The overload-protection device shall be provided either integral with the motor or controller, or shall be mounted in a separate enclosure. Unless otherwise specified, the protective device shall be of the manually reset type. Single or double pole tumbler switches specifically designed for alternating-current operation only may be used as manual controllers for single-phase motors having a current rating not in excess of 80 percent of the switch rating. Automatic control devices such as thermostats, float or pressure switches may control the starting and stopping of motors directly, provided the devices used are designed for that purpose and have an adequate horsepower rating. When the automatic-control device does not have such a rating, a magnetic starter shall be used, with the automatic-control device actuating the pilot-control circuit. When combination manual and automatic control is specified and the automatic-control device operates the motor directly, a double-throw, three-position tumbler or rotary switch shall be provided for the manual control; when the automatic-control device actuates the pilot control circuit of a magnetic starter, the latter shall be provided with a three-position selector switch marked MANUAL-OFF-AUTOMATIC. Connections to

the selector switch shall be such that only the normal automatic regulatory control devices will be bypassed when the switch is in the Manual position; all safety control devices, such as low- or high-pressure cutouts, high-temperature cutouts, and motor-overload protective devices, shall be connected in the motor-control circuit in both the Manual and the Automatic positions of the selector switch. Control circuit connections to any MANUAL-OFF-AUTOMATIC switch or to more than one automatic regulatory control device shall be made in accordance with wiring diagram approved by the Contracting Officer unless such diagram is included on the drawings. All controls shall be 120 volts or less unless otherwise indicated.

3.12.1 Reduced-Voltage Controllers

Reduced-voltage controllers shall be provided for polyphase motors 50 hp or larger. Reduced-voltage starters shall be of the single-step autotransformer type having an adjustable time interval between application of reduced and full voltages to the motors.

3.12.2 Motor Control Centers

Control centers shall be indoor type and shall contain combination starters and other equipment as indicated. Control centers shall be NEMA ICS 2, Class I, Type B. Each control center shall be mounted on floor sills or mounting channels. Each circuit shall have a suitable metal or laminated plastic nameplate with white cut letters. Combination starters shall be provided with circuit breakers. Motor control centers shall be provided with a full-length ground bus bar. Securely anchor motor control center to pad per manufacturer's directions

3.12.3 Contacts

Unless otherwise indicated, contacts in miscellaneous control devices such as float switches, pressure switches, and auxiliary relays shall have current and voltage ratings in accordance with NEMA ICS 2 for rating designation B300.

3.13 MOTOR-DISCONNECT MEANS

Each motor shall be provided with a disconnecting means when required by NFPA 70 even though not indicated. For single-phase motors, a single or double pole toggle switch, rated only for alternating current, will be acceptable for capacities less than 30 amperes, provided the ampere rating of the switch is at least 125 percent of the motor rating. Switches shall disconnect all ungrounded conductors.

3.14 TRANSFORMER INSTALLATION

Three-phase transformers shall be connected only in a delta-wye or wye-delta configuration as indicated except isolation transformers having a one-to-one turns ratio. "T" connections may be used for transformers rated at 15 kVA or below. Dry-type transformers shown located within 5 feet of the exterior wall shall be provided in a weatherproof enclosure. Transformers to be located within the building may be provided in the manufacturer's standard, ventilated indoor enclosure designed for use in 40 degrees C ambient temperature, unless otherwise indicated.

3.15 LIGHTING FIXTURES, LAMPS AND BALLASTS

This paragraph shall cover the installation of lamps, lighting fixtures and

ballasts in interior or building mounted applications.

3.15.1 Lamps

Lamps of the type, wattage, and voltage rating indicated shall be delivered to the project in the original cartons and installed just prior to project completion. Lamps installed and used for working light during construction shall be replaced prior to turnover to the Government if more than 15% of their rated life has been used. Lamps shall be tested for proper operation prior to turn-over and shall be replaced if necessary with new lamps from the original manufacturer. 10% spare lamps of each type, from the original manufacturer, shall be provided.

3.15.2 Lighting Fixtures

Fixtures shall be as shown and shall conform to the following specifications and shall be as detailed on the drawings. Illustrations shown on the drawings are indicative of the general type desired and are not intended to restrict selection to fixtures of any particular manufacturer. Fixtures of similar designs and equivalent energy efficiency, light distribution and brightness characteristics, and of equal finish and quality will be acceptable if approved. In suspended acoustical ceilings with fluorescent fixtures, the fluorescent emergency light fixtures shall be furnished with self-contained battery packs.

3.15.2.1 Accessories

Accessories such as straps, mounting plates, nipples, or brackets shall be provided for proper installation.

3.15.2.2 Ceiling Fixtures

Ceiling fixtures shall be coordinated with and suitable for installation in, on or from the ceiling as shown. Installation and support of fixtures shall be in accordance with NFPA 70 and manufacturer's recommendations. Where seismic requirements are specified herein, fixtures shall be supported as shown or specified. Recessed fixtures shall have adjustable fittings to permit alignment with ceiling panels. Recessed fixtures installed in fire-resistive ceiling construction shall have the same fire rating as the ceiling or shall be provided with fireproofing boxes having materials of the same fire rating as the ceiling, in conformance withUL Elec Const Dir. Surface-mounted fixtures shall be suitable for fastening to the ceiling panel structural supports.

3.15.2.3 Fixtures for Installation in Grid Type Ceilings

Fixtures for installation in grid type ceilings which are smaller than a full tile shall be centered in the tile. 2 by 4 foot fixtures shall be mounted along the grid rail as shown. Work above the ceiling shall be coordinated among the trades to provide the lighting layout shown. Fixtures mounted to the grid shall have trim exactly compatible with the grid. Contractor shall coordinate trims with ceiling trades prior to ordering fixtures. Metric fixtures shall be designed to fit the metric grid specified. Fixtures in continuous rows shall be coordinated between trades prior to ordering. Fixtures shall be mounted using independent supports capable of supporting the entire weight of the fixture. No fixture shall rest solely on the ceiling grid. Recessed fixtures installed in seismic areas should be installed utilizing specially designed seismic clips. Junction boxes shall be supported at four points.

3.15.2.4 Suspended Fixtures

Suspended fixtures shall be provided with swivel hangers or hand-straights so that they hang plumb. Pendants, rods, or chains 4 feet or longer excluding fixture shall be braced to prevent swaying using three cables at 120 degrees of separation. Suspended fixtures in continuous rows shall have internal wireway systems for end to end wiring and shall be properly aligned to provide a straight and continuous row without bends, gaps, light leaks or filler pieces. Aligning splines shall be used on extruded aluminum fixtures to assure hairline joints. Steel fixtures shall be supported to prevent "oil-canning" effects. Fixture finishes shall be free of scratches, nicks, dents, and warps, and shall match the color and gloss specified. Pendants shall be finished to match fixtures. Aircraft cable shall be stainless steel. Canopies shall be finished to match the ceiling and shall be low profile unless otherwise shown. Maximum distance between suspension points shall be 10 feet or as recommended by the manufacturer, whichever is less.

Suspended fixtures installed in seismic areas shall have 45% swivel hangers and shall be located with no obstructions within the 45% range in all directions. The stem, canopy and fixture shall be capable of 45% swing.

3.15.3 Ballasts

Remote type ballasts or transformers, where indicated, shall be mounted in a well ventilated, easily accessible location, within the maximum operating distance from the lamp as designated by the manufacturer.

3.15.4 Emergency Light Sets

Emergency light sets shall conform to UL 924 with the number of heads as indicated. Sets shall be permanently connected to the wiring system by conductors installed in short lengths of flexible conduit.

3.16 EQUIPMENT CONNECTIONS

Wiring not furnished and installed under other sections of the specifications for the connection of electrical equipment as indicated on the drawings shall be furnished and installed under this section of the specifications. Connections shall comply with the applicable requirements of paragraph WIRING METHODS. Flexible conduits 6 feet or less in length shall be provided to all electrical equipment subject to periodic removal, vibration, or movement and for all motors. All motors shall be provided with separate grounding conductors. Liquid-tight conduits shall be used in damp or wet locations.

3.16.1 Motors and Motor Control

Motors, motor controls, and motor control centers shall be installed in accordance with NFPA 70, the manufacturer's recommendations, and as indicated. Wiring shall be extended to motors, motor controls, and motor control centers and terminated.

3.16.2 Installation of Government-Furnished Equipment

Wiring shall be extended to the equipment and terminated.

## 3.17 CIRCUIT PROTECTIVE DEVICES

The Contractor shall calibrate, adjust, set and test each new adjustable circuit protective device to ensure that they will function properly prior to the initial energization of the new power system under actual operating conditions.

## 3.18 PAINTING AND FINISHING

Field-applied paint on exposed surfaces shall be provided under Section 09900 PAINTS AND COATINGS.

## 3.19 REPAIR OF EXISTING WORK

The work shall be carefully laid out in advance, and where cutting, channeling, chasing, or drilling of floors, walls, partitions, ceiling, or other surfaces is necessary for the proper installation, support, or anchorage of the conduit, raceways, or other electrical work, this work shall be carefully done, and any damage to building, piping, or equipment shall be repaired by skilled mechanics of the trades involved at no additional cost to the Government.

## 3.20 FIELD TESTING

Field testing shall be performed in the presence of the Contracting Officer. The Contractor shall notify the Contracting Officer 10 days prior to conducting tests. The Contractor shall furnish all materials, labor, and equipment necessary to conduct field tests. The Contractor shall perform all tests and inspection recommended by the manufacturer unless specifically waived by the Contracting Officer. The Contractor shall maintain a written record of all tests which includes date, test performed, personnel involved, devices tested, serial number and name of test equipment, and test results. All field test reports will be signed and dated by the Contractor.

### 3.20.1 Safety

The Contractor shall provide and use safety devices such as rubber gloves, protective barriers, and danger signs to protect and warn personnel in the test vicinity. The Contractor shall replace any devices or equipment which are damaged due to improper test procedures or handling.

### 3.20.2 Ground-Resistance Tests

The resistance of each grounding electrode shall be measured using the fall-of-potential method defined in IEEE Std 81. Soil resistivity in the area of the grid shall be measured concurrently with the grid measurements. Ground resistance measurements shall be made before the electrical distribution system is energized and shall be made in normally dry conditions not less than 48 hours after the last rainfall. Resistance measurements of separate grounding electrode systems shall be made before the systems are bonded together below grade. The combined resistance of separate systems may be used to meet the required resistance, but the specified number of electrodes must still be provided.

a. Single rod electrode - 25 ohms.

b. Grid electrode - 25 ohms.

3.20.3 Ground-Grid Connection Inspection

All below-grade ground-grid connections will be visually inspected by the Contracting Officer before backfilling. The Contractor shall notify the Contracting Officer 24 hours before the site is ready for inspection.

3.20.4 Cable Tests

The Contractor shall be responsible for identifying all equipment and devices that could be damaged by application of the test voltage and ensuring that they have been properly disconnected prior to performing insulation resistance testing. An insulation resistance test shall be performed on all low and medium voltage cables after the cables are installed in their final configuration and prior to energization. The test voltage shall be 500 volts DC applied for one minute between each conductor and ground and between all possible combinations of conductors. The minimum value of resistance shall be:

R in megohms = (rated voltage in kV + 1) x 1000/(length of cable in feet)

Each cable failing this test shall be repaired or replaced. The repaired cable system shall then be retested until failures have been eliminated.

3.20.4.1 Low Voltage Cable Tests

a. Continuity test.

b. Insulation resistance test.

3.20.5 Motor Tests

a. Phase rotation test to ensure proper directions.

b. Operation and sequence of reduced voltage starters.

c. High potential test on each winding to ground.

d. Insulation resistance of each winding to ground.

e. Vibration test.

f. Dielectric absorption test on motor.

3.20.6 Dry-Type Transformer Tests

The following field tests shall be performed on all dry-type transformers 15 kVA and above.

a. Insulation resistance test phase-to-ground, each phase.

b. Turns ratio test.

3.20.7 Circuit Breaker Tests

The following field tests shall be performed on circuit breakers.

3.20.7.1 Circuit Breakers, Low Voltage

a. Insulation resistance test phase-to-phase, all combinations.

b. Insulation resistance test phase-to-ground, each phase.

c. Closed breaker contact resistance test.

d. Manual and electrical operation of the breaker.

3.20.7.2 Circuit Breakers, Molded Case

a. Insulation resistance test phase-to-phase, all combinations.

b. Insulation resistance test phase-to-ground, each phase.

c. Closed breaker contact resistance test.

d. Manual operation of the breaker.

3.20.8 Motor Control Centers

a. Insulation resistance test phase-to-phase, all combinations.

b. Insulation resistance test phase-to-ground, each phase.

c. Manual and electrical operational tests.

3.21 OPERATING TESTS

After the installation is completed, and at such time as the Contracting Officer may direct, the Contractor shall conduct operating tests for approval. The equipment shall be demonstrated to operate in accordance with the specified requirements. An operating test report shall be submitted in accordance with paragraph FIELD TEST REPORTS.

3.22 FIELD SERVICE

3.22.1 Onsite Training

The Contractor shall conduct a training course for the operating staff as designated by the Contracting Officer. The training period shall consist of a total of 8 hours of normal working time and shall start after the system is functionally completed but prior to final acceptance tests. The course instruction shall cover pertinent points involved in operating, starting, stopping, servicing the equipment, as well as all major elements of the operation and maintenance manuals. Additionally, the course instructions shall demonstrate all routine maintenance operations. A VHS format video tape of the entire training shall be submitted.

3.22.2 Installation Engineer

After delivery of the equipment, the Contractor shall furnish one or more field engineers, regularly employed by the equipment manufacturer to supervise the installation of equipment, assist in the performance of the onsite tests, oversee initial operations, and instruct personnel as to the operational and maintenance features of the equipment.

3.23 ACCEPTANCE

Final acceptance of the facility will not be given until the Contractor has successfully completed all tests and after all defects in installation, material or operation have been corrected.

-- End of Section --

SECTION TABLE OF CONTENTS

DIVISION 16 - ELECTRICAL

SECTION 16528A

EXTERIOR LIGHTING

**05/01**

PART 1 GENERAL

1.1 REFERENCES
1.2 SUBMITTALS
1.3 SYSTEM DESCRIPTION
1.3.1 Lighting System
1.3.2 Electrical Requirements
1.3.3 Interface Between Lighting System and Power Distribution
1.3.4 Nameplates
1.3.5 Standard Products
1.3.6 Hazardous Locations
1.4 CORROSION PROTECTION
1.4.1 Aluminum Materials
1.4.2 Ferrous Metal Materials
1.4.2.1 Hardware
1.4.2.2 Equipment
1.4.3 Finishing

PART 2 PRODUCTS

2.1 STANDARD PRODUCT
2.2 BRACKET ARMS
2.2.1 On Steel Poles
2.3 CABLE
2.3.1 Insulated Cable
2.3.2 Bare Copper Conductors
2.4 CABLE SPLICES AND CONNECTORS
2.5 HANDHOLES
2.6 CONDUIT, DUCTS AND FITTINGS
2.6.1 Conduit, Rigid Steel
2.6.2 Conduit Coatings
2.6.3 Conduit Fittings and Outlets
2.6.3.1 Boxes, Metallic Outlets
2.6.3.2 Boxes, Nonmetallic, Outlet and Flush-Device Boxes and Covers
2.6.3.3 Boxes, Outlet for Use in Hazardous (Classified) Locations
2.6.3.4 Boxes, Switch (Enclosed), Surface Mounted
2.6.3.5 Fittings for Conduit and Outlet Boxes
2.6.3.6 ittings for Use in Hazardous (Classified) Locations
2.6.3.7 Fittings, PVC, for Use with Rigid PVC Conduit and Tubing
2.6.4 Non-Metallic Duct
2.7 GROUND RODS
2.8 POLES
2.8.1 Steel Poles
2.8.2 Anchor Bolts
2.9 ILLUMINATION
2.9.1 General Lighting

2.10 LAMPS AND BALLASTS, HIGH INTENSITY DISCHARGE (HID) SOURCES
2.10.1 High Pressure Sodium
2.10.2 Metal Halide
2.11 LUMINAIRE COMPONENTS
2.12 LIGHTING CONTROL EQUIPMENT
2.12.1 Photo-Control Devices
2.12.2 Manual Control Switches
2.12.3 Magnetic Contactor
2.13 PHOTOMETRIC DISTRIBUTION CLASSIFICATION
2.14 FIXTURES
2.14.1 Accessories
2.14.2 In-Line Fuse
2.15 CANOPY LUMINAIRES
2.16 OBSTRUCTION LIGHTS

PART 3 EXECUTION

3.1 GENERAL
3.1.1 Current Site Conditions
3.2 ENCLOSURE PENETRATIONS
3.3 PREVENTION OF CORROSION
3.3.1 Aluminum
3.3.2 Steel Conduits
3.3.3 Cold Galvanizing
3.4 CABLE INSTALLATION
3.4.1 Splices
3.4.2 Installation in Duct Lines
3.5 CONNECTIONS TO BUILDINGS
3.6 DUCT LINES
3.6.1 Requirements
3.6.2 Treatment
3.6.3 Nonencased Direct-Burial
3.6.4 Installation of Couplings
3.6.4.1 Plastic Duct
3.6.5 Duct Line Markers
3.7 HANDHOLES
3.7.1 Construction
3.8 POLE INSTALLATION
3.8.1 Pole Brackets
3.8.2 Concrete Foundations
3.8.3 Rigid Steel Conduit Ells
3.8.4 Steel Pole Installation
3.8.4.1 Cast-In-Place Foundations
3.9 LIGHTING
3.9.1 Lamps
3.9.2 Fixture Installation
3.9.2.1 Accessories
3.9.2.2 In-Line Fuses
3.10 LIGHTING CONTROL SYSTEM
3.10.1 Photo-Control
3.10.2 Magnetic Contactors
3.11 GROUNDING
3.11.1 Ground Rods
3.11.2 Items to be Grounded
3.11.3 Lighting Pole
3.12 TESTS
3.12.1 Operating Test
3.12.2 Ground Resistance Measurements

-- End of Section Table of Contents --

SECTION 16528A

EXTERIOR LIGHTING
**05/01**

PART 1 GENERAL

1.1 REFERENCES

The publications listed below form a part of this specification to the extent referenced. The publications are referred to in the text by basic designation only.

AMERICAN ASSOCIATION OF STATE HIGHWAY AND TRANSPORTATION OFFICIALS (AASHTO)

| | |
|---|---|
| AASHTO LTS-3 | (1994) Standard Specifications for Structural Supports for Highway Signs, Luminaires and Traffic Signals |

AMERICAN NATIONAL STANDARDS INSTITUTE (ANSI)

| | |
|---|---|
| ANSI C78.1351 | (1989) Electric Lamps - 250-Watt, 100-Volt S50 Single-Ended High-Pressure Sodium Lamps |
| ANSI C78.1375 | (1996) 400-Watt, M59 Single-Ended Metal-Halide Lamps |
| ANSI C78.1376 | (1996) 1000-Watt, M47 Metal-Halide Lamps |
| ANSI C80.1 | (1995) Rigid Steel Conduit - Zinc Coated |
| ANSI C82.4 | (1992) Ballasts for High-Intensity-Discharge and Low-Pressure Sodium Lamps (Multiple-Supply Type) |
| ANSI C119.1 | (1986; R 1997) Sealed Insulated Underground Connector Systems Rated 600 Volts |
| ANSI C136.2 | (1996) Luminaires, Voltage Classification of Roadway Lighting Equipment |
| ANSI C136.3 | (1995) Roadway Lighting Equipment-Luminaire Attachments |
| ANSI C136.6 | (1997) Roadway Lighting Equipment - Metal Heads and Reflector Assemblies - Mechanical and Optical Interchangeability |
| ANSI C136.9 | (1990) Roadway Lighting - Socket Support Assemblies for Use in Metal Heads - Mechanical Interchangeability |
| ANSI C136.10 | (1996) Roadway Lighting- Locking-Type Photocontrol Devices and Mating |

| | |
|---|---|
| | Receptacles - Physical and Electrical Interchangeability and Testing |
| ANSI C136.11 | (1995) Multiple Sockets for Roadway Lighting Equipment |
| ANSI C136.15 | (1997) Roadway Lighting, High Intensity Discharge and Low Pressure Sodium Lamps in Luminaires - |

AMERICAN SOCIETY FOR TESTING AND MATERIALS (ASTM)

| | |
|---|---|
| ASTM A 123/A 123M | (2000) Zinc (Hot-Dip Galvanized) Coatings on Iron and Steel Products |
| ASTM A 153/A 153M | (2000) Zinc Coating (Hot-Dip) on Iron and Steel Hardware |
| ASTM B 2 | (2000) Medium-Hard-Drawn Copper Wire |
| ASTM B 8 | (1999) Concentric-Lay-Stranded Copper Conductors, Hard, Medium-Hard, or Soft |
| ASTM B 117 | (1997) Operating Salt Spray (Fog) Apparatus |
| ASTM D 1654 | (1992) Evaluation of Painted or Coated Specimens Subjected to Corrosive Environments |

ILLUMINATING ENGINEERING SOCIETY OF NORTH AMERICA (IESNA)

| | |
|---|---|
| IESNA RP-8 | (1983; R 1993) Roadway Lighting |

INSTITUTE OF ELECTRICAL AND ELECTRONICS ENGINEERS (IEEE)

| | |
|---|---|
| IEEE C2 | (1997) National Electrical Safety Code |
| IEEE C136.13 | (1987; R 1997) Metal Brackets for Wood Poles |
| IEEE Std 81 | (1983) Guide for Measuring Earth Resistivity, Ground Impedance, and Earth Surface Potentials of a Ground System (Part 1) |

NATIONAL ELECTRICAL MANUFACTURERS ASSOCIATION (NEMA)

| | |
|---|---|
| NEMA ICS 1 | (1993) Industrial Control and Systems |
| NEMA ICS 2 | (1993) Industrial Control and Systems Controllers, Contactors, and Overload Relays Rated Not More Than 2,000 Volts AC or 750 Volts DC |
| NEMA ICS 6 | (1993) Industrial Control and Systems, Enclosures |

| | |
|---|---|
| NEMA OS 1 | (1996) Sheet-Steel Outlet Boxes, Device Boxes, Covers, and Box Supports |
| NEMA OS 2 | (1998) Nonmetallic Outlet Boxes, Device Boxes, Covers and Box Supports |
| NEMA RN 1 | (1998) Polyvinyl-Chloride (PVC) Externally Coated Galvanized Rigid Steel Conduit and Intermediate Metal Conduit |

NATIONAL FIRE PROTECTION ASSOCIATION (NFPA)

| | |
|---|---|
| NFPA 70 | (2002) National Electrical Code |

UNDERWRITERS LABORATORIES (UL)

| | |
|---|---|
| UL 6 | (1997) Rigid Metal Conduit |
| UL 44 | (1999) Thermoset-Insulated Wires and Cables |
| UL 98 | (1994; Rev thru Jun 1998) Enclosed and Dead-Front Switches |
| UL 467 | (1993; Rev thru Apr 1999) Grounding and Bonding Equipment |
| UL 486A | (1997; Rev thru Dec 1998) Wire Connectors and Soldering Lugs for Use with Copper Conductors |
| UL 514A | (1996; Rev Dec 1999) Metallic Outlet Boxes |
| UL 514B | (1996; Rev Oct 1998) Fittings for Conduit and Outlet Boxes |
| UL 514C | (1996; Rev thru Dec 1999) Nonmetallic Outlet Boxes, Flush-Device Boxes, and Covers |
| UL 854 | (1996; Rev Oct 1999) Service-Entrance Cables |
| UL 886 | (1994; Rev thru Apr 1999) Outlet Boxes and Fittings for Use in Hazardous (Classified) Locations |
| UL 1029 | (1994; Rev thru Dec 1997) High-Intensity-Discharge Lamp Ballasts |

## 1.2 SUBMITTALS

Government approval is required for submittals with a "G" designation; submittals not having a "G" designation are for information only. When used, a designation following the "G" designation identifies the office that will review the submittal for the Government. The following shall be submitted in accordance with Section 01330 SUBMITTAL PROCEDURES:

SD-02 Shop Drawings

Lighting System; G-AE
Detail Drawings; G, G-AE

Detail drawings for the complete system and for poles, lighting fixtures, bracket arms, and obstructing lighting.

As-Built Drawings;

Final as-built drawings shall be finished drawings on mylar or vellum and shall be delivered with the final test report.

SD-03 Product Data

Equipment and Materials; G-AE

Data published by the manufacturer of each item on the list of equipment and material, to permit verification that the item proposed is of the correct size, properly rated or applied, or is otherwise suitable for the application and fully conforms to the requirements specified.

Spare Parts;

Spare parts data for each item of material and equipment specified, after approval of detail drawings for materials and equipment, and not later than 4 months before the date of beneficial occupancy. The data shall include a complete list of parts, special tools, and supplies, with current unit prices and sources of supply.

SD-06 Test Reports

Operating Test; G, G-AO, G-AE

Test procedures and reports for the Operating Test. After receipt by the Contractor of written approval of the test procedures, the Contractor shall schedule the tests. The final test procedures report shall be delivered after completion of the tests.

Ground Resistance Measurements; G-AE

The measured resistance to ground of each separate grounding installation, indicating the location of the rods, the resistance of the soil in ohms per millimeter and the soil conditions at the time the measurements were made. The information shall be in writing.

SD-10 Operation and Maintenance Data

Lighting System; G-AE

A draft copy of the operation and maintenance manuals, prior to beginning the tests for use during site testing. Final copies of the manuals as specified bound in hardback, loose-leaf binders, within 30 days after completing the field test. The draft copy

used during site testing shall be updated with any changes required, prior to final delivery of the manuals. Each manual's contents shall be identified on the cover. The manual shall include names, addresses, and telephone numbers of each subcontractor installing equipment and systems, and nearest service representatives for each item of equipment for each system. The manuals shall have a table of contents and tab sheets. Tab sheets shall be placed at the beginning of each chapter or section and at the beginning of each appendix. The final copies delivered after completion of the field test shall include modifications made during installation checkout and acceptance.

## 1.3 SYSTEM DESCRIPTION

### 1.3.1 Lighting System

The lighting system shall be configured as specified and shown. The system shall include all fixtures, hardware, poles, cables, connectors, adapters and appurtenances needed to provide a fully functional lighting system.

### 1.3.2 Electrical Requirements

The equipment shall operate from a voltage source as shown, plus or minus 10 percent, and 60 Hz, plus or minus 2 percent.

### 1.3.3 Interface Between Lighting System and Power Distribution

Conductors shall include all conductors extending from the load side of the panels that serve area lighting and obstruction lighting equipment.

### 1.3.4 Nameplates

Each major component of equipment shall have a nonferrous metal or engraved plastic nameplate which shall show, as a minimum, the manufacturer's name and address, the catalog or style number, the electrical rating in volts, and the capacity in amperes or watts.

### 1.3.5 Standard Products

Materials and equipment shall be standard products of manufacturer regularly engaged in the manufacture of such products. Items of equipment shall essentially duplicate equipment that has been in satisfactory use at least 2 years prior to bid opening.

### 1.3.6 Hazardous Locations

Wiring and equipment shall be of the classes, groups, divisions indicated, and suitable for the indicated operating temperature.

## 1.4 CORROSION PROTECTION

### 1.4.1 Aluminum Materials

Aluminum shall not be used.

1.4.2 Ferrous Metal Materials

1.4.2.1 Hardware

Ferrous metal hardware shall be hot-dip galvanized in accordance with ASTM A 153/A 153M and ASTM A 123/A 123M.

1.4.2.2 Equipment

Equipment and component items, including but not limited to metal poles and ferrous metal luminaires not hot-dip galvanized or porcelain enamel finished, shall be provided with corrosion-resistant finishes which shall withstand 120 hours of exposure to the salt spray test specified in ASTM B 117 without loss of paint or release of adhesion of the paint primer coat to the metal surface in excess of 1/16 inch from the test mark. The scribed test mark and test evaluation shall have a rating of not less than 7 in accordance with TABLE 1, (procedure A) of ASTM D 1654. Cut edges or otherwise damaged surfaces of hot-dip galvanized sheet steel or mill galvanized sheet steel shall be coated with a zinc rich paint conforming to the manufacturer's standard.

1.4.3 Finishing

Painting required for surfaces not otherwise specified and finish painting of items only primed at the factory, shall be as specified in Section 09900 PAINTING, GENERAL.

PART 2 PRODUCTS

2.1 STANDARD PRODUCT

Material and equipment shall be the standard product of a manufacturer regularly engaged in the manufacture of the product and shall essentially duplicate items that have been in satisfactory use for at least 2 years prior to bid opening. Items of the same classification shall be identical including equipment, assemblies, parts, and components.

2.2 BRACKET ARMS

2.2.1 On Steel Poles

Poles shall be provided with bracket arms of the davit style and of the length indicated on drawings. Bracket arms shall conform to the design of the pole provided. The bracket arms shall be capable of supporting the equipment to be mounted on it with the maximum wind and ice loading encountered at the site. Strength of bracket arms shall be in accordance with IEEE C136.13. Steel brackets shall be galvanized. Wood bracket arms shall not be used.

2.3 CABLE

The Contractor shall provide all wire and cable not indicated as government furnished equipment. Wire and cable components shall be able to withstand the jobsite environment for a minimum of 20 years.

2.3.1 Insulated Cable

Cable shall be type USE conforming to UL 854, with copper conductors and type RHW or XHHW insulation conforming to UL 44, and shall include green

ground conductor. Cable shall be rated 600 volts. Parts of the cable system such as splices and terminations shall be rated not less than 600 volts. The size and number of conductors and the number of cables shall be as indicated. Conductors larger than No. 8 AWG shall be stranded.

2.3.2 Bare Copper Conductors

Medium-hard-drawn copper conductors shall conform to ASTM B 2 and ASTM B 8.

2.4 CABLE SPLICES AND CONNECTORS

Cable splices and connectors shall conform to UL 486A. Underground splices and connectors shall also conform to the requirements of ANSI C119.1.

2.5 HANDHOLES

Handholes shall be as indicated. Strength of handholes and their frames and covers shall conform to the requirements of IEEE C2. Handholes for low voltage cables installed in parking lots, sidewalks, and turfed areas shall be from an aggregate consisting of sand and with continuous woven glass strands having an overall compressive strength of at least 10,000 psi and a flexural strength of at least 5,000 psi. Handhole covers in parking lots, sidewalks, and turfed areas shall be of the same material as the box. Do not splice cables in below-ground handholes.

2.6 CONDUIT, DUCTS AND FITTINGS

2.6.1 Conduit, Rigid Steel

Rigid steel conduit shall conform to ANSI C80.1 and UL 6.

2.6.2 Conduit Coatings

Underground metallic conduit and fittings shall be coated with a plastic resin system conforming to NEMA RN 1, Type 40. Epoxy systems may also be used.

2.6.3 Conduit Fittings and Outlets

2.6.3.1 Boxes, Metallic Outlets

NEMA OS 1 and UL 514A.

2.6.3.2 Boxes, Nonmetallic, Outlet and Flush-Device Boxes and Covers

NEMA OS 2 and UL 514C.

2.6.3.3 Boxes, Outlet for Use in Hazardous (Classified) Locations

UL 886.

2.6.3.4 Boxes, Switch (Enclosed), Surface Mounted

UL 98.

2.6.3.5 Fittings for Conduit and Outlet Boxes

UL 514B.

2.6.3.6 ittings for Use in Hazardous (Classified) Locations

UL 886.

2.6.3.7 Fittings, PVC, for Use with Rigid PVC Conduit and Tubing

UL 514B.

2.6.4 Non-Metallic Duct

Non-metallic duct lines and fittings utilized for underground installation shall be suitable for the application. Duct shall be in accordance with Section 16375 Electrical Distribution System, Underground.

2.7 GROUND RODS

Ground rods shall be of copper clad steel conforming to UL 467 not less than 3/4 inch in diameter by 810 feet in length of the sectional type driven full length into earth.

2.8 POLES

Metal poles shall be the pole manufacturer's standard design for supporting the number of fixtures indicated. Poles shall be designed for a wind velocity of 90 mph at the base of the pole, for a wind gust factor of 1.3, and for the height and drag factors recommended by AASHTO LTS-3. The effective projected area of luminaires and other pole-mounted devices shall be taken into account in pole design. Poles shall have grounding provisions. The type of pole shaft material provided shall not be mixed on any project. Grounding connection shall be provided near the bottom of each metal pole and at each concrete pole anchor base. Scratched, stained, chipped, or dented poles shall not be installed.

2.8.1 Steel Poles

Steel poles shall be dark bronze color to match the fixture. Poles shall have tapered tubular members, either round in cross-section or polygonal. Pole shafts shall be one piece. Poles shall be welded construction with no bolts, rivets, or other means of fastening except as specifically approved. Pole markings shall be approximately 3 to 4 feet above grade and shall include manufacturer, year of manufacture, top and bottom diameters, length, and a loading tree. Attachment requirements shall be provided as indicated, including grounding provisions. Climbing facilities are not required. Bases shall be of the anchor bolt-mounted type.

2.8.2 Anchor Bolts

Anchor bolts shall be the pole manufacturer's standard, but not less than necessary to meet the pole wind and ice loading, herein and other specified design requirements.

2.9 ILLUMINATION

2.9.1 General Lighting

Luminaires, ballasts, lamps, and control devices required for general area andobstruction lighting shall be in accordance with sheetsEU.10, EI.1, EI.2, E2.01 and ED.4 .

## 2.10 LAMPS AND BALLASTS, HIGH INTENSITY DISCHARGE (HID) SOURCES

### 2.10.1 High Pressure Sodium

Lamps shall conform to ANSI C78.1351. Ballasts shall conform to ANSI C82.4, or UL 1029. High-pressure sodium lamps shall be clear.

### 2.10.2 Metal Halide

Lamps shall be made by a manufacturer with not less than 5 years experience in making metal-halide lamps. Metal-halide lamps shall conform to ANSI C78.1375 or ANSI C78.1376. Ballasts shall conform to ANSI C82.4 or UL 1029.

## 2.11 LUMINAIRE COMPONENTS

Luminaire components shall conform to the following: attachments, ANSI C136.3; voltage classification, ANSI C136.2; field identification marking, ANSI C136.15; interchangeability, ANSI C136.6 and ANSI C136.9; and sockets, ANSI C136.11.

## 2.12 LIGHTING CONTROL EQUIPMENT

### 2.12.1 Photo-Control Devices

Photo-control devices shall conform to ANSI C136.10. Each photo-control element shall be a replaceable, weatherproof, plug-in or twist-lock assembly adjustable operation range of approximately 0.5 to 5.0 foot-candles. Luminaires shall be equipped with weatherproof plug-in or twist-lock receptacle to receive the photo-control element. Obstruction lighting photo-control element shall have an adjustable operation range of 5.0 to 50 footcandles and shall be set for 35 f.c.

### 2.12.2 Manual Control Switches

Manual control switches shall conform to UL 98. The switches shall be the heavy-duty type and shall be suitable for operation on a 120 volt, 60 Hz system. The number of poles and ampere rating shall be as indicated. Switch construction shall be such that a screwdriver will be required to open the switch door when the switch is on. The selector switch shall have a minimum of three positions: ON, OFF, and AUTOMATIC. The automatic selection shall be used when photoelectric or timer control is desired. The selector switch shall interface with the lighting system magnetic contactor and control its activity.

### 2.12.3 Magnetic Contactor

Magnetic contactors shall be mechanically held, electrically operated, and shall conform to NEMA ICS 1 and NEMA ICS 2. The contactor shall be suitable for 120 volts, single phase, 60 Hz. Coil voltage shall be 120 volts. Maximum continuous ampere rating and number of poles shall be as indicated on drawings. Enclosures for contactors mounted indoors shall be NEMA ICS 6, Type 1. Each contactor shall be provided with a spare, normally open auxiliary contact. Terminal lugs shall be coordinated with the wire size. Provide hand-off-auto switch.

## 2.13 PHOTOMETRIC DISTRIBUTION CLASSIFICATION

Photometrics shall conform to IESNA RP-8.

## 2.14 FIXTURES

Standard fixtures shall be as detailed on the drawings. Special fixtures shall be as indicated on the drawings. Illustrations shown on these sheets or on the drawings are indicative of the general type desired and are not intended to restrict selection to fixtures of any particular manufacturer. Fixtures of similar design, equivalent light distribution and brightness characteristics, equal finish and quality will be acceptable as approved.

### 2.14.1 Accessories

Accessories such as straps, mounting plates, nipples, or brackets shall be provided for proper installation.

### 2.14.2 In-Line Fuse

An in-line fuse shall be provided for each fixture, except for obstruction lighting fixtures, and shall consist of a fuse and a UL approved waterproof fuse holder rated at 5 amperes, 600 volts, with insulated boots. Fuse rating shall be 600 volts.

## 2.15 CANOPY LUMINAIRES

Shall be as indicated on drawings.

## 2.16 OBSTRUCTION LIGHTS

Shall be as indicated on drawings.

# PART 3 EXECUTION

## 3.1 GENERAL

The Contractor shall install all system components, including government furnished equipment, and appurtenances in accordance with the manufacturer's instructions, IEEE C2, and contract documents, and shall furnish necessary hardware, fixtures, cables, wire, connectors, interconnections, services, and adjustments required for a complete and operable system.

### 3.1.1 Current Site Conditions

The Contractor shall verify that site conditions are in agreement with the design package. The Contractor shall report all changes to the site or conditions that will affect performance of the system to the Government. The Contractor shall not take any corrective action without written permission from the Government.

## 3.2 ENCLOSURE PENETRATIONS

Enclosure penetrations shall be from the bottom unless the system design requires penetrations from other directions. Penetrations of interior enclosures involving transitions of conduit from interior to exterior, and penetrations on exterior enclosures shall be sealed with rubber silicone sealant to preclude the entry of water. The conduit riser shall terminate in a hot-dipped galvanized metal cable terminator. The terminator shall be filled with an approved sealant as recommended by the cable manufacturer, and in such a manner that the cable is not damaged.

## 3.3 PREVENTION OF CORROSION

### 3.3.1 Aluminum

Aluminum shall not be used in contact with earth or concrete, and where connected to dissimilar metal, shall be protected by approved fittings and treatment.

### 3.3.2 Steel Conduits

Steel conduits shall not be installed within concrete slabs-on-grade. Steel conduits installed underground or under slabs-on-grade, or penetrating slabs-on-grade, shall be field wrapped with 0.010 inch thick pipe-wrapping plastic tape applied with a 50 percent overlap, or shall have a factory-applied plastic resin, epoxy coating. Zinc coating may be omitted from steel conduit which has a factory-applied epoxy coating.

### 3.3.3 Cold Galvanizing

Field welds and/or brazing on factory galvanized boxes, enclosures, conduits, etc. shall be coated with a cold galvanized paint containing at least 95 percent zinc by weight.

## 3.4 CABLE INSTALLATION

Cable and all parts of the cable system such as splices and terminations shall be rated not less than 600 volts. The size and number of conductors and the number of cables shall be as indicated. Conductors larger than No. 8 AWG shall be stranded. Each circuit shall be identified by means of fiber or nonferrous metal tags, or approved equal, in each junction box and at each terminal.

### 3.4.1 Splices

Splices below grade are not allowed. Splices above grade shall be made with sealed insulated pressure connectors and shall provide insulation and jacket equal to that of the cable. In order to prevent moisture from entering the splice, jackets shall be cut back to expose the required length of insulation between the jacket and the tapered end of the insulation.

### 3.4.2 Installation in Duct Lines

Ground and neutral conductors shall be installed in duct with the associated phase conductors. Cable splices shall be made in handholes only.

## 3.5 CONNECTIONS TO BUILDINGS

Cables shall be extended into the building as indicated and shall be properly connected to the indicated equipment. Empty conduits to the indicated equipment from a point 5 feet outside the building wall and 2 feet below finished grade are specified in Section 16415A ELECTRICAL WORK, INTERIOR. After installation of cables, conduits shall be sealed to prevent moisture or gases from entering the building.

## 3.6 DUCT LINES

### 3.6.1 Requirements

Numbers and size of ducts shall be as indicated. Duct lines shall be laid with a minimum slope of 4 inches per 100 feet. Depending on the contour of the finished grade, the high point may be at a terminal, a handhole, or between handholes. Short radius manufactured 90 degree duct bends may be used only for pole or equipment risers, unless specifically indicated as acceptable. The minimum manufactured bend radius shall be 18 inches for ducts of less than 3 inches in diameter, and 36 inches for duct 3 inches or greater in diameter. Otherwise, long sweep bends having a minimum radius of 25 feet shall be used for a change of direction of more than 5 degrees, either horizontally or vertically. Both curved and straight sections may be used to form long sweep bends, but the maximum curve used shall be 30 degrees and manufactured bends shall be used. Ducts shall be provided with end bells when duct lines terminate in manholes or handholes.

### 3.6.2 Treatment

Ducts shall be kept clean of concrete, dirt, or foreign substances during construction. Field cuts requiring tapers shall be made with proper tools and shall match factory tapers. A coupling recommended by the duct manufacturer shall be used when an existing duct is connected to a duct of different material or shape. Ducts shall be stored to avoid warping and deterioration with ends sufficiently plugged to prevent entry of any water or solid substances. Ducts shall be thoroughly cleaned before being laid. Plastic ducts shall be stored on a flat surface and protected from the direct rays of the sun.

### 3.6.3 Nonencased Direct-Burial

Top of duct lines shall be not less than 24 inches below finished grade and shall be installed with a minimum of 3 inches of earth around each duct, except that between adjacent electric power and communication ducts, 12 inches of earth is required. Bottom of trenches shall be graded toward manholes or handholes and shall be smooth and free of stones, soft spots, and sharp objects. Where bottoms of trenches comprise materials other than sand, a 3 inch layer of sand shall be laid first and compacted to approximate densities of surrounding firm soil before installing ducts. Joints in adjacent tiers of duct shall be vertically staggered at least 6 inches. The first 6 inch layer of backfill cover shall be sand compacted as previously specified. The rest of the excavation shall be backfilled and compacted in 3 to 6 inch layers. Duct banks may be held in alignment with earth. However, high tiered banks shall use a wooden frame or equivalent form to hold ducts in alignment prior to backfilling.

### 3.6.4 Installation of Couplings

Joints in each type of duct shall be made up in accordance with the manufacturer's recommendation for the particular type of duct and coupling selected and as approved.

#### 3.6.4.1 Plastic Duct

Duct joints shall be made by brushing a plastic solvent on insides of plastic coupling fittings and on outsides of duct ends. Each duct and fitting shall then be slipped together with a quick 1/4 turn to set the joint tightly.

### 3.6.5 Duct Line Markers

Duct line markers shall be provided at the ends of long duct line stubouts or for other duct locations that are indeterminate because of duct curvature or terminations at completely below-grade structures. In addition to markers, a 5 mil brightly colored plastic tape, not less than 3 inches in width and suitably inscribed at not more than 10 feet on centers with a continuous metallic backing and a corrosion-resistant 1 mil metallic foil core to permit easy location of the duct line, shall be placed approximately 12 inches below finished grade levels of such lines.

## 3.7 HANDHOLES

The exact locations shall be determined after carefully considering the locations of other utilities, grading, and paving. Exact locations shall be approved before construction is started.

### 3.7.1 Construction

Handholes shall be constructed as indicated on drawings, including appurtenances. Top, walls, and bottom shall consist of reinforced concrete. Walls and bottom shall be of monolithic construction. Concrete shall be 3000 psi at 28 days. Precast concrete handholes having the same strength and inside dimensions as cast-in-place concrete handholes may be used. In paved areas, the top of entrance covers shall be flush with the finished surface of the paving. In unpaved areas, the top of entrance covers shall be approximately 1/2 inch above the finished grade. Where finished grades are in cut areas, unmortared brick shall be installed between the top of handhole and entrance frame to temporarily elevate the entrance cover to existing grade level. Where duct lines enter walls, the sections of duct may be cast in the concrete or may enter the wall through a suitable opening. The openings around entering duct lines shall be caulked tight with lead wool or other approved material.

## 3.8 POLE INSTALLATION

Pole lengths shall provide a luminaire mounting height of 30 feet nominal. Luminaire mounting height may be increased by the height of the transformer base where required. Electrical cabling shall be provided to the light pole as specified in this Section. The mount interfaces shall have ac power connected, and the pole wiring harness shall be connected to the luminaire. Pole installation shall conform to the manufacturer's recommendations, NFPA 70, and IEEE C2. Poles shall be set straight and plumb.

### 3.8.1 Pole Brackets

Brackets shall be installed as specified by the manufacturer and as shown on drawings. Mounting hardware shall be sized appropriately to secure the mount, luminaire, and housing with wind and ice loading normally encountered at the site. Pole brackets for area lights shall have the number of tenons indicated, arranged to provide the indicated spread between each tenon. Where indicated on drawings, adjustable heads shall be installed on the brackets to position the luminaires. Identical brackets shall be used with one type of luminaire.

3.8.2 Concrete Foundations

Concrete foundations shall have anchor bolts accurately set in the foundation using a template supplied by the pole manufacturer. Once the concrete has cured, the pole shall be set on the foundation, leveled on the foundation bolts, and secured with the holding nuts. The space between the foundation and the pole base shall be grouted. Concrete and grout work shall conform to Section 03300 CAST-IN-PLACE STRUCTURAL CONCRETE. Concrete shall be 3000 psi at 28 days.

3.8.3 Rigid Steel Conduit Ells

Rigid steel conduit ells shall be provided at all poles. Rigid steel conduit shall be connected to the ells and shall extend to a minimum height of 10 feet above grade. Rigid steel conduit ells shall be provided for wood poles, where required

3.8.4 Steel Pole Installation

Poles shall be mounted on cast-in-place foundations. Conduit elbows shall be provided for cable entrances into pole interiors.

3.8.4.1 Cast-In-Place Foundations

Concrete foundations, sized as indicated, shall have anchor bolts accurately set in foundations using templates supplied by the pole manufacturer. Concrete work and grouting is specified in Section 03300 CAST-IN-PLACE STRUCTURAL CONCRETE. After the concrete has cured, pole anchor bases shall be set on foundations and leveled by shimming between anchor bases and foundations or by setting anchor bases on leveling nuts and grouting. Poles shall be set plumb. Anchor bolts shall be the manufactures standard, and not less than necessary to meet the pole wind loading and other specified design requirements.

3.9 LIGHTING

3.9.1 Lamps

Lamps of the proper type, wattage, and voltage rating shall be delivered to the project in the original containers and installed in the fixtures just before completion of the project.

3.9.2 Fixture Installation

Standard fixtures shall be installed as detailed on the drawings which accompany and form a part of this specification. Illustrations shown on these sheets or on the drawings are indicative of the general type desired and are not intended to restrict selection of fixtures to any particular manufacturer. Fixtures of similar design, equivalent light-distribution and brightness characteristics, and equal finish and quality will be acceptable as approved.

3.9.2.1 Accessories

Accessories such as straps, mounting plates, nipples, or brackets shall be installed as required for proper installation.

3.9.2.2 In-Line Fuses

An in-line fuse shall be provided for each area and canopy fixture.

3.10 LIGHTING CONTROL SYSTEM

3.10.1 Photo-Control

Area lighting luminaires shall be individually controlled by photo-control elements mounted on the heads of the luminaires. Canopy and obstruction lights shall be controlled in banks by individual photo-control element actuating a dedicated lighting contactor.

3.10.2 Magnetic Contactors

Terminal lugs shall be coordinated with the wire size. Switches shall be securely fastened to the supporting structure or wall using not less than four 1/4 inch bolts. The use of sheet metal screws will not be allowed.

3.11 GROUNDING

Grounding shall be in conformance with NFPA 70, the contract drawings, and the following. Grounding conductors shall be soft-drawn, stranded copper. Ground rods shall be driven into the earth so that after the installation is complete, the top of the ground rod will be approximately 1 foot below finished grade, except in handholes. Butt grounds shall not be used.

3.11.1 Ground Rods

The resistance to ground shall be measured using the fall-of-potential method described in IEEE Std 81. The maximum resistance of a driven ground rod shall not exceed 25 ohms under normally dry conditions. Whenever the required ground resistance is not met, additional electrodes shall be provided interconnected with grounding conductors, to achieve the specified ground resistance. The additional electrodes shall be up to 810 feet long rods spaced a minimum of 10 feet apart. In high ground resistance, UL listed chemically charged ground rods may be used. If the resultant resistance exceeds 25 ohms measured not less than 48 hours after rainfall, the Contracting Officer shall be notified immediately. Connections below grade shall be fusion welded. Connections above grade shall be fusion welded or shall use UL 467 approved connectors.

3.11.2 Items to be Grounded

Ground conductors, metallic conduits, junction boxes, and noncurrent-carrying metallic parts of equipment shall be grounded. Connections above grade shall be made with solderless connectors, and those below grade shall be made by a fusion-welding process.

3.11.3 Lighting Pole

One ground rod shall be provided at each pole. Bases of metal lighting poles shall be connected to ground rods by means of No. 8 AWG bare copper wire.

## 3.12 TESTS

### 3.12.1 Operating Test

After the installation is completed and at such time as the Contracting Officer may direct, the Contractor shall conduct an operating test for approval. The equipment shall be demonstrated to operate in accordance with the requirements specified. The test shall be performed in the presence of the Contracting Officer. The Contractor shall furnish instruments and personnel required for the test, and the Government will furnish the necessary electric power.

### 3.12.2 Ground Resistance Measurements

The resistance to ground shall be measured by the fall-of-potential method described in IEEE Std 81.

The contractor shall maintain a separate set of drawings, elementary diagrams and wiring diagrams of the lighting to be used for "as-built" drawings. This set shall be accurately kept up to date by the Contractor with all changes and additions to the lighting system. In addition to being complete and accurate, this set of drawings shall be kept neat and shall not be used for installation purposes. Upon completion of the as-built drawings, a representative of the Government will review the as-built work with the Contractor. If the as-built work is not complete, the Contractor will be so advised and shall complete the work as required.

-- End of Section --

SECTION TABLE OF CONTENTS

DIVISION 16 - ELECTRICAL

SECTION 16710A

PREMISES DISTRIBUTION SYSTEM

**09/02**

PART 1 GENERAL

1.1 REFERENCES
1.2 SYSTEM DESCRIPTION
1.3 ENVIRONMENTAL REQUIREMENTS
1.4 SUBMITTALS
1.5 QUALIFICATIONS
1.5.1 Minimum Contractor Qualifications
1.5.2 Minimum Manufacturer Qualifications
1.6 DELIVERY AND STORAGE
1.7 OPERATION AND MAINTENANCE MANUALS
1.8 RECORD KEEPING AND DOCUMENTATION
1.8.1 Cables
1.8.2 Termination Hardware

PART 2 PRODUCTS

2.1 MATERIALS AND EQUIPMENT
2.2 UNSHIELDED TWISTED PAIR CABLE SYSTEM
2.2.1 Backbone Cable
2.2.2 Horizontal Cable
2.2.3 Connecting Hardware
2.2.3.1 Telecommunications Outlets
2.2.3.2 Patch Panels
2.2.3.3 Patch Cords
2.2.3.4 Terminal Blocks
2.3 EQUIPMENT RACKS
2.3.1 Wall Mounted Open Frame
2.3.2 Cable Guides
2.4 EQUIPMENT MOUNTING BACKBOARD
2.5 TELECOMMUNICATIONS OUTLET BOXES

PART 3 EXECUTION

3.1 INSTALLATION
3.1.1 Horizontal Distribution Cable
3.1.2 Riser and Backbone Cable
3.1.3 Telecommunications Outlets
3.1.3.1 Faceplates
3.1.3.2 Cables
3.1.3.3 Pull Cords
3.1.4 Terminal Blocks
3.1.5 Unshielded Twisted Pair Patch Panels
3.1.6 Rack Mounted Equipment
3.1.7 Spare Parts
3.2 TERMINATION

3.2.1 Unshielded Twisted Pair Cable
3.3 GROUNDING
3.4 ADDITIONAL MATERIALS
3.5 ADMINISTRATION AND LABELING
3.5.1 Labeling
3.5.1.1 Labels
3.5.1.2 Cable
3.5.1.3 Termination Hardware
3.6 TESTING
3.6.1 Unshielded Twisted Pair Tests
3.6.2 Category 6 Circuits

-- End of Section Table of Contents --

# SECTION 16710A

# PREMISES DISTRIBUTION SYSTEM
**09/02**

## PART 1 GENERAL

### 1.1 REFERENCES

The publications listed below form a part of this specification to the extent referenced. The publications are referred to in the text by basic designation only.

ELECTRONIC INDUSTRIES ALLIANCE (EIA)

| | |
|---|---|
| EIA ANSI/TIA/EIA-568-B | (2001) Commercial Building Telecommunications Cabling Standard |
| EIA ANSI/TIA/EIA-568-B.2-1 | (2002) Transmission Performance Specifications for 4-pair 100 ohm Category 6 Cabling |
| EIA ANSI/TIA/EIA-569-A | (2001) Commercial Building Standard for Telecommunications Pathways and Spaces |
| EIA ANSI/TIA/EIA-606 | (1993) Administration Standard for the Telecommunications Infrastructure of Commercial Buildings |
| EIA ANSI/TIA/EIA-607 | (1994) Commercial Building Grounding/Bonding Requirement Standard |
| EIA TIA/EIA-TSB-67 | (1995) Transmission Performance Specifications for Field Testing of Unshielded Twisted-Pair Cabling Systems |

NATIONAL FIRE PROTECTION ASSOCIATION (NFPA)

| | |
|---|---|
| NFPA 70 | (2002) National Electrical Code |

### 1.2 SYSTEM DESCRIPTION

The premises distribution system shall consist of inside-plant horizontal, riser, and backbone cables and connecting hardware to transport telephone and data (including LAN) signals between equipment items in a building.

### 1.3 ENVIRONMENTAL REQUIREMENTS

Connecting hardware shall be rated for operation under ambient conditions of 32 to 140 degrees F and in the range of 0 to 95 percent relative humidity, noncondensing.

### 1.4 SUBMITTALS

Government approval is required for submittals with a "G" designation;

submittals not having a "G" designation are for information only or as otherwise designated. When used, a designation following the "G" designation identifies the office that will review the submittal for the Government. The following shall be submitted in accordance with Section 01330 SUBMITTAL PROCEDURES:

SD-02 Shop Drawings

Premises Distribution System; G, g-AE

Detail drawings including a complete list of equipment and material. Detail drawings shall contain complete wiring and schematic diagrams and other details required to demonstrate that the system has been coordinated and will function properly as a system. Drawings shall include vertical riser diagrams, equipment rack details, elevation drawings of telecommunications closet walls, outlet face plate details for all outlet configurations, sizes and types of all cables, conduits, and cable trays. Drawings shall show proposed layout and anchorage of equipment and appurtenances, and equipment relationship to other parts of the work including clearance for maintenance and operation.

Installation; G, G-AE

Record drawings for the installed wiring system infrastructure per EIA ANSI/TIA/EIA-606. The drawings shall show the location of all cable terminations and location and routing of all backbone and horizontal cables. The identifier for each termination and cable shall appear on the drawings.

SD-03 Product Data

Record Keeping and Documentation; G AE

Documentation on cables and termination hardware in accordance with EIA ANSI/TIA/EIA-606.

Spare Parts;

Lists of spare parts, tools, and test equipment for each different item of material and equipment specified, after approval of detail drawings, not later than 2 months prior to the date of beneficial occupancy. The data shall include a complete list of parts and supplies, with current unit prices and source of supply, and a list of spare parts recommended for stocking.

Manufacturer's Recommendations; G-AE

Where installation procedures, or any part thereof, are required to be in accordance with the recommendations of the manufacturer of the material being installed, printed copies of these recommendations, prior to installation shall be provided. Installation of the item will not be allowed to proceed until the recommendations are received and approved.

Test Plan; G-AO, G-AE

Test plan defining the tests required to ensure that the system meets technical, operational and performance specifications, 60

days prior to the proposed test date. The test plan must be approved before the start of any testing. The test plan shall identify the capabilities and functions to be tested, and include detailed instructions for the setup and execution of each test and procedures for evaluation and documentation of the results.

Qualifications; G-AE

The qualifications of the Manufacturer, Contractor, and the Installer to perform the work specified herein. This shall include proof of the minimum qualifications specified herein.

SD-06 Test Reports

Test Reports;

Test reports in booklet form with witness signatures verifying execution of tests. Test results will also be provided on CDR disk s in ASCII format. Reports shall show the field tests performed to verify compliance with the specified performance criteria. Test reports shall include record of the physical parameters verified during testing. Test reports shall be submitted within 14 days after completion of testing.

SD-07 Certificates

Premises Distribution System;

Written certification that the premises distribution system complies with the EIA ANSI/TIA/EIA-568-B.2-1, EIA ANSI/TIA/EIA-569-A, and EIA ANSI/TIA/EIA-606 standards.

Materials and Equipment;

Where materials or equipment are specified to conform, be constructed or tested to meet specific requirements, certification that the items provided conform to such requirements. Certification by a nationally recognized testing laboratory that a representative sample has been tested to meet the requirements, or a published catalog specification statement to the effect that the item meets the referenced standard, will be acceptable as evidence that the item conforms. Compliance with these requirements does not relieve the Contractor from compliance with other requirements of the specifications.

Installers; G, G-AE

The Contractor shall submit certification that all the installers are factory certified to install and test the provided products.

## 1.5 QUALIFICATIONS

### 1.5.1 Minimum Contractor Qualifications

All work under this section shall be performed by and all equipment shall be furnished and installed by a certified Telecommunications Contractor, hereafter referred to as the Contractor. The Contractor shall have the following qualifications in Telecommunications Systems installation:

a. Contractor shall have a minimum of 3 years experience in the application, installation and testing of the specified systems and equipment.

b. All supervisors and installers assigned to the installation of this system or any of its components shall have factory certification from each equipment manufacturer that they are qualified to install and test the provided products.

c. All installers assigned to the installation of this system or any of its components shall have a minimum of 3 years experience in the installation of the specified copper and fiber optic cable and components.

1.5.2 Minimum Manufacturer Qualifications

The equipment and hardware provided under this contract will be from manufacturers that have a minimum of 3 years experience in producing the types of systems and equipment specified.

1.6 DELIVERY AND STORAGE

Equipment delivered and placed in storage shall be stored with protection from the weather, humidity and temperature variation, dirt and dust or other contaminants.

1.7 OPERATION AND MAINTENANCE MANUALS

Commercial off the shelf manuals shall be furnished for operation, installation, configuration, and maintenance for all products provided as a part of the premises distribution system. Specification sheets for all cable, connectors, and other equipment shall be provided.

1.8 RECORD KEEPING AND DOCUMENTATION

1.8.1 Cables

A record of all installed cable shall be provided in hard copy format per EIA ANSI/TIA/EIA-606. The cable records shall include the required data fields for each cable and complete end-to-end circuit report for each complete circuit from the assigned outlet to the entry facility per EIA ANSI/TIA/EIA-606.

1.8.2 Termination Hardware

A record of all installed patch panels and outlets shall be provided in hard copy format per EIA ANSI/TIA/EIA-606. The hardware records shall include only the required data fields per EIA ANSI/TIA/EIA-606.

PART 2 PRODUCTS

2.1 MATERIALS AND EQUIPMENT

Materials and equipment shall be the standard products of a manufacturer regularly engaged in the manufacture of the products and shall be the manufacturer's latest standard design that has been in satisfactory use for at least 1 year prior to installation. Materials and equipment shall conform to the respective publications and other requirements specified

below and to the applicable requirements of NFPA 70.

## 2.2 UNSHIELDED TWISTED PAIR CABLE SYSTEM

### 2.2.1 Backbone Cable

Backbone cable shall meet the requirements of EIA ANSI/TIA/EIA-568-B for Category 3 100-ohm unshielded twisted pair cable. Cable shall be label-verified. Cable jacket shall be factory marked at regular intervals indicating verifying organization and performance level. Conductors shall be solid untinned copper 22 AWG. Cable shall be rated CMR per NFPA 70.

### 2.2.2 Horizontal Cable

Horizontal cable shall meet the requirements of EIA ANSI/TIA/EIA-568-B.2-1 for Category 6. Cable shall be label-verified. Cable jacket shall be factory marked at regular intervals indicating verifying organization and performance level. Cable shall be rated CMG or CMP, as appropriate,per NFPA 70.

### 2.2.3 Connecting Hardware

Connecting and cross-connecting hardware shall be the same category as the cable it serves. Hardware shall be in accordance with EIA ANSI/TIA/EIA-568-B.

#### 2.2.3.1 Telecommunications Outlets

Outlet assemblies used in the premises distribution system shall consist of modular jacks assembled into both simplex and duplex outlet assemblies in single or double gang covers as specified in this section and as indicated on the drawings. Wall and desk outlet plates shall come equipped with two modular jacks, with the top or left jack labeled "voice" and the bottom or right jack labeled "data" . Modular jacks shall be the same category as the cable they terminate and shall meet the requirements of EIA ANSI/TIA/EIA-568-B and shall meet the Link Test parameters as listed in EIA TIA/EIA-TSB-67 and supplemented by EIA ANSI/TIA/EIA-568-B.2-1.. Modular jack pin/pair configuration shall be T568B per EIA ANSI/TIA/EIA-568-B. Modular jacks shall be unkeyed . Faceplates shall be provided and shall be stainless steel . Mounting plates shall be provided for system furniture and shall match the system furniture in color.

#### 2.2.3.2 Patch Panels

Patch panels shall consist of eight-position modular jacks, with rear mounted type 110 insulation displacement connectors, arranged in rows or columns on 19 inch wall mounted panels. Jack pin/pair configuration shall be T568B per EIA ANSI/TIA/EIA-568-B. Jacks shall be unkeyed . Panels shall be labeled with alphanumeric x-y coordinates . The modular jacks shall conform to the requirements of EIA ANSI/TIA/EIA-568-B, and shall be rated for use with Category 6 cable in accordance with EIA ANSI/TIA/EIA-568-B.2-1 and shall meet the Link Test parameters as listed in EIA TIA/EIA-TSB-67 and supplemented by EIA ANSI/TIA/EIA-568-B.2-1.

#### 2.2.3.3 Patch Cords

Patch cords shall be cable assemblies consisting of flexible, twisted pair stranded wire with eight-position plugs at each end. Cable shall be label-verified. Cable jacket shall be factory marked at regular intervals

indicating verifying organization and performance level. Patch cords shall be wired straight through; pin numbers shall be identical at each end and shall be paired to match T568B patch panel jack wiring per EIA ANSI/TIA/EIA-568-B. Patch cords shall be unkeyed . Patch cords shall be factory assembled. Patch cords shall conform to the requirements of EIA ANSI/TIA/EIA-568-B.2-1 for Category 6.

2.2.3.4 Terminal Blocks

Terminal blocks shall be wall mounted wire termination units consisting of insulation displacement connectors mounted in plastic blocks, frames or housings. Blocks shall be type 110 which meet the requirements of EIA ANSI/TIA/EIA-568-B, and shall be rated for use with Category 6 cable in accordance with EIA ANSI/TIA/EIA-568-B.2-1 and shall meet the Link Test parameters as listed in EIA TIA/EIA-TSB-67 and supplemented by EIA ANSI/TIA/EIA-568-B.2-1. Blocks shall be mounted on standoffs and shall include cable management hardware. Insulation displacement connectors shall terminate 22 or 24 gauge solid copper wire as a minimum, and shall be connected in pairs so that horizontal cable and connected jumper wires are on separate connected terminals.

2.3 EQUIPMENT RACKS

2.3.1 Wall Mounted Open Frame

Wall mounted open frame equipment racks shall be aluminum relay racks to mount equipment 19 inches wide with standoff brackets for wall mounting. Uprights shall be drilled and tapped 12-24 in a 1/2 inch pattern. Standoff brackets shall be of sufficient length for a 6 inch clearance between rack and wall. Wall mounted open frame racks shall be hinged. AC outlets shall be provided as shown.

2.3.2 Cable Guides

Cable guides shall be specifically manufactured for the purpose of routing cables, wires and patch cords horizontally and vertically on 19 inch equipment racks. Cable guides shall consist of ring or bracket-like devices mounted on rack panels for horizontal use or individually mounted for vertical use. Cable guides shall mount to racks by screws and/or nuts and lockwashers.

2.4 EQUIPMENT MOUNTING BACKBOARD

Plywood backboards shall be provided, sized as shown, painted with white or light colored paint.

2.5 TELECOMMUNICATIONS OUTLET BOXES

Electrical boxes for telecommunication outlets shall be 4-11/16 inch square by 2-1/8 inches deep with minimum 3/8 inch deep single or two gang plaster ring as shown. Provide a minimum 1 inch conduit.

PART 3 EXECUTION

3.1 INSTALLATION

System components and appurtenances shall be installed in accordance with NFPA 70, manufacturer's instructions and as shown. Necessary interconnections, services, and adjustments required for a complete and

operable signal distribution system shall be provided. Components shall be labeled in accordance with EIA ANSI/TIA/EIA-606. Penetrations in fire-rated construction shall be firestopped in accordance with Section 07840 FIRESTOPPING. Conduits, outlets and raceways shall be installed in accordance with Section 16415A ELECTRICAL WORK, INTERIOR. Wiring shall be installed in accordance with EIA ANSI/TIA/EIA-568-B and as specified in Section 16415A ELECTRICAL WORK, INTERIOR. Wiring, and terminal blocks and outlets shall be marked in accordance with EIA ANSI/TIA/EIA-606. Cables shall not be installed in the same cable tray, utility pole compartment, or floor trench compartment with ac power cables. Cables not installed in conduit or wireways shall be properly secured and neat in appearance and, if installed in plenums or other spaces used for environmental air, shall comply with NFPA 70 requirements for this type of installation.

### 3.1.1 Horizontal Distribution Cable

The rated cable pulling tension shall not be exceeded. Cable shall not be stressed such that twisting, stretching or kinking occurs. Cable shall not be spliced. Fiber optic cables shall be installed either in conduit or through type cable trays to prevent microbending losses. Copper cable not in a wireway shall be suspended a minimum of 8 inches above ceilings by cable supports no greater than 60 inches apart. Cable shall not be run through structural members or in contact with pipes, ducts, or other potentially damaging items. Placement of cable parallel to power conductors shall be avoided, if possible; a minimum separation of 12 inches shall be maintained when such placement cannot be avoided. Cables shall be terminated; no cable shall contain unterminated elements. Minimum bending radius shall not be exceeded during installation or once installed. Cable ties shall not be excessively tightened such that the transmission characteristics of the cable are altered.

### 3.1.2 Riser and Backbone Cable

Vertical cable support intervals shall be in accordance with manufacturer's recommendations. Cable bend radius shall not be less than ten times the outside diameter of the cable during installation and once installed. Maximum tensile strength rating of the cable shall not be exceeded. Cable shall not be spliced.

### 3.1.3 Telecommunications Outlets

#### 3.1.3.1 Faceplates

As a minimum each jack shall be labeled as to its function and a unique number to identify cable link.

#### 3.1.3.2 Cables

Unshielded twisted pair and fiber optic cables shall have a minimum of 6 inches of slack cable loosely coiled into the telecommunications outlet boxes. Minimum manufacturers bend radius for each type of cable shall not be exceeded.

#### 3.1.3.3 Pull Cords

Pull cords shall be installed in all conduit serving telecommunications outlets which do not initially have cable installed.

3.1.4 Terminal Blocks

Terminal blocks shall be mounted in orderly rows and columns. Adequate vertical and horizontal wire routing areas shall be provided between groups of blocks. Industry standard wire routing guides shall be utilized.

3.1.5 Unshielded Twisted Pair Patch Panels

Patch panels shall be mounted in equipment racks with sufficient modular jacks to accommodate the installed cable plant plus 10 percent spares. Cable guides shall be provided above, below and between each panel.

3.1.6 Rack Mounted Equipment

Equipment to be rack mounted shall be securely fastened to racks by means of the manufacturer's recommended fasteners.

3.1.7 Spare Parts

The Contractor shall provide spare parts data for each different item of material and equipment specified, after approval of the related submittals and not later than the start of the field tests.

3.2 TERMINATION

Cables and conductors shall sweep into termination areas; cables and conductors shall not bend at right angles. Manufacturer's minimum bending radius shall not be exceeded. When there are multiple system type drops to individual workstations, relative position for each system shall be maintained on each system termination block or patch panel.

3.2.1 Unshielded Twisted Pair Cable

Each pair shall be terminated on appropriate outlets, terminal blocks or patch panels. No cable shall be unterminated or contain unterminated elements. Pairs shall remain twisted together to within the proper distance from the termination as specified in EIA ANSI/TIA/EIA-568-B. Conductors shall not be damaged when removing insulation. Wire insulation shall not be damaged when removing outer jacket.

3.3 GROUNDING

Signal distribution system ground shall be installed in the telecommunications entrance facility and in each telecommunications closet in accordance with EIA ANSI/TIA/EIA-607 and Section 16415A ELECTRICAL WORK, INTERIOR. Equipment racks shall be connected to the electrical safety ground.

3.4 ADDITIONAL MATERIALS

The Contractor shall provide the following additional materials required for facility startup.

a. 10 of each type outlet.

b. 10 of each type cover plate.

d. 4 Patch cords of 10 feet for each telecommunications closet.

e. 1 Set of any and all special tools required to establish a cross connect and to change and/or maintain a terminal block.

## 3.5 ADMINISTRATION AND LABELING

### 3.5.1 Labeling

#### 3.5.1.1 Labels

All labels shall be in accordance with EIA ANSI/TIA/EIA-606.

#### 3.5.1.2 Cable

All cables will be labeled using color labels on both ends with unencoded identifiers per EIA ANSI/TIA/EIA-606.

#### 3.5.1.3 Termination Hardware

All workstation outlets and patch panel connections will be labeled using color coded labels with unencoded identifiers per EIA ANSI/TIA/EIA-606.

## 3.6 TESTING

Materials and documentation to be furnished under this specification are subject to inspections and tests. All components shall be terminated prior to testing. Equipment and systems will not be accepted until the required inspections and tests have been made in accordance with the approved Test Plan submitted by the Contractor, demonstrating that the signal distribution system conforms to the specified requirements, and that the required equipment, systems, and documentation have been provided. The Contractor shall submit Test Reports as they are completed.

### 3.6.1 Unshielded Twisted Pair Tests

All metallic cable pairs shall be tested for proper identification and continuity. All opens, shorts, crosses, grounds, and reversals shall be corrected. Correct color coding and termination of each pair shall be verified in the communications closet and at the outlet. Horizontal wiring shall be tested from and including the termination device in the communications closet to and including the modular jack in each room. Backbone wiring shall be tested end-to-end, including termination devices, from terminal block to terminal block, in the respective communications closets. These test shall be completed and all errors corrected before any other tests are started.

### 3.6.2 Category 6 Circuits

All category 6 circuits shall be tested using a test set that meets the Class II accuracy requirements of EIA TIA/EIA-TSB-67 standard, including the additional tests and test set accuracy requirements of EIA ANSI/TIA/EIA-568-B.2-1. Testing shall use the Basic Link Test procedure of EIA TIA/EIA-TSB-67, as supplemented by EIA ANSI/TIA/EIA-568-B.2-1. Cables and connecting hardware which contain failed circuits shall be replaced and retested to verify the standard is met.

-- End of Section --

SECTION TABLE OF CONTENTS

DIVISION 16 - ELECTRICAL

SECTION 16711A

TELEPHONE SYSTEM, OUTSIDE PLANT

**11/01**

PART 1 GENERAL

1.1 REFERENCES
1.2 SYSTEM DESCRIPTION
1.3 SUBMITTALS
1.4 QUALIFICATIONS
1.4.1 Cable Installers
1.4.2 Cable Splicing and Termination
1.4.3 Manufacturers
1.5 DELIVERY AND STORAGE
1.5.1 Cable Requirements-
1.5.2 Equipment

PART 2 PRODUCTS

2.1 STANDARD PRODUCTS
2.2 CABLE
2.2.1 Copper Conductor Cable
2.2.1.1 Underground
2.2.1.2 Screened
2.3 CLOSURES
2.3.1 Copper Conductor Closures
2.3.1.1 Buried Closure
2.3.1.2 Underground Closure
2.4 CABLE SPLICES AND ORGANIZERS
2.4.1 Copper Cable Splices
2.5 CABLE TERMINALS
2.5.1 Pedestal-Type Cable Terminals
2.5.2 Cross-connect Cable Terminals
2.6 TELEPHONE HANDHOLES AND DUCT
2.6.1 New Telephone Handholes
2.6.2 Duct/Conduit
2.6.3 Innerduct
2.7 CONNECTOR BLOCKS
2.8 PROTECTOR MODULES
2.9 MISCELLANEOUS ITEMS
2.9.1 Shield Connectors
2.9.2 Grounding Braid
2.9.3 Warning Tape

PART 3 EXECUTION

3.1 INSTALLATION
3.1.1 Cable Inspection and Repair
3.1.2 Buried Cable
3.1.2.1 Cable Depth

3.1.2.2 Telephone Cable Bends
3.1.2.3 Cable Protection
3.1.2.4 Backfill for Rocky Soil
3.1.3 Underground Cable
3.1.3.1 Cable Pulling
3.1.3.2 Penetrations for Cable Access
3.1.3.3 Cable Bends
3.1.4 Telephone Handholes and Ducts
3.1.4.1 Innerduct Installation
3.1.4.2 Pull Cord
3.1.5 Surge Protection
3.2 SPLICING
3.2.1 Copper Conductor Splices
3.3 GROUNDING
3.3.1 Incoming Outside Plant Cables
3.3.2 Cable Stubs
3.3.3 Shields
3.3.4 Protection Assemblies
3.3.5 Telephone Handholes
3.4 CUTOVER AND RECORDS
3.5 ACCEPTANCE TESTS
3.5.1 Copper Conductor Cable

-- End of Section Table of Contents --

SECTION 16711A

TELEPHONE SYSTEM, OUTSIDE PLANT
**11/01**

PART 1 GENERAL

1.1 REFERENCES

The publications listed below form a part of this specification to the extent referenced. The publications are referred to in the text by basic designation only.

AMERICAN NATIONAL STANDARDS INSTITUTE (ANSI)

| | |
|---|---|
| ANSI C62.61 | (1993) Gas Tube Surge Arresters on Wire Line Telephone Circuits |

AMERICAN SOCIETY FOR TESTING AND MATERIALS (ASTM)

| | |
|---|---|
| ASTM D 2239 | (1999) Polyethylene (PE) Plastic Pipe (SIDR-PR) Based on Controlled Inside Diameter |

INSTITUTE OF ELECTRICAL AND ELECTRONICS ENGINEERS (IEEE)

| | |
|---|---|
| IEEE C2 | (1997) National Electrical Safety Code |

NATIONAL FIRE PROTECTION ASSOCIATION (NFPA)

| | |
|---|---|
| NFPA 70 | (2002) National Electrical Code |

U.S. DEPARTMENT OF AGRICULTURE (USDA)

| | |
|---|---|
| RUS 345-50 | (1979) Trunk Carrier Systems |
| RUS 345-65 | (1985) Shield Bonding Connectors |
| RUS 345-72 | (1995) Field Splice Closures |
| RUS REA Bull 345-151 | (1989) Conduit and Manhole Construction, REA Form 515c |
| RUS Bull 1751F-643 | (1998) Underground Plant Design |
| RUS Bull 1753F-302 | (1994) Outside Plant Housings and Serving Area Interface Systems |
| RUS Bull 1753F-401 (PC-2) | (1995) RUS Standard for Splicing Copper and Fiber Optic Cables |
| RUS IP 344-2 | (1999) List of Materials Accceptable for Use on Telecommunications Systems of RUS Borrowers |
| RUS REA Bull 1751F-641 | (1995) Construction of Buried Plant |

| | |
|---|---|
| RUS REA Bull 1753F-201 | (1976) Acceptance Tests and Measurements of Telephone Plant |
| RUS REA Bull 1753F-205 | (1993) REA Specification for Filled Telephone Cables |
| RUS REA Bull 1753F-207 | (1994) Terminating (TIP) Cable |
| RUS REA Bull 1753F-208 | (1993) Filled Telephone Cables with Expanded Insulation |

UNDERWRITERS LABORATORIES (UL)

| | |
|---|---|
| UL 497 | (1995; Rev Oct 1999) Protectors for Paired Conductor Communication Circuits |

## 1.2 SYSTEM DESCRIPTION

The outside plant system shall consist of all cable, conduit, pedestal-type cable terminals telephone handholes, etc. required to provide signal paths from the closest point of presence to the new facility, including terminating cables, lightning and surge protection modules at the entry facility. The work consists of furnishing, installing, testing and making operational a complete outside plant system for continuous use.

## 1.3 SUBMITTALS

Government approval is required for submittals with a "G" designation; submittals not having a "G" designation are for information only. When used, a designation following the "G" designation identifies the office that will review the submittal for the Government. The following shall be submitted in accordance with Section 01330 SUBMITTAL PROCEDURES:

SD-02 Shop Drawings

Telephone System; G-AE
Installation; G-AE

Detail drawings, consisting of a complete list of equipment and material, including manufacturer's descriptive and technical literature, performance charts and curves, and catalog cuts. Detail drawings shall also contain complete configuration information, wiring diagrams and any other details required to demonstrate that the cable system has been coordinated to support the transmission systems identified in the specifications and drawings. Drawings shall show proposed layout and anchorage of equipment and appurtenances, and equipment relationship to other parts of the work including clearance for maintenance and operations.

Record Drawings; G-AE

Record drawings for the installed wiring system showing the actual location of all cable terminations, splices, routing, and size and type of all cables. The identifier for each termination and cable shall appear on the drawings. The drawings shall include gauge and pair or fiber count for each cable, duct and

innerduct arrangement, or conductor assignment of outside plant, and protector and connector block layout at the termination points after installation.

SD-03 Product Data

Spare Parts;
Equipment; G, G-AE

A data list of recommended spare parts, tools, and test equipment for each different item of material and equipment specified prior to beneficial occupancy. The data shall include a complete list of parts and supplies, with current unit prices and source of supply.

Installation; G, G-AE

Printed copies of the manufacturer's recommendations for the material being installed, prior to installation. Installation of the item will not be allowed to proceed where installation procedures, or any part thereof, are required to be in accordance with those recommendations until the recommendations are received and approved.

Acceptance Tests; G, G-AE

Test plans defining all tests required to ensure that the system meets specified requirements. The test plans shall define milestones for the tests, equipment, personnel, facilities, and supplies required. The test plans shall identify the capabilities and functions to be tested.

Cutover and Records; G, G-AO, G-AE

The cutover plan shall provide procedures and schedules for relocation of facility station numbers without interrupting service to any active location.

SD-06 Test Reports

Acceptance Tests; G, G-AE

Test reports in booklet form showing all field tests performed, upon completion and testing of the installed system. Measurements shall be tabulated on a pair by pair or strand by strand basis.

SD-07 Certificates

Telephone System; G, G-AE

Proof that the items furnished under this section conform to the specified requirements in FCC, ICEA, REA, RUS, ANSI, ASTM, NFPA, EIA, or UL, where materials and equipment are so specified.

Qualifications; G, G-AE

The qualifications of the manufacturer, splicer, and installation supervisor as specified.

## 1.4 QUALIFICATIONS

### 1.4.1 Cable Installers

Installation shall be under the direct supervision of an individual with a minimum of 3 years experience in the installation of the specified copper cable and components.

### 1.4.2 Cable Splicing and Termination

All cable splicers shall have training in the proper techniques and have a minimum of 3 years experience in splicing and terminating the specified cables. Modular splices shall be performed by factory certified personnel or under direct supervision of factory trained personnel for products used.

### 1.4.3 Manufacturers

The cable, equipment, and hardware provided shall be from manufacturers that have a minimum of 3 years experience in producing the types of cable, equipment, and hardware specified.

## 1.5 DELIVERY AND STORAGE

### 1.5.1 Cable Requirements-

All cable shall be shipped on reels. The diameter of the drum shall be large enough to prevent damage to the cable during reeling and unreeling. The reels shall be constructed to prevent damage during shipment and handling. The outer end of the cable shall be securely fastened to the reel head to prevent the cable from becoming loose in transit. The inner end of the cable shall project into a slot in the side of the reel, or into a housing on the inner slot of the drum, with sufficient length to make it available for testing. The inner end shall be fastened to prevent the cable from becoming loose during installation. End seals shall be applied to each of the cables to prevent moisture from entering the cable. The reels with cable shall be suitable for outside storage conditions when the temperature ranges from minus 40 to plus 148 degrees F, with relative humidity from 0 to 100 percent.

### 1.5.2 Equipment

All equipment shall be stored with protection from the weather, humidity and temperature variations, dirt and dust, or other contaminants, in accordance with the manufacturer's requirements.

# PART 2 PRODUCTS

## 2.1 STANDARD PRODUCTS

Materials and equipment shall be the standard products of a manufacturer regularly engaged in the manufacture of such products and shall be the manufacturer's latest standard design that has been in satisfactory use for at least 2 years prior to bid opening. Each major component of equipment shall have the manufacturer's name and type identified on the equipment. All products supplied shall be specifically designed and manufactured for use with outside plant communications systems. All items of the same class of equipment shall be the products of a single manufacturer.

## 2.2 CABLE

### 2.2.1 Copper Conductor Cable

Copper conductor cable shall conform to the following:

#### 2.2.1.1 Underground

Cable shall be manufactured per RUS REA Bull 1753F-205 or RUS REA Bull 1753F-208. A 8 mil coated aluminum or 5 mil copper metallic shield shall be provided. Provide 25 pair PE-39, #24 AWG copper, jell-filled outside plant service entrance cable.

#### 2.2.1.2 Screened

Screened cable shall comply with RUS REA Bull 1753F-205 or RUS REA Bull 1753F-208.

## 2.3 CLOSURES

### 2.3.1 Copper Conductor Closures

#### 2.3.1.1 Buried Closure

Buried closure shall conform to RUS 345-72.

#### 2.3.1.2 Underground Closure

Underground closures shall conform to RUS 345-72. The closure shall be of thermoplastic, thermoset, or stainless steel material and be suitable for use in a vault or manhole.

## 2.4 CABLE SPLICES AND ORGANIZERS

### 2.4.1 Copper Cable Splices

All cables greater than 25 pairs shall be spliced using modular splicing connectors, which accommodate 25 pairs of conductors at a time. The correct connector size shall be used to accommodate the wire gauge of the cable to be spliced. The connectors used shall be listed in RUS IP 344-2.

## 2.5 CABLE TERMINALS

### 2.5.1 Pedestal-Type Cable Terminals

Pedestal-type cable terminals shall conform to RUS Bull 1753F-302.

### 2.5.2 Cross-connect Cable Terminals

Cross-connect cable terminals shall be weatherproofed for outdoor use and suitable for pad mounting. The terminal shall be equipped with mounting columns and distribution rings for jumper-wire routing. The terminal shall be of aluminum or steel construction and ribbed for strength.

## 2.6 TELEPHONE HANDHOLES AND DUCT

All telephone handholes and duct products shall conform to RUS Bull 1751F-643.

2.6.1 New Telephone Handholes

New telephone handholes shall conform to the requirements of RUS REA Bull 345-151. Pullboxes shall be as indicated on drawings and shall only be used for temporary use during phased construction.

2.6.2 Duct/Conduit

Conduit shall be furnished as specified in Sections 16415A ELECTRICAL WORK, INTERIOR and 16375A ELECTRICAL DISTRIBUTION SYSTEM, UNDERGROUND and as shown on project drawings.

2.6.3 Innerduct

Innerduct shall be SIDR 11.5 polyethylene plastic pipe conforming to ASTM D 2239.

2.7 CONNECTOR BLOCKS

Connector blocks consisting of flame-retardant molded plastic fastened to a metal mounting bar shall be provided to terminate the outside plant cable as shown. The connector blocks shall be of 100-pair block size and equipped with protection modules. The connector blocks shall be 24 gauge stub type. The cable stubs shall be 100 pair and conform to RUS REA Bull 1753F-207.

2.8 PROTECTOR MODULES

The protector modules shall be of the two-element gas tube type. Protection modules shall be heavy duty, A>10 kA, B>400, C>65A where A is the maximum single impulse discharge current, B is the impulse life and C is the AC discharge current per ANSI C62.61. The gas modules shall shunt high voltage to ground, fail short, be equipped with an external spark gap and heat coils, and shall comply with UL 497.

2.9 MISCELLANEOUS ITEMS

2.9.1 Shield Connectors

Shield connectors shall make a stable, low-impedance electrical connection between the shield of the communications cable and a conductor such as a strap, bar, or wire. The connector shall be made of tin-plated tempered brass. Shield bond connectors shall comply with RUS 345-65.

2.9.2 Grounding Braid

Grounding braid shall provide low electrical impedance connections for dependable shield bonding. The braid shall be made from flat tin-plated copper.

2.9.3 Warning Tape

Marking and locating tape shall be acid and alkali resistant polyethylene film, 6 inches wide with a minimum strength of 1750 psi lengthwise and 1500 psi crosswise. The tape shall be manufactured with integral wires, foil backing, or other means to enable detection by a metal detector when the tape is buried up to 3 feet deep. The metallic core shall be encased in a protective jacket or provided with other means to protect it from corrosion and shall be specifically manufactured for marking and locating

underground utilities. The warning tape shall be orange in color and continuously imprinted with the words "WARNING - COMMUNICATIONS CABLE BELOW" at not more than 48 inch intervals.

## PART 3 EXECUTION

### 3.1 INSTALLATION

All system components and appurtenances shall be installed in accordance with the manufacturer's instructions and as shown. All installation work shall be done in accordance with the safety requirements set forth in the general requirements of IEEE C2 and NFPA 70.

#### 3.1.1 Cable Inspection and Repair

All cable and wire used in the construction of the project shall be handled with care. Each reel shall be inspected for cuts, nicks or other damage. All damage shall be repaired to the satisfaction of the Contracting Officer. The reel wrap shall remain intact on the reel until the cable or wire is ready to be placed.

#### 3.1.2 Buried Cable

Buried cable installation shall be accomplished in accordance with RUS REA Bull 1751F-641.

##### 3.1.2.1 Cable Depth

Cables placed in soil shall be at a minimum depth of 24 inches. Cables placed at ditch crossings shall be at a minimum depth of 36 inches. A warning tape shall be placed above the cable and approximately 12 inches below ground level.

##### 3.1.2.2 Telephone Cable Bends

Telephone cable bends shall have a radius of not less than 10 times the cable diameter.

##### 3.1.2.3 Cable Protection

Unless otherwise shown or specified, direct buried cable shall be protected in accordance with Table 300.5 of NFPA 70. Where additional protection is required, cable may be placed in galvanized iron pipe (GIP) sized on a maximum fill of 40% of cross-sectional area, or in concrete encased 4 inch PVC pipe. Conduits shall extend at least 6 inches per 12 inches burial depth beyond the edge of the surface where cable protection is required; all conduits shall be sealed on each end. Conduit may be installed by jacking or trenching. Trenches shall be backfilled with earth and mechanically tamped at 6 inch lifts so that the earth is restored to the same density, grade and vegetation as adjacent undisturbed material.

##### 3.1.2.4 Backfill for Rocky Soil

When placing cable in a trench in rocky soil, the cable shall be cushioned by a fill of sand or selected soil at least 2 inches thick on the floor of the trench before placing the cable or wire. The backfill for at least 4 inches above the wire or cable shall be free from stones, rocks, or other hard or sharp materials which might damage the cable or wire. If the buried cable is placed less than 24 inches in depth, a protective cover of

metal shall be used.

3.1.3 Underground Cable

Underground cable installation shall be accomplished in accordance with the requirements set forth in RUS REA Bull 1751F-641.

3.1.3.1 Cable Pulling

For cable installed in ducts and conduit, a cable feeder guide shall be used, between the cable reel and the face of the duct and conduit, to protect the cable and guide it into the duct and conduit as it is paid off the reel. As the cable is paid off the reel, it shall be inspected for jacket defects. Precautions shall be taken during installation to prevent the cable from being kinked or crushed. A pulling eye shall be attached to the cable and used to pull the cable through the duct and conduit system. Cable shall be hand fed and guided through each manhole. As the cable is paid off the reel into the cable feeder guide, it shall be sufficiently lubricated with a type of lubricant recommended by the cable manufacturer. Where the cable is pulled through a manhole, additional lubricant shall be applied at all intermediate manholes. Dynamometers or load-tension instruments shall be used to ensure that the pulling line tension does not exceed the installation tension value specified by the cable manufacturer. The mechanical stress placed upon a cable during installation shall not cause the cable to be twisted or stretched.

3.1.3.2 Penetrations for Cable Access

Penetrations in walls, ceilings or other parts of the building, made to provide for cable access, shall be caulked and sealed. Where conduits and ducts pass through fire walls, fire partitions, above grade floors, and fire rated chase walls, the penetration shall be sealed with fire stopping materials as specified in section 07840 FIRE STOPPING. Fire stopped penetrations shall not compromise the fire rating of the walls or floors. All underground building entries shall be through waterproof facilities.

3.1.3.3 Cable Bends

Telephone cable bends shall have a radius of not less than 10 times the cable diameter. Only large radius sweeps shall be used in conduit runs and shall not exceed a cumulative 90 degrees between manholes.

3.1.4 Telephone Handholes and Ducts

Telephone handholes and duct systems shall be installed in accordance with Section 16375AELECTRICAL DISTRIBUTION SYSTEM, UNDERGROUND. Telephone handholes shall be placed in line with the main duct. Splice cases shall be mounted in the center on the long sides. Lateral conduits shall exit the long sides near the corners.

3.1.4.1 Innerduct Installation

Innerduct shall be pulled through duct system in continuous sections. Splices, joints, couplings, or connections of any type will not be allowed between handholes and pedestals and/or buildings. nnerduct shall be plugged at both ends with polyurethane foam duct seal; this material shall also be inserted between the innerduct and the duct if cables are placed in the innerducts. A pull wire shall be installed in each innerduct. New unoccupied innerducts shall be trimmed leaving 2 inches exposed.

3.1.4.2 Pull Cord

Pull cords of 3/8 inch polypropylene shall be installed in all unused ducts and inner-ducts with a minimum of 2 feet spare cord protruding from each end.

3.1.5 Surge Protection

All cables and conductors, which serve as communication lines, shall have surge protection meeting the requirements of RUS 345-50 installed at the entry facility.

3.2 SPLICING

3.2.1 Copper Conductor Splices

Copper conductor cable splicing shall be accomplished in accordance with RUS Bull 1753F-401 (PC-2). Modular splicing shall be used on all cables larger than 25 pairs.

3.3 GROUNDING

Except where specifically indicated otherwise, all exposed non-current carrying metallic parts of telephone equipment, cable sheaths, cable splices, and terminals shall be grounded. Grounding shall be in accordance with requirements of NFPA 70, Articles 800-33 and 800-40.

3.3.1 Incoming Outside Plant Cables

All incoming outside plant cable shields shall be bonded directly to the ground bus bar at the telephone backboard.

3.3.2 Cable Stubs

All shields of cable stubs shall be bonded to the ground bus bar located on the telephone backboard.

3.3.3 Shields

The shields of all incoming cables shall not be bonded across the splice to the cable stubs.

3.3.4 Protection Assemblies

The protector assemblies shall be mounted directly on the vertical frame ironwork. The assemblies mounted on each vertical frame shall be connected with a No. 6 AWG copper conductor to provide a low resistance path to the TGB.

3.3.5 Telephone Handholes

The shields of all cables in each handholes shall be bonded together by a bonding wire or ribbon. At intermediate handholes, where the cable is pulled through without a sheath opening, bonds are not required. If the handholes has a lacerating bonding ribbon, the shields of spliced cables shall be attached to it.

## 3.4 CUTOVER AND RECORDS

All necessary transfers and cutovers, shall be accomplished by the Contractor.

## 3.5 ACCEPTANCE TESTS

The Contractor shall provide all personnel, equipment, instrumentation, and supplies necessary to perform all required testing. Notification of any planned testing shall be given to the Contracting Officer at least 14 days prior to any test; testing shall not proceed until after the Contractor has received written Contracting Officer's approval of the test plans as specified. The test plans shall define all the tests required to ensure that the system meets technical, operational, and performance specifications. The test plans shall define milestones for the tests, equipment, personnel, facilities, and supplies required. The test plans shall identify the capabilities and functions to be tested.

### 3.5.1 Copper Conductor Cable

The following acceptance tests shall be performed in accordance with RUS REA Bull 1753F-201:

a. Shield continuity.

b. Conductor continuity.

c. Conductor insulation resistance.

d. Structural return loss.

e. Cable insertion loss and loss margin at carrier frequencies.

f. Shield ground for single jacketed cables.

g. DC loop resistance.

-- End of Section --