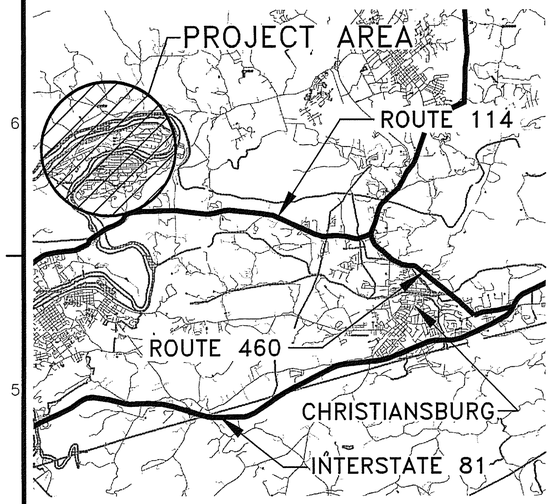


# SETTLING BASIN 403-1
# RADFORD ARMY AMMUNITION PLANT
## RADFORD, VIRGINIA

| SHEET NO. | TITLE | NORFOLK DISTRICT FILE NO. |
|---|---|---|
| T-1 | COVER SHEET | RAD 274.0001 |
| T-2 | JOB SITE AND ORIENTATION MAP | RAD 274.0002 |
| T-3 | ABBREVIATIONS AND LEGEND | RAD 274.0003 |
| T-4 | INDEX PLAN | RAD 274.0004 |
| C-131 | SETTLING BASIN DIMENSIONAL LAYOUT PLAN | RAD 274.0005 |
| C-132 | SETTLING BASIN SITE PLAN | RAD 274.0006 |
| C-331 | SETTLING BASIN STORM DRAIN PROFILE | RAD 274.0007 |
| C-502 | SETTLING BASIN EROSION AND SEDIMENT CONTROL DETAILS | RAD 274.0008 |
| C-503 | SETTLING BASIN DRAINAGE DETAILS | RAD 274.0009 |
| S-001 | GENERAL NOTES AND SETTLING BASIN SECTIONS | RAD 274.0010 |
| S-101 | SETTLING BASIN 403-1 - PLAN | RAD 274.0011 |
| S-301 | SETTLING BASIN - SECTIONS | RAD 274.0012 |
| S-302 | SETTLING BASIN - SECTIONS | RAD 274.0013 |
| S-501 | SETTLING BASIN - TYPICAL DETAILS | RAD 274.0014 |
| S-502 | SETTLING BASIN - TYPICAL DETAILS | RAD 274.0015 |
| S-504 | MISCELLANEOUS DETAILS | RAD 274.0016 |
| E-101 | SITE PLAN - NOTES AND DETAILS | RAD 274.0017 |
| E-501 | DETAILS | RAD 274.0018 |
| E-502 | DETAILS AND DIAGRAMS | RAD 274.0019 |
| | | |
| | | |
| | | |
| | | |
| | | |

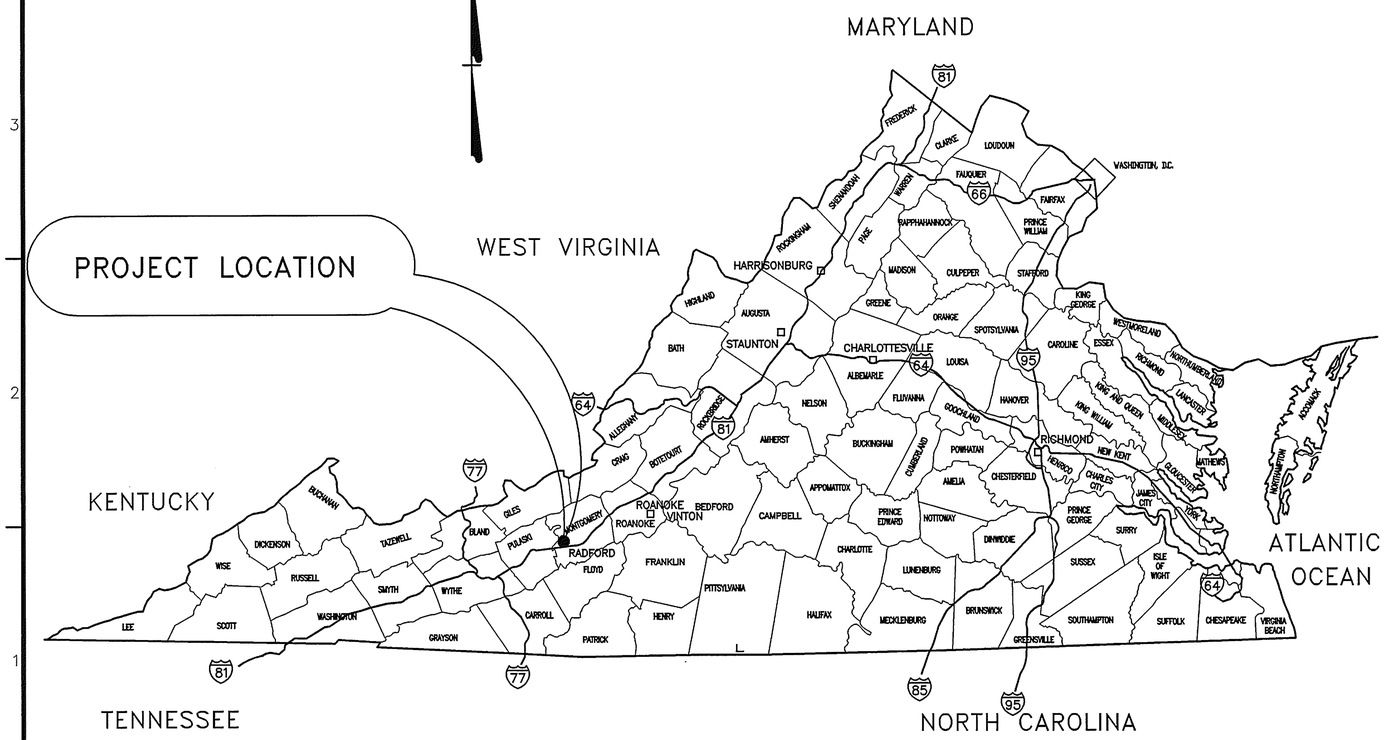



Mattern & Craig, Inc.
CONSULTING ENGINEERS · SURVEYORS
701 FIRST STREET, S.W.
ROANOKE, VIRGINIA 24016
(540) 345-9345
(540) 345-7691 FAX


COMMONWEALTH OF VIRGINIA
2/11/04
STEVEN A. CAMPBELL
No. 015251
PROFESSIONAL ENGINEER

COMMONWEALTH OF VIRGINIA
02/07/04
STEWART W. HUBBELL
No. 07420
PROFESSIONAL ENGINEER

US Army Corps of Engineers
Norfolk District

| REV. | DATE | DESCRIPTION | BY | APP. |
|---|---|---|---|---|

DESIGNED: JMB
DRAWN: ARB
CHECKED: SWH
SUBMITTED:
DATE: 13-FEB-04
SCALE: N/A
PROJECT NO. 5022894B
NORFOLK DISTRICT FILE NO. RAD 274.0001
SPECIFICATION NO.
DRAWING NO. 531-90-05
Plot scale: 1:1
Last revised on:
File name:

NORFOLK DISTRICT
CORPS OF ENGINEERS
NORFOLK, VIRGINIA

FINAL
SUBMITTAL

SETTLING BASIN
RADFORD ARMY AMMUNTION PLANT
RADFORD, VIRGINIA

COVER SHEET

T-1
SHEET 1 OF 4

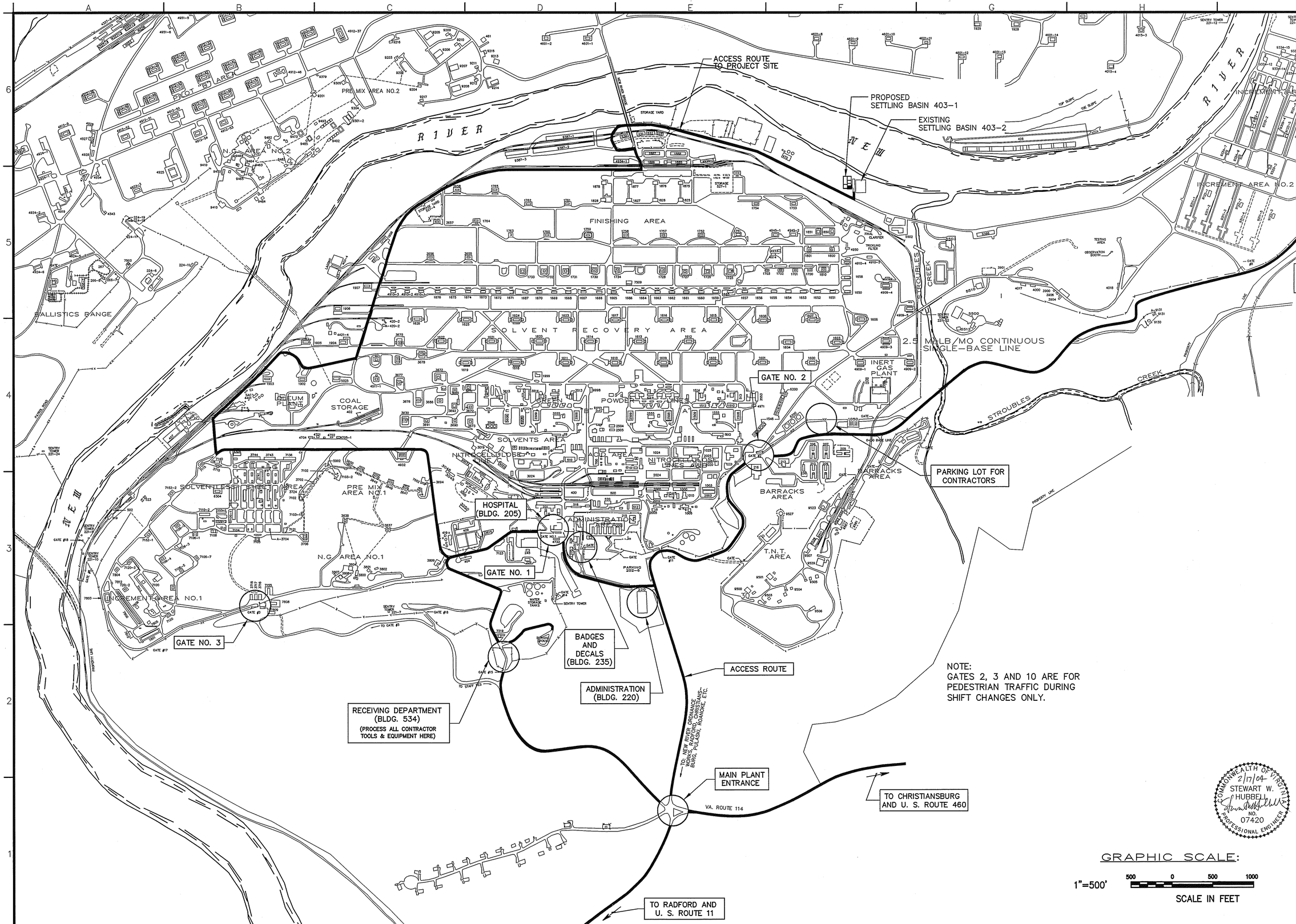


US Army Corps of Engineers
Norfolk District

| REV. | DATE | DESCRIPTION | BY | APP. |
|---|---|---|---|---|

DESIGNED: JMB
DRAWN: ARB
CHECKED: SWH
SUBMITTED:
DATE: 13-FEB-04
SCALE:
PROJECT NO. 5022894B
NORFOLK DISTRICT FILE NO. RAD 274.0002
DRAWING NO. 831-90-05
SPECIFICATION NO.
Last worked on:
Plot scale: 1:1
File name:

NORFOLK DISTRICT
CORPS OF ENGINEERS
NORFOLK, VIRGINIA

FINAL
SUBMITTAL

SETTLING BASIN
RADFORD ARMY AMMUNITION PLANT
RADFORD, VIRGINIA

JOB SITE AND ORIENTATION MAP

T-2
SHEET 2 OF 4

R:\dwgs\2006\Revisions\(11-1-03)T-2.dwg, 02/16/04 07:05:15 PM, KIP 2950.pc3

| | |
|---|---|
| AB | ANCHOR BOLT |
| ABAN | ABANDON OR ABANDONED |
| ABUT | ABUTMENT |
| ABV | ABOVE |
| ACT | ACOUSTICAL |
| ADD | ADDITIONAL |
| ADJ | ADJACENT |
| AFF | ABOVE FINISH FLOOR |
| AGGR | AGGREGATE |
| ALUM | ALUMINUM |
| ALT | ALTERNATE |
| ANC | ANCHOR |
| APPROX | APPROXIMATE |
| ARCH | ARCHITECTURAL |
| AWWA | AMERICAN WATER WORKS ASSOCIATION |
| AVG | AVERAGE |
| BIT | BITUMINOUS |
| BJ | BELL JOINT |
| BL | BASE LINE |
| BEG | BEGIN OR BEGINNING |
| BLDG | BUILDING |
| BLKG | BLOCKING |
| BM | BENCH MARK, BEAM |
| BOTT | BOTTOM |
| BP | BYPASS |
| BRG | BEARING |
| BSMT | BASEMENT |
| BV | BUTTERFLY VALVE |
| C | CHANNEL, COLD |
| C/C, C TO C | CENTER TO CENTER |
| CAB | CABINET |
| CAP | CAPACITY |
| CF | CUBIC FEET |
| CG | CHANGE OF GRADE |
| C & G, CC&G | CURB AND GUTTER , CONCRETE |
| CI | CAST IRON |
| CIRC | CIRCULAR |
| CKT | CIRCUIT |
| CL | CENTER LINE |
| CLR | CLEAR |
| CONST | CONSTRUCTION |
| COR | CORNER |
| CMP | CORRUGATED METAL PIPE |
| CMU | CONCRETE MASONRY UNITS |
| CND | CONDUIT |
| CO | CLEAN OUT |
| COMB | COMBINATION |
| CONC | CONCRETE |
| CONN | CONNECT, CONNECTION |
| CONT | CONTINUOUS, CONTROL |
| CONTR | CONTRACTOR |
| CP | COORDINATE POINT |
| CR STONE | CRUSHED STONE |
| CSW | CONCRETE SIDEWALK |
| CTR | CENTER |
| CULV | CULVERT |
| CY | CUBIC YARD |
| D | DEPTH OR DEGREE OF CURVE |
| DEPT | DEPARTMENT |
| DF | DRINKING FOUNTAIN |
| DI | DROP INLET, DUCTILE IRON |
| DIA | DIAMETER |
| DIM | DIMENSION |
| DISC | DISCONNECT |
| DMH | DROP MANHOLE |
| DN | DOWN |
| DR | DRIVE |
| DS | DOWN SPOUT |
| DTL | DETAIL |
| DW,D/W | DRIVEWAY |
| DWL | DWELLING |
| DWG | DRAWING |
| E | EAST |
| EA | EACH |
| E.B.L. | EASTBOUND LANE |
| EF | EACH FACE |
| EJ | EXPANSION JOINT |
| EL, ELEV | ELEVATION |
| ELEC | ELECTRICAL |
| ENGR | ENGINEER |
| ENTR | ENTRANCE |
| EOL | END OF LINE |
| EP | EDGE OF PAVEMENT |
| EQ | EQUAL |
| EQPT | EQUIPMENT |
| EW | EACH WAY, ENDWALL |
| EXIST | EXISTING |

| | |
|---|---|
| EXP | EXPANSION |
| EXT | EXTERIOR |
| FR | FRAME |
| FD | FLOOR DRAIN |
| FDN | FOUNDATION |
| FES | FLARED END SECTION |
| FF | FINISH FLOOR |
| FFE | FINISHED FLOOR ELEVATION |
| FH | FIRE HYDRANT |
| FIG | FIGURE |
| FIN | FINISH |
| FIXT | FIXTURE |
| FL | FLOOR |
| FLEX | FLEXIBLE |
| FLG | FLANGE |
| FT | FOOT |
| FTG | FOOTING |
| FUT | FUTURE |
| GAL | GALLON |
| GALV | GALVANIZED |
| GAR | GARAGE |
| GND | GROUND |
| GR | GRAVEL |
| GOVT | GOVERNMENT |
| GPM | GALLONS PER MINUTE |
| GRTG | GRATING |
| GV | GAS VALVE |
| GW | GRAY WATER |
| H | HOT |
| HB | HOSE BIBB |
| HK | HOOK |
| HM | HOLLOW METAL |
| HOR, HORIZ | HORIZONTAL |
| HP | HORSE POWER |
| HPT | HIGH POINT |
| HYD | HYDRANT |
| ID | INSIDE DIAMETER |
| IN | INCH |
| INSUL | INSULATION |
| INV | INVERT |
| IP | IRON PIN |
| JT | JOINT |
| JB | JUNCTION BOX |
| L | LENGTH, LONG |
| LF | LINEAL FOOT |
| LFM | LEACHATE FORCE MAIN |
| LG | LONG |
| LP | LIGHT POLE |
| LS | LEACHATE SEWER |
| LT | LEFT |
| LTG | LIGHTING |
| MACH | MACHINERY |
| MAS | MASONRY |
| MATL | MATERIAL |
| MAX | MAXIMUM |
| MB | MAILBOX |
| MECH | MECHANICAL |
| MFR | MANUFACTURER |
| MH | MANHOLE, MOUNTING HEIGHT |
| MIN | MINIMUM |
| MISC | MISCELLANEOUS |
| MJ | MECHANICAL JOINT |
| MO | MASONRY OPENING |
| MON | MONUMENT |
| MTD | MOUNTED |
| MTG | MOUNTING |
| MTL | METAL |
| MV | MUD VALVE |
| N & C | NAIL AND CAP |
| NIC | NOT IN CONTRACT |
| NO | NUMBER |
| NTS | NOT TO SCALE |
| OC | ON CENTERS |
| OD | OUTSIDE DIAMETER |
| OPER | OPERATOR |
| OPNG | OPENING |
| OPP | OPPOSITE |
| PB | PAPER BOX |
| PC | POINT OF CURVE |
| PCC | POINT OF COMPOUND |
| PER | PERIMETER |
| PERF | PERFORATED |
| PERP | PERPENDICULAR |
| PI | POINT OF INTERSECTION |
| PIV | POST INDICATOR VALVE |
| PL | PLATE, PROPERTY LINE |
| PLYWD | PLYWOOD |
| POL | POINT ON LINE |

| | |
|---|---|
| PP | POWER POLE |
| POT | POINT ON TANGENT |
| PRC | POINT OF REVERSE CURVE |
| PSI | POUNDS PER SQUARE INCH |
| PT | POINT OF TANGENT |
| PVC | POLYVINYL CHLORIDE |
| PVI | POINT OF VERTICAL INTERSECTION |
| PVMT | PAVEMENT |
| PVT | PRIVATE |
| R | RADIUS, RISER |
| RAS | RETURN ACTIVATED SLUDGE |
| RR | RAIL ROAD |
| RCP | REINFORCED CONCRETE PIPE |
| RD | ROOF DRAIN, ROAD |
| RDCR | REDUCER |
| RECPT | RECEPTACLE |
| RECT | RECTANGULAR |
| REINF | REINFORCE, REINFORCEMENT |
| REF | REFERENCE |
| REL | RELOCATED |
| REQD | REQUIRED |
| REV | REVISION |
| RTE | ROUTE |
| RT | RIGHT |
| R/W | RIGHT OF WAY |
| S | SANITARY SEWER, SOUTH, SWITCH |
| SAN | SANITARY |
| SCH | SCHEDULE |
| SD | STORM DRAIN |
| SECT | SECTION |
| SER | SERVICE |
| SH | SHEET |
| SHTG | SHEETING |
| SIM | SIMILAR |
| SPEC | SPECIFICATION |
| SP | SIGNAL POLE |
| SQ | SQUARE |
| SS | STAINLESS STEEL |
| ST | STREET |
| STA | STATION |
| STD | STANDARD |
| STL | STEEL |
| STRUCT | STRUCTURAL |
| STY | STORY |
| SUR | SURVEY |
| SURF | SURFACE |
| S/W | SIDEWALK |
| SYMM | SYMMETRICAL |
| T | TREAD, TOP |
| T & B | TOP AND BOTTOM |
| TC | TERRA COTTA |
| TDC | TURNED DOWN CURB |
| TELE | TELEPHONE |
| TEMP | TEMPORARY |
| THK | THICK |
| TP | TELEPHONE POLE |
| TRTD | TREATED |
| TS | TOP OF SLAB |
| TV | TELEVISION |
| TW | TOP OF WALL |
| TYP | TYPICAL |
| UC | UNDERGROUND COMMUNICATIONS DUCTBANK |
| UG | UNDERGROUND |
| UON | UNLESS OTHERWISE NOTED |
| U.S.C.&G.S. | UNITED STATES COAST AND GEODETIC SURVEY |
| USGS | UNITED STATES GEOLOGICAL SURVEY |
| V, VAL | VALVE |
| VAP BAR | VAPOR BARRIER |
| VC | VERTICAL CURVE |
| VERT | VERTICAL |
| VOL | VOLUME |
| VDOT | VIRGINIA DEPARTMENT OF TRANSPORTATION |
| V.S.D. | VERTICAL SIGHT DISTANCE |
| W.B.L. | WEST BOUND LANE |
| W | WIDE FLANGE, WIDE |
| W/ | WITH |
| WD | WOOD |
| WL | WATER LINE |
| W/O | WITHOUT |
| WS | WATER SURFACE |
| WT | WATERTIGHT, WEIGHT |
| WVDH | WEST VIRGINIA DEPARTMENT OF HIGHWAYS |
| WWF | WELDED WIRE FABRIC |

## MATERIALS SYMBOLS

- GRAVEL OR STONE
- EARTH
- CONCRETE
- CONCRETE PAVEMENT
- ASPHALT PAVEMENT

## EROSION AND SEDIMENT CONTROL SYMBOLS

- SF — SILT FENCE
- OP — CULVERT OUTLET PROTECTION
- IP — STORM DRAIN INLET PROTECTION
- CE — TEMPORARY GRAVEL CONSTRUCTION ENTRANCE

| EXISTING | NEW | DESCRIPTION |
|---|---|---|
| | | BUILDING WITH PORCH OR STOOP |
| | | FOUNDATION ONLY |
| 35 | 35 | CONTOUR, CONTOUR WITH ELEVATION |
| + 20.0 OR × 1025.00 | + 20.0 OR × 1025 | SPOT ELEVATION |
| | | CONCRETE CURB |
| | | CONCRETE CURB & GUTTER |
| | | CONCRETE WALK OR SLAB |
| | | ASPHALT PAVEMENT |
| | | UNPAVED OR GRAVEL ROAD |
| | | TREE LINE |
| | OR | TREE OR SHRUB |
| | | FENCE |
| | | EDGES OF CREEK, SWALE OR DITCH |
| —R/W— | —R/W— | RIGHT OF WAY |
| | | LIMIT OF CONSTRUCTION |
| | | FIELD SURVEY TRAVERSE POINT |
| | | P.C. OR P.T. |
| | | BENCHMARK |
| —SD— | —SD— | STORM DRAIN AND ENDWALL |
| —SD— | —SD— | STORM DRAIN AND FLARED END SECTION |
| —SS— | —SS— | SANITARY SEWER |
| —UC— | —OC— | UNDERGROUND COMMUNICATIONS |
| —OC— | —UC— | OVERHEAD COMMUNICATIONS |
| —G— | —G— | GAS MAIN OR SERVICE LINE |
| —W— | —W— | WATER MAIN OR SERVICE LINE |
| —OE— | —OE— | OVERHEAD ELECTRICAL LINE |
| —UE— | —UE— | UNDERGROUND ELECTRICAL LINE |
| | | PIPE FITTINGS |
| | | FIRE HYDRANT |
| OR | OR | GATE VALVE |
| WV | | WATER VALVE |
| CO | CO | CLEANOUT |
| | | MANHOLE |
| | | DROP INLET (CURB AND GRATING TYPES) |
| GMo o WM | GM WM | G.M. – GAS METER, W.M. – WATER METER |
| —OT— | —OT— | OVERHEAD TELEPHONE LINE |
| —UT— | —UT— | UNDERGROUND TELEPHONE LINE |
| OR | | UTILITY POLE |
| | | POLE GUY AND ANCHOR |
| | | DEMO OF POLE AND ANCHOR |
| | | DEMO OF OVERHEAD LINE |
| | | DEMO OF TRANSFORMER |
| | | POLE MOUNTED TRANSFORMER |
| | | POLE MOUNTED LIGHT FIXTURE |
| | | PAVED DITCH |
| | | DRIVEWAY CULVERT |
| OR | OR | CULVERT WITH FLARED END SECTION |
| H&T | | HUB AND TACK |
| CP #101 | CP #1103 | COORDINATE POINT |
| | | REMOVE THIS OBJECT OR ITEM |

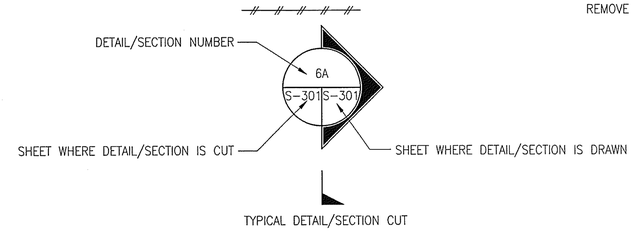


COMMONWEALTH OF VIRGINIA
2/17/04
STEWART W. HUBBELL
NO. 07420
PROFESSIONAL ENGINEER

US Army Corps of Engineers
Norfolk District

| REV. | DATE | DESCRIPTION | BY | APP. |
|---|---|---|---|---|

DESIGNED: JMB
CHECKED: SWH
DATE: 13-FEB-04
DRAWN: ARB
SUBMITTED:
SCALE:
PROJECT NO. 50228948
NORFOLK DISTRICT FILE NO. RAD 274.0003
DRAWING NO. 831-90-05
SPECIFICATION NO.
Last revised on:
File name:
Plot scale: 1:1

NORFOLK DISTRICT
CORPS OF ENGINEERS
NORFOLK, VIRGINIA

FINAL
SUBMITTAL

SETTLING BASIN
RADFORD ARMY AMMUNITION PLANT
RADFORD, VIRGINIA

ABBREVIATIONS AND LEGEND

T-3
SHEET 3 OF 4

R:\dwgs\2006\Revisions\(11-1-03)T-3.dwg, 02/18/04 07:03:12 PM, KIP 2650.pc3

# C-131, C-132

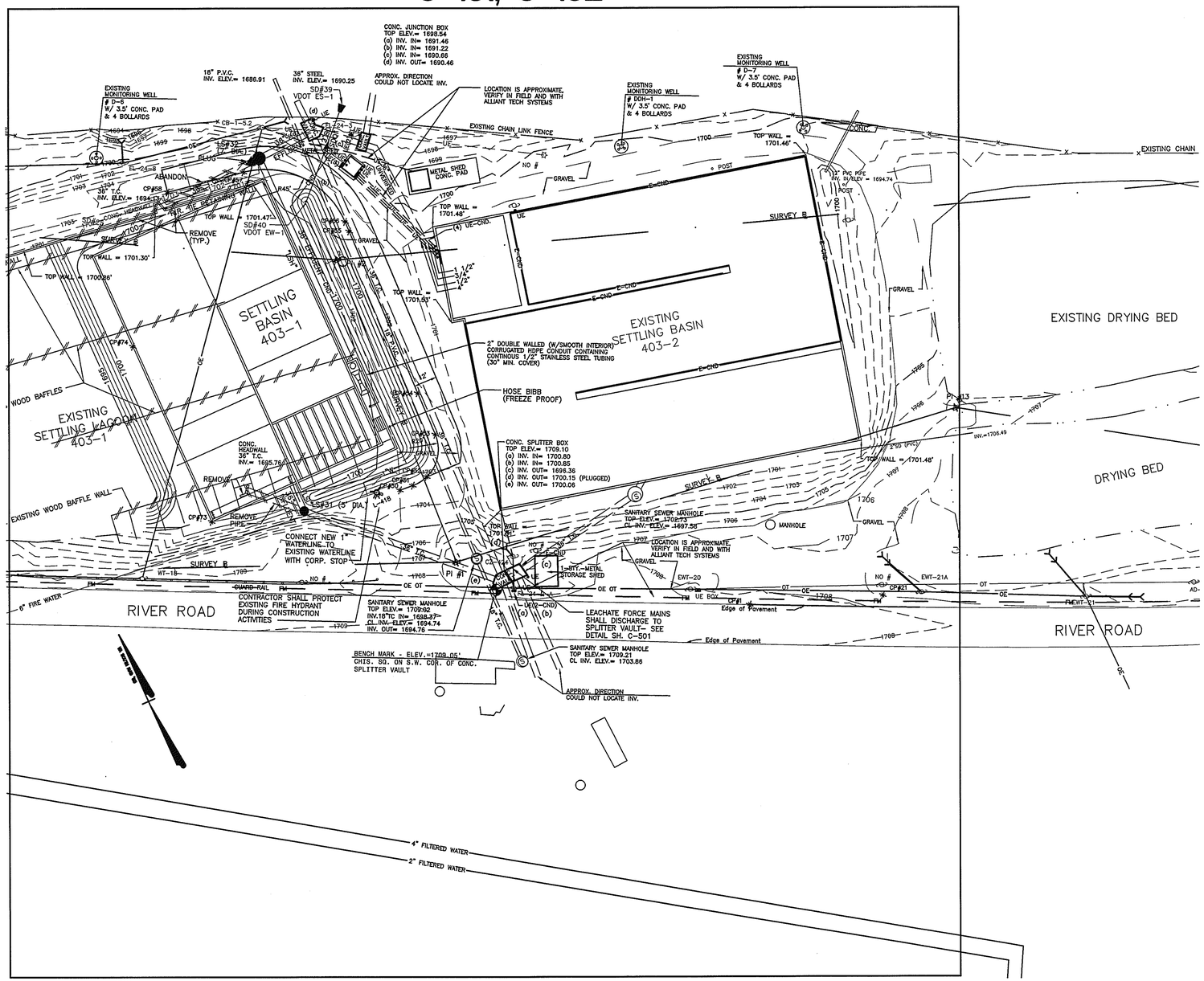


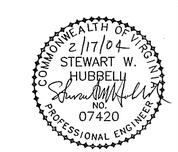


30' 15' 0 30'

SCALE: 1" =30' -0"

US Army Corps of Engineers
Norfolk District

| REV. | DATE | DESCRIPTION | BY | APPR. |
|---|---|---|---|---|

DESIGNED: JMB
DRAWN: ARB
CHECKED: SWH
SUBMITTED:
PROJECT NO. 5022894B
DRAWING NO. 831-90-05
Last worked on:
File name:
DATE: 13-FEB-04
SCALE:
NORFOLK DISTRICT FILE NO. RAD 274.0004
SPECIFICATION NO.
Plot scale: 1:1

NORFOLK DISTRICT
CORPS OF ENGINEERS
NORFOLK, VIRGINIA

FINAL
SUBMITTAL

SETTLING BASIN
RADFORD ARMY AMMUNTION PLANT
RADFORD, VIRGINIA

INDEX PLAN

T-4
SHEET 4 OF 4

R:\dwgs\2006\Revisions\{11-1-03}\T-4.dwg, 02/16/04 07:02:23 PM, KIP 2650.pc3

SURVEY CONTROL COORDINATE LIST

| PI# | Northing | Easting | Desc |
|---|---|---|---|
| 1 | 318541.7095 | 1408242.7452 | I.P. |
| 2 | 318710.7184 | 1408249.9629 | I.P. |

LEACHATE SEWER COORDINATE LIST

| LS# | Northing | Easting | Desc |
|---|---|---|---|
| 31 | 318598.3362 | 1408180.9259 | LSMH |
| 32 | 318775.9370 | 1408234.5609 | LSMH |

COORDINATE POINT LIST

| CP# | Northing | Easting | Desc |
|---|---|---|---|
| 51 | 318587.7522 | 1408230.9660 | COR. GRAVEL |
| 52 | 318587.2039 | 1408238.0757 | PC |
| 53 | 318606.7538 | 1408259.6098 | PT |
| 54 | 318630.2408 | 1408260.0689 | POT |
| 55 | 318721.8831 | 1408261.8601 | POT |
| 56 | 318727.3067 | 1408261.9662 | PC |
| 57 | 318772.6067 | 1408224.1724 | PT |
| 58 | 318779.1472 | 1408183.8077 | POT |
| 73 | 318612.8251 | 1408134.6258 | COR. WALL |
| 74 | 318712.8245 | 1408134.2815 | FACE WALL |

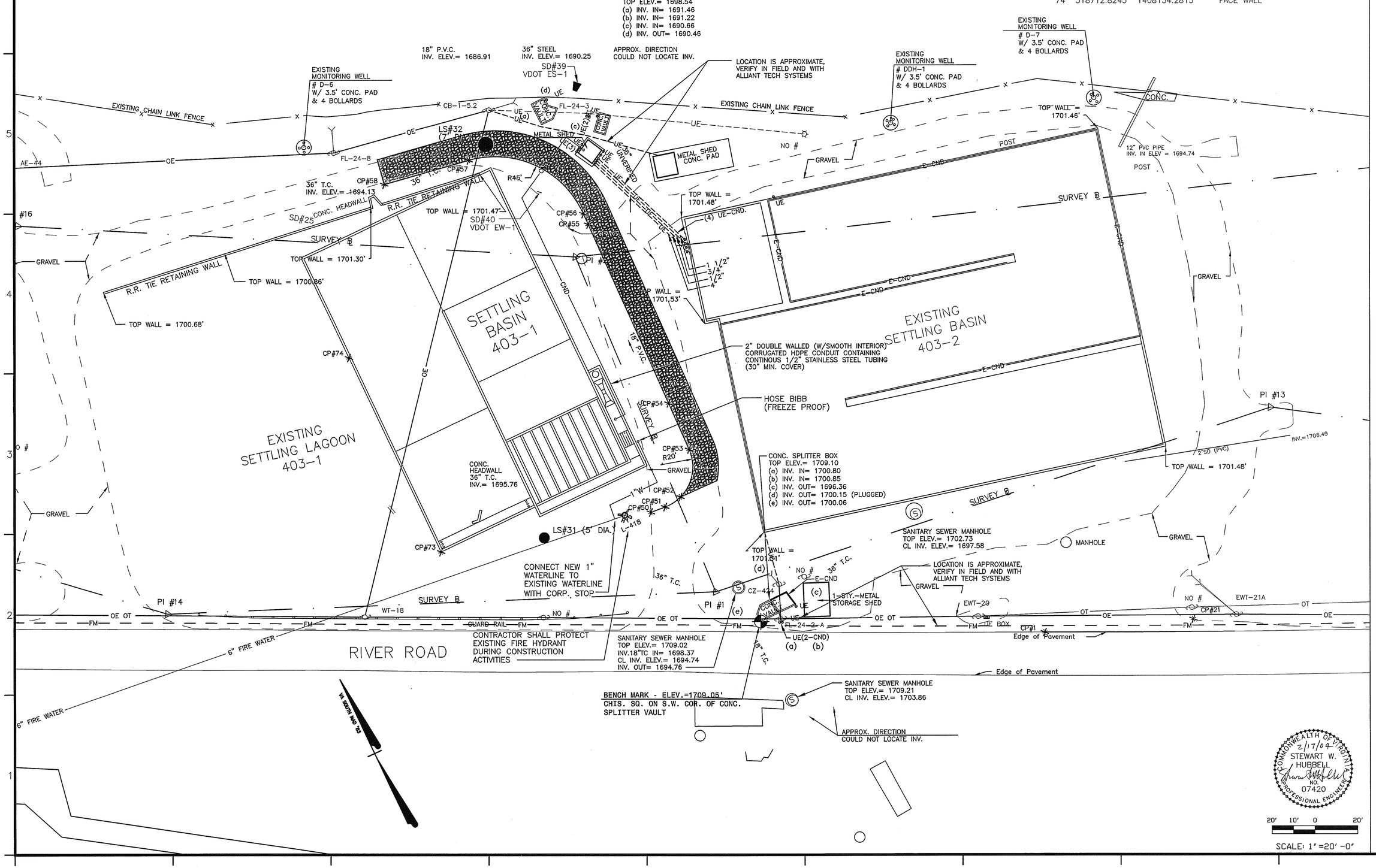


US Army Corps of Engineers
Norfolk District

| REV. | DATE | DESCRIPTION | BY | APP. |
|---|---|---|---|---|

DESIGNED: JMB
DRAWN: ARB
CHECKED: SWH
SUBMITTED:
DATE: 13-FEB-04
SCALE: AS SHOWN
PROJECT NO. 50228948
DRAWING NO. 831-90-05
NORFOLK DISTRICT FILE NO. RAD 274.0005
SPECIFICATION NO.
Last saved on:
File name:
Plot scale: 1:1

NORFOLK DISTRICT
CORPS OF ENGINEERS
NORFOLK, VIRGINIA

FINAL
SUBMITTAL

SETTLING BASIN
RADFORD ARMY AMMUNITION PLANT
RADFORD, VIRGINIA

SETTLING BASIN DIMENSIONAL LAYOUT PLAN

C-131
SHEET 1 OF 5

R:\dwgs\2003\Revisions\11-1-433\C-131.dwg, 02/16/04 07:00:31 PM, KIP 2650.pc3

STORM DRAIN COORDINATE LIST

| SD# | Northing | Easting | Desc |
|---|---|---|---|
| 39 | 318783.8034 | 1408285.5098 | VDOT ES-1 |
| 40 | 318745.2091 | 1408247.7411 | VDOT EW-1 |

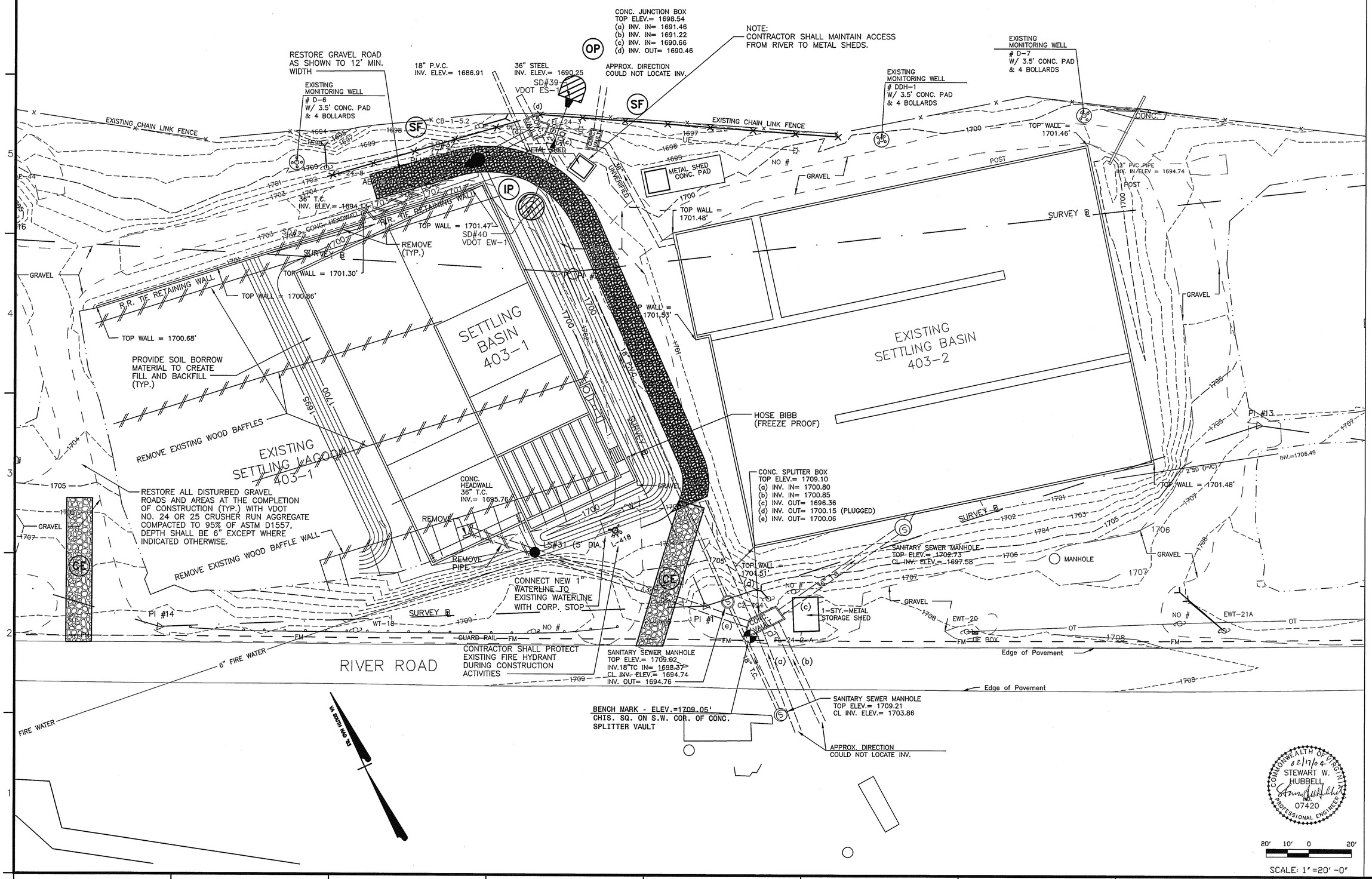


US Army Corps of Engineers Norfolk District

| REV. | DATE | DESCRIPTION | BY | APP'D |
|---|---|---|---|---|

DESIGNED: JMB | CHECKED: SWH | DATE: 13-FEB-04
DRAWN: ARB | SUBMITTED: | SCALE: AS SHOWN
PROJECT NO. 5022894B | NORFOLK DISTRICT FILE NO. RAD 274 .0006
DRAWING NO. 831-90-05 | SPECIFICATION NO.
Last worked on: | Plot scale: 1:1
File name:

NORFOLK DISTRICT
CORPS OF ENGINEERS
NORFOLK, VIRGINIA

FINAL
SUBMITTAL

SETTLING BASIN
RADFORD ARMY AMMUNTION PLANT
RADFORD, VIRGINIA

SETTLING BASIN SITE PLAN

C-132
SHEET 2 OF 5

R:\dwgs\2006\Revisions\11-1-03\C-132.dwg, 02/17/04 04:02:05 PM, KIP 2650.pc3

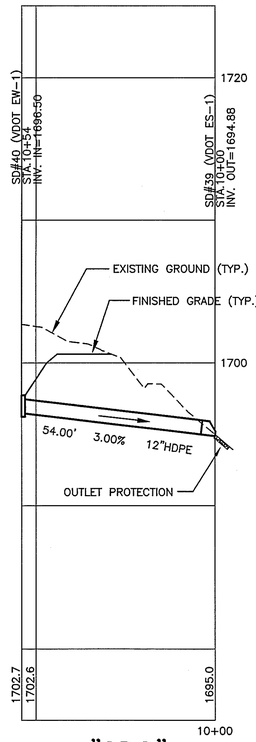


"SDQ"

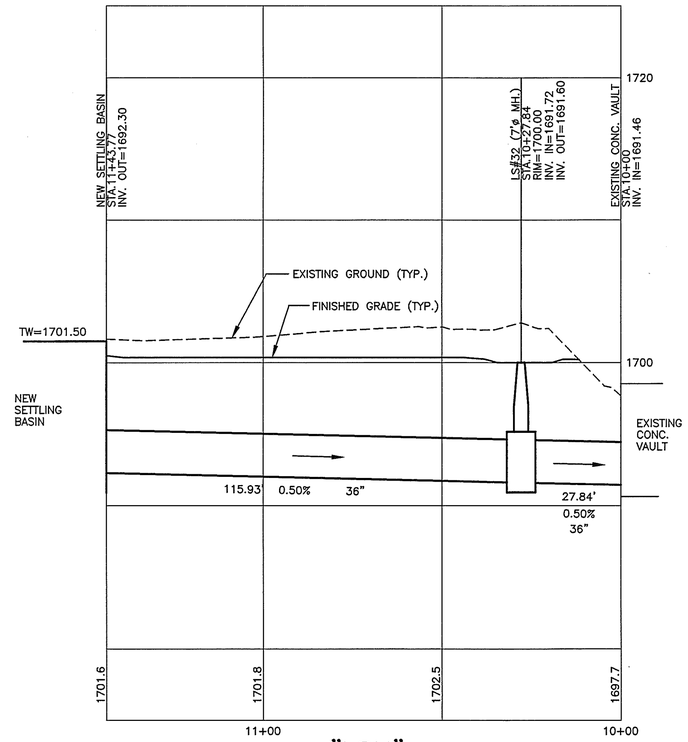


"LSH"

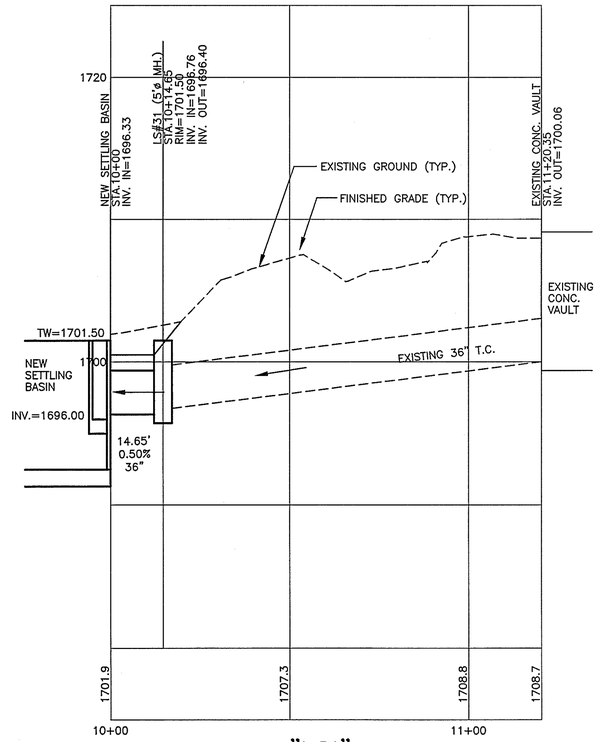


"LSI"

SCALE: H. 1"= 20'
V. 1"= 5'

20' 10' 0 20'
SCALE: 1"=20'-0"

COMMONWEALTH OF VIRGINIA
2/17/04
STEWART W. HUBBELL
NO. 07420
PROFESSIONAL ENGINEER

US Army Corps of Engineers
Norfolk District

| REV. | DATE | DESCRIPTION | BY | APP. |
|---|---|---|---|---|
| | | | | |

DESIGNED: JMB
DRAWN: ARB
CHECKED: SWH
SUBMITTED:
DATE: 13-FEB-04
SCALE: AS SHOWN
PROJECT NO. 502289
NORFOLK DISTRICT FILE NO. 5022894B
SPECIFICATION NO. RAD 274 .0007
DRAWING NO. 831-90-05
Last worked on:
Pick number:
Plot scale: 1:1

NORFOLK DISTRICT
CORPS OF ENGINEERS
NORFOLK, VIRGINIA

FINAL
SUBMITTAL

SETTLING BASIN
RADFORD ARMY AMMUNITION PLANT
RADFORD, VIRGINIA

SETTLING BASIN
STORM DRAIN PROFILES

C-331
SHEET 3 OF 5

R:\dwgs\2008\Revisions\11-1-03\C-331.dwg, 02/16/04 08:45:31 PM, KIP 2650.pc3

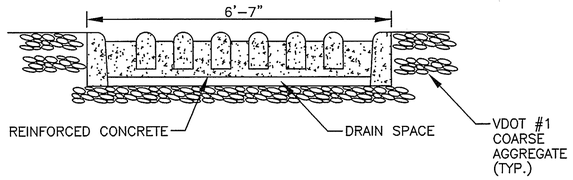


NOTE: IT IS IMPERATIVE THAT THE WASHRACK BE INSET INTO THE GROUND AS SHOWN FOR MAXIMUM USE.

THE AREA OF THE ENTRANCE SHOULD BE CLEARED OF ALL VEGETATION ROOTS AND OTHER OBJECTIONABLE MATERIAL. THE FILTER FABRIC UNDERLINER SHALL BE PLACED FIRST: THE FULL WIDTH AND LENGTH OF THE ENTRANCE (MINIMUM OF 70 FEET). THEN THE GRAVEL SHALL BE CAREFULLY PLACED IN A SIX INCH LAYER (VDOT #1 COARSE AGGREGATE: 2–3 INCH STONE).

IF CONDITIONS ON THE SITE ARE SUCH THAT THE MAJORITY OF THE MUD IS NOT REMOVED BY VEHICLES TRAVELING OVER THE GRAVEL. THEN A WASH RACK SHALL BE INSTALLED TO WASH THE TIRES OF THE VEHICLES BEFORE ENTERING THE PUBLIC ROAD. WASH WATER MUST BE DIVERTED AWAY FROM THE ENTRANCE TO A SEDIMENT TRAPPING MEASURE ONSITE.

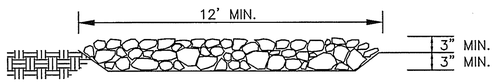


SECTION A–A

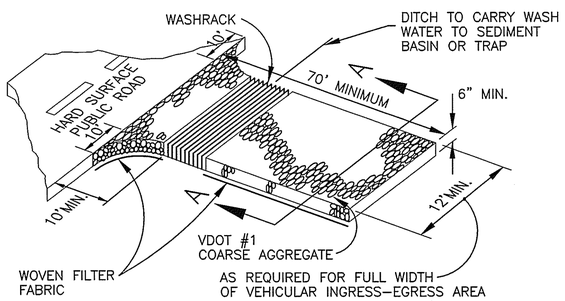


TEMPORARY GRAVEL CONSTRUCTION ENTRANCE

STD. & SPEC. 3.02–1

CE

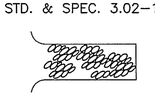

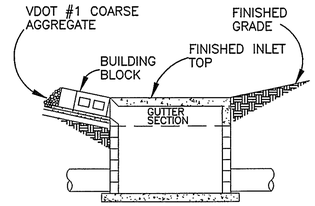


NOTE:
USE A YARD INLET/DROP INLET TRAP PRIOR TO SETTING FINISHED TOP (SEE DETAIL BELOW)

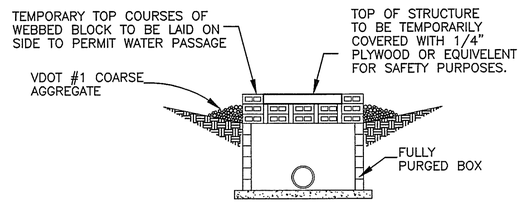


NOTE:
USE THIS TYPE OF TRAP AT CURB INLETS PRIOR TO SETTING THE TOP.

IP

DETAIL SILT TRAP AT YARD INLET

## *PIPE OUTLET CONDITIONS*

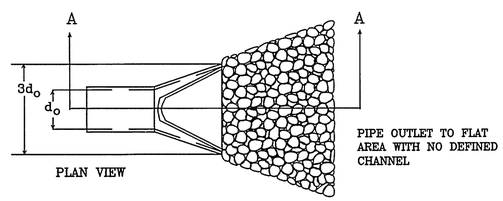


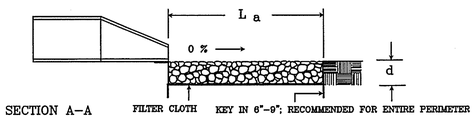


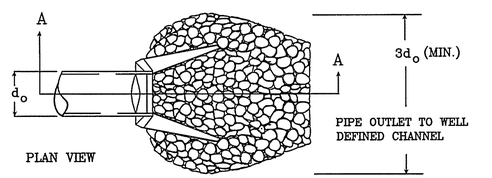


NOTES: 1. APRON LINING MAY BE RIPRAP, GROUTED RIPRAP, GABION BASKET, OR CONCRETE.
2. La IS THE LENGTH OF THE RIPRAP APRON AS CALCULATED USING PLATES 3.18–3 AND 3.18–4.
3. d = 1.5 TIMES THE MAXIMUM STONE DIAMETER, BUT NOT LESS THAN 6 INCHES.

OP

OUTLET PROTECTION

STD. & SPEC. 3.18–1

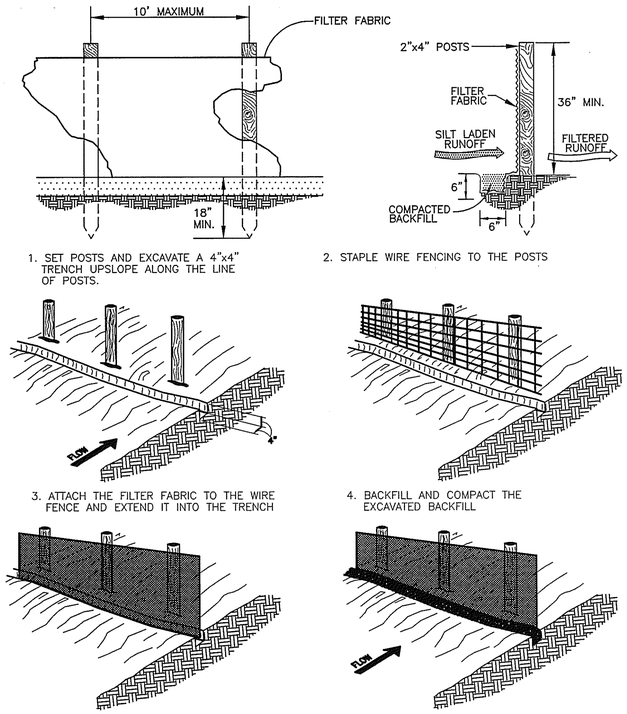


1. SET POSTS AND EXCAVATE A 4"x4" TRENCH UPSLOPE ALONG THE LINE OF POSTS.
2. STAPLE WIRE FENCING TO THE POSTS
3. ATTACH THE FILTER FABRIC TO THE WIRE FENCE AND EXTEND IT INTO THE TRENCH
4. BACKFILL AND COMPACT THE EXCAVATED BACKFILL

EXTENSION OF FABRIC AND WIRE INTO THE TRENCH

SILT FENCE
(WITH WIRE SUPPORT)

SF —X— X—

STD. & SPEC. 3.05–1

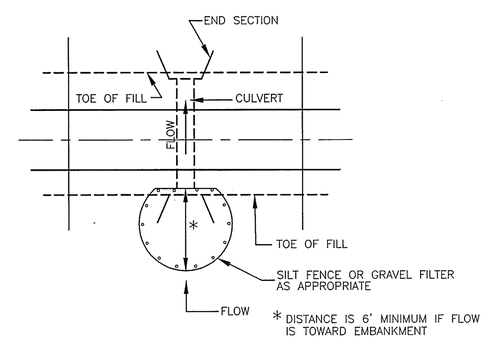


OPTIONAL STONE COMBINATION **

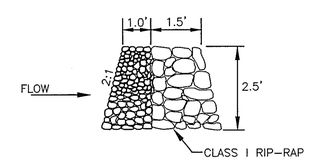


* VDOT #3, #357 OR #5 COARSE AGGREGATE TO REPLACE SILT FENCE IN "HORSESHOE" WHEN VELOCITY OF FLOW IS EXPECTED

CIP

SILT FENCE CULVERT INLET PROTECTION

STD. & SPEC. 3.08–1

COMMONWEALTH OF VIRGINIA
02/17/04
STEWART W. HUBBELL
NO. 07420
PROFESSIONAL ENGINEER

US Army Corps of Engineers
Norfolk District

| REV. | DATE | DESCRIPTION | BY | APP. |
|---|---|---|---|---|

DESIGNED: HAY
DRAWN: HAY
CHECKED: JMB
SUBMITTED:
PROJECT NO. 5022894B
DRAWING NO. 831–90–05
Last worked on:
File name:
DATE: 13–FEB–04
SCALE: N/A
NORFOLK DISTRICT FILE NO. RAD 274 .0008
SPECIFICATION NO.
Plot scale: 1:1

NORFOLK DISTRICT
CORPS OF ENGINEERS
NORFOLK, VIRGINIA

FINAL
SUBMITTAL

SETTLING BASIN
RADFORD ARMY AMMUNTION PLANT
RADFORD, VIRGINIA

SETTLING BASIN
EROSION AND SEDIMENT CONTROL DETAILS

C-502
SHEET 4 OF 5

R:\dwgs\2008\Revisions\11-1-03\C-502.dwg, 02/16/04 08:12:52 PM, KIP 2950.pc3

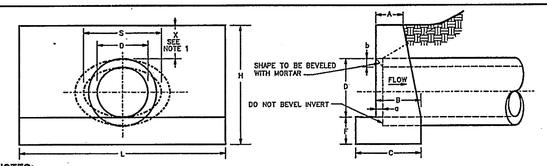


EW-1,1A

**NOTES:**

1. "H" MAY BE REDUCED UNTIL "X" REACHES A MINIMUM OF 4" WHERE ENDWALL WOULD PROTRUDE ABOVE SHOULDER LINE. IN NO CASE SHALL TOP OF ENDWALL PROJECT ABOVE FILL SLOPE, DITCH SLOPE, OR SHOULDER.
2. THIS ITEM MAY BE PRECAST OR CAST IN PLACE.
3. ALL CAST IN PLACE CONCRETE TO BE CLASS A3. FOR PRECAST SEE SHEET 101.02.
4. THIS STANDARD TO BE USED WITH STRAIGHT CROSSINGS AND ALL SKEWS (0° TO 45°).
5. HEADWALL TO BE BEVELED IN ALL AREAS EXCEPT WHERE A CONFLICT WITH INVERT OR WINGWALLS OCCUR.
6. BEVEL EDGE IS REQUIRED ON THE HEADWALL AT THE INLET END OF THE CULVERT (WHERE THE FLOW ENTERS THE CULVERT).
7. HEADWALL AT THE OUTLET END OF THE CULVERT MAY BE EITHER SQUARE EDGE OR BEVEL EDGE.
8. ON SHALLOW FILLS WHERE ENDWALLS ARE 1' OR LESS BELOW SHOULDER LINE, THE TOP OF THE ENDWALL SHALL BE CONSTRUCTED PARALLEL TO THE GRADE OF THE ROAD.
9. ¾" CHAMFER MAY BE PROVIDED ON ALL EDGES AT MANUFACTURER'S OPTION.

EW-1

**ENDWALL FOR CIRCULAR PIPE**

| | DIAMETER OF PIPE CULVERT | | | | | |
|---|---|---|---|---|---|---|
| | 12" | 15" | 18" | 21" OR 24" | 27" OR 30" | 33" OR 36" |
| A | 0'-6" | 0'-8" | 0'-9" | 0'-11" | 1'-0" | 1'-0" |
| B | 0'-11" | 1'-1" | 1'-3" | 1'-5" | 1'-9" | 2'-0" |
| C | 1'-4" | 1'-7" | 1'-9" | 2'-2" | 2'-6" | 2'-9" |
| D | 1'-0" | 1'-3" | 1'-6" | 2'-0" | 2'-3" | 3'-0" |
| F | 0'-6" | 0'-8" | 0'-8" | 0'-9" | 0'-9" | 0'-9" |
| H | 2'-3" | 2'-11" | 3'-2" | 3'-9" | 4'-3" | 4'-9" |
| L | 4'-0" | 5'-0" | 6'-0" | 8'-0" | 10'-0" | 12'-0" |
| a | 0'-1½" | 0'-1¾" | 0'-2" | 0'-2½" | 0'-3½" | 0'-3¾" |
| b | 0'-1" | 0'-1¼" | 0'-1½" | 0'-2" | 0'-2½" | 0'-3" |
| | CUBIC YARDS OF CONCRETE | | | | | |
| CONC. PIPE | 0.241 | 0.492 | 0.697 | 1.319 | 2.087 | 2.947 |
| C.M. PIPE | 0.257 | 0.521 | 0.739 | 1.398 | 2.198 | 3.145 |

EW-1A

**ENDWALL FOR ELLIPTICAL PIPE**

| | SIZE OF ELLIPTICAL PIPE CULVERT (SPAN x RISE) | | | | | | | |
|---|---|---|---|---|---|---|---|---|
| | 23"x14" | 30"x19" | 34"x22" | 38"x24" | 42"x27" | 45"x29" | 49"x32" | 53"x34" |
| A | 0'-8" | 0'-9" | 0'-10" | 0'-11" | 0'-11" | 1'-0" | 1'-0" | 1'-0" |
| B | 1'-2" | 1'-5" | 1'-6" | 1'-8" | 1'-9" | 1'-10" | 1'-11" | 1'-11" |
| C | 1'-8" | 1'-11" | 2'-1" | 2'-4" | 2'-5" | 2'-7" | 2'-8" | 2'-9" |
| D | 1'-2" | 1'-7" | 1'-10" | 2'-0" | 2'-3" | 2'-5" | 2'-8" | 2'-10" |
| F | 0'-8" | 0'-8" | 0'-9" | 0'-9" | 0'-9" | 0'-9" | 0'-9" | 0'-9" |
| H | 2'-10" | 3'-3" | 3'-7" | 3'-9" | 4'-0" | 4'-2" | 4'-5" | 4'-7" |
| L | 5'-5" | 7'-2" | 8'-6" | 9'-2" | 10'-2" | 10'-11" | 12'-1" | 12'-11" |
| S | 1'-11" | 2'-6" | 2'-10" | 3'-2" | 3'-6" | 3'-9" | 4'-1" | 4'-5" |
| a | 0'-3½" | 0'-3¼" | 0'-3½" | 0'-4" | 0'-4½" | 0'-4¾" | 0'-5" | 0'-5½" |
| b | 0'-2" | 0'-2½" | 0'-2¾" | 0'-3" | 0'-3½" | 0'-3¾" | 0'-4" | 0'-4½" |
| | CUBIC YARDS OF CONCRETE | | | | | | | |
| CONC.PIPE | 0.502 | 0.855 | 1.238 | 1.500 | 1.811 | 2.101 | 2.512 | 2.801 |

| SPECIFICATION REFERENCE | STANDARD ENDWALL FOR PIPE CULVERTS<br>12"-36" CIRCULAR AND 23"x14"-53"x34" ELLIPTICAL PIPES<br>VIRGINIA DEPARTMENT OF TRANSPORTATION | 101.01 |
|---|---|---|
| 105<br>302 | | |

NOTE: SEE STD. DETAIL MC-SS-22 FOR MH DEEPER THAN 10'

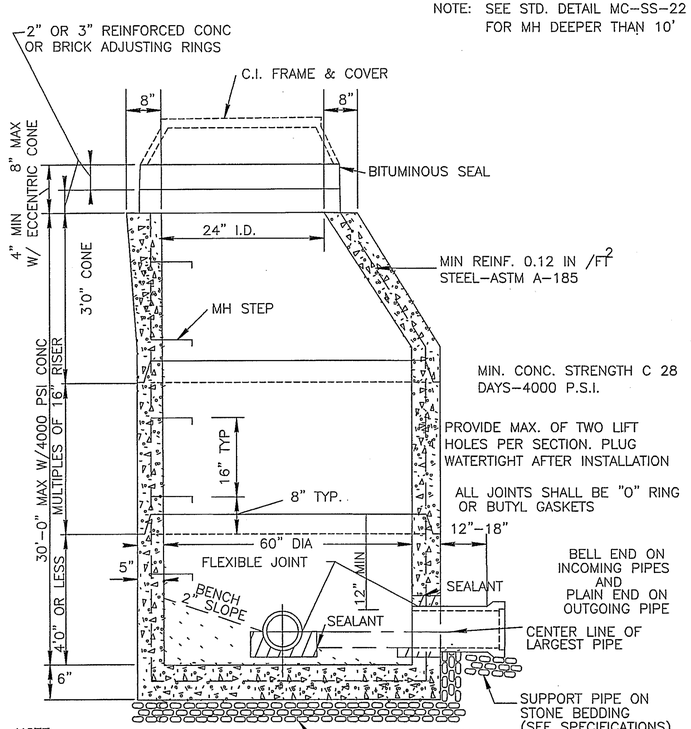


NOTE:
BENCH MAY BE CONC. OR BRICK AND MORTAR.

MANHOLE CONSTRUCTION SHALL CONFORM TO ASTM SPEC. C-478

WHERE STUBS OR KNOCKOUTS ARE PROVIDED FOR FUTURE CONNECTIONS BENCH SHALL BE SO FORMED

LS#31 AND LS#32
PRECAST CONCRETE MANHOLE
5 FOOT DIAMETER-STANDARD

NTS

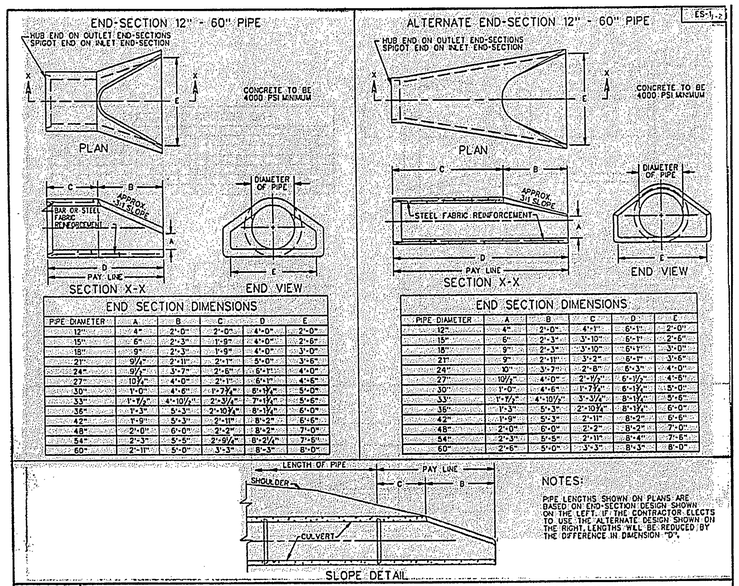


ES-1 (1-2)

END SECTION DIMENSIONS

| PIPE DIAMETER | A | B | C | D | E |
|---|---|---|---|---|---|
| 12" | 4" | 2'-0" | 4'-0" | 2'-0" | 2'-0" |
| 15" | 6" | 2'-3" | 4'-0" | 2'-6" | 2'-6" |
| 18" | 9" | 2'-3" | 1'-9" | 4'-0" | 3'-0" |
| 21" | 9¼" | 2'-11" | 2'-1" | 5'-0" | 3'-6" |
| 24" | 9¼" | 3'-7" | 2'-6" | 6'-11" | 4'-0" |
| 27" | 10¼" | 4'-0" | 2'-1" | 6'-1" | 4'-6" |
| 30" | 1'-0" | 4'-6" | 1'-2¾" | 6'-1¾" | 5'-0" |
| 33" | 1'-1¾" | 4'-10¼" | 2'-3¼" | 7'-1¼" | 5'-6" |
| 36" | 1'-3" | 5'-3" | 2'-10¾" | 8'-1¾" | 6'-0" |
| 42" | 1'-9" | 5'-3" | 2'-11" | 8'-2" | 6'-6" |
| 48" | 2'-0" | 6'-0" | 2'-2" | 8'-2" | 7'-0" |
| 54" | 2'-3" | 5'-5" | 2'-9¼" | 8'-2¼" | 7'-6" |
| 60" | 2'-11" | 5'-0" | 3'-3" | 8'-3" | 8'-0" |

END SECTION DIMENSIONS

| PIPE DIAMETER | A | B | C | D | E |
|---|---|---|---|---|---|
| 12" | 4" | 2'-0" | 4'-1" | 6'-11" | 2'-0" |
| 15" | 6" | 2'-3" | 3'-10" | 6'-11" | 2'-6" |
| 18" | 9" | 2'-3" | 3'-10" | 6'-11" | 3'-0" |
| 21" | 9" | 2'-11" | 3'-2" | 6'-7" | 3'-6" |
| 24" | 10" | 3'-7" | 2'-8" | 6'-3" | 4'-0" |
| 27" | 10¼" | 4'-0" | 2'-1¼" | 6'-1¼" | 4'-6" |
| 30" | 1'-0" | 4'-6" | 1'-7¾" | 6'-1¾" | 5'-0" |
| 33" | 1'-1¾" | 4'-10¼" | 1'-3¼" | 8'-1¼" | 5'-6" |
| 36" | 1'-3" | 5'-3" | 2'-10¾" | 8'-1¾" | 6'-0" |
| 42" | 1'-9" | 5'-3" | 2'-11" | 8'-2" | 6'-6" |
| 48" | 2'-0" | 6'-0" | 2'-2" | 8'-2" | 7'-0" |
| 54" | 2'-3" | 5'-5" | 2'-11" | 8'-4" | 7'-6" |
| 60" | 2'-6" | 5'-0" | 3'-3" | 8'-3" | 8'-0" |

NOTES:
PIPE LENGTHS SHOWN ON PLANS ARE BASED ON END-SECTION DESIGN SHOWN ON THE LEFT. IF THE CONTRACTOR ELECTS TO USE THE ALTERNATE DESIGN SHOWN ON THE RIGHT, LENGTHS WILL BE REDUCED BY THE DIFFERENCE IN DIMENSION "X".

| SPECIFICATION REFERENCE | FLARED END-SECTION FOR 12"-60" CONCRETE PIPE CULVERTS<br>VIRGINIA DEPARTMENT OF TRANSPORTATION | REV. 7/01<br>102.01 |
|---|---|---|
| 302 | | |

COMMONWEALTH OF VIRGINIA
02/17/04
STEWART W. HUBBELL
NO. 07420
PROFESSIONAL ENGINEER

US Army Corps of Engineers
Norfolk District

| REV. | DATE | DESCRIPTION | BY | APP. |
|---|---|---|---|---|

DESIGNED: HAY
DRAWN: HAY
CHECKED: JMB
SUBMITTED: JMB
DATE: 13-FEB-04
SCALE: N/A
PROJECT NO. 5022894B
NORFOLK DISTRICT FILE NO. RAD 274 .0009
SPECIFICATION NO.
DRAWING NO. 831-90-05
Plot scale: 1:1
Last worked on:
File name:

NORFOLK DISTRICT
CORPS OF ENGINEERS
NORFOLK, VIRGINIA

FINAL
SUBMITTAL

SETTLING BASIN
RADFORD ARMY AMMUNTION PLANT
RADFORD, VIRGINIA

SETTLING BASIN
DRAINAGE DETAILS

C-503
SHEET 5 OF 5

R:\dwgs\02088\Revisions\(11-1-03)\C-503.dwg, 02/16/04 08:20:53 PM, KIP 2895.pc3

STRUCTURAL GENERAL NOTES:

1. MATERIAL DESIGN STRENGTHS:
   CAST IN PLACE CONCRETE:
   ALL CONCRETE (NORMAL WEIGHT). . . . . .F'C = 4,000 PSI
   REINFORCING STEEL. DEFORMED (ASTM A615, GR. 60) . . . FY = 60,000 PSI
   STRUCTURAL STEEL (ASTM A 36) . . . . . .FY = 36,000 PSI
   SOIL BEARING CAPACITY . . . . . 1,500 PSF

2. DESIGN CODES

ACI 318–95 "BUILDING CODE REQUIREMENTS FOR REINFORCED CONCRETE."
ASCE 7–95 "MINIMUM DESIGN LOADS FOR BUILDINGS AND OTHER STRUCTURES."
ACI 350R–89 (LATEST EDITION) "ENVIRONMENTAL ENGINEERING CONCRETE STRUCTURES."
AISC "LOAD AND RESISTANCE FACTOR DESIGN SPECIFICATION FOR STRUCTURAL STEEL BUILDINGS," DEC. 1993.

3. DESIGN LOADS:
   WALKWAYS:
   LIVE LOAD. . . . . .100 PSF

   LATERAL LOADS:
   EARTH LOAD, EQUIVALENT FLUID PRESSURE . . . . . .90 PCF/FT
   WASTEWATER . . . . . .65 PCF/FT

4. SEE CIVIL, ELECTRICAL AND/OR EQUIPMENT MANUFACTURER'S DRAWINGS FOR SIZES AND/OR LOCATION OF ANCHOR BOLTS, SLEEVES, OPENINGS, OR EMBEDMENTS IN CONCRETE OR GRATING, EQUIPMENT PADS, SUPPORT FRAMES, OR ATTACHMENTS TO STRUCTURAL STEEL. CONTRACTOR SHALL COORDINATE AND VERIFY SIZE AND LOCATION OF ALL ANCHOR BOLTS, SLEEVES, OPENINGS, ETC. TO SUIT EQUIPMENT PROVIDED. THE DIMENSIONS OF ALL STRUCTURAL SUPPORTS SHALL BE VERIFIED BY THE CONTRACTOR FOR EQUIPMENT PROVIDED. BOLT EQUIPMENT TO SUPPORTS PER MANUFACTURER'S RECOMMENDATIONS. PROVIDE ANCHOR BOLTS AS REQUIRED TO SUIT THE EQUIPMENT PROVIDED.

5. ALL INFORMATION ON EXISTING CONDITIONS IS OBTAINED FROM BEST AVAILABLE SOURCES. THE ACTUAL AS–BUILT CONSTRUCTION MAY POSSIBLY DIFFER FROM WHAT IS ASSUMED IN THE CONTRACT DOCUMENTS. THE CONTRACTOR SHALL VERIFY ALL EXISTING CONDITIONS NOTED ON THE CONTRACT DOCUMENTS, AND SHALL NOTIFY THE CONTRACTING OFFICER IN WRITING OF ANY DISCREPANCIES BETWEEN THE EXISTING CONDITIONS AND THE CONTRACT DOCUMENTS.

6. THE CONTRACTOR SHALL REQUEST IN WRITING AND HIGHLIGHT ON THE SHOP DRAWINGS ANY PROPOSED CHANGES IN THE MATERIALS, DETAILS, ETC. INDICATED ON THE DRAWINGS OR SPECIFICATIONS. ANY CHANGES MUST BE APPROVED BY THE CONTRACTING OFFICER IN WRITING.

7. THE DESIGN, ADEQUACY, AND SAFETY OF ERECTION BRACING, SHORING, TEMPORARY SUPPORTS, ETC. IS THE SOLE RESPONSIBILITY OF THE CONTRACTOR.

8. UNDER SATURATED SOIL CONDITIONS, A MINIMUM OF 5.0 FEET OF WATER MUST BE MAINTAINED IN THE TANK TO RESIST FLOTATION FORCES. GROUND WATER LEVELS MUST BE MAINTAINED BELOW ELEV. 1692.50, AS DETERMINED BY ADJACENT GROUND WATER MONITORING WELLS, IF THE TANK WILL BE DEWATERED FOR CLEANING, MAINTENANCE, ETC.

9. ALL GRATING SHALL BE ALUMINUM.

10. ALL HANDRAIL SHALL BE ALUMINUM.

11. THE CONTRACTOR SHALL MAINTAIN GROUND WATER LEVEL BELOW ELEVATION 1692.50 TO RESIST FLOTATION FORCES.

FOUNDATIONS

1. FOUNDATION DESIGN IS BASED ON A SUBSURFACE INVESTIGATIONS BY FROEHLING & ROBERTSON DATED 1997 COMMISSION NUMBER Y–62447, AND A SUBSURFACE INVESTIGATION BY THE ARMY CORPS OF ENGINEERS DATED MAY 29, 2002.

2. SLAB THICKNESS SHOWN REPRESENTS THE MINIMUM SLAB THICKNESS. IF EXCAVATIONS REVEAL DISTURBED, UNSTABLE, OR UNSUITABLE SOIL, THE CONTRACTING OFFICER SHALL BE NOTIFIED. ALL UNSUITABLE FOUNDATION MATERIAL SHALL BE REMOVED AND THE SLAB SHALL REST ON 12 INCHPOROUS FILL ON PRE–ENGINEERED FILL USING SUITABLE MATERIAL OR COMPACTED #21B BASE COURSE OR BRIDGING MATERIAL IF WET CONDITIONS DICTATE. PLACE AND COMPACT ALL FILL AND SUBRADE MATERIALS IN ACCORDANCE WITH THE SPECIFICATIONS.

CONCRETE

1. ALL REINFORCING SHALL BE DETAILED, FABRICATED, AND PLACED IN ACCORDANCE WITH ACI 315 (LATEST EDITION) UNLESS OTHERWISE NOTED. ALL SPLICES SHALL BE CLASS B TENSION WITH ALL APPLICABLE MODIFICATION FACTORS, UNLESS OTHERWISE NOTED. SPLICES NOT INDICATED MAY BE PROVIDED IF PROPERLY DETAILED ON SHOP DRAWINGS AND APPROVED BY THE ENGINEER. SPLICES OF HORIZONTAL BARS SHALL BE STAGGERED UNLESS OTHERWISE NOTED. EMBEDMENT LENGTHS SHALL BE EQUAL TO TENSION DEVELOPMENT LENGTHS UNLESS OTHERWISE NOTED. STANDARD HOOKS CONFORMING TO ACI 318 SHALL BE USED UNLESS OTHERWISE NOTED. DOWELS IN WALLS AND COLUMNS SHALL MATCH SIZE AND SPACING OF MAIN REINFORCING BARS UNLESS OTHERWISE NOTED. ALL COLUMN TIES SHALL BE CLOSED TYPE (ACI TYPE T1) UNLESS OTHERWISE NOTED. SPREAD REINFORCING AT OPENINGS AND SLEEVES UNLESS OTHERWISE DETAILED. DO NOT CUT REINFORCING BARS. CONCRETE PROTECTION FOR REINFORCEMENT SHALL CONFORM TO ACI 301 (LATEST EDITION) UNLESS OTHERWISE NOTED AND SHALL BE INDICATED ON THE SHOP DRAWINGS. ALL SPLICE LENGTHS AND EMBEDMENT LENGTHS, BENDING DIAGRAMS, AND ASSEMBLY DIAGRAMS SHALL BE INDICATED ON THE SHOP DRAWINGS. PROVIDE 2–#5 CONTINUOUS AT THE TOP OF ALL WALLS. THE CONTRACTOR SHALL KEEP A COPY OF ACI 301 (LATEST EDITION) AND PUBLICATION SP–15 AT THE JOBSITE.

2. MAJOR CONSTRUCTION JOINTS IN SLABS ARE SHOWN. CONSTRUCTION JOINTS IN WALLS, TROUGHS AND WALKWAYS SHALL ALIGN WITH JOINTS IN SLAB. INTERMEDIATE JOINTS IN WALLS AND SLABS ARE NOT SHOWN UNLESS REQUIRED BY THE DESIGN. ALL CONSTRUCTION AND CONTROL JOINTS SHALL BE SHOWN ON THE SHOP DRAWINGS. ALL CONSTRUCTION JOINTS FOR SETTLING BAS SHALL HAVE WATERSTOPS.

3. THE UNIT OF OPERATION OF CONCRETE PLACEMENT FOR CONCRETE WALLS SHALL NOT EXCEED 42 FEET IN ANY DIRECTION UNLESS OTHERWISE NOTED. AT LEAST 72 HOURS SHALL ELAPSE BEFORE CONCRETE IS PLACED ADJACENT TO PREVIOUSLY CAST CONCRETE.

4. BACKFILLING ADJACENT TO WALLS SHALL NOT OCCUR UNTIL WALL CONCRETE HAS REACHED ITS 28–DAY DESIGN COMPRESSIVE STRENGTH AND WATERTIGHTNESS TESTING IS COMPLETE.

5. CHAMFER ALL EXPOSED EDGES OF CONCRETE 3/4 INCH.

6. CONCRETE SHALL BE PLACED IN LAYERS NOT OVER 18 INCHES DEEP AND EACH LAYER SHALL BE COMPACTED BY MECHANICAL INTERNAL–VIBRATING EQUIPMENT SUPPLEMENTED BY HAND SPADING, RODDING AND TAMPING. VIBRATORS SHALL NOT BE INSERTED INTO LOWER COURSES THAT HAVE BEGUN TO SET. CONCRETE SHALL BE PLACED BY CHUTES OR ELEPHANT TRUNKS WHEN THE VERTICAL DROP EXCEEDS 3'–0".T

7. CONTRACTOR SHALL NOTIFY CONTRACTING OFFICER IN WRITING 48 HOURS PRIOR TO PLACING ANY CONCRETE AND/OR CLOSING ANY FORMS WHICH MIGHT INTERFERE WITH INSPECTIONS SO THAT REINFORCEMENT, SLEEVES, PIPES, INSERTS, HANGERS, ETC., CAN BE INSPECTED FOR CONFORMANCE WITH PLANS AND SPECIFICATIONS.

8. EPOXY ANCHORS SHALL BE STAINLESS STEEL (ASTM F593), WITH STAINLESS STEEL NUTS (ASTM F594) AND STAINLESS STEEL WASHERS (ANSI B18.22.1). MINIMUM WORKING (SERVICE) LOADS SHALL BE AS FOLLOWS FOR 4000 PSI CONCRETE:

| DIAMETER (INCHES) | SHEAR (LBS) | TENSION (LBS) |
|---|---|---|
| 1/2 | 1700 | 1375 |
| 5/8 | 2650 | 1650 |
| 3/4 | 3830 | 2535 |

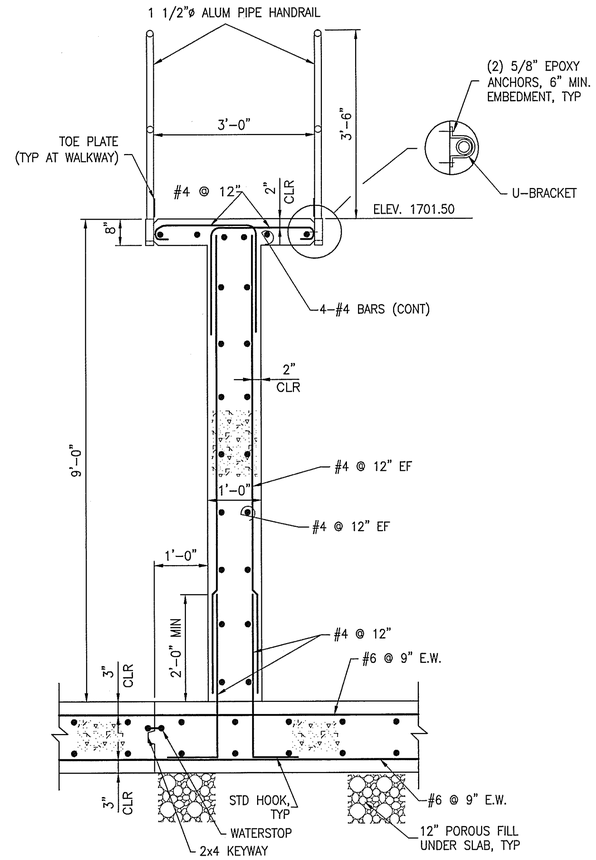


SECTION 2
3/4"=1'–0"
S–101 S–001

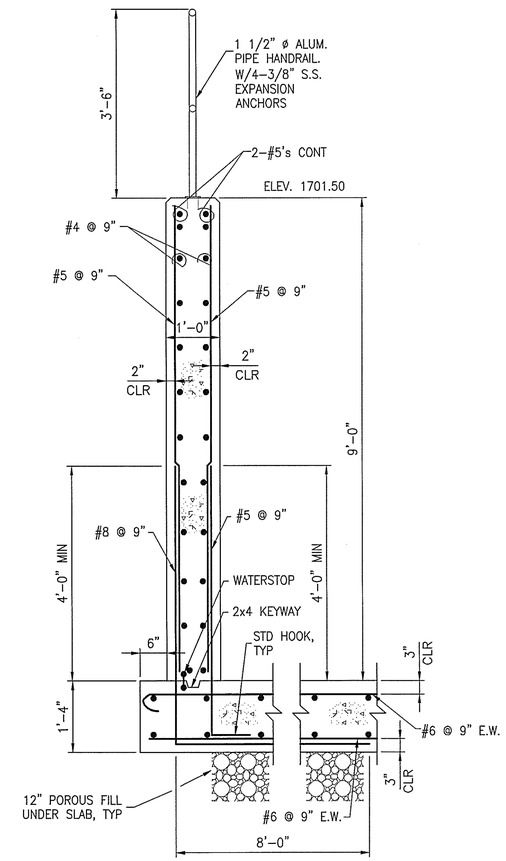


SECTION 1
3/4"=1'–0"
S–101 S–001

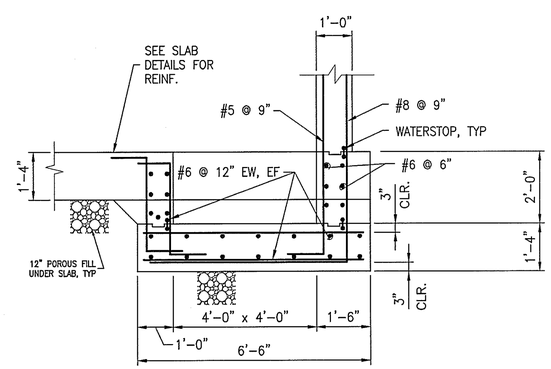


SECTION 3
1/2"=1'–0"
S–101 S–001

2' 1' 0 2'
SCALE: 1/2" = 1'–0"

1' 6" 0 1'
SCALE: 3/4" =1'–0"

COMMONWEALTH OF VIRGINIA
2/17/04
STEVEN A. CAMPBELL
No. 015251
PROFESSIONAL ENGINEER

US Army Corps of Engineers
Norfolk District

| REV. | DATE | DESCRIPTION | BY | APP. |
|---|---|---|---|---|

DESIGNED: CMT
DRAWN: LSM
CHECKED: SAC
SUBMITTED:
DATE: 13–FEB–04
SCALE: AS SHOWN
PROJECT NO. 5022894B
NORFOLK DISTRICT FILE NO. RAD 274 .0010
DRAWING NO. 831–90–05
SPECIFICATION NO.
Last revised on:
File name:
Plot scale: 1:1

NORFOLK DISTRICT
CORPS OF ENGINEERS
NORFOLK, VIRGINIA

FINAL
SUBMITTAL

SETTLING BASIN
RADFORD ARMY AMMUNITION PLANT
RADFORD, VIRGINIA

GENERAL NOTES AND
SETTLING BASIN SECTIONS

S–001
SHEET 1 OF 7

COORDINATE POINT LIST

| CP# | Northing | Easting | Desc |
|---|---|---|---|
| 73 | 318612.8251 | 1408134.6258 | COR. WALL |
| 74 | 318712.8245 | 1408134.2815 | FACE WALL |

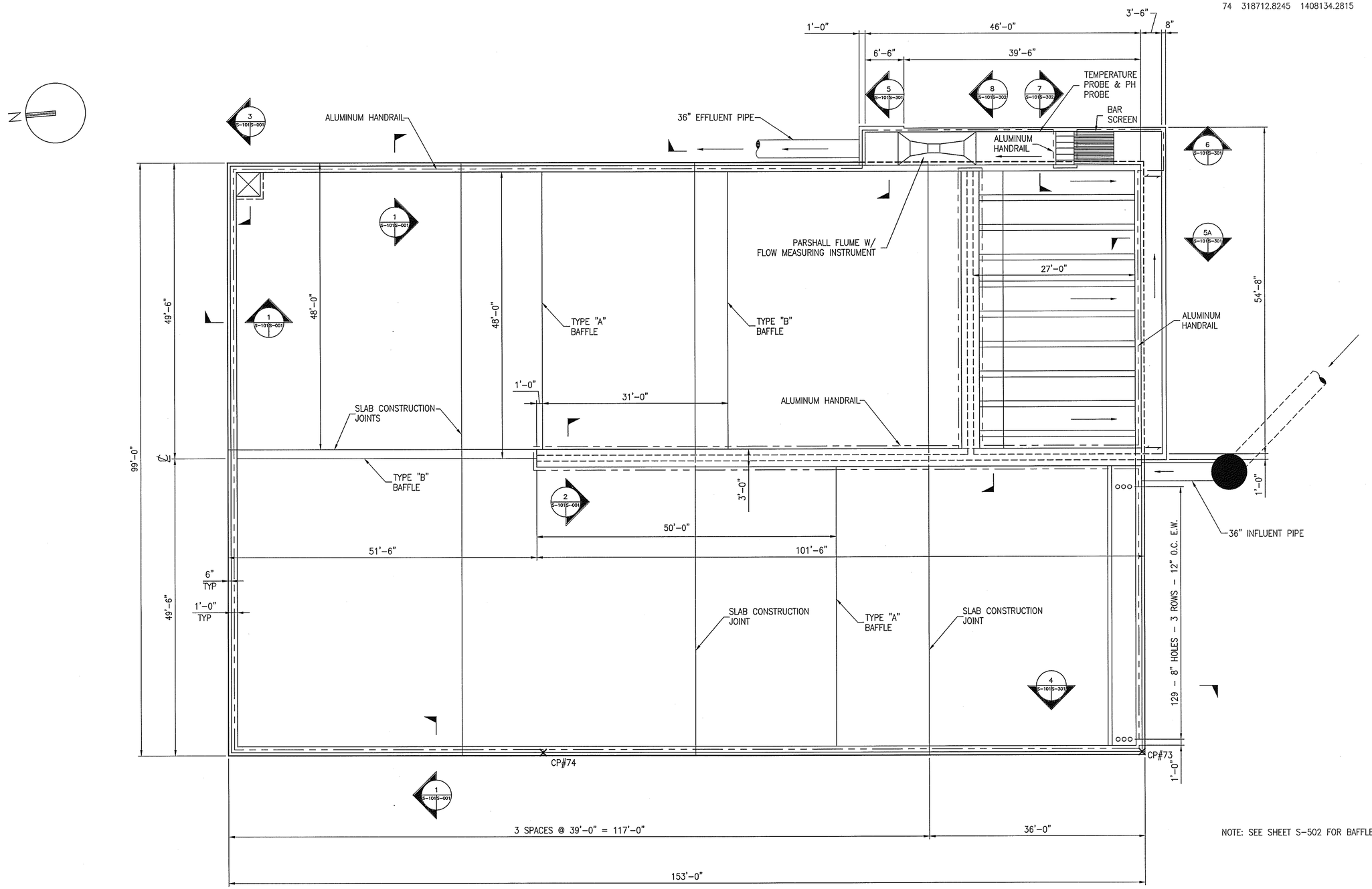


## PLAN

SCALE: 1/8"=1'-0"

NOTE: SEE SHEET S-502 FOR BAFFLE DETAILS.

8' 4' 0 8'

SCALE: 1/8"=1'-0"

COMMONWEALTH OF VIRGINIA
2/17/04
STEVEN A. CAMPBELL
NO. 015251
PROFESSIONAL ENGINEER

US Army Corps of Engineers
Norfolk District

| REV. | DATE | DESCRIPTION | BY | APP. |
|---|---|---|---|---|

DESIGNED: CMT
DRAWN: LSM
CHECKED: SAC
SUBMITTED:
DATE: 13-FEB-04
SCALE: AS SHOWN
PROJECT NO. 50228948
NORFOLK DISTRICT FILE NO. RAD 274 .0011
DRAWING NO. 831-90-05
SPECIFICATION NO.
Last, worked on:
File name:
Plot scale: 1:1

NORFOLK DISTRICT
CORPS OF ENGINEERS
NORFOLK, VIRGINIA

FINAL
SUBMITTAL

SETTLING BASIN
RADFORD ARMY AMMUNITION PLANT
RADFORD, VIRGINIA

SETTLING BASIN 403-1 - PLAN

S-101
SHEET 2 OF 7

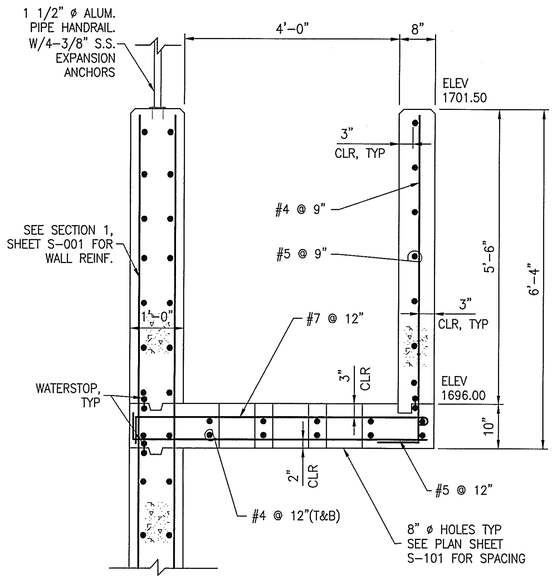


SECTION 4 (S-101 | S-301)
3/4"=1'-0"

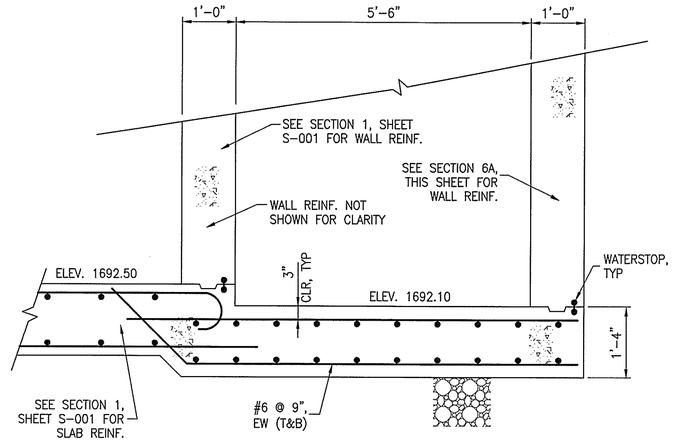


SECTION 5 (S-101 | S-301)
3/4"=1'-0"

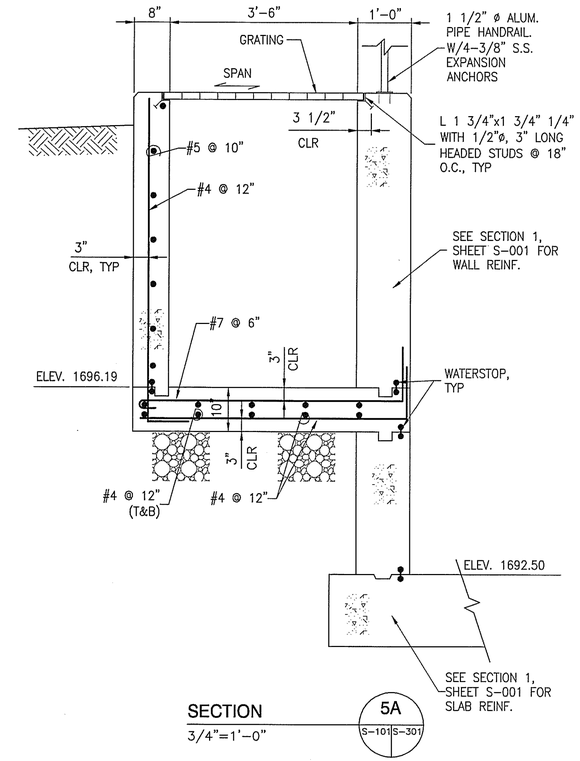


SECTION 5A (S-101 | S-301)
3/4"=1'-0"

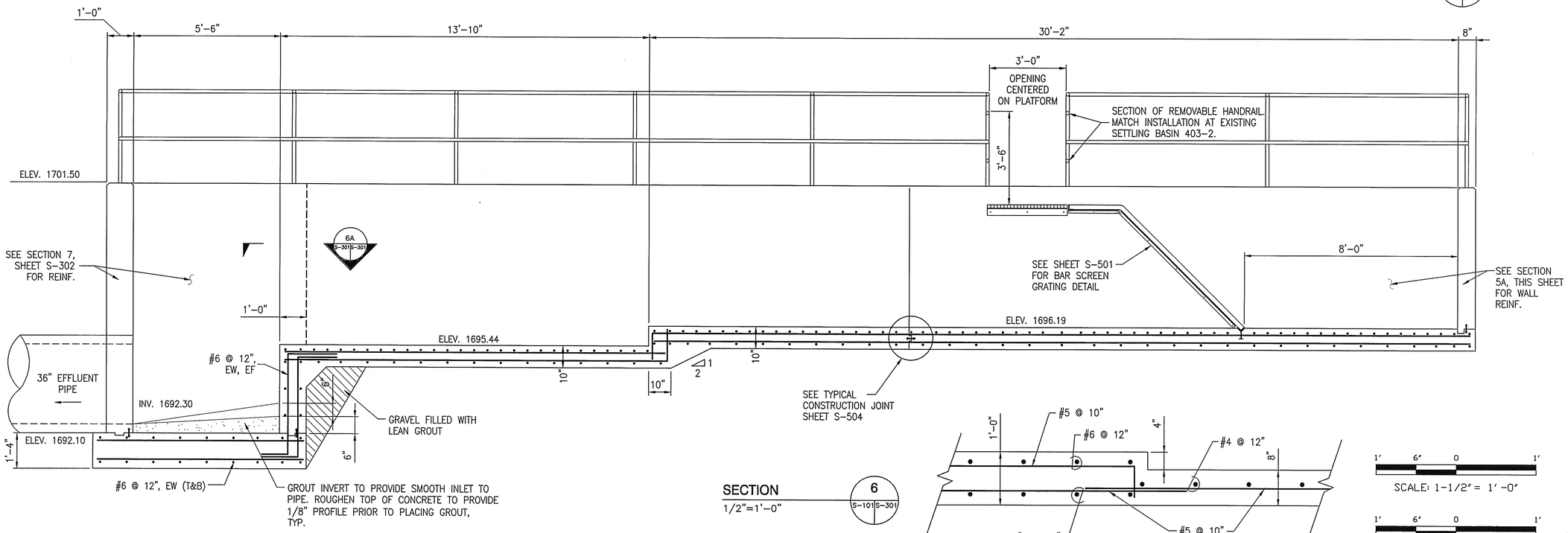


SECTION 6 (S-101 | S-301)
1/2"=1'-0"

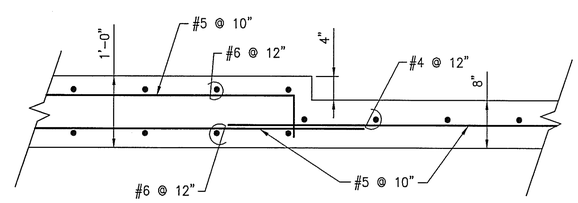


SECTION 6A (S-301 | S-301)
3/4"=1'-0"

1' 6' 0 1'
SCALE: 1-1/2" = 1'-0"

1' 6' 0 1'
SCALE: 3/4" = 1'-0"

1' 0 1' 2'
SCALE: 1" = 1'-0"

COMMONWEALTH OF VIRGINIA
2/17/04
STEVEN A. CAMPBELL
NO. 015251
PROFESSIONAL ENGINEER

US Army Corps of Engineers
Norfolk District

| REV. | DATE | DESCRIPTION | BY | APP'D |
|---|---|---|---|---|

DESIGNED: CMT | CHECKED: SAC | DATE: 13-FEB-04
DRAWN: LSM | SUBMITTED: | SCALE: AS SHOWN
PROJECT NO. 5022894B | NORFOLK DISTRICT FILE NO. RAD 274 .0012
DRAWING NO. 831-90-05 | SPECIFICATION NO.
Last revised on: | Plot scale: 1:1
File name:

NORFOLK DISTRICT
CORPS OF ENGINEERS
NORFOLK, VIRGINIA

FINAL
SUBMITTAL

SETTLING BASIN
RADFORD ARMY AMMUNITION PLANT
RADFORD, VIRGINIA

SETTLING BASIN-SECTIONS

S-301
SHEET 3 OF 7

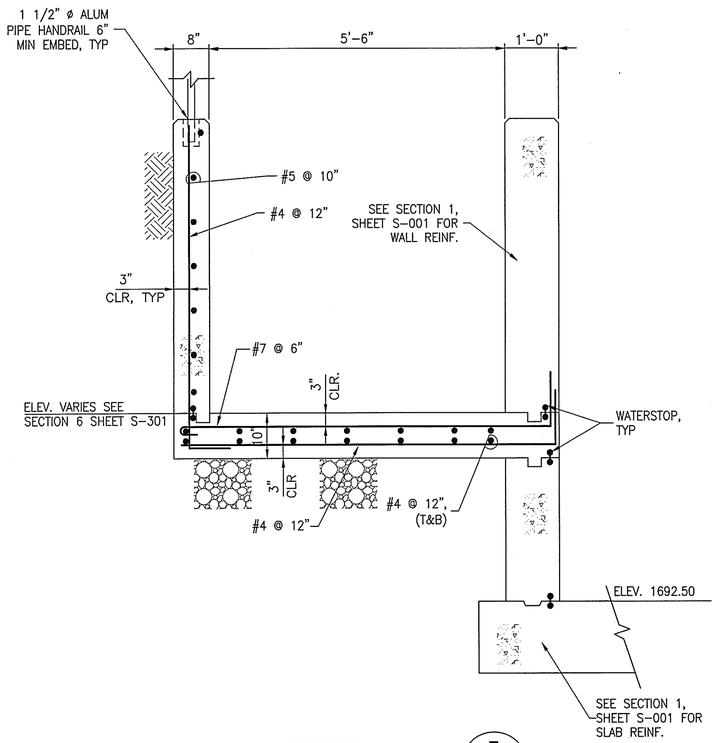


SECTION 7 (S-101 S-302)
3/4"=1'-0"

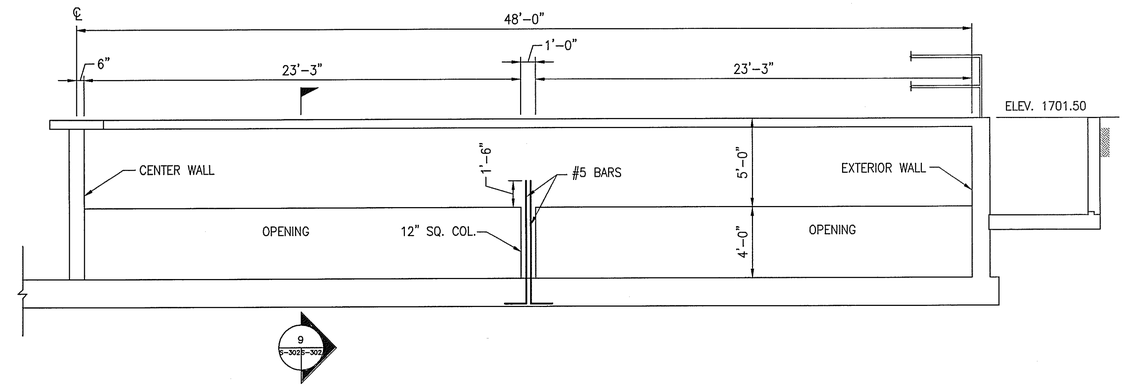


SECTION 8 (S-101 S-302)
1/4"=1'-0"

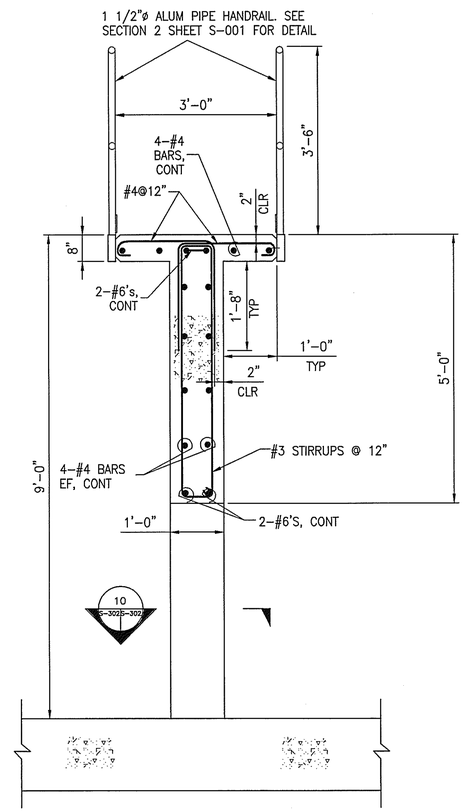


SECTION 9 (S-302 S-302)
3/4"=1'-0"

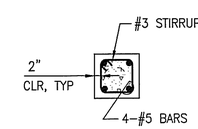


SECTION 10 (S-302 S-302)
3/4"=1'-0"

4' 2' 0 4'
SCALE: 1/4" = 1'-0"

1' 6" 0 1'
SCALE: 3/4" = 1'-0"

COMMONWEALTH OF VIRGINIA
2/17/04
STEVEN A. CAMPBELL
No. 015251
PROFESSIONAL ENGINEER

US Army Corps of Engineers
Norfolk District

| REV. | DATE | DESCRIPTION | BY | APPR |
|---|---|---|---|---|

DESIGNED: CMT | CHECKED: SAC | DATE: 13-FEB-04
DRAWN: LSM | SUBMITTED: | SCALE: AS SHOWN
PROJECT NO. 50228948 | NORFOLK DISTRICT FILE NO. RAD 274 .0013
DRAWING NO. 831-90-05 | SPECIFICATION NO.
Last worked on:
File name:
Plot scale: 1:1

NORFOLK DISTRICT
CORPS OF ENGINEERS
NORFOLK, VIRGINIA

FINAL
SUBMITTAL

SETTLING BASIN
RADFORD ARMY AMMUNITION PLANT
RADFORD, VIRGINIA

SETTLING BASIN- SECTIONS

S-302
SHEET 4 OF 7

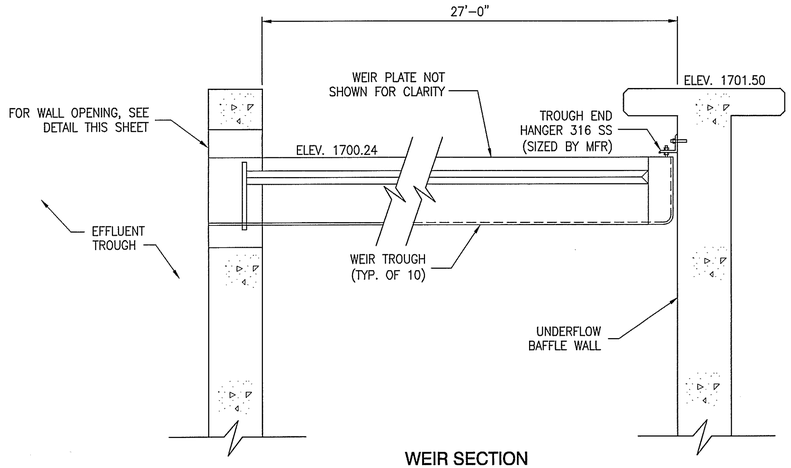


## WEIR SECTION

SCALE: 3/4"=1'-0"

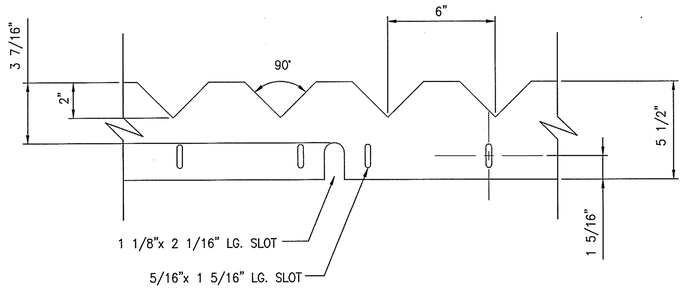


## WEIR PLATE DETAIL

SCALE: 3"=1'-0"

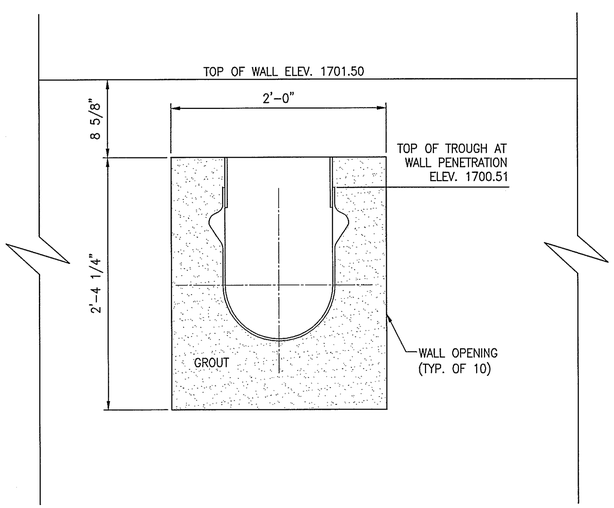


## WALL OPENING FOR TROUGH PLACEMENT

SCALE: 1 1/2"=1'-0"

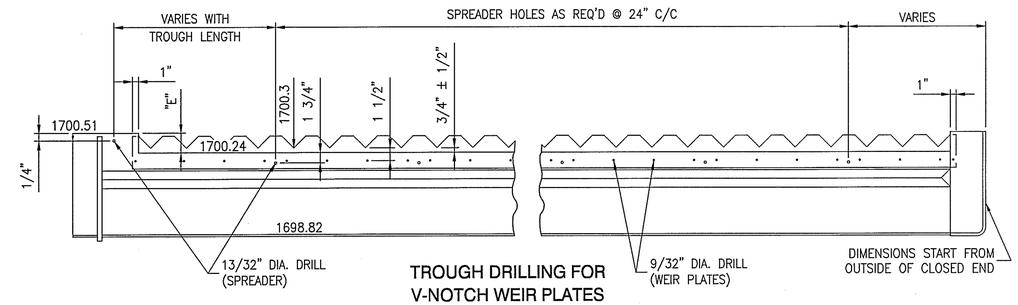


## TROUGH DRILLING FOR V-NOTCH WEIR PLATES

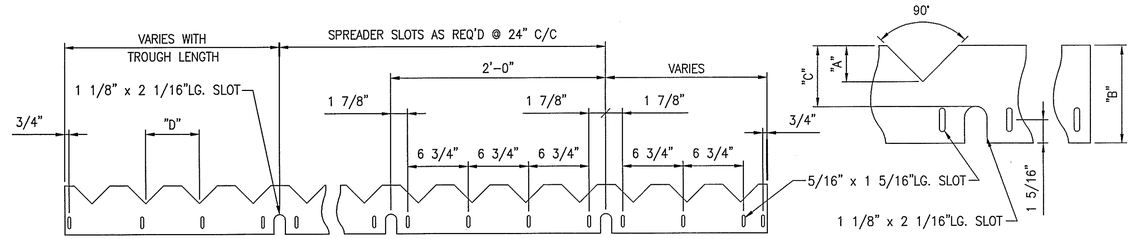


## V-NOTCH WEIR PLATE DRILLING ±1/2" ADJUSTMENT

| V-NOTCH SIZE "A" | "B" | "C" | "D" | "E" |
|---|---|---|---|---|
| 2" | 5 1/2" | 3 7/16" | 4"or 6" | 3 1/4" |
| 3" | 6 1/2" | 4 7/16" | 6" | 4 1/4" |

## TROUGH AND WEIR PLATE NOTES:

1. BOTTOM OF V-NOTCH WEIR SHALL BE PLACED AT ELEV. 1700.30. THIS ELEVATION SHALL BE WITH THE WEIR PLATE AT THE CENTER OF ITS ± 1/2" ADJUSTMENT.

2. TROUGH SPACING SHALL BE 4'-6" FEET CENTER TO CENTER, WITH THE END TROUGH BEING PLACED AT 4'-6" FROM THE CENTER OF THE TROUGH TO THE INTERIOR FACE OF WALL.

## TROUGH AND WEIR PLATE ATTACHMENT DETAIL

SCALE: 1 1/2"=1'-0"

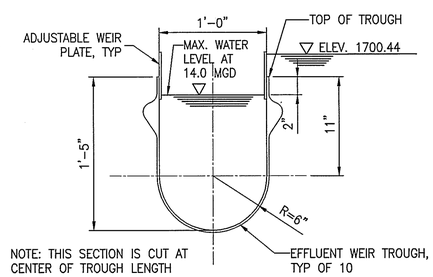


## TYPICAL WEIR TROUGH SECTION

SCALE: 1 1/2"=1'-0"

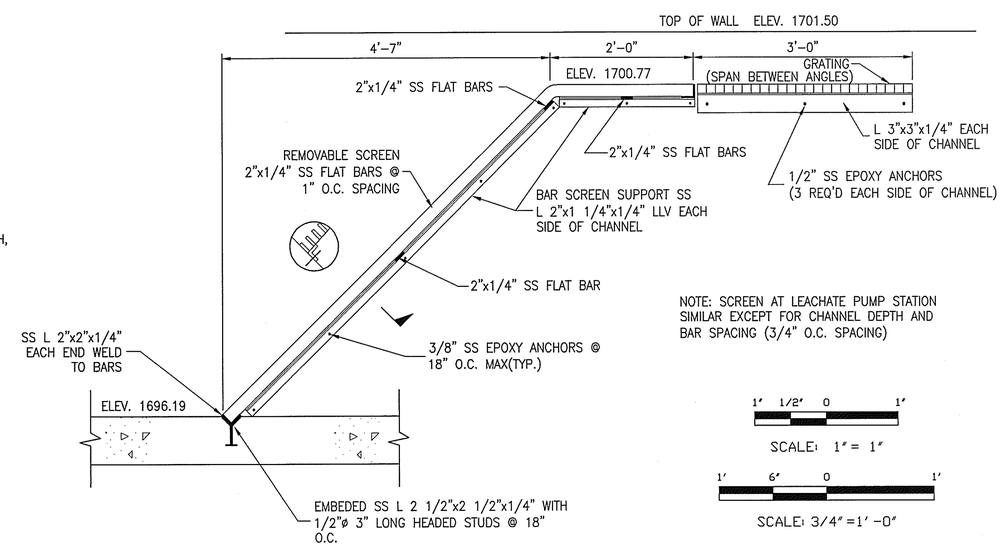


NOTE: SCREEN AT LEACHATE PUMP STATION SIMILAR EXCEPT FOR CHANNEL DEPTH AND BAR SPACING (3/4" O.C. SPACING)

## BAR SCREEN DETAIL

SCALE: 1"=1'-0"

1' 1/2' 0 1'
SCALE: 1" = 1"

1' 6' 0 1'
SCALE: 3/4" =1' -0"

1' 6' 0 1'
SCALE: 1-1/2" = 1' -0"

1' 6' 0 1'
SCALE: 3" = 1' -0"

COMMONWEALTH OF VIRGINIA
2/17/04
STEVEN A. CAMPBELL
NO. 015251
PROFESSIONAL ENGINEER

US Army Corps of Engineers
Norfolk District

| REV. | DATE | DESCRIPTION | BY | APP. |
|---|---|---|---|---|

DESIGNED: CMT
DRAWN: LSM
CHECKED: SAC
SUBMITTED:
DATE: 13-FEB-04
SCALE: AS SHOWN
PROJECT NO. 50228948
NORFOLK DISTRICT FILE NO. RAD 274 .0014
DRAWING NO. 831-90-05
SPECIFICATION NO.
Last worked on:
File name:
Plot scale: 1:1

NORFOLK DISTRICT
CORPS OF ENGINEERS
NORFOLK, VIRGINIA

FINAL
SUBMITTAL

SETTLING BASIN
RADFORD ARMY AMMUNITION PLANT
RADFORD, VIRGINIA

SETTLING BASIN-TYPICAL DETAILS

S-501
SHEET 5 OF 7

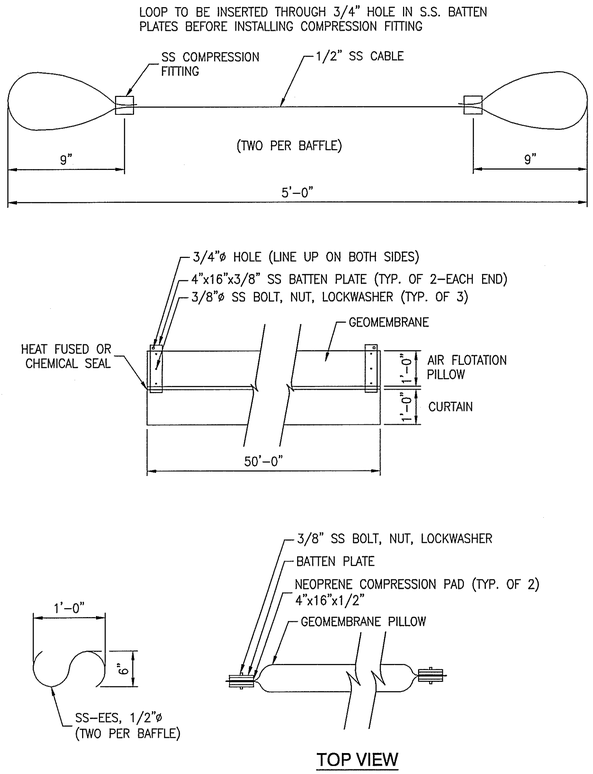


TOP VIEW

TYPE "A" BAFFLE

NOT TO SCALE

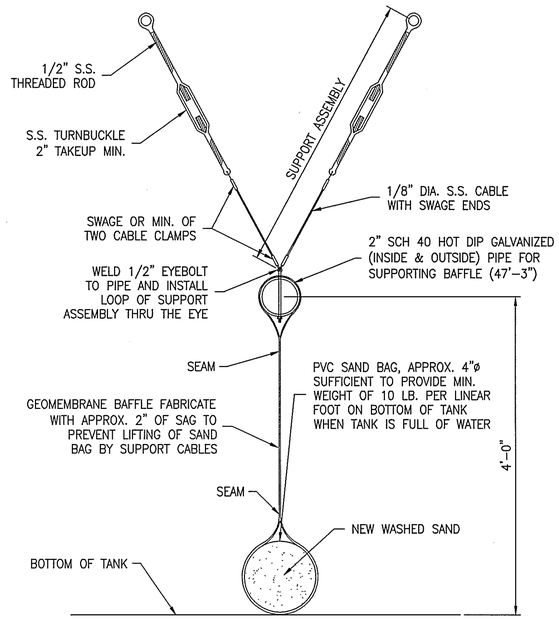


TYPE "B" BAFFLE

NOT TO SCALE

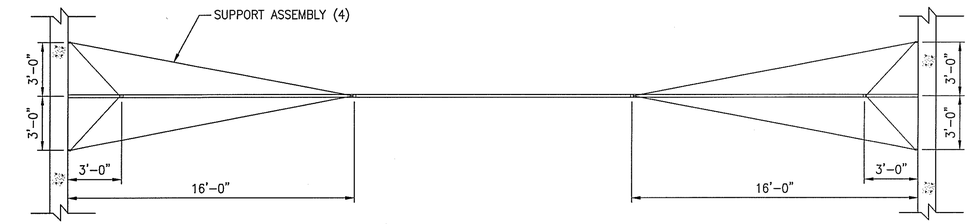


PLAN - TYPE "B" BAFFLE

NOT TO SCALE

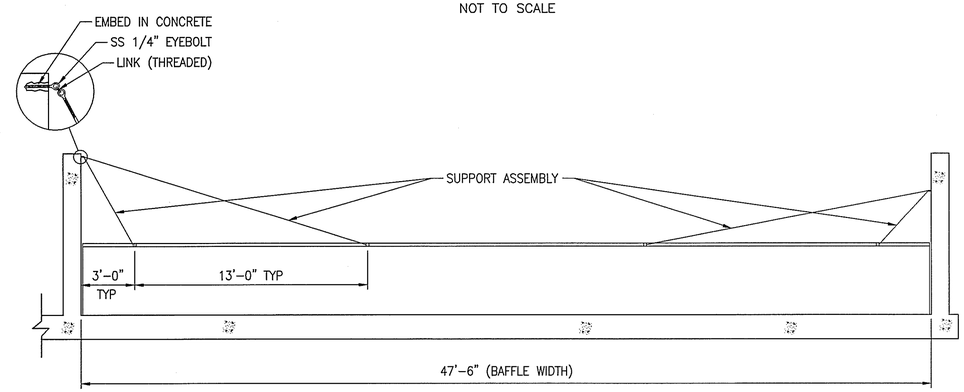


ELEVATION - TYPE "B" BAFFLE

NOT TO SCALE

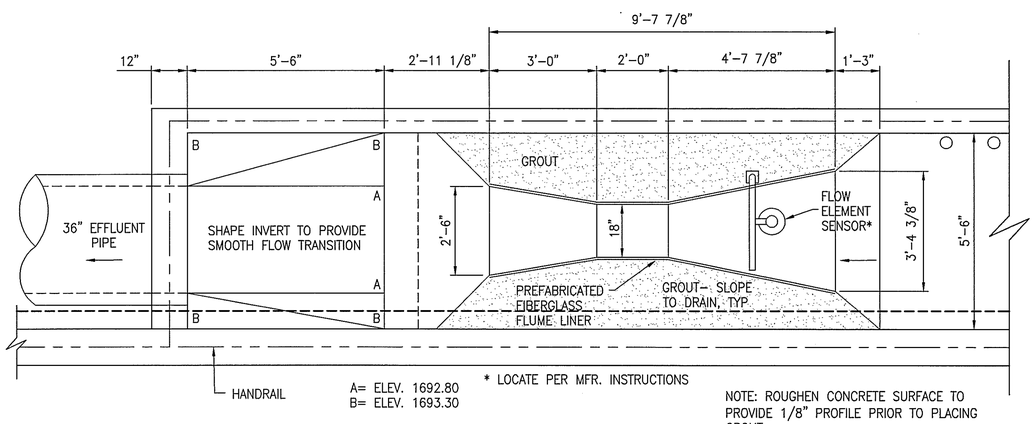


NOTE: ROUGHEN CONCRETE SURFACE TO PROVIDE 1/8" PROFILE PRIOR TO PLACING GROUT.

PARSHALL FLUME- PLAN

1/2"=1'-0"

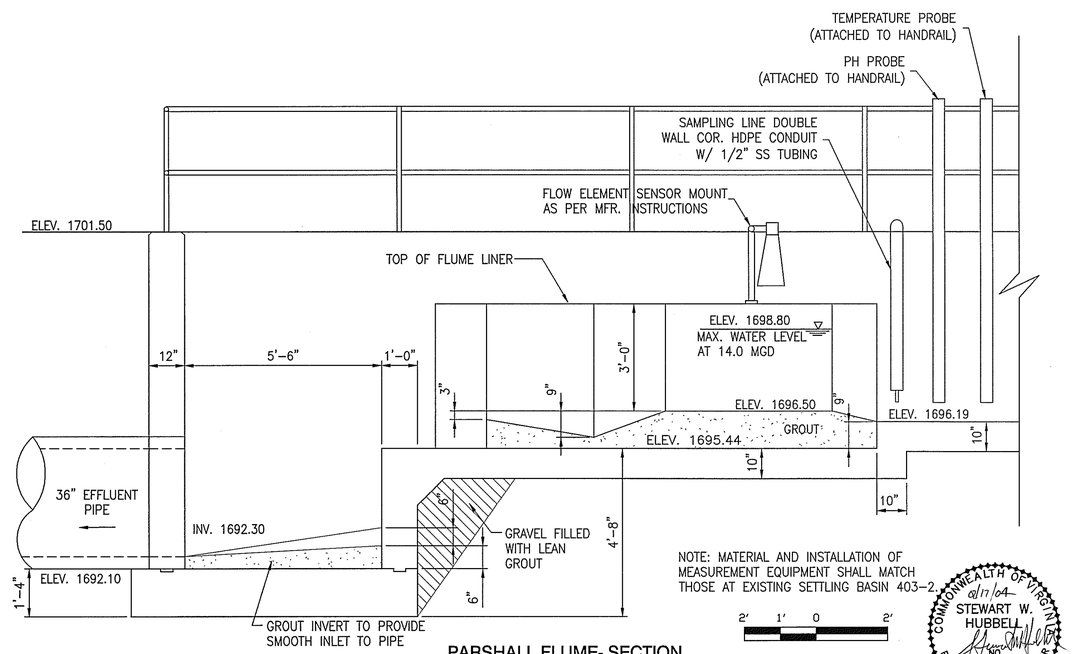


NOTE: MATERIAL AND INSTALLATION OF MEASUREMENT EQUIPMENT SHALL MATCH THOSE AT EXISTING SETTLING BASIN 403-2.

PARSHALL FLUME- SECTION

1/2"=1'-0"

2' 1' 0 2'

SCALE: 1/2" = 1'-0"

COMMONWEALTH OF VIRGINIA
02/17/04
STEWART W. HUBBELL
No. 07420
PROFESSIONAL ENGINEER

US Army Corps of Engineers
Norfolk District

| REV. | DATE | DESCRIPTION | BY | APP. |
|---|---|---|---|---|

DESIGNED: CMT
DRAWN: ATC/LSM
CHECKED: SAC
SUBMITTED:
DATE: 13-FEB-04
SCALE: AS SHOWN
PROJECT NO. 5022894B
NORFOLK DISTRICT FILE NO. RAD 274 .0015
DRAWING NO. 831-90-05
SPECIFICATION NO.
Last worked on:
File name:
Plot scale: 1:1

NORFOLK DISTRICT
CORPS OF ENGINEERS
NORFOLK, VIRGINIA

FINAL
SUBMITTAL

SETTLING BASIN
RADFORD ARMY AMMUNITION PLANT
RADFORD, VIRGINIA

SETTLING BASIN-TYPICAL DETAILS

S-502
SHEET 6 OF 7

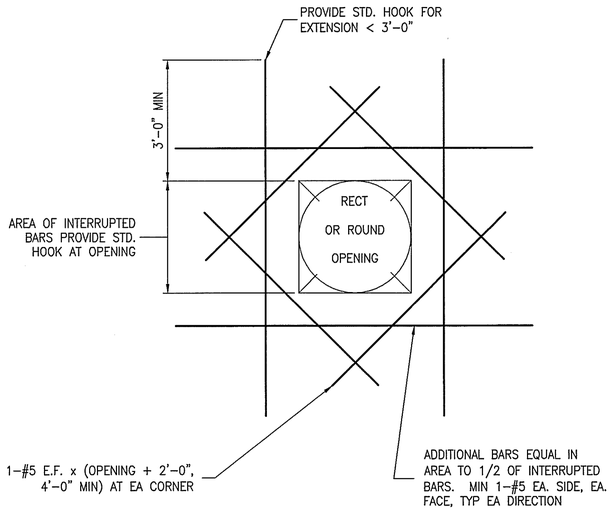


NOTE: BARS INDICATED ARE NOT REQ'D @ OPENINGS OF 10" OR LESS

## TYP. WALL OPENING DETAIL

NOT TO SCALE

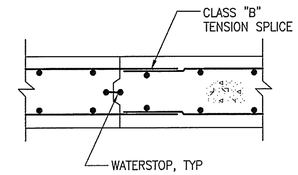


## TYP. SLAB CONSTRUCTION JOINT DETAIL

NOT TO SCALE

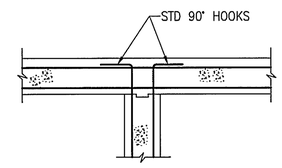


## INTERSECTION DETAIL

NOT TO SCALE

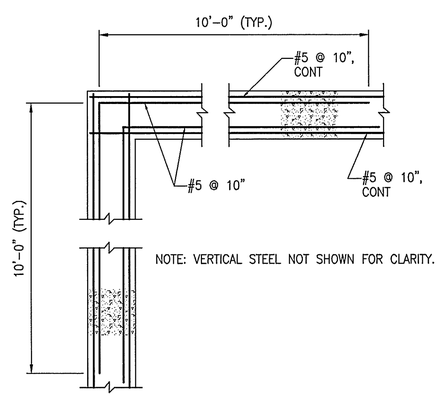


## WALL CORNER DETAIL

NOT TO SCALE

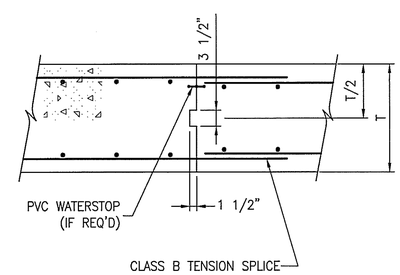


## TYP. WALL CONSTRUCTION JOINT DETAIL

NOT TO SCALE

COMMONWEALTH OF VIRGINIA
2/17/04
STEVEN A. CAMPBELL
No. 015251
PROFESSIONAL ENGINEER

US Army Corps of Engineers
Norfolk District

| REV. | DATE | DESCRIPTION | BY | APPR. |
|---|---|---|---|---|
| | | | | |

DESIGNED: CMT
DRAWN: LSM
CHECKED: SAC
SUBMITTED:
DATE: 13-FEB-04
SCALE: AS SHOWN
PROJECT NO. 50228948
NORFOLK DISTRICT FILE NO. RAD 274 .0016
DRAWING NO. 831-90-05
SPECIFICATION NO.
Last saved on:
Plot scale: 1:1
Plot date:

NORFOLK DISTRICT
CORPS OF ENGINEERS
NORFOLK, VIRGINIA

FINAL
SUBMITTAL

SETTLING BASIN
RADFORD ARMY AMMUNITION PLANT
RADFORD, VIRGINIA

MISCELLANEOUS DETAILS

S-504
SHEET 7 OF 7

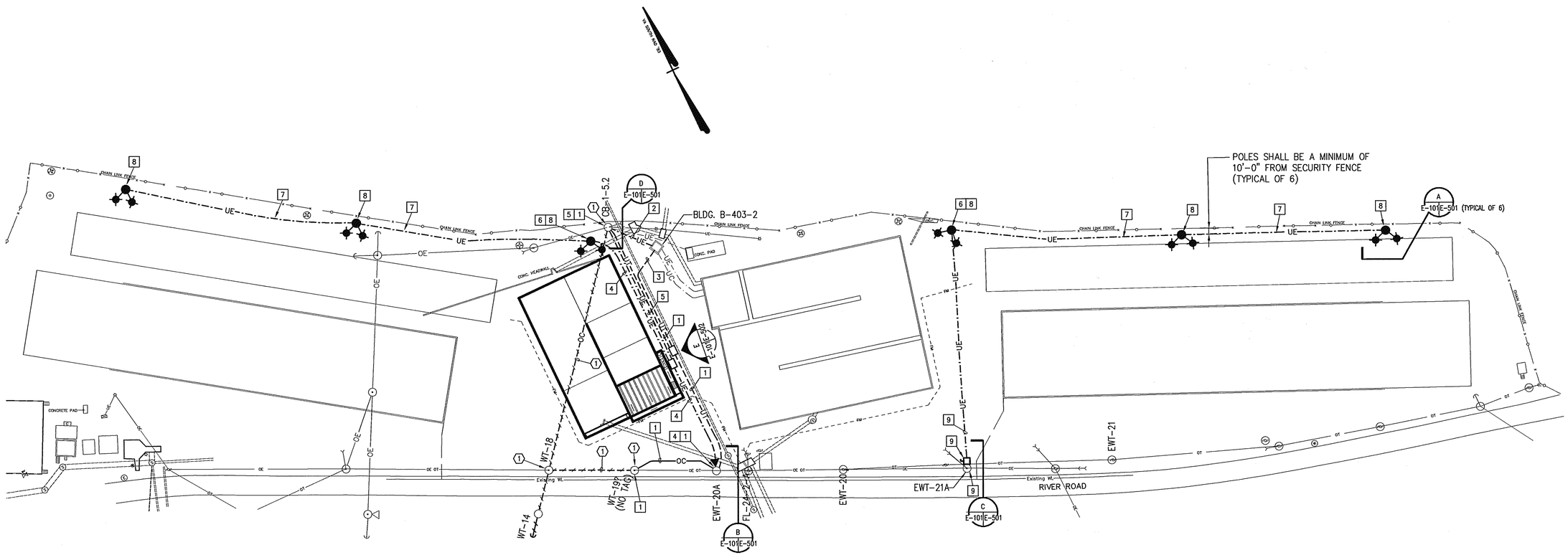


## SITE PLAN – ELECTRICAL

SCALE: 1" = 50'-0"

## NEW WORK NOTES: □

1. PROVIDE NEW 16 PAIR #18 UTP HEAVY DUTY CABLE FROM JUNCTION BOX ON POLE WT-19 (NO TAG) LASHED ON MESENGER TO POLE EWT-20A AND UNDERGROUND CONDUIT FROM POLE EWT-20A TO CB-1-5.2. MAKE ALL TERMINATIONS IN EXISTING JUNCTION BOXES ON POLES WT-19 AND CB-1-5.2. CABLE SHALL BE CONTINUOUS FROM POLE WT-19 AND POLE CB-1-5.2 WITH NO SPLICES. ALL NEW CABLE SHALL BE IN PLACE BEFORE EXISTING CABLE IS REMOVED – SEE DEMO NOTE 1. COLOR CODE SHALL MATCH EXISTING.

2. PROVIDE 20A-1POLE CIRCUIT BREAKER IN 120/240 VOLT PANELBOARD LOCATED ON POLE CB-1-5.2 AND FEED RECORDING EQUIPMENT IN BUILDING B-403-2 WITH 3 #12 IN A 1" UNDERGROUND CONDUIT. PROVIDE QUADRAPLEX 20A RECEPTACLE ON INTERIOR OF BUILDING FOR PLUG-IN RECORDING EQUIPMENT.

3. PROVIDE (6) SHIELDED TWISTED PAIR (STP) #18 CABLES WITH PVC JACKET FROM METERING LOCATION AT THE SETTLING LAGOON TO THE RECORDER LOCATED IN BUILDING B-403-2 VIA 1" UNDERGROUND CONDUIT.

4. PROVIDE NEW 7.2 kV/277 VOLT 25KVA TRANSFORMER ON EXISTING POLE EWT-20A AS SHOWN IN DETAIL B. PROVIDE FEEDERS IN A 2" UNDERGROUND CONDUIT. PROVIDE A 16" x 12" x 6" NEMA 4X PULLBOX AT THE METERING LOCATION FOR FUTURE POWER TAP.

5. PROVIDE 20A-1POLE CIRCUIT BREAKER IN 120/240 VOLT PANELBOARD LOCATED ON POLE CB-1-5.2 AND FEED METERING EQUIPMENT AT THE METERING LOCATION WITH 3 #10 IN A 1" UNDERGROUND CONDUIT.

6. PROVIDE 30A-3 POLE ENCLOSED FUSED SWITCH, HOA SWITCH, AND CONTACTOR ALL IN A SINGLE NEMA 4X ENCLOSURE TO FEED THE SITE LIGHTING.

7. PROVIDE 3 #10 XHHW COPPER CONDUCTORS TO THE BASE OF EACH LIGHT POLE IN UNDERGROUND CONDUIT. SEE LIGHT POLE DETAIL A ON SHEET E-501 AND WIRING DIAGRAMS ON SHEET E-502.

8. PROVIDE (6) 35'-CLASS 5 WOOD POLES WITH (2) 400 WATT HIGH PRESSURE SODIUM FLOODLIGHTS EACH.

9. TAP EXISTING #2 TRIPLEX OVERHEAD 277/480 VOLT SECONDARY TO FEED A SINGLE 100A, 3P, 600 VOLT DISCONNECT SWITCH MOUNTED ON POLE EWT-21A. SEE DETAIL C. PROVIDE FEEDERS IN A 2" UNDERGROUND CONDUIT TO FEED THE EAST SITE LIGHTING.

## DEMOLITION NOTES: ⬡

1. REMOVE EXISTING OVERHEAD FIGURE-8 CONTROL CABLE. DOCUMENT AND DISCONNECT TERMINATIONS AT EACH END TO BE RECONNECTED TO NEW CABLE. DISCONNECTION AND REMOVAL SHALL NOT BE PERFORMED UNTIL THE NEW CABLE IS INSTALLED AND READY FOR TERMINATION. CABLE TO BE REMOVED IS PRESENTLY ROUTED FROM POLE #CB-1-5.2 VIA POLE WT-18 TO POLE WT-19 (NO TAG). SEE NEW WORK NOTE 1.

## GENERAL NOTES

- ALL CLEARANCES SHALL BE IN ACCORDANCE WITH IEEE C2 NATIONAL ELECTRICAL SAFETY CODE.
- ALL WORK SHALL BE IN ACCORDANCE WITH 2002 NFPA 70 "NATIONAL ELECTRICAL CODE" AND IEEE C2 "NATIONAL ELECTRICAL SAFETY CODE".
- ALL ITEMS REMOVED AND NOT REUSED SHALL BE DISPOSED OF PROPERLY OFF SITE.
- UNDERGROUND CONDUIT SHALL HAVE A MINIMUM OF 24" COVER TO TOP OF CONCRETE OR TOP OF CONDUIT FOR DIRECT BURIAL.

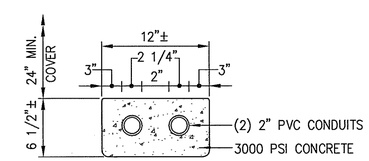


## TYPICAL CONCRETE ENCASED CONDUIT DETAIL

SCALE: 1 1/2" = 1'-0"

NOTE: THIS DETAIL TYPICAL FOR ALL UNDERGROUND CONDUIT RUNS EXCEPT FOR RIGID GALVANIZED STEEL CONDUIT BETWEEN LIGHTING POLES.

1' 6' 0 1'

SCALE: 1-1/2" = 1'-0"

50' 25' 0 50'

SCALE: 1" =50'-0"

COMMONWEALTH OF VIRGINIA
2-16-04
Lawrence E. Perry, Jr.
CERTIFICATE No. 4834
CERTIFIED PROFESSIONAL ENGINEER

US Army Corps of Engineers
Norfolk District

| REV. | DATE | DESCRIPTION | BY | APP |
|---|---|---|---|---|

DESIGNED: GWW | CHECKED: GWW | DATE: 13-FEB-04
DRAWN: CAD | SUBMITTED: | SCALE: AS NOTED
PROJECT NO. 5022894B | NORFOLK DISTRICT FILE NO. RAD 274.0017
DRAWING NO. 831-90-05 | SPECIFICATION NO.
Last worked on: | Plot scale: 1:1
File name:

NORFOLK DISTRICT
CORPS OF ENGINEERS
NORFOLK, VIRGINIA

FINAL
SUBMITTAL

SETTLING BASIN
RADFORD ARMY AMMUNITION PLANT
RADFORD, VIRGINIA

SITE PLAN - NOTES AND DETAIL

E-101
SHEET 1 OF 3

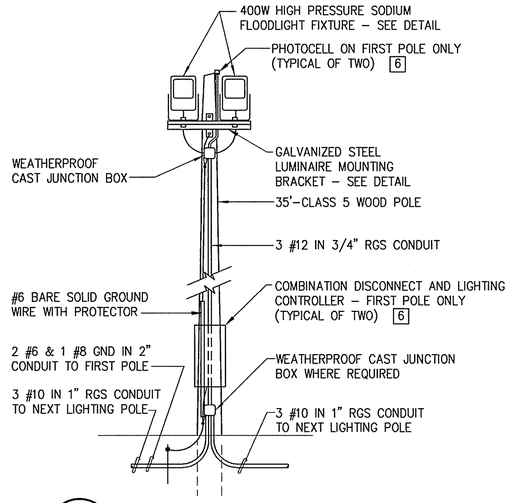


A LIGHTING POLE DETAIL
E-101 E-501 NOT TO SCALE

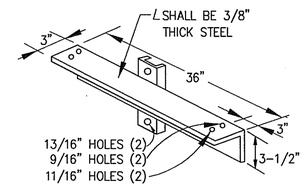


TWO LUMINAIRE MOUNTING BRACKET – "A"

NOTES:
1. ALL MATERIALS SHOWN SHALL BE HOT-DIP GALVANIZED.
2. PROVIDE BOLTS AND OTHER HARDWARE AS REQUIRED.

LUMINAIRE MOUNTING BRACKET
NOT TO SCALE

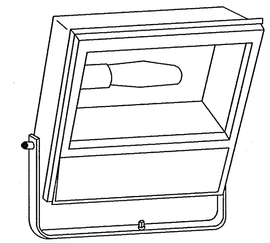

NOTE:
NEMA BEAM SPREAD CONFIGURATION SHALL BE 6X5 AND SHALL BE IN ACCORDANCE WITH I.E.S. DEFINITIONS.

LUMINAIRE REQUIREMENTS

1. HOUSING – DIE CAST ALUMINUM, WITH BAKED ENAMEL OR POLYESTER POWDER FINISH.
2. REFLECTOR – ANODIZED ALUMINUM.
3. DOOR – HINGED ALUMINUM, WITH GASKET AND CAPTIVE SCREWS OR CAM LATCH FASTENERS.
4. INTEGRAL MULTI-TAP BALLAST.
5. STAINLESS STEEL OR NONCORROSIVE HARDWARE.
6. PORCELAIN SOCKET WITH VIBRATION-PROOF LAMP GRIP SHELL.
7. LAMP – 400 WATT HIGH PRESSURE SODIUM.
8. PROVIDE 3/C #16 WEATHERPROOF CORD, MIN. 24" LONG.
9. LENS – TEMPERED, IMPACT RESISTANT, CLEAR GLASS.
10. UL LISTED – SUITABLE FOR OUTDOOR WET LOCATIONS.
11. HOUSING COLOR SHALL BE DARK BRONZE UNLESS INDICATED OTHERWISE.

FLOODLIGHT LUMINAIRE
NOT TO SCALE

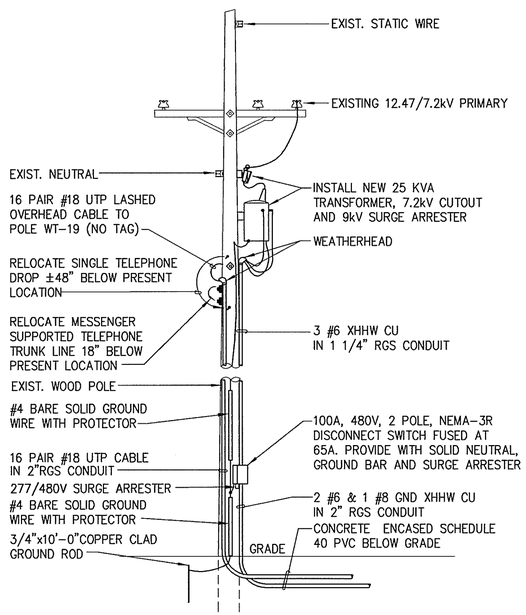


B POLE EWT-20A DETAIL
E-101 E-501 NOT TO SCALE

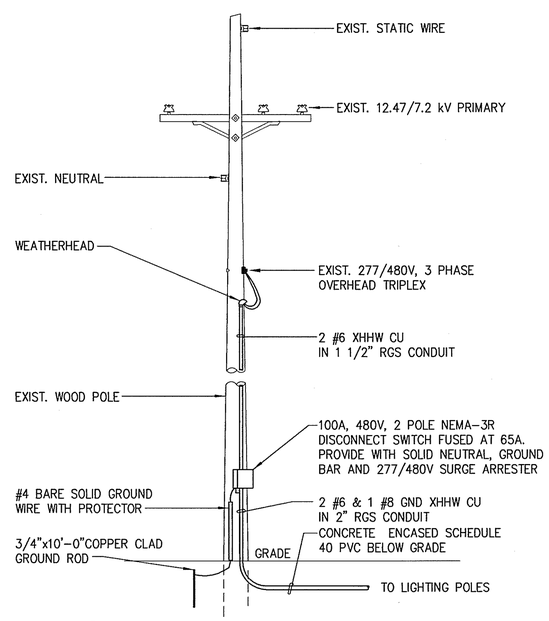


C POLE EWT-21A DETAIL
E-101 E-501 NOT TO SCALE

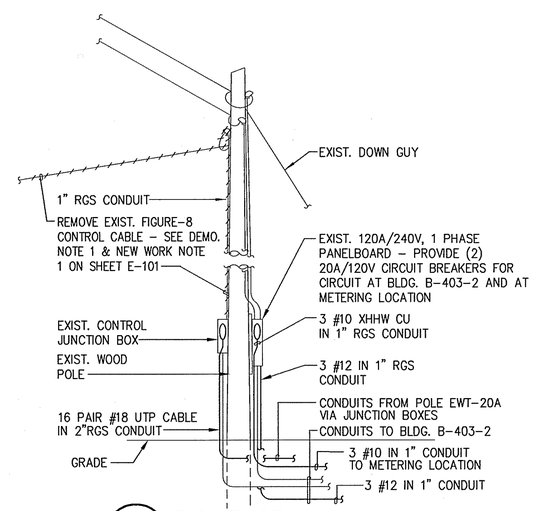


D POLE CB-1-5.2
E-101 E-501 NOT TO SCALE

COMMONWEALTH OF VIRGINIA
2-16-09
Lawrence E. Perry, Jr.
CERTIFICATE No. 4834
CERTIFIED PROFESSIONAL ENGINEER

US Army Corps of Engineers
Norfolk District

| REV. | DATE | DESCRIPTION | BY | APP. |
|---|---|---|---|---|

DESIGNED: GWW | CHECKED: GWW | DATE: 13-FEB-04
DRAWN: CAD | SUBMITTED: | SCALE: AS NOTED
PROJECT NO. 5022894B | NORFOLK DISTRICT FILE NO. RAD 274.0018
DRAWING NO. 831-90-05 | SPECIFICATION NO.
Last worked on: | Plot scale: 1:1
File name:

NORFOLK DISTRICT
CORPS OF ENGINEERS
NORFOLK, VIRGINIA

FINAL
SUBMITTAL

SETTLING BASIN
RADFORD ARMY AMMUNITION PLANT
RADFORD, VIRGINIA

DETAILS

E-501
SHEET 2 OF 3

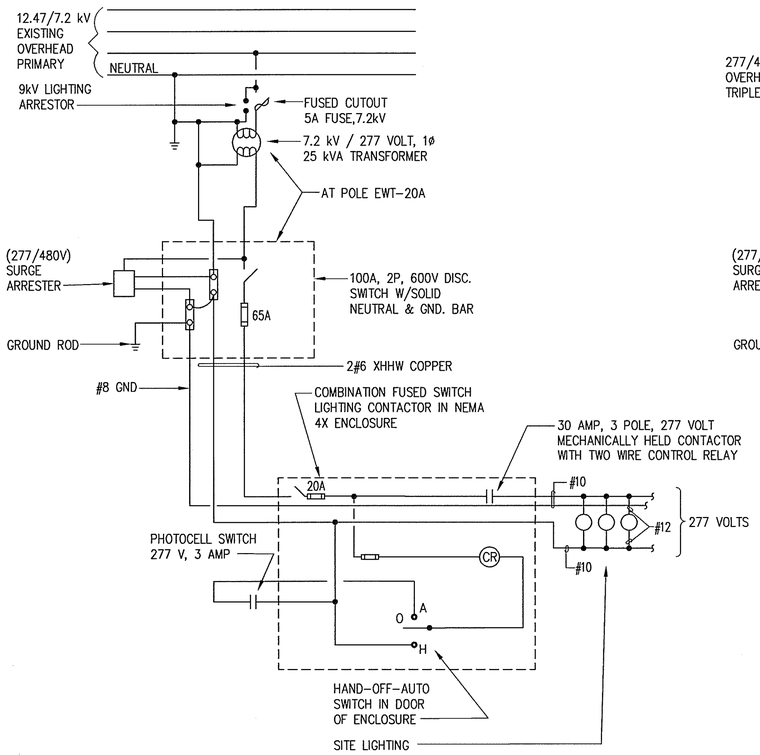


## WIRING DIAGRAM FOR WEST SITE LIGHTING

SCHEMATIC

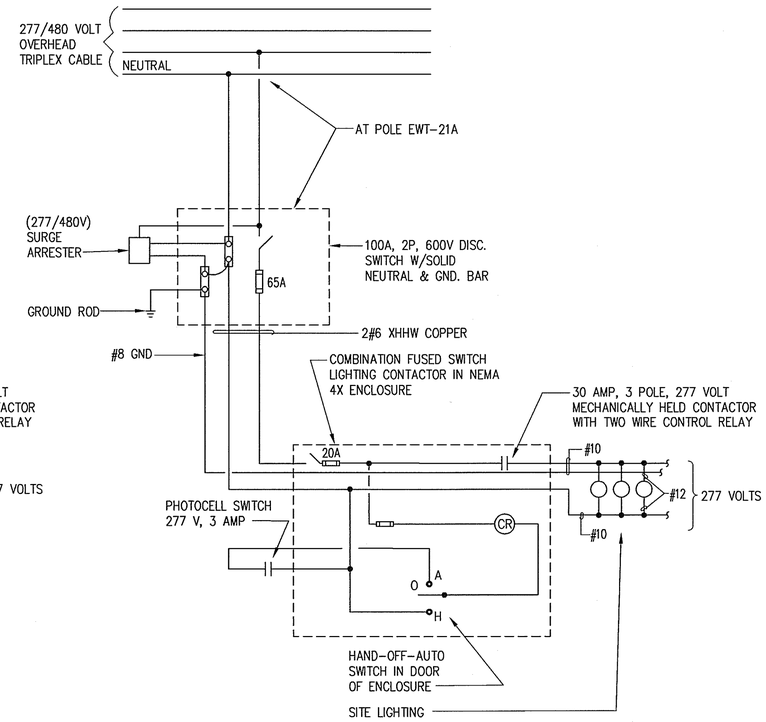


## WIRING DIAGRAM FOR EAST SITE LIGHTING

SCHEMATIC

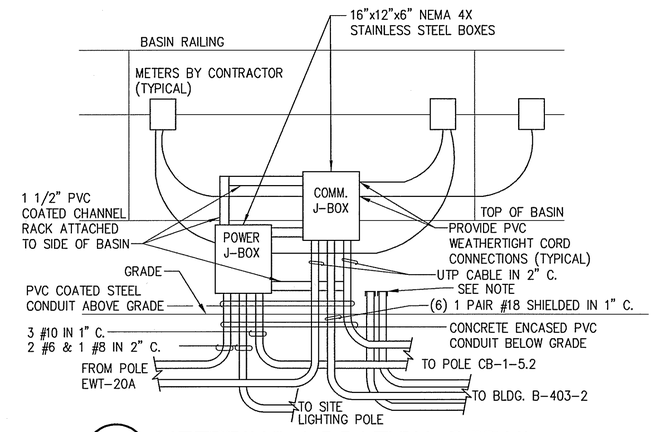


## E METERING LOCATION DETAIL

E-101E-502 NOT TO SCALE

NOTE : PROVIDE 1 1/2" CONDUIT FOR FACTORY TERMINATED CABLE AND A DOUBLE WALLED CORRUGATED HDPE CONDUIT WITH SMOOTH INTERIOR FOR 1/2" S.S. SAMPLING TUBE. CAP FOR INSTALLATION BY METERING CONTRACTOR. METERS BY CONTRACTOR. INSTALL IN ACCORDANCE WITH MANUFACTURERS INSTRUCTIONS.

NOTES:

1. ALL RACKS AND SUPPORTS SHALL BE WELDED STEEL AS SHOWN AND HOT DIPPED AFTER FABRICATION. PVC COATING SHALL BE FIELD APPLIED WHERE NOTED.
2. ELECTRICAL CHANNEL, ENCLOSURES AND CONDUIT STRAPS SHALL BE ATTACHED WITH STAINLESS STEEL THRU BOLTS AND NUTS. WHERE ATTACHED TO CONCRETE WALLS, USE LEAD ANCHORS WITH STAINLESS STEEL LAG SCREWS.
3. ALL STRUCTURAL STEEL RACKS AND SUPPORTS FOR ELECTRICAL WORK SHALL BE BONDED TO THE GROUNDING SYSTEM WITH #4 SOLID COPPER WIRE. WHERE GROUNDING SYSTEM IS UNKNOWN OR NOT PRESENT, BOND TO A NEW DRIVEN GROUND ROD.

COMMONWEALTH OF VIRGINIA
2-16-04
Lawrence E. Perry, Jr.
CERTIFICATE No.
4834
CERTIFIED PROFESSIONAL ENGINEER

US Army Corps of Engineers
Norfolk District

| REV. | DATE | DESCRIPTION | BY | APVD |
|---|---|---|---|---|

DESIGNED: GWW
DRAWN: CAD
PROJECT NO. 50228948
DRAWING NO. 831-90-05
Last worked on:
File name:
CHECKED: GWW
SUBMITTED:
DATE: 13-FEB-04
SCALE: AS SHOWN
NORFOLK DISTRICT FILE NO. RAD 274.0019
SPECIFICATION NO.
Plot scale: 1:1

NORFOLK DISTRICT
CORPS OF ENGINEERS
NORFOLK, VIRGINIA

FINAL
SUBMITTAL

SETTLING BASIN
RADFORD ARMY AMMUNITION PLANT
RADFORD, VIRGINIA

DETAILS AND DIAGRAMS

E-502
SHEET 3 OF 3