AMENDMENT OF SOLICITATION/MODIFICATION OF CONTRACT

1. CONTRACT ID CODE	PAGE OF PAGES	
J	1	2

2. AMENDMENT/MODIFICATION NO.	3. EFFECTIVE DATE	4. REQUISITION/PURCHASE REQ. NO.	5. PROJECT NO.(If applicable)
0003	08-Sep-2004		

6. ISSUED BY CODE W91236

USA ENGINEER DISTRICT, NORFOLK
CONTRACTING OFFICE
803 FRONT STREET
NORFOLK VA 23510-1096

7. ADMINISTERED BY (If other than item 6) CODE

See Item 6

8. NAME AND ADDRESS OF CONTRACTOR (No., Street, County, State and Zip Code)

CODE FACILITY CODE

X	9A. AMENDMENT OF SOLICITATION NO. W91236-04-R-0003
X	9B. DATED (SEE ITEM 11) 06-Nov-2003
	10A. MOD. OF CONTRACT/ORDER NO.
	10B. DATED (SEE ITEM 13)

11. THIS ITEM ONLY APPLIES TO AMENDMENTS OF SOLICITATIONS

[X] The above numbered solicitation is amended as set forth in Item 14. The hour and date specified for receipt of Offer [X] is extended, [ ] is not extended.

Offer must acknowledge receipt of this amendment prior to the hour and date specified in the solicitation or as amended by one of the following methods: (a) By completing Items 8 and 15, and returning 1 copies of the amendment; (b) By acknowledging receipt of this amendment on each copy of the offer submitted; or (c) By separate letter or telegram which includes a reference to the solicitation and amendment numbers. FAILURE OF YOUR ACKNOWLEDGMENT TO BE RECEIVED AT THE PLACE DESIGNATED FOR THE RECEIPT OF OFFERS PRIOR TO THE HOUR AND DATE SPECIFIED MAY RESULT IN REJECTION OF YOUR OFFER. If by virtue of this amendment you desire to change an offer already submitted, such change may be made by telegram or letter, provided each telegram or letter makes reference to the solicitation and this amendment, and is received prior to the opening hour and date specified.

12. ACCOUNTING AND APPROPRIATION DATA (If required)

13. THIS ITEM APPLIES ONLY TO MODIFICATIONS OF CONTRACTS/ORDERS.
IT MODIFIES THE CONTRACT/ORDER NO. AS DESCRIBED IN ITEM 14.

[ ] A. THIS CHANGE ORDER IS ISSUED PURSUANT TO: (Specify authority) THE CHANGES SET FORTH IN ITEM 14 ARE MADE IN THE CONTRACT ORDER NO. IN ITEM 10A.

[ ] B. THE ABOVE NUMBERED CONTRACT/ORDER IS MODIFIED TO REFLECT THE ADMINISTRATIVE CHANGES (such as changes in paying office, appropriation date, etc.) SET FORTH IN ITEM 14, PURSUANT TO THE AUTHORITY OF FAR 43.103(B).

[ ] C. THIS SUPPLEMENTAL AGREEMENT IS ENTERED INTO PURSUANT TO AUTHORITY OF:

[ ] D. OTHER (Specify type of modification and authority)

E. IMPORTANT: Contractor [ ] is not, [ ] is required to sign this document and return _____ copies to the issuing office.

14. DESCRIPTION OF AMENDMENT/MODIFICATION (Organized by UCF section headings, including solicitation/contract subject matter where feasible.)

Subject Request for Proposal for City of New York Department of Environmental Protection (DEP), East of Hudson Administration Building, Mount Pleasant, NY, amended as follows:

See Contination Pages.

Except as provided herein, all terms and conditions of the document referenced in Item 9A or 10A, as heretofore changed, remains unchanged and in full force and effect.

15A. NAME AND TITLE OF SIGNER (Type or print)		16A. NAME AND TITLE OF CONTRACTING OFFICER (Type or print) TEL: EMAIL:	
15B. CONTRACTOR/OFFEROR (Signature of person authorized to sign)	15C. DATE SIGNED	16B. UNITED STATES OF AMERICA BY (Signature of Contracting Officer)	16C. DATE SIGNED 08-Sep-2004

SECTION SF 30 BLOCK 14 CONTINUATION PAGE

The following items are applicable to this modification:
CONTINUATION PAGE

Amendment No. 0003 Continuation Page

1. Due Date for submittal of Phase 2 proposals is October 19, 2004 at 2:00 pm.

2. Section 00010: Bid Schedule is added as shown on the attached pages.

3. Section 00800: Delete the following clauses and refer to those in the attachment provided with this Amendment labeled Section 00800 (44 pages) :

   52.211-10
   52.211-12
   52.248-3

4. Contractors must be registered in the DOD Central Contractor's Registration database to be eligible for an award. Information for registration and annual confirmation requirements may be obtained by calling 1-888-227-2423 or at http://www.ccr2000.com.

5. Attachments provided with this amendment:

   1. Price Proposal Schedule (2 pages)
   2. Section 00110 (17 pages)
   3. Section 00120 (10 pages)
   4. Section 00800 (44 pages)
   5. Phase 2 (584 pages)

SECTION 00010
PRICING PROPOSAL SCHEDULE

SCHEDULE I - BASE PROPOSAL.

The contractor shall furnish all plant, labor, material, equipment, etc. Necessary to perform all work in strict accordance with the terms and conditions set forth in the contract to include all attachments thereto. Total proposal and price breakdown information is shown below:

ITEM NO.	ITEM	LUMP SUM ($)
0001	For the design and construction of the East of Hudson Administrative Facility for use by the New York City Department of Environmental Protection.	
0001AA	All construction work on the East of Hudson Facility within the five (5) foot line (includes all work inside of a line drawn at a perpendicular distance of five feet outside of the exterior face of foundation walls).	
0001AB	All construction work outside the five (5) foot line at the East of Hudson Facility	

SCHEDULE II – OPTION #1.

The contractor shall furnish all plant, labor, material, equipment, etc. Necessary to perform all work in strict accordance with the terms and conditions set forth in the contract to include all attachments thereto. Total proposal and price breakdown information is shown below:

ITEM NO.	ITEM	LUMP SUM ($)
0001AA	For the procurement and installation of all furnishings as identified in the solicitation.	
	TOTAL SCHEDULE II (Items 0001AA)	

3 CERTIFICATION.

The undersigned certifies that all items submitted in the proposal and in 100 percent complete design documents (after contract award) will comply with the statement of work requirements and applicable technical specifications.

_____

Typed Name and Title with Authorized Signature

4. NOTES.

a. The Army will procure these facilities through a design and cost competition in accordance with the provisions set forth in this Request for Proposals (RFP). When a contract is awarded, it will be a "Firm Fixed Price Contract."

b. Any proposal which is materially unbalanced as to prices for Schedule I and II may be rejected as nonresponsive. An unbalanced proposal is one which is based on prices significantly less than cost for some work and prices which are significantly overstated for other work and can also exist where only overpricing or underpricing exists.

c. Failure to insert prices for each item in the Schedule I and II, Base Proposal will cause the proposal to be considered nonresponsive.

--End of Section--

SECTION 00110
PROPOSAL SUBMISSION REQUIREMENTS AND INSTRUCTIONS

SECTION 00110
PROPOSAL SUBMISSION REQUIREMENTS AND INSTRUCTIONS

1.00 GENERAL PROPOSAL INFORMATION.

a. General. Inasmuch as the proposal will describe the capability of the offeror to perform any resultant contract, as well as describe the understanding of the requirement of the Statement of Work, it should be specific and complete in every detail. The proposal should be prepared simply and economically, providing straight-forward, concise delineation of capabilities to perform satisfactorily the contract being sought. The proposal should therefore be practical, legible, clear and coherent.

b. Proposal Submissions and the Two (2) Phase Design-Build Process. This process requires potential contractors to submit their performance and capability information initially for review and consideration by the Government. Following the review, evaluation, and rating of these proposals, the Government will select up to five of the highest rated contractors to receive the technical requirements package and provide a technical and cost proposal for consideration by the Government. For the selected contractors, their technical and cost proposals will be reviewed by the Government. The technical information contained in this Phase 2 proposal will be reviewed, and evaluated by Government staff in direct response to the evaluation criteria set forth in Section 00120 – PROPOSAL EVALUATION CRITERIA. The final evaluation rating used for comparison, selection, and award will reflect both the rating received in Phase 1 and the evaluation rating received in Phase 2. Cost information will not be rated in either phase but will be evaluated in response to the funding limitations set forth in Section 00010 – PRICE PROPOSAL SCHEDULE. The proposal process for this two (2) phase procurement consists of the following individual pieces:

PHASE 1 PROPOSAL

- Pro Forma Information
- Offeror Past Performance Information (Completed Projects Customer Surveys)
- Offeror Project Key Personnel
- Technical Approach Narrative
- Offeror Relevant Experience (Example Projects)
- Other Information (Any additional information – background provided by the proposer)

PHASE 2 PROPOSAL

- Pro Forma Information
- Completed Price Proposal Information
- Technical Proposal Information
- Project Management Plans and Schedules
- Other Information (Any additional information – background provided by the proposer)

NOTE: FOR ALL THOSE CONTRACTORS WHO COMPETE IN BOTH PHASE 1 AND PHASE 2, THE CONTRACTOR'S PROPOSAL SHALL BE DEFINED AS: ALL INFORMATION WHICH WAS SUBMITTED IN RESPONSE TO THE REQUIREMENTS OF BOTH PHASES OF THE SOLICITATION.

2.00 PHASE 1 PROPOSAL SUBMISSION INSTRUCTIONS

a. Who May Submit.

(1) Proposals may be submitted by: firms formally organized as design/build entities, or by design firms and construction contractors that have associated specifically for this project. In the latter case, a single design firm or construction contractor may offer more than one proposal by entering into more than one such association. For the purpose of this solicitation, no distinction is made between formally organized design/build entities and project-specific design/build associations. Both are referred to as the

design/build offeror, (or simply "offeror"), or the design/build contractor, (or simply "Contractor"), after award of a contract.

(2) Any legally organized offeror may submit a proposal, provided that the offeror, or offeror's subcontractor, has on its permanent staff professional architects and engineers registered in the appropriate technical disciplines and provided that the requirements specified in the solicitation are met. All designs must be accomplished under the direct supervision of appropriately licensed professionals.

b. General Requirements.

(1) In order to effectively and equitably evaluate all proposals, the Contracting Officer must receive information sufficiently detailed to allow review and evaluation by the Government.

(2) Proposals must be submitted with an original and four copies. Original proposal shall be identified. Specific requirements are described below.

c. Size of Printed Matter Submissions.

(1) Written materials: Size A4 [or 8-1/2" x 11"] format.

(2) The proposals shall contain a detailed table of contents. If more than one binder is used, the complete table of contents shall be included in each. Any materials submitted but not required by this solicitation, (such as company brochures), shall be relegated to appendices.

d. Where to Submit. Offerors shall submit their proposal packages to the Norfolk District at the address shown in Block 8 of Standard Form 1442.

e. Submission Deadline. Proposals shall be received by the Norfolk District no later than the time and date specified in Block 13 of Standard Form 1442.

f. Phase 1 Proposal Requirements and Submission Format. The proposals sought by this solicitation shall contain the categories of submittal information as follows:

(1) Offeror Past Performance Information. At the end of this paragraph is included the sample Past Performance Evaluation Questionnaire. The offeror shall identify the three in-progress or completed projects to be used for reference and evaluation purposes. Provide a questionnaire to the Point of Contact for each project listed for completion. When completed, these forms shall be mailed or faxed to the Norfolk District Contract Specialist identified in the sample transmittal letter provided. Failure of a reference verification to arrive at the Norfolk District within the identified time period shall adversely affect the overall rating received in Phase 1 of this project. It is the contractor's responsibility to ensure that the reference documentation is provided, the Government WILL NOT make additional requests for past performance information or references. Copies of the evaluation form SHALL NOT be provided to the Offeror from the reference. Projects from which questionnaires are received shall have been completed within three years of the date of the solicitation.

(2) Project Key Personnel. Provide the names, resumes, and levels of responsibility of the principal managers and technical personnel who will be directly responsible for the day-to-day design and construction activities. Include, as a minimum, the project manager; the project architect; the engineers responsible for civil, fire protection, electrical, mechanical and structural design; the quality control manager; and the construction manager. Indicate whether each individual has had a significant part in any of the project examples cited. If reassignment of personnel is considered likely, provide the names and resumes of the alternative professionals in each assignment. Project key personnel shall include the key construction subcontractors and the extent of their role with respect to the design phases of this project. Key subcontractors shall include, but are not limited to: Concrete, Electrical, Mechanical, and Site Development subcontractors.

(a) Information to be provided includes:

Name
Project assignment
Name of firm with which associated
Years experience: with this firm, with other firms
Education: degrees(s)/year/specialization
Active registration: state and year first registered (As applicable)
Experience and qualifications relevant to proposed project: for each project listed, provide project description, project dates, the individual's project assignment to include specific roles and responsibilities, and its relevance to this solicitation.

(b) Identify the Designer(s)-of-Record for each discipline

(c) Provide letters of commitment for all key personnel on the project team and any proposed alternate personnel. By identifying these personnel, the offeror is making a commitment that, barring unforeseen circumstances, they are the personnel who will be assigned to the project. A letter of commitment from each firm committing specific individuals from the firm may be provided in lieu of separate letters for each individual.

(3) Technical Approach Narrative. Describe in general terms how the Offeror will approach the design and construction of these facilities. The narrative should include considerations of "Fast Track" construction whereby preliminary site construction activities can begin prior to 100% completion of the design documents. The roles and responsibilities of the various sub-contractors for both design and construction shall also be addressed. Include in the narrative the offeror's proposed processes for handling field problems and assuring Designer of Record involvement throughout the construction period. Technical Approach Narrative shall be limited to a maximum of fifteen (15) typewritten pages.

(a). Provide an organizational chart and supporting narrative describing how the team will be structured. Include all key design and construction personnel and firms on the organizational chart. Discuss the specific roles and responsibilities of each key individual and firm.

(b). Describe the proposed management structure for the team. Discuss how the design and construction process will be managed, to include a discussion on delegation of authority within the team.

(c). Describe interactions within the team and with the Corps of Engineers during design. Discuss how design changes will be handled and the roles that various team members will play when dealing with design changes. Discuss the role of construction team members during design phase.

(d). Describe interactions within the team and with the Corps of Engineers during construction. Discuss how changes will be handled during construction and the roles that various team members will play when dealing with changes during construction. Discuss the role of design team members during construction. Specifically address design team's role in construction Quality Control program; RFI's; shop drawing/submittal review and approval; attending progress meetings; site visits; inspections; contract completion and closeout.

(e). Describe the time control systems to be utilized. Discuss the use of the project schedule for managing the design and construction. Describe internal procedures for handling delays to minimize time growth.

(f). Identify the items of work to be self-performed by offeror and the percentage of the overall contract value that this work represents.

(g). Describe the team's computer-aided drafting and design (CADD) capabilities. Identify the CADD software to be used in the design of this project; if all disciplines are not using the same CADD software,

identify the software that each discipline is using. Discuss compatibility with the Government's target CADD. Explain how compatibility will be achieved if the design, or portion of the design, is prepared using a CADD system other than the Government's target CADD system. (Refer to Section 01012 for information on the Governments target CADD system and compatibility requirements.)

(4) Offeror Relative Experience. Provide examples (at least three) of projects for which the offeror has been responsible. The examples should be as similar as possible to this solicitation in project type and scope. Similar facilities example projects are desirable and will receive additional consideration during the evaluations of the Phase I proposals. Example projects must have been completed not later than three years from the date of the solicitation.

(a) The list of projects shall include the following information:

a. Project name and location
b. Type of facility
c. Nature of firm's responsibility (design, construction or both)
d. Identify type of contract (design, design/build, or construction)
e. Project owner's name and address and project manager's (point of contact) name, telephone number, fax number, and email address (if known)
f. If a government contract, include the contracting agency and contracting officer's name, telephone number, fax number, and email address (if known)
g. Date started
h. Original scheduled completion date
i. Actual completion date
j. Overall size of facility (in square feet or square meters)
k. Construction cost (excluding design costs)
l. Duration of construction (excluding design time)
m. Problems encountered and corrective actions taken
n. Identify which proposed team members and/or firms were involved in the project; their specific roles and responsibilities on the project; and the extent of time they were involved with the project
o. Relevance of experience to the solicitation project

(b). Joint Ventures: If offeror represents the combining of two or more companies for the purpose of this RFP, the proposal shall indicate whether the firms have experience working together in design/build ventures and for how long and how many projects. In addition, each company of this joint venture shall list their Government contract experiences.

(5) No cost information shall be included in the Phase 1 proposal package.

SAMPLE TRANSMITTAL LETTER
AND
PAST PERFORMANCE EVALUATION QUESTIONNAIRE

Date: _____

To: _____
_____
_____

We have listed your firm as a reference for work we have performed for you as listed below. Our firm has submitted a proposal under a project advertised by the U.S. Army Corps of Engineers, Norfolk District. In accordance with Federal Acquisition Regulations (FAR), an evaluation of our firm's past performance will be completed by the Corps of Engineers. Your candid response to the attached questionnaire will assist the evaluation team in this process.

We understand that you have a busy schedule and your participation in this evaluation is greatly appreciated. Please complete the enclosed questionnaire as thoroughly as possible. Space is provided for comments. Understand that while the responses to this questionnaire may be released to the offeror, FAR 15.306 (e)(4) prohibits the release of the names of the persons providing the responses. Complete confidentiality will be maintained. Furthermore, a questionnaire has also been sent to _____ of your organization. Only one response from each office is required. If at all possible, we suggest that you individually answer this questionnaire and then coordinate your responses with that of _____, to forge a consensus on one overall response from your organization.

Please send your completed questionnaire to the following address not later than December 5, 2003:

U.S. Army Engineer District, Norfolk
ATTN: Ms. Debora Gray
803 Front Street
Norfolk VA 23510-1096

The questionnaires can also be faxed to Ms. Gray at (757) 441-7078
If you have questions regarding the attached questionnaire, or require assistance, please contact Ms. Gray at (757) 441-7551. Thank you for your assistance.

PAST PERFORMANCE EVALUATION QUESTIONNAIRE

Upon completion of this form, please send directly to the U.S. Army Corps of Engineers in the enclosed addressed envelope or fax to the Norfolk District, ATTN: Debora Gray. Do not return this form to our offices. Thank you.

1. Contractor/Name & Address (City and State):

2. Type of Contract: Fixed Price _____ Cost Reimbursement _____
Other (Specify) _____

3. Title of Project/Contract Number:
_____
_____
_____

4. Description of Work: (Attach additional pages as necessary)

5. Complexity of Work: High _____ Mid _____ Routine _____

6. Location of Work:_____

7. Date of Award: _____

8. Status: Active _____ (provide percent complete)
Complete _____ (provide completion date)

9. Name, address and telephone number of Contracting Officer's Technical Representative:

QUALITY OF PRODUCT/SERVICE:

10. Evaluate the contractor's performance in complying with contract requirements, quality achieved and overall technical expertise demonstrated.

Excellent Quality	
Above Average Quality	
Average Quality	
Below Average Quality	
Unsuccessful or Experienced Significant Quality Problems	

Remarks:
_____
_____
_____
_____

11. To what extent were the contractor's reports and documentation accurate, complete and submitted in a timely manner?

Excellent Quality	
Above Average Quality	
Average Quality	
Below Average Quality	
Unsuccessful or Experienced Significant Quality Problems	

Remarks: _____
_____
_____
_____

12. To what extent was the contractor able to solve contract performance problems without extensive guidance from government/owner counterparts?

Excellent	
Above Average	
Average	
Below Average	
Unsuccessful	

Remarks:

_____
_____
_____
_____

13. How well did the contractor manage and coordinate subcontractors, suppliers, and the labor force?

Excellent	
Above Average	
Average	
Below Average	
Unsuccessful	

Remarks:

_____
_____
_____

CUSTOMER SATISFACTION:

14. To what extent were the end users satisfied with:

	Quality?	Cost?	Schedule?
Exceptionally Satisfied			
Highly Satisfied			
Satisfied			
Somewhat Dissatisfied			
Highly Dissatisfied			

Remarks:
_____
_____
_____
_____

15. If given the opportunity, would you work with this contractor again?

Yes _____ No _____ Not Sure _____

TIMELINESS OF PERFORMANCE:

16. To what extent did the contractor meet the task order schedules?

Completed Substantially Ahead of Schedule	
Completed on Schedule with no Time Delays	
Completed on Schedule with Minor Delays Under Extenuating Circumstances	
Experienced Significant Delays without Justification	

Remarks: _____
_____
_____
_____

REUSE OF CONTRACTOR:

17. Would this contractor be considered favorably for additional work?

Without reservations – yes	
With reservations – yes	
Possibly	
Definitely Not	

Remarks: _____
_____
_____

OTHER REMARKS:

18. Use the space below to provide other information related to the contractor's performance. This may include the contractor's selection and management of subcontractors, flexibility in dealing with contract challenges, their overall concern for the Government's interest (if applicable), project awards received, etc.

_____
_____
_____
_____
_____
_____
_____
_____

3.00 PHASE 2 PROPOSAL SUBMISSION INSTRUCTIONS

a. Who May Submit.

(1) Proposals may be submitted by the offerors who receive written notification from the Norfolk District Contracting Officer that their firm has been selected to participate in Phase 2 of this solicitation. No more than five offerors will compete in Phase 2 under typical circumstances. If more than five (5) offerors are involved in Phase 2 of this solicitation, each offeror will be informed of the total number of offerors invited to participate. No offeror identifications will be made without the written consent of all the offerors to release that information.

b. General Requirements.

(1) In order to effectively and equitably evaluate all proposals, the Contracting Officer must receive information sufficiently detailed to clearly indicate the materials, equipment, methods, functions, and schedules proposed.

(2) In addition to the design documents addressed below, proposals must contain financial terms, management information, schedules for design and construction, and the representations and certifications. Specific requirements are described below.

(3) Title Page, including the title of the solicitation, solicitation number, name, and date of the submittal.

(4) The proposals shall contain a detailed table of contents. If more than one binder is used, the complete table of contents shall be included in each. Any materials submitted but not required by this solicitation, (such as company brochures), shall be relegated to appendices.

(5) Compliance Statement: The offeror is required to certify that all items submitted in the technical proposal comply with the RFP requirements and any differences, deviations or exceptions must be stated and explained. Offerors are required to complete the following statement and submit it with their technical proposal. Even if there are no differences, deviations or exceptions, the offeror must submit the Compliance Statement and state that none exist.

<u>Statement of Compliance:</u>

This proposer hereby certifies that all items submitted in this proposal and final design documents (after contract award) comply with the solicitation requirements. The criteria specified in Solicitation No. W91236-04-R-0003 are binding contract criteria and in case of any conflict after award, between Solicitation No. W91236-04-R-0003 and the contractor's proposal, the solicitation criteria shall govern unless there is a written and signed agreement between the contractor and the Government waiving a specific requirement. Should this proposal result in the award of a contract, this statement will be included on each sheet of drawings and on the cover of the specifications.

c. Exceptions to the contractual terms and conditions of the solicitation (e.g., standard company terms and conditions) must not be included in the proposal.

d. The technical proposal shall not include any cost information. The technical and cost proposals shall be submitted as two separate documents.

e. Size of Printed Matter Submissions.

(1) Written materials: Size A4 [or 8-1/2" x 11"] format.

(2) Drawing sheets: Use [approximately 24" x 36"] for full size drawings. Half size sheets [approximately 11" x 17"] are also acceptable.

f. Where to Submit. Offerors shall submit their proposal packages to the Norfolk District at the address indicated.

g. Submission Deadline. Proposals shall be received by the Norfolk District no later than the time and date specified.

h. Proposal Requirements and Submission Format. The proposals sought by this solicitation shall contain the categories of submittal information as follows:

(1) Pro Forma requirements. This information should be submitted in an envelope labeled "Pro Forma Requirements." This category consists of representations and certifications, subcontracting plan, proposal bonds, and completed Standard Form 1442. Provide original and one (1) copy.

(2) Price Proposal Information. Offeror shall complete all portions of the Price Proposal Schedule and furnish in a separate envelope in original and two copies.

(a). Subcontracting Plan. (Applies to Large Businesses only.) All large businesses shall submit a subcontracting plan with their technical and price/cost proposals. The plan should be prepared in accordance with FAR 52.219-9. Failure to submit an acceptable subcontracting plan may make the offeror ineligible for award of the contract. The submission of the subcontracting plan is in no way advantageous to large businesses over any small business in the evaluation process. See Section 00100, paragraph SMALL BUSINESS SUBCONTRACTING PLAN for additional information and Norfolk District subcontracting goals.

(b). Small Disadvantaged Business (SDB) Utilization Plan. (Applies to all Offerors.) Offerors shall submit a SDB Utilization Plan, to include the following information:

a. Identification of each SDB concern proposed and the work each is to perform.

b. Targets expressed in dollars and percentages representing each SDB concern's participation of the total contract value.

c. Total target value of all SDB participation, expressed in dollars and percentages, of the total contract value.

The offeror is put on notice that any targets represented in submitted proposal will be incorporated into and become part of any resulting contract. All proposed SDB concerns must be certified by the Small Business Administration and listed in the online database PRO-Net. SDB concerns may register in PRO-Net at http://pronet.sba.gov.

(3) Design-Technical Information. This information shall be submitted in separate three-ring binders labeled "Design-Technical Information." This category consists of design documents, drawings, sketches, outline specifications, design analysis, catalog cuts, and other information. Provide four (4) full size copies of the drawings; or one (1) full size copy of the drawings with four (4) copies of half size drawings; and four (4) copies of catalog cuts and other technical data. The drawings shall be bound.

(a). Design analyses expected at the proposal stage should be narrative descriptions of the systems and methods chosen including rationale for those selections. Design calculations necessary to support a final design submission are not expected nor desired at this stage.

(4) Project Management Plans and Schedules. The offeror shall provide a Management Plan, four copies are required. This is an overall plan showing how the offeror will control the job. The term "management plan" is defined as a plan that includes the following subplans: Subcontracting Plan, Quality Control Plan; integrated Design and Construction Schedule with all "Fast Tracking" areas clearly identified, and Contract Closeout Plan. The offeror shall also submit a rationale explaining how the schedules will be achieved. The schedule for design and construction shall be task oriented, indicating

dates by which milestones are to be achieved. The offeror may use a critical path or other method of his/her choice; however, the schedules shall be graphically represented.

A Closeout Plan shall be furnished in a brief structured time scale schedule reflecting the planned activities during the final 90 days of the contract activity. Items to be included are as follows:

CLOSEOUT PLAN

Testing of equipment and systems with schedules and reports.
Equipment instruction and training schedules.
O&M Manuals transfer.
As-built drawings transfer.
Transfer procedures and schedules.
Pre-final inspection procedures and correction of deficiencies.
Warranty data submission and planned implementation.
Cleanup of administrative deficiencies.
Move off site.

(a) Sample Quality Control Plan. The Quality Control Plan is part of the Management Plan. The alliance of the project designer and builder on a project such as this naturally removes one commonly used method of quality control; that is, the usual reliance on the owner or the design consultant for monitoring construction quality. Although the Government will provide an on-site representative during construction, offerors are expected to develop a formal program of monitoring to ensure a high level of construction quality. Offerors shall submit Quality Control Plans that respond to the minimum requirements of Technical Specifications Section 01451 (furnished with this RFP package) entitled "Contractor Quality Control Design/Build." The offeror's program shall include the following characteristics:

CONTRACTOR QUALITY CONTROL REQUIREMENTS

A clear identification of the personnel responsible for quality control and a clear policy establishing their authority. The quality control group shall be separate and apart from (not the same) the people that are doing the construction. This quality control group shall report to the Contractor's management at a level no lower than a vice president of the company.
A specific description of the tasks and functions of the quality control personnel.
A specific policy establishing schedules for the performance of quality control tasks.
A policy for reporting quality control findings to the Contracting Officer.
A procedure whereby the Contracting Officer may resolve disputes that have not received satisfactory responses from the first levels of quality control personnel.
The names of testing laboratories to be used and the procedures for test data reporting.
A plan for material storage and protection.

CONTRACTOR QUALITY CONTROL REQUIREMENTS

The plan for review, evaluation, and Offeror Quality Control of the Design Submittals prior to Government receipt.
The plan for review of submittals and extensions of design. Of particular interest is the role of the Designer of Record in all design and construction progress.
Procedures for involving Key Subcontractors in the design development.
Procedures for successful integration of the Offeror's Quality Control Program with the Government's Quality Assurance Program.

i. Technical Data Requirements for Proposals. The following technical data shall be submitted as part of the formal Design-Technical Information Phase 2 proposal. Proposals shall include graphic descriptions of the design included in the basic proposal clearly indicated as such. All alternate designs shall be graphically described on separate drawings from the basic proposal. Offerors are advised that the required data listed below will be utilized for technical review and evaluation and used for determination of a "Quality Rating" by a Technical Evaluation Team. Materials indicated in the design/construction criteria, but not indicated in the offeror's specifications, will be assumed to be included and a part of the proposal.

(1) Design drawings. Provide an index of drawings. Do not provide foundation plans or , plumbing, mechanical, or electrical details. The proposal design drawings shall provide the information as indicated in the following tables:

SITE DESIGN

Drawing Type / Scale	Show This Information
Area Site Development Plan scale: 1 INCH = 30 FT	Spatial and functional arrangement of all SOW exterior ATFP & security requirements Project Boundaries Building Footprints Vehicular and pedestrian circulation Perimeter Fencing and Access Points Dumpster Areas Vehicle Fueling Station Fuel storage tank locations (include buried tanks) New and existing stone walls Retaing walls Bollards (decorative and mechanical "pop-up" type) Site Lighting Crash Barriers Equipment pads (Chillers, Transformers, all exterior mounted equipment) Cameras and pass card readers

Details (scale as suited)	New and existing stone walls Retaing walls Bollards Crash Barriers Materials

BUILDING DESIGN

Drawing Type / Scale	Show This Information
Floor Plans 1/8”=1’-0”	Overall dimensions. Room description with dimensions and areas. Appliances Plumbing fixtures and Vanities Door swings. Garage Features Service areas (Trash areas) HVAC and hot water heater location
Building Elevations 1/8”=1’-0”	Show all Sides Materials
Typical Wall Sections ¾”=1’-0”	Typical wall, foundation, floor, and roof section. Materials.
Details Scale as required.	Special Features Materials
Finish Schedule	All rooms.

(2) Specifications. Provide outline specifications indicating the quality of materials, construction, finishes, fixtures, and equipment for the applicable items. Special attention should be given to the identification and specification of energy conservation features included in the proposal, particularly those which exceed the minimum requirements of the Statement of Work. Submit as part of the Design-Technical Information.

(a) Mechanical Systems: Provide a narrative description of the mechanical systems proposed for - installation in the new facilities. Description shall include zoning, functionality, applicability to the functions performed in the various spaces. Include equipment efficiencies and energy conservation features included in the proposed designs. Define considerations for locating the intake and exhaust systems on the facilities to avoid reintroduction of exhausted air.

(b) Electrical Systems: Provide a narrative description the electrical systems proposed for the facility in terms of building service, internal distribution, capability for expansion/future loads, fixtures selected, and other associated electrical power, communications, and lighting considerations.

(3) Equipment Schedule. Equipment schedule shall indicate proposed type of equipment, size or capacities, manufacturer, and model number. Furnish manufacturer's catalog data on equipment and fixtures for all features of the facilities, this shall include furniture, overhead doors, electrical equipment and lighting, ATFP and security equipment, mechanical heating and cooling equipment, domestic water system equipment, as well as catalog information on the finishes and architectural specialties and exterior finish materials. Originals of manufacturer's catalog should be submitted in lieu of reproducible to ensure legible data. Submit as part of the Design-Technical Information.

(4) Color Boards. Coordinated interior and exterior color schemes. For proposal evaluation provide one copy of the scheme complete with samples and/or chips of the colors, materials, textures, and finishes.

(5) Life Safety Analysis and Fire Protection Analysis. The proposal shall include a Life Safety Analysis and Fire Protection Analysis that clearly demonstrates that proposal meets or exceeds all the Life Safety and Fire Protection requirements of the Statement of Work, which includes any special requirements, the National Fire Codes published by the National Fire Protection Association, and the New York State Building Code.

(6) Evaluation Factors/Proposal Contents Listing. A spreadsheet or table consisting of all the evaluation categories and sub-categories listed in Section 0120 for technical proposal evaluation and specific reference to where in the proposal documents those requirements are addressed or indicated. Submit as part of the Design-Technical Information.

4.0 RESTRICTIONS

a. Incomplete proposals. Failure to submit all the data indicated in this section may be cause for determining a proposal incomplete and, therefore, not considered for technical evaluation in Phase 2, or for subsequent award.

b. Project Proposal Periods. Contractor proposal preparation periods are limited in this solicitation. Contractors shall take into consideration the limited time available for proposal preparation in developing their responses to this solicitation.

Phase I Proposal Preparation Time is approximately 30 days

Phase II Proposal Preparation Time is approximately 45 days

SECTION 00120
PROPOSAL EVALUATION AND CONTRACT AWARD

SECTION 00120
PROPOSAL EVALUATION AND CONTRACT AWARD

1. TECHNICAL EVALUATION.

a. PHASE 1 Evaluation Factors:

FACTOR 1-1: OFFEROR PAST PERFORMANCE: This factor is the most important factor in the evaluation or Phase 1 proposals.

FACTOR 1-2: OFFEROR PROJECT KEY PERSONNEL: This factor is slightly less important than Factor 1-1 but represents a significant level of importance in evaluating proposals.

FACTOR 1-3: TECHNICAL APPROACH NARRATIVE: This factor is equal in importance to Factor 1-2.

FACTOR 1-4: OFFEROR RELEVANT EXPERIENCE: This factor is less important than Factor 1-2.

b. PHASE 2 Evaluation Factors:

FACTOR 2-1: FACILITY DESIGN AND EQUIPMENT: This factor is the most important factor in the evaluation of Phase 2 proposals.

FACTOR 2-2: FACILITY ENGINEERING: This factor is slightly less important than Factor 2-1.

FACTOR 2-3: SITE DESIGN AND ENGINEERING: This factor is slightly less important than Factor 2-2.

FACTOR 2-4: OFFEROR MANAGEMENT PLANS AND SCHEDULES: This factor is less important than Factor 2-3.

c. Overall Proposal Evaluation Consideration

At the completion of both Phase 1 and Phase 2 evaluations the ratings from each of the phases will be tabulated. The Phase 2 evaluation is significantly more important in final selection than the results of the Phase 1 evaluation. At the completion of the evaluation process each proposal that completed both phases of the evaluation process will be assigned a single adjectival rating for comparison and best value analysis as applicable.

2. EVALUATION PROCESS

The proposal and evaluation process for this project will take place in two Phases. Each phase will inlcude unique requirements to the potential offerors. The offerors responses to these requirements will be evaluated with respect to the evaluation criteria set forth in this Section.

a. PHASE 1 will concern itself with Offeror's Past Performance, Proposed Project Key Personnel, and Offeror Relevant Experience. All proposals received in response to PHASE 1 will be evaluated and rated. At most, five (5) proposals will move forward into PHASE 2 which will define the technical requirements of the project and request the offeror's technical solutions to the project parameters.

b. PHASE 2: The five (at most) proposals which are determined to present the most advantages to the Government will receive the Phase 2 amendment to the solicitation which will include the Statement of Work, design considerations, and site constraints from the Government. These Offerors will review, evaluate, and propose a creative solution to the design problem presented. Offerors will also include cost information with this technical proposal. Only Offerors who reach PHASE 2 will be provided the opportunity to submit design solutions and cost information.

3. BASIS OF AWARD

a. The Government will award a firm fixed-price contract to that responsible Offeror whose complete (Phase 1 and 2 portions) proposal, which was evaluated to be at least conforming to the solicitation, determined to be fair and reasonable, and has been selected as the most advantageous to the Government, quality (comprised of technical approach and performance capability factors), price, and other factors considered. The rated evaluation criteria and price are considered approximately equal. As evaluation ratings and relative advantages and disadvantages become less distinct, differences in price between proposals are of increased importance in determining the most advantageous proposal. Conversely, as differences in price become less distinct, differences in ratings and relative advantages and disadvantages between proposals are of increased importance to the determination.

b. The Government reserves the right to accept other than the lowest priced offer. The right is also reserved to reject any and all offers. The basis of award will be a conforming offer, the price or cost of which may or may not be the lowest. If other than the lowest priced offer is accepted, that offer must be sufficiently more advantageous than the lowest priced offer in order to justify the payment of additional amounts.

c. Offerors are reminded to include their best technical and price terms in their initial offer and not to automatically assume that they will have an opportunity to participate in discussions or be asked to submit a revised offer. The Government may make award of a conforming proposal without discussions, if deemed to be within the best interests of the Government.

4. PHASE 1 EVALUATION PROCEDURES AND CRITERIA:

a. All proposal information received as a result of the Phase 1 solicitation shall be reviewed, evaluated, and rated with respect to the following rating scheme:

RATING	EXPLANATION
Unknown Performance Risk	Past performance information provided does not provide sufficient depth and breadth of experience to allow a definitive rating.
Outstanding/Very Low Performance Risk	Based on the offeror's performance record, no doubt exists that the offeror will successfully perform the required effort.
Above Average/Low Performance Risk	Based on the offeror's performance record, little doubt exists that the offeror will successfully perform the required effort.
Satisfactory/Moderate Performance Risk	Based on the offeror's performance record, some doubt exists that the offeror will successfully perform the required effort. Normal contractor emphasis should preclude any problems.
Marginal/High Performance Risk	Based on the offeror's performance record, substantial doubt exists that the offeror will successfully perform the required effort.

Unsatisfactory/Very High Performance Risk	Based on the offeror's performance record, extreme doubt exists that the offeror will successfully perform the required effort.

b. Offeror Past Performance: The Government will evaluate the satisfaction of the customers in the example projects identified by the Offeror and from which Past Performance Evaluation Questionnaires have been received. The Government may contact the points of contact indicated to assure validity of the received questionnaires. The Government may contact sources other than those provided by the Offeror for information with respect to past performance. These other sources may include ACASS (Architect-Engineer Contract Administration Support System), CCASS (Construction Contractor Appraisal Support System), telephone interviews, and Government personnel personal knowledge of contractor performance capability. Offerors will be provided with an opportunity to address any negative past performance information on which the offeror has not previously had such an opportunity. The following areas of major consideration will be determined from evaluation of all sources of past performance information and an overall rating provided:

(1) Quality of the Product Produced. Based on the information provided in the questionnaire and other information the Government will access the quality of the actual constructions produced and the standards of workmanship exhibited by the Offeror's team.

(2) Adherence to Project Schedule. The Government will evaluate all information available with respect to the Offerors completing past projects within the scheduled completion times.

(3) Management Processes. The Government will evaluate all information available with respect to the Offerors on-site management of construction activities, subcontractors, and any other project management consideration.

c. Offeror Project Key Personnel. The Government will evaluate and rate the Key Personnel identified in the Phase 1 proposal package. Additional consideration will be given to individuals who have past experience with Corps of Engineers construction project operations and construction phase personnel who have completed the Corps sponsored Quality Control Class.

(1) The Government will evaluate the adequacy, strengths and weakness of key personnel assignments, to include compliance with registration and/or other specified minimum qualification requirements; qualifications and experience relevant to the proposed project; familiarity with local conditions; and familiarity with applicable building codes and standards.

(2) The Government will verify that the Designer of Record has been identified for each design discipline and that letters of commitment have been provided for all key personnel on the project team.

(3) The Government will evaluate the personnel resources assigned to the project and the ability to provide additional resources for the team if supplemental or replacement personnel are required. Consideration will be based on degree of coverage by discipline for all aspects of design and construction, depth of additional resources to supplement the planned resources, if necessary; whether same-discipline depth is from the same firm/office as the key personnel in that discipline or from a different firm or office.

d. Technical Approach Narrative. The Government will evaluate the overall understanding of the design-build process as well as the Offeror's implementation plans to utilize "fast track" procedures on this project. Particular attention will be paid to the inclusion of the major construction subcontractors during the design process as well as the definition of the roles and responsibilities of the various subcontractors. Offerors are cautioned that this narrative shall not exceed fifteen (15) pages and that the Government review staff will review and evaluate only the information contained on the first fifteen pages in this section. Information beyond the fifteen (15) page limit will be ignored.

e. Relevant Experience. The Government will evaluate the example projects provided by the Offeror to evaluate and rate the recent experience of the Offeror in similar construction and/or design-build projects. The examples projects which most closely resemble the project identified in this solicitation will receive the highest consideration. Lack of relevant experience will not be rated favorably or unfavorably.

f. Evaluation Methodology. The Government evaluation team will each consider all information provided in the Phase 1 proposals. Once these individual analyses are completed, the team will meet and determine a rating for each of the evaluation factors for Phase 1 by consensus decision. After each of the Factors for each of the proposals are rated, the team will develop, again by consensus, a final overall rating for the Phase 1 proposal. Up to five Offerors will continue into Phase 2 of the project. No proposals which receive an overall rating of Unsatisfactory or Marginal will be forwarded to Phase 2 regardless of the total number of proposals received.

g. Narrative Consensus Comments: The consensus evaluation will identify and document proposal Deficiencies, Strengths, Weaknesses, and Uncertainties.

Definitions:

Proposal Deficiency: A material failure of a proposal to meet a Government requirement or a combination of significant weaknesses in a proposal that increases the risk of unsuccessful contract performance to an unacceptable level. Examples of deficiencies include statements by the offeror that it cannot or will not meet a requirement; an approach that clearly does not met a requirement, or an omission of significant data required to assess compliance with a Government requirement.

Proposal Strength: An aspect of a proposal that appreciably decreases the risk of unsuccessful contract performance or that represents a significant benefit to the Government.

Proposal Weakness: A flaw in the proposal that increases the risk of unsuccessful contract performance. A “significant weakness” in the proposal is a flaw that appreciably increases the risk of unsuccessful performance.

Uncertainty: Any aspect of the proposal for which the intent of the offeror is unclear because there may be more than one way to interpret the offer or because inconsistencies in the offer indicate that there may be an error, omission, or mistake. Examples include a mistake in calculation or measurement and contradictory statements.

5. PHASE 2 EVALUATION PROCEDURES AND CRITERIA:

a. General. The proposals from the Offerors who reach Phase 2 will be evaluated by a team of Government staff to determine compliance with this solicitation (as a minimum), and to evaluate the quality of the proposed materials, methods, and procedures. Each of the evaluation Factors for Phase 2 will be evaluated by the Government and a final overall rating for the proposals shall be determined by consensus of the Government evaluation team. The rating scheme for Phase 2 of the process is as shown below:

<u>OUTSTANDING:</u> The offeror greatly exceeds the scope of the solicitation requirements in all aspects of the particular factor or sub-factor. The offeror also provides significant advantage(s) and exceeds the solicitation requirements in performance or capability in an advantageous way and has no apparent or significant weaknesses or omissions.

<u>ABOVE AVERAGE:</u> The offeror exceeds the scope of the solicitation in most aspects of the particular factor or sub-factor. The offeror provides an advantage in key areas or exceeds performance or capability requirements, but has some areas of improvement remaining.

SATISFACTORY: The offeror matches the scope of the solicitation in most aspects of the particular factor or sub-factor. The offeror meets the performance or capability requirements of the element but not in a way advantageous to the Government. There is room for improvement in this element.

MARGINAL: The offeror does not meet the minimum scope of the solicitation for the particular factor or sub-factor. The offeror does not include any advantages and does not meet the minimal performance or capability requirements for this element. The offeror contains many apparent weakness and requires improvement.

UNSATISFACTORY: The offeror fails to meet the scope of the solicitation in all aspects of the factor or sub-factor or has not submitted any information to address this evaluated item. The offeror does not include any advantages in any areas of the element and does not meet the minimum performance or capability requirements of this factor or sub-factor. The proposal includes large apparent weaknesses and the proposal will require extensive modifications to come into compliance with the minimum requirements of the solicitation.

b. Relative Importance of Factors. Refer to paragraph 1 in this section for delineation of factor relative importances.

c. Narrative Consensus Comments: The consensus evaluation will identify and document proposal Deficiencies, Strengths, Weaknesses, and Uncertainties.

Definitions:

Proposal Deficiency: A material failure of a proposal to meet a Government requirement or a combination of significant weaknesses in a proposal that increases the risk of unsuccessful contract performance to an unacceptable level. Examples of deficiencies include statements by the offeror that it cannot or will not meet a requirement; an approach that clearly does not met a requirement, or an omission of significant data required to assess compliance with a Government requirement.

Proposal Strength: An aspect of a proposal that appreciably decreases the risk of unsuccessful contract performance or that represents a significant benefit to the Government.

Proposal Weakness: A flaw in the proposal that increases the risk of unsuccessful contract performance. A “significant weakness” in the proposal is a flaw that appreciably increases the risk of unsuccessful performance.

Uncertainty: Any aspect of the proposal for which the intent of the offeror is unclear because there may be more than one way to interpret the offer or because inconsistencies in the offer indicate that there may be an error, omission, or mistake. Examples include a mistake in calculation or measurement and contradictory statements.

FACTOR 2-1: FACILITY DESIGN AND EQUIPMENT.

Facility design includes the function and appearance of administrative facilities materials, and the "appeal" of the overall facility taking into account both interior as well as exterior considerations. Subfactors and elements described herein deal with the planning and design of the facilities, as well as the durability of the materials, exclusive of the purely technical performance of internal engineering systems. The subfactors described below will be evaluated in the following order of importance:

Subfactor a is "GO/NO GO" factor and will be rated as pass/fail without an adjectival component.
Subfactor b, c, & d are equal.

a. APPROPRIATE FACILITIES

From an overall perspective, has the proposal included all the required facilities as described in the Statement of Work? Changes to the Floor plans and Elevations are not desired. Although, slight modifications are acceptable for structural and system requirements, significant departures from the Floor Plans and Elevations will result in a ***Fail*** rating.

b. QUALITY OF CONSTRUCTION MATERIALS

This subfactor evaluates the quality of the materials proposed for installation in the facility. The facility constructed under this solicitation will represent a significant asset and as such is expected to have a long effective life span. Consider the quality of materials used in wall construction, doors, windows and the roof for evaluation purposes. Particular emphasis should be placed on durability, corrosion resistance, pest resistance, ease of maintenance, and life cycle cost of maintenance requirements. Offerors are encouraged to highlight the innovative and specific means proposed to address these considerations.

c. QUALITY OF FURNITURE & EQUIPMENT

This subfactor evaluates the quality of the furniture and built-in equipment proposed for installation in the facility. These systems include fuel pumps, piping trenches, communications, security, detention controls, and other equipment included with the facility that directly supports the mission of the facility. Furniture includes units installed in the muster room, waiting areas, office, as well as multi-purpose and conference rooms. Evaluate storage lockers, work tables, and seating. Consideration will be given to operating and maintenance requirements, durability, and serviceability of the proposed furniture and equipment. The materials proposed must be suited for heavy long term usage.

d. INTERIOR APPEARANCE & COLOR SCHEDULE

The design solution included in the solicitation presents a minimum level of quality and appearance for the interior of the facility and the interior finishes to be provided. For proposals that reflect the design solution included in the solicitation a rating of "Average" shall be provided for this sub-factor. For proposals that include betterments or enhancements, the interior finish quality, durability, maintainability, and aesthetics for each of the following will be evaluated:

(1) Walls and Ceilings
(2) Flooring
(3) Shelving, wainscots and moldings.
(4) Casework.

FACTOR 2-2: FACILITY ENGINEERING.

This factor considers the materials, layout, maintainability, quality, durability, maintenance considerations, and any aspects of the proposed building systems and materials. Additional consideration will be given to proposed systems or materials which include betterments or which exceed the minimum requirements of the Statement of Work. Offerors are encouraged to present energy, maintenance, and life cycle cost improvements which will lead to the overall improvement in the final facilities constructed. The following subfactors shall be considered in evaluation this factor. The levels of importance are as follows:

Subfactor a, b, and c are the most important subfactors and are equal in weight.
Subfactor d, e, f, g, & h are of equal and each slightly less important than subfactor a.

a. Building Interior Electrical Systems. This subfactor evaluates the electrical power and lighting systems proposed for installation. Evaluation will concentrate on the design approach narratives, and the equipment and material catalog information included in the proposals. The systems proposed must meet the minimum requirements set forth in the Statement of Work and shall represent systems which are fully integrated into the building structure. Additional consideration will be given to proposals which incorporate energy saving materials into the proposals or materials which represent a lower life cycle cost to the Installation. The following typical items will be evaluated:

Panel and Equipment Placement	Emergency Power Generator
Simplicity of Power Design	Lighting Design and Materials
Special Equipment Power Requirements	Dedicated Circuits/Special Usages

b. Building Heating, Ventilating, and Air Conditioning Systems. This subfactor evaluates the heating, air conditioning, and ventilating systems proposed for installation. Evaluation will concentrate on the design approach narratives, and the equipment and material catalog information included in the proposals. The systems proposed must meet the minimum requirements set forth in the Statement of Work and shall represent systems which are fully integrated into the building structure and are fully capable of environmental control of the spaces. Within this subfactor, the automatic temperature controls shall also be considered. Additional considerations will be given to proposals which incorporate energy recovery systems, high efficiency systems, energy conservation considerations, thermal storage systems, and other systems and features designed to enhance the overall performance of the facility while reducing the operating and maintenance costs expected. The following typical items will be evaluated:

Maintenance Access Considerations	Noise Considerations
Quality of Materials Proposed	Special Ventilation Systems
Ventilation Air for Occupant Comfort	Durability of Proposed Equipment/Systems

c. Building Force Protection Considerations. This subfactor evaluates the implementation and considerations of the facility construction related Force Protection Requirements associated with the building evelope, contents, and interior spaces. Enhancement or betterments included with the proposals must not compromise the force protection requirements of this solicitation.

d. Fire Protection and Fire Alarm Systems. This subfactor evaluates the proposed fire protection and fire alarm system, including the connection of the proposed fire alarm system to the anticipated base-wide fire reporting system which is to be monitored by the fire department. Included in this subfactor is the design as well as the materials proposed for installation. Fire protection and fire alarm systems are key systems and must be adequately addressed in the proposal.

e. Building Thermal Performance. This subfactor evaluates the overall thermal performance of the building structure and includes walls, windows, doors, infiltration, perimeter insulation, and any heat transferring surface within the new constructions. The Statement of Work provides a minimum level of prescriptive requirements which must be included in the proposal. Offerors will receive additional

consideration for thermal performance which exceeds the minimum requirements and which reduce the overall energy usage of the facilities.

f. Communications and Telephone Systems. This subfactor evaluates the provision of communications and telephone systems in the facility as well as the materials proposed for installation.

g. Plumbing Systems. This subfactor evaluates the provision of plumbing systems in the facility as well as the materials proposed for installation.

h. Building Structural Systems. This subfactor evaluates the structural systems and sub-systems proposed for installation in the facilities. While no detail drawings or calculations are required or desired, this subfactor will evaluate the narrative descriptions of the structural systems proposed.

FACTOR 2-3: SITE DESIGN AND ENGINEERING.

This factor considers the overall planning, layout, design and development of the site and the various specialties that comprise a good site development plan (subfactor a). All elements of site design will be considered in this factor. Site engineering includes the technical performance of the site design and exterior utility systems (subfactors b-e). The quality of the proposed construction materials should be considered paramount for evaluation of each element. Particular emphasis should be placed on durability, corrosion resistance, pest resistance, ease of maintenance, and life cycle cost of maintenance requirements. Consideration will be given to the suitability of the chosen material to the environment in which it is to be placed. The following subfactors shall be considered in evaluation this factor. Utility elements are to be evaluated beyond the 5-ft line from the facilities. The following subfactors shall be considered in this evaluation factor. The levels of importance are as follows:

Subfactor a is considered the most important subfactor.
Subfactor b is slightly less important than subfactor a.
Subfactor c, d, & e are of equal importance and each less important than subfactor b.

a. Site Force Protection Considerations. This subfactor evaluates the implementation and considerations of the facility construction related Force Protection Requirements associated with the exterior of the facility, site layout, and perimeter protection. Enhancement or betterments included with the proposals must not compromise the force protection requirements of this solicitation.

b. Water system. Evaluate system, material quality, and maintainability.

c. Fuel piping and Storage Systems. Evaluate piping sizes, material quality, accessibility, and cutoff isolation.

d. Electrical Distribution. Evaluates system, material quality, and maintainability.

e. Sanitary Sewer System. Evaluates system, material quality, and maintainability.

FACTOR 2-4: OFFEROR MANAGEMENT PLANS AND SCHEDULES.

This factor evaluates the Offeror's Project Management Plans as well as the proposed schedule for completion of the entire design-build project. Through this factor the Government will evaluate the Offeror's understanding of the solicitation provisions with respect to an integrated design-build process and the associated quality control, scheduling, coordination, and contract close out provisions. Each of the subfactors below is approximately equal in importance in the evaluation.

a. Quality Control Plan. The sample quality control plan provided by the Offeror will be reviewed and evaluated for inclusion of specific quality control practices and requirements necessary for the successful completion of all phases of this project. These phases include design stages as well as construction specialties. Offeror's plan must show the inclusion of the Corps Three Phase Inspection process and address the implications and operations of the Quality Control Plan and it's integration with the Quality Assurance Operations performed by the Government. The personnel and qualifications of the individuals performing in the Quality Control organization will be evaluated under the Phase 1 submission, however, if personnel changes have occurred since the Phase 1 submittal, these individuals must be evaluated as part of the Phase 2 evaluation process.

b. Schedule Information. The proposed schedule will be evaluated to assess the inclusion of "fast tracking" and the rational of how the Offeror intends to comply with the submitted schedule. The schedule must reflect a single task oriented structure for both design and construction. The schedule will be reviewed for completeness and the inclusion of required milestones. A schedule which improves on the Government supplied maximum duration will be considered more favorably during the evaluation.

c. Closeout Plan. The Offeror's closeout plan will be reviewed and evaluated to determine the Offeror's understanding the close out requirements of the solicitation. Particular emphasis will be placed on O&M Manual production and Installation Staff training methods and processes.

d. Sub-Contracting Plan. The Government will evaluate the Offeror's proposed subcontracting plan will be evaluated in terms of achieving the required special emphasis group participations and the completeness and rational for the plan proposed. Offerors who are not required to submit a subcontracting plan (ie Small Business concerns) will be assigned a rating equal to the highest evaluation of any subcontracting plan submitted in response to this solicitation.

SECTION 00800

SPECIAL CONTRACT REQUIREMENTS

(NYD rev 6/03)

1. COMMENCEMENT, PROSECUTION AND COMPLETION OF WORK:

(1). The Contractor shall be required to (a.) commence work under this contract within 5 calendar days after the date the Contractor receives the notice to proceed, (b.) prosecute the work diligently, and (c.) complete the entire work ready for use not later than **548** calendar days after the date the Contractor receives the notice to proceed, except in case the Contracting Officer determines that seeding is not feasible during the construction period, the Contractor shall accomplish such seeding in the first planting period following the contract completion date. This action will not operate to extend the performance time for the balance of the work. The time stated for completion shall include final cleanup of the premises.

(2). Should any or all-optional bid items be awarded, the optional bid items must be completed concurrently with the base bid items. The time stated for completion shall include total completion of the punch list and the final cleanup of the premises in accordance with FAR 52.212-3 (Dec. 1991).

a. Location: The site of work is located at the corner of New York State route 100c Grasslands road and Walker road in the town of Mt. Pleasant, New York. All rules and regulations issued by local government authorities, as well as the City of New York, covering general safety, security, fire protection and sanitation and pollution control requirements, ect., shall be observed by the Contractor. In addition to complying with these regulations, the Contractor shall require compliance of all his subcontractors, employees, agents or other personnel connected with the performance of the contract.

b. The Contractor shall furnish all labor, materials, equipment, and services for all work required by this procurement.

c. All work shall be in accordance with this solisitation or instructions attached hereto and made a part thereof, or to be furnished hereafter by the Contracting Officer and subject, in every detail, to his supervision, direction, and instructions. (DOD FAR Supplement 52.236-7014).

e. Magnitude of Construction Project: The estimated value of the proposed work is between **$5,000,000 and $10,000,000** .

2. LIQUIDATED DAMAGES – CONSTRUCTION

a. If the Contractor fails to complete the work within the time specified in the

contract, or any extension, the Contractor shall pay to the Government as liquidated damages, the sum of $ **1500** for each day of delay.

b. If the Government terminates the Contractor's right to proceed, liquidated damages will continue to accrue until the work is completed. These liquidated damages are in addition to excess costs of repurchase under Termination clause.

c. At a time before the scheduled date of project completion (including all extensions) and before the project is physically and functionally complete to the satisfaction of the Government, the Government at its sole discretion may agree to accept transfer of the facility or project provided that the remaining work to be done (100% complete) is completed no later than 30 days from the date of transfer. In this case the contractor shall pay liquidated damages for punchlist items not completed in the daily amount of $ **1500** per day commencing after 30 days of project transfer or after date required for project completion, whichever occurs later.

3. EQUAL OPPORTUNITY PREAWARD CLEARANCE OF SUBCONTRACTORS

Notwithstanding the clause of this contract entitled "Subcontracts", the Contractor shall not enter into a first-tier subcontract for an estimated or actual amount of $1 million or more without obtaining in writing from the Contracting Officer a clearance that the proposed subcontractor is in compliance with the equal opportunity requirements and therefore is eligible for award. (FAR 52.222-28)

4. INSURANCE (Dec. 1991)

a. The Contractor shall procure and maintain during the entire period of his performance under this contract the following minimum insurance:

(1) General Liability Insurance (Comprehensive form of policy):
Bodily Injury Liability - $500,000 per occurrence.
Property Damage Liability - $20,000 per accident.

(2) Automobile Liability Insurance (Comprehensive form of policy):
Bodily Injury Liability - $200,000 per person and $500,000 per accident.
Property Damage Liability - $20,000 per accident.

(3) Workmen's Compensation and Employer's Liability Insurance: Compliance with applicable workmen's compensation and occupational disease statutes is required. Employer's liability coverage in the minimum amount of $100,000 is also required.

b. The Contractors and all Subcontractors must name the City of New York as an additional insured and all contractors and subcontractors do agree to indemnify the City of New York.

c. Prior to the commencement of work hereunder, the Contractor shall furnish to the Contracting Officer and to Vassilios Zoumboulias , P.E., Chief Security Systems Development, Water Systems Planning, Bureau of Water Supply, Department of Environmental Protection, CITY of NEW YORK a certificate or statement of the above required insurance. The policies evidencing required insurance shall contain an endorsement to the effect that cancellation or any material change in the policies adversely affecting the interests of the Government in such insurance shall not be effective for such a period as may be prescribed by the laws of the State in which this contract is to be performed and in no event less than thirty (30) days after written notice thereof to the Contracting Officer.

d. The Contractor agrees to insert the substances of this clause, including this paragraph in all subcontracts hereunder. (FAR 52.228-5)

5. PERFORMANCE OF WORK BY THE CONTRACTOR

The Contractor shall perform on the site, and with its own organization, work equivalent to at least twenty (20) percent of the total amount of work to be performed under the contract. This percentage may be reduced by supplemental agreement to this contract if, during performing the work, the Contractor requests a reduction and the Contracting Officer determines that the reduction would be to the advantage of the Government.

6. CERTIFICATES OF COMPLIANCE

Any certificates required for demonstrating proof of compliance of materials with specification requirements shall be executed in 4 copies. Each certificates shall be signed by an official authorized to certify in behalf of the manufacturing company and shall contain the name and address of the Contractor, the project name and location, and the quantity and date or dates of shipment or delivery to which the certification apply. Copies of laboratory tests reports submitted with certificates shall contain the name and address of the testing laboratory and the date or dates of the tests to which the report applies. Certification shall not be construed as relieving the Contractor from furnishing satisfying material, if, after tests are performed on selected samples, the material is found not to meet the specific requirements. (ECI 7-670.3).

7. IMPLEMENTING GUARANTEES

At any time subsequent to the acceptance by the Government of a completed installation under this contract, which installation is required to be covered by a specific

guarantee under the terms of the various sections in the TECHNICAL PROVISIONS, the New York City Department of Environmental Quality will be an authorized party for the purpose of implementing the provisions of such guarantees in behalf of the Government.

8. BID GUARANTEE

See contract clause entitled BID GUARANTEE in Section 00700 CONTRACT CLAUSES.

9. CONTRACT DRAWINGS, MAPS AND SPECIFICATIONS (FAR 52.236-7002)

See contract clause entitled CONTRACT DRAWINGS, MAPS AND SPEJCIFICATIONS in Section 00700 CONTRACT CLAUSES.

10. RECORD DRAWINGS

a. **General:** The Contractor will maintain as-built drawings during the construction period and will submit final record drawings at final completion.

b. **Computer Aided Drafting (CAD):** The Contractor shall be required to update the Computer-Aided Drafting (CAD) record for the project drawings consisting of computer disks or magnetic media in the appropriate CAD format (Autocad 2004) for the project. The Contractor will update the CAD record identical to the final as-built drawings, and will return the CAD record to the Contracting Officers representatives with the same requirements and late penalty as indicated in the paragraph " Final Requirements", below. Scanned drawings will not be acceptable. All other requirements indicated herein will still apply. The Contractor may use the updated CAD record to print blue-line or mylar drawings as required.

c**.** **Progress As-built Prints:** During construction the Contractor is responsible for maintaining up to date one set of paper prints to show as-built construction conditions. These prints shall be kept current and available on the job site at all times. All changes from the contract plans which are made in the work or additional information which might be uncovered in the course of construction shall be accordingly and neatly recorded as they occur by means of details and notes. The as-built prints will be jointly inspected for accuracy and completeness by the Contracting Officer's Representative and a responsible representative of the Contractor prior to submission of each monthly pay estimate. Progress as-builts shall show the following information, but not limited thereto:

(1) The location and description of any utility lines, valves, or other installations of any kind within the construction area. The location includes dimensions to permanent features.

(2) The location and dimensions of any changes with the building and structure.

(3) Correct grade or alignment of roads, structures or utilities if any changes were made from the contract plans.

(4) Correct elevations if changes were made in site grading

(5) Changes in details of design or additional information obtained from working drawings specified to be prepared and/or furnished by the Contractor including but not limited to fabricated, erection, installation plans and placing details, pipe sizes, insulation material, dimensions of equipment foundations, etc.

(6) The topography and grades of all drainage installed or affected as part of the project construction.

(7) All changes, which result from contract modifications.

(8) Where contract drawings or specifications allow options, only the option selected for construction shall be shown on the as-built prints.

(9) Systems designed or enhanced by the Contractor, such as HVAC controls, fire alarm, fire sprinkler and irrigation systems.

(10) All amendments to the contract drawings issued during the solicitation period shall be posted on the as-built drawings.

d. **Preliminary Submittal:** The Contractor shall prepare two copies of progress prints and these shall be delivered to the Contracting Officer at the time of final inspection for his review and approval. These as-built prints shall be neat, legible and accurate. Upon approval, one copy of the as-built prints will be returned to the Contractor for use in preparation of final as-built drawings. Upon review, if the drawings are found to contain errors and/or omissions, they shall be returned to the Contractor for corrections and return of the as-built prints to the Contracting Officer within ten (10) calendar days.

e. **Record Drawing Preparation:** After approval of the progress as-built prints, the CAD drawings shall be modified as may be necessary to correctly show all the features of the project as it has been constructed by bringing the contract set into agreement with the approved as-built prints, adding such additional drawings as may be necessary. The Contractor shall be responsible for the protection and safety thereof until returned to the Contracting Officer. Any drawings damaged or lost by the Contractor shall be satisfactorily replaced by the Contractor at his expense.

(1) Only personnel proficient in the preparation of engineering drawings to

standards satisfactory and acceptable to the Government shall be employed to modify the reproduction drawings or prepare additional new drawings. All additions and corrections to the contract drawings shall be neat, clean and legible, and shall match the adjacent line work and/or lettering being annotated in type, density, size and style. All CAD drafting work shall be done using the same medium that was employed on the original contract. The Contracting Officer will review all record drawings for accuracy and conformance to the above specified drafting standards. The Contractor shall make all corrections, changes, additions and deleting required to meet these standards. The title block to be used for any new as-built drawings shall be similar to that used on the original contract drawings.

(2) When final revisions have been completed, each drawing shall be lettered with the words "RECORD DRAWING AS-BUILT" followed by the name of the Contractor in lettering at least 3/16" high. All original contract drawings shall be marked either "As-Built" drawing denoting no revision on the sheet or "Revised As-Built" denoting one or more revisions. All revisions to the original contract drawings will be dated in the revision block.

f. **Final Requirements:** After receipt by the Contractor of the approved preliminary As-Built, the Contractor will make final record drawings submitted within 30 days. The submittal shall consist of the Final revised CAD Disks, completed record drawings, one mylar reproducible print of these drawings and the return of the approved marked-up as-built prints. They shall be complete in all details. All As-Built drawings shall include the professional seals and signatures of the appropriate design professional, the engineer or architect of record. All CAD files, paper prints, and reproducible drawings become property of the Government upon final approval. Failure to submit as-built drawings and final record drawings as required herein shall be cause for withholding any payment due the Contractor under this contract. Approval and acceptance of the final record drawings shall be accomplished before final payment is made to the Contractor.

g. **Beneficial Occupancy Drawings:** If the Government accepts beneficial occupancy of a facility, and the Contractor is unable to provide the final record drawings within 45 days after the date of beneficial occupancy, the Contractor shall provide paper sepias for that facility. The paper sepias shall incorporate all changes to as-built drawings made up to the time of beneficial occupancy. Contractor is still obligated to comply with "Final Requirements" paragraph above.

h. **Payment:** No separate payment will be made for the as-built and record drawings required under this contract whether or not CAD record is updated, and all costs in connection therewith shall be considered a subsidiary obligation of the Contractor.

11. DESIGNATION OF PROPERTY ADMINISTRATOR

The Chief, Property and Accounting Section, U.S. Army Engineer District, New

York, Federal Building, 26 Federal Plaza, New York, N.Y. 10278-0090 is designated as Property Administrator, in connection with this contract.

12. PHYSICAL DATA

Information and data furnished or referred to below are furnished for the Contractor's information. However, it is expressly understood that the Government will not be responsible for any interpretation or conclusion drawn therefrom by the Contractor (FAR 52.236-4) (Dec. 1991).

a. Weather Conditions:
MEAN ANNUAL TEMPERATURE: 51.9 DEGREES F
Mean Annual Precipitation: 46.1 inches

See also paragraph 00800.22, TIME EXTENSIONS FOR UNUSUALLY SEVERE WEATHER.

b. Transportation Facilities:

Highways and Roads: All weather roads and highways serve the locality of the proposed work sites. The Contractor shall also construct such temporary haul roads and bridges as may be necessary for the conduct of his work. Any such temporary construction shall be restored to its original condition. All costs for the use of existing transportation facilities, for the construction of temporary facilities, and for maintenance, repair, removal and restoration shall be borne by the Contractor.

13. PRICING OF ADJUSTMENTS

When costs are a factor in any determination of a contract price adjustment pursuant to the Changes clause or any other clause of this contract, such costs shall be in accordance with Part 31 of the Federal Acquisition Regulation and DFARS 252.215-7000 (Dec. 1991) as follows: In determining whether a pricing adjustment is expected to exceed $100,000, the term “pricing adjustment” shall mean “the aggregate increases and /or decreases in cost plus applicable profits.”

14. PAYMENT FOR MATERIALS DELIVERED OFF-SITE

Pursuant to the Contract Clause in this contract titled :Payment Under Fixed-Price Construction Contracts”, materials delivered to the Contractor at locations other than the site of the work may be taken into consideration in making payments if included in payment estimates and if all the conditions of the Contract Clauses are fulfilled. Payment for items delivered to locations other than the work site will be limited to those materials which have been approved, if required by the technical provisions; those materials which

have been fabricated to the point where they are identifiable to an item of work required under this contract. Such payment will be made only after receipt of paid or receipted invoices or invoices with cancelled check showing title to the items in the prime contractor and including the value of materials and labor incorporated into the item.

15. EQUIPMENT OWNERSHIP AND OPERATING EXPENSE SCHEDULE

a. Allowable cost for construction and marine plant and equipment in sound workable condition owned or controlled and furnished by a contractor or subcontractors at any tier shall be based on actual cost data when the Government can determine both ownership and operating costs for each piece of equipment or equipment groups of similar serial and series from the Contractor's accounting records. When both ownership and operating costs cannot be determined from the Contractor's accounting records, equipment costs shall be based upon the applicable provisions of EP 1110-1-8, *"Construction Equipment Ownership and Operating Expense Schedule," Region 1. Working conditions shall be considered to be average for determining equipment rates using the schedule unless specified otherwise by the Contracting Officer. For equipment not included in the schedule, rates for comparable pieces of equipment may be used or a rate may be developed using the formula provided in the schedule. For forward pricing, the schedule in effect at the time of negotiation shall apply. For retrospective pricing, the schedule in effect at the time the work was performed shall apply.

(* This manual can be ordered from the Government Printing office by calling telephone number (202) 783-3238. There is a charge for the manual.)

b. Equipment rental costs are allowable, subject to the provisions of FAR 31.105(d)(ii) and FAR 31.205-36 substantiated by certified copies of paid invoices. Rates for equipment rented from an organization under common control, lease-purchase or sale-leaseback arrangements will be determined using the schedule except that rental costs leased from an organization under common control that has an established practice of leasing the same or similar equipment to unaffiliated lessees are allowable. Costs for major repairs and overhaul are unallowable.

c. When actual equipment costs are proposed and the total amount of the pricing action is over $25,000, cost or pricing data shall be submitted on Standard Form 1411, "Contract Pricing Proposal Cover Sheet." By submitting cost or pricing data, the Contractor grants to the Contracting Officer or an authorizing representative the right to examine those books, records, documents and other supporting data that will permit evaluation of the proposed equipment costs. After price agreement the Contractor shall certify that the equipment costs or pricing data submitted are accurate, complete and current.

16. ALTERATIONS IN CONTRACT

Portions of this contract are altered as follows:

Add the following sentence to paragraph “g” of basic contract clause, SPECIFICATIONS AND DRAWINGS FOR CONSTRUCTION:

“Upon completing the work under this contract, the Contractor shall furnish a complete set of all shop drawings as finally approved. These drawings shall show all changes and revisions made up to the time the equipment is completed and accepted.”

17. AVAILABILITY AND USE OF UTILITY SERVICES AND PERMITS

a. The Government will not make utilities available during the course of the contract. The amount of each utility consumed shall be paid for by the Contractor. The Contractor shall carefully conserve all utilities.

b. The Contractor, at its expense and in a workmanlike manner satisfactory to the Contracting Officer, shall install and maintain all necessary temporary connections and distribution lines, and all meters required to measure the amount of each utility used for the purpose of determining charges. Before final acceptance of the work by the Government, the Contractor shall remove all temporary connections, distribution lines, meters and associated paraphernalia (FAR 52.236-14).

c. Temporary Heating:

(1) The Contractor shall be responsible for providing temporary heat for all buildings until final acceptance by the Government. Temperature shall be maintained (24 hours per day) at a minimum of 50 F or as required by manufacturers printed instructions for material placement throughout the building. Electric heat shall require Contracting Officer approval. Open flame heaters are prohibited.

d. All costs associated with the above are the Contractor's and shall be included in the Base Bid price.

18. SALVAGE MATERIALS AND EQUIPMENT

The Contractor shall maintain adequate property control records for all materials or equipment specified to be salvaged. These records may be in accordance with the Contractor’s system of property control, if approved by the property administrator. The Contractor shall be responsible for the adequate storage and protection of all salvaged materials and equipment and shall replace, at no cost to the Government, all salvage materials and equipment which are broken or damaged during salvage operations as the result of his negligence, or while in his care.

a. The following items will be salvaged by the Government. The equipment will be removed by the Government.

None.

b. The following items shall be salvaged by the Contractor and turned over to the Government. The contractor shall salvage and deliver the following:

None.

c. The following items shall be salvaged by the Contractor, stored by the Contractor and reinstalled at the appropriate time by the Contractor.

None

19. IDENTIFICATION OF GOVERNMENT-FURNISHED PROPERTY

NOT USED.

20. CONSTRUCTION PROJECT SIGNS

The Contractor shall construct two signs; one for project identification and the other to show on-the-job safety performance.

a. Sample sign drawings together with mounting and fabrication details are provided at the end of this section. The signs shall be erected as soon as possible and within 15 calendar days after the date of Notice to Proceed.

b. The two signs are to be displayed side by side and mounted for reading by passing viewers. Exact placement location will be designated by the Contracting Officer.

c. Panels are fabricated using HDO (High-Density Overlay) plywood with dimensional lumber uprights and bracing. The sign faces are non-reflective vinyl.

d. All legends are to be die-cut or computer-out in the sizes and type-faces specified and applied to the white panel background following the graphic formats shown on the attached sheets. The Communications Red panel on the left side of the construction project sign with Corps signature (reverse version) is screen printed onto the white background.

e. No separate payment will be made for erecting and maintaining the signs and all costs in connection therewith will be considered the obligation of the Contractor. Upon completion of the project, the Contractor shall remove the signs from the work area.

21. LABOR SURPLUS AREA EXPENDITURE REQUIREMENTS

NOT USED.

22. TIME EXTENSIONS FOR UNUSUALLY SEVERE WEATHER

a. This provision specifies the procedure for the determination of time extensions for unusually severe weather in accordance with the contract clause entitled "TERMINATION FOR DEFAULT - DAMAGES FOR DELAY - TIME EXTENSIONS". The listing below defines the monthly anticipated adverse weather for the contract period and is based upon NOAA or similar data for the geographic location of the project.

STATION LOCATION: New York

MONTHLY ANTICIPATED ADVERSE WEATHER CALENDAR DAYS

JAN	FEB	MAR	APR	MAY	JUN	JUL	AUG	SEP	OCT	NOV	DEC
(8)	(7)	(7)	(9)	(9)	(8)	(5)	(7)	(5)	(8)	(6)	(9)

(1) Upon acknowledgment of the Notice to Proceed (NTP) and continuing throughout the contract, the contractor will record on the daily CQC report, the occurrence of adverse weather and resultant impact to normally scheduled work. The above schedule of anticipated adverse weather will constitute the base line for monthly (or portion thereby) weather time evaluations. Actual adverse weather days will be required on a Calendar day basis (include weekends and holidays) and compared to the monthly anticipated adverse weather in subparagraph "a" above. For purposes of subparagraph "2" the term actual adverse weather days shall include days impacted by actual adverse weather days.

(2) The number of actual adverse weather days shall be calculated chronologically from the first to the last day in each month. Once the number of actual adverse weather days anticipated in subparagraph "a" above have been incurred, the Contracting Officer will examine any subsequently occurring adverse weather days to determine whether a Contractor is entitled to a time extension. These subsequently occurring adverse weather days must prevent work for 50 percent or more of the Contractor's work day and delay work critical to the timely completion of the project. The Contracting Officer will convert any delays meeting the above requirements to Calendar days and issue a modification in accordance with the General Provision entitled "TERMINATION FOR DEFAULT -DAMAGES FOR DELAY -TIME EXTENSIONS".

b. The Contractor's schedule must reflect the above anticipated adverse weather delays on all weather dependent activities.

23. CONTRACTOR PREPARED NETWORK ANALYSIS SYSTEM

See Specification 01320.

24. IDENTIFICAITON OF EMPLOYEES

a. The Contractor shall be responsible for furnishing to each employee and for requiring each employee engaged on the work to display such identification as may be approved and directed by the Contracting Officer. All prescribed identification shall immediately b delivered to the Contracting Officer for cancellation upon the release of any employees. The photo identification badges shall be photo plastic laminate with a bright orange bar at the top. The badges shall indicate the project name, prime contractor name, subcontractor name, badge no., employee's signature and photograph. These badges will be supplied to all employees including subcontractors. All personnel working on the project must be in possession of their contractor badges at all times. When required by the Contracting Officer, the Contractor shall obtain and submit fingerprints of all persons employed or to be employed on the project. (DOD FAR Supplement 52.236-7007)

b. VEHICLE REGISTRATION/TRAFFIC REGULATIONS: The Contractor and subcontractors shall register all company and private vehicles with appropriate State and Local Authorities. All contractor vehicles are subject to random searches while on the project site.

25. FIELD OFFICE

NOT REQUIRED.

26. EXCLUSION OF PERIODS IN COMPUTING COMPLETION SCHEDULES

NOT USED.

27. QUANTITY SURVEYS

a. Quantity surveys shall be conducted, and the data derived from these surveys shall be used in computing the quantities of work performed and the actual construction completed and in place.

b. The Contractor shall conduct the original and final surveys and surveys for any periods for which progress payments are requested. All these surveys shall be conducted under the direction of a representative of the Contracting Officer, unless the Contracting

Officer waives this requirement in a specific instance. The Government shall make such computations as are necessary to determine the quantities of work performed or finally in place. The Contractor shall make the computations based on the surveys for any periods for which progress payments are requested.

c. Promptly upon completion a survey, the Contractor shall furnish the originals of all field notes and all other records relating to the survey or to the layout of the work to the Contracting Officer, who shall use them as necessary to determine the amount of progress payments. The Contractor shall retain copies of all such material furnished to the Contracting Officer.

28. TIME EXTENSIONS

Notwithstanding any other provisions of this contract, it is mutually understood that the time extensions for changes in the work will depend upon the extent, if any, by which the changes cause delay in the completion of the various elements of construction. The change order granting the time extension may provide that the contract completion date will be extended only for those specific elements so delayed and that the remaining contract completion dates for all other portions of the work will not be altered and may further provide for an equitable readjustment of liquidated damages under the new completion schedule.

29. MISPLACED MATERIAL

NOT USED.

30. SUPERINTENDENCE OF SUBCONTRACTORS

a. The Contractor shall be required to furnish the following, in addition to the superintendence required by the Contract Clause titled, 'SUPERINTENDENCE BY THE CONTRACTOR."

(1) If more than 50% and less than 70% of the value of the contract work is subcontracted, one superintendent shall be provided at the site and on the Contractor's payroll to be responsible for coordinating, directing, inspecting and expediting the subcontract work.

(2) If 70% or more of the value of the work is subcontracted, the Contractor shall be required to furnish two such superintendents to be responsible for coordinating, directing, inspecting and expediting the subcontract work.

b. If the Contracting Officer, at any time after 50% of the subcontracted work has been completed, finds that satisfactory requirement is being made, he may waive all or part of the above requirement for additional superintendence subject to the right of the

Contracting Officer to reinstate such requirement if at any time during the progress of the remaining work he finds that satisfactory progress is not being made.

31. PROCEDURES FOR SUBMISSIONN AND PAYMENT OF ALL CONTRACT PAYMENTS

In addition to the requirements contained in the Contract Clause entitled "PAYMENTS UNDER FIXED-PRICE CONSTRUCTION CONTRACTS" and to implement the requirements of the Prompt Payment Act Amendments of 1988, P.L. 100-496, the following shall apply to all payments made under this contract:

a. At the time of submission of the progress chart, the Contractor shall submit for approval by the Contracting officer or his authorized representative a breakdown of the contract work which shall be to the degree of detail required by the Contracting Officer, or his representative, to effect reasonable progress payments. The Contracting Officer, or his representative, shall review this breakdown within 30 calendar days after receipt and either advise the Contractor that it is approved or disapproved, and if disapproved the reasons for disapproval. Only after the breakdown is approved shall any payment invoice be accepted from the Contractor and any payment made to him. The Contracting Officer can determine if it is in the best interest of the Government to make payment without an approved breakdown; however, in no case shall more than 10% of the contract amount be paid unless the breakdown is approved.

a. The Contractor shall submit his request for payment by submission of a proper invoice to the office or person(s) designated in subparagraph c. For purposes of payment a "proper invoice" is defined as the following:

(1) An estimate of the work completed in accordance with the approved breakdown indicating the percentage of work of each item and the associated costs.

(2) A properly completed Eng Form 93 and 93a (where required).

(3) All contractual submissions indicated elsewhere in this contract to be submitted with payment, such as updated progress schedules, updated submittal registers, etc.

(4) The following certification executed by a responsible official of the organization authorized to bind the firm. A "responsible official" would be a corporate office, partner, or owner, in the case of a sole proprietorship.

I hereby certify, to the best of my knowledge and belief, that –

(a) The amounts requested are only for performance in accordance with the

specifications, terms and conditions of the contract;

(b) Payments to subcontractors and suppliers have been made form previous payments received under the contract and timely payments will be made from the proceeds of the payment covered by this certification, in accordance with subcontract requirements and the requirements of Chapter 39 of Title 31, Untied States Code; and

(c) This request for progress payments does not include any amounts which the prime contractor intends to withhold or retain from a subcontractor or supplier in accordance with the terms and conditions of the subcontract.

(d) All required prime and subcontractor payrolls have been submitted.

_____
(Name)

_____
(Title)

_____
(Date)

c. The Government shall designate the office or person(s) who shall first receive the invoice submissions and the Contractor shall be so notified at the pre-construction conference. In addition to the designated Project Engineer, the Contractor shall at the same time submit one copy of the detailed breakdown and the Eng Form 93 and 93a Form to the Area Engineer.

d. The Government representative shall return any request for payment which is deemed defective within 7 days of receipt and shall specify the defects. If the defect concerns a disagreement as tot he amount of work performed and or the amount of the payment being submitted, the Government and the Contractor's representative should meet to resolve the difference and reach agreement. Upon agreement, the Contractor shall submit a new breakdown and Eng Form 93 (and 93a) and any other submissions requiring correction. These will be incorporated with the previous submittal and will then constitute a proper invoice.

e. If agreement cannot be reached, the Government shall determine the proper amount per Contract Clause, PAYMENTS UNDER FIXED-PRICE CONSTRUCTION CONTRACTS and process the payment accordingly. In this event, a "proper invoice" for Prompt Payment Act purposes will not have been submitted to the Government.

f. The Government shall pay the Contractor in accordance with the following time frames:

(1) Progress Payments . From the date a "proper invoice" is received, in accordance with subparagraphs b and d of this clause, the Government will issue a check with 14 calendar days.

(2) Reduction in Retainage Payment. If during the course of the contract, a reduction in retainage payment is required, the Government shall issue a check within 14 calendar days after the approval of the release to the Contractor by the Contracting Officer or his authorized representative.

(3) Final Payment. A final payment request shall not be considered valid until the Contractor has fulfilled all contract requirements including all administrative items, payrolls, warranties, etc. and has submitted a release of claims. When the Contractor has fulfilled all contract requirements and a "proper invoice" has been submitted, the Government shall issue a check within 14 days from the date of acceptance o the project by the Contracting Officer.

32. VERIFICATION OF SMALL BUSINESS UTILIZAITON

a. This clause is applicable to small business concerns whose contracts exceed $1,000,000.

b. In accordance with the clause at FAR 52.219-8, entitled UTILIZATION OF SMALL BUSINESS CONCERNS AND DISADVANTAGED BUSINESS CONCERNS, in effect on the date of this contract, the Contracting Office may survey the extent of small and small disadvantaged business utilization under this contract. The Contractor may be required to report to the Contracting Officer statistical data on the number and dollars amounts of subcontracting awards with small business and small disadvantaged businesses.

c. As appropriate, the Contracting Officer may require one or more follow-up reports to the initial report.

d. The Contractor agrees to insert this clause in any subcontract that may exceed $1,000,000, including this subparagraph d.

33. HAZARDOUS MATERIAL IDENTIFICAITON & MATERIAL SAFETY DATA

a. The Contractor agrees to submit a Material Safety Data Sheet (Department of Labor Form OSHA-20), as prescribed in Federal Standard No. 313B, for all hazardous material 5 days before delivery of the material, whether or not listed in Appendix A of the

Standard. This obligation applies to all materials delivered under this contract which will involve exposure to hazardous materials or items containing these materials.

b. "Hazardous material", as used in this clause, is as defined in Federal Standard No. 313B, in effect on the date of this contract.

c. Neither the requirements of this clause nor any act or failure to act by the Government shall relieve the Contractor of any responsibility or liability for the safety of Government, Contractor, or subcontractor personnel or property.

d. The Contractor shall comply with applicable Federal, State, and local laws, codes, ordinances, and regulations (including the obtaining of licenses and permits) in connection with hazardous material.

e. The Government's rights in data furnished under this contract with respect to hazardous material are as follows:

(1) To use, duplicate, and disclose any data to which this clause is applicable. The purposes of this right are to (i) apprise personnel of the hazards to which they may be exposed in using, handling, packaging, transporting, or disposing of hazardous materials; (ii) obtain medical treatment for those affected by the material; and (iii) have others use, duplicate, and disclose the data for the Government for these purposes.

(2) To use, duplicate, and disclose data furnished under this clause, in accordance with subparagraph (e) (1) (i) above, in precedence over any other clause of this contract providing for rights in data.

(3) That the Government is not precluded from using similar or identical data acquired from other sources.

(4) That the data shall not be duplicated, disclosed, or released outside the Government, in whole or in part for any acquisition or manufacturing purpose, if the following legend is marked on each piece of data to which this clause applies : "This is furnished under United States Government Contract No_____ and shall not be used, duplicated or disclosed for any acquisition or manufacturing purpose without the permission of _____. This legend shall be marked on any reproduction of this data." (End of Legend)

(5) That the Contractor shall not place the legend or any other restrictive legend on any data which (i) the Contractor or any subcontractor previously delivered to the Government without limitations or (ii) should be delivered without limitations under the conditions specified in the Federal Acquisition Regulation in the clause at 52.227-14, Rights in Data.

f. The Contractor shall insert this clause, including this paragraph (f), with appropriate changes in the designation of the parties, in subcontracts at any tier (including purchase designations or purchase orders) under this contract involving hazardous material.

g. Prior to commencement of work, the Contractor shall provide a written plan that outlines safety precautions when using any hazardous substance as defined in 29 CFR 1910.1200. This plan will include copies of any Material Safety Data Sheets (MSDS) for hazardous substances that will be used. This plan may be included in the Contractor's accident prevention plan and must be reviewed by the COR prior to commencement of work.

(End of clause) (FAR 52.223-3)

34. <u>SAFETY AND HEALTH REQUIREMENTS MANUAL</u>

If this contract is for construction or dismantling, demolition, or removal of improvements with any Department of Army agency or component, the Contractor shall comply with all pertinent provisions of the latest version of U.S. Army Corps of Engineers Safety and Health Requirements Manual, EM 385-1-1, in effect on the date of the solicitation. The latest edition of the U.S. Army Corps of Engineers Safety and Health Requirements Manual, EM 385-1-1 and it changes are available at http://www.hq.usace.army.mil (at the HQ homepage select Safety and Occupational Health). Contractor shall be responsible for complying with the current edition and all changes posted on the web as of effective date of this solicitation.

a. It is the Contractor's responsibility to ensure that its employees and those of any, or all other subcontractors', do not perform any required work in surroundings, or under conditions which are unsafe, dangerous to the employees' health. All work done must be performed in a safe manner, that is in compliance with the Corps of Engineers', Federal, State and local safety laws and regulations.

b. Before commencing the work, the Contractor shall meet with representatives of the Contracting Officer to discuss and develop a mutual understanding relative to administration of the overall safety program. To ensure this is accomplished, prior to commencement of work at any job site, an acceptable accident prevention plan, written by the prime Contractor for the specific work and implementing, in detail, pertinent requirements of EM 385-1-1 and other applicable regulations, shall be forwarded to the Contractor Administrator and Post Safety Officer. The Plan shall include, but not limited to, what control measures the Contractor will take to control hazards associated with materials, services, operations and equipment. The plan shall be forwarded for approval within 20 days after NTP and must be approved before any work can be started. This plan shall provide for frequent and regularly scheduled safety/health inspections of the work site by contractor management who are knowledgeable of OSHA 1910 (Industrial), OSHA 1926 (Construction) and EM 385 1-1 US Corps of Engineers Safety and Health Requirements Manual. The Safety/Health representative shall correct any unsafe/violated condition immediately.

c. Any job which is observed to be performed in an unsafe or hazardous manner that creates an imminent danger to the public or Contractor's employees, will be shut down by either the Contracting Officer or one of their designates.

d. The following publications/standards are recommended for Contractor's reference files. This is not intended as an all encompassing list:

OSHA 1926 (Construction)
OSHA 1910 (Industrial)
EM 385 -1-1 (Oct. 1992, or most recent version)
ANSI Standards
National Electric Code (NEC)
National Fire Protection Association Codes (NFPA)
New York State: Vehicle and Traffic Law (most recent edition)
New York State Building Construction Codes
Industrial Code Rule 23 (Department of Labor)
International Building Codes

e. The contractor shall maintain on-site communication between key personnel, subcontractors and the Government by the use of commercial grade “walkie-talkie” radios. One radio will be provided for Government use.

f. All motorized equipment/vehicles shall be inspected daily and shall be taken out of service if not in safe operating condition. Include record of inspections on daily CQC reports.

35. SPECIAL SCHEDULING REQUIREMENTS FOR MECHANICAL AND ELECTRICAL SYSTEMS

NOT USED.

36. SUBMISSION OF CLAIMS

The following shall be submitted to the Contracting at the following address: U.S. Army Corps of Engineers, New York District, 26 Federal Plaza, New York, New York 10278-0090:

a. Claims referencing or mentioning the Contracting Disputes Act of 1978.

b. Requests for a written decision by the Contracting Officer.

c. Claims certified in accordance with the Contract Disputes Act of 1978.

No other Government representative is authorized to accept such requests. A copy shall also be provided to the Authorized Representative of the Contracting Officer.

The Contractor shall also provide the Contracting Officer with a copy of any requests for additional time, money or interpretation of contract requirements which were provided to the Authorized Representative of the Contracting Officer and which have not been resolved after 90 days.

37. CONSTRUCTION COLOR BOARD SUBMITTALS

The Contractor shall submit four sets of color boards depicting samples of all finish materials. The color board (finishes sample submittal package) shall include all visible exterior and interior materials and finishes that are a part of each building (and/or structure) or built-in items provided under this contract. The color boards shall be delivered to each of the addresses listed below in the section. The Contractor should obtain approvals of the entire color board submission before beginning any work involving final finishes. The Contractor shall use the following format when assembling the color boards: See Section 01012, "DESIGN AFTER AWARD".

38. ROAD CLOSURES AND UTILITY OUTAGES

a. UTILITY OUTAGES:

(1). General: The Contractor is advised that the existing utilities service other buildings or areas adjacent to the specific work sites. These buildings will be active and utilized for the entire period of this contract. The Contractor shall maintain all utilities and systems operational at all times.

(2). Approval for outages: All utility outages shall be scheduled by the Contractor and approved by the local utility or local Governmental agency/activity having jurisdiction over that specific utility system.

b. ROAD CLOSURES:

Road closures outside the immediate work area shall not be allowed except as specifically approved by the local and/or State agency having jurisdiction over the local road network. Utility installations which affect the roads shall be accomplished in manner to provide through-traffic at all times. In this regard, the Contractor shall provide plates, install utilities in one half of the road at one time; provide temporary access, etc. The Contractor shall submit to the Contracting Officer, a proposed plan indicating how the work is to be performed in road areas and how through-traffic will be maintained. The Contractor shall provide temporary protection, signage, flagmen and traffic controls to maintain free vehicular movement as shown on the plans. Temporary protection, signage and traffic controls shall comply with New York State Department of transportation requirements. The plan shall be submitted thirty (30) calendar days prior

to initiating any work in the affected road access. No work shall take place until the plan is approved by the Contracting Officer and the contractor has obtained written approval from the appropriate local authority.

39. ACCESS ROUTES, CONTRACTOR AREAS, DELIVERY AND VISITOR CONTROL

a. Contractor's personnel and construction equipment will not be permitted in any place other than what is designated as the Site, unless specifically authorized by the Contracting Officer and the local Governmental agency/activity having jurisdiction.

b. The Contractor will utilize the areas within his construction limits for his daily staging. The Contractors' area shall be surrounded by a 8 ft. high, anchored to ground, chain link fence. The contractor shall maintain the construction fence. The contractor will remove the construction fence at completion of the job and restore area disturbed by the fence. Trailers, materials, or equipment shall not be placed or stored outside the fenced area. Trailer, equipment, or materials shall not be open to public view with the exception of those items, which are in support of ongoing work on any given day. Materials shall not be stockpiled outside the fence in preparation for the next day's work. At the end of each work day mobile equipment, such as tractors, wheeled lifting equipment, cranes, backhoes and like equipment, shall be parked within the fenced area. The following shall remain fully accessible: hydrants and access ways. The Contractor shall be responsible for all temporary connections (power, water telephone, etc.) to the staging area. The Contractor shall maintain the area in a clean and neat condition. Parking for Contractor's employees within the staging area is subject to Contracting Officer approval. Contractor's employees parking will be limited to specific site area.

c. Additional off-site storage areas are not available. The Contractor must obtain additional space off-site, if required, at his own expense.

d. The Contractor will be responsible for the control of material deliveries, vendors, suppliers, prospective employees and other authorized personnel entering the project sites relating to this contract. The Contractor will install signs at entrances to the project directing deliveries and visitors to the proper entry points.

e. The Contractor will be permitted to utilize the site for material storage and unloading, material hoists, rubbish containers, rubbish chutes (if any), temporary office and personnel dressing facilities, and all other items required for staging.

f. The Contractor shall provide chemical toilets for his personnel in the staging areas, and shall be responsible for cleaning and servicing these toilets in accordance with pertinent health regulations and will assure a frequency of service as required to prevent odors or other nuisance. Use of toilet facilities by Contractor's employees within the new buildings will not be permitted.

g. The Contractor shall provide weather tight and waterproof storage facilities for all materials stored at the site and required to be incorporated into the work.

h. The Contractor shall remove rubbish containers when full or every two weeks which ever comes first.

i. The color of dumpsters, trailers, storage sheds and portable latrines shall be approved by the Contracting Officer.

j. All materials, trailers, and storage sheds in staging and construction areas shall be elevated and stored a minimum of 3 feet from any structure or fixed object.

k. Contractor shall limit employees to the work site.

40. EXISTING PARKING

NOT USED.

41. MAINTENANCE OF ACCESS ROADS

a. The Contractor will be responsible for the maintenance of access roads between the local road/highway network and the construction site. Maintenance of access roads will include snow removal. The Contractor will remove snow piles and rows when they affect safety, hamper emergency and fire vehicles, or block proper drainage.

b. The Contractor shall not inflict damage upon land properties, roads outside the authorized construction areas by unwarranted entry upon, driving over curbs, passage through, damage to or disposal of, material on such land or property, or overloading of roads. The Contractor shall hold and save the Government, its officers and agents free from liability of any nature or kind arising from any trespassing or damage occasioned by his operations.

42. FIRE PROTECTION

The Contractor will provide fire protection in accordance with Section 9 of EM 385-1-1, US Army Corps of Engineers Safety and Health Requirements Manual. The Contractor's means of providing such protection will be included in his safety plan as required by the contract. The plan shall include fire exits and access routes during construction and during partial acceptance of the facilities, if any.

Although local fire departments will respond to emergencies, the capabilities of these departments will be limited by their available equipment and access to the construction sites.

43. SITE AND BUILDING SECURITY

a. The Contractor will be responsible for the security of the areas within the contract limits. When the Government takes possession of certain areas, the Contractor will be responsible for the areas remaining under his control.

b. The Contractor will be responsible for furnishing an identification badge to each employee in accordance with the contract clause 24 "IDENTIFICATION OF EMPLOYEES". The Contractor shall provide an updated list of all employees working on the site. This list shall be provided on a monthly basis or when requested by the Contracting Office throughout the duration of this contract.

c. The Contractor shall submit a written Security Plan for the approval of the Contracting Officer no later than thirty (30) calendar days after receipt of the NTP. The plan will address the requirements stated above, the various contract technical and special requirements and the New York City Department of Environmental Protection regulations and requirements. The Security Plan will set operating procedures and organizational structure including designation of responsible individuals.

44. UTILITY VERIFICATION

The Contractor shall locate and determine elevations of all existing utilities which he will encounter during his work and shall protect all such utilities from any possible damage during the progress of his work. The Contractor shall excavate by hand, in the vicinity of existing lines and operations. If damage should occur due to the Contractor's operations, repairs shall be made by qualified personnel at the Contractor's expense.

45. ARTIFACTS, PRESERVATION & PROTECTION OF HISTORICAL, ARCHAEOLOGICAL AND CULTURAL RESOURCES

Any and all items of prehistoric, historic and military relics or memorabilia, which may be discovered in the course of the construction activities, shall remain the property of the Government. Examples of such items include but are not limited to: printed matter or other papers, buttons, buckles, or fragments of uniforms, buried weapons, bayonets, sabers, cannon balls, ammunition, fragments of structures or foundations, in short any item of historical or archaeological value. Federal legislation provides for the protection, preservation and collection of scientific, pre-historic, historical and archaeological data, including relics and specimens which might otherwise be lost due to alteration of terrain or building features as a result of any federal construction project. Any person who, without permission, injures, destroys, excavates, appropriates or removes any historical or pre-historic artifact, object of antiquity or archaeological resource from public lands of the United States is subject to arrest and penalty of law. Where appropriate by reason of discovery, the contracting officer may order delays in time of performance or changes in

the work or both. If such delays or changes are ordered, an equitable adjustment will be made in the contract in accordance with the applicable clauses of the contract.

46. CONNECTION WITH WORK OF OTHER CONTRACTS

During the period of this contract, other contracts may be in force for the construction of other features of work on or adjacent to the site of work being accomplished under this contract. The Contractor shall arrange his plant and shall schedule and perform the work as to effectively cooperate with all other contractors and Government agencies. It is the Contractor's responsibility to know the extent of the limits of his contract. No direct or extra compensation will be allowed on account the cooperation required.

a. At all points of connection with work of other contracts, the Contract shall coordinate, as required, with the adjoining contracting to insure proper and timely connections.

b. Where the work under this contract is completed before that of the adjoining contractor, the Contractor shall terminate his work in an approved manner ready for future connection by the adjoining contractor. Pipes and conduits shall be closed with suitable caps or plugs that will prevent entry of dirt or debris, but that are readily removable when final connections are made. For underground lines that are back-filled, approved type markers that extend above the ground surface shall be provided to facilitate future location of the lines by the adjoining contract.

c. Where the work of the adjoining contractor is already in place, the Contractor shall perform all work required to effect the necessary connection, including locations of underground lines, removing of caps, providing necessary adapters or joining pieces, and all related incidental work for necessary for a proper, secure connection.

47. WORKING CONDITIONS, WORKING HOURS AND NON-WORKING DAYS

a. Working Hours: Normal working hours shall be Monday - Friday,0630 to 1800 hours. Differences to the these working hours must be approved by the Contracting Officer.

b. Non-Working Days: During the course of this contract the Contractor shall not perform any physical work during the activities listed below. The dates provided are the “on or about” dates of the activities.

(1) All Government Holidays

(2) The Contractor should anticipate four (4) additional days each calendar year on which no physical work shall be performed. These will be at the Governments discretion. The actual "No Work" days will be confirmed by the Government during the work phase in conjunction with the construction plan approval. The Contractor's schedule must reflect the above anticipated "no work" days.

c. Working Conditions:

(1) Open trenches or road restrictions will not be permitted without the approval of the Contracting Officer.

(2) Access ways shall be fully usable.

(3) All cost for conformance with the above stated requirements shall be included with the lump sum contract amount and no claim for extra cost shall be considered.

48. CONSTRUCTION DISPOSAL, HOUSEKEEPING AND CLEAN UP

a. All construction debris, excess materials or rubbish generated as a result of construction activities shall be disposed of at the Contractor's expense. Scrap, debris or surplus construction materials are not to be buried or burned on the site or disposed of in the sanitary disposal containers operated by the Government. The Contractor must obtain all necessary permit/applications required for the disposal of debris at off site locations. The Contractor is responsible for obtaining all necessary permits required for the disposal of all construction debris, including proper disposal of Hazardous Materials.

b. Spillages and Damages: All spillage and mud from the Contractor's trucks shall be removed promptly. All damages to existing curbing, roads, walks, trees, fencing, walls, landscaping and other Property resulting from the Contractor's activity, shall be repaired promptly, as directed by the Contracting Officer, and at the Contractor's expense.

c. Project Housekeeping shall be done on a daily basis. Areas requiring housekeeping include the Contractor's area, all staging areas provided to the Contractor and around all trailers. At the end of each day, the Contractor shall leave the housekeeping areas broom clean and free of rubbish, litter, and construction debris generated by that day's work. Any dirt or mud which is tracked onto paved or surfaced roadways, shall be cleaned away immediately and in no case shall the Contractor leave the site at the close of work without verifying that all dirt or mud has been removed from any paved surface beyond the limits of construction.

The Contractor shall be responsible for cutting the grass and shrub maintenance, seeding and sodding, raking leaves, snow removal, salting/sanding of walkways and steps and general site clean-up at buildings released to the Contractor. The Contractor shall provide these services for the duration the buildings are the Contractor’s responsibility. All cost for these services shall be borne by the Contractor at no additional cost to the Government.

d. The Contractor shall provide and maintain a dumpster of sufficient size at each project site. The dumpster shall be replaced at regular intervals to avoid overfilling and spillage and the area around the dumpster shall be kept clean at all times.

e. If, at any time during the progress of the work, the Contracting Officer determines that the Contractor is failing to comply with the requirements of the subparagraph above, he may direct the Contractor to take such measures as he deems necessary to constitute corrective action. Such measures may include the requirement to increase the work force assigned to the housekeeping and cleanup operations or to work during evenings or weekends until proper job conditions have been restored.

49. DISPOSAL AND BURNING

No open burning of construction material and debris will be permitted on the construction sites during the extent of this contract. Construction debris and other rubbish shall be disposed of, off site. Burning of rubbish or site removal items will not be permitted. Scrap, debris and surplus construction materials must be loaded in the Contractor's dumpsters for disposal at an off site location.

50. BUILDING OCCUPANCY

Before substantial completion of the project structures, the Contractor shall file an application for a Certificate of Occupancy or Certificate of Completion with the Department of Buildings.

In connection with the application for the Certificate of Occupancy and before final payment is issued, the Contractor shall arrange for all final inspections by the Inspection Staffs of the Department of Buildings and other City Agencies and local Agencies having jurisdiction and shall do such remedial work and construction as is required and obtain all reports by such Inspectional Staffs in order that the Certificate of Occupancy can be procured without delay.

The Contractor shall furnish the Certificate of Occupancy to the Contracting Officer as soon as it is completed.

51. PROTECTION OF OCCUPANTS AND EXISTING BUILDING FAÇADE

NOT USED.

52. DUST AND NOISE CONTROL

a. Dust Control: The Contractor will be required to maintain all excavation, embankments, stockpiles, haul roads, permanent access roads, plant sites, waste areas, borrow areas and all other work areas within or without the project boundaries free from dust which would cause a hazard or nuisance to others. Approved temporary methods of stabilization consisting of sprinkling, chemical treatment, light bituminous treatment or

similar methods will be permitted to control dust. Sprinkling, to be approved, must be repeated at such intervals as to keep all parts of the disturbed area damp at all times, and the Contractor must have sufficient competent equipment on the project site to accomplish this if sprinkling is used. Dust control shall be performed as the work proceeds and whenever dust nuisance or hazard occurs. The Contractor shall provided barriers in interior construction areas to keep occupied areas of the building free of dust. No separate or direct payment will be made to the Contractor for dust control and the cost thereof shall be considered incidental to and included in the contract prices. The Contractor will control his operations to prevent any measurable or visible dust form migrating outside of the work area.

b. Noise Control: The Contractor shall schedule extremely noisy activities with the Contracting Officer. The activities shall be planned to minimize the impact on the existing facilities and neighborhood occupants.

53. OPERATION AND MAINTENANCE MANUALS

a. The Contractor shall provide six (6) sets of operation and maintenance manuals to be used for training, operation and maintenance of each piece of operating equipment and material finishes. All material shall be clearly identified, including its location on the project. Sheets shall be 8 1/2" x 11", except pull out sheets which may be neatly folded to 8 1/2" x 11". Manuals shall be properly indexed, bound in plastic covered 3 ring, loose leaf binder with the project title lettered on the front cover, and shall contain:

1. Name, address, phone number and trade of all subcontractors.

2. Complete maintenance instruction; name, address and phone number of installing contractor, manufacturer's local representative, for each piece of operating equipment.

3. Narrative consisting of instruction for equipment and systems to include:
   a. Description of system and intent.
   b. Start-up Procedures.
   c. Emergency Procedures.
   d. Shut-down Procedures.
   e. Maintenance Instructions.
   f. Wiring Diagrams and trouble shooting guidelines.
   g. System Layout Diagrams

4. Catalog data on plumbing fixtures, valves, water heaters, heating and cooling equipment, temperature controls, fans, electrical panels, service entrance equipment, and light fixtures.

5. Instructions for use in training and operation and maintenance of each item of operating equipment.

6. Manufacturer's name, type, color designation for ceramic tile, resilient floors, wood floors, windows, doors, brick, concrete block, paint, roofing and other materials.

b. Submit six (6) copies of maintenance manual to the Contracting Officer for the DEP's use prior to request for substantial completion.

c. Operation and Maintenance Instructions: The Contractor shall provide at his own expense competent manufacturer's representatives to completely check out all mechanical and electrical systems. This requirement shall be scheduled just prior to and during the initial start-up and before requesting the final inspection of each phase. After all systems are functioning properly, the representative shall instruct DEP maintenance personnel in the proper operation and maintenance of each item. In addition, to the instruction given at the project, DEP personnel shall be given a one day classroom instruction course of the operation and maintenance of the systems. This training shall be video taped and provided to the Government.

d. Posted Operating Instructions: All major items of mechanical or electrical or specialized equipment shall have posted in a convenient and appropriate location operating instruction consisting of description of system operation, including necessary diagrams keyed to valve and piping identification systems. One set of Posted Operating Instructions shall be 36” X 24”, and posted on walls as directed. Two sets of laminated 8 1/2” X 14” Posted Operating Instructions, in three ring binders, shall be provided with the O&M manuals. The instructions shall be laminated on both sides with clear plastic laminate.

54. PREPARATION OF DD FORM 1354 "TRANSFER OF ACCEPTANCE OF MILITARY REAL PROPERTY":

At the conclusion of this contract, the Contractor will compile and furnish to the Contracting Officer all costs and quantity data of materials and systems furnished and installed. A list of items for which the costs and quantity data is required and blank DD1354's will be furnished to the Contractor by the Government. The Contractor shall return this information to the Contracting Officer within ten (10) days from receipt of the list in the form of a DD1354 form.

1. NO Asbestos Statement: Upon completion of the work, the Contractor and all of his subcontractors shall provide a written statement stating that "No Asbestos-Containing" material/products were used in the construction.

2. NO Polychlorinated Biphenyl (PCB) Statement: Upon completion of the work, the Contractor and all of his subcontractors shall provide a written statement stating that "No Polychlorinated Biphenyl (PCB)" material/products were used in the construction.

3. NO Lead Statement: Upon completion of the work, the Contractor and all of his subcontractors shall provide a written statement stating that "No Lead" material/products were used in the construction.

4. If there are exceptions to the above statements, the contractor shall identify every location, the material, and provide an assessment of the hazard(s) to humans.

5. The Contractor shall submit all project closeout documents not previously provided to the Contracting Officer at the time of the Beneficial Occupancy Inspection.

55. SCAFFOLDING

The Contractor shall furnish and securely set and maintain scaffolding required for the work. All scaffolding shall be made of good, sound materials, of adequate strength and dimensions for its intended use and substantially braced and secured to insure safety for those required to use it. All scaffolding shall bear on base plates and mud sills or other adequate firm foundation and each working platform shall be equipped with standard guardrails, mid-rails, and end rails at such height as required by the more stringent of EM 385-1-1 or 29 CFR 1926 Subpart L.

56. COORDINATION OF TRADES

The Contractor must have a competent engineer on the project site to coordinate all field work and shop drawings of the various trades prior to installation and/or submission of field or shop drawings for approval. The Contractor shall allot spaces to the various trades prior to installation of the work. In spaces where all the various installations cannot be accommodated, the Contractor shall notify the Contracting Officer and shall submit alternate solutions as to its solution at no cost to the Government. The decision of the Contracting Officer shall be final.

The Contractor shall be responsible for the coordinated drawings of the various trades showing locations and sizes of all sleeves, electric outlets, inserts, piping, shafts, hangers, lights, ducts, catwalks, pads, chases, sprinklers, smoke detectors, soffits, fascias, steel trusses, etc. Composite signed-off coordinated shop drawings shall be developed at 3/8" equals 1'-0 scale showing all mechanical-electrical work in hung ceilings and chases.

57. COORDINATION WITH INSTALLATION PERSONNEL:

NOT USED

58. PROGRESS PHOTOGRAPHS

Progress Photographs shall be pert of the Monthly Progress Meeting Schedule Update Package. See Section 01320.

59. MATERIAL HOISTS

The Contractor shall furnish, maintain and operate all materials hoists as required to complete this contract. Material hoists shall be operated by diesel or gasoline engines and shall be complete with all equipment necessary for operation, and shall meet any and all applicable laws and regulations. Material hoists shall be located on the existing site as directed by the Contracting Officer and shall run from grade to the uppermost floor. Hoists shall be enclosed by a temporary 8'-0" high chain link fence.

60. PARTNERSHIP IMPLEMENTATION PLAN

To more effectively accomplish this contract, the Government proposes to form a partnership with the Contractor. This partnership would draw on the strengths of each organization in an effort to achieve a quality product within budget and on schedule. This partnership would be bilateral in make-up and participation would be totally voluntary. If mutually agreed to by both parties, a facilitator satisfactory to both parties shall be hired who would be responsible to arrange for an offsite conference location, provide all workshop materials, and compile and distribute a completed partnering agreement to all participants within 30 days of the partnering session. Conference site location will be coordinated with the Contracting Officer for approval. Contractor should plan for the attendance of approximately 15-20 individuals from the Government in addition to the Contractor's and Sub-contractor's personnel. The cost of the facilitator and conference facility will be shared equally by the Contractor and Government. All other costs associated with partnership implementation will be borne by the Contractor. It is anticipated that the partnership conference will be for one day each time and will be held on a monthly basis.

61. DIGGING PERMIT

The Contractor is required to pre-mark the area of the excavation.

The contractor shall be responsible for obtaining a digging permit prior to commencing any excavation. All costs associated with obtaining the required digging permits shall be the responsibility of the contractor.

a. In the event that any utility line is damaged during excavation, all excavation will stop, and the Contracting Officer shall be contacted immediately. The Contractor shall take immediate action to repair the damaged utility at no additional cost to the Government.

62. PEST CONTROL

a. The Contractor shall deposit all food refuge in sealed trash containers to restrict food source for rodents.

b. The Contractor shall replace construction dumpsters at least every two weeks to prevent rodent harborage.

c. All materials, trailers, and storage sheds in staging and construction areas shall be elevated and stored a minimum of 3 feet from any structure or fixed object.

d. The Contractor shall cap all pipes at the end of each day to prevent pest infiltration.

63. COORDINATION MEETINGS

Monthly coordination meetings shall be conducted by the Contracting Officer representative with the Contractor and USACE and NYC Department of Environmental Protection personnel to review and coordinate the construction schedule. The Contractor shall provide typed minutes of each meeting within three (3) days of meeting.

The Contractor shall present any items requiring coordination with the government, both short term(next two week), and long term.

64. VIDEO TAPING

The Contractor shall video tape all existing conditions within and adjacent to the area of work for each construction phase prior to starting work on that phase. The video tape shall be of a professional quality with narration by the videographer. The tape shall be VHS format, a minimum duration of 1 hour, and recorded at standard speed. The Contractor shall notify the Contracting Officer 48 hours prior to the videotaping. No physical work will be permitted until the original videotape plus one copy has been submitted and approved by the Contracting Officer. Every room and all portions of the exterior of every building shall be video taped.

65. CONTRACTOR'S KEY MANAGEMENT PERSONNEL

The following are the minimum requirements for the contractor's key management personnel. In case of differences between the requirements of this section and any other part of the contract the most stringent will apply.

(A) **CONTRACTOR'S PROJECT MANAGER** (Overall Manager of the Project)

a. The Contractor's Project Manager shall have the following minimum qualifications:

1. Five (5) years experience as a Project Manager with a minimum of three years in the "field", on projects of comparable complexity, scope of work and cost.

b. Position Requirements Shall Include:

1. Perform all Project Management duties required of the Contractor.

2. Demonstrate knowledge of proper construction practices, procedures and management.

3. Demonstrate proficiency in reading and interpreting contract documents.

4. Demonstrate that he is capable, efficient, knowledgeable of contract requirements, cooperative, fair, reasonable ,negotiated fairly in good faith, committed to customer satisfaction and to producing a quality product in conformance with the terms of the contract.

5 Serve as the Governments' sole point of contact in all matters relating to the work including, but not limited to, contract compliance; progress of work; scheduling; financial matters and "change orders".

6 Attend all job meetings.

7 Be on job sites as required.

c. The Contractor shall submit qualifications of proposed Project Manager for approval by the Contracting Officer. Resume shall include minimum of three (3) clients with points of contact and telephone numbers who can be contacted regarding the individuals performance.

d. If the Contracting Officer determines that the Project Manager is not fulfilling the requirements of his position, the Contracting Officer may require that the Contractor replace the Project Manager.

(B) **CONTRACTOR'S SUPERINTENDENT** (Overall Field Manager Responsible for Construction)

a. The Contractor's Superintendent shall have the following minimum qualifications:

1. Five (5) years experience as a superintendent, in the "field", on projects of comparable complexity, scope of work and cost.

b. Position Requirements Shall Include:

1. Perform all superintendent duties required of the Contractor.

2. Demonstrate knowledge of proper construction practices.

3. Demonstrate proficiency in reading and interpreting construction plans and specifications.

4. Demonstrate that he is capable, efficient, knowledgeable of contract requirements, cooperative, fair, reasonable, committed to customer satisfaction and to producing a quality product in conformance with the terms of the contract.

5 Serve as the Governments' sole "Field" point of contact in all matters relating to the work including, but not limited to, scheduling of work, utility interruptions and testing.

6 Attend all job meetings.

7 Be on site at all times during construction.

8 Serves under and reports directly to the Contractor's Project Manager.

c. The Contractor shall submit qualifications of proposed superintendent for approval by the Contracting Officer. Resume shall include minimum of three (3) clients with points of contact and telephone numbers who can be contacted regarding the individuals performance.

d. If the Contracting Officer determines that the Superintendent is not fulfilling the requirements of his position, the Contracting Officer may require that the Contractor replace the Superintendent.

(C) **CONTRACTOR QUALITY CONTROL MANAGER** (Manager & Field Quality Control Personnel)

a. The Contractor's Quality Control Manager shall have the following minimum qualifications:

1. Five years of construction quality control related experience of with two (2) years experience as a Quality Control Manager in the "field", on projects of comparable complexity, scope of work and cost. He shall be a graduate of a recognized construction quality management course or have a state Professional Engineers license.

b. Position Requirements Shall Include:

1. Perform all Quality Control Management duties required of the Contractor.

2. Demonstrate knowledge of proper Quality Control practices, procedures and management.

3. Demonstrate proficiency in reading and interpreting contract plans and specs.

4 Demonstrate that he is capable, efficient, knowledgeable of contract requirements, cooperative, fair, reasonable, committed to customer satisfaction and to producing a quality product in conformance with the terms of the contract.

5 Serve as the Governments' sole point of contact in all matters relating to the quality of the work including, but not limited to, contract compliance & testing procedures.

6 May have other duties other than Quality Control, however sufficient time must be allotted to quality control duties.

7 Attend all job meetings.

8 Be on a site at all times during construction at that site.

9 Reports all deficiencies to the Government and the Contractor's Project Manager for correction.

10 Works directly under and is responsible to an officer of the contractor, at least one level higher than the contractor's project manager.

c. The Contractor shall submit qualifications of proposed Quality Control manager for approval by the Contracting Officer. Resume shall include minimum of three (3) clients with points of contact and telephone numbers who can be contacted regarding the individuals performance.

d. If the Contracting Officer determines that the Quality Control Manager is not fulfilling the requirements of his position, the Contracting Officer may require that the Contractor replace the Quality Control Manager &/or the Project Manager.

(D) **SAFETY MANAGER** (Principal in Charge of Enforcing Safety Codes)

a. The Contractor's Safety Manager shall have the following minimum qualifications:

1. Five years experience as Safety Manager, with a minimum of three of those years in the "field", on projects of comparable scope, hazardous materials/wastes and construction hazards and proximity of general public.

2 Have current certification in First Aid and CPR from a recognized approved organization such as the American Red Cross.

3 Have specialized training in personal and respiratory protective equipment and proper use of air monitoring instruments and air sampling methods and procedures. Have completed a 40-hour OSHA compliance based construction safety training course.

b. Position requirements shall include:

1. Perform all Safety Management duties required of the Contractor including duties of Site Safety Officer. Refer to specification section 01420.

2. Serve as the Government's sole point of contact, for all matters relating to the safety of the work.

3. Demonstrate a sound working knowledge of Federal and State occupational and construction health and safety regulations.

4. Demonstrate that he is capable, efficient, cooperative, reasonable, knowledgeable of Safety requirements and committed to customer satisfaction and producing a safe project in conformance with the terms of the contract.

5. Continually enforce and implement the Safety requirements of the Contract, including the Accident Prevention Plan.

6. Have the responsibility and authority to stop work at any time unsafe work practices, conditions or hazards to building occupants or other persons are present.

7. During all activities, the Site Safety Officer, as required by the Safety and Health requirements manual EM385-1-1, may fulfill the position requirements of the Safety Manager.

8. Have no other duties other than safety.

9. Works under and reports to the Contractor's Project Manager.

c. The Contractor shall submit qualifications of proposed Safety Manager for approval by the Contracting Officer. Resume shall include minimum of three (3) clients with points of contact and telephone numbers who can be contacted regarding the individuals performance.

d. If the Contracting Officer determines that the Safety Manager is not fulfilling the requirements of his position, the Contracting Officer may require that the Contractor replace the Safety Manager.

66. CONTINUITY OF QUALITY PERFORMANCE

The contractor agrees that, in the event of any staffing or corporate changes, or substitution of subcontractors and/or consultants, during the performance of this contract, including its option periods, the employees, subcontractors, or consultants engaged in the performance of the contract will continue to have the qualifications, professional background, education, and experience equal to that proposed by the contractor and accepted by the Government for contract award.

67. GOVERNMENT RESIDENT MANAGEMENT SYSTEM:

The Government will utilize an in-house NAS/Contract Administration program entitled "Resident Management System" (RMS). Refer to Section 01312 Quality Control System for requirements.

68. NOT USED.

69. DISPENSARY AND HOSPITAL FACILITIES

NOT USED.

70. CONTRACTOR WARRANTY MANAGEMENT

1. References:
    a. Clause “Warranty of Construction”, (FAR 52.246-0021)
    b. Clause “Inspection of Construction” (FAR 52.246-12)
    c. Special Requirement paragraph entitled ”Record Drawings”
    d. Specification Section entitled “Contractor Quality Control”

2. General: In order to insure that the Government systematically receives all warranties of construction, equipment and systems to which it is entitled, the contractor shall execute all actions as required by above references and as contained herein.

3. Post-Completion Inspections: For purposes of management of construction warranties, the Government conducts four and nine month warranty inspections with using agencies. The Contractor is encouraged to attend these inspections in order to better manage any warranty items for which it may be responsible.

4. Tagging of Extended Warranty Items: The Contractor shall install tags to identify items protected by extended warranty, i.e. longer than the one year general warranty of construction. The tags shall be minimum 3 inches by 5 inches in size, machine-printed in minimum 14-point type, and shall be weatherproof. Tags shall be attached to equipment if accessible or to accessible control panel, etc. As a minimum, tags shall indicate the following information:

"Extended Warranty Item:"
Name of Item
Name of System with which associated, number designation within system, or other identifier
Model Number
Serial Number
Start and end Dates of Warranty
Contract number
Contract Name
Contractor Name
Point of Contact name, organization and telephone number.

5. Posting of Instructions: In addition to any posting of operating procedures as may be required elsewhere in this contract, any equipment or system for which proper operation or maintenance is critical in order to preserve warranties, prevent damage, or for reasons of safety shall have proper operating procedures posted near the equipment or near the operating point. Instructions shall be protected by 1/16 inch thick plastic sheet. As a minimum such equipment or system shall include:

Electrical Substations
Transformers
Motor control centers
Electrical Generators
Major HVAC System components including chillers, air-handlers, fans, etc.
HVAC Control Panel
Boilers
Air Compressors

6. Warranty Meeting. At least 14 days prior to the 80% completion point of this contract (or deliverable phase thereof), the contractor will notify the Government representative for the purpose of scheduling a meeting to clarify understandings of responsibilities with respect to warranties to which the Government is entitled. The Government and contractor shall attend the warranty meeting, as well as any subcontractors, or suppliers involved in the warranty process. The Warranty Plan (below) shall have already been submitted and approved by the Government before the warranty meeting can take place, and shall be the basis of the meeting's agenda.

7. Warranty Plan. At least 30 days before the planned warranty meeting, the contractor shall submit a warranty plan for Government approval per section "Submittals". The Warranty Plan shall include all required actions and documents to assure that the Government receives all

warranties to which it is entitled. The plan shall be in narrative form and contain sufficient detail to render it suitable for use by future maintenance and repair personnel, whether tradesmen, or of engineering background, not necessarily familiar with this contract. The term "status" as indicated below shall include due date and whether item has been submitted or was accomplished. As a minimum the plan shall indicate:

a. Roles and responsibilities of all personnel associated with the warranty process, including points of contact and telephone numbers within the organizations of the contractor's, subcontractors or suppliers involved.

b. Listing and status of O&M manuals and As-built drawings, and expected delivery dates.

c. Listing and status of all training to be provided to DEPpersonnel, whether specified by contract or required by manufacturers.

d. Listing and status of delivery of all Certificates of Warranty for extended warranty items, to include roofs, HVAC balancing, pumps, motors, transformers, and for all commissioned systems such as fire protection and alarm systems, sprinkler systems, lightning protection systems, etc.

e. A list for each warranted equipment, item, feature of construction or system indicating:

Name of item
Model and serial numbers.
Location where installed
Names of manufacturers or, suppliers and phone numbers.
Names addresses and telephone numbers of sources of spare parts
Warranties and terms of warranty. This shall include one-year overall warranty of construction as required by ref. 1.a. Clearly indicate which items have extended warranties.
Cross-reference to warranty certificates as applicable
Starting point and duration of warranty period.
Summary of maintenance procedures required to continue the warranty in force.
Cross-reference to specific pertinent Operation and Maintenance manuals
Organization, names and phone numbers of persons to call for warranty service
Typical response time and repair time expected for various warranted equipment

f. The contractor's plans for attendance at the Four and Nine month post-construction warranty inspections conducted by the Government.

g. Procedure and status of tagging of all equipment covered by extended warranties.

h. Copies of instructions to be posted near selected pieces of equipment where operation is critical for warranty and/or safety reasons

71. ENVIRONMENTAL RESPONSIBILITY

USACE and NYC DEP are committed to a safe environment and take seriously the steward role as defenders of the local Watersheds. Contractors are expected to comply with all environmental requirements. Immediate actions shall be taken by the Contractor to minimize the effect of any environmental associated incidents (e.g. oil spillage, hazardous waste handling, lead abatement removal, and chemical spillage). Clean up shall be performed by the contractor in accordance with all applicable Federal, State, and local laws and regulations at no additional cost to the Government.

72. CONTRACTOR REPORTING REQUIREMENTS

1. If an incident occurs on the site pursuant to Contractor performance, whether or not caused by the Contractor, the Contractor shall immediately notify (no later than 15 minutes) the New York City Department of Environmental Protection, and the Contracting Officer. If a project related incident occurs off the project site, the Contractor shall report to the National Response Center (NRC), the NYC DEP, and the Contracting Officer immediately following discovery and shall also comply with applicable State requirements including reporting to the New York State DEC Spill Hotline at 800-457-7362, and UST NRC at 800-424-8802. When an incident is reported by phone to any of the above agencies, the Contractor shall provide the following Information:

a. Description of Incident

b. Time and Location of incident

c. Any injuries incurred

d. Estimated quantity of materials (tons, gallons, drums, etc.) involved in incident.

e. Whether the incident has reached any storm drains, sanitary sewers, ponds, or waterways.

f. Containment procedures already initiated (brief description of containment, i.e. booms, pads, embankments, sandbags.)

g. The Contractor's point of contact.

2. A written follow-up report shall be submitted to the Contracting Officer and the NYC DEP no later than five (5) calendar days after the initial incident. The written report shall be in narrative form and as a minimum include the following:

a. Description of the material involved (including identify, quantity, and manifest number).

b. What time the incident was reported, and to whom it was reported.

c. Exact Location of the incident, including description of the area involved.

d. Cause of incident and equipment and personnel involved.

e. Injuries or property damage of incident.

f. Containment procedures initiated.

g. Summary of any communications Contractor has with press, agencies, or Government officials other than the COR,

h. Description of cleanup procedures employed or to be employed at the site, including disposal location of incident materials.

3. A follow-up meeting will be held within 5 calendar days after receipt of the written report to discuss after action procedures to eliminate or prevent this type of incident in the future. The Contractor will be required to attend the follow-up meeting.

4. This reporting requirement is in addition to any other environmental related actions, notices, reports, certifications or compliance's required by other contract clauses or provisions or by federal, state or local law.

73. ENVIRONMENTAL RESPONSIBILITY

Immediate actions shall be taken by the Contractor to minimize effect of any environmental associated incidents (i.e. oil spillage, hazardous waste handling, lead abatement removal, and chemical spillage). Cleanup shall be performed by the Contractor in accordance with all applicable Federal, State, and local laws and regulations at NO ADDITIONAL COST TO THE GOVERNMENT.

74. TEMPORARY STRUCTURES

Contractor's Field Office. The Contractor shall furnish and maintain an office with a telephone at the site of the work during the entire period of construction at which he or an authorized agent shall be present at all times while the work is in progress. Readily accessible copies of both the Contract Documents and the latest working drawings shall be kept in the field office of the Contractor.

Private Property. When the Contractor temporarily occupies property adjacent to the work, he/she shall provide the COR with certified copies of agreements which permit the use of such land.

Obstruction Access. The Contractor shall not obstruct any highway or access thereto from private property except as otherwise specified. The necessary facilities and safeguards to comply with this requirement shall be provided and maintained at the expense of the Contractor.

Trespassing Prohibited. All employees of the Contractor are prohibited from trespassing on private or public property except where law permits such entrance for the purpose of underpinning or otherwise protecting adjoining structures. The Contractor shall give ample notice to the owners and users of all such structures before disturbing or using them.

75. SECURITY GUARDS AND FIRE GUARDS ON THE SITE

The Contractor shall employ security guards for the purpose of safeguarding and protecting the site. All costs for security guards and fire guards shall be borne by the Contractor.

The Contractor shall be responsible for safeguarding and protecting his/her own work, materials, tools, and equipment.

The Contractor shall provide adequate and competent Security Guards on the site until final completion of the work, or earlier, if so notified in writing by the Contracting Officer. The security service shall commence with the start of the work on site.

Each Security Guard shall be required to possess a “Certificate of Fitness” issues by the NYC Fire Department to qualify and serve as a Fire Guard whenever the structure under construction exceeds the prescribed area and height requirements specified in Rule 2.4.1 of the “Rules for Erection, Alteration, Repair, Excavation for and Demolition of Buildings” adopted by the New York City Board of Standards and Appeals under Calendar Number 784-41SR. Each Security Guard shall, during his/her tour of duty, perform the duties of Fire Guards in addition to security obligations.

Should the Contracting Officer find any Security Guard is unsatisfactory, such guard shall be replaced by the Contractor upon the written demand of the Contracting Officer.

The use of watchdogs as an adjunct to the Security Guards will not be permitted.

76. PUBLIC DISSEMINATION OF INFORMATION

The Contractor agrees that he/she will not publish, cause to be published, or otherwise disseminate any information of whatever nature relating to the work being performed under this contract (design information, as-built drawings, shop drawings, etc.) except as may be approved in writing by the Contracting Officer.

77. DESIGN-BUILD CONTRACT-ORDER OF PRECEDENCE - AUG 1997

(a) The contract includes the standard contract clauses and schedules current at the time of award. It also entails: (1) the solicitation in its entirety, including all drawings, cuts and illustrations, and any amendments during proposal evaluation and selection, and (2) the successful Offeror's accepted proposal. The contract constitutes and defines the entire agreement between the Contractor and the Government. No documentation shall be omitted which in any ways bears upon the terms of that agreement.

(b) In the event of conflict or inconsistency between any of the provisions of the various portions of this contract, precedence shall be given in the following order:

(1.) Betterments/Enhancements: Any portions of the Offeror's proposal which both meet and exceed the provisions of the solicitation

(2.) The provisions of the solicitation. (See also Contract Clause: SPECIFICATIONS AND DRAWINGS FOR CONSTRUCTION.)

(3.) All other provisions of the accepted proposal.

(4.) Any design products, including but not limited to plans, specifications, engineering studies and analyses, shop drawings, equipment installation drawings, etc. These are "deliverables" under the contract and are not part of the contract itself. Design products must conform to all provisions of the contract, in the order of precedence herein.

78. KEY PERSONNEL, SUBCONTRACTORS AND OUTSIDE ASSOCIATES OR CONSULTANTS - AUG 1997

In connection with the services covered by this contract, any in-house personnel, subcontractors, and outside associates or consultants will be limited to the individuals or firms that were specifically identified and agreed to during negotiations. The contractor shall obtain the Contracting Officer's written consent before making any substitution for these designated in-house personnel, subcontractors, associates, or consultants.

79. RESPONSIBILITY OF THE CONTRACTOR FOR DESIGN - FEB 2000

(a) The Contractor shall be responsible for the professional quality, technical accuracy, and the coordination of all designs, drawings, specifications, and other non-construction services furnished by the Contractor under this contract. The Contractor shall, without additional compensation, correct or revise any errors or deficiency in its designs, drawings, specifications, and other non-construction services and perform any necessary rework or modifications, including any damage to real or personal property, resulting from the design error or omission.

(b) Neither the Government's review, approval or acceptance of, nor payment for, the services required under this contact shall be construed to operate as a waiver of any rights under this contract or of any cause of action arising out of the performance of this contract. The Contractor shall be and remain liable to the Government in accordance with applicable law for all damages to the Government caused by the Contractor's negligent performance of any of these services furnished under this contract.

(c) The rights and remedies of the Government provided for under this contract are in addition to any other rights and remedies provided by law.

(d) If the Contractor is comprised of more than one legal entity, each entity shall be jointly and severally liable there under.

80. SEQUENCE OF DESIGN-CONSTRUCTION (FAST TRACK)

(a) After receipt of the Contract Notice to Proceed (NTP) the Contractor shall initiate design, comply with all design submission requirements as covered under Division 01 General Requirements, and obtain Government review of each submission. The contractor may begin construction on portions of the work for which the Government has reviewed the final design submission and has determined satisfactory for purposes of beginning construction. The COR will notify the Contractor when the design is cleared for construction. The Government will not grant any time extension for any design resubmittal required when, in the opinion of the COR, the initial submission failed to meet the minimum quality requirements as set forth in the Contract.

(b) If the Government allows the Contractor to proceed with limited construction based on pending minor revisions to the reviewed Final Design submission, no payment will be made for any in-place construction related to the pending revisions until they are completed, resubmitted and are satisfactory to the Government.

(c) No payment will be made for any in-place construction until all required submitttals have been made, reviewed and are satisfactory to the Government.

81. CONSTRUCTOR'S ROLE DURING DESIGN – JUN 1998

The Contractor's construction management key personnel shall be actively involved during the design process to effectively integrate the design and construction requirements of this contract. In addition to the typical required construction activities, the constructor's involvement includes, but is not limited to actions such as: integrating the design schedule into the Master Schedule to maximize the effectiveness of fast-tracking design and construction (within the limits allowed in the contract), ensuring constructability and economy of the design, integrating the shop drawing and installation drawing process into the design, executing the material and equipment acquisition programs to meet critical schedules, effectively interfacing the construction QC program with the design QC program, and maintaining and providing the design team with

accurate, up-to-date redline and as-built documentation. The Contractor shall require and manage the active involvement of key trade subcontractors in the above activities.

82. GOVERNMENT RIGHTS (UNLIMITED)(DFARS 52.227-7022, Mar 1979)

The Government shall have unlimited rights in all drawings, designs, specifications, notes and all other works developed in the performance of this contract, including the right to use same on any other Government design or construction without additional compensation to the Contractor. The Contractor hereby grants to the Government a paid-up license throughout the world to all such works to which he may assert or establish any claim under design patent or copyright laws. The Contractor for a period of three (3) years after completion of the project agrees to furnish the original or copies of all such works on the request of the Contracting Officer.

83. REQUIREMENTS FOR REGISTRATION OF DESIGNERS (52.236-0025) (Apr 1984)

The design of architectural, structural, mechanical, electrical, civil, or other engineering features of the work shall be accomplished or reviewed and approved by architects or engineers registered to practice in the particular professional field involved in New York State.

……..End of Section……..

US Army Corps of Engineers ®
Norfolk District

http://www.nao.usace.army.mil

New York City Department of Environmental Protection

East of Hudson Administration Building Town of Mt. Pleasant, New York

REQUEST FOR PROPOSAL

DATE: AUGUST 16, 2004

US Army Corps of Engineers ®
Norfolk District

http://www.nao.usace.army.mil

New York City Department of Environmental Protection

East of Hudson Administration Building Town of Mt. Pleasant, New York

REQUEST FOR PROPOSAL

Phase 2

DATE: AUGUST 16, 2004

Statement of Work Contents

Section:		Page:
STATEMENT OF WORK		3
1-	DESIGN OBJECTIVES	3
2-	FUNCTIONAL AND AREA REQUIREMENTS	5
3-	SITE PLANNING AND SITE/UTILITY DESIGN	18
4-	SITE ENGINEERING	20
5-	ARCHITECTURE	28
6-	STRUCTURAL	47
7-	THERMAL PERFORMANCE.	49
8-	PLUMBING.	50
9-	ELECTRICAL	54
10-	HEATING, VENTILATING, AND AIR CONDITIONING.	67
11-	FIRE PROTECTION	78
12-	ENERGY CONSERVATION	80
13-	SUSTAINABLE DESIGN	82
14-	CONTRACTOR PREPARED SPECIFICATIONS	83
APPENDIX A		85

Attachment Contents

Attachment 1 - Art Commission Requirements

Attachment 2 - Furniture Requirements

Attachment 3 - Drawings

Attachment 4 - Technical Specifications

Attachment 5 - Geotechnical information

Attachment 6 - Site Photos

Attachment 7 - Leed Checklist

STATEMENT OF WORK

1- DESIGN OBJECTIVES

1-1 **SCOPE OF WORK.** Design and construction shall comply with the specifications and requirements contained in this Request For Proposals (RFP). The design and technical criteria contained and cited in this RFP establish minimum standards for design and construction quality. The objective of this solicitation is to obtain an administrative facility and associated site improvements, complete and adequate for assignment to the City of New York, Department of Environmental Protection (DEP) staff. This contract shall consist of the design and construction of an administration building and construction of the Solicitation Provided Site/Utility design located at 105 Grasslands Road, Valhalla NY 10595. Design of administration building must be fully integrated with the civil Site/Utility design that is provided as part of this RFP.

1-1.1 **Site Area**. The site is described on the Site/Utility design drawings that are included as part of this solicitation.

1-1.2 **Site Work.** Site work includes the construction of the provided Site/Utility design and features as described, including but not limited to clearing, grading, erosion control, site drainage, utility systems, pavements, pedestrian and vehicular circulation systems, landscaping, physical security measures, fencing, and site furnishings. The Site/Utility design included in this solicitation is a requirement of this solicitation.

1-1.3 Special Utilities and Supplementary Construction. None expected, beyond those included in the attached Site/Utility design drawings and specifications.

1-1.4 Demolition Considerations and Requirements. None expected.

1-1.5 Site/Utility design drawings and specifications shall require further design and details. Successful offeror shall complete the Site/Utility design.

1-1.6 Successful offeror is responsible for obtaining all permits and responsible for all the fees.

1-2 **APPLICABLE CRITERIA**. Applicable design and construction criteria references are listed in Appendix A to the Statement of Work. Criteria shall be taken from the most current references as of the date of issue of the Solicitation. Referenced codes and standards are minimum acceptable criteria. Administrative, contractual, and procedural features of the contract shall be as described in other sections of the Solicitation. In all cases of conflict between the referenced design codes, the New York State Codes shall take precedent.

1-3 **DESIGN QUALITY.** The main objectives of this solicitation are to obtain an administrative facility and associated site construction and to maximize design quality, and achieve the associated Site/Utility development within funds available. Design quality is achieved through the optimization of interior planning, integration of building with the site, sustainability, selection of building systems for low-cost maintenance and operation, and an overall balance of aesthetics and functionality.

1-4 **DESIGN FREEDOM**. The Solicitation requirements, including all drawings must be followed. Design Freedom is defined in the terms of how the concepts are achieved. For example, the concrete portion of the exterior wall may be cast in place or precast as long as the finish provided is architectural in appearance and of suitably durable construction. Guidance Drawing Floor plans may be adjusted slightly to accommodate engineering requirements as long as the functional and adjacency relationship requirements are met. Requirements stated in this Solicitation are minimums. Innovative, creative, or cost-saving proposals, which meet or exceed these requirements are encouraged and will be considered more favorably. Designs may incorporate factory fabricated

components or modules.

1-5 **ENERGY AND RESOURCES CONSERVING FEATURES**. The administration building constructed in response to this solicitation shall be in compliance with the New York State Energy Conservation Construction Code. The successful offeror is responsible for completing and submitting all Energy Code compliance information. Products designed to conserve energy and resources by controlling the amounts of consumed energy or by operating at increased efficiencies should be considered. Minimum requirements for this project are listed in the Statement of Work.

1-6 **NYC ART COMMISSION REQUIREMENTS**. The exterior elevations, materials choices, and colors identified represent a required level of compliance. No variations are permitted. The elevation provided as a definitive sample in the Guidance Drawings has been approved by the NYC Art Commission and represents the ideal exterior elevation scheme for the administration building.

1-7 **TOWN OF MT. PLEASANT SITE PLAN REVIEW BOARD REQUIREMENTS.** Site/Utility design and drawings, features, layout, and landscaping represent a required level of compliance. No variations are permitted. The site plan provided as a definitive sample has been approved by the Town of Mt. Pleasant and represents the ideal site layout and Site/Utility design for the administration building site.

1-8 **ACCESSIBILITY REQUIREMENTS**. The facility is required to be accessible to physically disabled persons and shall conform to the Uniform Federal Accessibility Standards (UFAS) Federal Standard 795, and the Americans With Disabilities Act Accessibility Guidelines (ADAAG).

1-9 **NOT USED**

1-10 **ORGANIZATIONAL STRUCTURE**. NYC DEP staff will occupy the facility designed and constructed under this solicitation. These individuals support the mission of the NYC Department of Environmental Protection and represent a key asset to the City of New York.

2- FUNCTIONAL AND AREA REQUIREMENTS

2-1 GENERAL REQUIREMENTS

2-1.1 **Gross building area definition**. Gross building area is measured to the outside face of exterior enclosure walls.

2-1.2 **Gross area limitations**. There is no specific gross area limitation requirement on this facility, however, a larger facility with less efficient and less cost effective finishes is not desirable. The floor plans provided represent a good approximation of the expected gross floor area.

2-1.3 **Net area definition**. Net area is measured to the inside face of the room or space walls.

2-1.4 **Net Area Requirements**. Net area requirements for programmed spaces are included in the drawings issued with this solicitation. If net area requirements are not specified in the Statement of Work or on the attached drawings, the space shall be sized to: accommodate the required function, comply with code requirements, comply with other requirements of the Solicitation (for example, area requirements for corridors, stairs, and mechanical rooms will typically be left to the discretion of the Offeror). Final net areas shall be within 10% of areas stated on the attached drawings.

2-1.5 **Functionality**. Rooms shall be sized, proportional, and arranged for efficient use, circulation, and furniture placement. Building is required to be accessible to the physically disabled and handicapped throughout.

2-1.6 **Finish Requirements**. See Finish Schedule.

2-1.7 **Furniture Requirements**. Specific requirements are included in Attachments #2 and #3 to this Statement of Work.

2-2 **FUNCTIONAL AND AREA REQUIREMENTS.** The building shall consist of administrative, operating, and support spaces. Building spaces and areas shall be as follows:

2-2.1 **Suspect Areas: (Interview/Interrogation Room 117, Observation/Monitoring Room, Interview Rooms, and Suspect Rooms)**. Minimum net areas are as shown on the included floor plans. See Paragraph 5-7 for Physical Security requirements.

2-2.1.1 Function: Interview witnesses, complainants, and possible suspects and short term holding area for suspects.

2-2.1.2 Adjacency requirements: As shown on the included floor plans.

2-2.1.3 Furnishings/Fixtures/Equipment: As indicated in Attachment 2 & 3.

2-2.1.4 Minimum Finishes: See Finish Schedule.

2-2.1.5 Other requirements: Provide a vandal resistant/tamper resistant "Room-In-Use" light on the outside of each of these rooms. Locate light marked to indicate "In Use" flush with the wall and above the door with the switch outside of room. Room light fixture shall be recessed security type. All fixtures and equipment installed shall be vandal resistant/tamper resistant as suitable for installation in a prison environment. Locate switches, receptacles, thermostats and other items outside the rooms. Ceiling shall be reinforced concrete and tied into the

rooms wall system (see Paragraph 5-7 for Physical Security requirements)

2-2.2 **Suspect Toilet:** (Prisoner Toilet). Provide toilet as shown on the included floor plans. See Paragraph 5-7 for Physical Security requirements.

2-2.2.1 Function: single-occupant toilet and lavatory, for use by suspects.

2-2.2.2 Adjacency requirements: Adjacent to Suspect Rooms.

2-2.2.3 Furnishings/Fixtures/Equipment: Provide a vandal resistant/tamper resistant "Room-In-Use" light on the outside of this room. Locate light marked to indicate "In Use" flush with the wall and above the door with the switch outside of room. Room light fixture shall be recessed security type. Provide one toilet stainless steel combination unit of detention grade, see Para. 5-7. Paper towel dispenser, waste receptacle, soap dispenser, toilet tissue dispenser, and stainless steel sheet mirror. All fixtures and equipment installed shall be vandal resistant/tamper resistant as suitable for installation in a detention environment. Locate switches, receptacles, thermostats and other items outside the room.

2-2.2.4 Minimum Finishes: See Finish Schedule

2-2.2.5 Other requirements: Detention equipment and fixtures shall accessible type.

2-2.3 **Entrance Level Administration and Control Desk: Front Desk 132, and Administration 130)**. Minimum sizes as shown on the included floor plans.

2-2.3.1 Function: Provide space for administrative/reception/access control functions and record keeping.

2-2.3.2 Adjacency requirements: As shown on the included floor plans.

2-2.3.3 Furnishings/Fixtures/Equipment: Below and as indicated in Attachment 2 & 3.

2-2.3.3.1 Front Desk. Provide one 19" TV. (See Attachment 2 Facility Furniture Requirements)

2-2.3.4 Minimum Finishes: See Finish Schedule

2-2.3.5 Other requirements: Administration and Front Desk areas shall be on a Raised Access Floor system. Raised Access Flooring shall be a minimum of 5" and a max of 6" above finished floor, see drawings for the extent of flooring. See 5-5.20 for Raised Access Flooring requirements. Communication service to the building shall be underground. Provide floor openings and vertical shaft spaces as necessary. See section 9-6 for conduit requirements. See mechanical requirements for ventilation and cooling. Areas shall have ballistic rated exterior windows and ballistic windows to all public areas.

2-2.3.5.1 Front Desk. The front desk is the termination point for the Public address system. The front desk serves as a duplicate access control point for control terminals for each of the following systems; Intercom (provide a Master Station Control Unit), CCTV, and control of door locks (Vestibule entrance, exterior doors, garage doors, and Lobby/Hallway). Provide electrical box and conduit from Communications Room to the Front Desk area for each of the systems with a duplicate set access controls. All glazing at the front desk shall be Ballistic rated.

Front Desk requires service window to Lobby Area (a 3' x3' in hollow metal frame with electronic "speak through" device and small stainless steel pass through deal tray). Front Desk shall provide conduit and outlet box rough in for CATV connection and mounting bracket for a 19" TV.

2-2.3.5.2 Administration. Provide Public Address system speaker and locate it remotely from the front desk area where a masterstation is located.

2-2.4 **Conference Rooms: (Conference Rooms; 105, 212, 214, and 217).** As shown on the included floor plans.

2-2.4.1 Function: Meetings, conferences, training.

2-2.4.2 Adjacency requirements: As indicated on the included floor plan.

2-2.4.3 Furnishings/Fixtures/Equipment: Below and as indicated in Attachment 2 & 3.

2-2.4.3.1 Conference room 214. Provide three (3) 37" Flat Screen TVs. (See Attachment 2 Facility Furniture Requirements)

2-2.4.4 Minimum Finishes: See Finish Schedule.

2-2.4.5 Other requirements: Provide dimmers for lighting control.

2-2.4.5.1 Conference room 105, provide minimum 2'-0" deep plastic laminate countertop, with one bowl polished stainless steel bar sink, both wall and base cabinets along entire wall, and location for a coffee station.

2-2.4.5.2 Conference rooms 105, 212, and 217. Provide conduit and outlet box rough in for CATV connection and mounting bracket for a 27" TV.

2-2.4.5.3 Provide conduit and outlet box rough ins for three (3) CATV connections one at each of three (3) wall mounted, wide screen TV mounting brackets.

2-2.5 **Lobby**. Provide as shown on the included floor plans.

2-2.5.1 Function: Primary entry point into the facility; waiting area for visitors.

2-2.5.2 Adjacency requirements: As shown on the included floor plans.

2-2.5.3 Furnishings/Fixtures/Equipment: As indicated in Attachment 2 & 3.

2-2.5.4 Minimum Finishes: See Finish Schedule

2-2.5.5 Other requirements: Space for dedication plaques, literature rack for public information, and an opening & lockable glass enclosed bulletin board.

2-2.6 **Vestibules (Vestibule, Side Vestibule)**. Provide at each exterior entrance to lobby area where shown on the included floor plans.

2-2.6.1 Function: Primary entry point into the facility; weather protection for interior spaces.

2-2.6.2 Adjacency requirements: As shown on the included floor plans.

2-2.6.3 Furnishings/Fixtures/Equipment: As indicated in Attachment 2 & 3.

2-2.6.4 Minimum Finishes: See Finish Schedule

2-2.6.5 Other requirements: Vestibule 100. Provide one intercom remote in-the-wall speaker station located in the exterior wall west of the exterior most vestibule doors

2-2.7 **Armory**. Provide as indicated in the included floor plans. See Paragraph 5-7 for Physical Security requirements.

2-2.7.1 Function: Storage of weapons and ammunition.

2-2.7.2 Adjacency requirements: As shown on the included floor plan.

2-2.7.3 Furnishings/Fixtures/Equipment: As indicated in Attachment 2 & 3.

2-2.7.4 Minimum Finishes: See Finish Schedule

2-2.7.5 Other requirements: Room shall be secure. Provide one intercom remote in-the-wall speaker station located outside room in hallway beside the door. Door shall be alarmed and monitored by the Entrance Level Administration and Control Desk. Ceiling shall be reinforced concrete and tied into the rooms wall system (see Paragraph 5-7 for Physical Security requirements). Provide steel enclosure weapons locker, suitable for storing firearms properly.

2-2.8 **Interior Stairs**. Provide as required to allow circulation from floor to floor, and to comply with applicable code egress requirements.

2-2.8.1 Function: Central vertical circulation for the building. Means of egress.

2-2.8.2 Adjacency requirements: Connects all floors of the building.

2-2.8.3 Furnishings/Fixtures/Equipment: Stairs shall be steel construction with concrete-filled treads, or cast-in-place concrete construction. Open risers are prohibited. Provide decorative trim and detailing to integrate stair into design. Provide painted metal railing or other guardrail system between open stair and adjacent spaces. Provide mechanical and electrical systems to comply with applicable codes.

2-2.8.4 Minimum Finishes: See Finish Schedule

2-2.8.5 Other requirements: All portions of the stair must be non-combustible and meet code requirements for accessibility and clearances.

2-2.9 **Public Toilet Rooms**. A single, public, unisex room is required adjacent to the Lobby as shown on the included floor plans.

2-2.9.1 Function: Private, handicap accessible toilet for use by visitors.

2-2.9.2 Adjacency requirements: Adjacent to entry lobby.

2-2.9.3 Furnishings/Fixtures/Equipment: Floor mounted flush valve toilet; wall hung lavatory; recessed multifold paper towel dispenser, trash receptacle; two roll toilet tissue dispenser; sanitary napkin disposal; liquid soap dispenser; wall mounted mirror over lavatory; wall mounted grab bars at toilet.

2-2.9.4 Minimum Finishes: See Finish Schedule

2-2.9.5 Other requirements: All areas, equipment, and fixtures to be fully accessible.

2-2.10 **Janitor Closet (Janitor Closet, Cleaning Closet)**. Provide where indicated on the included floor plans.

2-2.10.1 Function: Sink, and storage of cleaning supplies.

2-2.10.2 Adjacency requirements: As indicated on the included floor plans.

2-2.10.3 Furnishings/Fixtures/Equipment: Provide floor mop sink, mop rack for three mops, and minimum 3 linear feet of wall mounted stainless steel shelving. Faucet shall have threads to accept hose coupling.

2-2.10.4 Minimum Finishes: See Finish Schedule

2-2.10.5 Other requirements: As indicated.

2-2.11 **Corridors.** (Hallways). Provide as required to allow circulation to building spaces, and comply with applicable code egress requirements.

2-2.11.1 Function: Circulation and means of egress.

2-2.11.2 Adjacency requirements: Adjacent to vertical circulation.

2-2.11.3 Furnishings/Fixtures/Equipment: Provide fire extinguishers in semi-recessed stainless steel fire extinguisher cabinets to comply with applicable codes.

2-2.11.4 Finishes: See Finish Schedule

2-2.11.5 Other requirements: Below and as indicated. Provide Public Address system speakers as required to provide suitable coverage in all hallways on each floor. A person in a hallway shall never be further than 30’-0” from any speaker.

2-2.11.5.1 Corridor 104. Provide a Building Directory to left of the Elevator.

2-2.11.5.2 Corridor 115. Provide an intercom remote in-the-wall speaker station in the exterior wall, at the Suspect Entrance Walkway Bridge, beside the door.

2-2.12 **Offices (SOU Office, SOU Commanding Officer, Sergeant Officer, Duty Sergeant, EEU C. O. Office, Sergeants, Supervisory Sergeants, System Administrator, and all Secretaries Offices other than at the Control Desk).** Minimum sizes as shown on the included floor plans.

2-2.12.1 Function: Provide space for administrative/reception/access control functions and record keeping.

2-2.12.2 Adjacency requirements: As shown on the included floor plans.

2-2.12.3 Furnishings/Fixtures/Equipment: As indicated in Attachment 2 & 3.

2-2.12.4 Minimum Finishes: See Finish Schedule

2-2.12.5 Other requirements: Below and as indicated.

2-2.12.5.1 SOU Office. Provide Public Address system speaker.

2-2.12.5.2 SOU Commanding Officer. Provide conduit and outlet box rough in for CATV connection, and mounting bracket for a 27” TV.

2-2.12.5.3 Duty Sergeant. Provide Public Address system speaker.

2-2.12.5.4 Sergeant Officer. Sergeant Officer room shall be on a Raised Access Floor system. Raised Access Flooring shall be a minimum of 5” and a max of 6” above finished floor, see drawings for the extent of flooring. See 5-5.20 for Raised Access Flooring requirements. Provide Public Address system speaker.

2-2.12.5.5 EEU C. O. Office. Provide conduit and outlet box rough in for CATV connection, and mounting bracket for a 27” TV.

2-2.13 **Executive Offices (Precinct Commanding Officer, Executive Chief, Chief, and Administration 216).** Minimum sizes as shown on the included floor plans.

2-2.13.1 Function: Provide space for administrative/reception/access control functions and record keeping.

2-2.13.2 Adjacency requirements: As shown on the included floor plans.

2-2.13.3 Furnishings/Fixtures/Equipment: Below and as indicated in Attachment 2 & 3.

2-2.13.3.1 Precinct Commanding Officer. Provide one 27” TV. (See Attachment 2 Facility Furniture Requirements)

2-2.13.3.2 Chiefs Office. Provide one 27” TV. (See Attachment 2 Facility Furniture Requirements)

2-2.13.3.3 Executive Chief. Provide one 19” TV and one 27” TV. (See Attachment 2 Facility Furniture

Requirements)

2-2.13.4 Minimum Finishes: See Finish Schedule.

2-2.13.5 Other requirements: Provide conduit and outlet box rough in for a CATV connection, and a mounting bracket for a 27" TV.

2-2.13.5.1 Executive Chief's Office. Provide conduit and outlet box rough ins for two (2) CATV connections one at each of two (2) mounting brackets for one 19" TV and one 27" TV.

2-2.13.5.2 Administration 216. Provide Public Address system speaker.

2-2.14 **Mechanical Areas**. Provide dedicated interior spaces and exterior areas for plumbing, fire protection, and HVAC equipment. Size and locate rooms to allow equipment removal and maintenance. Provide floor openings and vertical shaft spaces as necessary.

2-2.14.1 Function: Mechanical support spaces for the facility.

2-2.14.2 Adjacency requirements: Mechanical support spaces shall not be used for storage or other purposes; access to mechanical spaces will be limited to authorized personnel. Mechanical space may include electrical space as allowed by code.

2-2.14.3 Furnishings/Fixtures/Equipment: As required by Statement of Work, and as indicated in Attachment 2 & 3.

2-2.14.4 Minimum Finishes: See Finish Schedule

2-2.14.5 Other requirements: Locate air intake and exhaust openings to provide optimum indoor air quality (away from exhaust, generators, etc.). Roof mounted equipment shall not be used. Fresh air intake shall enter the building at least 10'-0" above finished grade. Exterior wall louvers shall be rain proof, have insect screens, and include ¾" steel bars 6" oc on the interior. Room shall be heated. Provide masonry screen walls with lockable metal access gates galvanized and painted located around outdoor equipment (refer to Chapter 3). Interior walls shall have an STC 47 rating where adjacent to occupied space. Equipment shall have vibration isolators. Floor mounted equipment shall be on concrete house keeping pads.

2-2.15 **Electrical Spaces**. Provide interior spaces and exterior areas for electrical equipment. Space may be included in the Mechanical Room as allowed by code. Size and locate rooms and doors to allow equipment removal and maintenance. Provide floor openings and vertical shaft spaces as necessary.

2-2.15.1 Function: Electrical support spaces for the building.

2-2.15.2 Adjacency requirements: Locate main electrical equipment room on the basement level. Electrical rooms on upper floors should be located to allow efficient distribution. Size and locate rooms to allow equipment removal and maintenance. Electrical rooms shall not be used for storage or other purposes; access to electrical rooms will be limited to authorized personnel.

2-2.15.3 Furnishings/Fixtures/Equipment: As required by Statement of Work and as indicated in Attachment 2 & 3.

2-2.15.4 Minimum Finishes: See Finish Schedule

2-2.15.5 Other requirements: Electrical service to the building shall be underground. Provide masonry screen walls with lockable metal access gates galvanized and painted located around outdoor equipment (refer to Chapter 3); it is preferable to locate transformer within the screened mechanical equipment area.

2-2.16 **Communications and Server Room**. Provide interior space for communication equipment. Size and locate rooms to allow equipment removal and maintenance. Secure communications (links directly to other DEP facilities) shall go directly to the Communications Room.

2-2.16.1 Function: Telephone and data network support spaces for the building.

2-2.16.2 Adjacency requirements: Locate to allow efficient distribution in Administration Areas. Communication rooms shall not be used for storage or other purposes; access will be limited to authorized personnel. Telephone backboards may be included in the Electrical space.

2-2.16.3 Furnishings/Fixtures/Equipment: As indicated in Attachment 2 & 3.

2-2.16.4 Minimum Finishes: See Finish Schedule

2-2.16.5 Other requirements: Provide dimmers for lighting control. Provide a Raised Access Floor system. Raised Access Flooring shall be a minimum of 5” and a max of 6” above finished floor, see drawings for the extent of flooring. See 5-5.20 for Raised Access Flooring requirements. Communication service to the building shall be underground. Provide floor openings and vertical shaft spaces as necessary. See section 9-6 for conduit requirements. See mechanical requirements for ventilation and cooling.

2-2.16.5.1 Communications Room. Communications Room shall be the termination point for following systems; Intercom System (provide Master Station Control unit), CCTV System, Emergency Generator Remote Monitoring Panel, control of door locks (Vestibule entrance, exterior doors, garage doors, and Lobby/Hallway), Fuel Dispensing System Pump Enable Switch Function Control, building alarms monitoring and remote controls and other security system equipment.
Provide Public Address system speaker.

2-2.17 **Evidence Room**. Provide as shown on the included floor plans. See Paragraph 5-7 for Physical Security requirements.

2-2.17.1 Function: Secure and store evidence.

2-2.17.2 Adjacency requirements: As indicated in the included floor plans.

2-2.17.3 Furnishings/Fixtures/Equipment. As indicated in Attachment 2 & 3.

2-2.17.4 Minimum Finishes: See Finish Schedule

2-2.17.5 Other requirements: Ceiling shall be reinforced concrete and tied into the rooms wall system. Provide a pass thru evidence locker system along corridor wall, see plans for location (see Paragraph 5-7 for Physical Security requirements of the ceiling and evidence locker). Provide Intercom remote in-the-wall speaker station in the hall outside the room beside the door.

2-2.18 **Muster/Squad Rooms: (I D Station, Muster Room, Detective Squad Room, File Copy Room 204)**. Provide as indicated in the included floor plans.

2-2.18.1 Function: Assemble staff for briefings and other instructions.

2-2.18.2 Adjacency requirements: As indicated in the included floor plans.

2-2.18.3 Furnishings/Fixtures/Equipment: Below and as indicated in Attachment 2 & 3.

2-2.18.3.1 Muster Room. Provide one 19" TV. (See Attachment 2 Facility Furniture Requirements)

2-2.18.3.2 Detective Squad Room. Provide one 19" TV. (See Attachment 2 Facility Furniture Requirements)

2-2.18.4 Minimum Finishes: See Finish Schedule

2-2.18.5 Other requirements: Provide ballistic rated exterior windows. Provide STC 47 rated wall construction.

2-2.18.5.1 Muster. Provide conduit and outlet box rough in for CATV connection, and a mounting bracket for a 19" TV.
Provide Public Address system speaker. Locate all items remotely from the suspect areas.

2-2.18.5.2 Detective Squad Room. Provide conduit and outlet box rough in for CATV connection, and a mounting bracket for a 19" TV. Provide Public Address system speaker. All items should be remotely located from the suspect areas.

2-2.19 **Storage Closets: (Closet, and Supply Storage)**. Provide as indicated on the included floor plans, space provided on the plans is the minimum acceptable area required for storage.

2-2.19.1 Function: for storage of coats, supplies, paper, etc.

2-2.19.2 Adjacency requirements: As indicated on the included floor plans.

2-2.19.3 Furnishings/Fixtures/Equipment: As indicated in Attachment 2 & 3.

2-2.19.4 Minimum Finishes: See Finish Schedule

2-2.19.5 Other requirements: All spaces shall have lights.

2-2.20 **Men's Toilet**.

2-2.20.1 Function: Men's toilet and lavatory, for use by staff.

2-2.20.2 Adjacency requirements: As indicated on the included floor plans. Also, inside Men's Locker.

2-2.20.3 Furnishings/Fixtures/Equipment: Provide floor mounted toilet and/or urinal as indicate on plans, wall-hung lavatory, mirror with shelf above lavatory, Paper towel dispenser, waste receptacle, soap dispenser, toilet tissue dispenser, and wall mounted electric hand/hair dryer. Toilet partitions shall be solid color high-density polyethylene panels with non-corrosive hardware. And as indicated in Attachment 2 & 3.

2-2.20.4 Minimum Finishes: See Finish Schedule

2-2.20.5 Other requirements: Floor drain(s) see plans. All areas, equipment, and fixtures to be fully accessible. Exhaust fan. Provide Public Address system speaker.

2-2.21 **Women's Toilet**.

2-2.21.1 Function: Women's toilet and lavatory, for use by staff.

2-2.21.2 Adjacency requirements: As indicated on the included floor plans. Also, inside Women's Locker.

2-2.21.3 Furnishings/Fixtures/Equipment: Provide floor mounted toilets, counter top lavatory, mirror with shelf above lavatory, Paper towel dispenser/waste receptacle, soap dispenser, sanitary napkin disposal, toilet tissue dispenser, and wall mounted electric hair/hand dryer. Toilet partitions shall be solid color high-density polyethylene panels with non-corrosive hardware. And as indicated in Attachment 2 & 3.

2-2.21.4 Minimum Finishes: See Finish Schedule

2-2.21.5 Other requirements: Floor drain(s) see plans. All areas, equipment, and fixtures to be fully accessible. Exhaust fan. Provide Public Address system speaker.

2-2.22 **Shower Areas**. Shower areas shall be as indicated on the attached floor plans. Separate male/female shower areas required as shown on included floor plans.

2-2.22.1 Function: Private shower and dressing room for use by staff.

2-2.22.2 Adjacency requirements: Near toilets and inside men and womens Locker Rooms.

2-2.22.3 Furnishings/Fixtures/Equipment: Provide ceramic tile shower with rod and Anti-Bacterial Shower Curtain. Shower shall have ceramic soap holder and wall mounted grab bar. Drying area shall have bench, four (4x) towel/robe rings, and wall mounted full-length mirror. Provide floor drain at dressing area, and locate outside of circulation path. Anti-Bacterial Shower Curtains shall be used at the entrance to the drying area for privacy, see plans for locations. And as indicated in Attachment 2 & 3.

2-2.22.4 Minimum Finishes: See Finish Schedule

2-2.22.5 Other requirements: Benches. All areas, equipment, and fixtures to be fully accessible.

2-2.23 **Equipment Rooms (Male Equipment Room, Female Equipment Room)**. Provide a separate male and female equipment storage room as indicated in the included floor plans.

2-2.23.1 Function: Equipment storage.

2-2.23.2 Adjacency requirements: As indicated in the included floor plans.

2-2.23.3 Furnishings/Fixtures/Equipment: As indicated in Attachment 2 & 3.

2-2.23.4 Minimum Finishes: See Finish Schedule

2-2.23.5 Other requirements: Provide Public Address system speaker.

2-2.24 **Locker Rooms (Men's & Women's Locker)**. Separate male/female locker rooms are required.

2-2.24.1 Function: lockers for staff.

2-2.24.2 Adjacency requirements: Near toilets and shower areas.

2-2.24.3 Furnishings/Fixtures/Equipment (FFE): Bench Requirement. Lockers. And as indicated in Attachment 2 & 3.

2-2.24.4 Minimum Finishes: See Finish Schedule

2-2.24.5 Other requirements: All areas, equipment, and fixtures to be fully accessible. Provide Public Address system speaker.

2-2.25 **Staff Toilet. (Toilet 216, and EEU Toilet 225).** Provide unisex private toilet room. Room shall be sized to comply with handicap accessibility requirements. Room shall be accessed from administration areas as shown on the included floor plans.

2-2.25.1 Function: single-occupant toilet and lavatory, for use by staff.

2-2.25.2 Adjacency requirements: As shown on the included floor plans.

2-2.25.3 Furnishings/Fixtures/Equipment (FFE): Provide floor mounted toilet, wall-hung lavatory (vanity where indicated on plans), mirror with shelf above lavatory, Paper towel dispenser, waste receptacle, soap dispenser, toilet tissue dispenser, and wall mounted grab bars at toilet. And as indicated in Attachment 2 & 3.

2-2.25.3.1 Toilet 216. Provide ceramic tile shower with rod and shower curtain. Shower shall have ceramic soap holder and wall mounted grab bar. Provide two towel/robe rings, and a wall

mounted full-length mirror. Room will also have 2 lockers.

2-2.25.4 Minimum Finishes: See Finish Schedule

2-2.25.4 Other requirements: Partitions shall have minimum STC rating of 47. All areas, equipment, and fixtures to be fully accessible.

2-2.26 **Kitchen/Lunch Room**. Area shall have countertop with kitchen sink, upright refrigerator, range and oven and microwave oven; comply with handicap accessibility requirements.

2-2.26.1 Function: Sink and space for lunch supplies; for use by staff. Break Area.

2-2.26.2 Adjacency requirements: As shown on included floor plans.

2-2.26.3 Furnishings/Fixtures/Equipment: Provide minimum 2'-0" deep plastic laminate countertop, with two bowl polished stainless steel kitchen sink. Provide wall and base cabinets along entire wall. Provide 22 CF refrigerator/freezer with icemaker. Provide 30" drop-in range/oven in the countertop with matching range exhaust hood above. Provide one CF microwave oven located in specially made wall cabinet. Provide dedicated circuits for the refrigerator, microwave oven, and the range/oven combination. Kitchen sink faucet shall be provided with sprayer. Make provisions for 1 full size drink and 1 full size snack vending machines. Provide 2 dining tables with five chairs each and 1 small table with 2 chairs. And as indicated in Attachment 2 & 3.

2-2.26.4 Minimum Finishes: See Finish Schedule

2-2.26.5 Other requirements: Provide painted gypsum board or painted veneer plaster soffit above wall cabinets. Finish exposed ends of wall and base cabinets. Provide ceramic tile above backsplash and below wall cabinets above countertops. Provide Public Address system speaker.

2-2.27 **Boat and Car Garage.** As indicated in the included floor plans.

2-2.27.1 Function: Storage of staff equipment and vehicles. Inspection of suspect vehicles. Garage shall not be used for maintenance of vehicles.

2-2.27.2 Adjacency requirements: As indicated on plans.

2-2.27.3 Furnishings/Fixtures/Equipment: Area shall be heated. Provide an air compressor with two (2) compressed air stations (see section 8-8 Air Compressor), and (4) over head rolling door type garage doors with motorized electric openers. Provide minimum of (2) water hose bibs. See floor plans and as indicated in Attachment 2 & 3.

2-2.27.4 Minimum Finishes: See Finish Schedule

2-2.27.5 Other requirements: Over head rolling garage doors shall not have exterior key access. Space shall be heated but not cooled. Provide 4 floor drains one for each bay. Outside the garage vehicular bays provide (2) Intercom remote in-the-wall speaker stations, locate one station between each pair of overhead doors in the exterior wall. Inside the

garage provide (1) Intercom remote in-the-wall speaker station beside the pedestrian door at the top of the stairs. Provide Public Address system speaker.

2-2.28 **Exercise Room**. Provide as indicated in the included floor plans.

2-2.28.1 Function: Provide for exercise space for staff and to house exercise equipment.

2-2.28.2 Adjacency requirements: As indicated in the included floor plans.

2-2.28.3 Furnishings/Fixtures/Equipment: Bulletin board, Nautilus machine, 2x treadmill, 8x interlocking exercise mats and as indicated in Attachment 2 & 3.

2-2.28.4 Finishes: See Finish Schedule.

2-2.28.5 Other requirements: Provide conduit and outlet box rough in for CATV connection, and mounting bracket for a 19” TV. Provide an Exhaust fan. Provide Public Address system speaker.

2-2.29 **Fuel Pump Island**. Provide as indicated in the included plans.

2-2.29.1 Function: Fueling of New York City owned vehicles and equipment by authorized staff members. Fuel pump locking controls shall be located at the Front Desk. Pumps are to remain locked unless unlocked for use by staff member at the Front Desk.

2-2.29.2 Adjacency requirements: As indicated in the included plans.

2-2.29.3 Furnishings/Fixtures/Equipment: See

2-2.29.4 Finishes: See included plans.

2-2.29.5 Other requirements: Provide an Intercom remote exterior grade mount speaker station beside the fuel pumps at the fuel pump island.

3- SITE PLANNING AND SITE/UTILITY DESIGN

3-1 **SCOPE OF WORK.** The objective of this solicitation is to obtain an administrative facility and associated site construction, complete and adequate for assignment to the City of New York, Department of Environmental Protection (DEP) staff. Site/Utility design is nearly complete and the site boundaries and project composition are fixed. Based on the graphic and narrative descriptions of site opportunities and constraints provided, the offeror shall verify that the site meets the program requirements.

3-2 **SITE VERIFICATION.** Graphic and narrative descriptions of site opportunities and constraints have been provided in this solicitation. The Site/Utility Design is provided at a level of nearly complete and plans are included in this solicitation indicating the required layout of project features.

3-3 **EXISTING CONDITIONS.** The Offeror shall be provided with a digital copy of the topographic survey for this site by the Government. It is the offeror's responsibility to verify the Government-furnished survey and obtain all additional survey information that may be required for a completed design and construction project. Any discrepancies, which are found in the Government furnished documents, shall be brought to the immediate attention of the Contracting Officer for clarification.

3-3.1 **Station Maps.** Maps of the existing utility distribution systems including commercially owned utilities (i.e.: telephone, cable television, gas, etc.) may be obtained from the local utility companies which service the site.

The locations of existing utilities are shown on the Site/Utility Design drawings. Utility owners and corresponding point of contact are identified in the Site/Utility Design plans and specifications.

The offeror shall scan the construction site with electromagnetic or sonic equipment and mark the surface of the ground where existing underground utilities are discovered. Immediately contact the Contracting Officer if actual conditions vary from the documents.

3-4 **EXCAVATION PERMITS.** The contractor shall obtain approved (required) excavation permits prior to digging. Request for excavation permits shall be in accordance with New York State and local municipal requirements and policies.

3-5 **SITE DEVELOPMENT PLAN.** Provided in Site/Utility Design attached.

3-5.1 **Noise Mitigation.** Not Required.

3-5.2 **Orientation.** Orient the new facility as shown in Site/Utility Design attached.

3-6 **GRADING AND DRAINAGE.** The grading should maintain existing topography while recognizing standard gradients. There should be a balance of the quantity of cut and fill soils which would create a smooth transition of graded areas into the existing natural site. The plan should reflect selective site clearing that preserves groups of trees. Grading should manage site runoff to maintain rate of flow and quantity to pre-construction levels, or reduce site runoff where possible. The principles of positive drainage should be applied to control the conditions that remove rainfall away from facilities and functions as designed in the attached drawings.

3-7 **CIRCULATION AND PARKING.** The vehicular and pedestrian circulation system shall promote safe, efficient movement of vehicles and pedestrians within the site area.

Parking Spaces:
As shown on included plans.

Parking Locations:
As shown on included plans.

Signage:
As shown on included plans.

3-8.1 **Vehicular Circulation.** Vehicular circulation as shown on included plans.

3-9 **LANDSCAPE PLANTING PLAN.** The landscape plan shall be as shown on included plans and in accordance with locally acceptable practices. Planting or seeding shall occur only during periods when beneficial results can be obtained.

3-10 **SPRINKLER AND/OR IRRIGATION SYSTEM.** Not Required.

4- SITE ENGINEERING

4-1 SOILS.

4-1.1 **Soil and Foundation Report (Geotechnical Report).** A preliminary Soil and Foundation Report is provided as part of this RFP in Attachment # 5. The report provides an overview of subsurface conditions as well as many design recommendations, and is furnished for informational purposes only. The offeror to whom this contract is awarded shall review these preliminary results and shall be responsible for performing additional investigations deemed necessary to determine the full extent of subsurface conditions in order to properly complete the design and construct all aspects of the required project. The Contractor shall be responsible for selecting locations and types of additional subsurface explorations and/or testing, and they shall be solely at the Contractor's expense. The Contractor shall submit a project specific geotechnical report, certified by a professional engineer experienced in geotechnical engineering in the project geographic region, to include, but not limited to the following: Description and classification of geologic, soil, rock (extent of boulders) and groundwater conditions; Subsurface profiles, boring logs, and exploration location plans, and summary of laboratory and field test results; Depth to bedrock and necessary over-excavation and replacement with 'cushion fill' for basement foundations; Bearing capacity of soil, 'cushion fill', and rock; Estimated differential and total settlement with supporting calculations; Compaction requirements; Groundwater characteristics and recommendations for necessary temporary (construction) and permanent dewatering, and mitigation measures for foundation or subgrade soils that become unsatisfactory during construction due to moisture; Infiltration and permeability; Erosion and siltation; Surface and subsurface drainage; Soil resistivity, moisture, local seismic conditions and chemistry for cathodic protection. Recommendations from the Contractor-provided site-specific geotechnical conditions report shall be used by the designer while developing the construction plans and specifications, but neither it nor the attached preliminary Soil and Foundation Report shall be incorporated directly into the construction documents, except that all boring logs and laboratory test results shall be directly inserted into the specifications.

4-1.1.1 **Certification.** The offeror and his or her professional geotechnical engineer consultant shall certify in writing that the design of the project has been developed consistent with the site specific geotechnical conditions and with all requirements of this Statement of Work. The certification shall be stamped by the consulting professional geotechnical engineer and shall be submitted with the 100 percent design submission. If revisions are made to the 100 percent design submission, a new certification shall be provided with the new/revised design submission.

4-1.2 **Building Pad Preparation.** After excavation has been performed to the required footing elevation for the ground level of the building, the subgrade shall be proof-rolled as required to obtain the bearing capacity recommended by the site-specific geotechnical conditions report, prior to proceeding with the basement excavation and/or construction. The Offeror shall expect to encounter bedrock during excavation of the building basement and associated utility systems; refer to the attached Soil and Foundation Report. All continuous wall footings, and individual column footings spaced closer than 10 feet from edge to edge, shall bear on either bedrock or on soil, but not on a combination of both. Where bedrock occurs at the proposed footing elevation, it shall be over-excavated to a minimum depth of 12 inches beneath the footing. The replacement 'cushion fill' shall consist of a medium or medium-coarse sand containing between 10 percent and 25 percent by weight passing the No. 200 sieve and compacted to at least 95 percent of maximum density. Backfill for a minimum distance of 12 inches from the face of the basement wall and extending from the top of footing up to within 24 inches of exterior finish grade shall consist of approved granular material containing less than 10 percent by weight passing the No. 200 sieve. The remainder of the basement backfill and required building pad fill shall consist of approved sandy soil from basement excavations or imported granular material containing less than 20 percent by weight passing the No. 200 sieve. The native silty sand and sandy silt materials

are very moisture sensitive, and the Offeror shall expect these materials to require careful moisture conditioning as necessary to obtain the required compaction The selection and associated costs for materials, labor, and time, for the use of excavated versus imported material, shall be borne solely by the Offeror.

Backfill, for a minimum distance of 12 inches from the face of the basement wall and extending from the top of footing up to within 24 inches of exterior finish grade, shall consist of approved granular material containing less than 10 percent by weight passing the No. 200 sieve. The remainder of the basement backfill and required building pad fill shall consist of approved sandy soil obtained from basement excavations or imported granular material containing less than 20 percent by weight passing the No. 200 sieve. The native silty sand and sandy silt materials are very moisture sensitive, and the Offeror shall expect these materials to require careful moisture conditioning as necessary to obtain the required compaction. The selection and associated costs for materials, labor, and time, for the use of excavated versus imported material, shall be borne solely by the Offeror.

4-1.3 **Soil Compaction.** Soil compaction shall be achieved by equipment approved by a professional geotechnical engineer, except that compaction of backfill within 10 feet of basement walls and retaining walls shall be performed only with hand-operated vibratory compactors or similar approved lightweight equipment. Material shall be moistened or aerated as necessary to provide the moisture content that will readily facilitate obtaining the compaction specified with the equipment used, and shall be placed in maximum 8-inch thick loose lifts when roller compacted and maximum 6-inch thick loose lifts when compacted with hand-operated equipment. Compact each layer, unless otherwise specified within this Chapter, to not less than the percentage of maximum density specified in Table 4-1, determined in accordance with ASTM D 1557, Method D. Where a dual listing (e.g. 92/95) is provided in the table, the first listed density applies to native excavated soils, and the second listed density applies to imported materials.

TABLE 4-1 Soil Compaction

Subgrade Preparation, Fills, Embankments, and Backfills	Compaction Requirements (Percentage of Maximum Density)
Structures & Building Slabs	92/95
Streets, Paved Areas, Bike Paths	92/95
Sidewalks	90/92
Grassed Areas	85/90

The requirements shall be verified or modifications recommended by the consulting professional geotechnical engineer in the report wherever engineering, soils, or climatic factors indicate the necessity. Any modification to the stated compaction requirements shall require the approval of the Contracting Officer.

4-1.4 **Capillary Water Barrier.** A capillary water barrier consisting of an 8-inch thick layer of ASTM C 33 Size No. 57 coarse aggregate or approved equivalent is required for all interior slabs on grade, including garages and storage rooms. Compaction shall be by a minimum of 3 passes of a minimum 500-lb vibratory-plate compactor or approved equivalent roller.

4-1.5 **Groundwater.** The attached Soils and Foundation Report indicates that groundwater shall

be expected when performing the basement excavation, and after building occupancy. The Offeror shall include in the contract drawings and specifications temporary dewatering during construction and permanent drainage/dewatering of the building foundation. Basement walls shall be waterproofed. Required permanent foundation drains shall be properly daylighted or shall discharge directly into the storm collection system. All basement wall and foundation backfill and capillary water barrier materials connected to the foundation drainage systems shall be completely separated from adjacent soils with a non-woven geotextile fabric having an apparent opening size no larger than a U.S. Sieve No. 70.

4-1.6 **Soil Treatment.** Soil shall be treated for termite protection below the slab and around the perimeter of the building. Treatment shall carry a 5-year non-prorated warranty.

4-1.7 **Decay Treatment.** Decay treatment shall apply to the following: any exposed wood surfaces.

4-1.8 **Radon Mitigation.** Shall not be required.

4-1.9 **Changed Conditions.** As noted in paragraph 4-1.1, the geotechnical report in the RFP is for informational purposes and the offeror awarded the contract is responsible for conducting his or her own project specific geotechnical investigation and report. If the contractor encounters conditions significantly different than provided in the RFP, the contractor shall notify the Government with the submission of the contractor project specific geotechnical report. The Government shall evaluate the notification to determine if a Changed Condition exists prior to the approval to initiate construction.

4-2 **EROSION AND SEDIMENT CONTROL.** Erosion and Sediment Control Facilities shall be required in accordance with requirements of New York State and local authorities having jurisdiction. An erosion and sediment control plan must be approved and permit issued prior to any site disturbance including setup of temporary facilities.

4-2.1 Erosion and Sediment Control Plan. Provide an Erosion and Sediment Control Plan in accordance with The New York Guidelines for Urban Erosion and Sediment Control. Plan shall include a construction sequence and associated details that comply with all applicable state and local regulations shall be provided. Due to high ground water, dewatering methods shall be included in the erosion control plan.

4-3 **DEMOLITION.** None anticipated.

4-4 **CLEARING AND GRUBBING.** Clear and grub all trees and vegetation except as indicated on the plans. All timber removed from the site shall become the property of the Contractor. Chipping material for mulch is acceptable.

4-4.1 Clear and Grub vines and grasses, as well as clean the existing stonewall to remain along Route 100C. Place a barrier around all existing red maple and other mature trees along Walker Road to prevent damage or destruction. Barriers and protection shall include red maples and mature trees between the project limits line and Walker Road.

4-5 **WETLANDS.** Jurisdictional tidal and non-tidal wetlands have not been identified on the project site.

4-6 **EARTHWORK.** The contractor is responsible for obtaining subsurface soil information for design purposes. It is anticipated that engineered fill will be required to build up specific sites to accommodate the new DEP Administrative facility.

4-7 **BORROW MATERIAL.** Obtain borrow material required for construction from sources off site.

4-8 **WATER DISTRIBUTION SYSTEM.** The water distribution system shall be in accordance with the New York State building codes as well as DEP regulations, local requirements, and the RFP documents. Where the requirements of the agency having jurisdiction and the requirements defined herein disagree, the more stringent shall apply. The contractor shall determine the domestic and the fire demands for the facilities and shall verify the design of all components of the domestic supply systems.

4-8.1 **Building Connections.** Design and construction shall be in accordance with the International Plumbing Code (IPC) 2000 or latest edition, local requirements and the New York State Building Codes, whichever is more stringent.

4-8.2 **Materials.** Materials for the water distribution system shall be in accordance with the IPC. Copper water service lines will be dielectrically isolated from ferrous pipe. Dielectric isolation shall conform to IPC requirements. For ductile iron piping systems (except for ductile iron piping under floor in soil) conduct an analysis to determine if cathodic protection and/or bonded or unbonded coatings are required. Unbonded coatings shall conform to the IPC.

4-9 **SANITARY SEWERAGE SYSTEM.** The design of the sanitary sewer distribution system shall be in accordance with the IPC, local requirements, and New York State Building Codes. The contractor shall determine the sewerage contribution for the facilities and shall verify the design of all components of the sanitary sewer system.

4-9.1 **Trenches.** Sewer and water lines, mains or laterals, shall be placed in separate trenches. The separate trenches shall maintain a minimum lateral separation of 10 ft.

4-9.2 **Minimum Sewer and Water Distribution Pipe Separation Requirements.** Parallel water and sewer pipe and crossings between water and sewer pipe shall be in accordance with the IPC.

4-9.3 **Cover.** Sewer lines shall be located at a depth greater than the frost penetration for the specific site. Coordinate with building connection requirements. To prevent the pipe from being crushed by construction vehicles and the design vehicle, the minimum cover above the top of pipes shall be 30 inches unless pipe materials are used and/or unless the pipe is concrete encased with a minimum of 6 in thickness of concrete.

4-9.4 **Field Quality Control for Sanitary Sewer Distribution System.** The contracting officer will conduct field inspections and witness field test specified. The contractor shall perform field tests, and provide labor, equipment, and incidentals required for testing. Water needed for field tests will not be furnished by the government. For force mains, do not begin testing on any section of a pipeline where concrete thrust blocks have been provided until at least 5 days after placing of the concrete. Testing procedures and requirements shall comply with the IPC and New York State building codes.

4-10 **STORMWATER MANAGEMENT SYSTEMS.** All Stormwater discharges to Westchester County MS4 (Municipal Separate Storm Sewer Systems). Obtain required permits from Westchester County, the state of New York, and agencies having jurisdiction prior to construction. A Stormwater Pollution Prevention Plan (SPPP) shall be completed and approved by New York State Department of Environmental Conservation (NYSDEC) prior to any soil disturbance on project site.

4-10.1 Stormwater Pollution Prevention Plan (SPPP). Provide a Stormwater Pollution Prevention Plan in accordance with NYSDEC General Permit 02-01. Submit Plan to the New York City Department of

Environmental Protection Bureau of Water Supply's Division of Engineering Project Review Group for approval 30 days prior to submission to NYSDEC for final approval. Plan shall include but not be limited to the following provisions: Afore mentioned Erosion and Sediment Control Plan. An Inspection and Maintenance Plan for the temporary and permanent stormwater practices. Control of the peak discharge from the 10 year an 100 year storm to pre development rates. Calculations demonstrating that any ponds utilized are able to detain the 1year, 24-hour storm event for 24 hours, using center of mass method. Calculations demonstrating that the post development peak flows from the site for the 10 and 100 year, 24 hour storm events meet pre-development discharge rates.

4-11 **STORM DRAINAGE COLLECTION SYSTEMS AND GRADING.** The design of the storm drainage system shall be in accordance with the IPC, local regulations, and the New York State Building Code. The Contractor shall determine the drainage requirements and shall verify the design provided.

4-11.1 The contractor shall evaluate the upstream drainage area to ascertain its impact on the DEP facility project site. This evaluation may require the services of a commercial Hydrological/Hydraulic Engineering firm or engineer. The analysis shall indicate the flow volume of stormwater run-off through the project location and its potential impact on the downstream (of project) area. A determination shall be made as a part of this analysis whether improvements will be required in the downstream area to pass the design storm flow volume safely without property damage. The costs for such services shall be borne by the contractor and shall be reflected in his/her response to this solicitation.

4-12 **PERMIT REQUIREMENTS.** Timely acquisition of all the necessary permits shall be the responsibility of the Contractor; including the erosion and control permit, storm water management permit, discharge permit, air permit and the health department permit(s). Operating permits and licenses shall be the responsibility of the Contractor, in accordance with Section 00721, "Contract Clauses". Timely acquisition of all the necessary design and construction related permits shall be the responsibility of the contractor. As some permit process times take 6 months or more, the Contractor, upon notice to proceed, shall immediately begin working on the permits so as not to delay completion of the project.

4-13 PAVEMENT DESIGN CRITERIA. See attached Geotechnical Report and Civil engineering documents.

4-14 **GAS DISTRIBUTION SYSTEM**. The design of the natural gas system shall be in accordance with the IPC, local requirements, New York State Building Code and the RFP documents. The contractor shall determine the gas requirements of the facility and the complete the design provided.

4-14 **HEATING HOT WATER AND CHILLED WATER DISTRIBUTION.** Not Applicable.

4-15 **STEAM AND CONDENSATE RETURN, HIGH TEMPERATURE HOT WATER DISTRIBUTION.** Not Applicable

4-16 **FUEL (UNLEADED REGULAR) STORAGE AND DISTRIBUTION.** See Chapter 10.

4-17 **LIQUEFIED PETROLEUM (LP) GAS STORAGE AND DISTRIBUTION.** LP gas tanks shall comply with requirements of NFPA 58 and the ASME Code, Section VII, Pressure Vessels. Tanks shall be pad mounted underground, and shall not be located inside any building. Pad shall be reinforced concrete sized to balance buoyant forces with all tanks empty. Tanks shall be provided with all required gauges, shut off valves, safety devices, and suction connections. Shut off valves shall be installed at each tank, at the service entry to the building (if not in sight of the tank), and at each heating unit. No shut off valve shall be installed between a safety device and tank. LP gas

pressure shall be reduced to a maximum service pressure of ½ psi prior to the building entrance. LP gas pipe connectors shall be in accordance with UL 567. Valves and controls shall be tamper resistant.

4-17.1 LP Tank(s). Facility shall be provided with ASME LP Tank(s) for operation of the emergency generator and boiler heating system and shall be designed to provide 2 days of continuous full load operation of the generator and separately sized to provide heating fuel needs of the facility for the coldest 30 day period of usage. Tank(s) shall be underground. Tank(s) shall be linked with separate manifolds to supply the generator and the boiler heating system as a secondary source to natural gas.

4-18 **ELECTRICAL SITE UTILITIES.** The contractor shall be responsible for coordination with the local utility suppliers of Power, Telephone, and Cable Television to coordinate connection and interface requirements. All fees, connection costs, and other associated costs shall be the responsibility of the contractor. Separate or additional billing for these costs will not be allowed. See RFP utility design and location. The contractor shall evaluate and complete the site utility design.

4-18.1 **POWER.** Power the new facility shall be obtained from the local power utility serving each site. Project exterior electrical distribution design shall consist of coordinating with the local power utility, obtaining necessary permits, and providing required design and construction to connect to existing utility to provide the required power to each facility. Power on the site shall be run underground. Building service transformer shall be located a minimum of 25 feet from the building. Secondary conductors from the facility transformer shall be run underground into building and stubbed up into electrical service equipment in the Mechanical/Electrical Room. This room shall be sized to accommodate mechanical equipment and the required electrical equipment. POC for the local power utility is Consolidated Edison***.*** Provide power and control wiring in underground conduit to all exterior equipment such as emergency generator, area lighting, fueling station, pop-up bollards, etc. Coordinate exact wiring requirements with equipment to be provided.

4-18.1.1 Service entrance. Shall be in accordance with NFPA 70.

4-18.2 **EXTERIOR LIGHTING.**

4-18.2.1 Parking Lot and Vehicular Circulation Drive Lighting. Parking lots and driveways shall be illuminated using photocell/time switch controlled, high pressure sodium (HPS), pole-mounted, sharp-cutoff distribution, shoebox-type luminaires. Parking lot lighting design shall provide an average intensity of 0.5 (one-half) foot-candle (maintained) with a uniformity ratio of 4:1 (avg. to min.). Poles shall be anodized bronze finish on aluminum. Pole installations shall be designed to withstand a basic wind velocity of 90 MPH with a 1.3 gust factor. No concrete pedestals permitted.

4-18.2.2 Monument and flag lighting. Provide lighting for memorial plaque/monument at front entrance and each flag illumination. Lighting shall be photocell/time switch controlled, metal halide type, 2 (two) foot-candles (maintained) with a uniformity ratio of 4:1 (avg. to min.)

4-18.2.3 Security lighting. Provide illumination for areas monitored by exterior CCTV security cameras. Luminaires shall be metal halide type. Lighting design shall provide an average intensity of 2 (two) foot-candles (maintained) with a uniformity ratio of 4:1 (avg. to min.).

4-18.2.4 **TELEPHONE**. The Contractor shall coordinate with the local telephone utility serving the site and provide required design and construction to connect to existing utility to provide the required telephone. Service cables on the site shall be run underground to each new facility within the project boundaries. Alternate Service Wiring Connection (AWSC) shall be provided from a

second location to create redundant phone service to the facility. A total of 40 incoming lines are required. POC for the local telephone utility is ***VERIZON.***

4-18.2.5 **CABLE TELEVISION**. The Contractor shall coordinate with the local cable television utility serving the site and provide required design and construction to connect to existing utility to provide the required cable television. Service cables on the site shall be run underground within the project boundaries. POC for the local cable television utility is ***CABLEVISION.***

4-19 CATHODIC PROTECTION. Cathodic Protection (CP) is mandatory on buried ferrous metallic structures as described below:

4-19.1 Department of Transportation guidance. Shall be as stated in 49 CFR, Part 192, requires that all metallic natural gas piping be coated and cathodically protected regardless of the soil resistivity.
4-19.2 Corrosion control. Mandated for all metallic underground storage tanks storing petroleum or hazardous substance by 40 CFR, Part 280 and AR 200-1 and on hazardous liquid pipelines (e.g., liquid fuel) by 49 CFR, Part 195.

4-19.3 Design requirements. CP systems must be designed to provide protective potential to meet the requirements of the National Association of Corrosion Engineers (NACE) Standard RP-0169, Control of External Corrosion on Underground or Submerged Metallic Piping Systems, or NACE Standard RP-0185, Control of External Corrosion on Metallic Buried, Partially Buried, or Submerged Liquid Storage Systems, as appropriate.

4-19.4 Compatibility. New or supplemental CP systems shall be compatible with existing CP systems and other adjacent structures or components. New systems shall be compatible with existing systems to allow ease of repair and maintenance.

4-19.5 Tracer wire. When plastic pipe is used to extend a steel distribution main, an insulated No. 8 AWG copper wire shall be exothermically welded to the existing steel main and run the length of the new plastic main. This wire can be used as a locator tracer wire and to maintain continuity to any future steel main extension.

4-19.6 Coatings. CP and protective coatings shall be provided for the following buried and submerged ferrous metallic structures regardless of soil or water resistivity.

4-19.6.1 Propane piping.

4-19.6.2 Underground ASME LP storage tanks.

4-19.6.3 Ductile or cast iron piping. Required for pressurized piping under floor (slab on grade) in soil.

4-19.6.4 Not Used.

4-19.6.5 Cast iron pipe. Shall be treated as follows:

4-19.6.5.1 Below 10,000 Ohm-cm: For soil resistivity below 10,000 Ohm-cm at pipeline installation depth, provide CP, bonded joints, and protective coatings.

4-19.6.5.2 Between 10,000 and 30,000 Ohm-cm: For soil resistivity between 10,000 and 30,000

Ohm-cm at pipeline installation depth, provide bonded joints only.

4-19.7 Copper water service lines: Piping will be dielectrically isolated from ferrous pipe. Dielectric isolation shall conform with NACE RP-0286.

4-20 Ductile iron piping systems: Conduct an analysis (except for ductile iron piping under floor in soil) to determine if CP and/or bonded or unbonded coatings are required. Unbonded coatings are defined in ANSI/AWWA C105/A21.5.

4-21 Economic analysis: Conduct an economic analysis to determine if CP and protective coatings should be provided for gravity sewer lines and the following structures in soil resistivity conditions above 10,000 Ohm-cm:

4-21.1 Potable water lines.

4-21.2 Concentric neutral cable.

4-21.3 Other structures. Buried and submerged ferrous metallic structures not covered above.

4-21.4 Contact with concrete. Ferrous metallic piping passing through concrete shall not be in contact with the concrete.

5- ARCHITECTURE

5-1 **DESIGN GOALS.** Overall architectural goal for the administration building is to provide durable, functional, visually appealing facility that is a source of pride for the locality, other users, and the NYC DEP. The exterior design presented in this Solicitation has been approved by the New York City Art Commission. The Site/Utility design presented in this Solicitation has been approved by the Town of Mount Pleasant. Design submittals are required as described in Design After Construction.

5-1.1 **Exterior Campus and Site Design**. This solicitation includes a nearly complete Site/Utility design with site plans, site electrical & lighting design, and a landscape plan, which shall be followed by the Offerors These plans shall be used as the basis for a complete design submittal and may be modified in minor ways to facilitate final construction and complete the detailing of the facility.

5-1.2 **Interior Design Objectives**. Use interior surfaces that are easy to clean and light in color; avoid trendy or bright color schemes. This solicitation includes floor plans for space arrangement, which shall be followed by the Offerors. These plans shall be used as the basis for the design submittals and may be modified in minor ways to facilitate final construction and detailing of the facility.

5-1.3 **Material and Product Selection Criteria**. Materials shall meet the requirements of the SOW. The SOW includes a range of specificity: some material requirements are specific (no option); other material requirements allow a range of options. The SOW requirements establish a minimum quality level. Higher quality materials will be evaluated more favorably. The Offeror's proposal shall identify the quality level of all major materials to be provided.

5-2 **APPLICABLE CODES AND STANDARDS**. Except as specified otherwise in the RFP, design and construction of facilities shall comply with the latest editions (as of the date of the RFP) of the following. Major criteria references for building design are listed below; additional requirements are included throughout the RFP. Refer to Appendix A for a list of criteria references, and sources of availability.

5-2.1 New York State Building Codes

5-2.2 New York State Uniform Fire Prevention Code; NYCRR 9b, latest edition.

5-2.3 National Fire Codes, published by the National Fire Protection Association (NFPA), including NFPA 101 Life Safety Code.

5-2.4 International Building Code (IBC).

5-2.5 Federal Std 795 Uniform Federal Accessibility Standards (UFAS), and Americans With Disabilities Act Accessibility Guidelines for Buildings and Facilities (ADAAG). Where these criteria conflict, the most stringent requirement shall apply.

5-3 OCCUPANCY AND BUILDING TYPE CLASSIFICATIONS.

5-3.1 **General**. Occupancy classifications, construction types, allowable areas, maximum building heights, and fire separation requirements shall comply with the requirements of the New York State Building Code.

5-3.2 **Administration Building.** Occupancy classification: Business Group B. Construction type: Any type allowed by code for this building use.

5-4 EXTERIOR DESIGN.

5-4.1 **Acceptable Materials and Colors**. Exterior elements of the facilities shall comply with the requirements and as indicated Attachments 1, 2, and 3.

5-4.2 **Exterior Walls**. Exterior walls shall be concrete and brick masonry as indicated in the drawings.

5-4.3 **Masonry**. Brick shall be Belden Bismarck Blend (Ironspot) for the field and Belden 671 Smooth (red) for the accent brick. Exterior walls may be Brick or Tilt-up brick precast panels and shall be used to achieve the desired aesthetic effect represented by elevation drawings attached to the RFP. Work shall comply with the Brick Institute of America guidelines. Masonry shall be anchored to the structure with adjustable wall ties secured to studs. Steel lintels shall be painted hot dipped galvanized steel. Concrete masonry units shall be used as indicated on the plans, may be lightweight units, shall have grout filled cells, and shall be reinforced with joint reinforcing and steel bars as required. Concrete masonry lintel units shall be used over openings in CMU walls.

5-4.3.1 **Precast brick Tilt Up panels.** Provide Architectural Precast brick Tilt Up wall panels in compliance with the National Precast Concrete Association (NPCA) and Tilt-Up Concrete Association (TCA). Veneer “thin” brick shall be embedded in the precast concrete panels complying with color and aesthetic requirements above. Precast Panels shall comply with the latest editions of American Concrete Institute (ACI) 304, (ACI) 318, Concrete Reinforcing Steel Institute (CRSI) Manual of Standard Practice, and applicable (ASTM) Standards.

5-4.4 **Concrete**. Concrete color shall be equal to Arriscraft Olive. Concrete may be Poured-in-place or Precast panels and shall be used to achieve the desired aesthetic effect represented by elevation drawings attached to the RFP.

5-4.5 **Moisture Protection**. Stud framing shall be sheathed with a moisture resistant, fiberglass faces gypsum-sheathing board. All vertical joints shall be taped. Sheathing shall be covered with an infiltration barrier such as Tyvec. All openings shall be flashed with a rubberized membrane such as WR Grace Bituthane. All masonry, cast in place concrete, precast, windows, and doors shall be flashed with a flexible metal flashing. Walls below grade shall be waterproofed with a rubberized adhesive type membrane, covered with protection board and drained by a continuous perimeter footing drain.

5-4.6 **Sealant**. Sealants shall be compatible and as recommended by the manufacturer of the items being sealed. Sealant at masonry and precast shall be a one or two part urethane and shall closely match the color of the material. Sealant at window and doorframes shall be a

one or two part urethane and shall closely match the color of the frame material. Interior joint sealant shall be silicone and be clear or match the surface being sealed.

5-4.7 **Termite Protection**. Soil shall be treated for termite protection below the slab and around the perimeter of the building. Treatment shall carry a 5-year non-prorated warranty.

5-4.8 **Roof**. Roofing system shall include the entire roof system. The system shall be a complete standing seam metal roof system consisting of; finished factory formed panels, fasteners, slip sheet, insulation, vapor retarder, all accessories, components, and trim. Provide minimum 30# felt underlayment. Provide self adhering rubberized ice and water shield underlayment at all valleys, and roof perimeter. Roofing system shall have Underwriters Laboratory (UL) Class A rating for fire resistance, UL 90 wind resistance rating, and Factory Mutual (FM) 1-90 fire and wind resistance rating. Roof panel and trim shall have no exposed fasteners. Roofs shall have roof manufactures snow guards located at entrances, exits and sidewalks and shall be mechanically attached (without penetrations) to metal roof ribs. Provide soffit/ridge ventilation.

5-4.8.1 **Standing Seam Metal Roofing**. Standing seam metal roofing shall be “Energy Star” compliant. Metal roofing product shall have a clear polyvinylidine fluoride (PVF2) coating offering a minimum 20-year finish warranty. Color shall be equal to Englert Perma color Preweathered Galvalume. Roof panels shall be curved and have a true standing seam profile. Mechanically seamed standing seam panels shall be Englert A1300 or equal.

5-4.8.2 **Metal Fascia/Soffits, Trim and Flashing.** Trim and flashing shall match roof panels. Materials and colors shall comply with the requirements and of Attachment 1 and 3. Gutters, fascias, soffit, and trim shall be prefinished metal to match the roof; comply with SMACNA Architectural Sheet Metal Manual; provide 20-year manufacturers finish warranty. Fascia/Soffit shall be at least 24 gauge Galvalume metal with Kynar based paint finish, smooth finish, with no exposed fasteners. Continuous wood backing shall support fascia. Fascia and soffit shall be a composite material such as Alucabond.

5-4.9 **Miscellaneous Exterior Elements**. As required to suit the required exterior elevations. All exterior materials shall comply with the requirements and Attachments #1 & #3.

5-4.10 **Signage**. Exterior signage shall comply with the requirements indicated in Attached Drawings.

5-4.11 **Exterior Doors and Frames**. Doors shall be 3’-0” wide in single or pairs unless otherwise indicated. Door height shall be custom to meet requirements of the design but in no case less than 7’-0”.

5-4.11.1 **Aluminum Storefront Doors & Frames**. Aluminum storefront doors and frames shall have AAMA 2605 organic coating finish. Color shall comply with Attachment 1. Doors shall be minimum 1-3/4” thick. Fully glazed stile and rail doors shall be medium or wide stile. Provide aluminum storefront systems that comply with wind load requirements of applicable codes. Framing systems shall have thermal-break design. Doors and surrounding storefront shall have divided lites as indicated on drawings. System shall be custom to provide the appearance indicated in the attached drawings and rendering.

5-4.11.2 **Exterior Hollow Metal Doors**. Exterior Hollow metal doors and frames shall be insulated (R-5) hollow metal; comply with ANSI A250.8/SDI 100. Doors shall be Level 3,

physical performance Level A, Model 2; insulated; top edge closed flush. Frames shall be Level 3, 14 gauge, with continuously welded corners and seamless face joints. Doors and frames shall be constructed of hot dipped zinc coated steel sheet, complying with ASTM A653, Commercial Steel, Type B, minimum A40 coating weight; factory primed, and field painted. Anchors (minimum 3 per jamb) and accessories shall be zinc coated. Frames in masonry shall have bituminous back-coating, plaster guards, and shall be grouted solid. Fire-rated openings shall comply with NFPA 80 and 101, and the requirements of the labeling authority.

5-4.11.3 **Garage Doors**. Garage doors shall be sectional panel overhead rolling doors. Garage doors shall be painted galvanized (all surfaces) steel insulated sandwich panel. Garage doors interior surfaces shall be painted galvanized metal (all surfaces). The manufacturer shall list door and hardware as heavy duty. Doors shall be weather-stripped at all edges. Doors shall be electronic locking and motor operated from the interior. Provide controls and locking inside with individual door control panels beside each door inside the garage and 2 master control stations, one at the pedestrian door to the building corridor in the garage, and one in the monitoring and control station at the Front Desk. Individual panel controls at each door shall have three button door control and 4th rotary lock switch control.

5-4.11.4 **Exterior Door Finish Hardware**.

5-4.11.4.1 **Finish.** All exterior door hardware shall be polished stainless steel or chrome plated non-ferrous metal.

5-4.11.4.2 **Hinges**. ANSI/BHMA A156.1; template, full mortise, heavy duty, ball bearing, minimum size 4 ½" x 4 ½ ", non-ferrous base metal, non-removable pins.

5-4.11.4.3 **Locksets on Exterior Hollow Metal Doors**. ANSI/BHMA A156.2; series 4000, Grade 1, non-ferrous base metal, removable core. Handles shall be lever type. See Finish Schedule for lock functions.

5-4.11.4.4 **Closers**. ANSI/BHMA A156.4; series C02000, Grade 1, hydraulic, factory-sized, adjustable to meet field conditions. Provide as required by code.

5-4.11.4.5 **Auxiliary Hardware**. ANSI/BHMA A156.16. Provide other hardware as necessary for a complete installation.

5-4.11.4.6 **Thresholds**. ANSI/BHMA A156.21; non-ferrous metal. Provide at all exterior doors.

5-4.11.4.7 **Weatherstripping**. ANSI/BHMA A156.22.

5-4.11.4.8 **Kick Plates**. ANSI/BHMA A156.6; non-ferrous metal. Provide at all hollow metal doors with closers.

5-4.12 **Exterior Windows**. Provide aluminum windows complying with American Architectural Manufacturers Association AAMA/NWWDA 101 / I.S. 2. Minimum performance class shall be Heavy Commercial (HC). Minimum wind load, and resulting design pressure and performance grade shall be determined in accordance with the International Building Code (IBC). Provide windows with insulating glass and thermal break necessary to achieve a minimum Condensation Resistance Factor (CRF) of 45. Finish shall be AAMA 2605 organic

coating. Paint finish shall be manufacturer's premium paint, color as indicated in Attachment 1. Windows shall match exterior elevations provided. Perimeter frame shall have a face width of 3 – 3.5 inches. Glass bite shall be 1" minimum. Windows shall be fixed sash.

5-4.12.1 **Exterior Glass and Glazing**. Glazing shall be a minimum of 1" insulated, tinted, reflective units with a U value of .95 - .99. Inner pane of insulated glass assemblies in exterior windows and doors shall be minimum 1/4-inch laminated glass. See attachment 1 for color of glazing. Interior glass at the front desk, Administration Room, Muster room, and Vision Light at door 103 shall be bulletproof. Ballistic rated shall mean ballistic rated laminated glazing with a rating value for 9 mm (3 shot) using UL 752 test method. Laminated glass for exterior windows shall have a .030 Polyvinyl-butyral interlayer

5-4.13 **Thermal Insulation**. Provide exterior wall, floor, and roof/ceiling assemblies with thermal transmittance (U-values) required to comply with the proposed energy calculations for the facilities. Insulation shall not be installed directly on top of suspended acoustical panel ceilings. The thermal insulation shall be a continuous envelope without voids or cold spots. All thermal bridges shall be insulated. A continuous vapor retarding membrane shall be provided at all exterior walls and ceilings.

5-4.14 **Exterior Noise Control**. Not Applicable.

5-4.15 **Flagpoles**. Provide two (2); 20FT high and one (1) 25FT high center pole External Halyard-Ground Set Cone Tapered, Architectural Series, Aluminum Flagpoles, with clear anodized aluminum finish. Pole should be designed to support a 5' x 9'-6" flag for site wind conditions. Provide Gold Anodized Aluminum Ball Ornament, Cast Aluminum Revolving Truck w/ Pulley, Solid Braided Polypropylene Halyard, Swivel Flag Snaps w/ Vinyl Snap Covers, Cast Aluminum Cleat with Mounting Screws, Spun Aluminum Flash Collar, and Galvanized Steel Foundation Sleeve. Include flagpole manufacturers second Cleat configuration, Halyard cover, and Cleat covers. Comply with attached drawings for Flag Pole locations. Provide ground level recessed flood lighting for each flagpole.

5-4.16 **Monument.** Provide a Monument to the First Provisional Regiment of the New York Guard. Provide semi-circular stonewall with a granite stone monument at its center as shown on the drawings. Stonewall shall be fieldstone and it is not permitted to be concrete. Top of the granite monument shall be angled and a Cast Bronze Plaque shall be affixed. The plaque shall be sized for a brief history of the regiment and 42 Names readable from a distance of 8'-0" away. Two (2) Bronze medallions of the Regiment's insignia shall be anchored one each to the front and to the back of the granite monument. Center insignia. Provide ground level recessed flood lighting for the monument.

5-4.17 **Secure Exit Gate**. Provide an architectural cross braced, square tube steel framed gate with 1-1/2" steel members. Provide 1" tube steel pickets arranged in an aesthetic pattern and extending above and below the gate frame with spacing no less the 5" on center. Provide 3" x 3" x ¼" steel tube hinge post on either side of 3'-0" clear opening for the gate. Anchor hinge posts to masonry opening. Provide a minimum of 4 hinges made up of ¼" top plates, ¼"gusset plates, ¼" plates, hinges, and all necessary accessory steel for fully functional exterior heavy duty grade hinge assembly. Provide neoprene washer and accessories where required. Gate should sufficiently restrict access to adult males thru a 6'-4" vertical opening in the pedestrian access when closed and locked. Provide Electro-Magnet lock that shall hold gate closed with 1200 lbs. of force. Electro-Magnet lock shall

have a power source. Access shall be permitted from the outside with card access. Exiting permitted by push button for exit. Provide a self-closing mechanism on the gate. All secure gate components and accessories shall be hot dipped galvanized steel with black powder coat finish. All tubes shall have finish ends or caps. All exposed fasteners/anchors shall be security type.

5-5 **INTERIOR DESIGN**.

5-5.1 **Floors**. Comply with requirements of applicable codes. Non-combustible construction is preferable, even where combustible materials are allowed by code. Floor finish materials shall be as specified in the Finish Schedule.

5-5.2 **Ceramic Tile**. Comply with ANSI A 137.1 and the recommendations of Tile Council of America (TCA) Handbook For Ceramic Tile Installation. Provide marble threshold under doors where a ceramic tile floor meets a different floor finish. Showers shall be per TCA B414-99, shower ceilings shall be per TCA C311-99, floors shall be per TCA F112-99, and walls shall be per TCA W244-99 or W245-99.

5-5.3 **Vinyl Composition Tile**. ASTM F1066, Composition I, solid color or through pattern, smooth surface, 12” x 12” x 1/8” thick.

5-5.4 **Resilient Cove Base**. Straight and adjacent to resilient flooring or carpet. Base shall be 4 inches high, 1/8” thick, plain color or through pattern to compliment flooring. Use flexible base to conform to irregularities in walls, partitions, and floors. Provide 1/8” thick premolded corners in matching size, shape, and color for all right angle inside and outside corners.

5-5.5 **Wood Base**. Shall be of same finish and character as moldings used on walls. Wood base shall be stained oak wood. Base shall be beveled or shaped, minimum of 4” x ¾”.

5-5.6 **Corner Guard**. Provide 1 ½” formfitting, with double-faced tape or contact cement, formed with acrylic/ PVC base with clean ability and impact resistance. Corner guards shall be Class I/A fire rated and meet national building code standards. Coordinate color with wall finish. Provide corner guards at all areas except inside Interview/Interrogation, Observation/Monitoring, and Suspect Rooms.

5-5.7 **Chair Rail**. Provide 2 ½” x ¾” solid oak wood, finish and shape to coordinate with wall base.

5-5.8 **Carpet.** Loop pile pattern, yarn dyed, tufted pile weight shall be 28.0 ounce per square yard. Finished pile height shall be .187” high, density 6,462 and 14 stitches per inch. Large dye lot capacity with clear, crisp colors. Primary backing shall be Woven Polypropylene and a high performance secondary backing system. Manufactured from permanent static control fiber, stain resistant, and direct glue-down installation is mandatory for limiting acoustical absorbency of floor surface. Carpet tile shall be used for computer access flooring. Carpet and computer access flooring shall be integrated type per access flooring manufacturers recommendations.

5-5.9 **Interior Walls and Partitions**. Comply with requirements of applicable codes. Non-combustible construction is preferable, even where combustible materials are allowed by code. Wall finish materials shall be as specified in the Finish Schedule. Partition framing shall extend from the floor to floor or roof framing. Partitions shall have finish (gypsum board or masonry) on at least one side from the floor to floor or roof framing except at Closets.

Acoustic or fire rated partitions shall extend from the floor to the underside of the rated floor or roof and shall be sealed with smoke stop or fire stop as required by code. Provide metal access panels in walls, floors or ceilings at all plumbing fixtures, cleanouts, valves, etc.

5-5.9.1 **Metal Support Systems**. Non-load bearing metal studs and furring shall comply with ASTM C 645; stud gauge shall be as required by height and loading, but shall not be less than 20 gauge. Maximum stud spacing: 16" on center. Provide galvanized finish.

5-5.9.2 **Acoustic Treatment.** All restrooms, mechanical rooms, Communications Rooms, Conference Rooms, Computer Server Rooms, Precinct Commander, Chief , Executive Chief and Muster/Squad rooms shall have partitions with a STC rating of at least 47.

5-5.9.3 **Gypsum Board**. Comply with ASTM C 36. Minimum panel thickness: 5/8". Provide Type X panels in fire-rated assemblies. Provide moisture resistant panels at locations subject to moisture. Provide abuse-resistant panels where indicated in the Finish Schedule. Joint treatment: ASTM C 475. Screws ASTM C 646. Drywall installation: ASTM C 840. Gypsum board shall not be finished with spray-applied texture or paint. Gypsum board shall have a smooth finish. Textured finishes are not permitted.
Moisture Resistant gypsum board shall have a colored face sheet and shall be manufactured to meet ASTM specification C 630.
High Impact gypsum board shall resist a force of 250 foot-pounds in compliance with ASTM D 2394.

5-5.9.4 **Uniform Finish.** All gypsum board surfaces shall be finished in accordance to GA 214 Level 5, except in closets where Level 3 is acceptable.

5-5.9.5 **Toilet Partitions**. Solid polyethylene, floor supported. Reinforce panels to receive partition-mounted accessories. All hardware shall be aluminum or stainless steel.

5-5.9.6 **Ceramic Tile**. Comply with ANSI A 137.1 and the recommendations of Tile Council of America (TCA) Handbook For Ceramic Tile Installation. Substrate for wall tile shall be mortar setting bed or cement backer board (gypsum board is not acceptable). Provide marble threshold under doors where a ceramic tile floor meets a different floor finish.

5-5.10 **Rubber Floor Tiles**. Provide durable, low maintenance, slip retardant 36"x36", 0.155" thick, 10 year wear warranty, and square pattern, Endura Rubber Flooring or approved equal. Floor should not require wax maintenance. Flooring shall be made 100 percent synthetic virgin rubber (no regrind or natural rubber). ASTM D-412, (ASTM D-2240, Shore A), ASTM D-570, ASTM C-501, ASTM D-2047, and Federal Test Method 3221. Very heavy traffic level usage. Provide Rubber Floor tile manufacturers matching cove base to complete the floor system in areas to receive floor tile. DEP Representative shall select from the Manufacturers colors.

5-5.11 **Paint**. Paint colors shall be selected by the Owner from the Contractors submittals. Paint shall not contain lead, chromate, asbestos or mercury.

5-5.11.1 **Surfaces to be Painted.** All unfinished surfaces and factory-finished surfaces exposed to the view of the public (wall or roof mounted items) shall be painted. Walls shall be painted to 4" above the suspended ceiling.

5-5.11.2 **Coatings.** All painted surface shall be primed and receive a minimum of 2 coats of paint.

Finish coat shall provide complete coverage. Painted masonry shall also receive block filler after block has been cleaned and accepted by the Owner.

5-5.11.3 **Types of Paint**. The following types of paint shall be used where indicated.

Exterior Alkyd Enamel-	Exterior handrails, guardrails, doors, frames, misc. items.
Interior Alkyd Enamel-	Interior doors, frames and metal items.
Interior Latex Enamel-	All other interior surfaces.
Latex Block Filler-	Any masonry or concrete to be painted.
Interior Latex Primer/Sealer-	Interior gypsum, masonry, plaster surfaces.
Interior Oil Based Primer-	Interior metal surfaces.

5-5.11.4 **Gloss levels.** The following gloss levels shall apply to all surfaces-

Flat-	Ceilings.
Eggshell-	Walls, doors, misc. items.
Semi-gloss-	Handrails, guardrails, doorframes.

5-5.12 **Ceilings**. Comply with requirements of applicable codes. Non-combustible construction is preferable, even where combustible materials are allowed by code. Ceiling finish materials shall be as specified in the Finish Schedule. Provide painted access panels in rigid ceilings for access to all plumbing and mechanical items.

5-5.12.1 **Suspended Acoustic Ceilings**. Ceiling grid shall be white painted aluminum in damp areas. Other grids may be electro-coated steel. Acoustic panels shall be 2' x 2' x ¾" thick, reveal edge, fissured pattern, washable, white, through color panels.

5-5.12.2 **Gypsum Board Ceilings**. Gypsum board or plaster ceilings shall be installed in accordance with the US Gypsum handbook. All gypsum board shall be at least 5/8" thick and supported on framing spaced no greater than 16" on center. Gypsum board shall not be finished with spray-applied texture.

5-5.12.3 **Concrete Ceilings**. Concrete ceilings are required in spaces as indicated in the Finish Schedule.

5-5.13 **Interior Doors and Frames**. Typical interior door shall be 3 feet wide x 6 feet 8 inches tall. All frames shall be hollow metal. Frames at stud-framed walls shall be wrap around. All doors shall have a key locking function unless otherwise indicated.

5-5.13.1 **Interior Wood Doors**. Provide flush wood solid core doors complying with National Wood Window and Door Association (NWWDA) I.S.-1A. Stile edges shall be non-finger jointed hardwood compatible with face veneer. Provide American Woodwork Institute (AWI) Grade A hardwood face veneer for transparent finished doors. Wood doors shall have a lifetime warranty.

5-5.13.2 **Interior Hollow Metal Doors**. Comply with ANSI A250.8/SDI 100. Doors shall be Level 2, physical performance Level B, Model 2; factory primed. Anchors and accessories shall be zinc coated. Hollow metal doors at security locations shall be 14 gauge, see paragraph 5-7 Physical Security Requirements.

5-5.13.3 **Hollow Metal Frames**. Comply with ANSI A250.8/SDI 100. Interior Frames shall be Level 2, 16 gauge (14 gauge at security locations see paragraph 5-7 Physical Security Requirements), with continuously welded corners and seamless face joints; factory primed. Anchors and accessories shall be zinc coated. Frames in masonry shall have bituminous back-coating, plaster guards, and shall be grouted solid. Frames at masonry walls shall be grouted solid. Frames shall be wrap around at stud walls.

5-5.13.4 **Fire-rated and Smoke Control Doors and Frames**. Comply with International Building Code (IBC), NFPA 80, and requirements of labeling authority. Doors and frames shall bear labels from IBC approved testing laboratory. Comply with positive pressure testing requirements of IBC.

5-5.13.5 **Interior Door Finish Hardware**. See paragraph 5-7 Physical Security for additional requirements.

5-5.13.5.1 **Keying**. Keying shall be coordinated with the Owner. A grand Master keying system shall be used for interior and exterior locks at the facilities. Each private door shall have it's own individual keying. Provide 3 copies and 3 spare blanks for each key. All keys shall be stamped "NY Property- Do Not Duplicate". Provide a 25 hook key control cabinet for each facility located as directed by the Owner in the Administrative space, plus a 150 hook key control cabinet for the Owner's locksmith. Label each key by room. Final keying and cores shall be sent to the Owner for his installation and not used or distributed by the Contractor.

5-5.13.5.2 **Finish**. All interior hardware shall be satin or polished stainless steel or chrome plated non-ferrous metal.

5-5.13.5.3 **Hinges**. ANSI/BHMA A156.1; template, full mortise; heavy duty, anti-friction, ball bearing. Minimum size 4 ½" x 4 ½ ". A minimum of 3 hinges per door shall be provided.

5-5.13.5.4 **Locksets on Interior Doors**. ANSI/BHMA A156.2; series 4000, Grade 1, non-ferrous base metal, removable core. Handles shall be lever type; doors shall not have knobs.

5-5.13.5.5 **Closers**. ANSI/BHMA A156.4; series C02000, Grade 1, hydraulic, factory-sized, adjustable to meet field conditions. Provide for all doors as required by codes.

5-5.13.5.6 **Auxiliary Hardware**. ANSI/BHMA A156.16. Provide other hardware as necessary for a complete installation.

5-5.13.5.7 **Kick Plates**. ANSI/BHMA A156.6; non-ferrous metal.

5-5.13.5.8 **Threshold/Transition**. Use floor finish transition strips when floor finish changes between rooms. Locate strip below door.

5-5.14 **Limitations on Use, Classification, and Flame Spread and Smoke Developed Ratings of Interior Finishes**. Refer to Chapter 11.

5-5.15 **Casework**. All work shall comply with the latest edition of the American Woodwork Institute

(AWI) Quality Standards for custom casework.

5-5.15.1 **Cabinets**. Cabinets with chrome plated handles, self-aligning friction hatches, and concealed hinges for 180 degree opening. Doors shall be flush overlay type. Provide wall bracket hangers for flush to wall mounting. Kitchen wall and base cabinets shall be same type of construction and appearance. Fabricate with frame construction throughout. Frames shall be solid hardwood not less than ¾" x 1 ½". Ends, bottoms, tops, and partitions shall be hardwood plywood not less than ½" thick. Cabinet backs and drawer bottoms shall be 3/16" hardwood plywood. Provide mortise and tendon, dowel joints and glue together to produce rigid unit. Finish all exposed edges of plywood with hardwood strips. Provide 3 ½" to 4" toe space with painted plywood or clear coated solid wood toe board. Provide one shelf per base cabinet and 2 adjustable shelves per wall cabinet. Shelves shall be ¾" hardwood plywood with edge bands and finished to match the cabinet. Cabinets shall not contain particle or fiberboard. Finish shall be oak hardwood with oak stain and clear matte urethane finish.

5-5.15.1.1 E.O.C. Storage Cabinet. See Furniture Requirements Attachment 2.

5-5.15.2 **Countertops**. Countertop and backsplash shall be constructed of ¾ inch plywood or partical board and shall be fully formed type with square edges using wood nose molding at counter edge and shall include an integral coved backsplash. Backsplash shall be not less than 3 ½ inches high. Edging and trim shall consist of plastic laminate cut and fitted to all exposed edges. End splashes of ¾ inch plywood shall be supplied. Continuous sheets of longest length practicable shall be provided. Joints in surface sheeting shall be tight and flush and held to a practicable minimum. GP50 plastic laminate shall be used. Plastic laminate shall conform to the requirements of NEMA LD 3 and plastic laminate adhesive shall be contact type applied to both surfaces. The post-forming plastic laminate shall not be bent to a radius smaller than the limit recommended by the plastic manufacturer.

5-5.16 **Window Treatments**. Provide horizontal aluminum mini-blinds at all exterior windows, except storefront. Blinds shall have one-inch wide x .008-inch thick slats with anti-static, anti-microbial polyester baked enamel finish. Provide heavy duty 1" x 1-1/2" steel head rail, and tubular steel bottom rail finished to match slats. Color shall be selected by the Owner.

5-5.17 **Interior Signage**. Comply with requirements of ADAAG and UFAS. Provide interior room identification signage for the following spaces: All interior spaces. Signs shall be approximately 8" long x 4" high multi-layered plastic laminate with clear portion allowing printed information to be inserted. Color shall be selected by the Owner.

5-5.17.1 **Building Directory.** Comply with requirements of ADAAG and UFAS. Provide a 48" x 48" custom glass strip type directory. Provide for removable, replaceable, and printable name strips. Letter board with grooved felt is not permitted. Colors and finishes to coordinate with interior design and Interior Signage.

5-5.18 **Window Stool**. Provide window stools of ¾" solid surfacing material or natural stone. Solid surfacing material must be resilient, nonporous, and renewable. Sill must be polished with eased edges. Color shall be selected by the Owner.

5-5.19 **Toilet Accessories**.

5-5.19.1 **Grab Bar**. Grab bar shall be 18 gauge, 1.25" OD Type 304 stainless steel. Length and form shall comply with handicapped accessibility codes. Flange shall have mounting holes concealed. Grab bar shall have satin finish and peened non-slip surface. Installed bars shall be capable of withstanding a 2.225 kN 500 lb vertical load without coming loose from the fastenings and without obvious permanent deformation. Space between wall and grab bar shall be 1.5".

5-5.19.2 **Mirrors (S-1)**. Glass for mirrors shall be Type I transparent flat type, Class 1-clear. Glazing quality ql ¼" thick conforming to ASTM C 1036. Glass shall be coated on one surface with silver coating, copper protective coating, and mirror backing paint. Silver coating shall be highly adhesive pure silver coating of a thickness, which shall provide reflectivity of 83 percent glass, and shall be free of pinholes or other defects. Mirror backing paint shall consist of two coats of special scratch and abrasion-resistant paint and shall be baked in uniform thickness to provide a protection for silver and copper coatings, which will permit normal cutting and edge fabrication.

5-5.19.3 **Paper Towel Dispenser**. Conform to CID A-A-2380, constructed of Type 304 stainless steel, Type I, shall be surface mounted. Dispenser shall have a towel compartment and a mirror door. Locking mechanism shall be tumbler key lock.

5-5.19.4 **Sanitary Napkin Disposer**. Constructed of Type 304 stainless steel with removable leak-proof receptacle for disposable liners. Fifty disposable liners of the type standard with the manufacturer shall be provided. Receptacle shall be retained in cabinet by tumbler lock. Disposer shall be provided with a door for inserting disposed napkins, and shall be partition or surface mounted.

5-5.19.5 **Soap Dispenser**. Surface mounted, liquid type consisting of a vertical tank with holding capacity of 1.2 L 40 fluid ounces with a corrosion-resistant all-purpose valve that dispenses liquid soaps, lotions, detergents and antiseptic soaps.

5-5.19.6 **Toilet Tissue Dispenser**. Surface mounted with 2 rolls of jumbo tissue. Cabinet shall be fabricated of high-impact plastic body and transparent plastic cover. Cover shall have key lock.

5-5.19.7 **Waste Receptacle**. Surface mounted or floor receptacle. Reusable liner, of the type standard with the manufacturer shall be provided. Receptacles with push doors and door for access to the waste compartment shall have continuous hinges. Locking mechanism shall be tumbler key lock.

5-5.19.8 **Electric Hand/Hair Dryer.** Drier shall be wall mounted push button/timer operated with rotating blower nozzle to allow for hair drying.

5-5.20 **Raised Access Floor**. Provide concrete access floor system equal to Tate Access Floor, Concore Posilock 1000. Include ramps and all required accessories for a complete system. Floor finish shall be carpet tile.

5-5.21 **Finish and Door Schedule.**
Finishes indicated below are preferred minimums; finish selections are not limited to those listed below.

Table 5-5.21

Rm#	Room Name	Floor	Base	Walls	Ceilings	Ceil. Ht.	Remarks	Doors/Hardware
B1	Boat and Car Garage	SC	PT CMU	PT CMU	PT ES	-	-	(4)K/12, C/18, and C/4
B2	Closet	VCT	PT CMU	PT CMU	PT ES	-	-	E/11
B3	Closet	VCT	PT CMU	PT CMU	PT ES	-	-	E/11
B4	Corridor	VCT	RCB	PT CMU & PT GWB	ACT	9’ - 0”	2, 5, 7	B/2
B5	UPS and Electrical Room	SC	RCB	PT GWB	PT ES	-	-	F/4
B6	Elevator Machine Room	SC	RCB	PT GWB	PT ES	-	-	F/4
B7	Men’s Locker	PCT	PCT	CT	PT GWB	9’ - 0”	4	J/8 x (2)
B7.1	Men’s Shower	PCT	PCT	CT	CT	9’ - 0”	-	Curtain x (2)
B7.5	Vestibule	PCT	PCT	CT	PT GWB	9 ’- 0”	3, 4	I/8
B8	Vestibule	PCT	PCT	CT	PT GWB	9’ - 0”	3, 4	I/8
B9	Women’s Locker	PCT	PCT	CT	PT GWB	9’ - 0”	4	J/8
B9.1	Women’s Shower	PCT	PCT	CT	CT	9 ’- 0”	-	Curtain
B10	Exercise Room	RFT	RFCB	PT GWB	ACT	9 ’- 0”	2, 7	J/8
B11	Closet	VCT	RCB	PT GWB	PT GWB	8’ - 0”	-	J/11
B12	Corridor	VCT	RCB	PT CMU & PT GWB	ACT	9’ - 0”	2, 5, 7	NA
B13	Stair No. 1	VCT	RCB	PT GWB	ACT	-	7, 11	H/16
B14	Armory	VCT	RCB	PT * (see remarks)	PT CONC	9’ - 0”	8	M/13
B15	Evidence Room	VCT	RCB	PT * (see remarks)	PT CONC	9’ - 0”	8	M/13
B16	Equipment Room (Female)	CPT	RCB	PT * (see remarks)	ACT	9’ - 0”	6	J/8
B17	Equipment Room (Male)	CPT	RCB	PT * (see remarks)	ACT	9’ - 0”	6	J/8
B18	Corridor	VCT	RCB	PT CMU & PT GWB	ACT	9’ - 0”	2, 5, 7	NA
B19	SOU	CPT	WD	PT GWB	ACT	8’ - 4”	5	I/8
B20	SOU CO Office	CPT	WD	PT GWB	ACT	8 ’- 4”	5	J/8
B21	HVAC and Mechanical Equipment Room	SC	PT CMU	PT CMU	PT ES	-	-	E/4

Rm#	Room Name	Floor	Base	Walls	Ceilings	Ceil. Ht.	Remarks	Doors/Hardware
100	Vestibule	PCT	PCT	PT GWB	PT GWB	9’ - 0”	1, 7	A/1
101	Lobby	PCT	PCT	PT CMU	ACT	9’ - 0”	-	G/6
102	Toilet	CT	CT	CT	PT GWB	8’ - 0”	3, 4	J/9
103	Corridor	VCT	RCB	PT CMU & PT GWB	ACT	9’ - 0”	2, 5, 7	H/17

Rm#	Room Name	Floor	Base	Walls	Ceilings	Ceil. Ht.	Remarks	Doors/Hardware
104	Corridor	VCT	RCB	PT CMU & PT GWB	ACT	9' - 0"	2, 5, 7	NA
105	Small Conference	CPT	WD	PT GWB	ACT	9' - 0"	5	I/8
106	Kitchen/Lunch Room	VCT	WD	PT GWB	ACT	9' - 0"	5	I/8, C/18
107	Stair No. 2	VCT	RCB	PT GWB	ACT	-	7, 11	H/15, C/18
108	Supply Storage	VCT	RCB	PT GWB	ACT	9' - 0"	-	J/11
109	Duty Sergeant	CPT	RCB	PT GWB	ACT	8' - 4"	-	J/8
110	Janitor's Closet	PCT	PCT	PT GWB	PT GWB	8' - 0"	4	J/11
111	Vestibule	PCT	PCT	CT	PT GWB	8' - 4"	3, 4	I/8
112	Men's Toilet	PCT	PCT	CT	PT GWB	9' - 0"	3, 4	J/8
113	Vestibule	PCT	PCT	CT	PT GWB	8' - 4"	3, 4	I/8
114	Women's Toilet	PCT	PCT	CT	PT GWB	9' - 0"	3, 4	J/8
115	Corridor	VCT	RCB	PT CMU & PT GWB	ACT	9' - 0"	2, 5, 7	B/2
116	Observation and Monitoring	VCT	PT CMU	PT CMU	PT CONC	9' - 0"	9	N/7
117	Interview/ Interrogation	VCT	PT CMU	PT CMU	PT CONC	9' - 0"	9	D/7
118	Suspect	VCT	PT CMU	PT CMU	PT CONC	9' - 0"	9	D/7
119	Suspect	VCT	PT CMU	PT CMU	PT CONC	9' - 0"	9	D/7
120	Suspect Toilet	CT	CT	CT	PT CONC	9' - 0"	9	L/7
121	ID Station	VCT	RCB	PT GWB	ACT	9' - 0"	6	-
122	Muster Room	VCT	RCB	PT GWB	ACT	9' - 0"	6	(2)D/10
123	Toilet	CT	CT	CT	PT GWB	8' - 0"	3, 4	J/9
124	Precinct Commanding Officer	CPT	WD	PT GWB	ACT	9' - 0"	10	I/14
125	Secretary	CPT	WD	PT GWB	ACT	8' - 4"	5	I/10
126	Side Vestibule	PCT	PCT	PT GWB	PT GWB	9' – 0"	1, 7	B/2, H/16
127	Stair No. 1	VCT	RCB	PT GWB	ACT	-	7, 11	H/15
128	System Administrator	CPT	WD	PT GWB	ACT	8' - 4"	5	I/10
128A	Building Server	RAF/ CPT	RCB	PT GWB	ACT	8' - 4"	-	J/8
129	Corridor	RAF/ CPT	RCB	PT CMU & PT GWB	ACT	9' - 0"	2, 5, 7	I/16
130	Administration	RAF/ CPT	WD	PT GWB	ACT	9' - 0"	5	NA
131	Sergeant Officer	RAF/ CPT	RCB	PT GWB	ACT	9' - 0"	-	I/8
132	Front Desk	RAF/ CPT	WD	PT GWB	ACT	9' - 0"	5	NA
133	Communications	RAF/ CPT	RCB	PT GWB	ACT	8' - 4"	-	I/8
134	Electrical Closet	VCT	RCB	PT GWB	PT GWB	8' - 0"	-	(3)O/11

Rm#	Room Name	Floor	Base	Walls	Ceilings	Ceil. Ht.	Remarks	Doors/Hardware
200	Corridor	VCT	RCB	PT CMU & PT GWB	ACT	9’ - 0”	2, 5, 7	NA
201	Detective Squad Room	VCT	RCB	PT GWB	ACT	9’ - 0”	6	(2)H/10
202	Interview Room	VCT	RCB	PT GWB	PT GWB	9’ - 0”	7	H/7
203	Interview Room	VCT	RCB	PT GWB	PT GWB	9’ - 0”	7	H/7
204	File/Copy Room	VCT	RCB	PT GWB	ACT	9’ - 0”	-	N/8
205	Storage	VCT	RCB	PT GWB	ACT	9 ’- 0”	-	N/11
206	Stair No. 2	VCT	RCB	PT GWB	ACT	9’ - 0”	7, 11	H/16
207	Vestibule	PCT	PCT	CT	PT GWB	8’ - 4”	3, 4	I/8
208	Women’s Toilet	PCT	PCT	CT	PT GWB	9’ - 0”	3, 4	J/8
209	Janitor’s Closet	PCT	PCT	CT	PT GWB	8’ - 4”	3, 4	I/11
210	Vestibule	PCT	PCT	CT	PT GWB	9’ - 0”	3, 4	I/8
211	Men’s Toilet	PCT	PCT	CT	PTGWB	9’ - 0”	3, 4	J/8
212	Conference Room	CPT	WD	PT GWB	ACT	9’ - 0”	10	J10, I/8
213	Closet	VCT	RCB	PT GWB	PT GWB	8’ - 0”	-	J/11
214	Conference Room/E.O.C	CPT	WD	PT GWB	ACT	9’ - 0”	10	(2) J10
215	Electrical Closet	VCT	RCB	PT GWB	PT GWB	8’ - 0”	-	(2) O/11, N/11
216	Administration	CPT	WD	PT GWB	ACT	8 ’- 4”	5	I/10
217	Conference Room	CPT	WD	PT GWB	ACT	9’ - 0”	5	I/8
218	Chief	CPT	WD	PT GWB	ACT	9’ - 0”	10	(2) J/14
219	Toilet	CT	CT	CT	PT GWB	8’ - 0”	3, 4	(2) J/9
219.1	Shower	CT	CT	CT	CT	8 ’- 0”	-	Curtain
220	Executive Chief	CPT	WD	PT GWB	ACT	9’ - 0”	10	J/14
221	Closet	VCT	RCB	PT GWB	PT GWB	8’ - 0”	-	J/11
222	Stair No. 1	VCT	RCB	PT GWB	ACT	9’ - 0”	7, 11	H/16
223	Secretary	CPT	RCB	PT GWB	ACT	8 ’- 4”	-	I/10
224	EEU C.O.	CPT	WD	PT GWB	ACT	9’ - 0”	10	J/14
225	EEU Toilet	CT	CT	CT	PT GWB	8’ - 0”	3, 4	J/9
226	Supervisor Sergeant	CPT	WD	PT GWB	ACT	9’ - 0”	5	I/8
227	Sergeant	CPT	WD	PT GWB	ACT	9’ - 0”	5	I/8
228	Closet	VCT	RCB	PT GWB	PT GWB	8’ - 0”	-	O/11

Remarks

1 Recessed floor entrance mat
2 Walls: (vinyl wall covering may be provided in lieu of paint finish at these locations)
3 60” high ceramic tile wainscot and painted water resistant gypsum board above
4 Water resistant gypsum wall board
5 34” high chair rail with painted wainscot
6 Walls: Impact-abuse resistant gypsum wall board painted, or painted CMU*
7 Impact-abuse resistant type gypsum wall board painted
8 Walls: painted concrete smooth finish, or painted CMU*
9 Door: Position Switch
10 34” high chair rail with vinyl wall covering wainscot, painted above
11 Provide rubber tread risers at all stairs.

Abbreviations

ACT	Suspended acoustic ceiling tile
AFF	Above Finished Floor
CMU	Concrete Masonry Units
CONC	Concrete
CPT	Carpet
CT	Ceramic tile
EM	recessed Entrance Mat
GWB	Gypsum Wall Board
Ht	Height
NA	Not applicable
Paver	Precast concrete paver
PCT	Porcelain ceramic tile
PT CMU	Painted concrete masonry units
PT GWB	Painted gypsum board
PT ES	Paint exposed structure (and all other unfinished items in room)
Rm #	Room number
RAF	Raised Access Flooring
RCB	Resilient Cove Base
RFCB	Rubber Floor Cove Base
RFT	Rubber Floor Tile
SC	Sealed concrete
VCT	Vinyl Composition Tile
WD	Wood

Doors

Door type	**Description**
A	Exterior aluminum entrance, pair
B	Exterior aluminum entrance
C	Exterior hollow metal with vision panel (4 1/4” x 2’-9” x 3/8”) glazing
D	Interior hollow metal door with vision panel (6” x 6” x 3/8”) polycarbonate glazing 52” AFF
E	Exterior hollow metal, pair
F	Exterior hollow metal
G	Interior aluminum entrance, pair
H	Interior hollow metal door with vision panel (4 1/4”x 2’-9” x 3/8”) glazing
I	Interior wood with vision panel (4 1/4” x 2’-9” x 3/8”) glazing
J	Interior wood
K	Exterior vehicle doors
L	Interior hollow metal door with vision panel (lexan 6” x 6” x 3/8”) polycarbonate glazing 52” AFF
M	Secure hollow metal door
N	Interior hollow metal door
O	Interior hollow metal pair

Door Hardware

HW no.	**Description**	
1	Ext storefront pair-	pivots, electromagnetic lock, ss push/pull rods, concealed flush bolts, concealed closers
2	Ext storefront-	pivots, electronic lock, ss push/pull rods, concealed flush bolts, concealed closer

3	Not Used	
4	Ext HM exit-	storeroom lockset, concealed flush bolts, closer with hold open, kick plates
6	Interior storefront pair-	pivots, electromagnetic lock, ss push/pull rods, concealed flush bolts, concealed closer
7	Interior -	Institution lockset, auxiliary ss thumb turn deadbolt hardware (thumb turn is located outside the room), kick plates, closer, door and frames prewired, electronic strikes, position switch, alarm tied to Front Desk
8	Interior-	classroom lockset, kick plates, closer
9	Interior-	privacy lockset
10	Interior-	entrance lockset, kick plates, closer
11	Interior-	storeroom lockset, kick plates, closer with hold open
12	Ext garage door-	motorized, prewired doors and frames with electric control and position switches, manufacturer's recommended HW for a complete installation as required for the overhead rolling doors described by this RFP
13	Interior secure-	entrance lockset, electronic lock, panic bars, closer, see description in section 5-7, Armory, and Evidence Room, door and frame
14	Interior-	entrance lockset
15	Interior exit-	passage lockset, flush panic bars, closer, kick plates
16	Interior exit-	classroom lockset, electronic lock, flush panic bars, closer, kickplates
17	Interior exit-	public door lockset, electronic lock, flush panic bars, closer, kickplates
18	Ext HM exit-	classroom lockset, electronic lock, flush panic bars, closer, kickplates

General Door notes
All HW no.s with "Ext" in the Description shall be weatherstripped.
All doors shall have anti-friction ball bearing hinges unless otherwise indicated.
All doors that do not have overhead holder/stops shall have wall or floor mounted stops.
All doors and frames shall be fire rated and labeled and include appropriate accessible hardware as required by code.
See "Exterior Doors and Frames", and "Interior Doors and Frames" for finishes.
All exterior doors shall have electronic strikes with automatic panic bar release.
All doors with electronic lock or electromagnetic lock shall have doors and frames prewired with electric strike, position switch, and integrated push bar.
All Electromagnetic locks shall have auto release.
See drawings for locations of card readers.

5-5.22 **TV mounting bracket**: Locate as indicated in FUNCTIONAL AND AREA REQUIREMENTS. Shall be ceiling mounting type, steel tube construction with black powder coat finish, with dual pivot system for adjustable viewing angle, and provide models to support 19" and 27" TVs. Wire management contains and protects cords cleanly out of sight. Mast shall telescope 18" - 30" from ceiling. Provide sufficient structural back up for a complete installation and in compliance with manufacturer recommendations for TV to be supported.

TV:	Bracket shall support a minimum weight of:
19"	80lbs
27"	165lbs

5-5.22.1 **TV mounting bracket (flat screen)**: Locate as indicated in FUNCTIONAL AND AREA REQUIREMENTS. Shall be wall mounted type, cold rolled steel construction with black powder coat finish, with 0° to 10° adjustable tilt viewing angle & three swivel points for unlimited screen positions, and provide a model to support the 37" Flat Screen TV specified in Furniture Requirements Attachment #2. Flat screen TV shall be Landscape mounted. Mount shall allow for self-leveling adjustment for flat panel to sit level at any angle. When fully retracted, the screen shall sit almost flush against the wall, or the articulating arm can be extended to a maximum of 30.5" from the wall. Wire management shall contain and protect cords cleanly out of sight. Provide sufficient structural back up for a complete installation and in compliance with manufacturer recommendations for TV to be supported. Provide manufacturers screw covers to conceal all wall mounting hardware and any adapter plates required by specified 37" Flat Screen TV.

5-5.23 **Intercom.** Provide Intercom system. Provide components in locations indicated in Chapter 2, FUNCTIONAL AND AREA REQUIREMENTS. See Chapter 9, 9-11 for system requirements.

5-6 **Kitchen Equipment**. Also, see Furniture Requirements Attachment 2 .

5-6.1 **Kitchen Sink**. One-piece, seamless, dual bowl, minimum 0.9 mm thick 20 gage stainless steel sink and counter. Provide drain board, swing spout faucet with aerator, 3 ½" drains, and provide storage cabinet with cutlery tray or drawer.

5-6.2 **Small Sink**. Conference 105. One piece, seamless, minimum 0.9 mm thick 20 gage stainless steel sink. Single bowl design.

5-7 **PHYSICAL SECURITY REQUIREMENTS**.

5-7.1 **Armory, and Evidence Room**. Unless more stringent construction features are required by life safety or building codes, minimum construction requirements shall be as follows:

5-7.1.1 **Floor**. 6" slab on grade; reinforced with minimum 6 x 6, W2.4 x W2.4 welded wire fabric, on vapor barrier, on 6" deep porous fill.

5-7.1.2 **Walls**. 8" thick cast-in-place concrete reinforced with #5 bars at 8" on center, each way, each face or concrete masonry units* with the same reinforcing and 3,000 psi grout in all masonry cells. Reinforcing shall be grouted into or cast in the slab.

5-7.1.3 **Ceiling**. 8" thick cast-in-place concrete reinforced with #5 bars at 8" on center, each way. Ceiling height of 9 feet.

5-7.1.4 **Door and Frame**. Level 2, 14 GA Hollow Metal. Keyed lockset requiring remote release from front desk before door will open. Comply with egress requirements of applicable codes.

5-7.1.5 **Penetrations**. Penetrations shall be minimized. All openings or penetrations in floor, walls or ceiling greater than 6" in any direction shall be protected with welded steel ¾" rod spaced no more than 6" on center or equivalent protection. All cervices, joints, and openings shall be sealed with detention grade sealant.

5-7.1.6 **Not Used.**

5-7.1.7 **Pass Thru Evidence Locker System.** Pass-thru evidence locker system to be DSM Law Enforcement Products or equal. Provide a complete system that shall allow for "chain of

custody" evidence handling. Cold rolled steel welded construction 14 gauge lockers shall be fully assembled and ready for use from manufacturer. Finish to be powder coat paint Finish and match DSM 'Nevada Beige' . Evidence lockers to have adjustable floor levelers and bolt to floor and each other to provide the secure perimeter at the evidence room. Provide manufacturers instruction and number tags on all front doors. Front doors shall reset from control side. Keys shall not be required for deposit of evidence. Provide a locking single full sized rear door. Provide manufacturers standard surround trim front and rear doors at wall opening. Provide two standard module units at (82"H x 36"W x 24"D) each. Two units shall be a DSM EDLC-11 and EDLC-06 configuration respectively. Provide manufacturers standard 4-year warranty.

5-7.2 **Interview/Interrogation Room, Interview, Interview, Suspect Toilet, and Suspect Rooms**. Unless more stringent construction features are required by life safety or building codes, minimum construction requirements shall be as follows:

5-7.2.1 **Floor**. 4" slab on grade; reinforced with minimum 6 x 6, W2.4 x W2.4 welded wire fabric, on vapor barrier, on 6" deep porous fill.

5-7.2.2 **Walls**. 8" thick cast-in-place concrete reinforced with #5 bars at 8" on center, each way, each face or concrete masonry units with the same reinforcing and 3,000 psi grout in all masonry cells. Reinforcing shall be grouted into or cast in the slab. Cast-in-place concrete shall have an Architectural concrete surface, grind and polish, provide smooth form surface and patch any surface blemishes with 5000 psi grout minimum.

5-7.2.3 **Ceiling**. 4" thick cast-in-place concrete reinforced with #5 bars at 8" on center, each way. Ceiling height of 9 feet. Provide smooth Architectural concrete surface, grind and polish, provide smooth form surface and patch any surface blemishes with 5000 psi grout minimum.

5-7.2.4 **Door and Frame**. 14 gauge hollow metal door and frame. Closer arm for doors shall not project inside of rooms.

5-7.2.5 **Penetrations**. Penetrations shall be minimized. All openings or penetrations in floor, walls or ceiling greater than 6" in any direction shall be protected with welded steel ¾" rod spaced no more than 6" on center or equivalent protection.

5-7.2.6 **Wall Rings**. Provide two (2) 3 1/8" diam. rings made of 3/8" diam. stainless steel and one 5 ¼" stainless steel mounting bracket for each ring. Each wall mounted ring shall be designed to restrain one individual 6'-4" tall and 350lbs minimum. Provide a minimum of 4 stainless steel masonry embed wall anchors for each mounting bracket. Mount so that centerline of the ring is 4'-0" above the floor slab. Locate one in front of each suspect room.

5-7.3 **Security Fasteners**. Fasteners for all items in secure areas (Armory, Interview, Suspect Room, Suspect Toilet) shall be torx head center pin reject type. All exposed exterior hardware fasteners shall be tamper resistant.

5-7.4 **Controls**. Suspect Rooms, Interview/interrogation, Interview, and Suspect Toilets shall have interiors free of devises such as light switches, door locks, shelving, surface mounted lights, etc. Light fixtures shall be recessed security type with switch located outside the room. Electrical outlets are prohibited in these rooms. Prisoner toilet and accessories shall be detention type.

5-7.4.1 **Suspect Toilet**. Suspect toilet shall be stainless steel vandal resistant combination fixture, (wash basin/toilet combination). Provide vandal resistant fixture equal to “Suicide resistant penal-ware, Comby model by Acorn Prison/ Security Plumbing fixtures.

6- STRUCTURAL

6-1.1 **GENERAL.** The structural criteria established herein shall be used for structural loading, design and installation of all structural systems and foundations, including manufacturing, erection, supervision, testing, and quality assurance of the completed installation of the buildings. All structural calculations shall be checked and initialed by a registered engineer other than the original design engineer. Construction Documents (drawings and specifications) shall be sealed and signed by a Professional Engineer registered and licensed to perform work in New York.

6-1.2 **STRUCTURAL WORK**. The structural work generally consists of, but is not limited to, design and construction of:

6-1.3 Building Foundations. As required by the geotechnical investigation. Footings and foundation walls shall be cast-in-place concrete, separate from the interior slab.

6-1.4 Ground floor slab systems. Slab on grade as recommended by the geotechnical investigation for multi-story facilities and basements.

6-1.5 Load Bearing Walls, including masonry and concrete, acting as primary vertical load carrying members and/or shear walls.

6-1.6 Non-load Bearing Walls including cold formed steel or masonry.

6-1.7 Vertical Framing Members, including structural steel and concrete columns.

6-1.8 Horizontal Framing Members, including roof and floor decks and diaphragms, roof and floor beams, joists and trusses.

6-1.9 Interconnection Details, including all fastening requirements.

6-1.10 Special Conditions, such as expansion, construction, and control joints, and changes in floor levels.

6-1.11 Attachment provisions for architectural, mechanical, and electrical elements.

6-1.12 Site structures, foundations, and retaining walls.

6-1.13 **DESIGN CRITERIA**. All structural loads (including dead, live, hydrodynamic, earth, snow, wind, and seismic loads) and design shall be in accordance with the New York State Building Code, International Building Code (IBC) and all codes referenced therein.

6-1.14 **SELECTION OF STRUCTURAL SYSTEMS**. The structural systems shall conform to all applicable criteria and guidance as well as industry standards and commonly accepted methods of practice.

6-2 SPECIAL REQUIREMENTS.

6-2.1 AISC Certification requirements: All fabrication of structural steel shall be accomplished by an AISC certified Category Sbd fabricating plant.

6-2.2 Cold formed steel studs shall only be used for non-loadbearing walls.

6-2.3 Combustible materials shall not be used for building framing or sheathing.

6-2.4 The garage area shall be designed for a heavy vehicular loading conforming to a HS20-44 loading.

6-2.5 Structural Steel framing shall be used for canopy roof structures.

6-2.6 Suspect Entrance Walkway Bridge shall be concrete and designed for a minimum uniformly live load of 100 psf. Live loads less than a minimum uniformly live load of 100 psf shall be non-compliant.

7- THERMAL PERFORMANCE.

7-1 THERMAL CHARACTERISTICS. Building construction shall conform to the requirements of ASHRAE 90.1-2001, except that the maximum heat transmission values (U-Values in Btuh/sf-F) shall be 0.16 for gross walls, 0.10 for walls, 0.03 for ceilings/roofs, and 0.07 for floors. R-Values shall be R-8 for Slab and Below grade walls, R-24 for roof insulation(roof insulation shall be continuous), R-19 for floor over the garage and unheated spaces, R-19 for framed exterior walls, and R-11 for concrete/masonry exterior walls. The R and U values shall be calculated in accordance with ASHRAE methods.

7-2 THERMAL INSULATION.

7-2.1 Characteristics. Thermal insulation shall have a flame-spread rating and a smoke-development rating in accordance with IBC requirements. A vapor barrier shall be provided on the warm-in-winter side of exterior wall and ceiling insulation, except in humid areas as defined below. Polyurethane is allowed as an insulation material for slabs and outside concrete or unit masonry walls. It is prohibited as an injected insulation material in walls or floor cavities or within the building envelope.

7-4 INFILTRATION. To limit air infiltration (especially in humid areas), the core areas within the Administration Building will be sealed with an air infiltration barrier, installed in accordance with the manufacturer's recommendations. The core area envelope shall be caulked, gasketed, weatherstripped or otherwise sealed: around window and door frames, between wall cavities and frames, between walls and ceiling and roof, between walls and floors, at access doors and panels, at utility penetrations through walls, floors, and roofs, and at any other exterior envelope joint which may be a source of air leakage. These steps shall constitute tight building construction.

8- PLUMBING.

8-1 **DESIGN STANDARDS AND CODES**. Plumbing system shall be designed and installed in accordance with the latest edition of the International Plumbing Code (IPC). Inspection and testing of the plumbing system shall be performed as prescribed in the International Plumbing Code. Specified materials and equipment shall be standard products of a manufacturer regularly engaged in the manufacturer of such products. Specified equipment shall essentially duplicate equipment that has performed satisfactorily at least two years prior to bid opening.

8-1.1 Additional consideration in the technical evaluation will be given to systems which incorporate measures beyond the requirements of this STATEMENT OF WORK which are designed to increase energy conservation, ease of maintenance, or occupant comfort (such as water filtration and purification), higher efficiency water heating systems, higher grade plumbing fixture materials (such as enameled cast iron tubs as opposed to enameled steel or plastic), etc.

8-1.2 System design and installation must conform to the following mandatory energy and water conservation criteria: Title 10 CFR Part 434.

8-2 **DESIGN CALCULATIONS**.

8-2.1 Hot water heater calculations. Design shall be based on the methods described in the American Society of Plumbing Engineers (ASPE) Volume I, Fundamentals of Plumbing Design. Submit calculations for determining storage capacity and recovery rate. Hot water storage temperature shall be 140° F. Hot water delivered to lavatories, sinks, and showers shall not exceed 120° F. Anti-scald mixing valves shall be provided.

8-2.2 Piping. Design shall be based on the International Plumbing Code for domestic water, sanitary waste and vent piping. All water piping shall be sized in accordance with methods outlined in the International Plumbing Code.

8-3 **EQUIPMENT**.

8-3.1 Natural Gas Water heaters shall have round, glass lined tanks, and shall be installed with an integral insulating wrap with a minimum R value of 5. Access shall be provided in the wrap for service and maintenance openings. Storage water heaters that are not equipped with integral heat traps and having vertical pipe risers shall be installed with heat traps directly on both the inlet and outlet. Circulating systems need not have heat traps installed. The water heater relief drain shall be manufacturer approved, and shall be indirectly connected to the building sanitary sewer system. Water heaters shall be sized in accordance with paragraph 8-2.1 for a 90 degrees F rise. Water heater energy factors shall meet or exceed the minimum requirements of 10 CFR Part 434 and shall be Energy Star or with efficiencies in the upper 25% of what is available. Additional consideration in the technical evaluation will be given to designs which include water heaters which exceed the minimum energy efficiency requirements and which utilize high efficiency water heaters.

8-3.1.1 Natural Gas fired water heater. Gas fired water heaters shall be in accordance with ANSI Z21.10.1, Water Heaters, Gas, Volume I, Storage Type, 75,000 BTUH Input or less. Water heaters with powered ventilation shall be vented in accordance with manufacturer's instructions. Gas fired water heaters shall have annual energy use of 246 therms or less based on 10 CFR Part 434. Units shall be UL listed. Unit shall be provided complete with P&T relief valve.

8-3.2 Pumps. Recirculating pumps shall be inline type and shall be provided whenever hot water piping extends further than 100 feet from a tank. Recirculation pump shall be timeclock enabled and shall run in response to a temperature sensor located ¾ down the longest length of hot water piping.

8-4 **FIXTURES**. The following fixtures will be acceptable for the facilities on this project except where noted

otherwise for specific buildings. Provide handicap accessible type as required by Uniform Federal Accessibility Standards (accessible fixtures are not required in basement toilets). Fixtures shall be water conservation type, in accordance with the International Plumbing Code. Fixtures shall be provided complete with fittings, and chromium- or nickel-plated brass (polished bright or satin surface) trim. All fixtures, fittings, and trim in a project shall be from the same manufacturer and shall have the same finish.

8-4.1 Vitreous china plumbing fixtures shall conform to ANSI A112.19.2, Vitreous China Plumbing Fixtures. Stainless steel fixtures shall be in accordance with ANSI A112.19.3, Stainless Steel Plumbing Fixtures (residential design). Plastic fixtures shall conform to ANSI Z124. Enameled cast iron plumbing fixtures shall comply with ANSI A112.19.1, and enameled steel fixtures shall comply with ANSI A112.19.4.

8-4.2 Exposed traps shall be chromium-plated, adjustable-bent tube, 20-gauge brass. Concealed traps may be plastic (ABS).

8-4.3 Faucets shall be single-control type, with seals and seats combined in one replaceable cartridge designed to be interchangeable among lavatories and lunch room sinks, or having replaceable seals and seats removable either as a seat insert or as a part of a replaceable valve unit. Water flow shall be no more than 2.5 gpm from any faucet.

8-4.4 Showers shall be equipped with a combination valve and flow control device to limit the flow to 2.5 gpm at pressures between 20 and 60 psi. Shower faucets shall be provided with temperature sensing anti-scald devices.

8-4.5 Piping shall be concealed. Individual shutoff or stop valves shall be provided on water supply lines to all plumbing fixtures except showers. Shutoff valves shall be provided for each bathroom group. In multi-story units, additional consideration shall be given in the technical evaluation to designs which provide separate shutoff valves for each floor.

8-4.6 Water closets. Water closets shall have elongated bowl, close coupled siphon jet, floor outlet with wax gasket. Water consumption shall be no more than 1.6 gal per complete flushing cycle. Water closet trim shall conform to ANSI A112.19.5, Trim for Water-Closet Bowls, and Urinals (Dimensional Standards). Shall be water saver type and shall meet the requirements of the code.

8-4.7 Urinals. Shall be flush valve, wall mounted type and shall meet the requirements of the code.

8-4.8 Lavatories. Lavatories shall be rectangular wall-hung type, minimum 20 by 18 inches in size. Lavatories shall be vitreous china. Lavatories shall have strainer drains. Shall meet the requirements of the code.

8-4.9 Showers. Shower stalls shall be of ceramic tile, floor to ceiling, over membrane waterproofing on a cementitious substrate. Shower receptors shall be slip resistant cast stone or gel-coated, glass-fiber-reinforced polyester. Shower stall wainscots shall be ceramic tile.

8-4.10 Lunch Room sinks. Lunch room sinks shall be Type 302 stainless steel, 20-gauge minimum, seamless drawn, and sound deadened. Sinks shall be single bowl, self-mounting without mounting rings, complete with cup strainer and plug. Shall meet the requirements of the code.

8-4.11 Service sinks/Mop Sinks. Shall meet the requirements of the code.

8-4.12 Electric water coolers. Units shall be electric refrigerated type and shall conform to the requirements of ARI 1010 and the Lead Contamination Control Act of 1988.

8-4.13 Prisoner Toilet Fixtures. Water Closet and wall mounted sink in the prisoner toilets shall be stainless

steel combination unit, detention grade (see Chapter 5), specifically designed for installation in this type environment.

8-5 **PIPING SYSTEMS**. Piping shall be concealed. Individual shutoff or stop valves shall be provided on water supply lines to all plumbing fixtures except showers. Shutoff valves shall be provided for each toilet or shower space. Provide cathodic protection and pipe joint bonding systems as required. Dielectric unions shall be provided at all water connections to the domestic hot water heater.

8-5.1 Domestic water piping. Piping and fittings shall be copper tubing. Valves shall be provided at each fixture and piece of equipment, at each toilet, and on takeoffs from risers to each floor. Under slab supply piping shall be limited to service entrance only.

8-5.2 Copper tubing. Water piping under concrete slabs shall be copper tubing, type K, annealed. Joints under the slabs are prohibited. If copper tubing is selected for interior water piping, it shall be type K, or L copper. Fittings for soft copper tubing shall conform to ANSI B16.26, Cast Copper Alloy Fittings for Flared Copper Tubes, and for hard-drawn to ANSI B16.22, Wrought Copper and Copper alloy Solder Joint Pressure Fittings.

8-5.3 Soil, waste, vent, and drain. Piping and fittings shall be cast iron, copper or polyvinyl chloride (PVC) plastic pipe. Cleanouts shall be provided as required by the code.

8-5.4 MISCELLANEOUS ITEMS.

8-6.1 Cleanouts. Cleanouts shall be provided at each change in direction of sanitary sewer lines, at the intervals not greater than 75 feet, and at the building service entrance. All cleanouts shall be permanently accessible. Ground cleanouts shall be installed in a 12-inch by 12-inch concrete pad, flush with grade. Wall and floor types shall be provided as required by the code. Provide access panels or cover plates in exposed areas.

8-6.2 Wall Hydrants. Wall hydrants shall be provided at the front and rear of each building. Wall Hydrants shall be frostproof, and shall be supplied with an integral vacuum breaker. Provide lock box cover.

8-6.3 Hose Bibbs. Required to provide water to vehicles in garage.

8-6.4 Backflow preventers. Required, provide in accordance with the plumbing code.

8-6.5 Floor Drains. Floor drains are required in garage, mechanical rooms, shower and toilet areas. Floor drains in toilet areas shall be trap primer type.

8-7 **PIPE INSULATION.** Insulation type shall be cellular glass(CG) – ASTM C 552 – Type II and Type III, polyisocyanurate(PC),- ASTM C 591 – Type I, or phenolic foam(PF) – ASTM C 1126 – Type III.

8-7.1 Domestic service hot water piping. Minimum pipe insulation thickness shall be 1-1/2” CG, 1” PC, or 1” PF.

8-7.2 Domestic service cold water piping, refrigerant suction lines, chilled water piping up to 2”, and roof drain piping shall be insulated with a minimum of 1-1/2” CG, 1” PC or 1-1/2” PF with vapor jacket. Chilled water piping over 2” shall be insulated with a minimum of 2” CG, 1” PC, or 1-1/2” PF.

8-7.3 Air conditioning condensate piping inside buildings shall be insulated with a minimum of 1” PC or 1” PF with vapor jacket.

8-7.4 Hot water heating piping shall be insulated with a minimum of 1-1/2” CG up to 1” pipe size, 2” CG up to 4” pipe size, or 1” PC or 1” PF for all pipe sizes.

8-7.5 Interior Roof drain piping (if used). Provide 1-inch thickness insulation on all

interior piping.

8-8 **Air Compressor:** Garage shall be provided with a compressed air system designed to facilitate vehicle light maintenance. Contractor shall select the appropriate size, provide the compressor with all required accessories for normal operation (filter, regulator, drier, lubricator, storage tank, etc.), and include all piping necessary to support quick connect couplings on each wall of the garage, one between garage doors and one on the outside of the garage in the driveway area. Expected tool usages are impact wrenches and tire inflators.

8-9 **Foundation Drainage Systems**: Facility design and construction shall include an engineered foundation drainage system around the entire perimeter of the facilities to be constructed. Systems shall include perforated drainage pipe, filter fabric, coarse gravel or crushed stone, pumped or gravity discharge, and any other necessary appurtenances. Foundation drainage system shall be part of an engineered system to prevent moisture entrance into the basements of these new facilities. Below grade basement water proofing is a requirement of this contract.

9- ELECTRICAL

9-1 DESIGN STANDARDS AND CODES. Comply with laws, ordinances, rules and regulations of all local, state and federal authorities having jurisdiction and the rules and regulations of the National Board of Fire Underwriters, the National Electrical Code and local electrical power, cable television and telephone company requirements. Contractor is required to prepare and construct the design under the supervision of a Registered Professional Electrical Engineer.

Electrical systems, including, but not limited to, interior power, exterior and interior lighting, communication systems, raceway for security systems, emergency power systems, uninterruptible power and cathodic protection shall be designed to comply with this section chapter and the documents listed below to the extent referenced in this section. The publications are referred to in the text by basic designation only. Power distribution and utilization voltage selected shall be the highest level that is practical for the load served. To maximize energy efficiency and potential for future load growth, the use of 480Y/277 volts for services above 150 KVA is encouraged. Services above 300 KVA shall be 480Y/277 volts. Where building service voltage is 480/277 volts, utilize interior dry type step-down transformers, 480-208Y/120 volts, to serve systems and equipment requiring 208/120 volts.

Drawings, specifications, design analysis and calculations shall be provided as required elsewhere in this RFP for submittals for design proposals, and design after award.

Provide new electrical systems, complete and ready for operation. The design and installation of all electrical systems, including manufacturer's products, shall meet the instructions and requirements contained herein.

Electrical designs shall give maximum consideration to the comfort of the occupants. The design shall also be economical, maintainable, energy conservative and shall take into account the functional requirements and planned life of the facility. Electrical designs shall also consider life cycle operability, maintenance and repair of the facility and real property installed equipment components and systems. Ease of access to components and systems in accordance with industry standards and safe working practices is a design requirement. All like equipment and accessories at a facility shall be from a single manufacturer.

Provide branch circuits, disconnect switches, magnetic starters, and all other related electrical equipment and material for all architectural, mechanical equipment and environmental equipment to be installed in the project (includes the facility and site). This shall include all hand dryers, HVAC units, unit heaters, pumps, exhaust fans, and all other mechanical equipment in the facility. Contractor shall coordinate this electrical requirement with the architectural and mechanical requirements.

Electrical systems shall be installed to meet the appropriate seismic protection of the area. Coordinate with the structural designer.

Any portion of the work which is not subject to the approval of an authority having jurisdiction shall be governed by the New York City Electrical Code, National Electrical Code, the National Fire Protection Association, Factory Mutual, OSHA, IEEE.

The applicable recommendation standards, specifications, code and performances practices of the organization listed below shall govern all work and equipment.

NFPA - National Fire Protection Association
NEMA - National Electrical Manufacturers Association
IEEE - Institute of Electrical and Electronic Engineers
UL - Underwriter’s Laboratory

IPCEA - Insulated Power Cable Engineers Association
FM - Factory Mutual
OSHA - Occupational Safety and Health Administration
NEC - National Electrical Code
NESC – National Electrical Safety Code
ASME/ANSI – Safety code for Elevators and Escalators

9-2 **DESIGN CALCULATIONS**. Provide calculations for the following:

9-2.1 Interior lighting. Provide calculations for each room or area. Data should identify target and calculated illumination levels for all typical rooms. Calculations should be adjusted to compensate for special applications such as irregularly shaped rooms, open sides, ceiling obstructions (beams, ductwork), corridors, etc. If the lumen method is used for corridor calculations, the calculations should be performed using a module in which the length does not exceed 3 times the width (2:1 ratio preferred).

Computations shall be based on the simple lumen method using coefficients of utilization corresponding to 80 percent ceiling and 50 percent wall reflectance factors in office type applications (white suspended ceilings and light colored unobstructed walls). The floor coefficient of utilization factor shall be 20 percent for most areas with dark carpeting or tile. Lower levels shall be used such as 50 percent/30 percent factors for applications with CMU walls, dark colors, irregular surfaces and/or structural obstructions. A maintenance factor of 0.7 shall be used for the typical application (this value shall be adjusted for non-typical applications - 0.75 or 0.8 for a well maintained office or lab with a filtered air supply, 0.65 for a mechanical room with minimal maintenance).

9-2.2 Exterior lighting. Provide point-to-point calculations for all site lighting to include parking areas, walkways, roadways, flood and security lighting.

9-2.3 Load Analysis for building to include connected and estimated demand. Separate loads by categories such as lighting, receptacles, HVAC, special equipment, etc.

Estimated Maximum demand (EMD) shall be calculated in accordance with NEC Article 220 for demand factors, in accordance with the direction below and in accordance with the NEC for design factors. Design factors are factors in the code such as continuous loads use 1.25 times the load and largest motor is times 1.25. EMD equals connected load times demand factor times design factor.

a. Incandescent Light Fixtures. Connected load shall be the sum of the lamp wattages. Use a demand factor of 80% to 100%.
b. HID and Fluorescent Light Fixtures. Connected load shall be the sum of lamp wattages and the ballast loss factors. Use a demand factor of 80% to 100%.
c. General use receptacles. Connected load shall be 180 VA for each receptacle with a maximum of six receptacles. Use demand factors per NEC Table 220-13.
d. Dedicated or Special equipment receptacles. Connected load shall be the nameplate rating of the equipment or it shall be the receptacle rating. Demand factor shall be 75% to 100%.
e. Fixed equipment. Connected load shall be the nameplate rating. Demand factor shall be 75% to 100%.
f. Electric kitchen equipment. Connected load shall be the nameplate rating. Demand factors shall comply with NEC Article 220.
g. Motors. Connected load shall be the nameplate rating. Demand factor shall be 80% to 100% and shall comply with Article 220.
h. Spares. Equipment such as transformers, panelboards, switchgear, switchboards, and motor control centers shall have 25% spare capacity. (Usable circuit space and spare load capability.)

9-2.4 Fault - short circuit calculations for electrical system. Infinite bus shall be used for available utility short circuit current. Fault current analysis shall be performed from the nearest upstream device in the existing source system of the utility company and extend through the downstream devices at the load end.

Low Fault-Levels. If the fault level (at the service transformer secondary) is 14000 A.I.C. or less for 480/277 V systems and 10,000 A.I.C. or less for 208/120 V systems, no additional documentation is necessary (assuming appropriate follow through in selection of equipment S.C. ratings).

9-2.5 Voltage drop - Provide calculations to verify voltage drops. Do not exceed limits as given in the National Electrical Code (NEC).

9-2.6 Panelboard feeders shall be rated to ampacity of panelboard mains.

9-3 **MATERIALS AND EQUIPMENT**. All materials and equipment shall be the standard catalogued products of manufacturers regularly engaged in the production of such equipment and material, and shall be the manufacturer's latest design. All equipment and material shall conform to the requirements of American National Standards Institute (ANSI), American Society of Testing and Materials (ASTM), National Electrical Manufacturer's Association (NEMA), National Fire Protection Association (NFPA) or other national trade association as applicable. Where standards exist, materials and equipment shall bear the label and be listed by Underwriters Laboratories, Inc. (UL) or other recognized testing organization.

9-3.1 Space requirements. Electrical space shall be provided for all electrical equipment. Space shall provide clearances and working areas as required by codes. Coordinate location to consider factors such as ease of maintenance, vicinity to loads being served, accessibility and the requirement for dedicated equipment space.

9-3.2 Wiring. Shall be copper and shall be run in rigid steel, intermediate metal conduit or electrical metallic tubing unless otherwise indicated herein or required by the NEC. Minimum size conduit shall be ½". Rigid non-metallic conduit may be used underground and within slab on grade. Provide flexible conduit where indicated by the NEC. Use solid conductors for sizes No. 10 AWG and smaller, and stranded conductors for sizes No. 8 AWG and larger.

9-3.3 Motors. Motors shall be high energy efficient type. Motors larger than one-third horse- power shall be three phase. Motors one-third horsepower and smaller shall be single phase. Motor starters for mechanical and special equipment will be furnished as an integral part of the mechanical or special systems.

9-3.3.1 Motor Efficiencies. Minimum motor efficiencies shall be either Energy Star or in accordance with DOE Buying Energy Efficient Products Recommendations (refer to www.eren.doe.gov/femp/procurement <http://www.eren.doe.gov/femp/procurement> for recommended efficiencies). Applications which require definite purpose, special purpose, special frame, or special mounted polyphase induction motors are excluded from these efficiency requirements. Motors provided as an integral part of motor driven equipment are excluded from this requirement if a minimum seasonal or overall efficiency requirement is indicated for that equipment by the provisions of another section.

9-3.4 Switchboard/panelboard. Dead-front construction, NEMA PB1 and UL 67. Circuit breakers shall be used in all switchboards and panelboards.

9-3.5 Exterior conduits for lighting and any other loads shall be PVC type. Rigid steel conduit shall be used where conduits enter parking lot lighting foundations, where conduits penetrate concrete footings and slabs and where otherwise exposed to physical damage.

9-4 GENERAL BUILDING ELECTRICAL DESIGN REQUIREMENTS

9-4.1 LIGHTING.

9-4.1.1 Interior. Lighting shall conform to levels noted in below table for space functions listed and in accordance with Illumination Engineering Society (IES) recommended levels for other areas not specified.

SPACE FUNCTION	DESIGN FC LEVEL
Office/Administrative Areas	50 multi-level switchable
Conference Rooms	50 multi-level switchable
Corridors/Hallways	10
Cleaning Closet	05
Lunch Room	50
Lobbies	15
Mechanical/Electrical Rooms	15
Communication Rooms	50 dimmable
Telephone Equipment Rooms	50
Storage Rooms	10
File/Storage	30
Toilets	20
Garage	20
Locker Rooms	20
Squad Room	30
Equipment Rooms	20
Detention Room	20
Interview Room	30
Evidence Room	30
Armory	30
Exercise Room	20
Stairs	10
Kitchen	50

9-4.1.2 Special Lighting Requirements: Fluorescent light fixtures with T8, 32 or 34 watt lamps shall be used in all areas of the building except as otherwise noted herein. Fluorescent lamps shall have a color temperature of 3500 degrees Kelvin, color rendering index of 85 or more and an initial lumen output of at least 2800. Fluorescent light fixtures in offices and related areas shall use 3 lamps and shall be deep cell (4”) parabolic fixtures. Offices conference rooms and Briefing rooms shall be provided with multi-level switching (0%-33%-66%-100%). Fixtures in other areas such corridors, restrooms, lobby, storage/laundry, etc. shall be 1, 2 or 3 lamp fluorescent type fixtures. Acrylic lenses on fluorescent fixtures may be used in restrooms, showers, etc., where fixtures are subject to damp atmospheres or where added protection for the lamps may be required. Fixtures in utility areas such mechanical rooms, electrical/communications room, storage rooms, and janitor's closet shall be industrial fluorescent type fixtures with open reflectors. Lamps in open industrial fixtures shall have protective tubes installed over the lamps. All ballasts shall be of the energy saving electronic type with power factor correction to exceed 90%. Low mercury "green type" fluorescent, compact-fluorescent, metal halide, and high pressure sodium lamps/bulbs shall be installed when available in the proper size and type for the application. Ballasts shall have a total harmonic distortion (THD) less than or equal to 10% and shall operate at a frequency range of 25k -33k Hz. Dimmable lighting can consist of dimmable compact fluorescent light fixtures instead of incandescent.

9-4.1.3 The building shall have emergency light fixtures and exit lights in accordance with NFPA requirements. Both shall have non-lead-acid type battery powered back-up, charge level meters and test buttons. Exit fixtures shall be of the LED type.

9-4.1.4 All light fixtures, exit signs, egress light fixtures, etc., shall be of the heavy commercial grade.

9-4.1.5 Exterior building luminaires (light fixtures) for general security by doors and CCTV camera monitoring shall be provided. Lamps shall be metal-halide sized to meet the lighting criteria and the most

economical installation. Building entrances shall be lighted to 21 lux (2 foot-candles). Fixtures will be photoelectric/timeswitch controlled with Hand-Off-Automatic manual override switch located at main electrical equipment space.

9-4.1.6 Fluorescent fixtures used in Communication Rooms shall use ballasts which have appropriate filtering to reduce RFI and EMI emission so as not to interfere with electronic equipment.

9-4.1.7 Occupancy sensors shall be used for locations such as conference rooms and toilets, where use would be intermittent and where control would generally be accessible to several individuals or functions. Infrared or dual technology (infrared/ultrasonic) sensors are to be used except that ultrasonic or dual technology types shall be used in toilets and other areas better suited to ultrasonic.

9-4.1.8 Location of light switches shall be coordinated with the floor plan and furniture layout to ensure that they are easily accessible and convenient. Location shall be coordinated with the User.

9-4.1.9 Under cabinet and task lighting shall be provided in the Kitchen Area.

9-4.1.10 The main desk area, (Administration Room), shall be provided with dimmable lights, along with indirect lighting or parabolic light fixtures to help reduce glare.

9-4.1.11 Light switches shall be of the totally enclosed tumbler type and shall be ivory in color.

9-4.2 POWER.

9-4.2.1 All circuits serving receptacle outlets shall be provided with a dedicated neutral conductor (one neutral conductor for each circuit).

9-4.2.2 Lighting and receptacle outlets shall be on separate branch circuits.

9-4.2.3 A green equipment grounding conductor shall be provided for all feeders and branch circuits, regardless of the type of conduit.

9-4.2.4 Transient Voltage Surge Suppressor (TVSS) shall be provided for protection of entire facility at main service equipment. Unit shall be the parallel type, UL 1449 listed, with L-N, N-G and L-G modes of protection. Minimum surge current rating shall be 80kA per phase. Maximum L-N suppression rating shall be 600V for 208Y/120V systems and 1200V for 480Y/277V systems. Minimum MCOV rating shall be 300/150V for 208Y/120V systems and 600/320V for 480Y/277V systems. Unit shall be separately mounted next to the building main service equipment in an enclosure per NEMA ICS 6.

9-4.2.5 Device plates for outlet bodies and light switches shall be impact-resistant plastic, ivory in color.

9-4.2.6 Receptacles: Receptacles shall be ivory in color.

Duplex receptacles for general purpose applications shall be 20 amp, 125 volt, 2-pole, 3-wire grounding type. A maximum of six duplex receptacles may be connected to a receptacle circuit. Receptacle circuits shall not supply lighting loads. General purpose duplex receptacles shall be located in the facility as follows:

a. As a minimum, provide general duplex receptacles every 3.65 meters (10') along the walls in all areas of the building. For small rooms that do not have 3.65 meter (10') walls, a minimum of one (1) outlet shall be installed on each wall. Receptacles shall be mounted 381mm (15") above finished floor, unless otherwise indicated or required. In addition, the location of the outlets shall be coordinated with the interior design package (furniture layout) to ensure proper placement.

b. Provide a general purpose duplex receptacle adjacent to each mirror for each sink position located in the bathrooms. Where mirrors are located other than above sinks, provide additional receptacles to accommodate hair dryers. Receptacles shall have (GFI) ground fault interrupters. Mount receptacles 1219.2mm (48") above finished floor.

Special Receptacles:

Ground Fault Interrupter (GFI) receptacles shall be provided in all rest rooms, sink countertops, janitor's closets, exterior of the facility, and other wet locations. Weatherproof receptacles for exterior use, shall be mounted in a box with a gasketed, weatherproof, cast-metal cover plate and gasketed cap over each receptacle opening with (GFI). Exact location of the receptacles noted below shall be coordinated with the USER during the design of this project. Provide 20 amp,125 volt, 2-pole, 3-wire grounding type, duplex receptacles in the following locations:

a. Provide a duplex receptacle for each electric water cooler.

b. Provide dedicated circuit with duplex receptacle for each copier and fax machine.

c. Provide a duplex weatherproof receptacle with ground fault interrupter on the exterior of the building adjacent to each exit door of the building. There shall be a least one receptacle per main exterior wall. Mount receptacles 609.6mm (24") above finished grade.

d. Provide two (2) duplex outlets every 1828.8mm (72") along each wall in the Telecommunications Room , but there shall be at least three duplex outlets along each wall. Outlets shall be 20A, 125 volt, duplex outlets with dedicated branch circuits. Three dedicated circuits shall be used in the Telephone Equipment Room. Receptacles shall be installed 381mm (15") above finished floor.

e. Computer receptacle outlets shall be duplex, 20 amp, 125 volt, 2-pole, 3-wire grounding type receptacles. A maximum of three duplex computer outlets shall be connected to a branch circuit. Circuits shall be sized using 600 volt-amp per computer. Neutral conductors shall be sized at 133% of the phase conductors. Computer outlets shall be labeled as "COMPUTER". Mount the outlets 381mm (15") above finished floor. A computer receptacle outlet shall be mounted near each Telephone/Data receptacle outlet, but maintain a separation of 152.4mm (6") from the Telephone/Data outlet. Exact location of all Computer Outlets shall be verified and coordinated with the USER during the design of the project. Location of outlets shall be coordinated with the interior design package to include the furniture layout.

f. Uninterruptible power system (UPS) equipment shall be continuous duty, solid state consisting of inverter, rectifier/battery charger, storage battery and static transfer switch and bypass.

9-5 SPECIAL WIRING DESIGN REQUIREMENTS.

9-5.1 Provide complete wiring and connection of lighting, power, and communication equipment and outlets to provide the functional features, equipment, and design requirements of the spaces described in Chapter 2, FUNCTIONAL AND AREA REQUIREMENTS, of this RFP.

9-5.2 Office Spaces. Private offices shall utilize walls for power and communication outlets to the maximum extent possible. Open office spaces shall be served via an above ceiling wiring distribution system. This system will be a combination of conduit, wireways, cable trays, and tele-power poles. In areas where system furniture is provided, channels which are made to connect the system furniture partitions to the above ceiling wiring distribution system shall be utilized in lieu of tele-power poles.

9-5.3 General purpose 20 ampere wall-mounted duplex receptacles shall be provided throughout the facility (especially in corridors) for use by cleaning staff. Receptacles shall be located so that any point in all floor areas is within 20 feet of one of these receptacles.

9-5.4 Wiring shall be provided for automated sinks and electric hand/hair dryers where such items are required by other parts of this RFP.

9-5.5 Communications Closets shall be provided with 3-20A receptacle circuits.

9-5.6 Building electrical service shall be 3-phase.

9-5.7 A spare 3" conduit shall be provided from the electrical service equipment area to the exterior 5' line. Conduit shall be sealed and capped. Mark capped end with ½" diameter steel rod driven flush with grade for future location purposes.

9-5.8 UPS shall be sized and connected to serve telecommunications, local area network equipment including work area computers, security system including surveillance cameras. Battery shall be sized to support the UPS full load for a minimum of 12 minutes.

9-5.9 Provide each conference room with two flush floor mounted boxes, each with a duplex receptacle, LAN and telephone outlet below each conference table.

9-5.10 Provide data and power connection for ceiling mounted projector in each conference room. Provide power and control wiring for associated motorized projector screens.

9-5.11 Provide garage door opener control at inside of each garage door and master control in the Communications Room.

9-5.12 Provide power and signal wiring in two 1" conduits between fuel station emergency cut-off, credit card station and card monitoring system in Communications Room. Coordinate wiring requirements with the system manufacturer.

9-5.13 Provide Communications Room with flush floor mounted boxes with duplex receptacle, LAN and telephone outlet each located in center of floor.

9-5.14 Provide underground power and control circuit, including pavement heaters for pop up bollards. Coordinate wiring requirements with the system manufacturer.

9-6 TELECOMMUNICATIONS. Contractor shall coordinate all communications requirements with the user and local communications utility company and provide a complete telecommunications cable and raceway system for this facility. All work shall be EIA/TIA compliant. Cable and jacks shall be Category 6 per EIA/TIA 568A, Commercial Building Telecommunications Cabling Standard. Horizontal building wiring shall be run in homerun (star) fashion from each work area outlet to the communications room. Provide data wiring from outlet jacks to termination on applicable patch panel (Category 6 compliant). Terminate voice telephone on 110 cross-connect blocks with stand-off brackets and provide patch panels in 19" racks for data connections. Follow requirements of ANSI/TIA/EIA-569-A and 569 for telecommunications closets and equipment rooms. (Provide ¾" plywood backboards on a minimum of two walls for mounting of communication wiring and equipment.) Provide communications channel ladder in Communications Room to provide means to route cabling from racks to above the ceiling. Provide cable tray above accessible ceiling throughout the building for distribution of voice/data cables. Route cables in conduit between cable tray and work area outlets. For specialized circuits, such as pay phones, coordinate with the local telephone company. Provide electrical and

telephone outlets installed per the Americans with Disabilities Act (ADA) to accommodate TTD's and other devices. Make connections to outlets in systems furniture as applicable. Provide telephone outlet for elevator car.

Telecommunication outlet locations. As a minimum, provide telecommunication/data outlets as indicated on the floor plan provided with this RFP. Two pay telephone outlets shall be located within the facility. Coordinate outlet locations with user and furniture arrangement.
All category 6 circuits shall be tested using a test set that meets the Class II accuracy requirements of EIA/TIA 67 (Transmission Performance Specifications for Field Testing of Unshielded Twisted-Pair Cabling System). Testing shall use the Basic Link Test procedure of TSB 67. Cables and connecting hardware which contain failed circuits shall be replaced and retested to verify the standard is met.

The telecommunications system shall comply with the labeling requirements of EIA/TIA 606, Administration Standard for the Telecommunications Infrastructure of Commercial Buildings.

Telecommunications system grounding shall conform to the requirements of EIA/TIA 607, Commercial Building Grounding and Bonding Requirements for Telecommunications.

Provide three 4" conduits between Communications Room and front desk. Provide four 4" conduits between Server Room and Basement Electrical Room, 4-4" conduits between Server Room and Communications Room (terminate two conduits in center of Communications Room floor, and four 4" conduits between Server room and 2nd floor Electrical Room. Provide two 4" conduits form the Communications Room to a point 5' outside of the facility below grade. Coordinate stub location with the commercial telephone service provider. Provide two 4" conduits from the Electrical Room in the basement to a point 5' outside the facility. Cap conduits 24" below grade and mark for future location purposes.

9-7 **ELECTRONIC SECURITY SYSTEM**- Each facility will have a security system. Furnish and install an empty conduit system (3/4" minimum size) with outlet boxes to accommodate the intent and operational considerations of the system as described by the functional descriptions found below. All wiring shall be in conduit unless otherwise noted. The designer of the empty conduit system shall meet and coordinate with the User for all final locations of equipment and outlets required by the system, based on final approved floor plans for the facility. The security system raceway shall include provisions for the intrusion detection and alarm devices as well as CCTV and access control systems. (Empty conduits to camera locations, power for CCTV system equipment, etc.)

The contractor shall provide the branch circuit cable and conduit (power) for the electronic security system equipment.

<u>General Electronic Security System (ESS) Functional Descriptions: The following information in paragraphs a-s below is provided for planning, design and installation of ESS raceway system. Provide complete raceway system with pull lines to facilitate installation of ESS system cabling and hardware by others (Cable and equipment by NYCDEP).</u>

a. All wiring associated with ESS field devices will be provided with Line Supervision. Line supervision will be employed to detect any opens, shorts, or tampering with security signals. With line supervision employed, it will only be necessary to install conduit from the security devices up to above the false ceiling, with wiring for a particular device coming into a J-box for splices. With line supervision, the cabling can then be run above the false ceiling to the room where the security panels are located.
b. Alarm monitoring will be performed in the Administration Room. Monitoring will be performed at a low profile console where the public cannot view the alarm and CCTV monitors.
c. Police Officer's will be using the door located near the Squad Room or Detention Room as their main ingress and egress point.
d. Every door (personnel or garage) part of the buildings perimeter will have at a minimum a door

contacts installed.

e. Security panels will be located in Communications Room 133. Terminate all security system and CCTV conduits in this room.
f. Remote facility will probably have their alarms coming in over dedicated phone lines. Provide conduit to get signals from the telephone panel to the security panels if these are not co-located within the same room.
g. Access to the Evidence Room and Armory will be controlled, with the Armory to have a Two-Man-Rule for access implemented. Provide door contacts for position monitoring. A remote release from the Administration Room/Front Desk is required with key access.
h. Vestibule entrance, which the public will be using to enter lobby of the Police Precinct, shall have a Magnetic Lock installed on each door leaf, a Request-to-Exit (REX) Passive Infrared (PIR) sensor installed above the door, and conduit provided for a Card reader to be installed on the exterior side of the door.
i. An exterior CCTV camera shall be installed near each exterior door location to allow the person at the Front Desk or Comm Room console to see who is at the door and the console operator shall have a pushbutton to buzz the person in when the doors are secured.
j. Lobby interior door leading from the lobby into the Precinct corridor shall have a means for controlling access to the rest of the Precinct (Electric Door Strike) with a Request-to-Exit Pushbutton installed on the hallway side of the door. A pushbutton will be used instead of an REX PIR given the traffic flow down the hallway would be releasing the lock. See RFP Finish Schedule, Hardware for additional locations.
k. Doors which Police Officer's will be using as their main point for ingress and egress shall have a Electronic Strike installed on each door leaf, a (Electric Door Strike) with a Request-to-Exit Pushbutton installed on the hallway side of the door and conduit provided for a Card reader to be installed on the exterior side of the door.
l. Exterior CCTV cameras shall be installed to monitor the building perimeter. Provide four camera outlets positioned on the exterior of the building 10' above grade to provide best view the entire building exterior.
m. Power circuits for ESS shall be connected to the UPS and emergency generator.
n. For controlled doors with a Card reader, the contractor shall provide a gang box and conduit stubbed up by the door so that installation of the wiring can be accomplished without having to tear into any walls. Frames and locks shall be prewired and include electronic strike and concealed position switch.
o. Provide two 1" conduits routed underground to each exterior access control point. Provide two 1" conduits to light pole at each access control point for connection of CCTV cameras.
p. Provide camera outlet in elevator room for connection of CCTV camera. Provide CCTV camera outlet in elevator car to monitor occupants.
q. Provide outlet for position switch at each roll-up door.
r. Provide two 1" conduits and CCTV outlet at fueling station light pole to Communications Room.
s. Provide two 1" conduits and CCTV outlet at Evidence Room to monitor door access and the evidence locker.
t. Provide two 1" conduits for wedge barriers at the access control point.

9-8 EMERGENCY GENERATOR REQUIREMENTS:

Provide a complete packaged dual-fuel engine-generator set and associated automatic transfer switch with by-pass/isolation capability for maintenance and with capability to supply power to meet the estimated maximum demand (EMD) power load of the entire facility (building and site) plus 25% spare capacity at 0.8 power factor. The percentage of non-linear loads shall be taken into account and if determined greater than 25%, then the non-linear loading must be used in determining the size of the unit. The emergency generator shall be housed in a skid mounted weatherproof sound attenuating enclosure suitable for use and operation in all natural ambient outdoor conditions at the installation site. Gen-set shall include all necessary accessories and

auxiliaries for proper operation including fuel, cooling, protective, instrumentation, control, automatic starting including necessary controls, battery and charging system, generator main breaker, starting aids, intake and exhaust silencers and electronic governor. Provide plenum to direct radiator and exhaust discharge vertically. Exhaust silencer shall be the quiet residential grade type. Provide a concrete pad for the unit. Anchor generator to concrete pad. Provide a buried ground ring around the pad with a ground rod at each corner. This ring shall be used for the grounding connections. The use of a switched neutral shall be coordinated with how the Designer of Record treats the emergency generator i.e. separately derived system or not a separately derived system. Provide remote annunciator panel at Main Desk Area to indicate complete standby/operating condition. Primary engine fuel shall be natural gas. Secondary (back-up) fuel shall be liquid propane and shall be served by the dedicated LP tank(s). .

a. Maximum load increase is 100% at 0.8 power factor.
b. Frequency bandwidth shall be 0.25%.
c. Electric starting where the batteries recharge in 24 hours.
d. Provide output breaker located with or adjacent to the unit.
e. The unit shall start within 10 seconds after a power outage.
f. Maximum voltage deviation shall be 10%.
g. Maximum frequency deviation shall be 5%.
h. Recovery time back to bandwidth from a 100% block change in load shall be 15 seconds.
i. Unit shall be designed and manufactured to operate properly during the temperatures changes experienced in the range of the area in which it is installed.
j. Provide emergency power generation independent back-up fuel supply for 48 hours of continuous operation. Back-up fuel shall be LP, and shall be served by the dedicated LP tank(s).
k. Generator and LP tank(s) shall be located as indicated.
l. A life safety type generator shall be installed (Level I). Generator shall start within 10 seconds of loss of power to facility

9-9 **PUBLIC ADDRESS AND MASS NOTIFICATION SYSTEMS.**

a. Provide PA system as required to serve areas and functions as noted below, and described in Chapter 2, FUNCTIONAL AND AREA REQUIREMENTS, of this RFP.

b. Provide an individual building type mass notification system to broadcast a warning throughout the building during threats and emergency conditions. System shall be designed in accordance with UFC 4-021-01. System shall utilize building wide speaker system capable of delivery of both pre-recorded message or a live message by microphone. System shall also activate a notification appliance network consisting of strobes and textural devices to alert the hearing impaired.

9-10 **CABLE TELEVISION SYSTEM.** Provide cable television (CATV) signal and power receptacle outlets as required to serve areas and functions as noted in the paragraph FUNCTIONAL AND AREA REQUIREMENTS.

9-11 **INTERCOM SYSTEM.** Provide an inter-communications system as required to serve areas and functions as noted in Chapter 2, FUNCTIONAL AND AREA REQUIREMENTS.

System Performance requirements

9-11.1 System shall be solid state, modular in design, and shall be of the wired type with master and remote stations intermixed. Station shall have capacity for later expansion to 3 master and 25 remote stations without sacrificing any equipment or feature performance.

9-11.1.1 Sound Reproduction

The intercommunication system shall reproduce at all receiving stations a 30 dB dynamic range of a 40 dB minimum input signal referenced to sound pressure level (SPL) over the frequency range of 300 to 3300 Hz. Unless otherwise specified, SPL shall be 20 micro Pascal (0.00002 Newtons per square meter). The root-mean square (rms) extraneous noise (e.g. hum) level introduced by the intercommunication system shall be at least 30 dB below the nominal signal level. Distortion, including envelope delay, intermodulation, cross talk, and other nonlinear source, shall not exceed 5 percent.

9-11.1.2 System Performance

Provide system with normally acceptable speech intelligibility, defined as a score of at least 75 percent obtained utilizing the phonetically balanced monosyllabic work intelligibility test in accordance with ANSI S3.2 (ASA 85).

9-11.1.3 System Operation and Service Features

a. All master stations shall have a "call-in" switch to provide an audible and visual indication of incoming calls from remote station. Individual visual indication shall identify calling station and status, and remain actuated until a call is answered by a master station.

b. A privacy switch shall be provided at each remote station. In the ON position, the switch shall prevent any transmission of sound from the remote station. When in the OFF position, without further switch manipulation, the station shall respond to incoming calls upon voice activation from anywhere within 6100 mm 20 foot radius of station.

9-11.2 Type 1 System: Direct Connected Keyed Intercommunication System

Provide master stations and remote stations in the quantities indicated. Each master station shall selectively communicate with any other master station and any remote station by actuating an appropriate selector switch. Each master station shall be capable of initiating a message to all other master stations and all remote stations simultaneously or in groups of not less than ten stations per group.

9-11.2.1 Master Station

Desk-mounted master stations shall as a minimum conform to the following specifications:

a. Capacity: Accommodate up to 25 stations

b. Speaker sensitivity: Minimum 40 dB

9-11.2.1.2 Intercommunication and All Call Amplifiers

Amplifiers shall as a minimum conform to the following specifications:

a. Output power: As required for specified performance.

b. Total harmonic distortion: Less than 5 percent at rated power with a load equivalent to one station connected to output terminals

c. Signal-to-noise ratio: 60 dB or greater at rated output

d. Frequency response ratio: Plus or minus 2 dB from 200 Hz to 10,000 Hz

9-11.2.2 Remote Station

Recessed wall-mounted remote station shall have stainless faceplate with temper proof mounting screws and galvanized steel back-box with "station call-in" capabilities. Remote station shall provide a speaker with a minimum sensitivity of 40 dB for speakers less than 200 mm 8 inches in diameter and 45 dB for speakers 200 mm 8 inches or greater. Remote station shall have a call announcement monitor lamp and recurring momentary tone.

9-11.3 Acceptance Tests

After installation has been completed, Contractor shall conduct an acceptance test in the presence of the Contracting Officer or its representative, to demonstrate that the equipment operates in accordance with specification requirements. Contractor shall notify the Contracting Officer 2 weeks prior to performance of tests. The acceptance tests shall include originating and accepting messages at specified stations, at proper volume levels, without cross-talk or noise from other links or non-designated units. Test shall utilize the phonetically balanced monosyllabic work intelligibility test in accordance with ANSI S3.2 (ASA 85). In order to be acceptable a score of at least 75 percent must be obtained for each system test.

9-12 **SPECIFIC AREA REQUIREMENTS (As applicable to each facility.)** (See Chapter 2, FUNCTIONAL AND AREA REQUIREMENTS, of this RFP, and RFP floor plans, for additional requirements for each area.)

9-12.1 Garage. Garage doors to be controlled inside garage and at Main Desk Area. Communication shall be by using an outdoor intercom. Provide door alarm, CCTV camera outlet, PA speakers, and wall phone.

9-12.2 Locker Rooms. Provide PA speakers and wall phone.

9-12.3 Toilet/Showers and Equipment/Locker Rooms. Provide receptacle near mirrors. (Except Prisoner Toilet).

9-12.4 Exercise Room. Provide TV outlet and wall bracket for CATV set. Provide wall phone.

9-12.5 Main Desk Area (Administration Room). Termination point for Door Alarm System, Intercom system, Public Address system, Mass Notification system, CCTV system, Emergency Generator monitoring panel, Control of magnetic door locks for front and rear doors, and Garage intercom system and door opening closing control. Provide empty conduit from desk area to phone room and LAN coordinator for future expansion. Provide power for fax and copy machines. Provide wiring for multiline phones. Provide some lights with battery backup. Provide multi-outlet raceway along countertop with power and telecom outlets spaced every 12”.

9-12.6 Evidence Room. Door to be alarmed.

9-12.7 Armory. Door to be alarmed.

9-12.8 Muster Room. Provide two wall phones. Provide outlet from television system. Provide CATV outlet for ceiling mounted TV. Provide power and telephone receptacles. PA speakers to have on/off volume control.

9-12.9 Toilets. Provide electric hand/hair dryers as indicated.

9-12.10 Patrol Supervisors Admin Area. All desks to have receptacle and telephone outlets and computer line capability. Computer terminal location.

9-12.11 Interview Rooms. Provide dimmable down lights with battery backup. Provide receptacle outlets.

Provide Prisoner Alarm system to control panel at Main Desk. Provide light on the outside of the room indicating (Room In Use) with separate switch in room. Provide wall phone.

9-12.12 Administrative Office Spaces. All desks to have receptacle and telephone outlets and computer line capability. Computer terminal location.

9-12.13 Lunch Room. Provide wall phone.

9-12.14 Computer Equipment Room. Provide two 30A circuits with two 30A- 208/120 volt twist lock receptacles, and four 20A circuits with four quad 20A-120V receptacles, each on dedicated circuits. Provide six quad data outlets and one telephone outlet.

9-12.15 Communications Room. Provide dimmable high VCP lighting fixtures with ¾" parabolic louver.

9-12.16 Conference Room. Provide six quad wall data/telephone outlets. Dimmable indirect lighting.

9-12.17 First and Second Floor Corridors. Provide track lighting for accenting wall plaques and art on walls.

9-12.18 Observation. Provide dimmable downlights.

10- HEATING, VENTILATING, AND AIR CONDITIONING.

10-1 Design Standards and Codes. The HVAC design shall be in accordance with 10 CFR Part 434 and the current version of the International Mechanical Code

10-2 **DESIGN CALCULATIONS**.

10-2.1 Heat loss and heat gain calculations. Heating and cooling loads shall be in accordance with the current edition of the ASHRAE Handbook of Fundamentals using an hour by hour analysis. Computer-generated load calculations shall be provided, and shall include complete input and output summaries. Equipment shall be sized to meet the total load determined by computer calculation. Equipment may be oversized to no more than 115 percent of the computer generated load. Design shall be based on weather data UFC 3-400-02 Engineering Weather Data and when not available through this resource, from ASHRAE Handbook of Fundamentals; or from other recognized and authoritative sources of weather data. Room air flow requirements shall be computed based on the individual room load. Values for internal cooling loads shall be included in the computerized load calculations in accordance with actual loads or when not available in accordance with ASHRAE recommendations. Minimum space heating and ventilation shall be provided in spaces normally unoccupied, such as bulk storage and equipment rooms.

Type of Design /Design Information	
Heating	
Indoor Design Temperature	70 °F
Unoccupied Space Design Temperature	55 °F
Outdoor Design Temperature	6 °F
Annual Heating Degree Days	5753
Garage	60°F
Cooling	
Indoor Design Temperature	75 °F
Outdoor Design Dry Bulb Temperature	90 °F
Outdoor Design Wet Bulb Temperature	74 °F

10-2.1.1 Load design criteria – Administration Facility. The internal loads shown in Table 10-4 shall be Included for each space listed. The degree of activity for all people shall be moderately active office work. Lights shall be included for the actual quantity provided. Any additional equipment furnished under this contract shall also be included in the appropriate space.

TABLE 10-4 – INTERNAL LOADS

Space	People	Equipment
Offices/Administrative Type Spaces	1 / 100 sf	1 PC/person
Conference Room	1 / 20 sf	30 people & 30 PCs
Lobby	1 / 33 sf	None
Training	1 / 20 sf	1 PC/person
Lunchroom	10	Range/Oven Refrigerator Microwave, 2 Vending Machines
Corridor	1 / 300 sf	None
Exercise Room	1/100 sf	None
UPS and Electrical Room	0	As per Electrical Design
Male and Female Equipment Rooms	1/60 sf	None
Armory	2 Persons	None
Evidence Room	8 Persons	1 PC
File/Copy Room	1/100 sf	1 PC
Muster/Squad Room	1/100 sf	2 TV's

10-2.2 Ventilation air. Calculations determining minimum outside ventilation air and exhaust shall be provided for each building space. Ventilation rates shall be in accordance with the latest edition of the ASHRAE 62. Outside air quantities will be sufficient to meet ventilation requirements and maintain a positive pressure relative to the outdoors in the living/sleeping rooms, interior corridors, offices, conference rooms, lobby and similar occupied areas. The Boat and Car Garage shall be ventilated at a rate of 1 CFM per square foot of floor area.

10-2.3 Duct calculations. Calculations shall be provided for sizing all duct systems, including static pressure drop calculations for all fans. Ductwork (double line) layout drawings shall also be provided to indicate all fittings and devices to substantiate calculations.

10-2.4 Piping calculations. Calculations shall be provided for pressure drop calculations for all piping systems, including head loss calculations, and expansion compensation for all pumps.

10-3 **MECHANICAL SYSTEMS.** The building shall be heating and cooled and ventilated using central station air handling units. Air handling units should be zoned, variable frequency type variable volume type for all areas with exception of mechanical rooms, communication rooms, server room, and garage. Zones shall be served using parallel type fan-powered VAV boxes with hydronic heating coils. Server and communication rooms shall be service by dedicated single zone air handling units providing individual zone temperature and humidity control. Garage shall be conditioned utilizing central station air handling unit providing heating and ventilation. Mechanical room shall be heated and ventilated utilizing unit heaters and exhaust fan. Exercise room shall be provided with mechanical exhaust in addition to air conditioning to provide slightly negative pressure and avoid migration of odor and moisture to surrounding spaces. All systems shall be designed, installed, balanced, and adjusted to distribute heat ventilation and cooling in proportion to the calculated requirements. Each VAV box or zone shall have a separate adjustable thermostat. VAV boxes shall not serve an area over 800 sqft. Spaces shall be zoned by grouping similar orientations and occupancies. The concrete pad mounted air-cooled chiller shall be located in the mechanical yard area, observing all recommendations of the manufacturer. Heating shall be provided by dual gas-fired boiler located in the Mechanical Room. Additional consideration will be given during the evaluation process for systems which include energy conservation measures and which provide for reduced operating and maintenance costs. Rooftop units are not acceptable.

10-3.1 Air distribution systems. Heating and cooling primary air will be provided from the air-handling units to the individual variable air volume boxes. The variable air volume boxes with parallel type fan and hydronic heating coil shall deliver air to each space. Return air grilles/registers shall be located in the lower wall area with return air ducts run in the wall space to the maximum extent possible. All supply and return ductwork shall be insulated. Air shall be returned to the air-handling unit using a variable frequency controlled variable air volume return fan to maintain the required amount of outdoor ventilation air. There shall be no air intake louvers located less than 10 feet above ground.

10-3.2 Heating only systems. For spaces where heating only is required, provide unit heaters, fin tube radiation, cabinet heaters or convectors. Units shall be hydronic or electric type.

10-3.3 Exhaust systems. Provide individual ceiling mounted fans or a central building continuous exhaust system with ductwork for janitor closet, shower, and toilet exhausts. Provide individual thermostatically controlled exhaust fans for storage spaces, mechanical/electrical rooms and other spaces where ventilation only is required. Provide exhaust hoods individually and directly ducted to the exterior through a wall louver for range and cooking surface.

10-3.4 Unit heaters. Units shall be horizontal or vertical air discharge types complete with fans, electric or hydronic heating elements, housing and discharge vanes or diffuser.

10-3.5 Fin tube radiation. Units shall be complete with hydronic or electric heating elements and enclosures. Enclosures shall be constructed of sheet steel not less than 20 gauge.

10-3.6 Cabinet heater. Units shall be complete with fans, hydronic heating elements and enclosing cabinets. Cabinets shall be constructed of sheet steel not less than 20 gauge.

10-3.7 Convectors. Units shall be complete with heating elements and enclosing cabinets having bottom recirculating opening, manual control damper and top supply grille. Heating elements shall be hydronic type. Cabinets shall be constructed of black sheet steel not less than 20 gauge.

10-4 **AIR DISTRIBUTION TERMINAL UNITS**.

10-4.1 Exhaust fans. Fans shall be centrifugal type, roof or wall mounted, direct or V-belt driven with backward

inclined, non-overloading wheel. Motor compartment housing shall be hinged or removable and weatherproof, constructed of heavy gauge aluminum. Fans shall be provided with birdscreen, disconnect switch, gravity or motorized dampers. Roof mounted units shall be provided with roof curb. Lubricated bearings shall be provided. Fans shall be tested and rated according to AMCA 210.

10-4.2 Ceiling exhaust fans. Suspended cabinet-type ceiling exhaust fans shall be centrifugal type, direct-driven. Fans shall have acoustically insulated housing. Integral backdraft damper shall be chatter-proof. The integral face grille shall be of egg-crate design or louver design. Fan motors shall be mounted on vibration isolators. Unit shall be provided with mounting flange for hanging unit from above. Fans shall be U.L. listed.

10-4.3 Range hoods. Range exhaust fans shall be two-speed and equipped with light and variable speed blower control. Backdraft damper shall also be included. Maximum allowable noise level shall be 6 sones as installed.

10-4.4 In-line fans. Fans shall have centrifugal, backward inclined blades, stationary discharge conversion vanes, internal and external belt guards, and adjustable motor mounts. Fans shall be mounted in a welded tubular or square casing. Air shall enter and leave the fan axially. Inlets shall be streamlined with conversion vanes to eliminate turbulence and provide smooth discharge airflow. Fan bearings and drive shafts shall be enclosed and isolated from the air stream. Fan bearings shall be sealed against dust and dirt and shall be permanently lubricated, and shall be precision self-aligning ball or roller type. Fans shall be tested and rated according to AMCA 210.

10-5 **AIR DISTRIBUTION / CENTRAL EQUIPMENT**. Minimum equipment efficiencies shall be in accordance with DOE Buying Energy Efficient Products Recommendations (refer to www.eren.doe.gov/femp/procurement for recommended efficiencies) or Energy Star.

10-5.1 Air handling units. Units shall include fans, coils, airtight insulated casing, adjustable V-belt drives, belt guards for externally mounted motors, access sections for maintenance, combination sectional filter-mixing box, vibration-isolators, and appurtenances required for required operation. Air handling unit shall have published ratings based on tests performed according to ARI 430. All sections shall be constructed of a minimum 18 gauge galvanized steel, or 18 gauge steel outer casing protected with a corrosion resistant paint finish. Casing shall be designed and constructed with an integral structural steel frame such that exterior panels are non-load bearing. Casings shall be provided with inspection doors, access sections, and access doors. Inspection and access doors shall be insulated, fully gasketed, double-wall type, of a minimum 18 gauge outer and 20 gauge inner panels. Drain pans shall be constructed water tight, treated to prevent corrosion, and designed for positive condensate drainage. Coils shall be fin-and-tube type constructed of seamless copper tubes and aluminum or copper fins mechanically bonded or soldered to the tubes. Coils shall be rated and certified according to ARI 410. Filters shall be listed according to requirements of UL 900. Filters shall be 2-inch depth, sectional, disposable type of the size indicated and shall have an average efficiency of 25 to 30 percent when tested according to ASHRAE 52.1. Filters shall be UL Class 2. Fans shall be double-inlet, centrifugal type with each fan in a separate scroll. Fan bearings shall be sealed against dust and dirt and shall be precision self-aligning ball or roller type. Bearing life shall be L50 rated at not less than 200,000 hours as defined by AFBMA Std 9 and AFBMA Std 11. Bearings shall be permanently lubricated or lubricated type with lubrication fittings readily accessible at the drive side of the unit.

10-6 **COOLING EQUIPMENT**. Minimum equipment efficiencies shall meet or exceed the requirements of the latest version of ASHRAE 90.1. Provide factory-assembled, electrically driven, air-cooled, centrifugal water chillers rated in accordance with ARI 550/590. Chiller shall be provided with DDC control with full integration of control points with building DDC system. Provide with controls for low ambient operation and coil guards. Circulating pumps shall be base mounted, end suction, with flexible connections. Pumps shall be designed for duplex operation with 100% redundancy. Pumps shall be provided with calibrated balancing valves, check valves, pressure gauges (inlet and outlet), flexible connections (inlet and outlet), strainer, and expansion tank and air separator with automatic fill valve

and air separator. Minimum of four-inch reinforced housekeeping pads shall be provided for equipment mounted indoors and six-inches reinforced pads for equipment mounted outdoors.

10-7 **HEATING EQUIPMENT.** Factory-assembled and -packaged, fuel-fired boilers, with cast-iron sections set on an insulated steel base, sealed with high-temperature sealant and held together with tie rods; with insulated extended jacket and vent connection. Water-backed combustion area with water circulating around firebox, access to flue passages for cleaning, and flame-observation ports. Refractory chamber or separate base not required. Minimum water-pressure Rating of 40 psig. Fabricate and label boilers to comply with the ASME Boiler and Pressure Vessel Code: Section IV, "Heating Boilers." Boilers tested and rated according to the Hydronics Institute's "Testing and Rating Standard for Heating Boilers," with I=B=R emblem on a nameplate affixed to the boiler. Boiler shall be provided with dual gas train (natural gas/propane). Boiler burner and controls shall be setup and configured for automatic changeover via building DDC system to operate using either natural gas or propane. Minimum of four-inch reinforced housekeeping pads shall be provided for equipment mounted indoors. Pumps shall be designed for duplex operation with 100% redundancy. Pumps shall be provided with calibrated balancing valves, check valves, pressure gauges (inlet and outlet), flexible connections (inlet and outlet), strainer, and expansion tank and air separator with automatic fill valve and air separator.

10-8 **AIR DISTRIBUTION SYSTEMS**. Provide duct systems conforming to the recommendations of the SMACNA Duct Construction Standards and ASHRAE Fundamentals Handbook for Duct Design. Duct Seal and Pressure classifications are as follows:

STATIC PRESSURE CLASS	OPERATING PRESSURE	TYPE OF PRESSURE	SEAL CLASS
2-inch	Up to 2-inches	Pos/Neg	C
3-inch	2 to 3-inches	Pos/Neg	B
4-inch	3 to 4-inches	Pos	A

10-8.1 Fire dampers shall be provided where required by code. Balancing dampers shall be provided at all branch takeoffs and for all supply outlets. Where dampers are provide on ductwork with interior insulation, a two-inch insulation standoff shall be provided. All dampers shall be provided with quadrant locking type handle. Permanent access to dampers shall be provided. Design drawings produced by the Contractor shall indicate the pressure classification for all ductwork in accordance with SMACNA standards

10-8.2 Ductwork. All ductwork designated to be constructed at a duct pressure class of 2-inch water gauge or greater shall be pressure tested. The maximum allowable leakage rate shall be in accordance with the SMACNA Leakage Test Manual. Test procedure, apparatus, and report shall conform to SMACNA. The leakage test shall be satisfactorily completed prior to applying the external duct insulation.

10-8.3 Supply diffusers and registers. Diffusers shall be located to ensure that an ADPI (Air Diffusion Performance Index) of 80 or better is achieved. At least one diffuser shall be provided in each habitable room. Diffusers shall be provided with integral opposed blade damper. Diffusers shall be provided with air deflectors as required for proper airflow in the space. Plastic diffusers are prohibited. Core velocity shall be limited to 500 fpm maximum, with a maximum pressure drop of 0.1 inch water. Airflow from any single diffuser shall be limited to 250 cfm maximum (NC 20 to 25). Ceiling mounted units shall have factory finish to match ceiling color, and be installed with rims tight against ceiling. Sponge-rubber gaskets shall be provided between ceiling or wall and surface-mounted diffusers for air leakage control. Diffuser boots shall be sealed tight to the wall or ceiling they penetrate using duct mastic or caulking. Suitable trim shall be provided for flush- mounted diffusers. Duct collar connecting

the duct to diffuser shall be airtight and shall not interfere with volume controller. Wall supply registers shall be installed at least 6 inches below the ceiling.

10-8.4 Return/exhaust registers and grilles. Grilles shall be fixed horizontal or vertical louver type similar in appearance to the supply diffuser face. Registers shall be provided with integral opposed blade damper. Plastic units are prohibited. Core velocity shall be limited to 350 fpm maximum, with a maximum pressure drop of 0.06 inch water. Grilles shall be provided with sponge-rubber gasket between flanges and wall or ceiling. Register/grille boots shall be sealed tight to the wall or ceiling they penetrate using duct mastic or caulking. Wall return grilles shall be located at least 6 inches above the floor or below the ceiling.

10-8.5 Flexible duct. Shall be limited to runouts, shall be adequately supported to prevent kinks and shall not exceed 6 feet in length. Runouts shall be preinsulated, factory fabricated, and conform with NFPA 90 and UL 181.

10-8.6 Fire dampers: Fire dampers shall be located and installed in accordance with NFPA 90A requirements, and shall be labeled in accordance with UL standard 555. Fire dampers shall be Dynamic Rated for closure against airflow in the following installation configurations:

a. Vertical Mount (horizontal airflow) – Ducted and unducted
b. Horizontal Mount (airflow up) – Ducted and unducted
c. Horizontal Mount (airflow down) – Ducted and unducted

Fire damper shall be rated to close against maximum design airflow at its installed location with a 10 percent safety factor and against 8 inches water gauge maximum pressure across the closed damper. If wall, floor, or partition has a fire resistance rating of 3 hours or more, the fire damper shall have a UL 555 fire rating of 3 hours. All other fire damper shall have a UL 555 fire rating of 1½ hours. Fire dampers shall be equipped with a steel sleeve or adequately sized frame and installed such that the operation of the damper will not be impaired. Fire dampers shall not reduce the cross section area of duct or air transfer openings. Duct access doors shall be provided at all fire dampers. Design shall address access to the dampers located above ceiling, etc.

10-8.7 Balancing dampers. Provide in ducts serving each supply, return and exhaust air device.

10-8.8 Access doors. Provide in ductwork and plenums at all air flow measuring devices, automatic dampers, fire dampers, coils, thermostats and other devices requiring service and inspection.

10-9 **PIPING SYSTEMS**. Piping systems shall be in accordance with the following subparagraphs. Fittings and valves shall be compatible for the piping systems in which installed. Provide flexible connections where necessary to prevent vibrations from transmitting from equipment to the piping system. Pipe supports shall conform to MSS SP-58 and MSS SP-69.

10-9.1 Refrigerant. Copper tubing shall conform to ASTM B 280 annealed or hard drawn as required. Copper tubing shall be soft annealed where bending is required and hard drawn where no bending is required. Soft annealed copper tubing shall not be used in sizes larger than 1-3/8 inches. Refrigerant piping, valves, fittings, and accessories shall conform to the requirements of ASHRAE 15.

10-9.2 Condensate drain. Shall be copper tubing or PVC pipe.

10-10 **INSULATION**. All insulation, at minimum, shall meet the requirements of ASHRAE 90.1. Equipment insulation shall be a minimum of 2-inch thickness or as necessary to prevent the surface temperature from exceeding 140 degrees F. Thermal insulation on piping, fittings, ductwork, equipment and vessels shall be installed per the “National Commercial & Industrial Insulation Standards” (MICA) Manual. The sample specification format in Section VI of the MICA manual shall be used and edited to suit the work to be performed. Insulation of all equipment subject to operating at or below 50 degrees F

shall be provided with closed-cell insulation. Refer to plumbing section for pipe insulation schedule to be utilized.

10-10.1 Duct insulation. Provide on the exterior of all supply and outside air ducts and plenums and on all return ducts in unconditioned spaces. Rigid board type insulation with all service jacket shall be provided in mechanical rooms and exposed spaces. Flexible blanket type insulation shall be used in concealed spaces. Exhaust ductwork does not require insulation. Internally lined or fiberglass ductwork shall not be allowed. Insulation shall be faced with a vapor barrier material having a performance rating not to exceed 1.0 perm. Insulation, vapor barrier, and closure systems shall be non-combustible as defined in NFPA 255, with a flame-spread rating of not more than 25, and a smoke development rating of not more than 50, as defined in ASTM E-84. Where insulated ducts pass through fire walls, fire partitions, above grade floors, and fire rated chase walls, the penetration shall be sealed with fire stopping materials.

10-10.2 Pipe. Provide on all aboveground hot and cold piping systems except PVC condensate drains. Insulation shall form a continuous thermal retarder and shall have a vapor retardant to prevent condensation on cold piping systems. Installation shall be with full length units of insulation and using a single cut piece to complete a run. Cut pieces or scraps abutting each other shall not be used. Supply the insulation with manufacturers recommended factory applied jacket except for flexible cellular. Piping exposed to weather or to 8 foot above finished floor in mechanical room shall be insulated and provided with an aluminum or stainless steel jacket. Where insulated pipes pass through fire walls, fire partitions, above grade floors, and fire rated chase walls, the penetration shall be sleaved and sealed with fire stopping materials.

10-10.3 Equipment. Provide on all equipment where temperatures are are anticipated to reach below 60 degrees F, or above 104 degrees F or where condensation may occur. Insulation shall be suitable for the temperature encountered. Insulation shall be formed or fabricated to fit the equipment. Removable insulation sections shall be provided to cover parts of equipment which must be opened periodically for maintenance including vessel covers, fasteners, flanges and accessories. Supply the insulation with manufacturer's recommended factory applied jacket.

10-11 CONTROLS. Provide complete and fully functional Direct Digitial Control (DDC) system including software and manuals. The system architecture shall utilize native BACnet communication between intelligent distributed control modules over Ethernet, ARCNET, or EIA-485 media. The system shall provide the Direct Digital control (DDC), Energy Management and building Automation system for the air conditioning, heating, ventilating and related subsystems.

BACnet Compatibility. All native BACnet general purpose and programmable field controller shall be Conformance Class 3, and support the following Objects and Application Services:

Objects >	Binary Input	Services >	Readproperty
	Binary Output		Writeproperty
	Binary Value		I-am
	Analog Input		I-have
	Analog Output		ReadMultipleProperty
	Analog Value		WriteMultipleProperty
	Calendar		Who-has

	Schedules		Who-Is

The communication network between general purpose field controller shall be BACnet over ARCNET at minimum 156 Kbps for performance and BACnet MS-TP over EIA-285 at minimum 38.4 Kbps for unitary or terminal unit controllers.

Building systems integration. Gateway (Bi-Directional Protocol Translator or BPT). The Building Automation System (BAS) shall establish a seamless interconnection with other electrical and/or mechanical subsystems through a Gateway. All Gateway's shall be controlled, monitored and graphically programmed through the Graphical Uner Interface (GUI). All gateway's must be independent of the workstation software PC and be fully functional if the PC workstation is disabled. Gateway's shall display the information detailed in developed I/O point list. OEM manufacturer's shall bid either BACnet or provide a BACnet gateway for the BAS manufacturer. The BPT shall be microprocessor based communication device designed to provide seamless, two-way translation between two or protocols. The BPT shall accommodate a variety of Data Link/Physical Layer configuration including PTP (point-to-point) over EIA-232, MS/TP via EIA-485, ARCNET over EIA-485, and Ethernet using the IEEE 802.3 standard approved for BACnet. In addition to BACnet (Conformance Class 3), the BPT shall also support other protocols including Modbus, LonWorks (using only LonMark certified functional profiles), J-bus and other low level protocols. The BPT shall have at least three communication ports. One shall be for communication between native BACnet controllers residing on the controller network, while the other two communication ports shall have the ability to be configured for different protocols. The BPT shall provide full custom programmability of the data flowing between the networks using the same graphical programming as specified herein. The system shall have the ability to create custom building control strategies using global data between networks.

Local Area Network Bridges and Routers. Local area network bridges and routers must be of a modular design to ensure reliability and system performance. PC based bridges and routers are not acceptable. The LAN Router shall act as a communications router between the main controller network and a Local Area Network (LAN).

Standalone Controllers. General purpose controllers must use BACnet as the native communication protocol between controllers and must, as a minimum, support the following Objects and Application Services (Conformance Class 3):

Objects >	Binary Input	Services >	Readproperty
	Binary Output		Writeproperty
	Binary Value		I-am
	Analog Input		I-have
	Analog Output		ReadMultipleProperty
	Analog Value		WriteMultipleProperty
	Calendar		Who-has
	Schedules		Who-Is

Each general purpose controller shall reside on the BACnet communications bus and utilize native BACnet commincation between all other controllers and devices on the network.

Unitary controllers. The unitary controllers shall use BACnet as the native communications and must, as a minimum support the following Objects and Application Services (conformance Class 2):

Objects >	Binary Value	Services >	Readproperty
	Analog Value		Writeproperty

Pneumatic actuators for automatic valves, dampers and similar will be allowed. Provide all devices required, including air compressors, refrigerated dryers, current transducers, transformers, thermostats, sensors, controllers, actuators, control valves, dampers, transmitters, flow meters, etc., to provide a complete and operable system. All thermostats for systems that provide both heating and cooling shall have a deadband of 5 degrees F. All equipment and systems shall be automatically controlled and monitored by the control system. Control system instructions shall be provided for each system. The instructions shall consist of half-size laminated drawings and shall include the control system schematic, equipment schedule, ladder diagram, sequence of operation, panel arrangement drawings, wiring diagram, and valve and damper schedules. Contractor shall pay particular attention to maintaining the necessary provision of outdoor air for ventilation purposes during all times when the facility is occupied. DDC controllers for the AHU, boiler, and chiller shall be located in the Mechanical Room. All other controllers shall be located in the same room as the equipment or in the Mechanical room. Provide two portable programmable controllers capable of checking and resetting control point settings. Provide one high-quality laptop computer with full color graphics capability and software to run diagnostics, load all programs and data, display and control any AI, DI, AO, DO, or PA point, display and modify database parameters, and enable/disable each DDC.

Graphical User Interface Workstation. Graphical User Interface (GUI) shall be a 32 bit full featured software application compatible with latest Window's Operating System (OS). GUI's that use a modified Windows OS shall not be acceptable. The intent of the design shall be for the GUI t provide an easy to use graphical workstation that enables operators to manage their facilities on a day to day basis. The user may navigate within the system to check environmental conditions, setpoints, scheduled, etc. Using a mouse, it shall be possible to easily navigate through floor plans and different areas within a facility or multiple facilities. In addition, manual commends may be used to navigate directly to any point in the system and a tree structure shall show the control system hierarchy.

Sequence of Operation: Contractor's proposed operating sequences for the HVAC systems shall include setback, ventilation control, ventilation delay start-up mode, and economizer controls. Control sequences shall be fully developed and documented during the design stages. Sequences and control points should meet the minimum requirements of UFC 3-410-02 Control Systems.

Programming Device: Contractor shall furnish to the Government a hand-held programming device suitable for maintenance and upkeep of the installed DDC based control systems. A laptop computer configured in accordance with the controls system requirements with data port located in main mechanical room and one other location to be designated during design phase.

10-12 **TESTING, ADJUSTING AND BALANCING**. Testing, adjusting and balancing of each system shall be the Contractor's responsibility. Testing and balancing of air systems shall be accomplished by a firm certified for testing and balancing by the National Environmental Balancing Bureau (NEBB). The TAB contractor shall be an independent firm (not financially associated with any of the subcontractors on this project) hired by the prime contractor. The TAB firm shall additionally perform the following:

a. Final design review (report provided to COR) of HVAC construction documents to insure the HVAC design provides the proper quantity and location of balancing devices and test ports necessary for accurate TAB results.
b. Prior to start of TAB effort the installed systems shall be inspected (report provided to COR) by the TAB firm to insure the system components, which affect the TAB effort, are properly installed and functioning. TAB shall not begin until the TAB firm's final report indicates all necessary corrective actions have been accomplished.

Testing of individual items of equipment shall be performed by a person authorized to perform such testing and startup by the equipment manufacturer. The contractor shall correct all systems and equipment not found in compliance, and shall be responsible for all labor and materials required for this effort. AABC MN-1or NEBB-01 shall be used as the standard for providing testing of air and water systems. The selected standard shall be used throughout the entire project. All recommendations and suggested practices contained in the selected standard shall be considered mandatory. Instrumentation accuracy shall be in accordance with selected standard. The provisions of the TAB standard, including checklists, report forms, etc., shall, as nearly as practical, be used to satisfy the Contract requirements.

10-12.1 Piping systems. Each piping system including pipe, valves, fittings and equipment shall be hydrostatically tested and proved tight at a pressure of 1-1/2 times the design working pressure, but not less than 100 psi for a period of not less than two hours with no appreciable loss in pressure. Piping shall not be insulated until testing is completed and acceptable. Upon completion of installation and prior to startup, each hydronic system shall be balanced. All balancing data, including deficiencies encountered and corrective action taken, shall be recorded. Following final acceptance of certified reports by the Contracting Officer, the setting of all HVAC adjustment devices shall be permanently marked by the Contractor's balancing engineer so that adjustment can be restored if disturbed at any time.

10-12.2 Air systems. Following adjusting and balancing, duct pressure testing of air systems shall be performed on 10 percent of the systems which have been randomly selected by the Contracting Officer. No additional testing will be required if at least 90 percent of the tested systems pass the air leakage test requirements. If less than 90 percent of the tested systems pass the air leakage test, an additional 10 percent of the systems shall be tested. This process shall continue until 90 percent of the total number of tested systems pass. Where specific systems require special or additional procedures for testing, such procedures shall be in accordance with the standard selected. All data, including deficiencies encountered and corrective action taken, shall be recorded. Following final acceptance of certified reports by the Contracting Officer, the setting of all HVAC adjustment devices shall be permanently marked by the Contractor's balancing engineer so that adjustment can be restored if disturbed at any time.

10-12.3 Equipment. Each item of equipment provided, including air handling units, VAV box units, boilers and air-cooled chiller units shall be tested in accordance with the equipment manufacturer's standard testing procedures. A factory representative shall be present for the startup and testing of each item of equipment. A certified report shall be provided for each item of equipment tested.

10-13 **COMMISSIONING**. All HVAC systems and equipment including controls shall be commissioned in accordance with the following Clauses 5 (Program-Phase Procedure), 6 (Design Phase), 7 (Construction Phase), 8 (Acceptance Phase) and 12 (Commissioning Documentation) in ASHRAE Guideline 1. The Commissioning Authority (CA), referenced in ASHRAE Guideline 1, shall be hired by the prime Contractor. The CA shall be completely independent from the Contractor and shall not be a Contractor's employee or be an employee or principal of a firm in a business relationship with the Contractor negating such independent status. The roles and responsibilities of the CA are defined in Annex A DIVISION 15 PART 1 Paragraph 1.03 (B.) and shall become part of the contract requirements. Clause 6.2.3 makes reference to Appendix A6.4 for a sample commissioning specification which shall become part of the contract requirements and shall be edited to suit the work to be performed. The CA must meet the following qualifications:

a. Be employed by an AABC or NEBB certified firm.
b. Hold a management position in the firm, be able to represent the firmon all HVAC commissioning matters, and have a reputation of integrity with building owners, consultants and awarding authorities. The CA must have experience equal to either of the following;
   1. A Bachelor of Science engineering degree from an accredited college or university with a least five (5) years of experience in performing commissioning of HVAC systems prior to solicitation of this project or
   2. A minimum of ten (10) years experience in commissioning of HVAC system prior to solicitation of this project.
   3. The CA shall have experience on a minimum of five (5) projects using the commissioning of facility in accordance with ASHRAE Guideline 1 for the five phases indicated above. At least two of these projects shall be similar in size with similar HVAC systems to this project.
   4. Names and experience of each team member assigned to this project. The person(s) performing each of the five phases shall be included and indicated that each person has performed the function for at least (3) years prior to solicitation of the project.

c. Become NEBB qualified and/or maintain NEBB qualification as a TAB supervisor for both AIR and HYDRONIC systems by passing appropriate written and practical TAB examinations.
d. Demonstrate Knowledge in the category or categories of HVAC commissioning.

10-14 TRAINING. The Contractor shall conduct a training course for the operating for all HVAC operating systems and individual items of equipment. The training program shall be conducted in accordance with Clause 11, Operations and Maintenance Training Program, in ASHRAE Guideline 1 in addition to the following requirements. The field instructions shall cover all of the items of equipment provided as well as the overall systems. The training period shall consist of a total of 8 hours of normal working time and shall start after the systems are functionally completed and testing, adjusting and balancing have been completed. Factory representatives shall be present to assist in training for every item of operating equipment provided. Contractor shall provide two copies of operation and maintenance instructions for each item of equipment provided. Training shall consist of startup, normal operation and shutdown, as well as demonstrations of routine maintenance operations. The Contracting Officer shall be notified at least 14 days prior to date of proposed conduction of the training course.

10-15 **Fuel Dispensing System and UST's.** Provide fuel dispensing (Unleaded Gasoline), fuel management system with Pump enable switch function feature, operating from Communications room 133, and store fuel in underground storage tanks (UST's) as described within the scope of work and fully developed specifications 15193 and 13216. UST for regular unleaded gasoline shall be 5000 gallons. Provide underground storage system for propane. UST's for propane shall consist of a series of tanks selected and sized to meet capacity requirements in Chapter 4. Leak detection monitoring system(s) shall be provided for the gasoline storage system with alarm in room 133.

11- FIRE PROTECTION

11-1 DESIGN STANDARDS AND CODES. The fire protection design for all facilities shall be in accordance with the current versions of the International Building Code and the National Fire Protection Association (NFPA) standards and codes.

11-1.1 Fire Protection Engineer. The contractor shall provide the services of a qualified registered fire protection engineer. The fire protection engineer shall be an integral part of the design team and shall be involved in all aspects of the design of the fire protection system.

11-1.2 Fire Protection and Life Safety Analysis. The fire protection engineer shall perform a fire protection and life safety design analysis of the proposed facility design. The analysis shall be submitted with the preliminary design submittal. The analysis shall include type of construction; height and area limitations; classification of occupancy; building separation or exposure protection; specific compliance with NFPA codes and the IBC; requirements for fire-rated walls, doors, fire dampers, etc.; analysis of automatic suppression systems and protected areas; water supplies; smoke control systems; fire alarm system, including connection to the base-wide system; fire detection system; standpipe systems; fire extinguishers; interior finish ratings; and other pertinent fire protection data. The submittal shall include a life safety floor plan showing occupant loading, occupancy classifications and construction type, egress travel distances, exit capacities, sprinklered areas, fire extinguisher locations, ratings of fire-resistive assemblies, and other data necessary to exhibit compliance with life safety code requirements.

11-2 BUILDING CONSTRUCTION. Comply with most restrictive requirements of New York Building Code, International Building Code and NFPA 101Life Safety Code.

11-2.1 Fire Extinguishers and Cabinets. Provide portable fire extinguishers in accordance with NFPA 10. Provide semi-recessed aluminum fire extinguisher cabinets with clear view panel in public areas, and where indicated in functional and area requirements. Provide fire-rated cabinets in fire-rated wall assemblies.

11-2.2 Interior Wall and Ceiling Finishes. Wall and ceiling finishes shall conform to the requirements of the IBC and NFPA 101, except as follows:

11-2.2.1 Interior finish for exits and exit passageways shall be Class A only.

11-2.2.2 Flame spread (FS) and smoke development (SD) shall be tested in accordance with ASTM E84. Tests shall not exceed FS rating of 25 and SD rating of 50 for Class A materials; FS rating of 75 and SD rating of 100 for Class B materials; and FS rating of 200 and SD rating of 200 for Class C materials. Class C materials shall only be permitted in fully sprinklered buildings.

11-2.2.3 Cellular plastics shall not be used as interior wall and ceiling materials.

11-2.2.4 Carpeting and other textile wall coverings shall only be applied as an interior finish if the material passes the acceptance criteria of the Uniform Building Code (UBC) Standard 8-2, Test Method for Textile Wall Coverings, conducted by a nationally recognized testing laboratory.

11-3 FIRE ALARM. Provide fire alarm and detection system conforming to requirements of NFPA 72 and NFPA 101. Fire alarm system shall be addressable (intelligent) and consist of smoke and/or heat detectors, pull stations, audiovisual devices, control/annunciation panel and tamper and/or flow connection/supervision to the sprinkler system if provided. Provide supervision of fire pump where

fire pump is provided. Placement and installation of audiovisual warning devices shall be in accordance with the UFAS and the ADA. Style or Class of system shall be as required by local code.

The building fire alarm system shall be configured to report to the local fire station serving each facility. The appropriate transmitter/coded master box/telephone interface shall be provided by the contractor.

11-4 Server and Communication Spaces. Provide fire alarm, clean agent (FM200) suppression, and detection system conforming to the latest version of NFPA 75.

12- ENERGY CONSERVATION

Energy conservation alternatives are feasible and should be used. Other portions of the Statement of Work identify the minimum energy requirements. Additional consideration will be given to proposals that exceed those minimum requirements. Clear documentation is required in the proposal when extra consideration is desired. All equipment in the project shall, as a minimum, conform to FEMP or Energy Star criteria. Proposers may be enlisted any of the following energy conserving measures.

12-1 PASSIVE SOLAR APPLICATIONS. Passive solar architectural applications shall routinely be considered as a part of all project designs.

12-1.1 Shading of Glazing. Cooling season shading of glazed surfaces on the east, west and south elevations is required.

12-2 GEOTHERMAL. Geothermal energy sources such as wet or dry steam sources, geothermal hot water, hot dry rock, etc., when determined cost effective, may be considered in regions with established geothermal sources. Each design utilizing geothermal sources shall address the project's environmental impact relating to discharge of hazardous, noncondensable gases or other hazardous effluents, noise emission, heat rejection, ground water contamination, land use, etc.

12-3 ENERGY RECOVERY EQUIPMENT.

12-3.1 Plate heat exchangers. Unit shall be a factory fabricated and tested assembly for stationary air-to-air energy recovery by transfer of sensible heat from exhaust air to supply air stream. Heat transfer surface shall be constructed of aluminum. Enclosure shall be fabricated from galvanized steel and shall include maintenance access provisions.

12-3.2 Rotary heat exchangers. Unit shall be a factory fabricated and tested assembly for air-to-air energy recovery by transfer of sensible heat from exhaust air to supply air stream. Device performance shall be according to ASHRAE 84. Exchange media shall be chemically inert, moisture-resistant, fire-retardant, laminated, nonmetallic material which complies with NFPA 90A. Exhaust and supply streams shall be isolated by seals which are static, field adjustable, and replaceable. Chain drive mechanisms shall be fitted with ratcheting torque limiter or slip-clutch protective device. Enclosure shall be fabricated from galvanized steel and shall include maintenance access provisions.

12-3.3 Heat recovery coils. Coil assembly shall be factory fabricated and tested air-to-liquid-to-air energy recovery system for transfer of sensible heat from exhaust air to supply air stream. System shall deliver an energy transfer effectiveness without cross-contamination with maximum energy recovery at minimum life cycle cost. Components shall be computer optimized for capacity, effectiveness, number of coil fins per inch, number of coil rows, flow rate and frost control. Coils, pumps, controls and piping materials shall conform to Chapter 10 – HVAC**.**

12-3.4 Heat pipe. Device shall be a factory fabricated, assembled and tested, counterflow arrangement, air-to-air heat exchanger for transfer of sensible heat between exhaust and supply streams. Device shall deliver an energy transfer effectiveness without cross-contamination. Heat exchanger tube core shall be seamless aluminum or copper tube with

extended surfaces, utilizing wrought aluminum Alloy 3003 or Alloy 5052, temper to suit. Tubes shall be fitted with internal capillary wick, filled with an ASHRAE 15, Group 1 refrigerant working fluid, selected for system design temperature range, and hermetically sealed. Heat exchanger frame shall be constructed of not less than 16 gauge galvanized steel and fitted with intermediate tube supports, and flange connections. Tube end-covers and a partition of galvanized steel to separate exhaust and supply air streams without cross-contamination and in required area ratio shall be provided. A drain pan constructed of welded Type 300 series stainless steel shall be provided. Heat recovery regulation shall be provided by interfacing with manufacturer's standard tilt-control mechanism for summer/winter operation, regulating the supply air temperature and frost prevention on weather face of exhaust side at temperature indicated. Coil shall be fitted with pleated flexible connectors.

13- SUSTAINABLE DESIGN

13-1 SUSTAINABLE DESIGN GOALS. The goals for improving the sustainability of facilities include: (a) use resources efficiently and minimize raw material resource consumption, including energy, water, land and materials, both during the construction process and throughout the life of the facility, (b) maximize resource reuse, while maintaining financial stewardship, (c) move away from fossil fuels towards renewable energy sources, (d) create a healthy and productive work environment for all who use the facility, (e) build facilities of long-term value, and (f) protect and, where appropriate, restore the natural environment.

13-2 PROJECT REQUIREMENTS. Sustainable design techniques shall be considered as they relate to site and building design, construction, and operation. Techniques, which conserve energy, improve livability, and can be justified by life cycle cost analysis as cost effective are encouraged.

13-2.1 Sustainable design is a requirement of the project but not a proposal evaluation factor. A higher LEED rating than required by the RFP may be offered as betterment. The level of incorporation of sustainable design principles shall be measured through use of the LEED Green Building Rating System for New Construction & Major Renovations (LEED-NC) Version 2.1, developed by the U.S. Green Building Council, available from the following website: http://www.usgbc.org/. A LEED rating of Certified (28-32 points) is required for this project.

13-2.2 Following the award of the contract, during the design phase, the Contractor shall fulfill the requirements of documenting sustainable design. The Contractor shall include sustainable design as a discussion point in design meetings with the government. The Contractor shall provide his LEED Version 2.1 Checklist for this project with a brief written justification for each point achieved. The Contractor shall be responsible for calculations and record keeping to reasonably justify the rating.

13-2.3 Projects that do not achieve a Certified level in the completed project will be considered non-conforming.

13-2.4 Proposals that do not comply with the “Required” criteria listed in the LEED document will be considered non-conforming. For example: LEED Energy & Atmosphere prerequisites 1, 2, 3-Fundamental Building Systems Commissioning, and Minimum CFC Reduction in HVAC&R Equipment are all required. Although no credit points are available, the requirement must be met for contract compliance.

13-2.5 Some LEED categories award potential points (credits) for strategies or decisions that are not within the control of the Contractor. These areas may include Urban Development, Brownfield Redevelopment, etc. See the attached Checklist for points the government has granted with no further justification required (Yes column) or denied (No column) which the government does not view as achievable for this project. The Contractor may count any point in the yes column, but may not claim any in the no column. The Contractor is to determine which points in the center (?) column are in the proposed design.

14- CONTRACTOR PREPARED SPECIFICATIONS

14-1. The successful offeror shall prepare a specification for all work included in the scope of work. The specification shall be tailored to this job. Inapplicable materials shall be deleted. Any reference, description, procedure or other matter required to develop a complete, accurate and concise specification shall be provided. The specification shall include but is not limited to:

14-1.1. A description of the technical requirements

14-1.2. Criteria for determining whether the requirements are met

14-1.3. Quality control requirements and procedures

14-2 Specifications for features of the work shall be organized into divisions and sections in accordance with Construction Specifications Institute (CSI), Master List of Titles and Numbers for the Construction Industry, latest edition.

14-3 Individual specification sections shall be in the format of CSI, Section Format, A Recommended Format for Construction Specification Sections, latest edition. Exceptions are:

14-3.1. Except as otherwise noted in this paragraph, CONTRACTOR PREPARED SPECIFICATIONS, the paragraph SUMMARY shall not be used.

14-3.2. Submittal requirements, submittal procedures and quality control procedures, construction operations shall be those contained in the attached Section 01005, Section 01012, Section 1312, Section 01330, Section 01420, Section 01421, Section 01451, and Section 01560. These specification sections shall be incorporated into the contractor prepared specification packages without editing and shall be coordinated with all other specification sections prepared by the contractor.

14-3.3. Site/Utility requirements, shall be those contained in the attached Section 02231, Section 02300, Section 02315, Section 02316, Section 02360, Section 02370, Section 02510, Section 02531, Section 02532, Section 02621, Section 02630, Section 02722, Section 02741, Section 02921, Section 02930, Section 16375, and Section 16528. These specification sections shall be incorporated into the contractor prepared specification packages without editing and shall be coordinated with all other specification sections prepared by the contractor.

14-3.4. Section 11312,Package Grinder Lift Station: shall be incorporated into the contractor prepared specification packages without editing and shall be coordinated with all other specification sections prepared by the contractor. No deviations shall be allowed to the requirements included in this specification.

14-3.5. Section 13216 and Section 15193 are provided for the Contractor's use. The Contractor shall edit these sections in accordance with the instructional notes and submit them in accordance with Section 01012.

14-4 Contractor prepared specifications shall be reviewed by the Contracting Officer or his designated representatives during the design portion of the project. Contractor will incorporate

all required changes after resolution of comments and prior to work initiation on the next phase of the project.

APPENDIX A

REFERENCES

GOVERNMENT PUBLICATIONS:

New York State	New York State Energy Conservation Construction Code New York State Energy Office Bureau of Codes and Standards Two Rockefeller Plaza Albany, NY 12223
Code of Federal Regulations Government Printing Office Washington, DC 20402	49 CFR 192 Transportation of Natural and other Gas by Pipeline: Minimum Federal Safety Standards 40 CFR 280 Owners and Operators of Underground Storage Tanks 49 CFR 195 Transportation of Hazardous Liquids by Pipeline 10 CFR 430 Energy Conservation Program for Consumer Products

Department of the Navy

Standardization Documents Order Desk 700 Robbins Avenue, Bldg. 4D Philadelphia, PA 19111-5094	MIL-HDBK-1008, Fire Protection for Facilities Engineering, Design, and Construction

U.S. Government Printing Office

Superintendent of Documents U.S. Government Printing Office Washington, DC 20402	U.S. Government Printing Office (GPO) Style Manual

NON-GOVERNMENT PUBLICATIONS:

Air Movement and Control Association 30 W. University Drive Arlington Heights, IL 60004-1893	AMCA 210 (1985) Laboratory Methods of Testing Fans for Rating

Air Conditioning and Refrigeration Institute 4301 North Fairfax Drive Arlington, VA 22203	ARI 310/380 (1993) Packaged Terminal Air-Conditioners and Heat Pumps
	ARI 440 (1998) Room Fan-Coil and Unit Ventilator
	ARI 445 (1987; R 1993) Room Air-Induction Units
	ARI 880 (1998) Air Terminals
American Architectural Manufacturers Association (AAMA) 1827 Walden Office Square, Suite 104 Schaumburg, IL 60173-4268	AAMA 101 Voluntary Specifications for Aluminum, Vinyl and Wood Windows and Glass Doors
	AAMA 605 Voluntary Specification Performance Requirements and Test Procedures for High Performance Organic Coatings on Aluminum Extrusions and Panels
	AAMA 607.1 Voluntary Guide Specifications and Inspection Methods for Clear Anodic Finishes for Architectural Aluminum
	AAMA 1503 Voluntary Test Method for Thermal Transmittance and Condensation Resistance of Windows, Doors, and Glazed Wall Sections
American Bearing Manufacturers Association 1200 19th Street, NW Washington, DC 20036-4303	AFBMA Std 9 (1990) Load Ratings and Fatigue Life for Ball Bearings
	AFBMA Std 11 (1990) Load Ratings and Fatigue Life for Roller Bearings
American Boiler Manufacturers Association (ABMA) 950 N. Glebe Rd, Suite 160 Arlington, VA 22203-1824	ABMA ISEI Industry Standards and Engineering Information

American National Standards Institute 11 West 42 Street New York, NY 10036	ANSI Z21.10.1 (1993; Z21.10.1a; Z21.10.1b; Z21.10.1c) Gas Water Heaters Vol. I, Storage Water Heaters with Input Ratings of 75,000 Btu Per Hour or Less
	ANSI Z124.3 (1995) American National Standard for Plastic Lavatories.
	ANSI Z124.6 (1997) Plastic Sinks
	ANSI Z21.45 (1995) Flexible Connectors of Other Than All-Metal Construction for Gas Appliances
	ANSI C2 (1997) National Electrical Safety Code
	ANSI 70 (1996) National Electrical Code
	ANSI/TIA/EIA-569-A (1998) Commercial Building Standard for Telecommunications Pathways and Spaces
American Society for Testing and Materials 100 Bar Harbor Drive West Conshohocken, PA 19428-2959	ASTM E84 (2000) Surface Burning Characteristics of Building Materials
	ASTM D 2846/D 2846M (1999) Chlorinated Poly(Vinyl Chloride) (CPVC) Plastic Hot- and Cold-Water Distribution Systems
	ASTM D 2513 (1999; Rev. A) Thermoplastic Gas Pressure Pipe, Tubing, and Fittings
	ASTM D 2683 (1998) Socket-Type Polyethylene Fittings for Outside Diameter-Controlled Polyethylene Pipe and Tubing
	ASTM A 53 (1999) Pipe, Steel, Black and Hot-Dipped, Zinc-Coated Welded and Seamless

ASTM A 106 (1999) Seamless Carbon Steel Pipe for High-Temperature Service

ASTM B 88 (1999) Seamless Copper Water Tube

ASTM D 5686 (1995) "Fiberglass" (Glass-Fiber-Reinforced Thermosetting-Resin) Pipe and Pipe Fittings, Adhesive Bonded Joint Type Epoxy Resin, for Condensate Return Lines

ASTM D 2241 (1996b) Poly(Vinyl Chloride) (PVC) Pressure-Rated-Pipe (SDR Series)

ASTM D 1784 (1999a) Rigid Poly(Vinyl Chloride) (PVC) Compounds and Chlorinated Poly(Vinyl Chloride) (CPVC) Compounds

ASTM D 1248 (1998) Polyethylene Plastics Molding and Extrusion Materials

ASTM C 591 (1994) Unfaced Preformed Rigid Cellular Polyisocyanurate Thermal Insulation

ASTM C 518 (1998)Steady-State Heat Flux Measurements and Thermal Transmission Properties by Means of the Heat Flow Meter Apparatus

ASTM A 134 (1996) Pipe, Steel, Electric-Fusion (Arc)-Welded (Sizes NPS 16 and Over)

ASTM A 135 (1997c) Electric-Resistance-Welded Steel Pipe

ASTM A 139 (1996el) Electric-Fusion (Arc)-Welded Steel Pipe (NPS 4 and over)

ASTM A 36/A 36M (2000) Carbon Structural Steel

	ASTM D 2310 (1997) Machine-Made "Fiberglass" (Glass-Fiber-Reinforced Thermosetting-Resin) Pipe
	ASTM D 2996 (1996; Rev. A) Filament-Wound "Fiberglass" (Glass-Fiber-Reinforced Thermosetting Resin) Pipe
American Society of Heating, Refrigerating and Air Conditioning Engineers 1791 Tully Circle. NE Atlanta, GA 30329-2305	ASHRAE 90.1 (1989; 90.1b; 90.1c; 90.1d; 90.1e; 90.1g; 90.1i 90.11-1995; 90.1m-1995; 90.1n-1997) Energy Efficient Design of New Buildings Except Low-Rise Residential Buildings
	ASHRAE Hdbk-IP (1997) Handbook, Fundamentals I-P Edition
American Society of Mechanical Engineers International Three Park Place New York, NY 10016-5990	ASME B31.8 (1995) Gas Transmission and Distribution Piping Systems
	ASME B16.11 (1996) Forged Fittings, Socket-Welding and Threaded
	ASME B31.1 (1998; Addenda 1999 and 2000) Power Piping
	ASME BPVC SEC VII (1995; Addenda 1995, 1996, and 1997) Boiler and Pressure Vessel Code: Section VII Recommended Guidelines for the Care of Power Boilers
	ASME (1996) Pipe Flanges and Flanged Fittings NPS 1/2 Through NPS 24
Architectural Woodwork Institute 1952 Isaac Newton Square W. Reston, VA 20190	AWI Quality Standards (1999) 7th Edition, Version 1.2
Associated Air Balance Council 1518 K Street NW, Suite 708 Washington, DC 20005	AABC MN-1 (1989) National Standards for Testing and Balancing Heating, Ventilating, and Air Conditioning Systems

Builders Hardware Manufacturers Association 355 Lexington Ave, Suite 1700 New York, NY 10017-6603	ANSI/BHMA A156.4 (2000) American National Standards for Door Controls - Closers…
Council of American Building Officials 5203 Leesburg Pike, Suite 708 Falls Church, VA 22041	CABO A117.1 (1992; Errata Jun 1993) Accessible and Usable Buildings and Facilities
Electronic Industries Association (EIA) 2500 Wilson Blvd Arlington, VA 22201-3834	EIA/TIA 568-B (2001) Commercial Building Telecommunications Cabling Standards EIA/TIA 569-A (2001, amendment 5) Commercial Building Standard for Telecommunications Pathways and Spaces
Illuminating Engineering Society of North America 120 Wall Street, 17th Floor New York, NY 10005-4001	IESNA RP-8 (1983; R 1993) Roadway Lighting IES LHBK (1993) Lighting Handbook, Reference and Application
Institute of Electrical and Electronics Engineers Inc. (IEEE) 445 Hoes Lane, P.O. Box 1331 Piscataway, NJ 08855-1331	Standard for Use of the International System of Units (SI): the Modern Metric System
International Approval Services (IAS) 8501 E. Pleasant Valley Rd Cleveland, OH 44131	IAS Directory (1999) IAS Directory of AGA & CGA Certified Appliances and Accessories
International Association of Plumbing and Mechanical Officials 20001 Walnut Drive South Walnut, CA 91789-2825	IAPMO Z124.1 (1995) Plastic Bathtub Units IAPMO Z124.3 (1995) Plastic Lavatories IAPMO Z124.5 (1997) Plastic Toilet (Water Closets) Seats IAPMO Z124.9 (1994) Plastic Urinal Fixtures

International Code Council, Inc. 5203 Leesburg Pike, Suite 708 Falls Church, VA 22041-3401	ICC (2000) International Building Code
International Conference of Building Officials 5360 Workman Mill Road Whittier, CA 90601-2298	ICBO (1997) Uniform Building Code
National Association of Corrosion Engineers International 1440 South Creek Drive Houston, TX 77084-4906	NACE RP0169 (1996) Control of External Corrosion on Underground or Submerged Metallic Piping Systems NACE RP0185 (1996) Extruded, Polyolefin Resin Coating Systems with Soft Adhesives for Underground or Submerged Pipe
National Association of Plumbing - Heating – Cooling Contractors 180 S. Washington Street Falls Church, VA 22046	NAPHCC Plumbing Code (1996) National Standard Plumbing Code
National Electrical Manufacturers Association 1300 N 17th Street, Suite 1847 Rosslyn, VA 22209	NEMA C12.1 (1995) Code for Electricity Metering NEMA LD3 High Pressure Decorative Laminates NEMA PB 1 (1995) Panelboards
National Environmental Balancing Bureau 8575 Grovemont Circle Gaithersburg, MD 20877-4121	NEBB Procedural Stds (1991) Procedural Standards for Testing Adjusting Balancing of Environmental Systems
National Fire Protection Association One Batterymarch Park Quincy, MA 02269-9101	NFPA 10 (1998) Standard for Portable Fire Extinguishers NFPA 30 (2000) Flammable and Combustible Liquids Code NFPA 31 (1997; TIA 97-11) Installation of Oil Burning Equipment NFPA 54 (1999) National Fuel Gas Code NFPA 58 (1998; Errata 58-98-1) Liquefied Petroleum Gas Code

	NFPA 70 (1999) National Electrical Code
	NFPA 80 (1999) Standard for Fire Doors and Fire Windows
	NFPA 90A (1993) Installation of Air Conditioning and Ventilating Systems
Plumbing and Drainage Institute 45 Bristol Drive, Suite 101 South Easton, MA 02375	PDI G 101 (1996) Testing and Rating Procedure for Grease Interceptors with Appendix of Sizing and Installation Data
	PDI WH201 (1992) Water Hammer Arrestors
	PDI WH 201 (1992) Water Hammer Arresters
Sheet Metal and Air Conditioning Contractor's National Association PO Box 221230 Chantilly, VA 20153-1230	SMACNA HVAC Duct Const Stds (1995; Addenda Nov 1997)) HVAC Duct Construction Standards - Metal and Flexible
	SMACNA Arch. Manual (1993; Errata; Addenda Oct 1997) Architectural Sheet Metal Manual
Steel Door Institute (SDI) 30200 Detroit Road Cleveland, OH 44145-1967	ANSI A250.8/SDI 100 Standard Steel Doors and Frames
Steel Tank Institute (STI) 570 Oakwood Rd Lake Zurich, IL 60047	STI P3 Underground Steel Storage Tank Protection
Underwriters Laboratories 333 Pfingsten Road Northbrook, IL 60062-2096	UL 430 (1994; Rev thru Nov 1996) Waste Disposers
	UL 567 (1996; Rev thru Oct 1997) Pipe Connectors for Petroleum Products and LP-Gas
	UL 1746 (1993; Rev thru Sep 1998) External Corrosion Protection Systems for Steel Underground Storage Tanks
	UL 1995 (1995; Rev thru Aug 1999) Heating and Cooling Equipment

UL 507 (1999) Electric Fans

UL 608 Modular Vault Panels

UL 746C (1995; Rev thru Jul 1999) Polymeric Materials - Use in Electric Equipment Evaluations

UL 705 (1994; Rev thru Feb 1999) Power Ventilators

UL 1316 (1994; Rev Apr 1996) Glass-Fiber-Reinforced Plastic Underground Storage Tanks for Petroleum Products, Alcohols, and Alcohol-Gasoline Mixtures

UL 507 (1999) Electric Fans

UL 608 Modular Vault Panels

UL 746C (1995; Rev thru Jul 1999) Polymeric Materials - Use in Electric Equipment Evaluations

UL 705 (1994; Rev thru Feb 1999) Power Ventilators

UL 1316 (1994; Rev Apr 1996) Glass-Fiber-Reinforced Plastic Underground Storage Tanks for Petroleum Products, Alcohols, and Alcohol-Gasoline Mixtures

Attachments to the Statement of Work
Table of Contents

Attachment 1 - Art Commission Requirements

Attachment 2 - Furniture Requirements

Attachment 3 - Drawings

Attachment 4 - Technical Specifications

Attachment 5 - Geotechnical information

Attachment 6 - Site Photos

Attachment 7 - Leed Checklist

Attachment 1 - Art Commission Requirements

New York City Department of Environmental Protection
East of Hudson Administrative Facility

January 22, 2003

Exterior Color Schedule

Material	Manufacturer and Product Number
Glass	Viracon VT-2-30
Brick Field	Belden Bismarck Blend (Ironspot)
Brick Accent	Belden 671 Smooth (red)
Concrete	Arriscraft Olive
Roof	Preweathered Galvalume
Windows, Doors, Frames	Silver UC 51131 XL

(As approved by the Art Commission)

Products are used to define the quality, color and texture. Equal materials matching the color and texture may be acceptable.

Elevation of NYC, DEP, EOH Administration Building.

ATTACHMENT 2 - FACILITY FURNITURE REQUIREMENTS

Re: New York City Department of Environmental Protection
East of Hudson
Administration Building

Subject: Furniture Systems

The following pages contain a generic listing of the furniture requirements for the facility included in this contract. Proposers shall review the list and provide a coordinated proposal for the provision of furniture in the completed administration building. The proposed furniture package shall address the following concerns:

- Provide coordinated overall style, color, and presentation for the facility.
- Provide for maximum durability while maintaining cost conscious features.
- Select appropriately sized pieces based on experience and facility size.

The offeror shall include catalog information for all materials and furniture proposed for installation in the Mt. Pleasant facility.

Individual Item Descriptions:

Desks: *Plastic laminate finish, 1" thick particle board construction, double pedestal w/three box drawers in one pedestal and one box drawer and one file drawer in the other pedestal; center ergonomic keyboard tray; nylon roller drawer slides; all drawers, even center drawer shall be lockable, all lockable drawers in the desk shall be keyed alike, each desk shall be keyed differently, drawers shall be front locking; 30- ¾" wide knee space. Provide two keys with each desk.*

Approx Size: 60"W x 30"D x 29-1/2"H

Systems Furniture Workstation: *Herman Miller AO2 or approved equal. Provide a workstation with seated privacy, high teaming, and 36 square feet of floor space. Shall have freestanding drawer unit (box/box/file), work surfaces on two sides that are adjustable in 1" increments, and Lay in cabling & 4 circuit and 8 wire electrical. Fabric wrap acoustical panel, structure for hanging work surfaces and overhead storage, and base covers for easy access to electrical and data cabling. Top, sides, and exposed ends anywhere on low panels shall have manufactures standard finish caps.*

Approx Size: 6' x 6' x 51" Low

Communications Table: *Winsted Corporation Digital Desks, Corner Digital Desk, Model E4525 or approved equal. Provide a desk that supports monitors (minimum of three flat screen monitors), computers, and multi media systems. System shall be comprised of ample work surface and sufficient monitor risers adjustable to the appropriate height. Monitor risers shall be at least 20 inches deep and capable of adjusting from 3 ½" to 10 ½" in increments of ½". Space for computer cpu's or system towers shall exist in a built in cpu tower support well, mount such that equipment mounts under the desk worksurface. The desk system shall have a minimum 1" thick medium density core(MDF) core laminated work surface and the worksurface shall include a rubber contoured edging to act as an edge guard. Desk shall have a raceway cable management system that provides logical, discrete routing of video/monitor cables. Wide channel support legs shall provide for cable routing. Monitor riser support legs shall extend from riser to the floor for strength and balance. Desk shall be constructed of a steel superstructure framework. Desk legs and framework shall be made of 14-gauge steel. Legs shall have the capability of leveling. Desk shall have built in keyboard pullout. All components shall be shipped either fully assembled or knocked down. All assembly of desks must be possible on site construction without welding or carpentry work. All steel components, including cpu tower supports, pullout keyboard shelves and accessories shall have zinc oxide wash primer with black baked on textured enamel paint finish. Work surfaces and monitor risers are to be black granite laminate. Desk shall have a warranty that is a written ten-year guarantee against defects of all component parts, material, and workmanship under normal use.*

Approx Size: 74" W x 74"D x 30"H. Corner table, See drawings.

Table; 96/42: *Large Conference Table. All wood table.*

Approx Size: 96"W x 42"D x 30"H

Table, 72/36: *Small Conference Table. All wood table.*

Approx Size: 72”W x36”D x30”H

Table, 48/36: *All wood table.*

Approximate Size: 48”W x 36”D x30”H

Table, 36/24, Bolted : *All wood table.*

Approx Size: 36”W x 24”D x 30”H

Table, 72/24: *Small Multi- purpose Conference Table. All wood table. Provide openings in table surface for computer and data cord access.*

Approx Size: 72”W x24”D x30”H

Coffee Table: *All wood, low/coffee table. Storage drawer, magazine sized.*

Approx Size: 36”W x 24”D x 18”H, and 36” Diam. x 18H

Table, circular 42” Diam.: *All wood table.*

Approximate Size: 42”Diam. x 30”H

Table, Drafting: *Drafting table features a 30" x 42" white PVC tabletop and footrest bar for user comfort. Includes side storage try to help keep the drawing table organized.*

Coat Rack: *All metal rack.*

Approx Size: 23 ½” Dia. x 76”H

Metal Shelving: *Closed Metal Shelving units with a base, solid sides and backs. All metal units. Units shall have a minimum of five (5) adjustable, 18 gauge cold rolled steel shelves with full welded box formation in front and back of the and have formed channels on both ends. All corners shall be lapped and welded for additional strength. Shelves shall be adjustable on 1” centers. Posts shall be a minimum 1” x 2” and 14 gauge. Each shelf shall have a minimum shelf capacity of 560lbs.*

Approx Size: 36” W x 18”D x 63”H

Chair; Ergonomic: *High back ergonomic chair with arms. The chair shall have a minimum of seven different adjustments including finger tip levers for tilt control and seat height. Seat shall swivel and recline. Seat pressure tension shall adjust from soft to hard and the back shall adjust up and down as well as towards and away from the center of the seat. Five prong pedestal base with dual wheel carpet casters.*

Chair; Stackable: *Guest chair with arms. 100% Solid Hard Wood back, arms, legs, feet, and frame. Heavy Duty fabric upholstry.*

Approx Size: 23"W x 231/4"D x 37"H

Bar Stool: *Bar Stool with wood seat and brass trim on Foot Rest. Traditional swivel bar stool shall be designed withstand heavy use. Provide a slatted solid wood back, wood seat (that swivels) and front reveal strip. 100% solid Hard Wood.*

Approx Size: 18"W x 20"D x 46.25"H

Couch: *Office Furniture Couch. Attached seat and back cushions. Tight seat over no-sag springs. Fully-upholstered with exposed wooden legs. High-density foam seat and back cushions for comfort and long-term resiliency. Vinyl upholstery. Legs shall be 100% Solid HardWood.*

Approx Size: 80"W x 34"D x 34"H

File Cabinet; Two-Drawer, Under Desk - Wide: *Letter storage/lateral – Contains two horizontal file drawers with removable file hangers. Adjustable leveling glides. Constructed of 1" thick particle board with plastic laminate. Each drawer is lockable, keyed alike.*

Approx Size: 36"W x 24"D x 32" H

File Cabinet; Three-Drawer, Under Desk – Narrow: *Letter Storage/vertical, four drawer. Contains four deep file drawers and rests upon adjustable leveling glides. Dovetail construction, rectangular base. 3 Drawer. Each drawer features full length follow block and is lockable, all keyed alike.*

Approx Size: 21"W x 24"D x 48"H

File Cabinet; Three Drawer – Wide: *Letter storage/lateral – Contains four horizontal file drawers with removable file hangers. Adjustable leveling glides. Constructed of 1" thick particle board with plastic laminate. Each drawer is lockable, keyed alike.*

Approx Size: 36"W x 24"D x 64" H

File Cabinet; Four Drawer – Narrow: *Letter Storage/vertical, four drawer. Contains four deep file drawers and rests upon adjustable leveling glides. Dovetail construction, rectangular base. Each drawer features full length follow block and is lockable, all keyed alike.*

Approx Size: 21"W x 24"D x 64"H

File Cabinet; Five Drawer – Low Wide: *Letter storage/lateral – Contains five horizontal file drawers with removable file hangers. Adjustable leveling glides. Constructed of 1" thick particle board with plastic laminate. Each drawer is lockable, keyed alike.*

Approx Size: 42"W x 24"D x 60" H

Storage Cabinet; - Mobile Metal Cabinet: *Storage cabinet shall be designed to keep valuables under lock and key. Heavy-duty cabinets shall be utilized as maintenance or workstations on wheels and made of 14 gauge all-welded steel. Cabinet shall have Double Doors and 1 shelf left and Right, and a 3"H backstop. Doors swing on full-piano hinge and single point locking handle. Cabinet shall roll on 5" rubber casters (2 rigid, 2 swivel). Enamel finish. Provide locking handle with cylinder lock keyed.*

Approx Size: 45"W x 21"D x 34"H

Map Wall: *Provide two (2) track, three (3) Panel, Horizontal Sliding Map Panel Unit that maximizes wall space and doubling the working area. Sliding panels shall hang from nylon carrier rollers, top-suspended and glide easily over heavy-duty anodized aluminum track with trim that includes a 2" cork maprail at the top. Panels shall be durable whiteboard,*

white porcelain enamel-on-steel Re-Mark-Able Board. Housing and trim shall be satin anodized aluminum.

Approx Size: 4' H x 10' L

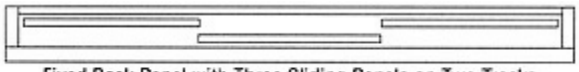

Fixed Back Panel with Three Sliding Panels on Two Tracks

Marker Board; Small: *Magnetic, white porcelain enamel-on-steel Re-Mark-Able Board with a 1 ¾" solid oak frame in natural finish. Five-piece construction includes a complete four-sided frame and a wide full-length marker rail attached to bottom frame. Four mitered corners are glued and clamp-nailed for strength. Full-length marker rail. Include an dry-erase markers, eraser, and special heavy-duty mounted hanging brackets.*

Approx. Size: 4'x3'

Marker Board; Large: *Magnetic, white porcelain enamel-on-steel Re-Mark-Able Board with a 1 ¾" solid oak frame in natural finish. Five-piece construction includes a complete four-sided frame and a wide full-length marker rail attached to bottom frame. Four mitered corners are glued and clamp-nailed for strength. Full-length marker rail. Include an dry-erase markers, eraser, and special heavy-duty mounted hanging brackets.*

Approx. Size: 4'x8'

Tack Board: *Thick resilient cork reseals when pins are removed. Framed in natural oak or anodized aluminum. Includes factory mounted hangers.*

Approx. Size: 4'x3'

Lamps: *Convenient organizer lamp with data port. Adjustable gooseneck, on/off switch, black metal shade and black plastic base. UL listed for 60 watts, bulb included.*

Podium: *Constructed of ¾" particle board laminated with high pressure laminate. Mounted on 4 casters. Edges are banded with matching T-mold. Contains a center shelf, adjustable. Top is slanted to provide easier access to notes.*

Approx Size: 24"W x 20 ½"D x 45" H

Bench: *Freestanding and movable Bench unless noted otherwise. Heavy duty, zinc plated, painted steel pedestal. Maple butcher block top minimum 1 ¼" Thick x 9 1/2" Wide unless noted otherwise. Length varies see Drawings. Urethane finish. Benches shall not be bolted in place except where indicated. Benches longer than 9' shall have a minimum of three pedestals and as recommended by manufacturer.*

Lockers: *Provide custom sized lockers with maximum security, maximum storage space, and privacy for personal storage. Strong, one-piece, heavy 14-gauge steel construction, all welded for strength. Powder coated paint finish. Closed base. Number plates. Recessed handles w/padlock provision. Louvered doors with continuous hinge. Two single and one double hook in each locker below one hat shelve at top. Use standalone or link together for larger installations.*

Dimensions: 24"w x 24"d x 74"h

Open Shelf Metal Lockers: *Provide standard sized 'stadium' type metal locker, 16 gauge steel, all welded construction, with an open front and visually perforated sides to allow full ventilation. Lockers shall have integral 4" base at the bottom and provide a security box fastened to a full width shelf at the top. Lockers shall have a footlocker built in with a hinged, reinforced seat at the base. Both compartments shall be lockable to secure valuable items. Storage shall include a minimum 2 coat hooks and a full width coat rod provide to store clothing and equipment. Footlocker shall be recessed for an external padlock, act as a reinforced seat, and shall have a stainless steel strike plate to protect the finish. Finish shall be baked enamel.*

Dimensions: 33"w x 24"d x 72"h

Refrigerator: *Comply with UL 250, Household Refrigerators and Freezers and shall bear the EPA "Energy Star" certified label. Provide refrigerator with frostproof top freezer, automatic defrosting, and ice maker. Refrigerator shall have two vegetable bottom baskets, at least four adjustable shelves, at least two shelves and egg container in door; freezer compartment shall contain separate interior shelves, multiple door shelves, and ice maker. Provide reversible (left swing and right swing interchangeable) doors. Refrigerators shall conform to the energy compliance standards of 10 CFR 430, including those refrigerators manufactured before the code took effect. The use of refrigerants with an Ozone Depletion Potential (ODP) of .05 or less is required. Minimum refrigerator volume and maximum energy use are as follows:*

Volume: 21 CF

Energy Efficiency: 722 kWh/yr.

Small Refrigerator: *Counter Height, 3.6 Cubic Foot Office Refrigerator with Crisper. Full-range temperature control. Includes frozen food compartment with one ice tray. Manual defrost. Polyurethane foam insulated. Unit shall be 2001 energy compliant, comply with UL 250, and shall bear the EPA "Energy Star" certified label. Triple-decker door storage. Two slide-out shelves. Glass-lidded crisper; top serves as a fixed shelf. Flip-up freezer door. Reversible door coated to eliminate fingerprints. Stainless Steel door.*

Approx Size: 18-5/8"W x 19-7/8"D x 33-1/2"H

Stove: *Range and oven. Ranges shall be 30 inches wide and provided with porcelain enamel cooktop, oven, clock and timer, oven light, and cooking surface light. Self Cleaning*

Oven shall have black glass window door, broiler pan, and self-lock racks. Four cast iron surface elements of minimum 4,500 total watts at 208 volts or 230 volts, infinite control switches, and range indicating "on" lights. Equip oven with one minimum 2,000-watt tubular broil element and one minimum 700-watt tubular bake element, oven indicating light, automatic oven heat control, and utensil drawer.

Microwave: *UL 923, Microwave Cooking Appliances, built in, with black glass window door, minimum 1.5 cubic foot capacity, stainless steel interior, automatic oven light, built-in browning element, 10 power levels, automatic temperature controllers, minimum two automatic memory levels, digital time controllers, and electronic touch-control panel.*

Firearms Safe – Explosion Proof: *Holds 10 rifles or shotguns up to 54" tall. Foam padded sides and bottom. 4 large foam padded removable steel shelves – reinforced door – 3 point locking system with drill resistant key coded lock – includes fastening hardware for bolting to floor and wall. Stack-On Model GCD-924 or approved equal.*

Approx Size: 32"W x 13 ½"D x 55"H

Nautilus Machine: *Nautilus NS 700 and NS 50 bench or approved equal. NS 700 Gym Features are as follows: Two stations with individual weight stacks that enable two people to work out simultaneously.*

The NS 700 combines one traditional fixed path station and one free floating cable station using two 200 lb. weight stacks and NS 50 bench adds workout variety.

- *11-position press arm with multiple grip positions to allow performance of a variety of exercises*
- *Dual-pivot pulleys rotate freely through 360 degrees to simulate free weights.*
- *The Fully adjustable pulleys on the cable station allow adjustment up and down and pivot in and out with ease to accommodate over 20 different exercises.*
- *Adjustable Leg Extension / Leg Curl station provides a biomechanically correct lower body workout. Allows users to do both leg curls and extensions in the seated position and also cuts the leg curl workout time in half from that of gyms that require you to stand up since both legs are worked at the same time.*
- *Two 200 pound weight stacks.*

- *Fully adjustable seat bottom and back allow for a wide range of users.*
- *Dimensions: 83" H x 70" L x 96" W*

Construct from gym-quality materials:

- *11-guage steel frame*
- *High precision bearings and bushings in all pivots*
- *Military-spec cables*
- *4 1/2" pulleys in all critical areas*
- *2x Balanced plate systems for workouts from 10lbs to 200lbs*
- *double top-stitched and fitted 2" foam covered cushions*

Treadmill: *18-inch x 55-inch treadbelt for smooth, natural strides. 2.5 horsepower motor. Control panel to monitor speed, time, pace, calories burned. Features listed are typical.*

Exercise Mats: *Conveniently mats shall unfold to a full 22" x 58". The mat shall be constructed of closed cell EVA foam that provides a comfortable surface for exercising. A microdry suede cover wicks moisture away and is permanently treated for anti-bacterial protection. Washable. Colors: selected by COR.*

19” TV: *Commercial grade television. 19 Inch television shall meet Energy Star and have Parental Control (V-Chip), MPI Plug, Sleep Timer/Wake-up, Channel Preview, Power Management, Power On/Off Indicator, Channel Labels, Spill Proof Cabinet, Integral Invisible Bracket and Remote Control. TV shall be CATV cable ready. TV shall be suitable for mounting to commercial grade television mounting bracket. TV Shall have the Zenith Advanced SuperPort Card or approved equal equipment standard. Card shall features 2-way control and feedback over the CATV cable, allowing interactive system control. Provide IC-RC Wireless IR Remote for user control and system setup and Internal buzzer used for system-activated alerts.*

Approx Size: 16.8 Inch H x 26.2 Inch W x 18.8 Inch D

27” TV: *Commercial grade television. 27 Inch television shall meet Energy Star and have, S-Video, Front AV Jacks, Parental Control (V-Chip), MPI Plug, Sleep Timer/Wake-up, Channel Preview, Power Management, Power On/Off Indicator, Channel Labels, Spill Proof Cabinet, Stereo, and remote control. TV shall be suitable for mounting to commercial grade television mounting bracket. TV Shall have the Zenith Advanced SuperPort Card or approved equal equipment standard. Card shall features 2-way control and feedback over the CATV cable, allowing interactive system control. Provide IC-RC Wireless IR Remote for user control and system setup and Internal buzzer used for system-activated alerts.*

Approx Size: 23.8 Inch H x 26.4 Inch W x 18.5 Inch D

Flat Screen TV: *Wall mounted, Professional LCD 37” Flat Panel Monitor. Monitor shall be a Sharp LC-M3700 TFT large flat panel LCD monitor or approved equal. Monitor shall be suitable for digital signage and public display applications. Rich saturated color shall be produced through independent color control. Provide features as follows:*

Manufacturers Ethernet to RS-232C Network Converter shall be included. Unit shall include manufacturers wall mount bracket.

Screen Size	*37-inch diagonal/Black TFT*
Matrix Resolution	*HD Panel 1366hx768v 3.15 million dots*
Aspect Ratio	*TRUE 16 x 9*
Contrast Ratio	*800:1*
Viewing Angle	*170 (left/Right)* *170 (up/down)*
Features	*Black TFT/replaceable Fluorescent backlight* *Bright Pixel Elimination*
Lamp Life	*Normal mode:* *60,000 hrs landscape* *40,000 hrs portrait*
Colors	*16.7 million colors*
Brightness	*430 nit (cd/m2)*
Power	*120VAC / 60 Hz*
Regulatory approvals	*UL 1492, FCC Class A*

Resolution Capabilities	*VGA/SVGA/XGA/SXGA*	
PC Compatibility		
Video Standards	*NTSC, PAL, SECAM, DTV 1080i/720p/540p/480p/480i*	
Control Panel	*Onboard and remote*	
Warranty	*1 year parts and labor*	
Terminals	*Input 1*	*Composit BSN or S-Video (4 pinDIN), Audio L/R (RCA)*
	Input 2/Output Selectable	*Composite (RCA) Audio L/R (RCA)*
	Input 3	*5 BNC input; selectable: Component (Y, Pb, Pr) or Analog RGB (R,G,B,H,V), Stereo Audio (3.5mm)*
	Input 4 PC input	*Selectable: Analog RGB (15 pin D-Sub) or Digital (DVI-D), Stereo Audio (3.5mm)*
	Output PC	*RGB Analog/Component Signal from Input 3 and RGB Analog Signal from Input 4 (15 pin D-Sub)*
	Video Output	*Composite (BNC)*
	RS-232C In/Out	*9 Pin D-Sub x 2*

Approx Weight: 42lbs

Approx Size: 37.5 Inch H x 22.5 Inch W x 3.9 Inch D

East of Hudson Administration Building
Furniture Summary

Item	EOH			
	BAS	1ST	2ND	TOTAL
furniture				
desk, 60x30	3	13	13	29
couch	-	-	1	1
desk lamp – task lighting	3	14	13	30
tables:				
table, 96/42	-	-	1	1
table, 72/36	-	1	-	1
table, 48/36	-	2	7	9
table, 36/24, bolted	-	2	2	4
table, 72/24	-	-	18	18
coffee table	-	1	1	2
table, circular 42” diam.	1	1	2	4
table, drafting	1	-	-	1
table, communications	-	3	-	3
chairs:				
office chair - ergonomic	3	17	22	42
stackable chair	12	47	76	135
bar chair	-	2	-	2
file cabinets:				
two drawer, under desk - wide	2	4	5	11
three drawer, under desk - narrow	1	3	4	8
three drawer – low wide	3	19	15	37
four drawer - narrow	-	-	-	-
five drawer – low wide	3	12	13	28
dry-marker boards:				
dry-marker board	2	12	15	24
lg dry-marker board	1	6	-	7
map wall	-	1	1	2
other boards:				
bulletin board w/ locking glass closure	-	1	-	1
tack boards	2	10	11	23
misc:				
podium	1	1	1	3

Item	EOH			
	BAS	1ST	2ND	TOTAL
misc cont.				
CAB – storage cabinet	-	-	1	1
firearms safe – explosion proof	1	-	-	1
nautilus	1	-	-	1
treadmill	2	-	-	2
mats	8	-	-	8
wd bench B1	4	-	-	4
wd bench B2 – various lengths	9	-	-	9
wd bench B2 – bolted	-	2	-	2
coat rack	-	1	6	7
shower curtains – anti-bacterial	3	-	1	4
book shelves	4	9	12	25
equipment:				
refrigerator	-	1	-	1
small refrigerator	-	-	2	2
microwave	-	2	-	2
Electronic screen w/ ceiling mntd projector	-	1	4	5
range with oven	-	1	-	1
television, 19”	-	2	2	4
television, 27”	-	1	2	3
television, flat screen	-	-	3	3
lockers:				
locker 24” x 24”	72	1	3	76
open shelf metal locker	10	-	-	10
metal shelves	20	6	18	44

Attachment 3 - Drawings

Drawing List:

T-001	- Title Sheet
A-001	- Basement Plan
A-002	- First Floor Plan
A-003	- Second Floor Plan
A-004	- Elevations and Section
A-005	- Basement Furniture Plan
A-006	- First Floor Furniture Plan
A-007	- Second Floor Furniture Plan
A-008	- Elevations

Site/Utility Design

D-001	- Data Sheet
L-100	-Landscape Plan
L-101	-Landscape Details, Notes & Schedule
C-100	-Overall Plan
C-101	-Existing, Demolition, and E & S Plan
C-102	-Layout Plan
C-103	-Grading and Drainage
C-104	-Drainage Area Plan
C-105	-Utility Plan
C-500	-Details and General Notes
C-501	-Details and General Notes
C-502	-Details and General Notes
C-503	-Details and General Notes
E-101	-Electrical Site Plan
E-102	-Electrical Exterior Details
E-103	-Electrical Exterior Details

U.S. ARMY CORPS OF ENGINEERS
NORFOLK DISTRICT

NEW YORK CITY
DEPARTMENT OF ENVIRONMENTAL PROTECTION
EAST OF HUDSON ADMINISTRATION BUILDING

INDEX OF DRAWINGS

SHEET NO.	TITLE
T-001	TITLE SHEET
A-001	BASEMENT PLAN
A-002	FIRST FLOOR PLAN
A-003	SECOND FLOOR PLAN
A-004	ELEVATIONS AND SECTION
A-005	BASEMENT FURNITURE PLAN
A-006	FIRST FLOOR FURNITURE PLAN
A-007	SECOND FLOOR FURNITURE PLAN
A-008	ELEVATIONS
D-001	DATA SHEET
L-100	LANDSCAPE PLAN
L-101	LANDSCAPE DETAILS, NOTES & SCHEDULE
C-100	OVERALL PLAN
C-101	EXISTING , DEMOLITION, AND E & S PLAN
C-102	LAYOUT PLAN
C-103	GRADING AND DRAINAGE PLAN
C-104	DRAINAGE AREA PLAN
C-105	UTILITY PLAN
C-500	DETAILS AND GENERAL NOTES
C-501	DETAILS AND GENERAL NOTES
C-502	DETAILS AND GENERAL NOTES
C-503	DETAILS AND GENERAL NOTES
E-101	ELECTRICAL SITE PLAN
E-102	ELECTRICAL EXTERIOR DETAILS
E-103	ELECTRICAL EXTERIOR DETAILS

US Army Corps of Engineers
Norfolk District

REV.	DATE	DESCRIPTION	BY	APP.

DESIGNED: BCB
CHECKED: TLD
DATE: 16-AUG-04
DRAWN: KAB
SUBMITTED: TLD
SCALE: AS SHOWN
PROJECT NO. 010HH
NORFOLK DISTRICT FILE NO. XXXXXXXX-
DRAWING NO. XXX-XX-XX
SPECIFICATION NO. XX
Last worked on:
File name:
Plot scale: 1:1

NORFOLK DISTRICT
CORPS OF ENGINEERS
NORFOLK, VIRGINIA

August 16, 2004

CITY OF NEW YORK
DEP
EAST OF HUDSON ADMINISTRATION BLDG.
TOWN OF MOUNT PLEASANT

TITLE SHEET

T-001
SHEET 1 OF 25

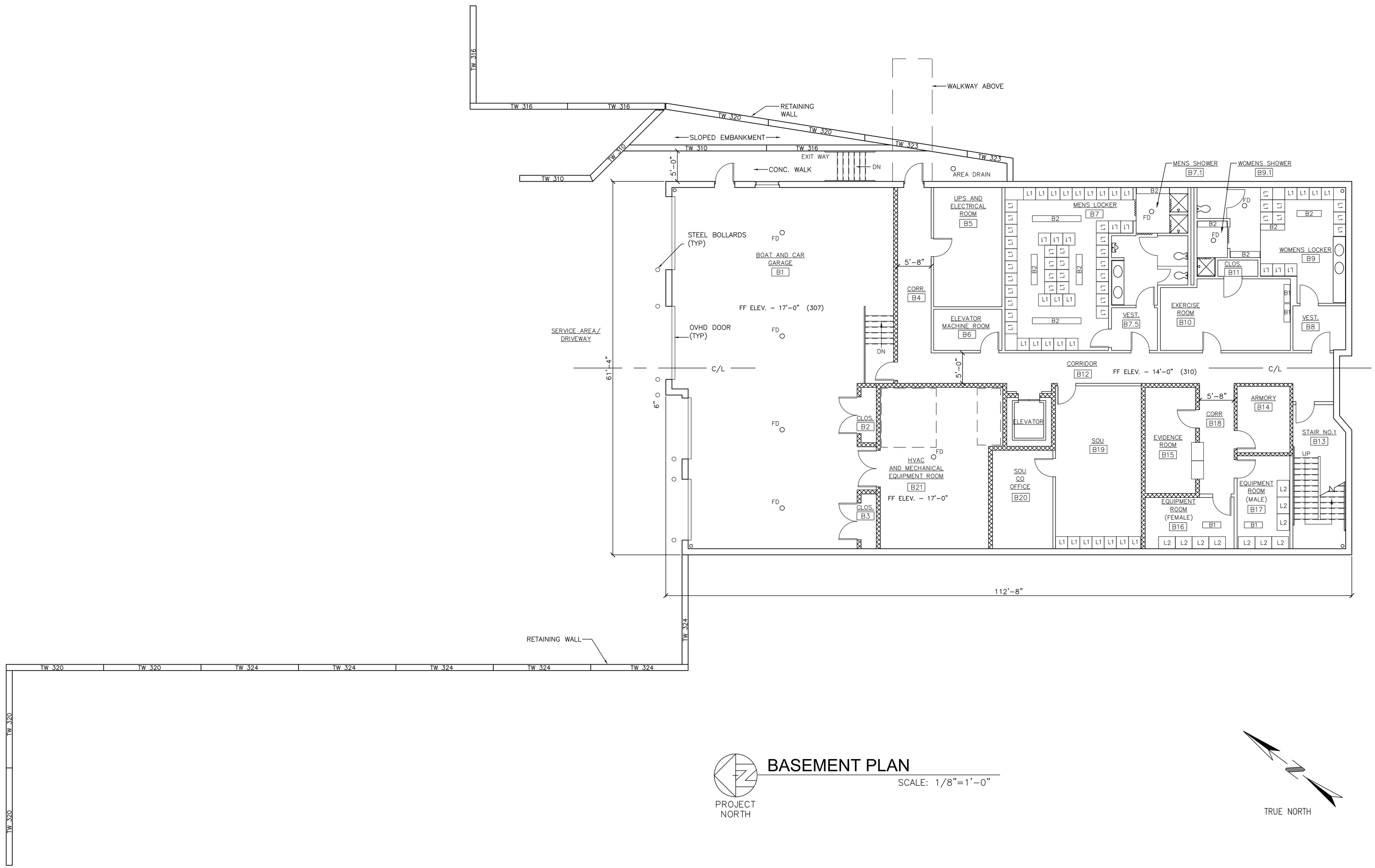

BASEMENT PLAN

SCALE: 1/8"=1'-0"

GRAPHIC SCALES

1/8" = 1'-0" 0' 4' 8' 16' 24'

US Army Corps of Engineers
Norfolk District

REV.	DATE	DESCRIPTION	BY	APP.

DESIGNED: BCB
DRAWN: KAB
CHECKED: TLD
SUBMITTED: TLD
DATE: 16-AUG-04
SCALE: AS SHOWN
PROJECT NO. 01HH
DRAWING NO. XX-XX-XX-XX
NORFOLK DISTRICT FILE NO. XXXXXXX-
SPECIFICATION NO.
Last worked on:
File name:
Plot scale: 1:1

NORFOLK DISTRICT
CORPS OF ENGINEERS
NORFOLK, VIRGINIA

August 16, 2004

CITY OF NEW YORK
DEP
EAST OF HUDSON ADMINISTRATION BLDG.
TOWN OF MOUNT PLEASANT

BASEMENT PLAN

A-001
SHEET 2 OF 25

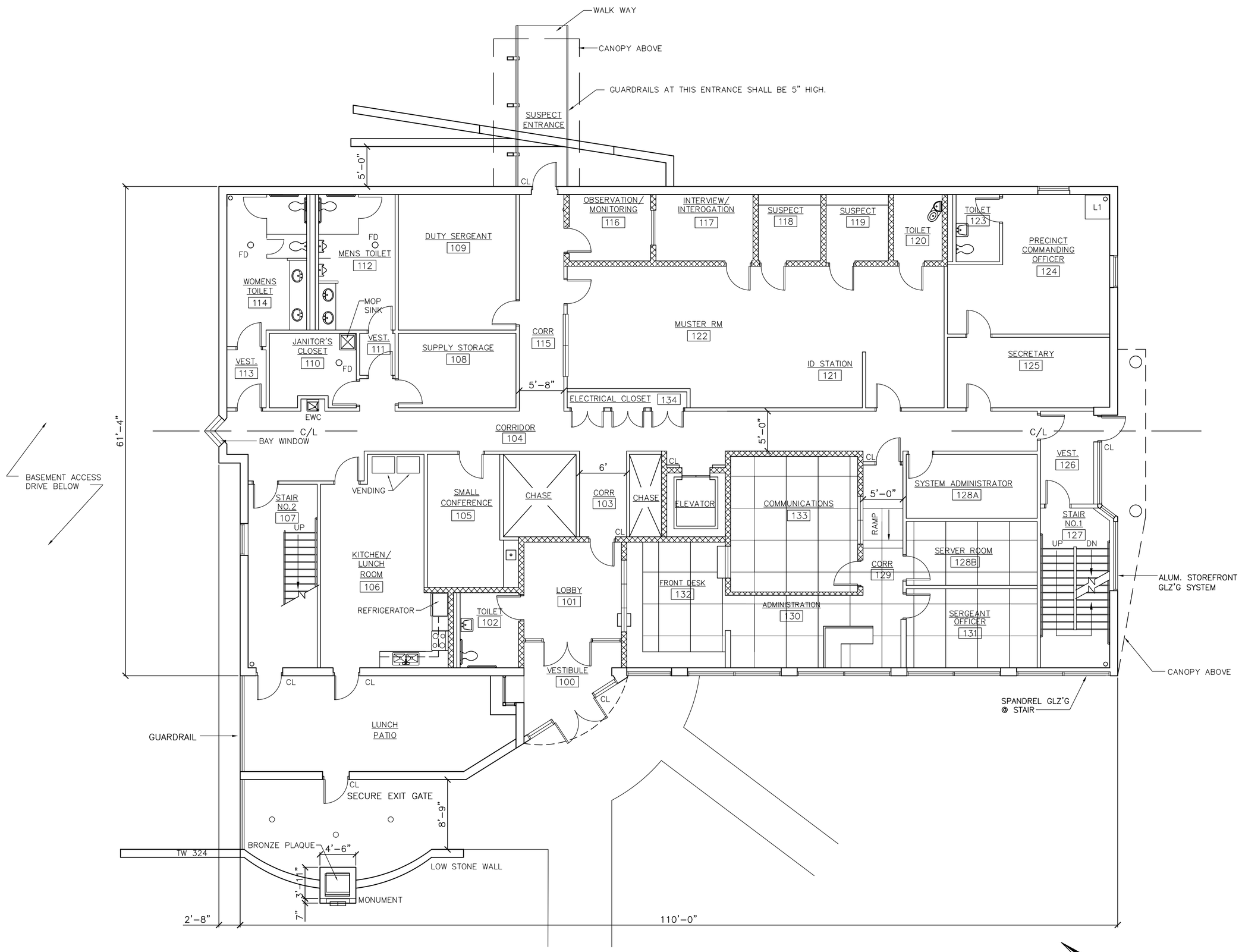

PROJECT NORTH

FIRST FLOOR PLAN

SCALE: 1/8"=1'-0"

GRAPHIC SCALES

1/8" = 1'-0" 0' 4' 8' 16' 24'

US Army Corps of Engineers
Norfolk District

NO.	DATE	DESCRIPTION	BY	APP.

DESIGNED: BCB
CHECKED: TLD
DATE: 16-AUG-04
DRAWN: KAB
SUBMITTED: TLD
SCALE: AS SHOWN
PROJECT NO. 0101HH
NORFOLK DISTRICT FILE NO. XXXXXXXX-
DRAWING NO. XXX-XX-XX
SPECIFICATION NO. -XX
Last worked on: August 16, 2004
File name:
Plot scale: 1:1

NORFOLK DISTRICT
CORPS OF ENGINEERS
NORFOLK, VIRGINIA

CITY OF NEW YORK
DEP
EAST OF HUDSON ADMINISTRATION BLDG.
TOWN OF MOUNT PLEASANT

FIRST FLOOR PLAN

A-002
SHEET 3 OF 25

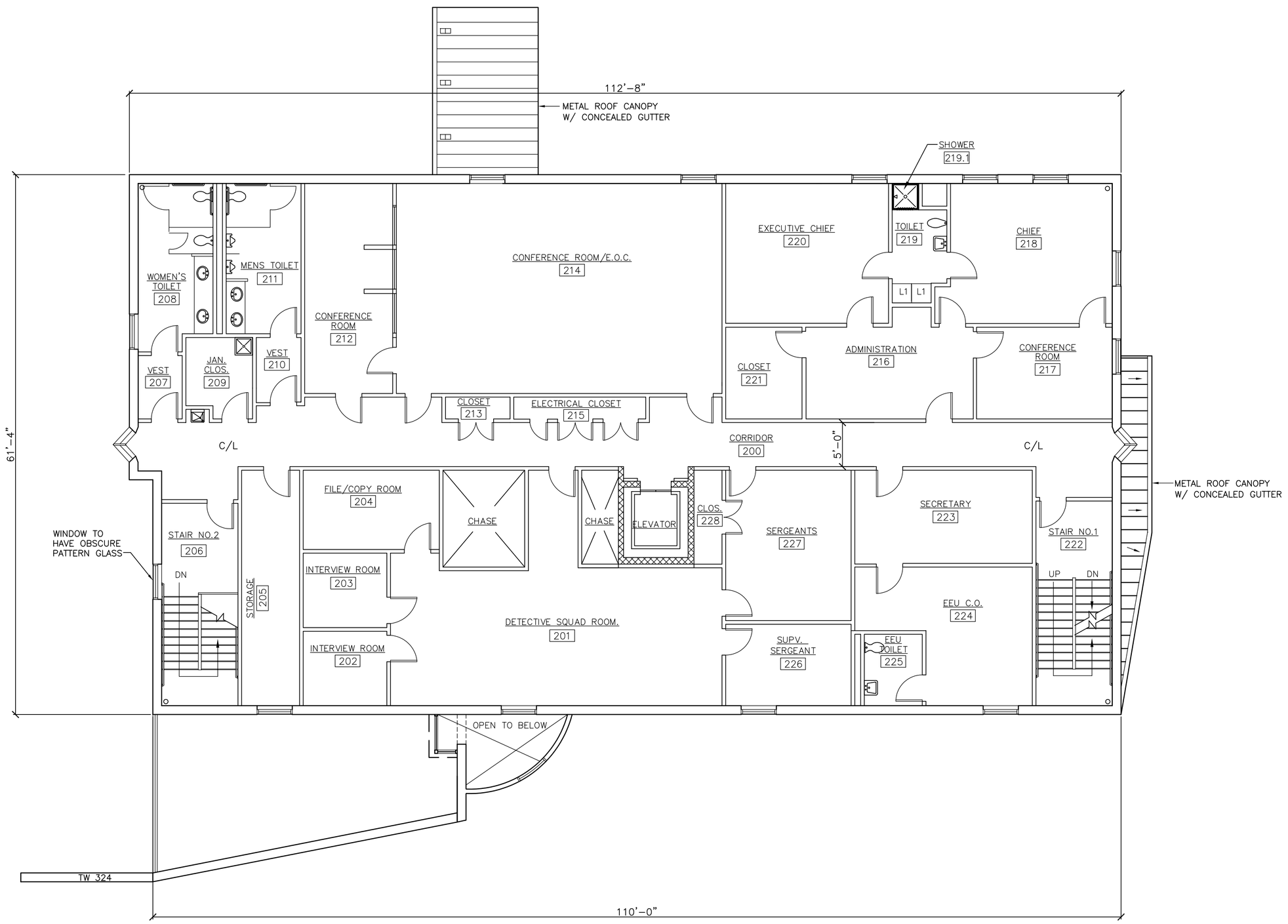

SECOND FLOOR PLAN

SCALE: 1/8"=1'-0"

PROJECT NORTH

TRUE NORTH

GRAPHIC SCALES

1/8" = 1'-0" 0' 4' 8' 16' 24'

US Army Corps of Engineers
Norfolk District

REV.	DATE	DESCRIPTION	BY	APP.

DESIGNED: BCB
DRAWN: KAB
CHECKED: TLD
SUBMITTED: TLD
DATE: 16-AUG-04
SCALE: AS SHOWN
PROJECT NO: 01HH
NORFOLK DISTRICT FILE NO. XXXXXXXX-
DRAWING NO: XX-XX-XX
SPECIFICATION NO.
Last worked on:
File name:
Plot scale: 1:1

NORFOLK DISTRICT
CORPS OF ENGINEERS
NORFOLK, VIRGINIA

August 16, 2004

CITY OF NEW YORK
DEP
EAST OF HUDSON ADMINISTRATION BLDG.
TOWN OF MOUNT PLEASANT

SECOND FLOOR PLAN

A-003
SHEET 4 OF 25

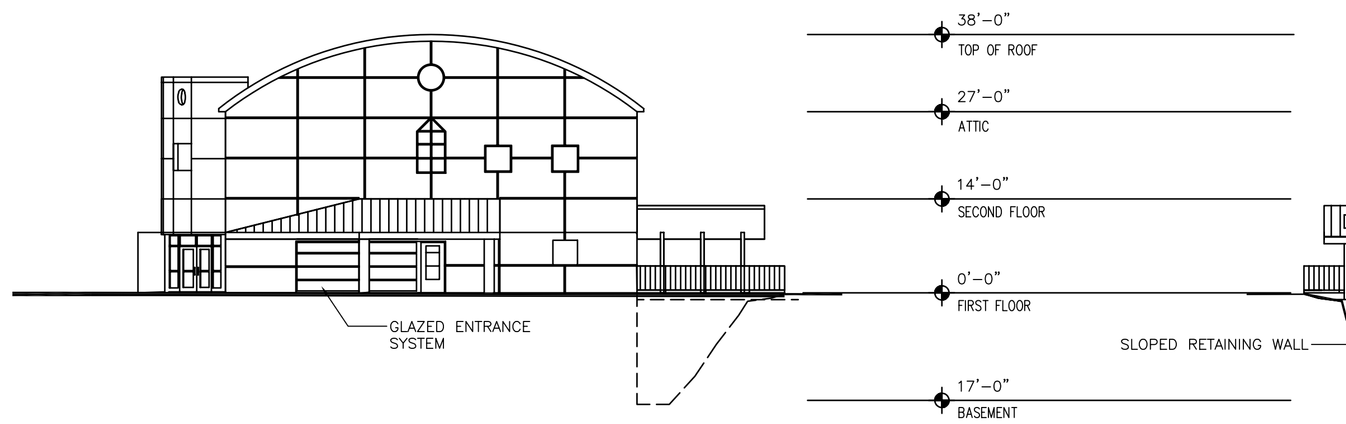

SIDE ELEVATION/ EXIT

SCALE: 1/16" = 1'-0"

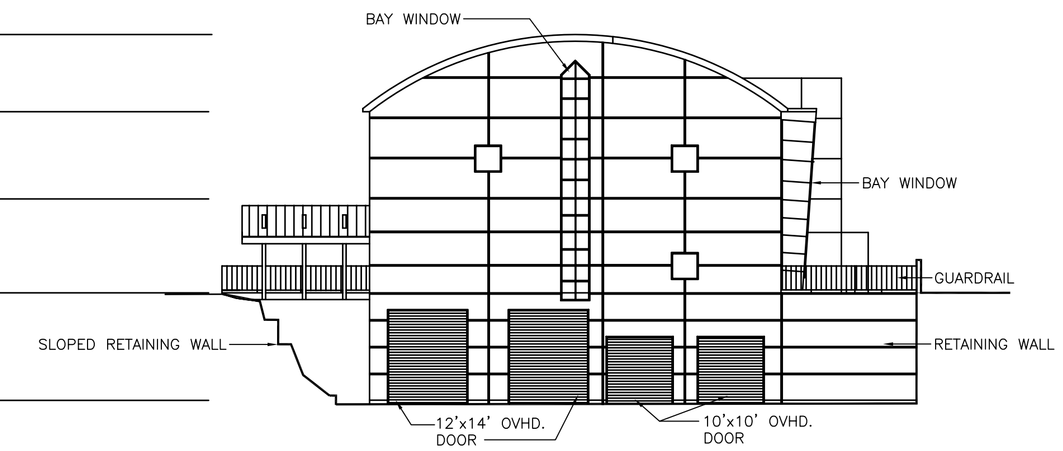

SIDE ELEVATION/ SERVICE AREA

SCALE: 1/16" = 1'-0"

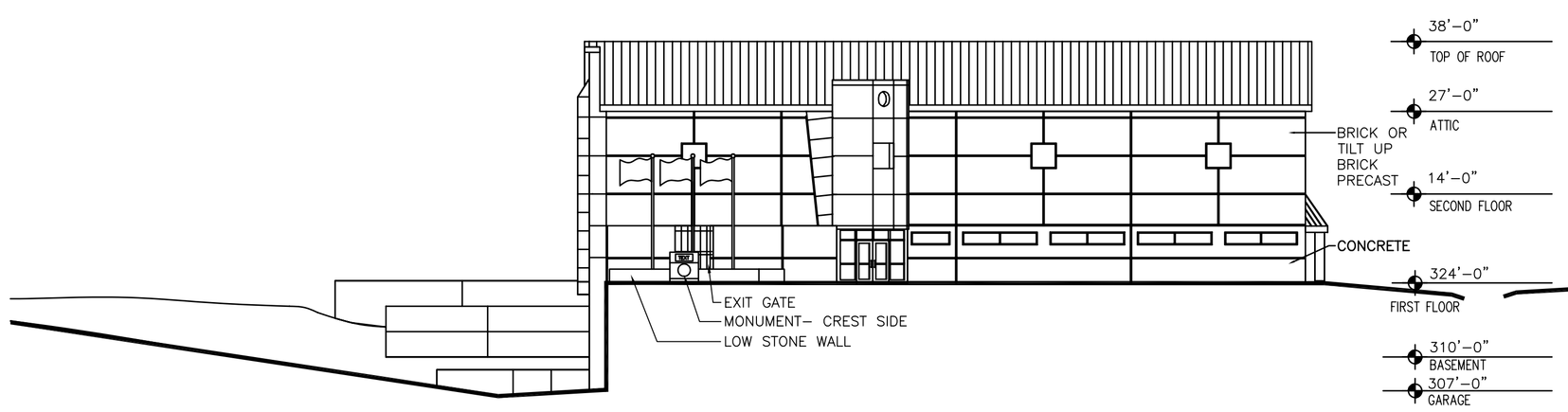

FRONT ELEVATION/ PUBLIC ENTRANCE

SCALE: 1/16" = 1'-0"

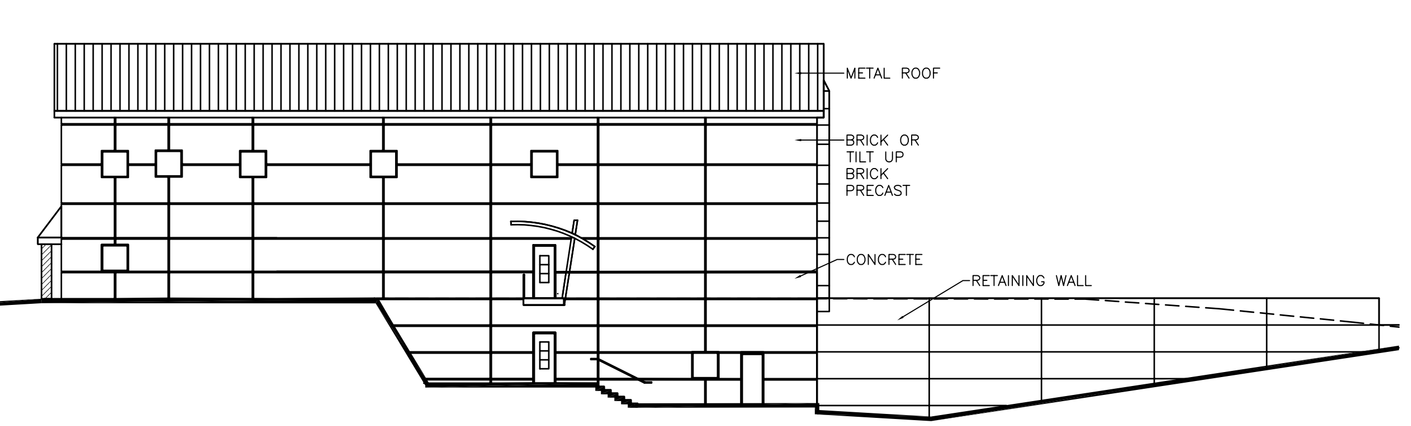

REAR ELEVATION/ SUSPECT ENTRANCE

SCALE: 1/16" = 1'-0"

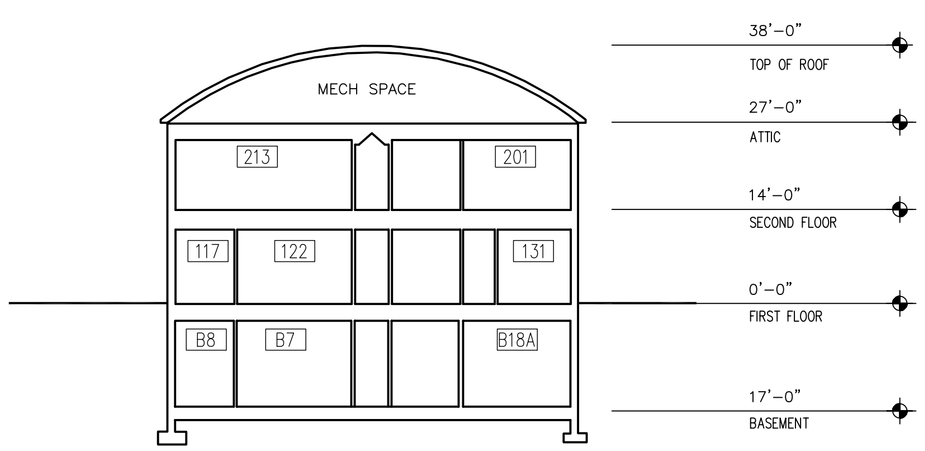

BUILDING SECTION

SCALE: 1/16" = 1'-0"

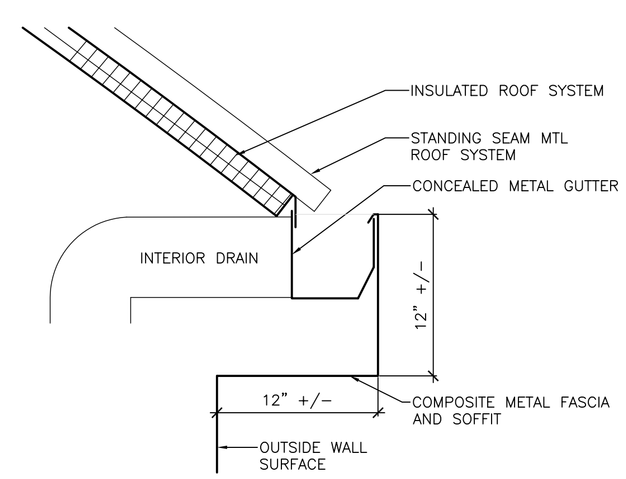

EAVE DETAIL

SCALE: 1 1/2" = 1'-0"

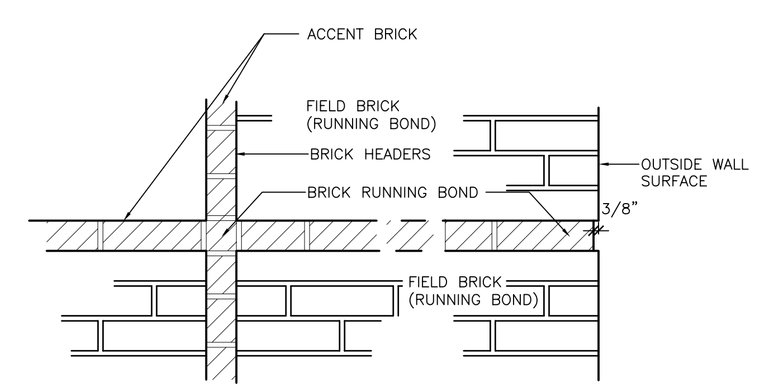

BRICK RECESS/FACADE TREATMENT DETAIL

NOTE: BRICK MAY BE TILT UP BRICK PRECAST

SCALE: 1 1/2" = 1'-0"

GRAPHIC SCALES

1/16" = 1'-0" 0' 8' 16' 32' 48'

1 1/2" = 1'-0" 0' 3" 6" 1' 2'

US Army Corps of Engineers
Norfolk District

NO.	DATE	DESCRIPTION	BY	APP.

DESIGNED: BCB
CHECKED: TLD
DATE: 16-AUG-04
DRAWN: KAB
SUBMITTED: TLD
SCALE: AS SHOWN
PROJECT NO. 01011HH
NORFOLK DISTRICT FILE NO. XXXXXXXX-
DRAWING NO. XXX-XX-XX
SPECIFICATION NO.
Last worked on:
File name:
Plot scale: 1:1

NORFOLK DISTRICT
CORPS OF ENGINEERS
NORFOLK, VIRGINIA

August 16, 2004

CITY OF NEW YORK
DEP
EAST OF HUDSON ADMINISTRATION BLDG.
TOWN OF MOUNT PLEASANT

ELEVATIONS AND SECTION

A-004

SHEET 5 OF 25

FURNITURE LEGEND:

ITEM NO	DESCRIPTION	ITEM NO	DESCRIPTION
B1	WD BENCH 36/12	FC3	FILE CABINET 3DRW, LOW WIDE
B2	WD BENCH	FC4	FILE CABINET 4DRW
BBG	BULLETIN BOARD W/LOCKING GLASS CLOSURE	FC5	FILE CABINET 5DRW, LOW WIDE
		FR	SMALL REFRIGERATOR
C1	OFFICE CHAIR	FS	FIRE ARMS SAFE
C2	STACKABLE CHAIR	FX	FAX MACHINE (NIC)
C3	BAR CHAIR	L1	LOCKER 24"x24"
C4	COUCH	L2	OPEN SHELF METAL LOCKER
CAB	STORAGE CABINET		
CL	CARD READER LOCK @ DOOR	MS	METAL SHELVES
CM	COMMUNICATIONS RACK (NIC)	MW	MAP WALL
CP	COPY MACHINE (NIC)	SB	BOOK SHELVES
CR	COAT RACK	T1	TABLE, 96/42
CT	COMMUNICATIONS TABLE	T2	TABLE, 72/36
CW1	CASE WORK COUNTER/TOP	T3	TABLE, 48/36
CW2	SYSTEMS FURNITURE WORK STATION	T4	TABLE, 36/24, BOLTED
D1	DESK 60x30	T5	TABLE, 72/24
DM1	DRY MARKER BOARD	TA	COFFEE TABLE
DM2	LG DRY MARKER BOARD	TB	TACKBOARD
ES	ELECTRONIC SCREEN W/CEILING MNTD PROJECTOR	TC	TABLE, CIRCULAR 42" DIA.
FC1	FILE CABINET 2DRW, UNDER DESK	TD	TABLE, DRAFTING
FC2	FILE CABINET 3DRW, UNDER DESK	TVFS	TV, FLAT SCREEN

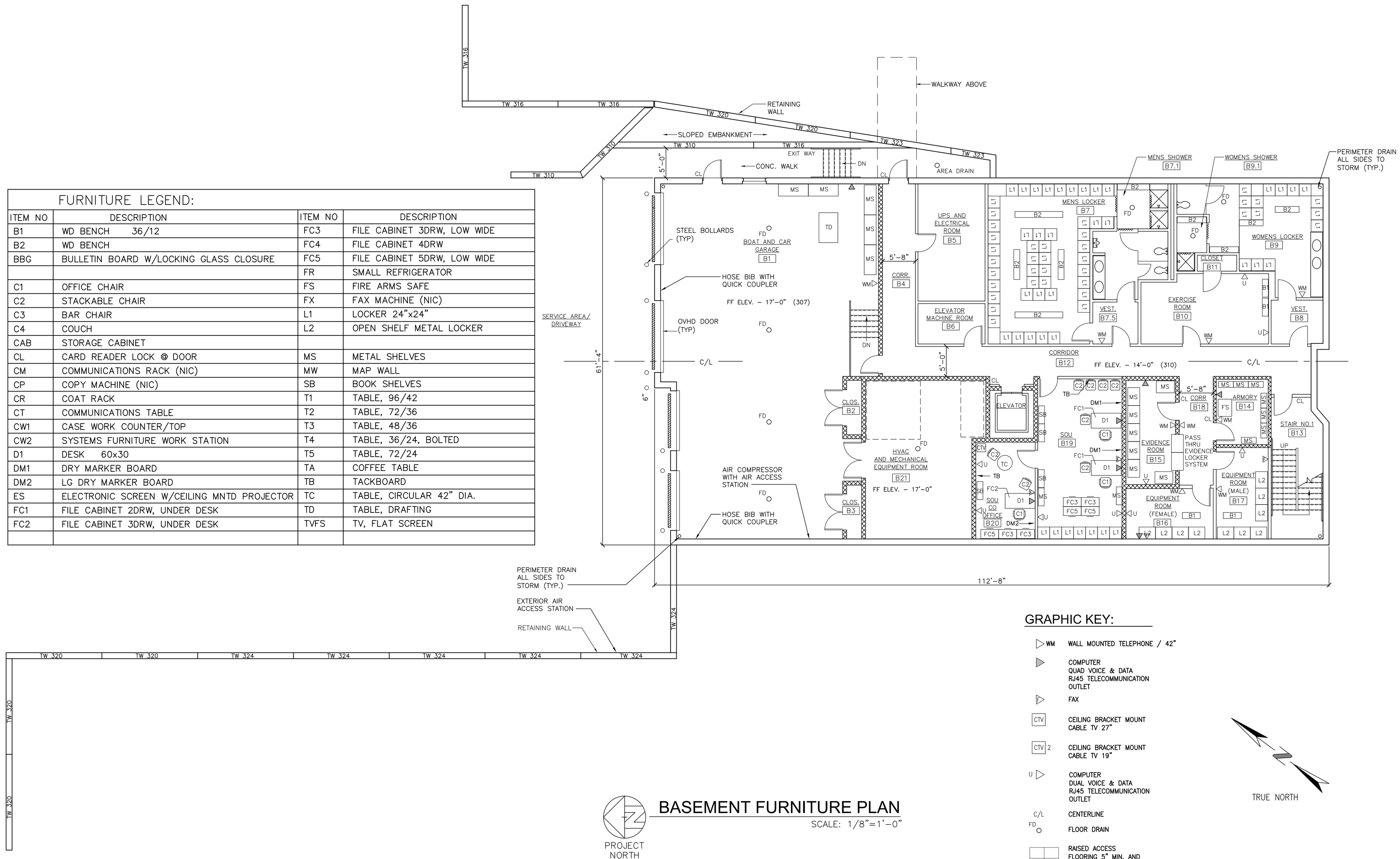

GRAPHIC KEY:

- WM — WALL MOUNTED TELEPHONE / 42"
- COMPUTER QUAD VOICE & DATA RJ45 TELECOMMUNICATION OUTLET
- FAX
- CTV — CEILING BRACKET MOUNT CABLE TV 27"
- CTV 2 — CEILING BRACKET MOUNT CABLE TV 19"
- U — COMPUTER DUAL VOICE & DATA RJ45 TELECOMMUNICATION OUTLET
- C/L — CENTERLINE
- FD — FLOOR DRAIN
- RAISED ACCESS FLOORING 5" MIN. AND 6" MAX. ABOVE FIRST FLOOR FINISHED FLOOR

TRUE NORTH

PROJECT NORTH

BASEMENT FURNITURE PLAN

SCALE: 1/8"=1'-0"

GRAPHIC SCALES

1/8" = 1'-0" 0' 4' 8' 16' 24'

US Army Corps of Engineers Norfolk District

NO.	DATE	DESCRIPTION	BY	APP.

DESIGNED: BCB DATE: 16-AUG-04
CHECKED: TLD SCALE: AS SHOWN
DRAWN: KAB SUBMITTED: TLD
PROJECT NO. 01011HH NORFOLK DISTRICT FILE NO. XXXXXXXX-
DRAWING NO. XX-XX-XX SPECIFICATION NO. -XX
Last worked on: Plot scale: 1:1
File name:

NORFOLK DISTRICT
CORPS OF ENGINEERS
NORFOLK, VIRGINIA

August 16, 2004

CITY OF NEW YORK
DEP
EAST OF HUDSON ADMINISTRATION BLDG.
TOWN OF MOUNT PLEASANT

BASEMENT FURNITURE PLAN

A-005
SHEET 6 OF 25

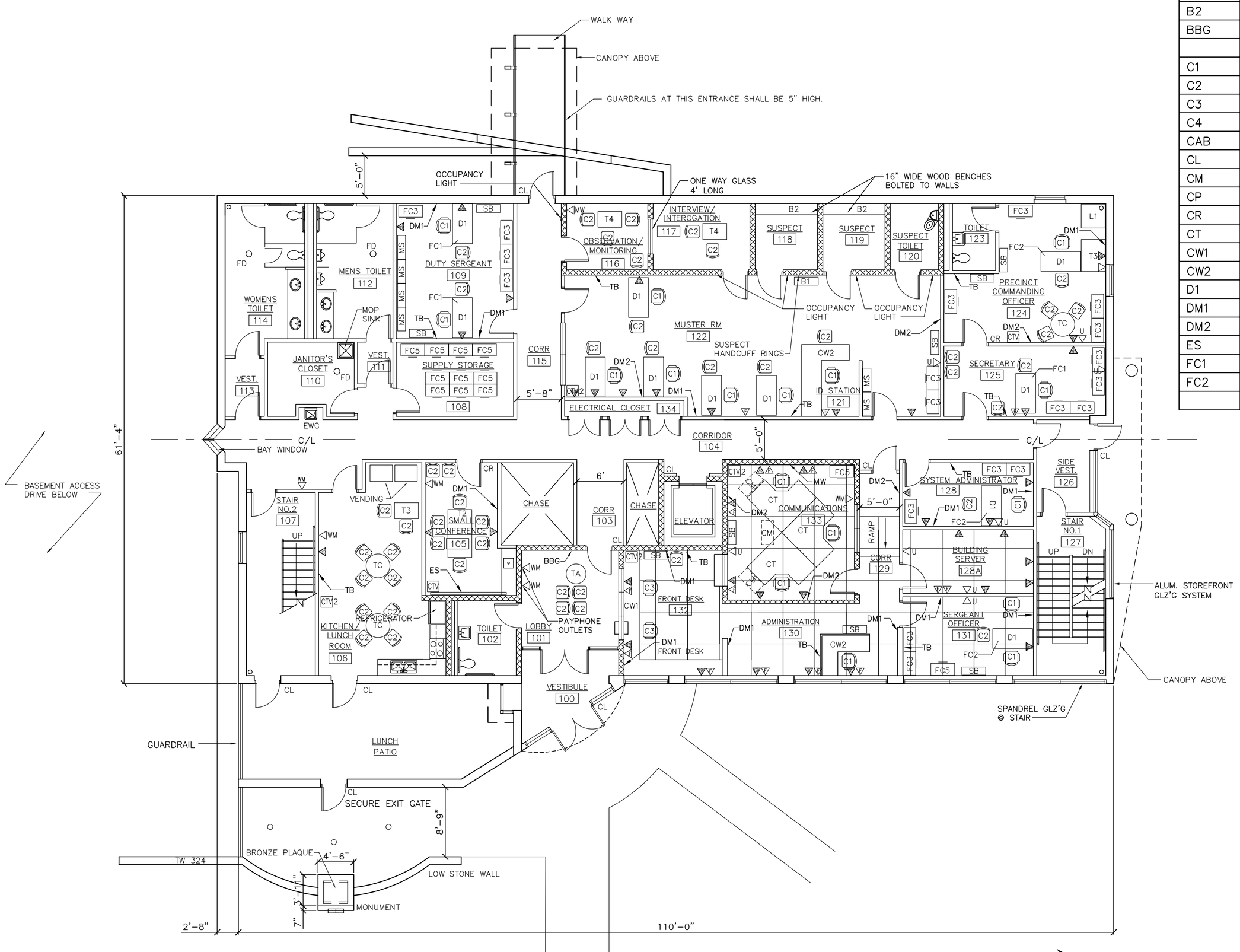

FIRST FLOOR FURNITURE PLAN

SCALE: 1/8"=1'-0"

FURNITURE LEGEND:

ITEM NO	DESCRIPTION	ITEM NO	DESCRIPTION
B1	WD BENCH 36/12	FC3	FILE CABINET 3DRW, LOW WIDE
B2	WD BENCH	FC4	FILE CABINET 4DRW
BBG	BULLETIN BOARD W/LOCKING GLASS CLOSURE	FC5	FILE CABINET 5DRW, LOW WIDE
		FR	SMALL REFRIGERATOR
C1	OFFICE CHAIR	FS	FIRE ARMS SAFE
C2	STACKABLE CHAIR	FX	FAX MACHINE (NIC)
C3	BAR CHAIR	L1	LOCKER 24"x24"
C4	COUCH	L2	OPEN SHELF METAL LOCKER
CAB	STORAGE CABINET		
CL	CARD READER LOCK @ DOOR	MS	METAL SHELVES
CM	COMMUNICATIONS RACK (NIC)	MW	MAP WALL
CP	COPY MACHINE (NIC)	SB	BOOK SHELVES
CR	COAT RACK	T1	TABLE, 96/42
CT	COMMUNICATIONS TABLE	T2	TABLE, 72/36
CW1	CASE WORK COUNTER/TOP	T3	TABLE, 48/36
CW2	SYSTEMS FURNITURE WORK STATION	T4	TABLE, 36/24, BOLTED
D1	DESK 60x30	T5	TABLE, 72/24
DM1	DRY MARKER BOARD	TA	COFFEE TABLE
DM2	LG DRY MARKER BOARD	TB	TACKBOARD
ES	ELECTRONIC SCREEN W/CEILING MNTD PROJECTOR	TC	TABLE, CIRCULAR 42" DIA.
FC1	FILE CABINET 2DRW, UNDER DESK	TD	TABLE, DRAFTING
FC2	FILE CABINET 3DRW, UNDER DESK	TVFS	TV, FLAT SCREEN

GRAPHIC KEY:

- WM — WALL MOUNTED TELEPHONE / 42"
- COMPUTER QUAD VOICE & DATA RJ45 TELECOMMUNICATION OUTLET
- FAX
- CTV — CEILING BRACKET MOUNT CABLE TV 27"
- CTV 2 — CEILING BRACKET MOUNT CABLE TV 19"
- U — COMPUTER DUAL VOICE & DATA RJ45 TELECOMMUNICATION OUTLET
- C/L — CENTERLINE
- FD — FLOOR DRAIN
- RAISED ACCESS FLOORING 5" MIN. AND 6" MAX. ABOVE FIRST FLOOR FINISHED FLOOR

GRAPHIC SCALES

1/8" = 1'-0" 0' 4' 8' 16' 24'

US Army Corps of Engineers
Norfolk District

NO.	DATE	DESCRIPTION	BY	APP.

DESIGNED: BCB
DRAWN: KAB
CHECKED: TLD
SUBMITTED: TLD
DATE: 16-AUG-04
SCALE: AS SHOWN
PROJECT NO. 01011HH
DRAWING NO. XXX-XX-XX
NORFOLK DISTRICT FILE NO. XXXXXXX-
SPECIFICATION NO. -XX
Last worked on:
File name:
Plot scale: 1:1

NORFOLK DISTRICT
CORPS OF ENGINEERS
NORFOLK, VIRGINIA

August 16, 2004

CITY OF NEW YORK
DEP
EAST OF HUDSON ADMINISTRATION BLDG.
TOWN OF MOUNT PLEASANT

FIRST FLOOR FURNITURE PLAN

A-006
SHEET 7 OF 25

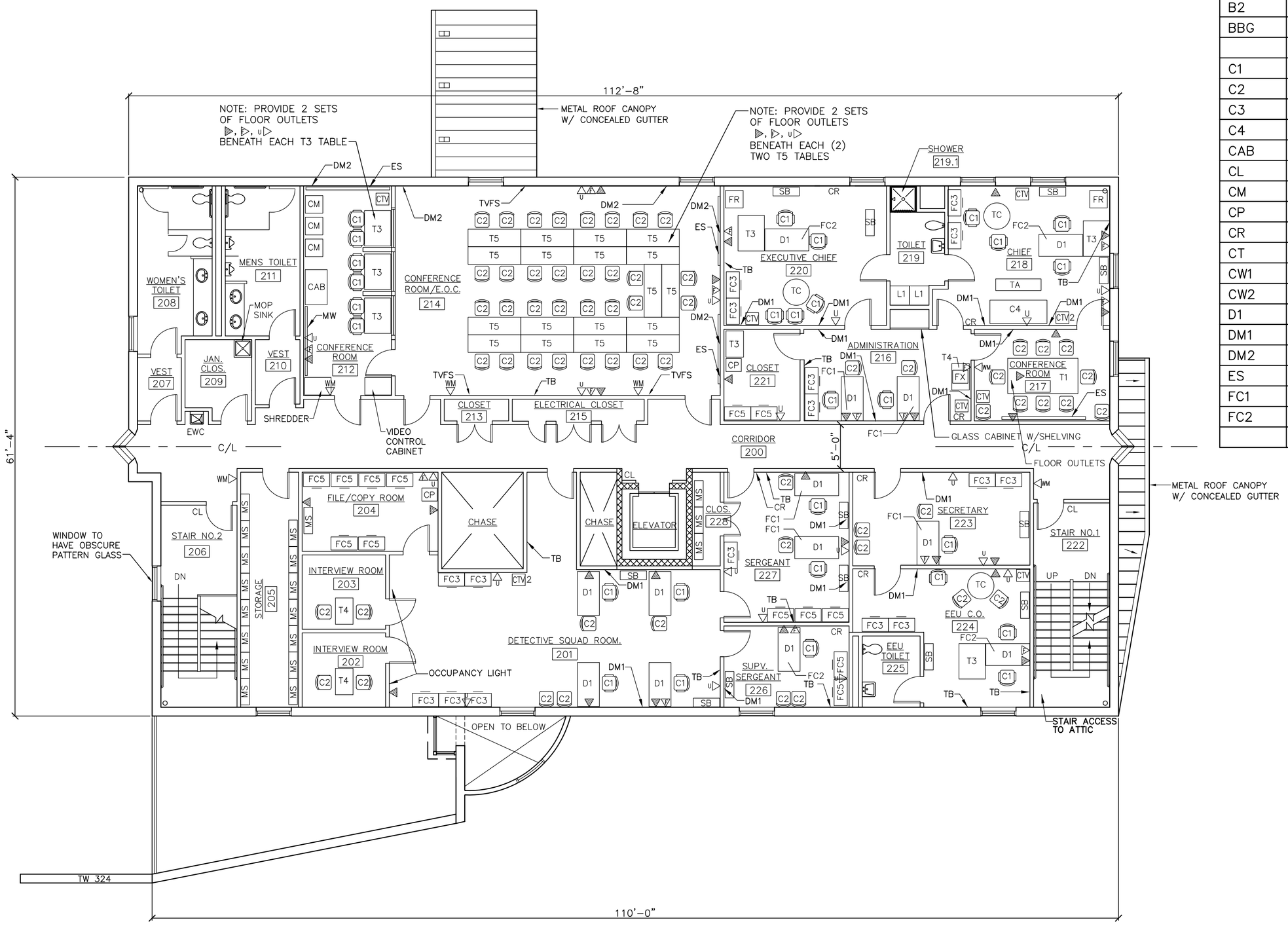

SECOND FLOOR FURNITURE PLAN

SCALE: 1/8"=1'-0"

PROJECT NORTH

TRUE NORTH

FURNITURE LEGEND:

ITEM NO	DESCRIPTION	ITEM NO	DESCRIPTION
B1	WD BENCH 36/12	FC3	FILE CABINET 3DRW, LOW WIDE
B2	WD BENCH	FC4	FILE CABINET 4DRW
BBG	BULLETIN BOARD W/LOCKING GLASS CLOSURE	FC5	FILE CABINET 5DRW, LOW WIDE
		FR	SMALL REFRIGERATOR
C1	OFFICE CHAIR	FS	FIRE ARMS SAFE
C2	STACKABLE CHAIR	FX	FAX MACHINE (NIC)
C3	BAR CHAIR	L1	LOCKER 24"x24"
C4	COUCH	L2	OPEN SHELF METAL LOCKER
CAB	STORAGE CABINET		
CL	CARD READER LOCK @ DOOR	MS	METAL SHELVES
CM	COMMUNICATIONS RACK (NIC)	MW	MAP WALL
CP	COPY MACHINE (NIC)	SB	BOOK SHELVES
CR	COAT RACK	T1	TABLE, 96/42
CT	COMMUNICATIONS TABLE	T2	TABLE, 72/36
CW1	CASE WORK COUNTER/TOP	T3	TABLE, 48/36
CW2	SYSTEMS FURNITURE WORK STATION	T4	TABLE, 36/24, BOLTED
D1	DESK 60x30	T5	TABLE, 72/24
DM1	DRY MARKER BOARD	TA	COFFEE TABLE
DM2	LG DRY MARKER BOARD	TB	TACKBOARD
ES	ELECTRONIC SCREEN W/CEILING MNTD PROJECTOR	TC	TABLE, CIRCULAR 42" DIA.
FC1	FILE CABINET 2DRW, UNDER DESK	TD	TABLE, DRAFTING
FC2	FILE CABINET 3DRW, UNDER DESK	TVFS	TV, FLAT SCREEN

NOTE: SHREDDER AND VIDEO CONTROL CABINET (NIC)

GRAPHIC KEY:

- WM — WALL MOUNTED TELEPHONE / 42"
- COMPUTER QUAD VOICE & DATA RJ45 TELECOMMUNICATION OUTLET
- FAX
- CTV — CEILING BRACKET MOUNT CABLE TV 27"
- CTV 2 — CEILING BRACKET MOUNT CABLE TV 19"
- U — COMPUTER DUAL VOICE & DATA RJ45 TELECOMMUNICATION OUTLET
- C/L — CENTERLINE
- FD — FLOOR DRAIN
- RAISED ACCESS FLOORING 5" MIN. AND 6" MAX. ABOVE FIRST FLOOR FINISHED FLOOR

GRAPHIC SCALES

1/8" = 1'-0" 0' 4' 8' 16' 24'

US Army Corps of Engineers Norfolk District

NO.	DATE	DESCRIPTION	BY	APP

DESIGNED: BCB
DRAWN: KAB
CHECKED: TLD
SUBMITTED: TLD
DATE: 16-AUG-04
SCALE: AS SHOWN
PROJECT NO. 01010HH
NORFOLK DISTRICT FILE NO. XXXXXXXX-
DRAWING NO. XXX-XX-XX
SPECIFICATION NO.
Last worked on:
File name:
Plot scale: 1:1

NORFOLK DISTRICT
CORPS OF ENGINEERS
NORFOLK, VIRGINIA

August 16, 2004

CITY OF NEW YORK
DEP
EAST OF HUDSON ADMINISTRATION BLDG.
TOWN OF MOUNT PLEASANT

SECOND FLOOR FURNITURE PLAN

A-007
SHEET 8 OF 25

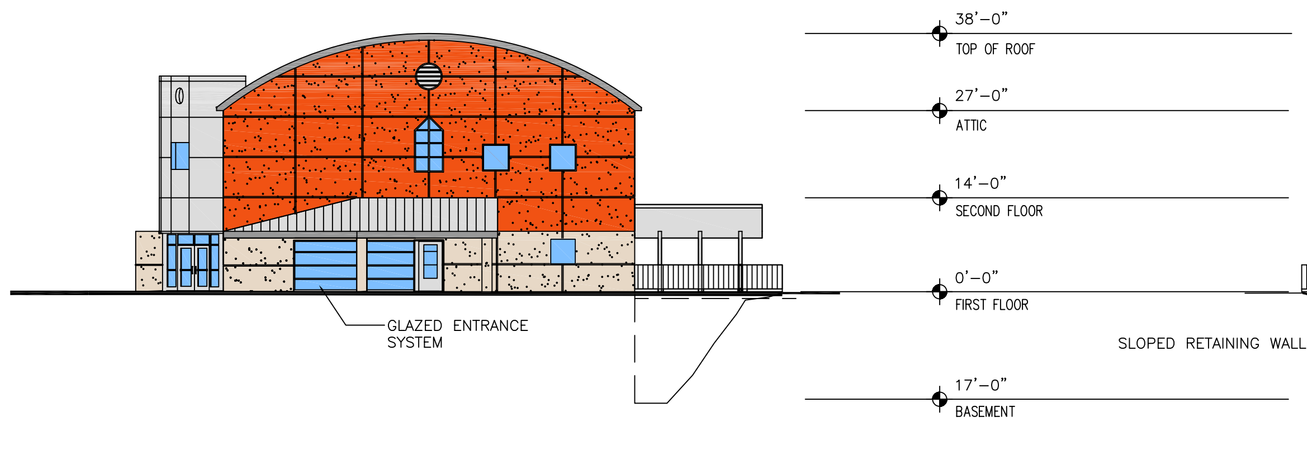

SIDE ELEVATION/ EXIT

SCALE: 1/16" = 1'-0"

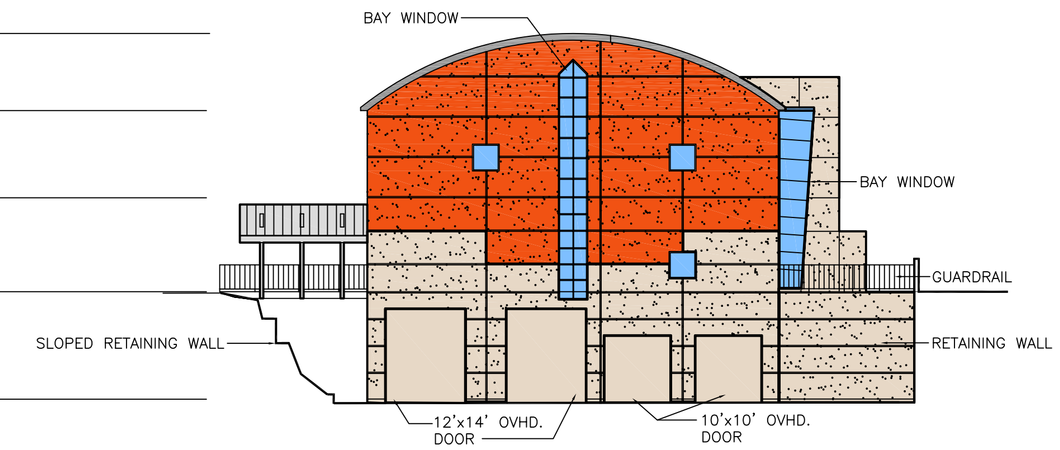

SIDE ELEVATION/ SERVICE AREA

SCALE: 1/16" = 1'-0"

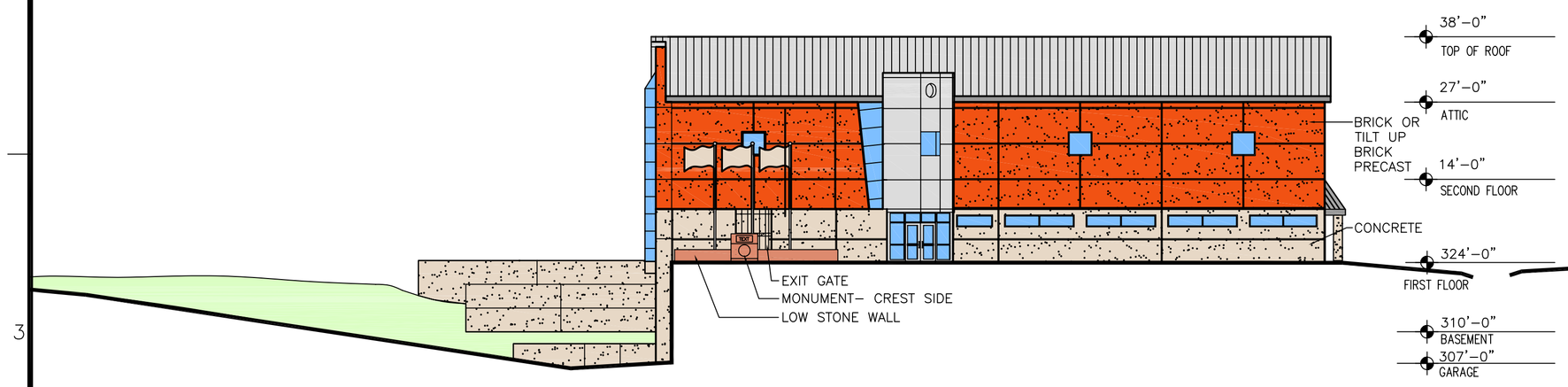

FRONT ELEVATION/ PUBLIC ENTRANCE

SCALE: 1/16" = 1'-0"

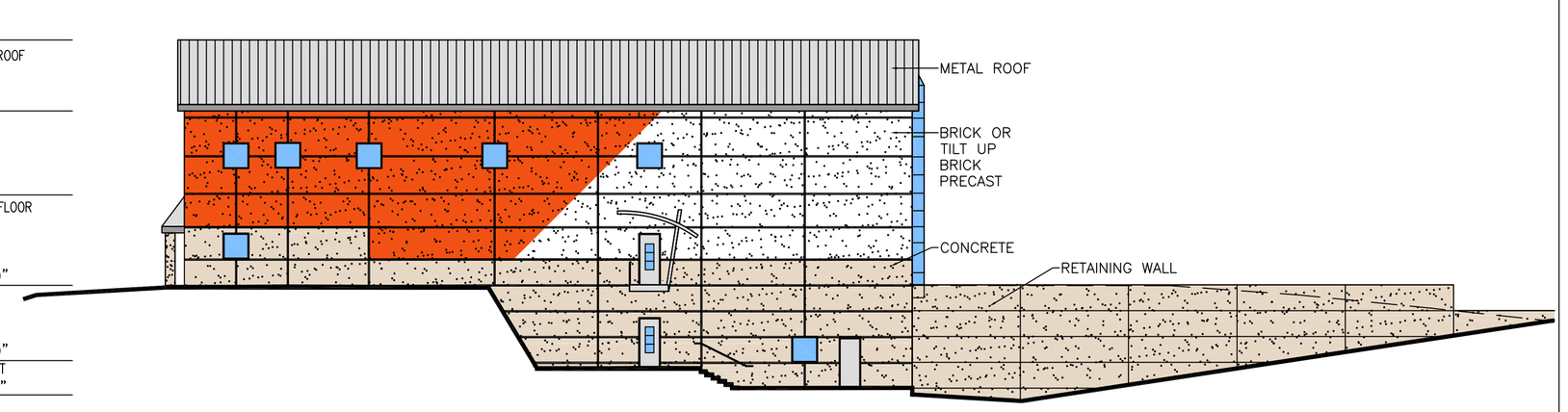

REAR ELEVATION/ SUSPECT ENTRANCE

SCALE: 1/16" = 1'-0"

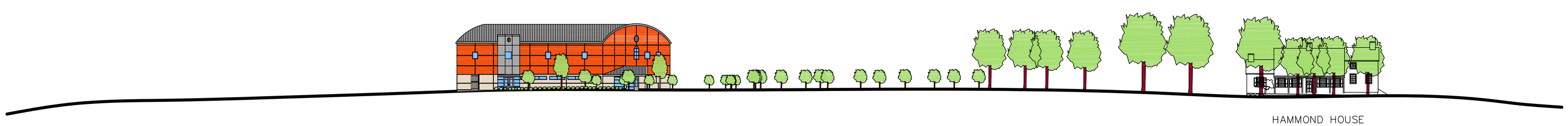

GRASSLANDS ROAD ELEVATION

SCALE: 1/32" = 1'-0"

US Army Corps of Engineers
Norfolk District

REV.	DATE	DESCRIPTION	BY	APP.

DESIGNED:
CHECKED:
DRAWN:
SUBMITTED:
DATE: 16-AUG-04
SCALE: AS SHOWN
PROJECT NO. 0101HH
NORFOLK DISTRICT FILE NO. XXXXXXXX-
DRAWING NO. XXX-XX-XX
SPECIFICATION NO.
Last worked on:
For name:
Plot scale: 1:1

NORFOLK DISTRICT
CORPS OF ENGINEERS
NORFOLK, VIRGINIA

August 16, 2004

CITY OF NEW YORK
DEP
EAST OF HUDSON ADMINISTRATION BLDG.
TOWN OF MOUNT PLEASANT

ELEVATIONS

A-008
SHEET 9 OF 25

ZONING COMPARISON TABLE
PROPOSED NYC DEP POLICE PRECINCT
EAST OF HUDSON

ITEM	ZONING REQUIREMENT	PROPOSED
1. BUILDING ZONE DISTRICT:	OB-2	OB-2
2. PERMITTED USE	Police Station for other municipal use	Police Station for other municipal use
3. LOT SIZE		
Area:	Min. 20 acres	87 ∀ acres
Width at Front Yard Setback	Min. 400 ft.	487.5∀ ft. For specific area/ ∀1,990 total
Mean Width:	Min. 400 ft.	487.5∀ ft. for specific area/ ∀1,990 total
Mean Depth:	Min. 400 ft.	1,787∀ ft.
4. MINIMUM YARD DIMENSIONS		
Front Setbacks:	150 ft.	260∀ ft.
Side Setback:	100 ft. (200 total)	E. Side >150∀ ft. W. Side 370∀ ft.
Rear Setback:	100 ft.	>100 ft.
5. FLOOR AREA OF BUILDING:		
Total Floor Area*		20,500 ∀ sf.
Building Coverage (s.f.):		6,800∀ s.f.
Maximum Building Coverage* (% of lot):	10%	0.18%
6. MAXIMUM HEIGHT OF BUILDING:		
Stories:	2	2 above & 1sublevel
Feet:	40 ft.	38ft.
7. NO. OF OFF-STREET LOADING SPACES:	None, unless determined by Board of Appeals that there is a need.	1 proposed
8. OFF-STREET PARKING:		
	1 s.f. of parking space per s.f. of office 1 space per employee on duty at peak employment 1 space for each company vehicle	14,000 s.f. office @ 350 s.f./space = 40 Peak employee parking = 30 Company vehicles = 12 Total REQUIRED 82
Parking Area (sf.)	350 sf. per space	350 sf. per space

* Calculation provided (The DEP does have other projects which are being considered for the site. At this time, no final decision can be made in regards to these potential projects).

6,800 ft Building Coverage:	113.3ft x 60 ft = 6,800∀ sf.
Total Floor Area:	6,800∀ sf. x 3 levels = 20,514∀ sf. (∀14,000 s.f. office space/6,500 s.f. basement)
Maximum Lot Coverage (% of lot):	87 acres = 3,789,720 sf.

SITE DATA

SITE AREA:		±86.07 AC
DISTURBED AREA:		±4.2 AC
ZONING:		OBT–2
PROPOSED USE:		ADMINISTRATION BUILDING
REQUIRED PARKING:		
(14,000 S.F. X 350 S.F. PER CAR)		40
(PEAK EMPLOYEE PARKING)		30
(COMPANY VEHICLES)		12
SECURE PARKING PROVIDED:	SPACES	58
	HC SPACES	2
	TOTAL	60
VISITOR PARKING PROVIDED:	SPACES	24
	HC SPACES	2
	TOTAL	26
TOTAL PARKING PROVIDED:		86

CIVIL LEGEND

EXISTING		NEW
	MANHOLE	
	SANITARY CLEANOUT	
	VALVE	
	WATER METER	
	FIRE HYDRANT	
	WELL	
	DROP INLET	
	CURB INLET	
	GAS METER	
	POWER POLE	
	LIGHT POLE	
	LIGHT POLE /CONCRETE BASE	
	PEDESTAL	
	CURB AND GUTTER	
x x	FENCE	x x
	PROPERTY LINE	
	BUILDINGS	
SY	STORM SEWER	
SS	SANITARY SEWER	SS
W	WATER	W
E	ELECTRIC & TELEPHONE LINE	
	TRAFFIC BOX	
	SIGN	
	TREE	
	BUSH	
	PAVEMENT	
CONC	CONCRETE	
	TEMPORARY BENCHMARK (TBM)	
10.00	ELEVATIONS	10.0
TC 10.50 / 10.00	TOP OF CURB ELEVATIONS	TC 10.50 / 10.00
	TOP OF WALK ELEVATIONS	TW 10.50 / 10.00
	SILT FENCE	XX XX
	UNLESS NOTED OTHERWISE	UNO
	LIMITS OF CONSTRUCTION	

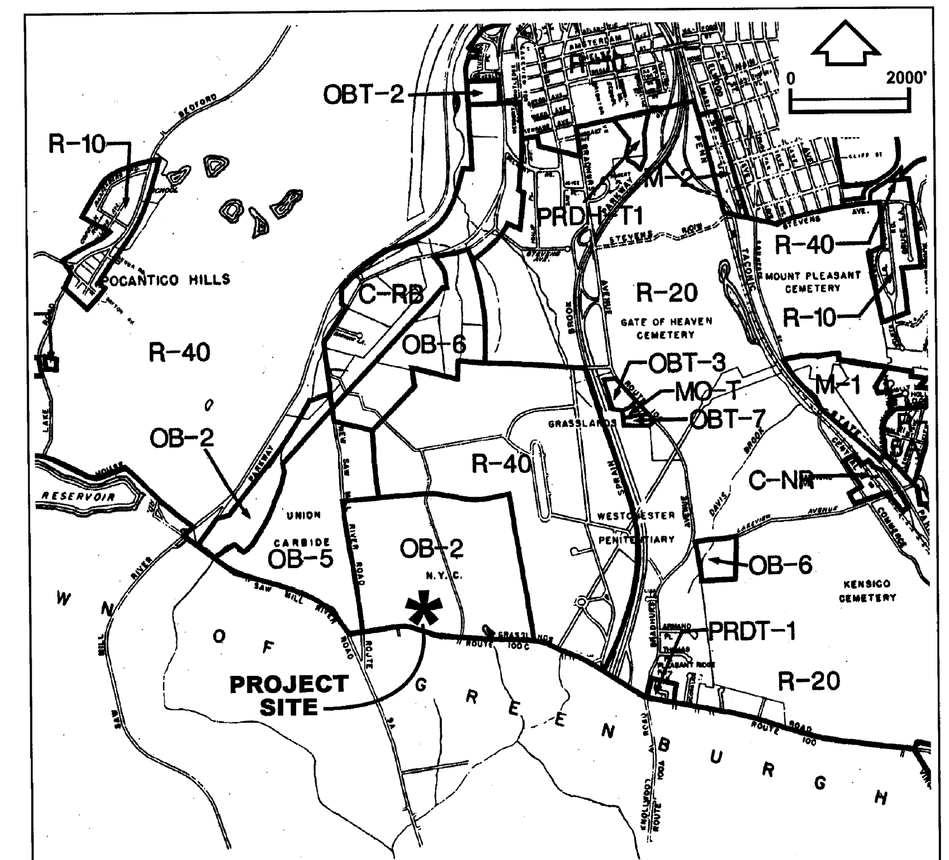

R-40	One Family Residential
R-20	One Family Residential
R-10	One Family Residential
R-5A	Multi-Family Residential
OBT-2	Public Utility Office
OBT-3	Research Office
OBT-5	Office Business
OBT-6	Office Building, Distribution, Limited Fabrication
OBT-7	Office Building Transitional
PRDT-1	Planned Residential Development Transitional
PRDH-T1	Planned Residential - Historic Development Transitional
C-NR	Neighborhood Retail
MO-T	Medical Office Transitional
M-1	Planned Light Industry
M-2	Light Industry

BASE MAP SOURCE: Town of Mt. Pleasant Zoning Map

PROJECT SITE AND SURROUNDING ZONING

NYC DEP
EAST HUDSON POLICE PRECINCT
Town of Mount Pleasant, NY

Saccardi & Schiff, Inc. - Planning & Development Consultants

US Army Corps of Engineers
Norfolk District

REV.	DATE	DESCRIPTION	BY	APP.

DESIGNED: JS
CHECKED: DMW
DRAWN: JS
SUBMITTED: DMW
DATE: 16-AUGUST-04
SCALE: NTS
PROJECT NO. 031120
NORFOLK DISTRICT FILE NO.
DRAWING NO.
SPECIFICATION NO.
Last worked on:
Plot scale: 1:1
File name:

NORFOLK DISTRICT
CORPS OF ENGINEERS
NORFOLK, VIRGINIA

CITY OF NEW YORK
DEPT. OF ENVIRONMENTAL PROTECTION
EAST OF HUDSON ADMINISTRATION BLDG.
TOWN OF MOUNT PLEASANT

DATA SHEET

D–001
SHEET OF

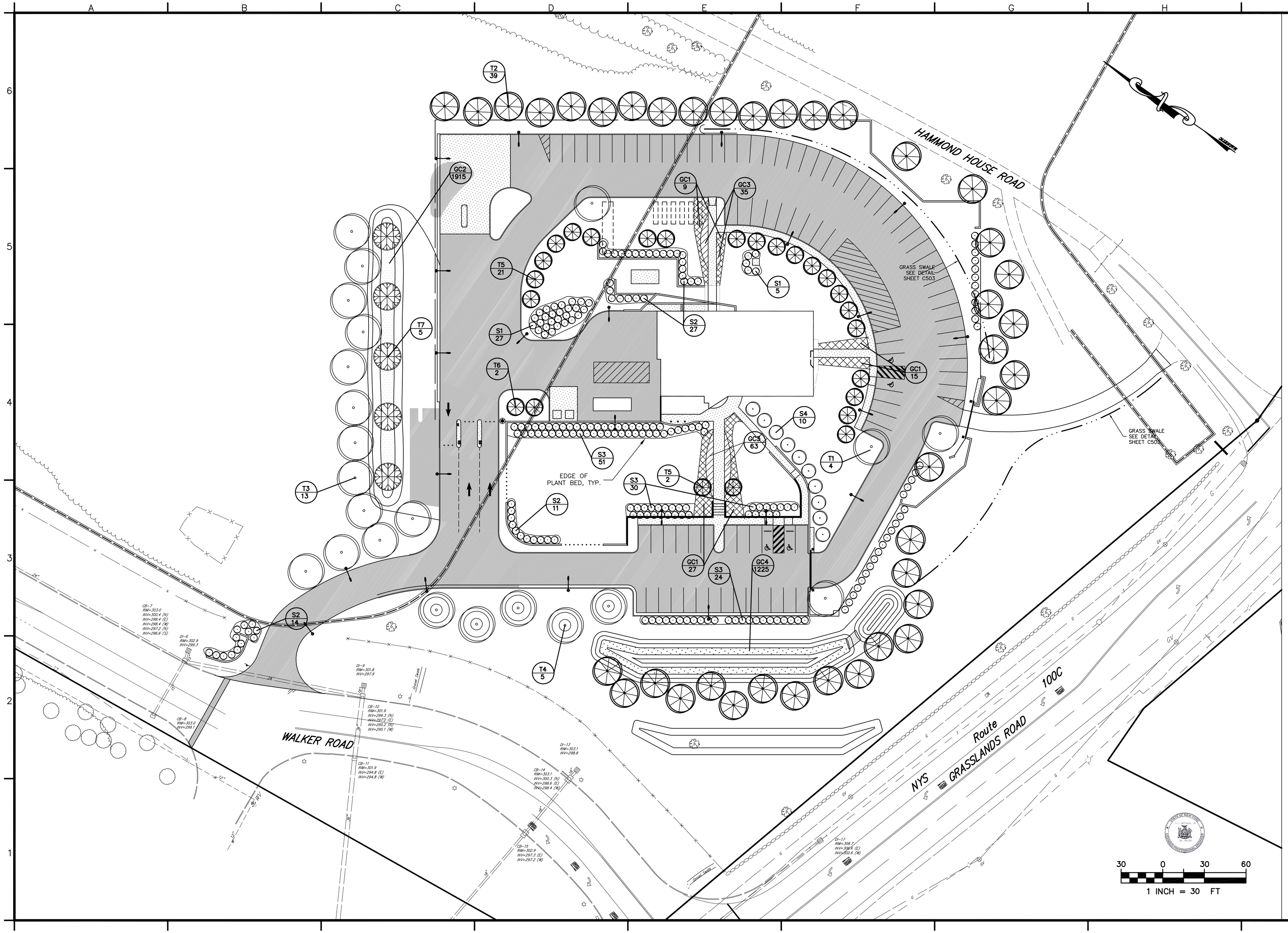

US Army Corps of Engineers
Norfolk District

REV.	DATE	DESCRIPTION	BY	APP.

DESIGNED: JS
CHECKED: DMW
DRAWN: JS
SUBMITTED: DMW
DATE: 16-AUGUST-04
SCALE: 1"=30'
PROJECT NO. 031120
NORFOLK DISTRICT FILE NO.
DRAWING NO.
SPECIFICATION NO.
Last worked on:
File name:
Plot scale: 1:1

NORFOLK DISTRICT
CORPS OF ENGINEERS
NORFOLK, VIRGINIA

CITY OF NEW YORK
DEPT. OF ENVIRONMENTAL PROTECTION
EAST OF HUDSON ADMINISTRATION BLDG.
TOWN OF MOUNT PLEASANT

LANDSCAPE PLAN

L-100
SHEET OF

PLANT LIST

KEY	SCIENTIFIC NAME	COMMON NAME	SIZE CALIPER	SIZE HEIGHT	SIZE SPREAD	PLANT METHOD	QUANTITY	REMARKS
TREES								
T1	Acer saccharum 'Green Mountain'	Green Mountain Sugar Maple	3"-3 1/2"	–	–	#1, B&B	4	–
T2	Juniperus virginiana	Eastern Red Cedar	3"=3 1/2"	10'-12'	–	#2, B&B	39	–
T3	Plantanus occidentalis	American Sycamore	3"-3 1/2"	–	–	#1, B&B	15	–
T4	Fraxinus americana	White Ash	3"-3 1/2"	–	–	#1, B&B	5	Tree Form, Specimen Quality
T5	Cornus florida	Flowering Dogwood	3"-3 1/2"	–	–	#1, B&B	23	Tree Form, Specimen Quality
T6	Kalmia latifolia	Mountain Laurel	3"-3 1/2"	–	–	#1, B&B	2	Tree Form, Specimen Quality
–	–	–	–	–	–	–	–	–
SHRUBS								
S1	Amelanchier canadensis	Service Berry	–	15"-18"	–	#3, Cont.	32	–
S2	Lindera benzoin	Spicebush	–	18"-24"	–	#3, Cont.	91	Specimen Quality
S3	Rhododendron peridymenoides	Pinxterbloom Azalea	–	18"-24"	–	#3, Cont.	129	Specimen Quality
S4	Viburnum dentatum	Arrowhead Viburnum	–	18"-24"	–	#3, Cont.	10	Specimen Quality
–	–	–	–	–	–	–	–	–
GROUNDCOVERS & PERENNIALS								
GC1	Polystichum acrostichoides	Christmas Fern	–	–	–	1gal. Cont.	–	Space 12" O.C.
GC2	Typha Latifolia	Broadleaf Cattail	–	–	–	Seed	3985 SF	4oz. per Acre
GC3	Rudbeckia hirta	Black-eyed Susan	–	–	–	1 gal- Cont.	–	Space 12" O.C.
GC4	Panicum virgatum	Switch Grass	–	–	–	Seed	3031 SF	2lbs. per Acre
–	–	–	–	–	–	–	–	–

NOTE: VERIFICATION OF TOTAL QUANTITIES AS SHOWN IN THE "PLANT LIST" SHALL BE THE RESPONSIBILITY OF THE LANDSCAPE CONTRACTOR, AND THE KEYED PLAN SHALL GOVERN.

"MISS UTILITY"

1. THIS PLAN DOES NOT GUARANTEE THE EXISTENCE OR NON-EXISTENCE OF ANY UTILITIES. PRIOR TO ANY CONSTRUCTION, EXCAVATION, OR LANDSCAPING, THE CONTRACTOR SHALL ASSUME THE RESPOSIBILITY OF LOCATING AND VERIFYING ALL UTILITIES, ABOVE AND/OR BELOW GROUND, PUBLIC AND/OR PRIVATE THAT MAY EXIST AND CROSS THROUGH THE AREA OF CONSTRUCTION THAT ARE OR ARE NOT SHOWN ON THESE PLANS.
2. THE CONTRACTOR IS REQUIRED TO CALL "MISS UTILITY" AND HAVE UTILITES LOCATED BEFORE UNDERTAKING ANY EXCAVATION. THIS ACTION DOES NOT RELIEVE THE CONTRACTOR OF INDEPENDENT VERIFICATION BY HIS OWN FORCES. THE CONTRACTOR SHALL BE RESPONSIBLE FOR REPAIRING AT HIS EXPENSE ANY UTILITIES DAMAGED DURING CONSTRUCTION.

NOTES:

1. VERIFICATION OF TOTAL QUANTITIES AS SHOWN IN THE "PLANT LIST" SHALL BE THE RESPONSIBILITY OF THE LANDSCAPE CONTRACTOR, AND THE KEYED PLAN SHALL GOVERN.
2. ALL PLANTS MUST BE HEALTHY, VIGOROUS MATERIAL, FREE OF PESTS AND DISEASE AND PEST OR DISEASE DAMAGE.
3. ALL PLANTS MUST BE CONTAINER-GROWN (CONT.) OR BALLED AND BURLAPPED (B&B) AS INDICATED ON THE PLANT LIST.
4. ALL TREES MUST BE STRAIGHT-TRUNKED, FULL-HEADED AND MEET ALL REQUIREMENTS SPECIFIED. ALL LARGE SHADE TREE SPECIES TO HAVE A MINIMUM 6 FOOT LATERAL BRANCH HEIGHT.
5. ALL PLANTING OPERATIONS SHALL BE PERFORMED AS PER DETAILS AND SPECIFICATIONS.
6. ALL PLANTS ARE SUBJECT TO THE APPROVAL OF THE LANDSCAPE ARCHITECT AND THE OWNER BEFORE, DURING AND AFTER INSTALLATION.
7. ALL PLANTS AND PLANTING AREAS MUST BE COMPLETELY MULCHED WITH 4" SHREDDED HARDWOOD MULCH.
8. PRIOR TO CONSTRUCTION, THE LANDSCAPE CONTRACTOR SHALL BE RESPONSIBLE FOR LOCATING ALL UNDERGROUND UTILITIES AND SHALL AVOID DAMAGE TO ALL UTILITIES DURING THE COURSE OF THE WORK. THE LANDSCAPE CONTRACTOR IS RESPONSIBLE FOR REPAIRING ANY AND ALL DAMAGE TO UTILITIES, STRUCTURES, SITE APPURTENANCES, ETC. WHICH OCCUR AS A RESULT OF THE LANDSCAPE CONSTRUCTION.
9. THE LANDSCAPE CONTRACTOR IS RESPONSIBLE FOR FULLY MAINTAINING ALL PLANTINGS (INCLUDING, BUT NOT LIMITED TO, WATERING, SPRAYING, MULCHING, FERTILIZING, ETC.) UNTIL THE WORK IS ACCEPTED IN TOTAL BY THE LANDSCAPE ARCHITECT AND THE OWNER.
10. THE LANDSCAPE CONTRACTOR IS RESPONSIBLE FOR VERIFYING ALL QUANTITIES SHOWN ON THESE PLANS BEFORE PRICING THE WORK.
11. THE LANDSCAPE CONTRACTOR SHALL COMPLETELY GUARANTEE ALL PLANT MATERIAL FOR A PERIOD OF ONE (1) YEAR, BEGINNING AT THE DATE OF FINAL ACCEPTANCE. THE LANDSCAPE CONTRACTOR SHALL PROMPTLY MAKE ALL REPLACEMENTS BEFORE OR AT THE END OF THE GUARANTEE PERIOD (AS PER THE DIRECTION OF THE OWNER).
12. THE LANDSCAPE ARCHITECT OR OWNER SHALL APPROVE THE STAKED LOCATION OF ALL PLANT MATERIAL PRIOR TO INSTALLATION.
13. ANY PLANT MATERIAL WHICH DIES, TURNS BROWN OR DEFOLIATES (PRIOR TO TOTAL ACCEPTANCE OF THE WORK) SHALL BE PROMPTLY REMOVED FROM THE SITE AND REPLACED WITH MATERIALS OF THE SAME SPECIES, QUANTITY AND SIZE, MEETING ALL PLANT LIST SPECIFICATIONS.
14. ALL LANDSCAPING MATERIALS SHALL MEET THE MINIMUM SPECIFICATIONS AND STANDARDS DESCRIBED BY THE "AMERICAN STANDARD FOR NURSERY STOCK" MOST RECENT EDITION, PUBLISHED BY THE AMERICAN ASSOCIATION OF NURSERYMEN, 1250 1 STREET NW, SUITE 500, WASHINGTON, DC 20005.
15. ALL LANDSCAPING SHALL BE INSTALLED IN A SOUND WORKMAN-LIKE MANNER, ACCORDING TO ACCEPTED GOOD PLANTING PRACTICES AND PROCEDURES.
16. ALL AREAS NOT OTHERWISE COVERED BY BUILDINGS, PAVEMENT, OR PLANTING BEDS SHALL BE (SEEDED SODDED) WITH TURF-TYPE TALL FESCUE HYBRID (SEED SOD).
17. IN AREAS WHERE ORNAMENTAL PLANTS AND/OR TURF GRASSES ARE TO BE ESTABLISHED, SOIL SHALL BE REPLACED WITH IMPORTED TOPSOIL WHEN THE EXISTING SOIL PRESENTS THE FOLLOWING PROBLEMS:
   a. THE TEXTURE PH, OR NUTRIENT BALANCE OF THE AVAILABLE SOIL CANNOT BE MODIFIED BY REASONABLE MEANS TO PROVIDE AN ADEQUATE GROWTH MEDIUM;
   b. THE SOIL MATERIAL IS TOO SHALLOW TO PROVIDE AN ADEQUATE ROOT ZONE AND TO SUPPLY NECESSARY MOISTURE AND NUTRIENTS FOR PLANT GROWTH;
   c. THE SOIL CONTAINS SUBSTANCES POTENTIALLY TOXIC TO PLANT GROWTH; OTHERWISE, THE EXISTING SOILS SHALL BE MODIFIED THROUGH THE USE OF SOIL AMENDMENTS (I.E. PEATMOSS, PERLITE, LIME, GYPSUM, ETC.) TO PROVIDE AN ADEQUATE GROWING MEDIUM.
18. TOPSOIL SHALL BE FRIABLE AND LOAMY. IT SHALL BE FREE OF DEBRIS, TRASH, STUMPS, ROCKS, ROOTS, NOXIOUS WEEDS, AND SUBSTANCES POTENTIALLY TOXIC TO PLANTS.
19. ALL TOPSOIL SHALL MEET OR EXCEED THE FOLLOWING MINIMUM CRITERIA:
   a. SOIL SOLIDS SHALL CONSIST OF 40% SAND, 40% SLIT, 10% CLAY, AND 10% ORGANIC MATTER.
   b. PH LEVEL SHALL BE ADJUSTED AS NECESSARY TO MATCH THE SPECIFIC PH NEEDS OF THE PROPOSED PLANTS.
   c. SOLUBLE SALTS SHALL NOT EXCEED 500 PPM.
20. PLANTING SHALL OCCUR FROM MARCH 15TH TO MAY 15TH (SPRING PLANTING), OR FROM SEPTEMBER 1ST TO NOVEMBER 15TH (FALL PLANTING). ALL OTHER DATES WILL BE CONSIDERED OUT OF SEASON.

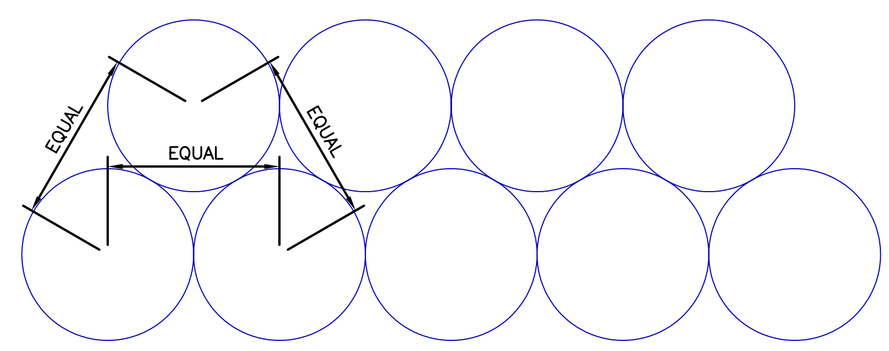

5 GROUNDCOVER SPACING DETAIL

N.T.S.

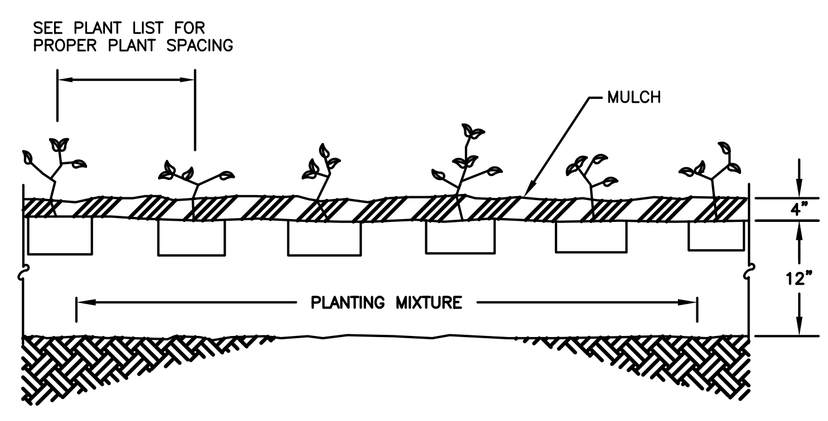

4 GROUNDCOVER PLANTING DETAIL

N.T.S.

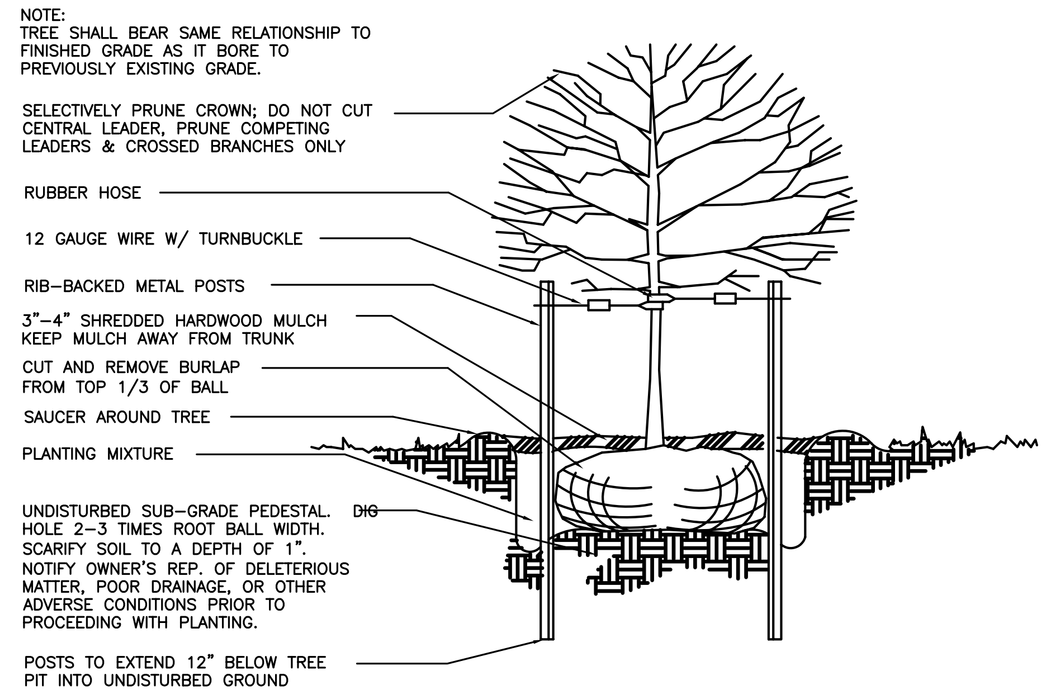

1 TREE PLANTING DETAIL

N.T.S.

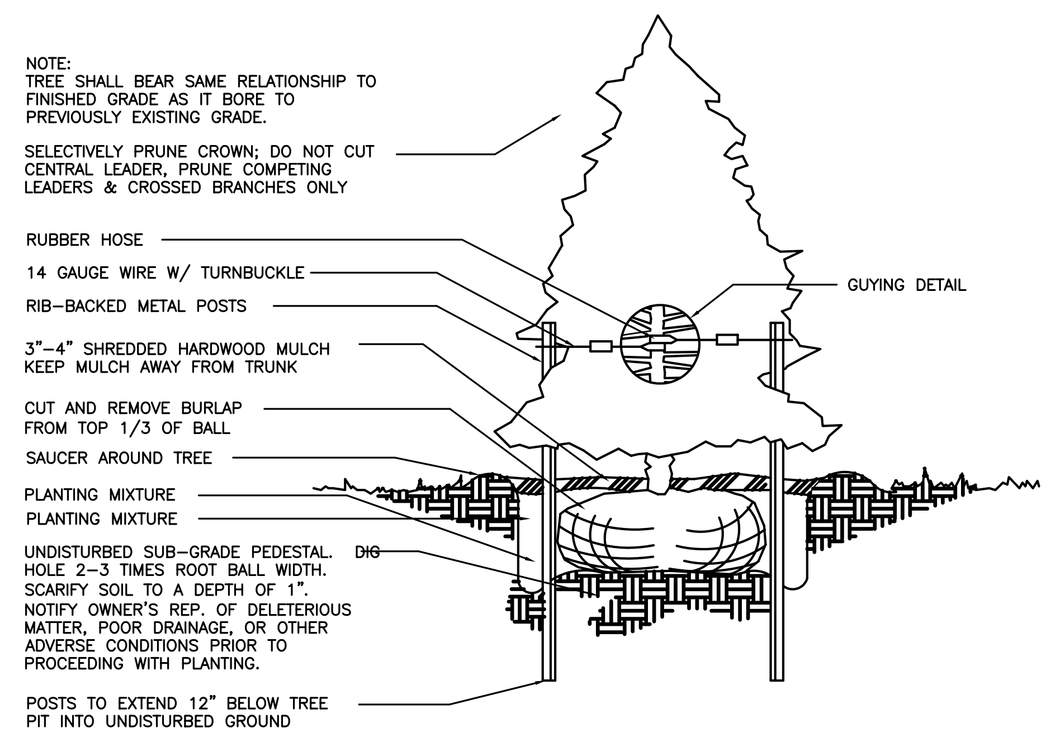

2 CONIFER PLANTING DETAIL

N.T.S.

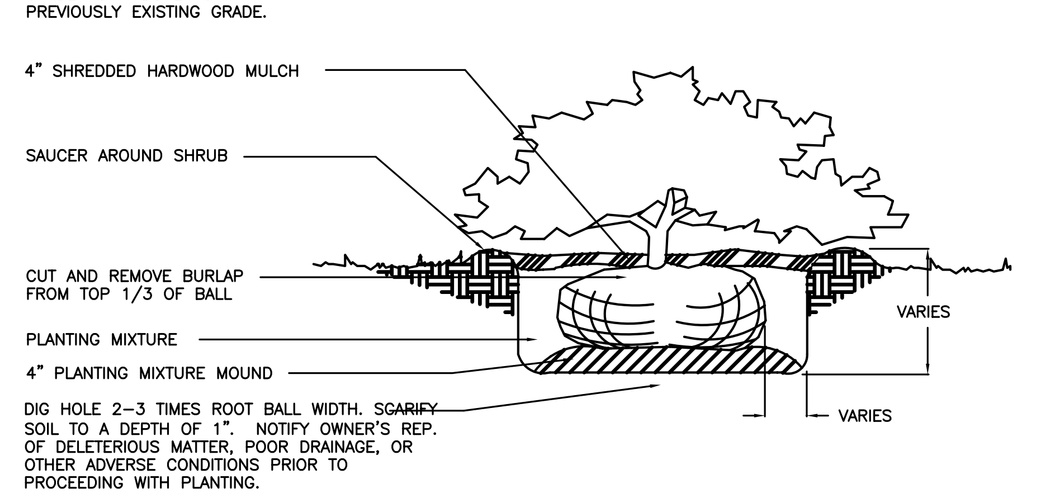

3 SHRUB PLANTING DETAIL

N.T.S.

US Army Corps of Engineers
Norfolk District

REV.	DATE	DESCRIPTION	BY	APP

DESIGNED: | CHECKED: | DATE: 16- AUGUST-04
DRAWN: | SUBMITTED: | SCALE: NTS
PROJECT NO. 031120 | NORFOLK DISTRICT FILE NO.
DRAWING NO. | SPECIFICATION NO.
Last worked on: | Plot scale: 1:1
File name:

NORFOLK DISTRICT
CORPS OF ENGINEERS
NORFOLK, VIRGINIA

CITY OF NEW YORK
DEPT. OF ENVIRONMENTAL PROTECTION
EAST OF HUDSON ADMINISTRATION BLDG.
TOWN OF MOUNT PLEASANT

LANDSCAPE DETAILS, NOTES & SCHEDULE

L-101
SHEET OF

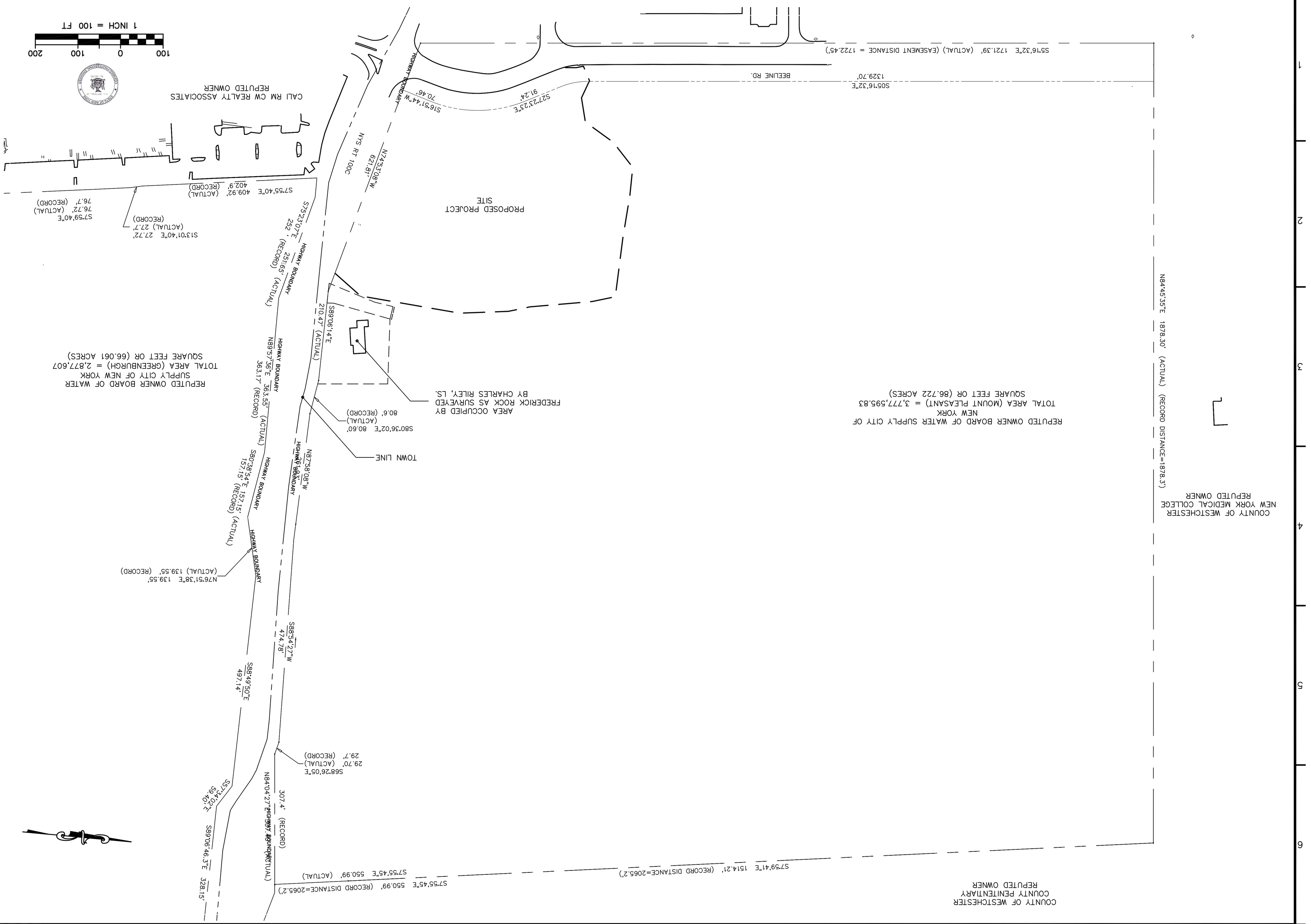

CITY OF NEW YORK
DEPT. OF ENVIRONMENTAL PROTECTION
EAST OF HUDSON ADMINISTRATION BLDG.
TOWN OF MOUNT PLEASANT
OVERALL PLAN

NORFOLK DISTRICT
CORPS OF ENGINEERS
NORFOLK, VIRGINIA

DESIGNED:	CHECKED:
DRAWN:	SUBMITTED:
PROJECT NO. 031120	NORFOLK DISTRICT FILE NO.
DRAWING NO.	SPECIFICATION NO.
Last worked on:	
File name:	Plot scale: 1:1

DATE: 16-AUGUST-04
SCALE: 1" = 100'

REV.	DATE	DESCRIPTION	BY	APP.

US Army Corps
of Engineers
Norfolk District

C-100
SHEET OF

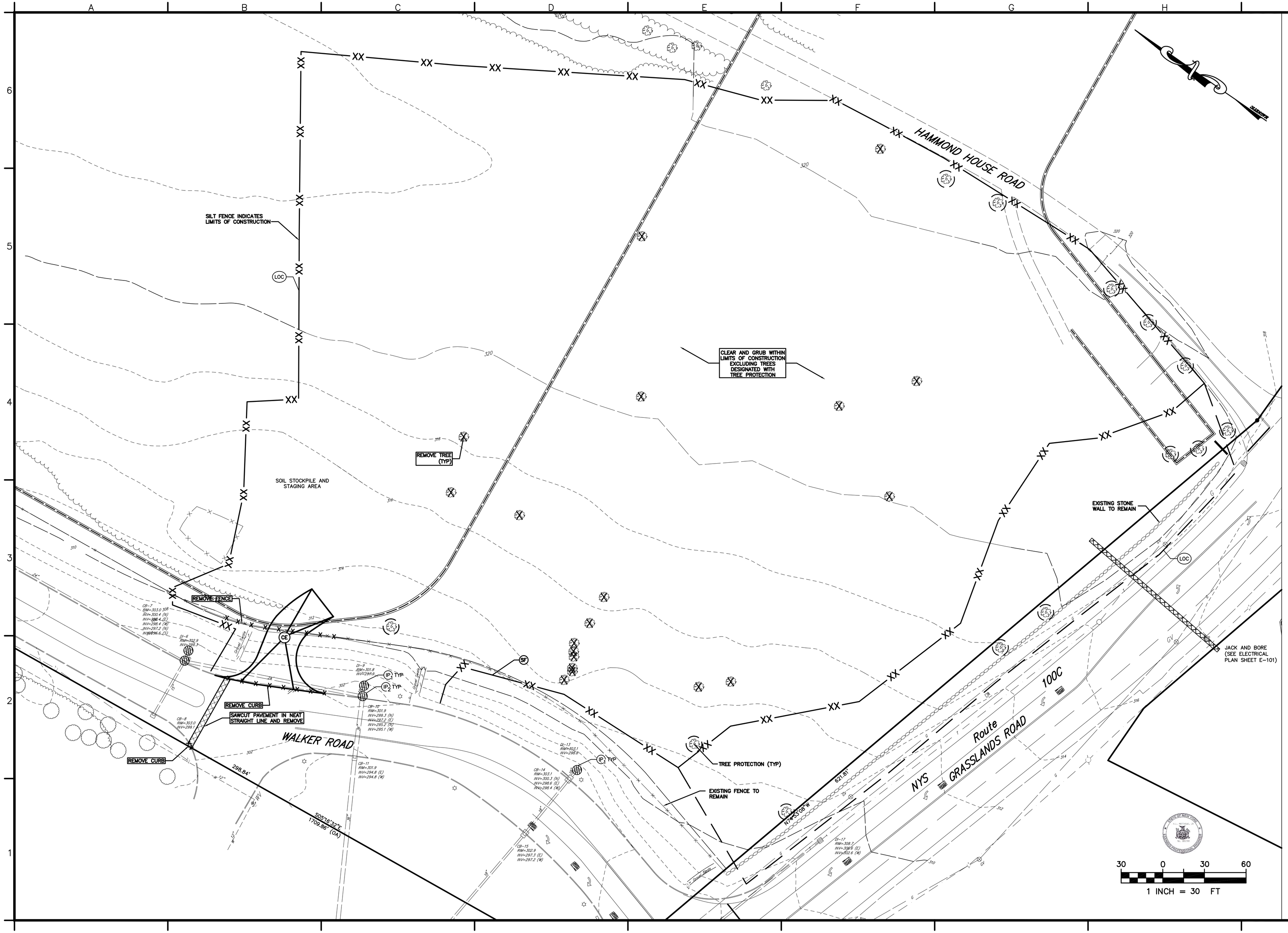

US Army Corps of Engineers
Norfolk District

REV.	DATE	DESCRIPTION	BY	APP.

DESIGNED:
CHECKED:
DRAWN:
SUBMITTED:
DATE: 16-AUGUST-04
SCALE: 1" = 30'
PROJECT NO. 031120
NORFOLK DISTRICT FILE NO.
DRAWING NO.
SPECIFICATION NO.
Last worked on:
File name:
Plot scale: 1:1

NORFOLK DISTRICT
CORPS OF ENGINEERS
NORFOLK, VIRGINIA

CITY OF NEW YORK
DEPT. OF ENVIRONMENTAL PROTECTION
EAST OF HUDSON ADMINISTRATION BLDG.
TOWN OF MOUNT PLEASANT

EXISTING, DEMOLITION, AND E & S PLAN

C-101
SHEET OF

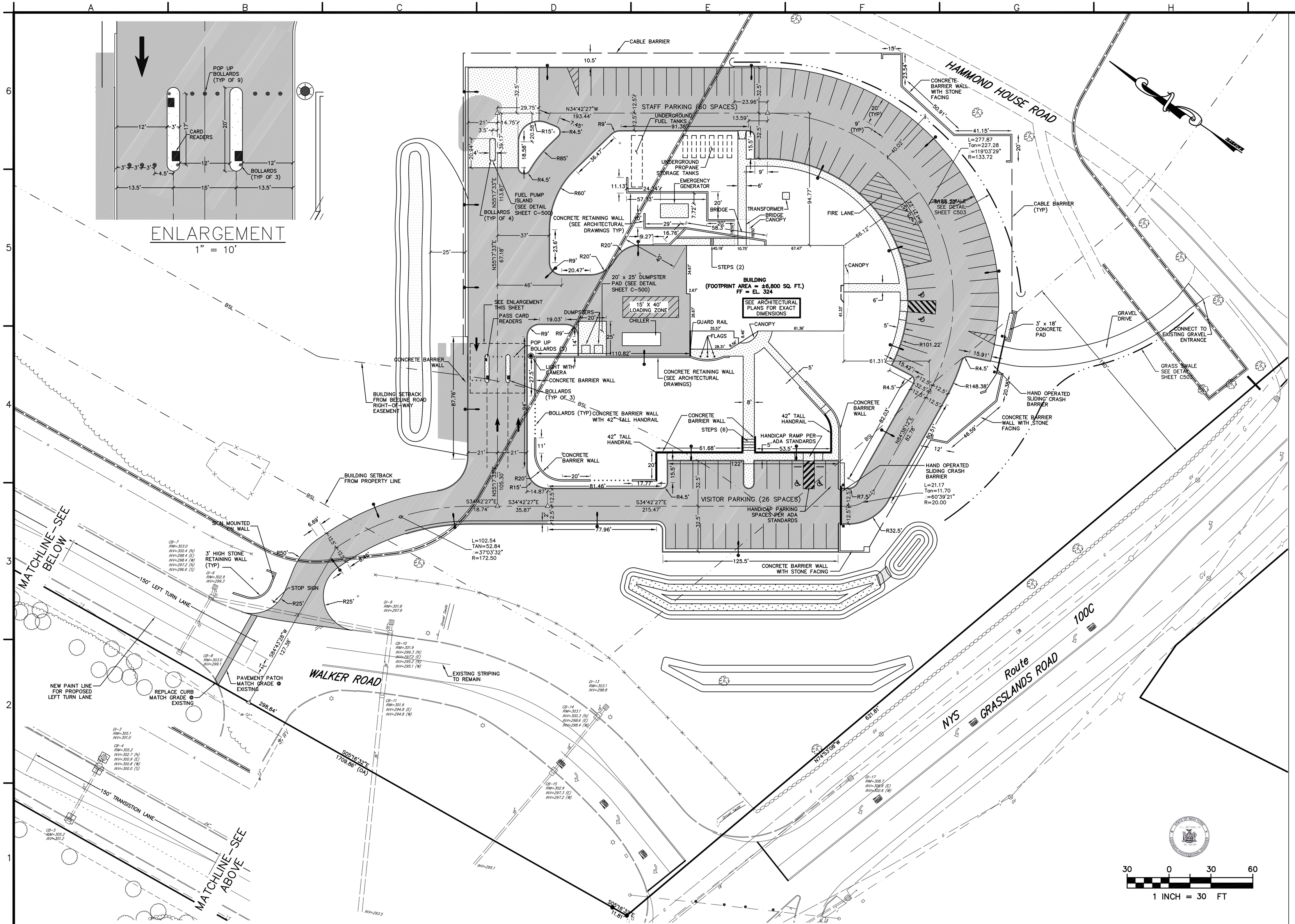

US Army Corps of Engineers
Norfolk District

REV.	DATE	DESCRIPTION	BY	APP.

DATE: 16-AUGUST-04
SCALE: 1"=30'
NORFOLK DISTRICT FILE NO.
SPECIFICATION NO.
Plot scale: 1:1

DESIGNED: JS
DRAWN: JS
CHECKED: DMW
SUBMITTED: DMW
PROJECT NO. 031120
DRAWING NO.
Last worked on:
File name:

NORFOLK DISTRICT
CORPS OF ENGINEERS
NORFOLK, VIRGINIA

CITY OF NEW YORK
DEPT. OF ENVIRONMENTAL PROTECTION
EAST OF HUDSON ADMINISTRATION BLDG.
TOWN OF MOUNT PLEASANT

LAYOUT PLAN

C-102
SHEET OF

STORM SCHEDULE

(10) STD' DI
RIM = 320.00
INV = 318.00

(10) TO (9) 83 LF – 12"RCP @ 0.90%

(9) STD' DI
RIM = 319.00
INV (ALL)= 317.25

(9) TO (7) 85 LF – 12"RCP @ 0.30%

(7) STD' DI
RIM = 319.00
INV (ALL) = 317.00

(8) TO (7) 72 LF – 12"RCP @ 1.4%

(8) STD' DI
RIM = 320.00
INV = 318.00

(7) TO (3) 107 LF – 12"RCP @ 4.67%

(6) TO (3) 173 LF – 12"RCP @ 1.0%

(6) STD' DI
RIM = 317.00
INV = 313.73

(3) STD' MH
RIM = 314.00
INV (ALL) = 312.06

(5) TO (4) 245 LF – 12" CLASS IV
RCP @ 0.15%

(5) STD' CI
RIM = 314.12
INV = 312.60

(4) TO (3) 112 LF – 18" CLASS IV
RCP @ 0.15%

(4) STD' CI
RIM = 315.60
INV = 312.23

(3) TO BMP 7 LF – 18"RCP @ 0.86%

BMP 18" FES
RIM = 315.50
INV = 312.00

(2) STD' DI
RIM = 313.50
INV (N) = 306.45
INV (NE) = 300.81
INV (S) = 300.21
INV (SE) = 313.00

(2) TO (1) 121 LF – 24"RCP @ 1.0%

(1) *EXISTING DI*
RIM = 303.1
INV (W) = 298.8
INV (E) = 299.00

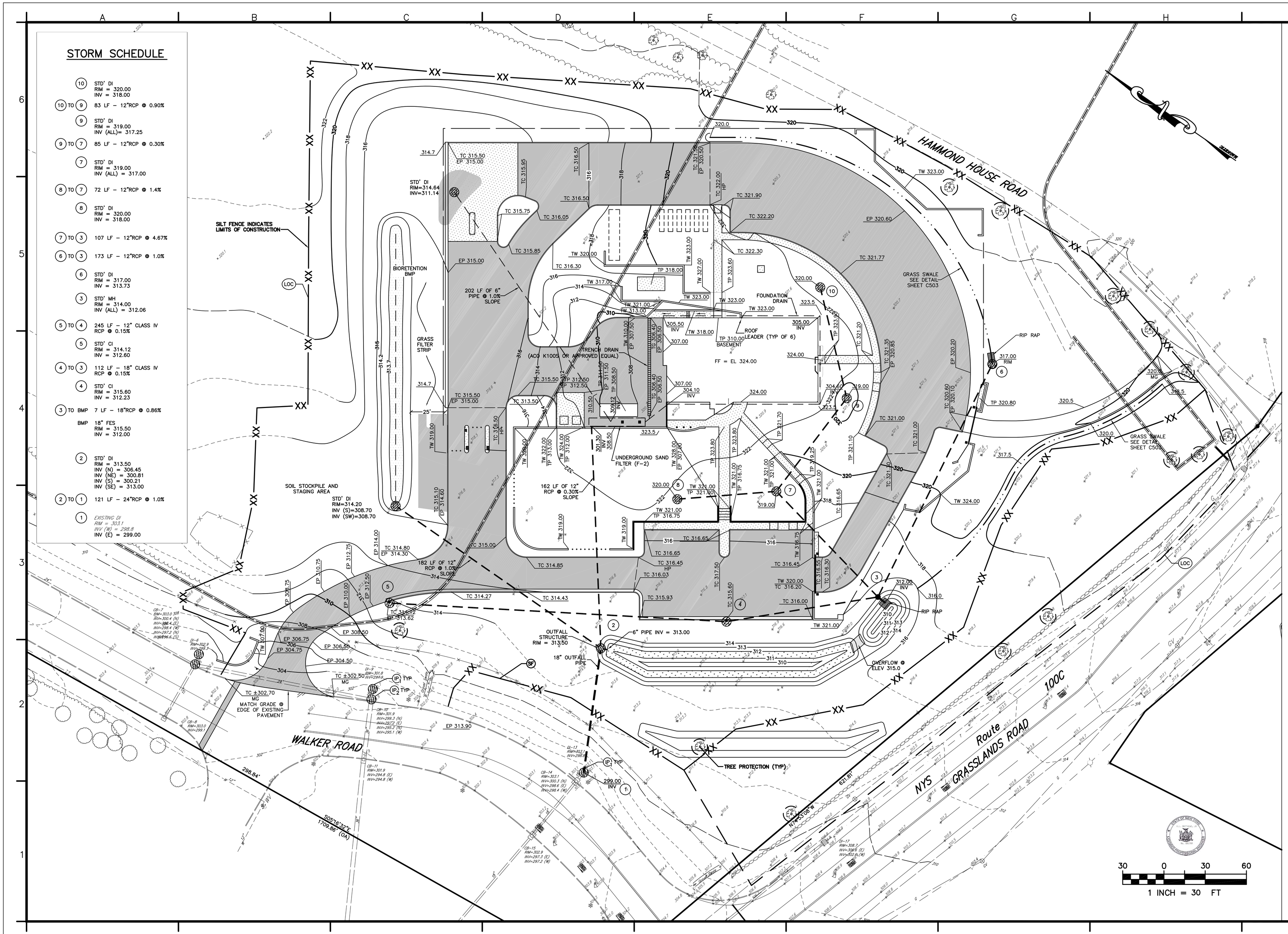

US Army Corps of Engineers
Norfolk District

REV.	DATE	DESCRIPTION	BY	APP.

DATE: 16-AUGUST-04
SCALE: 1"=30'
NORFOLK DISTRICT FILE NO.
SPECIFICATION NO.
Plot scale: 1:1

CHECKED: DMW
SUBMITTED: DMW
DESIGNED: JS
DRAWN: JS
PROJECT NO. 031120
DRAWING NO.
Last worked on:
File name:

NORFOLK DISTRICT
CORPS OF ENGINEERS
NORFOLK, VIRGINIA

CITY OF NEW YORK
DEPT. OF ENVIRONMENTAL PROTECTION
EAST OF HUDSON ADMINISTRATION BLDG.
TOWN OF MOUNT PLEASANT

GRADING AND DRAINAGE PLAN

C–103
SHEET OF X

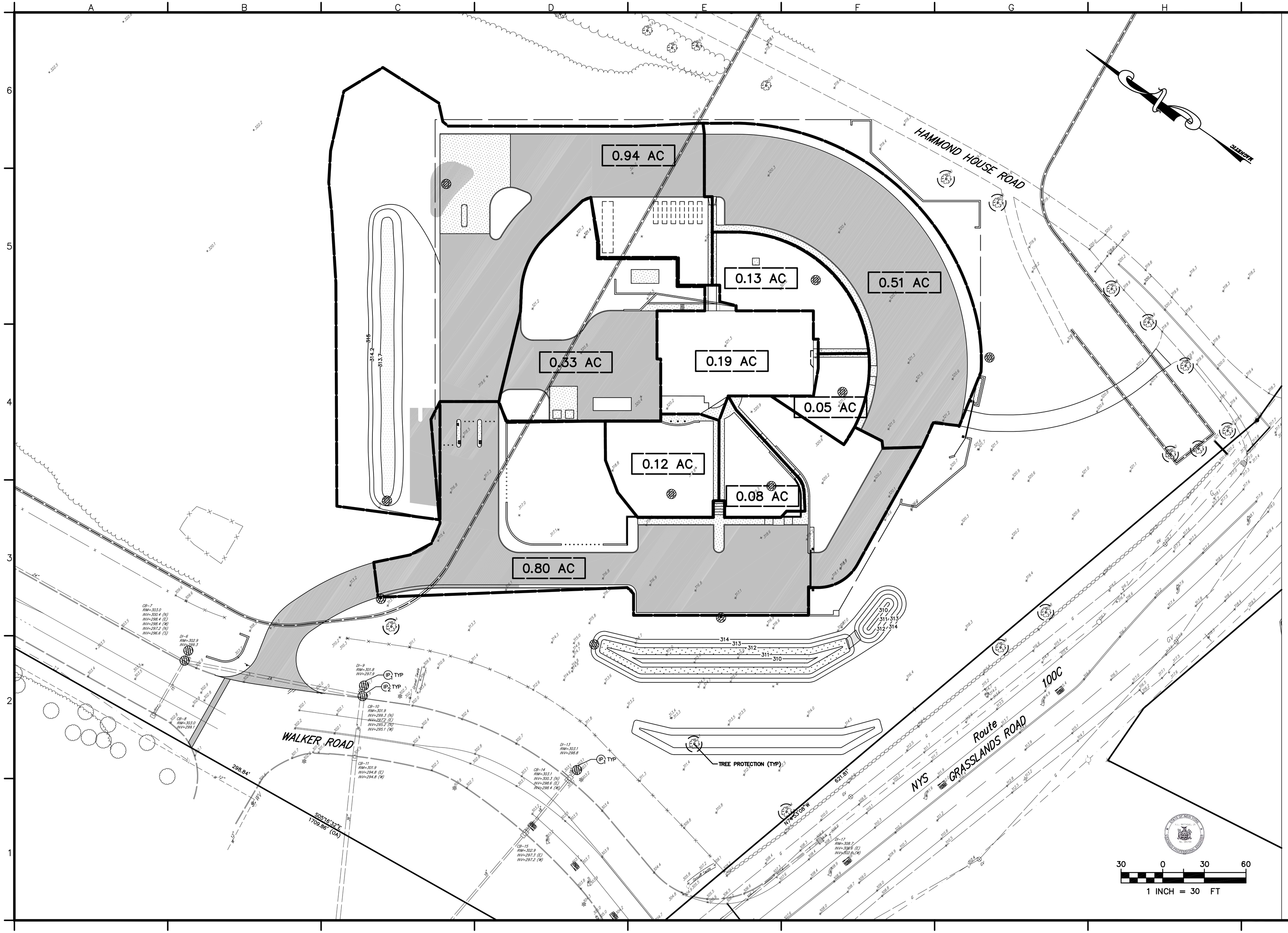

US Army Corps of Engineers
Norfolk District

REV.	DATE	DESCRIPTION	BY	APP.

DESIGNED: JS	CHECKED: DMW	DATE: 16-AUGUST-04
DRAWN: JS	SUBMITTED: DMW	SCALE: 1"=30'
PROJECT NO. 031120		NORFOLK DISTRICT FILE NO.
DRAWING NO.		SPECIFICATION NO.
Last worked on:		Plot scale: 1:1
File name:		

NORFOLK DISTRICT
CORPS OF ENGINEERS
NORFOLK, VIRGINIA

CITY OF NEW YORK
DEPT. OF ENVIRONMENTAL PROTECTION
EAST OF HUDSON ADMINISTRATION BLDG.
TOWN OF MOUNT PLEASANT

DRAINAGE AREA PLAN

C-104
SHEET OF

SANITARY FORCEMAIN MANHOLE CONNECTION

1" = 30'

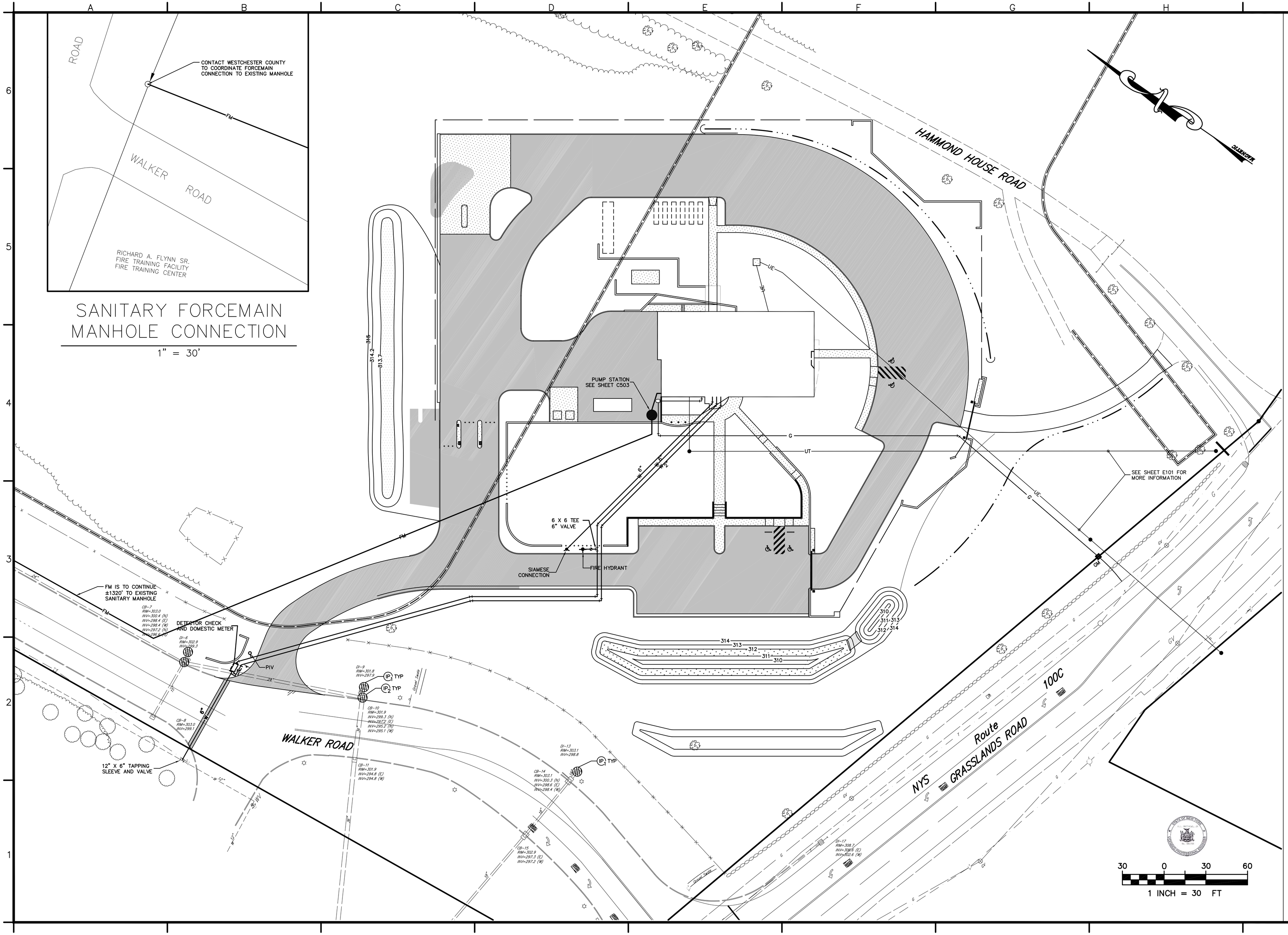

US Army Corps of Engineers Norfolk District

REV.	DATE	DESCRIPTION	BY	APP.

DESIGNED: JS
DRAWN: JS
CHECKED: DMW
SUBMITTED: DMW
DATE: 16-AUGUST-04
SCALE: 1"=30'
PROJECT NO. 031120
NORFOLK DISTRICT FILE NO.
DRAWING NO.
SPECIFICATION NO.
Last worked on:
File name:
Plot scale: 1:1

NORFOLK DISTRICT
CORPS OF ENGINEERS
NORFOLK, VIRGINIA

CITY OF NEW YORK
DEPT. OF ENVIRONMENTAL PROTECTION
EAST OF HUDSON ADMINISTRATION BLDG.
TOWN OF MOUNT PLEASANT

UTILITY PLAN

C-105
SHEET OF

Figure 5A.15
Curb Drop Inlet Protection Details

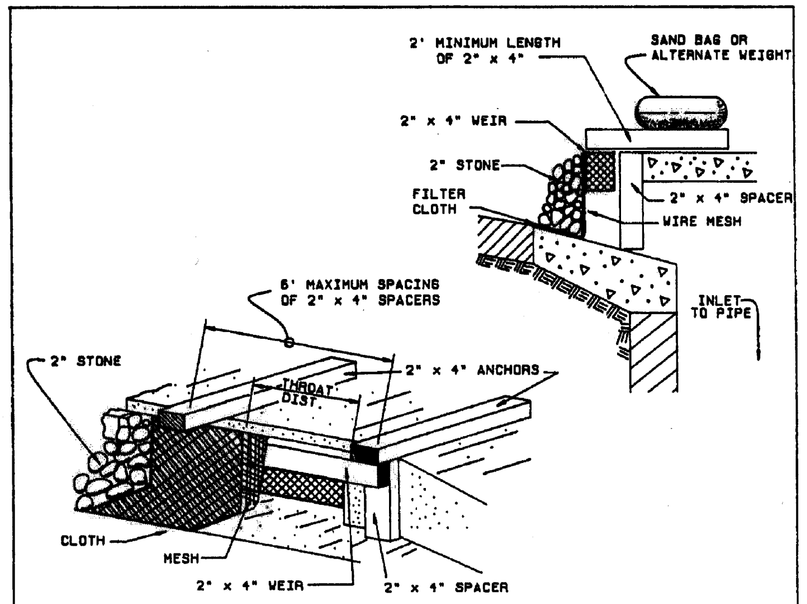

CONSTRUCTION SPECIFICATIONS

1. FILTER FABRIC SHALL HAVE AN EOS OF 40-85.
2. WOODEN FRAME SHALL BE CONSTRUCTED OF 2" x 4" CONSTRUCTION GRADE LUMBER.
3. WIRE MESH ACROSS THROAT SHALL BE A CONTINUOUS PIECE 30 INCH MINIMUM WIDTH WITH A LENGTH 4 FEET LONGER THAN THE THROAT. IT SHALL BE SHAPED AND SECURELY NAILED TO A 2" x 4" WEIR.
4. THE WEIR SHALL BE SECURELY NAILED TO 2" x 4" SPACERS 9 INCHES LONG SPACED NO MORE THAN 6 FEET APART.
5. THE ASSEMBLY SHALL BE PLACED AGAINST THE INLET AND SECURED BY 2" x 4" ANCHORS 2 FEET LONG EXTENDING ACROSS THE TOP OF THE INLET AND HELD IN PLACE BY SANDBAGS OR ALTERNATE WEIGHTS.

MAXIMUM DRAINAGE AREA 1 ACRE

U.S. DEPARTMENT OF AGRICULTURE NATURAL RESOURCES CONSERVATION SERVICE SYRACUSE, NEW YORK	CURB GUTTER INLET PROTECTION STRUCTURE	STANDARD SYMBOL

Figure 5A.9
Silt Fence Details

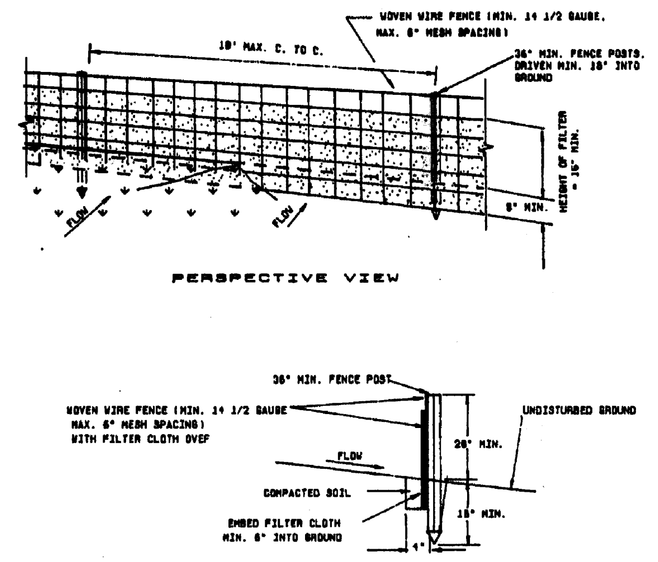

CONSTRUCTION NOTES FOR FABRICATED SILT FENCE

1. WOVEN WIRE FENCE TO BE FASTENED SECURELY TO FENCE POSTS WITH WIRE TIES OR STAPLES.
2. FILTER CLOTH TO BE TO BE FASTENED SECURELY TO WOVEN WIRE FENCE WITH TIES SPACED EVERY 24" AT TOP AND MID SECTION.
3. WHEN TWO SECTIONS OF FILTER CLOTH ADJOIN EACH OTHER THEY SHALL BE OVERLAPPED BY SIX INCHES AND FOLDED.
4. MAINTENANCE SHALL BE PERFORMED AS NEEDED AND MATERIAL REMOVED WHEN "BULGES" DEVELOP IN THE SILT FENCE

POSTS: STEEL EITHER "T" OR "U" TYPE OR 2" HARDWOOD

FENCE: WOVEN WIRE, 14 1/2 GA. 6" MAX. MESH OPENING

FILTER CLOTH: FILTER X, MIRAFI 100X, STABILINKA T140N OR APPROVED EQUAL.

PREFABRICATED UNIT: GEOFAB, ENVIROFENCE, OR APPROVED EQUAL.

U.S. DEPARTMENT OF AGRICULTURE NATURAL RESOURCES CONSERVATION SERVICE SYRACUSE, NEW YORK	SILT FENCE	STANDARD SYMBOL

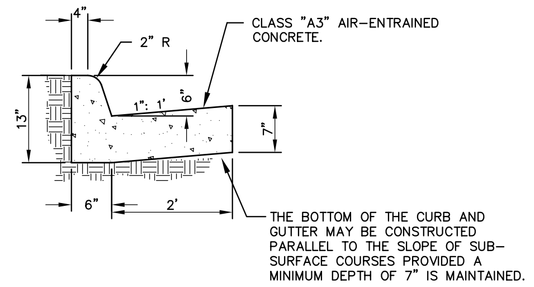

CURB AND GUTTER
NTS

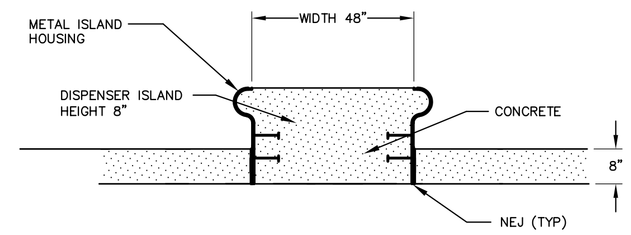

FUEL ISLAND DETAIL
NTS

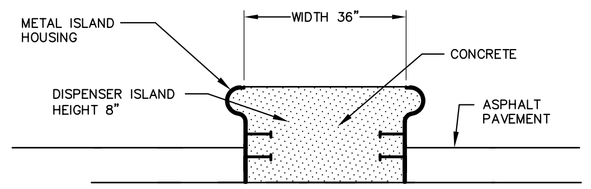

CARD READER ISLAND DETAIL
NTS

NOTES

1. ANY AND ALL MATERIAL OR DEBRIS TRACKED ONTO A PUBLIC OR PRIVATE ROAD SURFACE WILL BE CLEANED THOROUGHLY AT THE END OF EACH DAY. SEDIMENT SHALL BE REMOVED FROM ROADS BY SHOVELING OR SWEEPING AND BE TRANSPORTED TO A SEDIMENT CONTROLLED DISPOSAL AREA.
2. ALL EXCAVATED MATERIAL SHALL BE DISPOSED OF IN A LAWFUL MANNER.

CONSTRUCTION SEQUENCING

1. ACQUIRE NECESSARY PERMITS.
2. INSTALL OUTFLOW PIPES & SEDIMENT BASINS AND OTHER SEDIMENT CONTROL DEVICES IN ACCORDANCE WITH VE&SC STANDARDS.
3. CLEAR AND GRUB AS INDICATED ON PLANS.
4. ROUGH GRADE SITE.
5. INSTALL UNDERGROUND UTILITIES.
6. INSTALL CURB AS PER EROSION & SEDIMENT CONTROL NARRATIVE.
7. BACKFILL CURB. GRADE ALL DISTURBED AREAS.
8. DRESS AND OVERSEED ALL DISTURBED AREAS AND IMMEDIATELY ESTABLISH PERMANENT VEGETATIVE COVER. MAINTAIN VEGETATIVE COVER THROUGHOUT DURATION OF PROJECT.
9. PLACE BASE STONE AS PER EROSION & SEDIMENT CONTROL NARRATIVE.
10. CONVERT SEDIMENT BASINS INTO INFILTRATIO/DETENTIONN BASINS AS PER EROSION & SEDIMENT CONTROL NARRATIVE.
11. PAVE.
12. REPAIR ANY INADVERTENT EROSION AND REMOVE ANY INADVERTENT SEDIMENTATION.
13. REMOVE REMAINING TEMPORARY SEDIMENT AND EROSION CONTROL MEASURES WITHIN THIRTY DAYS AFTER FINAL SITE IS STABILIZED WITH VEGETATIVE GROWTH.

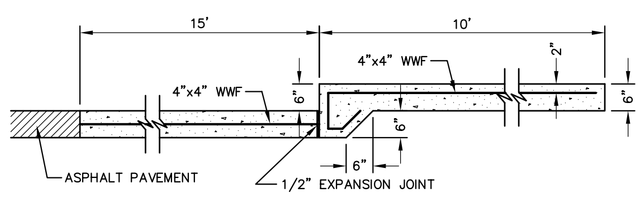

DUMPSTER PAD
NTS

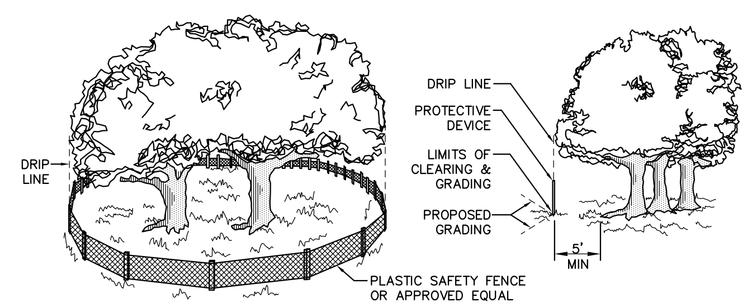

TREE PROTECTION
NTS (TP)

BARRIER RATING: CONDITION DESIGNATION K4, K8, K12

OPERATION: THE BOLLARDS RISE FROM PITS IN THE ROADWAY

MANUFACTURER: D.A

COMMENT: DEPLOYMENT SPEED VARIES WITH HYDRAULIC AND PNEUMATIC OPERATORS

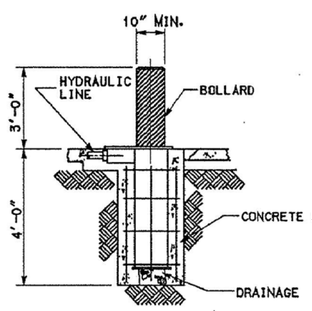

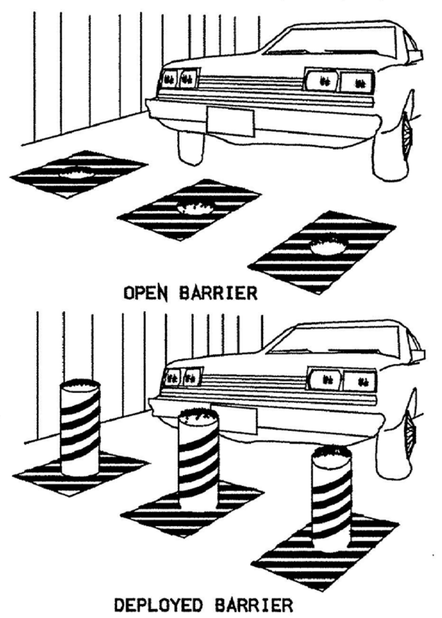

VB-4 BOLLARDS

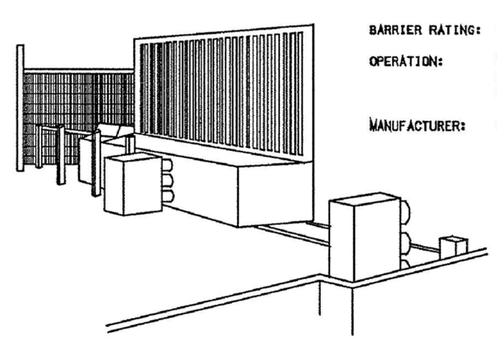

BARRIER RATING: CONDITION DESIGNATION K12

OPERATION: MASSIVE BASE WITH HEAVY RAILING SECTION ROLLS HORIZONTALLY INTO PLACE TO BE RESTRAINED BY HEAVY STANDARDS.

MANUFACTURER: D

VB-6 ANTI-CRASH GATE

Figure 5A.38
Stabilized Construction Entrance Details

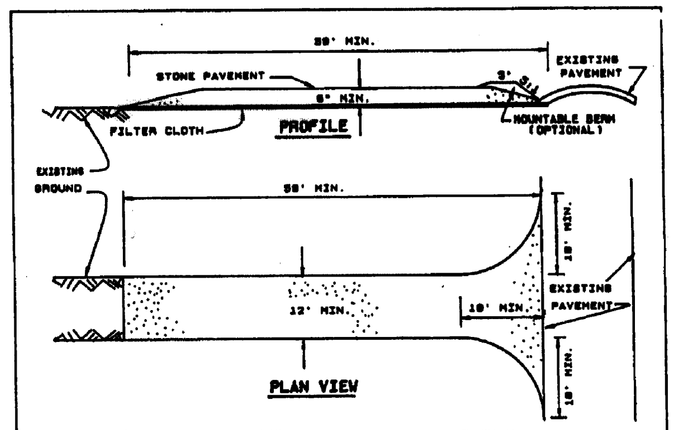

CONSTRUCTION SPECIFICATIONS

1. STONE SIZE - USE 2" STONE, OR RECLAIMED OR RECYCLED CONCRETE EQUIVALENT.
2. LENGTH - NOT LESS THAN 50 FEET (EXCEPT ON A SINGLE RESIDENCE LOT WHERE A 30 FOOT MINIMUM LENGTH WOULD APPLY).
3. THICKNESS - NOT LESS THAN (6) INCHES.
4. WIDTH - TWELVE (12) MINIMUM, BUT NOT LESS THAN THE FULL WIDTH AT POINTS WHERE INGRESS OR EGRESS OCCURS. TWENTY-FOUR (24) FOOT IF SINGLE ENTRANCE TO SITE.
5. FILTER CLOTH - WILL BE PLACED OVER THE ENTIRE AREA PRIOR TO PLACING OF STONE.
6. SURFACE WATER - ALL SURFACE WATER FLOWING OR DIVERTED TOWARD CONSTRUCTION ENTRANCES SHALL BE PIPED ACROSS THE ENTRANCE. IF PIPING IS IMPRACTICAL, A MOUNTABLE BERM WITH 5:1 SLOPES WILL BE PERMITTED.
7. MAINTENANCE - THE ENTRANCE SHALL BE MAINTAINED IN A CONDITION WHICH WILL PREVENT TRACKING OR FLOWING OF SEDIMENT ONTO PUBLIC RIGHTS-OF-WAY. ALL SEDIMENT SPILLED, DROPPED, WASHED OR TRACTED ONTO PUBLIC RIGHTS-OF-WAY MUST BE REMOVED IMMEDIATELY.
8. WHEN WASHING IS REQUIRED, IT SHALL BE DONE ON AN AREA STABLIZED WITH STONE AND WHICH DRAINS INTO AM APPROVED SEDIMENT TRAPPING DEVICE.
9. PERIODIC INSPECTION AND NEEDED MAINTENANCE SHALL BE PROVIDED AFTER EACH RAIN.

U.S. DEPARTMENT OF AGRICULTURE NATURAL RESOURCES CONSERVATION SERVICE SYRACUSE, NEW YORK	STABLIZED CONSTRUCTION ENTRANCE	STANDARD SYMBOL

US Army Corps of Engineers
Norfolk District

REV.	DATE	DESCRIPTION	BY	APP.

DESIGNED: JS | CHECKED: DMW | DATE: 16-AUGUST-04
DRAWN: JS | SUBMITTED: DMW | SCALE: NTS
PROJECT NO. 031120 | NORFOLK DISTRICT FILE NO.
DRAWING NO. | SPECIFICATION NO.
Last worked on: | Plot scale: 1:1
File name:

NORFOLK DISTRICT
CORPS OF ENGINEERS
NORFOLK, VIRGINIA

CITY OF NEW YORK
DEPT. OF ENVIRONMENTAL PROTECTION
EAST OF HUDSON ADMINISTRATION BLDG.
TOWN OF MOUNT PLEASANT

DETAILS AND GENERAL NOTES

C-500
SHEET OF

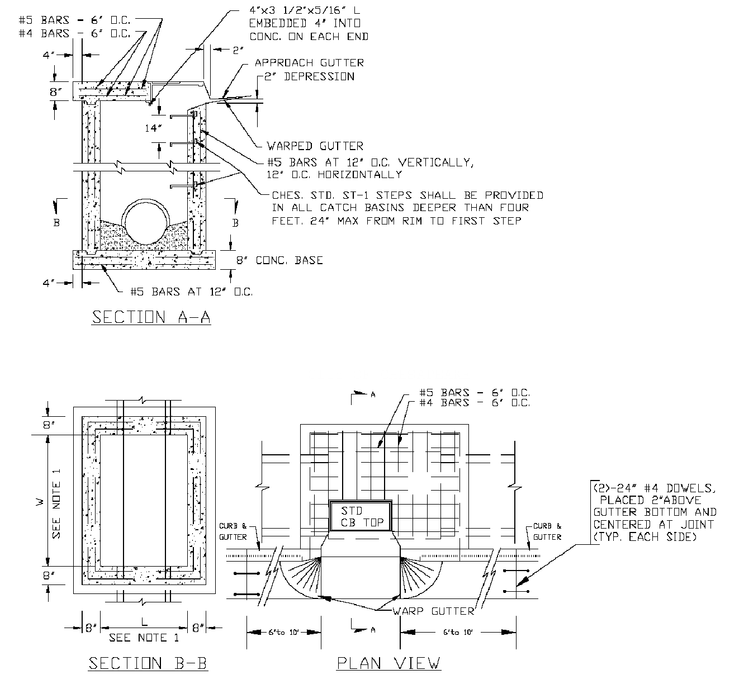

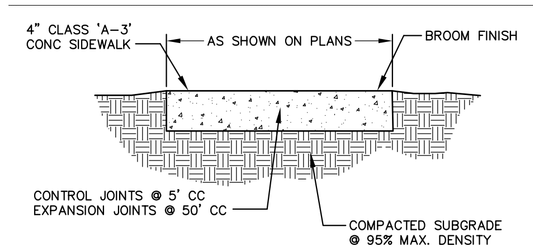

SUBGRADE COMPACTED TO 95% MAX. THEORETICAL DENSITY @ OPTIMUM MOISTURE CONTENT. *

* IF SUBGRADE SHOULD BECOME EXCESSIVELY WET IMMEDIATELY PRIOR TO OR DURING CONSTRUCTION, THEN IT SHOULD BE EITHER SCARIFIED, DRIED AND RECOMPACTED OR UNDERCUT AND REPLACED WITH A SAND SUBBASE.

SIDEWALK

NTS

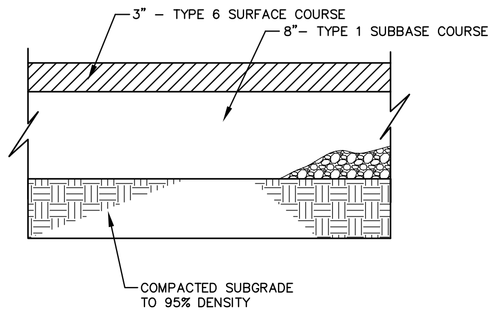

SUBGRADE COMPACTED TO 95% THEORETICAL DENSITY (VTM-1) @ OPTIMUM MOISTURE CONTENT. *

* IF SUBGRADE SHOULD BECOME EXCESSIVELY WET IMMEDIATELY PRIOR TO OR DURING CONSTRUCTION, THEN IT SHOULD BE EITHER SCARIFIED, DRIED AND RECOMPACTED OR UNDERCUT AND REPLACED WITH A SAND SUBBASE.

PAVEMENT SECTION

NTS

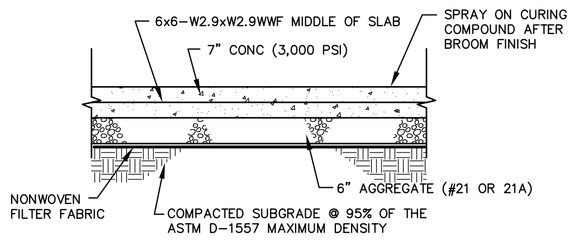

CONCRETE PAVEMENT

NTS

CONCRETE JOINT NOTES:

1. ALL PANELS ARE SEPARATED BY CONTRACTION JOINTS. CONTRACTION JOINTS SHALL BE APPROXIMATELY SQUARE WITH THE MAXIMUM SIDE NO GREATER THAN 15'.
2. WHERE PAVEMENT ABUTS VERTICAL CONCRETE SURFACES, AN EXPANSION JOINT AND SEAL SHALL BE PROVIDED.
3. CONSTRUCTION JOINTS SHALL BE USED AT STOPPING PLACES IN THE PROCESS OF CONSTRUCTION.
4. JOINTS SHALL INTERSECT ALL CURVES RADIALLY WITH A MINIMUM RADIAL LENGTH = 1'.
5. ALL CONCRETE SHALL HAVE A BROOM OR BELT FINISH.

DRAINAGE STRUCTURE NOTES

L & W EQUALS 3' OR O.D. OF PIPE, WHICHEVER IS GREATER, WHERE DEPTH DOES NOT EXCEED 4'. L & W EQUALS 4' OR O.D. OF PIPE, WHICHEVER IS GREATER, WHERE DEPTH EXCEEDS 4'.

NON-REINFORCED CONCRETE WALLS AND FLOOR MAY BE USED FOR STRUCTURES LESS THAN 6' DEEP AND PIPE SIZES LESS THAN OR EQUAL TO 48".

PRECAST CATCH BASINS MAY BE SUBSTITUTED UPON APPROVAL OF DESIGN BY THE DEPARTMENT OF PUBLIC WORKS.

CAST IRON TOPS AND FRAMES SHALL BE SUFFICIENTLY TRUE TO A PLANE SURFACE SO THAT TOPS WILL NOT ROCK

CAST-IN-PLACE CONCRETE TO BE A3, PRECAST TO BE 4600 PSI.

STRUCTURES DEEPER THAN 16' REQUIRE SPECIAL DESIGN.

REINFORCEMENT IN THE TOP WILL BE REQUIRED AS PER SECTION A-A AT ALL DEPTHS.

THE INVERT IS TO BE SHAPED IN ACCORDANCE WITH STANDARD PLAN IS-1. FURNISHING AND PLACING ALL MATERIALS INCIDENTAL TO THE SHAPING IS TO BE INCLUDED IN THE PRICE BID.

DRAINAGE STRUCTURE FOUNDATION SLAB TO BE PLACED ON A BED OF AGGREGATE BASE STONE WHERE NECESSARY FOR STABILIZATION. STONE SHALL BE MIN. OF SIX INCHES (6") DEEP FOR 48" AND SMALLER PIPE. TWELVE INCHES (12") DEEP FOR LARGER THAN 48" PIPE.

PLACE FABRIC AT JOINTS OF PRECAST STRUCTURES

DESIGN AND CONSTRUCTION STANDARDS

CATCH BASIN CONCRETE
(21" - 60" PIPE) MAX. DEPTH 16'

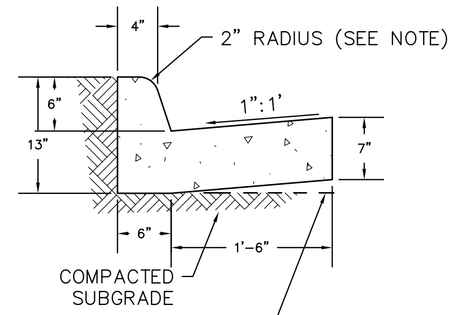

THE BOTTOM OF THE CURB AND GUTTER MAY BE CONSTRUCTED PARALLEL TO THE SLOPE OF SUBSURFACE COURSES PROVIDED A MINIMUM THICKNESS OF 7 " IS MAINTAINED.

NOTE: STANDARD CURB SHAPE OF THE STATE IN WHICH THE PROJECT IS LOCATED MAY BE SUBSTITUTED.

CURB AND GUTTER

NTS

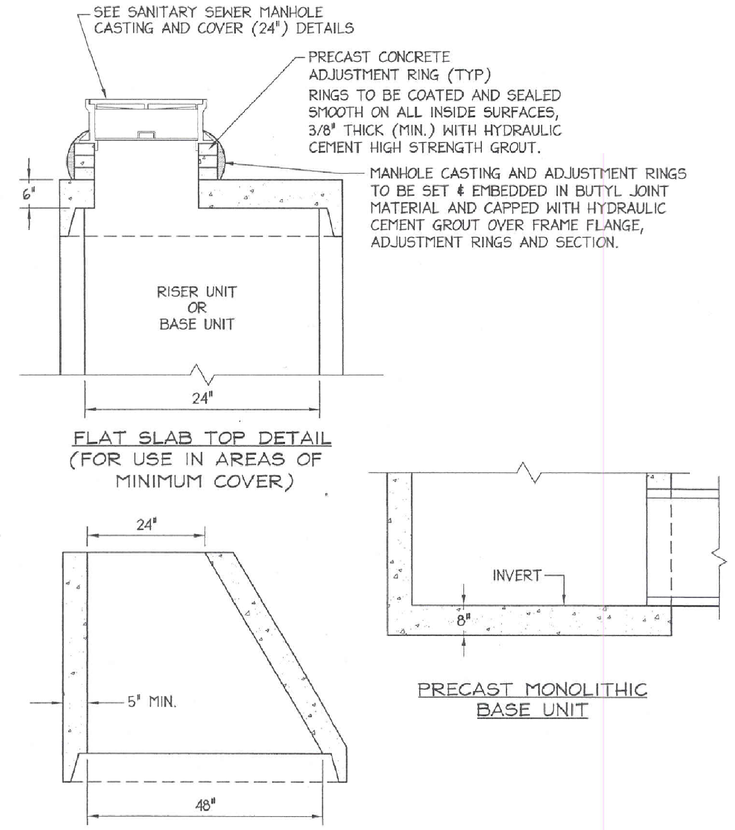

PRECAST CONCRETE STORM DRAIN MANHOLE

NOT TO SCALE

NOTES:

1. ALL BASE, RISER AND TAPER UNITS ARE TO BE IN ACCORDANCE WITH THE REQ OF AASHTO M199, EXCEPT THAT MINIMUM WALL THICKNESS IS TO BE 5".
2. WALL THICKNESS TO BE 5" MINIMUM FOR 48" INSIDE DIAMETER MANHOLES AND 6" MINIMUM FOR 60" INSIDE DIAMETER MANHOLES.
3. INSIDE DIAMETER OF MANHOLE MUST INCREASE TO 60" WHEN MANHOLE DEPTH IS GREATER THAN 12 FEET. 60" DIAMETER TO BE CONTINUOUS UP TO CONE SECTION.
4. BASE UNITS MUST BE 4'-0" IN HEIGHT FOR USE WITH 30" OR 36" PIPES.
5. BASE SLAB MAY BE PRECAST OR POURED IN PLACE. SLAB TO BE 8" DEEP FOR PRECAST AND 12" DEEP FOR POURED IN PLACE. REINFORCE POURED IN PLACE SLAB WITH #5 REBAR @ 12" O.C. EACH WAY. ALL REBAR TO HAVE 1-1/2" COVER. CONCRETE TO BE CLASS A-3.
6. PROVIDE A MAXIMUM OF TWO LIFT HOLES PER SECTION. PLUG LIFT HOLES WATERTIGHT WITH RUBBER PLUG AND GROUT AFTER INSTALLATION.
7. OPENINGS FOR PIPE IN BASE AND RISER UNITS ARE TO BE PRECAST. THE CONTRACTOR WILL FURNISH THE FABRICATOR WITH THE ANGLES BETWEEN CENTER LINES, THE INVERT ELEVATIONS, AND THE SIZE OF ALL PIPES TO ENTER THE MANHOLE.
8. REFER TO THE STORM DRAIN SHAPING DETAIL FOR INVERT SHAPING.

PRECAST CONCRETE STORM DRAIN MANHOLE

NOT TO SCALE

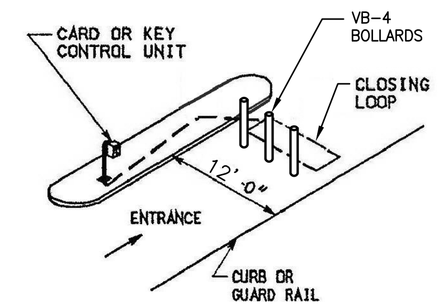

VEHICLE STOPS AT CONTROL UNIT TO ALLOW INSERTION OF CARD, AND CAUSE GATE ARM TO RAISE. CLOSING LOOP DETECTOR SENSES CAR AND LOWERS GATE ARM AS CAR MOVES AWAY. CLOSING LOOP WILL ALSO DETECT A VEHICLE PASSING THROUGH THE GATE WITHOUT PROPER AUTHORIZATION AND ACTIVATE AN ALARM OR VEHICLE BARRIER.

DETECTION LOOP
CONTROLS ENTRY ONLY

TC-6 TRAFFIC DETECTORS

CUBIC YARDS IN STANDARD CONCRETE STEPS					
NO. OF STEPS	4' WIDE	5' WIDE	6' WIDE	7' WIDE	ADDITIONAL CU. YDS. PER 1' WIDTH
2	0.4	0.5	0.5	0.6	0.1
3	0.6	0.7	0.8	0.9	0.1
4	0.8	0.9	1.0	1.2	0.1
5	1.0	1.2	1.3	1.4	0.1
6	1.2	1.4	1.5	1.7	0.2
7	1.4	1.6	1.8	2.0	0.2
8	1.6	1.8	2.0	2.3	0.2
9	1.8	2.0	2.3	2.6	0.3
10	2.0	2.3	2.5	2.8	0.3
ADDITIONAL STEP INCREMENT	0.2	0.2	0.2	0.3	0.1

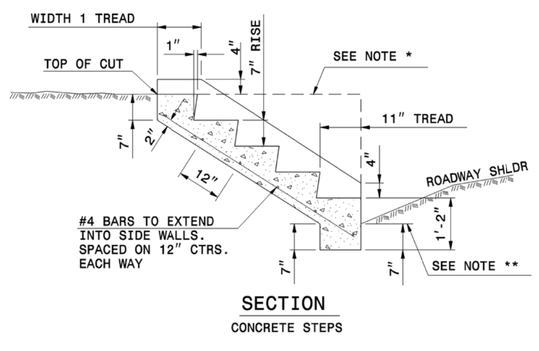

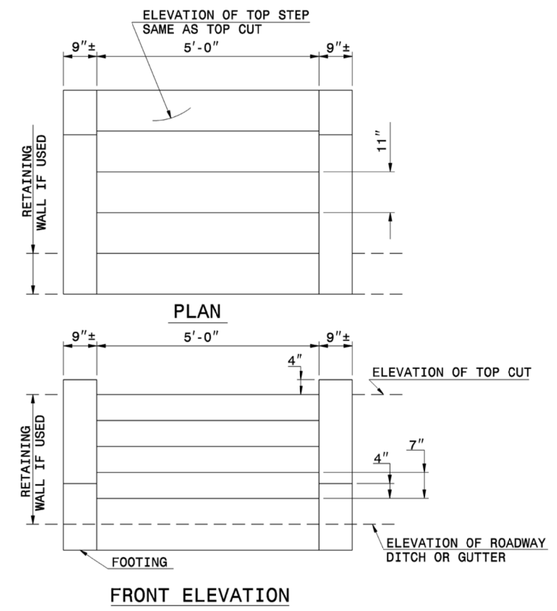

GENERAL NOTES:

USE CLASS "B" CONCRETE THROUGHOUT FOR CONCRETE STEPS.

LOCATIONS AND QUANTITIES SHOWN ARE APPROXIMATE ONLY. EXACT LOCATIONS AND QUANTITIES WILL BE DETERMINED BY THE ENGINEER.

* WHERE STEPS ARE CONSTRUCTED THRU THE RETAINING WALLS, RAISE THE SIDE WALLS OF THE STEPS LEVEL WITH THE TOP OF THE RETAINING WALL. SEE DASHED LINES.

** WHERE SIDEWALKS ARE PROPOSED OR EXISTING, THIS IS TO BE THE TOP OF THE SIDEWALK.
USE UNCORED BRICK.

ENGLISH STANDARD DRAWING FOR
CONCRETE STEPS

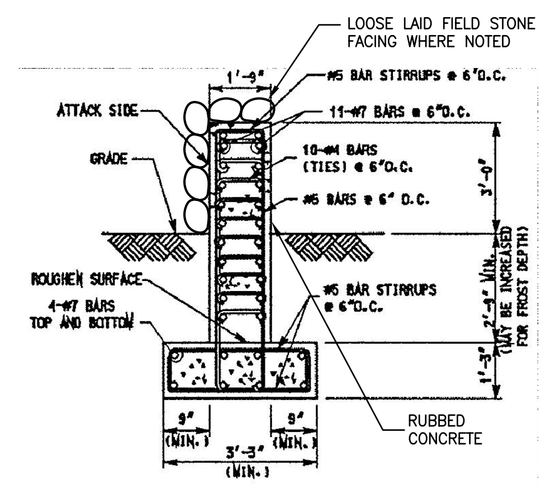

BARRIER RATING: CONDITION DESIGNATION K4

CONSTRUCTION: CAST-IN-PLACE HEAVILY REINFORCED CONCRETE RETAINING WALL WITH STIRRUPS

COMMENT: EFFECTIVE AGAINST AUTOMOBILES AND TRUCKS. BASE DIMENSIONS MUST BE CALCULATED BASED ON SOIL CONDITIONS AT THE SITE.

PB-1 BARRIER WALL
SCALE: NONE

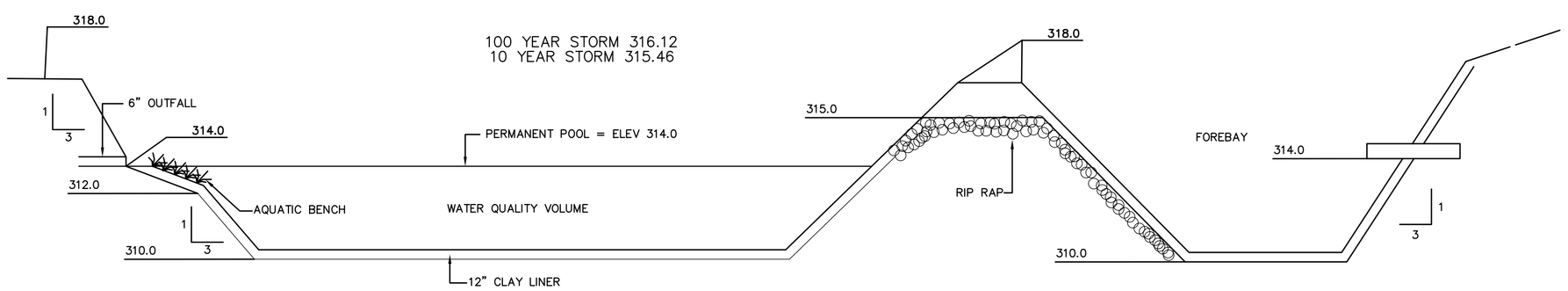

STORMWATER MANAGEMENT FACILITY

NTS

Figure 5A.13
Filter Fabric Drop Inlet Protection Details

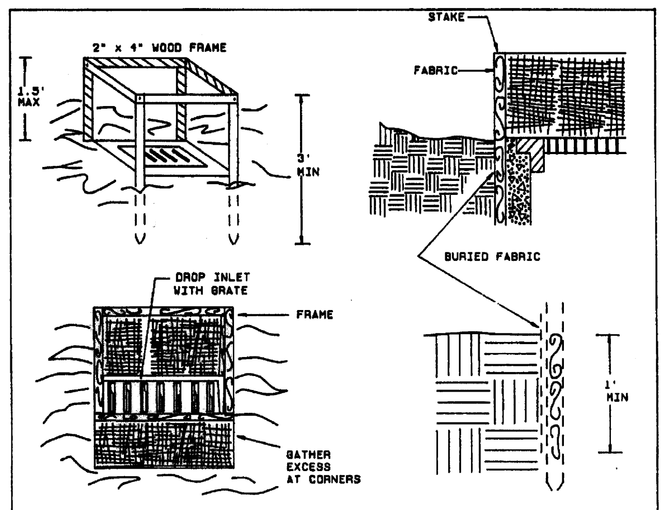

CONSTRUCTION SPECIFICATIONS

1. FILTER FABRIC SHALL HAVE AN EOS OF 40-85. BURLAP MAY BE USED FOR SHORT TERM APPLICATIONS.
2. CUT FABRIC FROM A CONTINUOUS ROLL TO ELIMINATE JOINTS. IF JOINTS ARE NEEDED THEY WILL BE OVERLAPPED TO THE NEXT STAKE.
3. STAKE MATERIALS WILL BE STANDARD 2" x 4" WOOD OR EQUIVALENT. METAL WITH A MINIMUM LENGTH OF 3 FEET.
4. SPACE STAKES EVENLY AROUND INLET 3 FEET APART AND DRIVE A MINIMUM 18 INCHES DEEP. SPANS GREATER THAN 3 FEET MAY BE BRIDGED WITH THE USE OF WIRE MESH BEHIND THE FILTER FABRIC FOR SUPPORT.
5. FABRIC SHALL BE EMBEDDED 1 FOOT MINIMUM BELOW GROUND AND BACKFILLED. IT SHALL BE SECURELY FASTENED TO THE STAKES AND FRAME.
6. A 2" x 4" WOOD FRAME SHALL BE COMPLETED AROUND THE CREST OF THE FABRIC FOR OVER FLOW STABILITY.

MAXIMUM DRAINAGE AREA 1 ACRE

U.S. DEPARTMENT OF AGRICULTURE NATURAL RESOURCES CONSERVATION SERVICE SYRACUSE, NEW YORK	FILTER FABRIC DROP INLET PROTECTION	STANDARD SYMBOL

US Army Corps of Engineers
Norfolk District

REV.	DATE	DESCRIPTION	BY	APP.

DESIGNED: JS | CHECKED: DMW | DATE: 16-AUGUST-04
DRAWN: JS | SUBMITTED: DMW | SCALE: NTS
PROJECT NO. 031120 | NORFOLK DISTRICT FILE NO. | SPECIFICATION NO. | DRAWING NO. | Plot scale: 1:1
Last worked on: | File name:

NORFOLK DISTRICT
CORPS OF ENGINEERS
NORFOLK, VIRGINIA

CITY OF NEW YORK
DEPT. OF ENVIRONMENTAL PROTECTION
EAST OF HUDSON ADMINISTRATION BLDG.
TOWN OF MOUNT PLEASANT

DETAILS AND GENERAL NOTES

C-501
SHEET OF

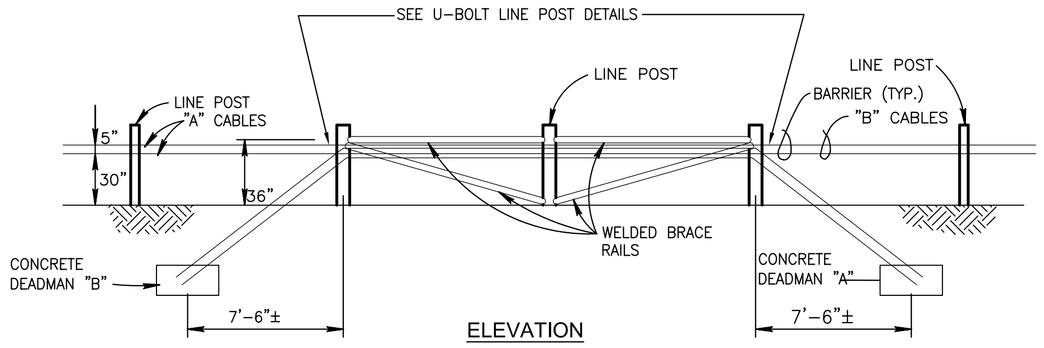

ELEVATION

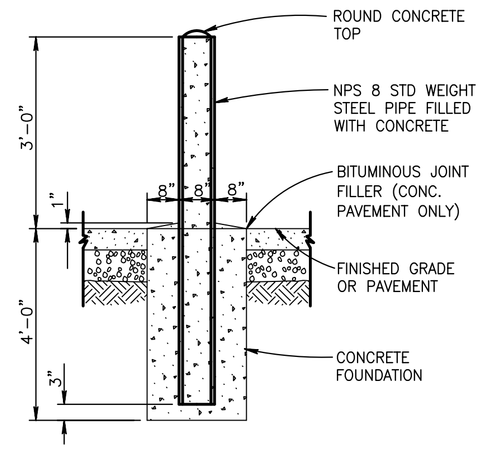

PIPE BOLLARD DETAIL

NO SCALE

NOTES:

NOTE:
STEEL PIPE FOR PIPE GUARDS SHALL CONFORM TO ASTM A53, TYPE E OR S, GALVANIZED, MINIMUM WALL THICKNESS 0.322 INCHES.

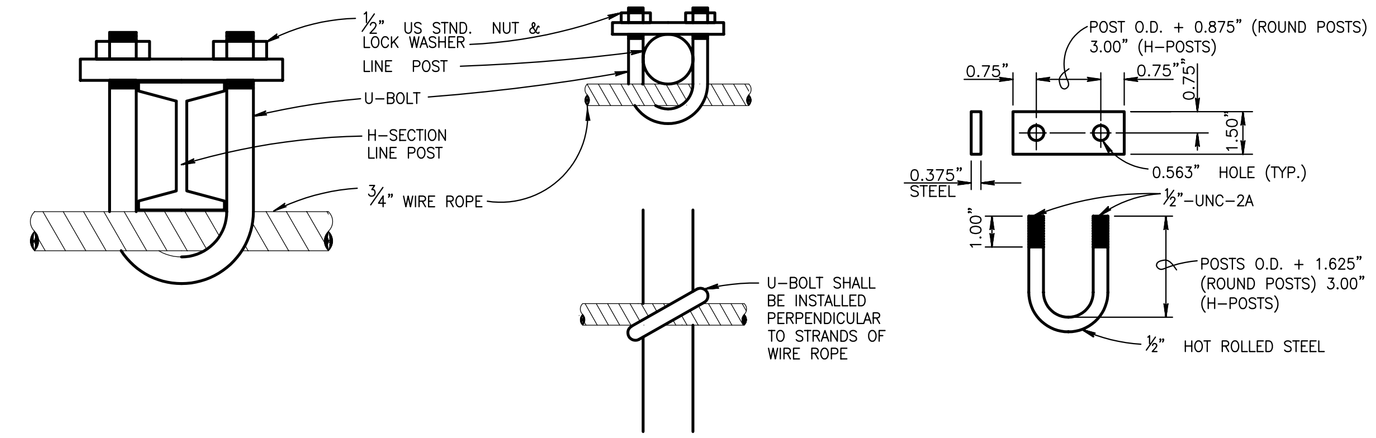

U-BOLT AT LINE POST DETAILS

NO SCALE

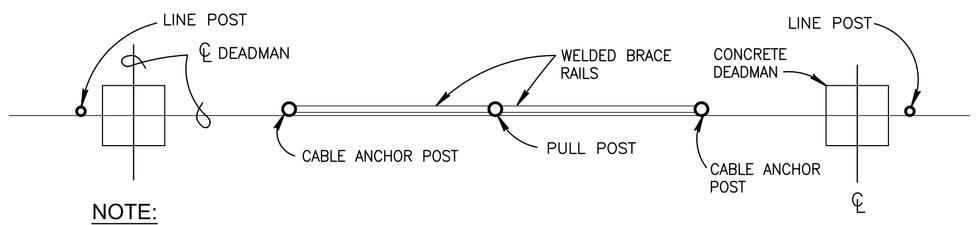

NOTE:
CABLE "A" & "B" DESIGNATION IS FOR CLARIFICATION OF ROUTING OF CABLES.

BRACE PANEL W/ DEADMEN DETAIL (AT STRAIGHT RUN 200 FT. INTERVALS)

NO SCALE

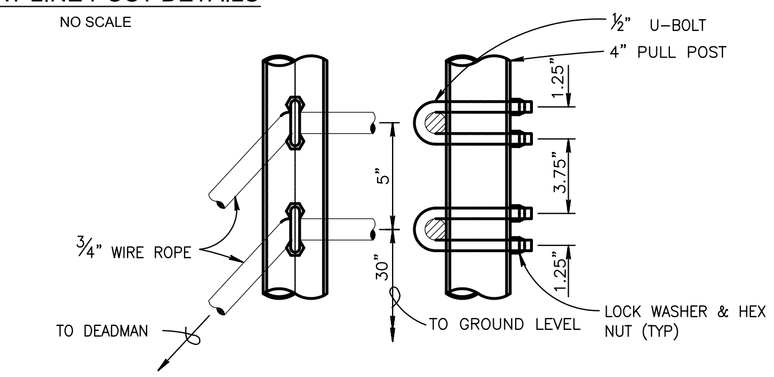

U-BOLT AT CABLE ANCHOR POST DETAIL (OPTIONAL DETAIL)

NO SCALE

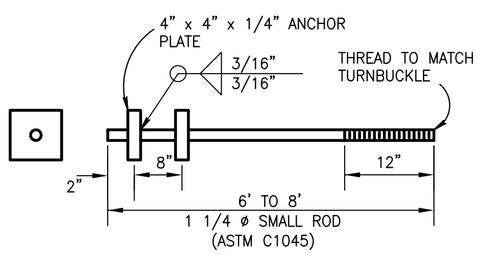

NOTE:

1. HOT DIP GALVANIZE ANCHOR BOLT AND ANCHOR PLATE AFTER FABRICATION. AS AN OPTION AND TO EXPEDITE DELIVERY, OMIT GALVANIZING AND PAINT WITH ZINC RICH PAINT.

DEADMAN ANCHOR BOLT

NO SCALE

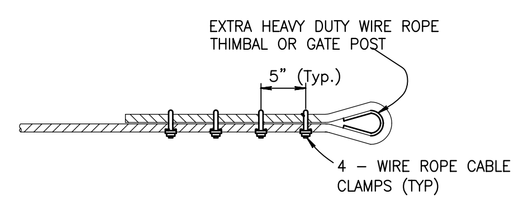

DETAIL C
WIRE ROPE CLAMP DETAIL

NO SCALE

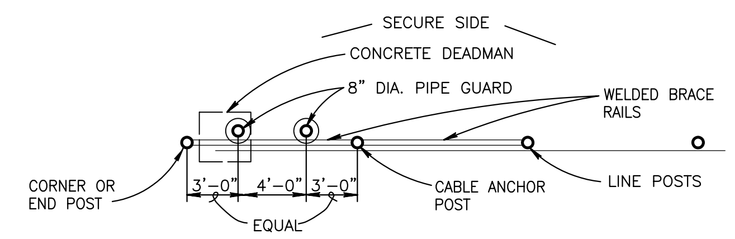

PLAN

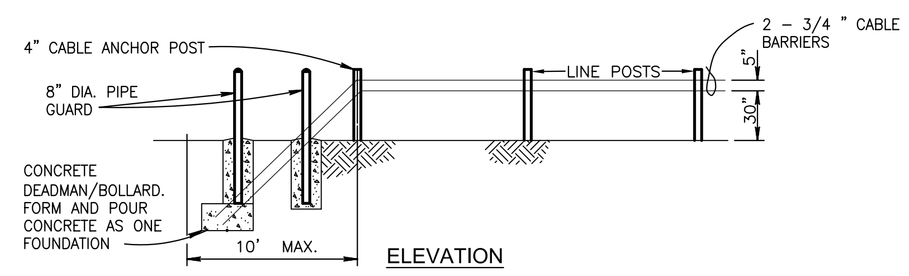

ELEVATION

NOTE:
PIPE GUARD FOUNDATION AND CONCRETE DEADMAN MAY BE PLACED AS ONE CONCRETE FOUNDATION.

CORNER OR END DETAIL WITH DEADMAN

NO SCALE

NOTES:

1. CABLES SHALL BE CONTINOUS FROM DEADMAN TO DEADMAN. NO SPLICES IN CABLE SHALL BE ALLOWED. CABLE BARRIER SHALL BE INSTALLED BETWEEN FENCE POSTS AND FENCE FABRIC AS PER PLANS. U-BOLTS SHALL BE INSTALLED PERPENDICULAR TO THE LAY OR THE STRANDS OF THE WIRE ROPE AND SHALL BE TIGHTENED AFTER SAG IN CABLE BARRIER HAS BEEN REMOVED. CONCRETE DEADMAN SPACING SHALL BE AT 200 FEET INTERVALS.

2. CABLE BARRIER SHALL BE U.S. DOMESTIC ¾ INCH 6x19 CLASS WIRE ROPE, REGULAR LAY, EXTRA IMPROVED PLOW STEEL (EIPS), INDEPENDENT WIRE ROPE CORE, (IWRC), CLASS A GALVANIZED, IN ACCORDANCE WITH ASTM A475.

3. TURNBUCKLES SHALL BE 1¼" X 18", TYPE I, GALVANIZED, IN ACCORDANCE WITH ASTM F1145.

4. WIRE ROPE CLAMPS SHALL BE TYPE I, GALVANIZED, IN ACCORDANCE WITH FS FF-C-450.

5. U-BOLTS SHALL BE ½ INCH U-BOLTS AND HEX NUTS, GALVANIZED, IN ACCORDANCE WITH ASTM A307.

6. THREADED RODS SHALL BE 1¼ INCH GALVANIZED, IN ACCORDANCE WITH ASTM A307 OR A36.

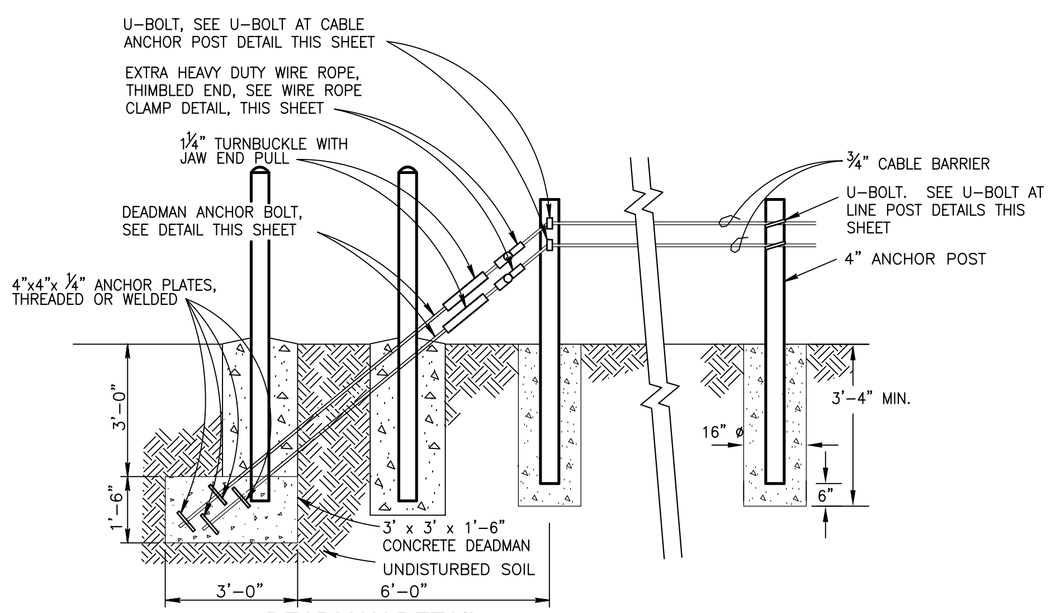

DEADMAN DETAIL

NO SCALE

STEEL POST SCHEDULE			
USE AND SECTION	MINIMUM OUTSIDE DIMENSIONS (NOMINAL)		
	FABRIC WIDTH 72" OR LESS	FABRIC WIDTH 84" TO 96"	FABRIC WIDTH 108" AND OVER
CORNER, END & PULL POSTS			
TUBULAR – ROUND	2.375" O.D.	2.875" O.D.	4.00" O.D.
TUBULAR – SQUARE	2.00" SQ.	2.50" SQ.	3.00" SQ.
C-SECTION (ROLL-FORMED)	3.50" X 3.50"	3.50" X 3.50"	———
LINE POSTS			
TUBULAR – ROUND	1.90" O.D.	2.375" O.D.	2.875" O.D.
H-SECTION	2.25" X 1.70"	2.25" X 1.70"	2.25" X 1.70"
C-SECTION (ROLL-FORMED)	1.875" X 1.625"	2.25" X 1.70"	———
TOP, BOTTOM & BRACE RAILS			
TUBULAR – ROUND	1.66" O.D.		
TUBULAR – SQUARE	1.50" O.D.		
H-SECTION	1.625" X 1.50"		
C-SECTION (ROLL-FORMED)	1.625" X 1.25"		

US Army Corps of Engineers Norfolk District

REV.	DATE	DESCRIPTION	BY	APP.

DESIGNED: JS | DRAWN: JS | CHECKED: DMW | SUBMITTED: DMW | DATE: 16-AUGUST-04 | SCALE: NTS | NORFOLK DISTRICT FILE NO. | PROJECT NO. 031120 | SPECIFICATION NO. | DRAWING NO. | Last revised on: | File name: | Plot scale: 1:1

NORFOLK DISTRICT
CORPS OF ENGINEERS
NORFOLK, VIRGINIA

CITY OF NEW YORK
DEPT. OF ENVIRONMENTAL PROTECTION
EAST OF HUDSON ADMINISTRATION BLDG.
TOWN OF MOUNT PLEASANT

DETAILS AND GENERAL NOTES

C-502
SHEET OF

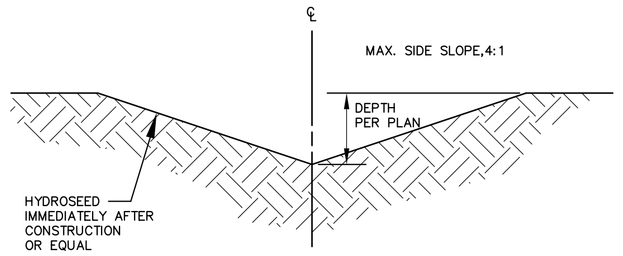

GRASS SWALE

NTS

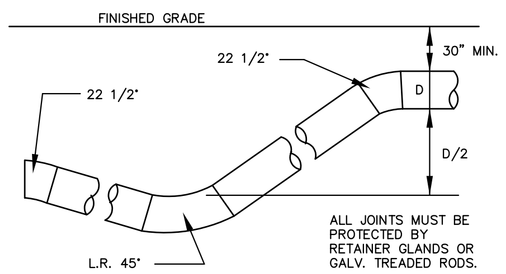

FORCE MAIN SAXOPHONE

NTS

Figure 6.16 Underground Sand Filter (F-2)

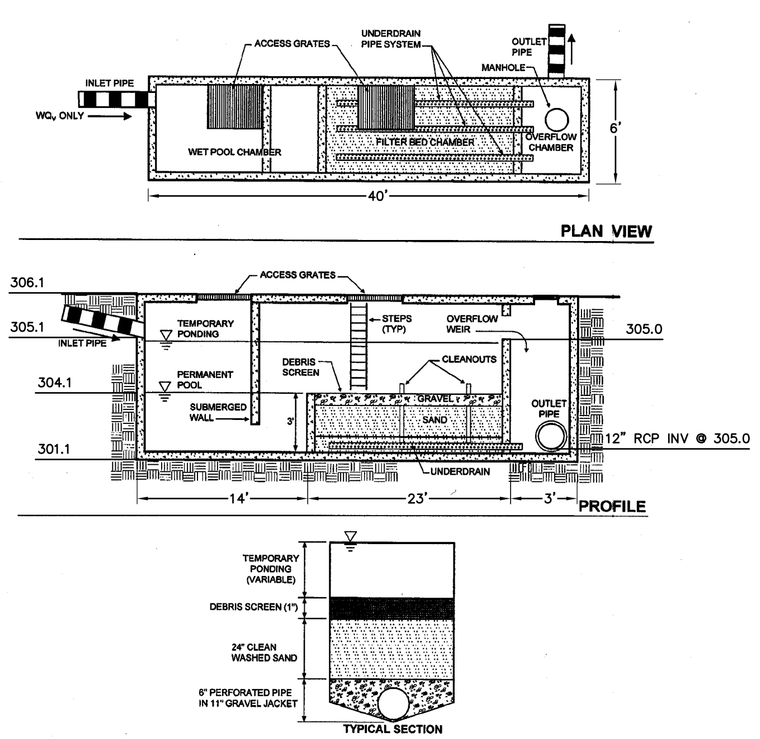

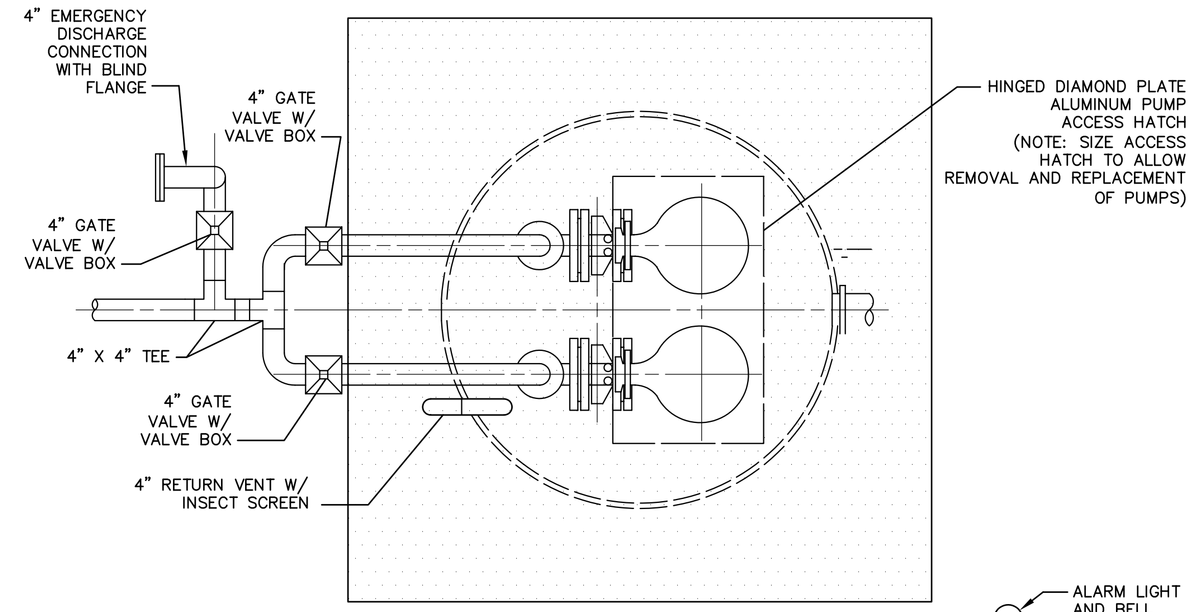

PLAN

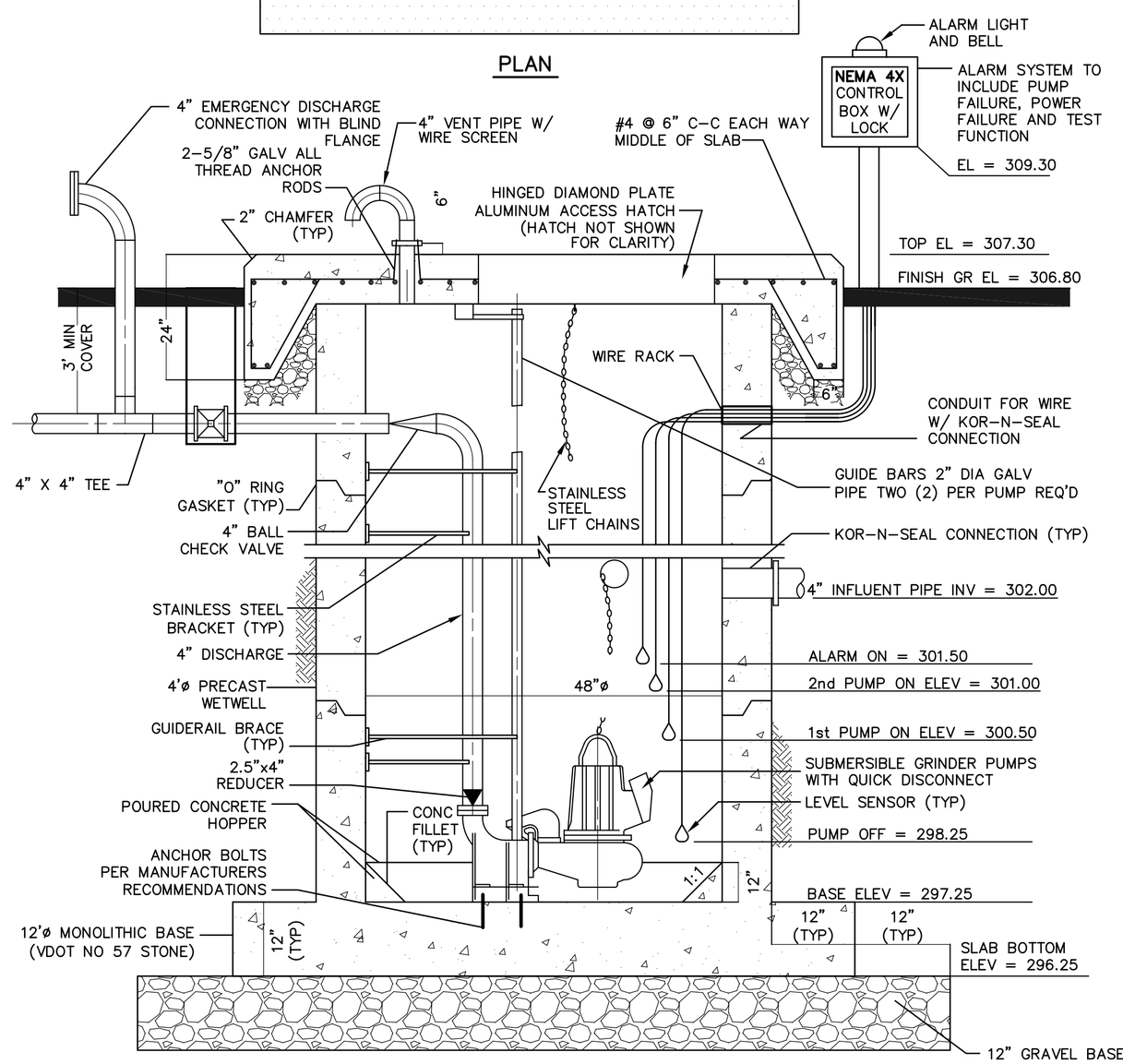

ALL INTERIOR & EXTERIOR WET WELL SURFACES TO BE COATED WITH TWO COATS KOPPERS BITUMASTIC 300-M OR APPROVED EQUAL

ALL MISCELLANEOUS HARDWARE IN WET WELL TO BE STAINLESS STEEL

PUMPS
TO BE DETERMINED

PUMP CONTROL SYSTEM

PROVIDE A FLOAT SWITCH CONTROL SYSTEM. DESIGN TO START PUMP AT INDICATED HIGH WATER AND STOP AT INDICATED LOW WATER. AUTOMATICALLY ALTERNATE OPERATION FROM ONE PUMP TO THE OTHER AND START SECOND PUMP IN THE EVENT FIRST PUMP CANNOT HANDLE INCOMING FLOW. PROVIDE MANUAL "ON-OFF" SWITCH FOR EACH PUMP. PROVIDE INDEPENDENT ADJUSTABLE HIGH AND LOW WATER LEVEL SWITCHES. PROVIDE HIGH WET WELL ALARM SWITCH.

SECTION

GRINDER PUMP STATION

NTS

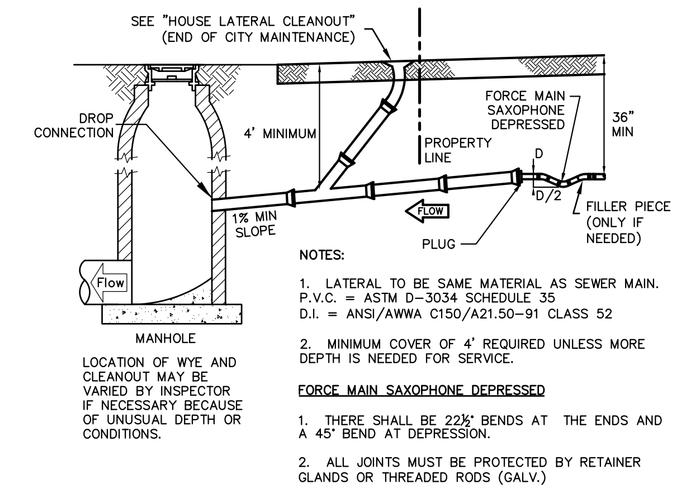

NOTES:

1. LATERAL TO BE SAME MATERIAL AS SEWER MAIN.
P.V.C. = ASTM D-3034 SCHEDULE 35
D.I. = ANSI/AWWA C150/A21.50-91 CLASS 52

2. MINIMUM COVER OF 4' REQUIRED UNLESS MORE DEPTH IS NEEDED FOR SERVICE.

FORCE MAIN SAXOPHONE DEPRESSED

1. THERE SHALL BE 22½° BENDS AT THE ENDS AND A 45° BEND AT DEPRESSION.

2. ALL JOINTS MUST BE PROTECTED BY RETAINER GLANDS OR THREADED RODS (GALV.)

LATERAL LAYOUT W/FORCE MAIN SAXOPHONE DEPRESSED

NTS

New York State Stormwater Management Design Manual — Chapter 6: Filtering Systems

Figure 6.19 Bioretention (F-5)

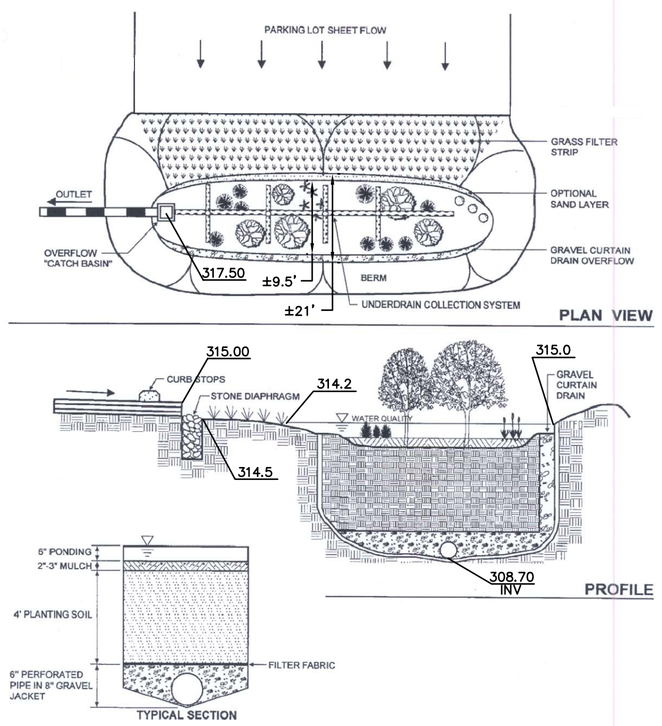

6-49

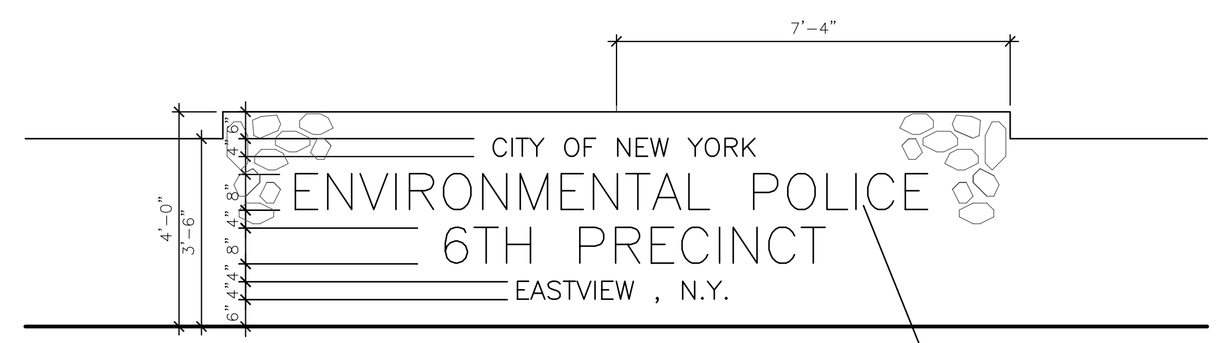

ELEVATION @ ENTRANCE SIGN

SCALE: N.T.S.

US Army Corps of Engineers
Norfolk District

REV.	DATE	DESCRIPTION	BY	APP.

DESIGNED: JS
CHECKED: DMW
DRAWN: JS
SUBMITTED: DMW
DATE: 16-AUGUST-04
SCALE: NTS
PROJECT NO. 031120
NORFOLK DISTRICT FILE NO.
DRAWING NO.
SPECIFICATION NO.
Last worked on:
File name:
Plot scale: 1:1

NORFOLK DISTRICT
CORPS OF ENGINEERS
NORFOLK, VIRGINIA

CITY OF NEW YORK
DEPT. OF ENVIRONMENTAL PROTECTION
EAST OF HUDSON ADMINISTRATION BLDG.
TOWN OF MOUNT PLEASANT

DETAILS AND GENERAL NOTES

C-503
SHEET OF

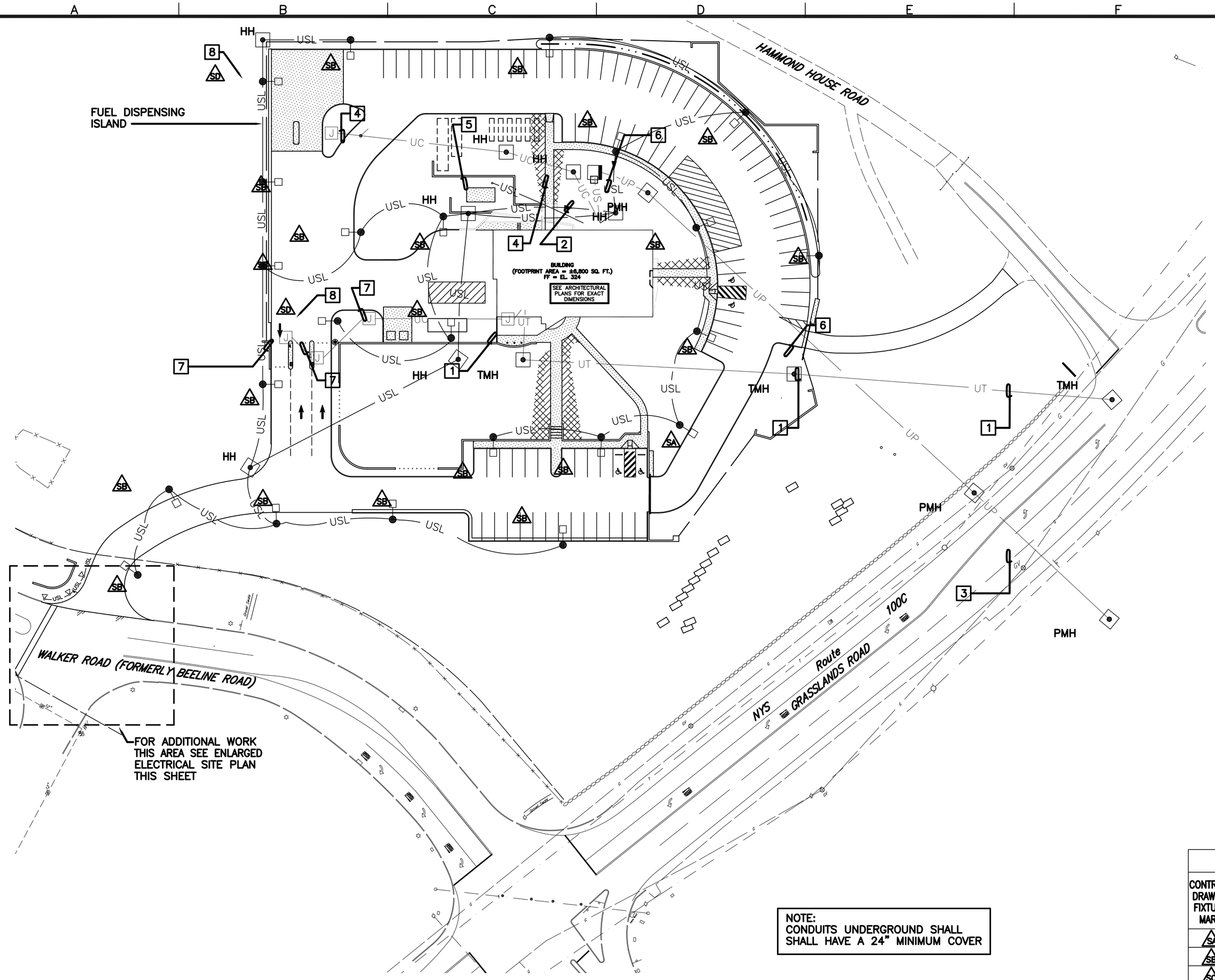

NOTE:
CONDUITS UNDERGROUND SHALL SHALL HAVE A 24" MINIMUM COVER

ELECTRICAL SITE PLAN

SCALE: 1" = 40'-0"

NOTES:

(THIS SHEET ONLY)

1. 3-4" PVC CONCRETE ENCASED DUCTS WITH 3 PULLWIRES EACH DUCT, MINIMUM 24" BELOW GRADE FOR UNDERGROUND TELEPHONE SERVICE. CONNECT UNDERGROUND DUCT TO EXISTING TELEPHONE COMPANY MANHOLE IN ACCORDANCE WITH TELEPHONE COMPANY REQUIREMENTS. CUT AND PATCH PAVEMENT AS REQUIRED. COORDINATE WITH LOCAL TELEPHONE COMPANY. STUB UP CONDUITS INTO COMMUNICATIONS ROOM. COORDINATE EXACT LOCATION WITH OWNER.
2. 6-4" PVC CONCRETE ENCASED DUCTS WITH PULLWIRE FOR SECONDARY ELECTRIC SERVICE. STUB INTO ELECTRIC ROOM AND PAD MOUNTED TRANSFORMER. COORDINATE STUB UPS WITH OWNER AND LOCAL POWER COMPANY.
3. 2-6" GALVANIZED RIGID STEEL DUCTS WITH PULLWIRE FOR POWER COMPANY PRIMARY CABLING. JACK AND BORE CONDUITS UNDER ROADS. COORDINATE WITH LOCAL POWER COMPANY.
4. 3-4" PVC CONCRETE ENCASED DUCTS WITH 3 PULLWIRES EACH DUCT, FOR EQUIPMENT CONNECTIONS.
5. 6-4" AND 1-2" PVC CONCRETE ENCASED DUCTS WITH PULLWIRE FOR EMERGENCY GENERATOR SERVICE. STUB INTO ELECTRIC ROOM AND GENERATOR PAD. COORDINATE STUB UPS WITH OWNER AND LOCAL POWER COMPANY.
6. 2-6" PVC CONCRETE ENCASED DUCTS WITH PULLWIRE.
7. 2-4" PVC DB CONDUITS WITH 3 PULLWIRES EACH DUCT, STUB UP INTO ELECTRIC ROOM AND GENERATOR PAD. COORDINATE WITH OWNER.
8. CCTV CAMERA LOCATION

ELECTRICAL LEGEND - EXTERIOR UNDERGROUND

SYMBOL	DESCRIPTION
	UNDERGROUND DUCTBANK, CONCRETE ENCASED UON. MINIMUM 24" BELOW GRADE. DESCRIPTION AS INDICATED.

TEXT KEY

- UC UNDERGROUND CONTROL/POWER
- UP UNDERGROUND PRIMARY
- UT UNDERGROUND TELEPHONE
- US UNDERGROUND SECONDARY

SYMBOL	DESCRIPTION
	PROPOSED LOCATION OF LOCAL POWER COMPANY PAD MOUNTED TRANSFORMER
HH	HANDHOLE TYPE 5 UON. P INDICATES POWER, T INDICATES COMMUNICATIONS. SEE DETAIL SHEET E-103
MH	MANHOLE. P INDICATES POWER, T INDICATES COMMUNICATIONS. SEE DETAIL SHEET E-103
	AREA LIGHTING POLE WITH LUMINAIRE(S)
USL	UNDERGROUND SITE LIGHTING, 2#8, 1#10G. - 2"PVC DB, UON
J	HANDHOLE TYPE 3, UON
	CONDUIT SEAL OFF

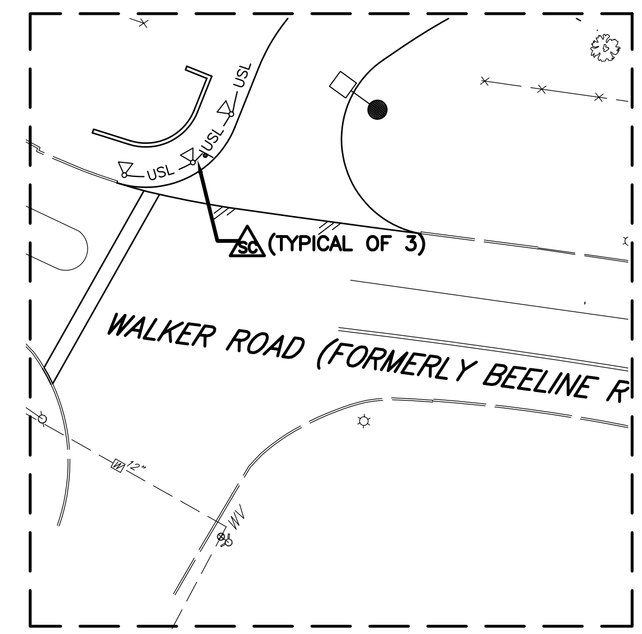

ELECTRICAL ENLARGED SITE PLAN

SCALE: 1" = 20'-0"

LIGHTING FIXTURE SCHEDULE

CONTRACT DRAWING FIXTURE MARK	TYPE	LAMP			FIXTURE VOLTAGE	ZONAL CAVITY METHOD RCR=1				SPACING TO MTG. HTG. RATIO	NOTE NO.	MOUNTING
						EFFECTIVE REFLECTANCE			COEF. OF UTIL.			
		TYPE	NO.	WATTS		CLG.	WALL	FLOOR				
SA	KSF2 250S R3	HPS	1	250	480	-	-	-	-	-	1,2,4	POLE
SB	KSF2 250S R4	HPS	1	250	480	-	-	-	-	-	1,3,4	POLE
SC	SEE DETAIL	MH	1	250	120	-	-	-	-	-		GRADE
SD	KSF2 250M R4	HPS	1	250	480	-	-	-	-	-	1,3,4	POLE

NOTES:

1. POLE MOUNT ON 25 FOOT ROUND ALUMINUM POLE. MOUNT POLE ON CONCRETE BASE.
2. TYPE III DISTRIBUTION
3. TYPE IV FORWARD THROW DISTRIBUTION.
4. PROVIDE QUANTITY OF FIXTURES PER POLE AS GRAPHICALLY INDICATED.
5. COORDINATE EXACT LOCATION WITH CONTRACTING OFFICER.

GRAPHIC SCALES

1" = 20' 20' 10' 0 10' 20' 30' 40' 60'

1" = 40' 40' 20' 0 20' 40' 80' 120'

US Army Corps of Engineers
Norfolk District

REV.	DATE	DESCRIPTION	BY	APP.

DESIGNED: GDA
DRAWN: SCW
CHECKED: GDA
SUBMITTED:
DATE: AUGUST-04
SCALE: AS SHOWN
NORFOLK DISTRICT FILE NO.
PROJECT NO. PN 33075
SPECIFICATION NO.
DRAWING NO.
Last revised on:
File name: 0317E101ES401XXX
Plot scale: 1:1

NORFOLK DISTRICT
CORPS OF ENGINEERS
NORFOLK, VIRGINIA

CITY OF NEW YORK
DEPT. OF ENVIRONMENTAL PROTECTION
EAST OF HUDSON ADMINISTRATION BLDG.
TOWN OF MOUNT PLEASANT

ELECTRICAL SITE PLAN

E-101
SHEET OF

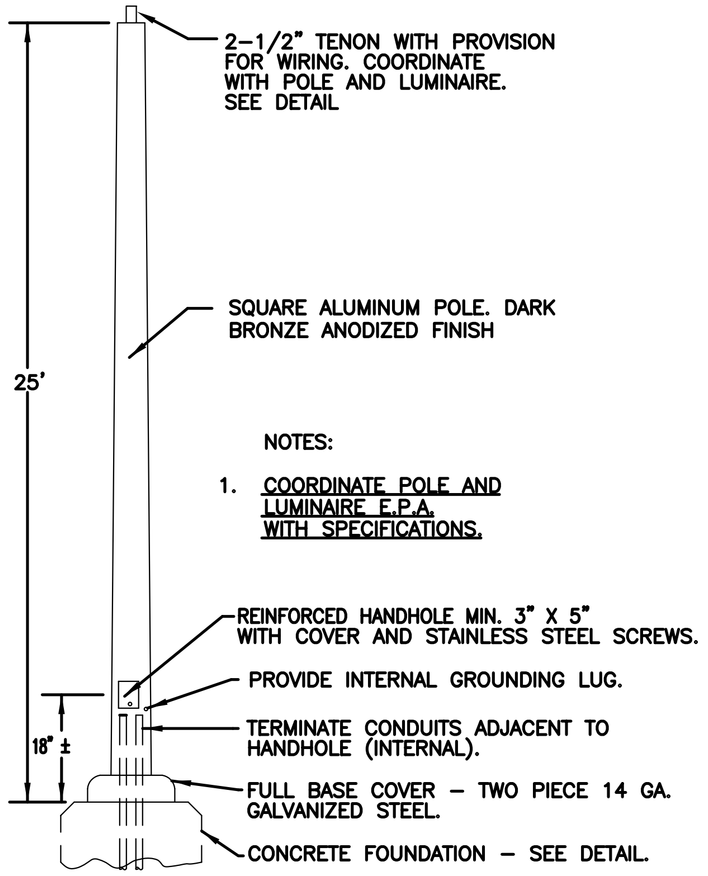

NOTES:

1. COORDINATE POLE AND LUMINAIRE E.P.A. WITH SPECIFICATIONS.

ALUMINUM POLE, ANCHOR BASE, TENON MOUNT

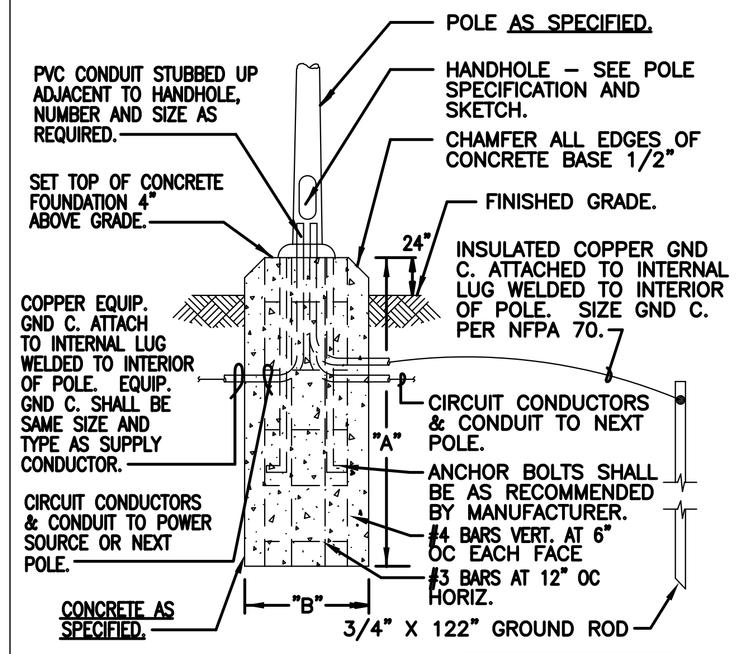

POLE HT.	A	B
8' –12'	60"	12"
13' – 20'	66"	16"
21' – 30'	96"	24"
31' – 40'	102"	30"

LEGEND

GND C. – GROUNDING CONDUCTOR

BOLT–DOWN POLE FOUNDATION

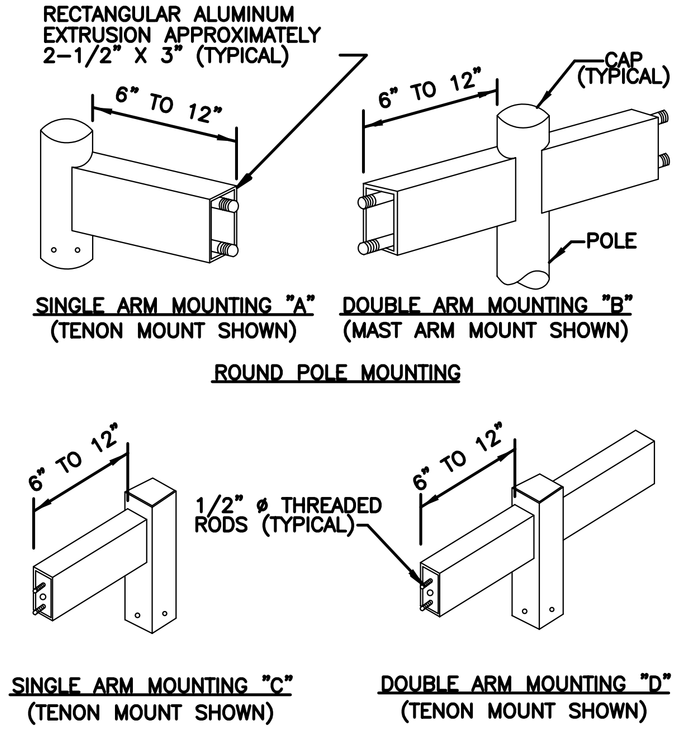

NOTES:
1. ALL FASTENERS SHALL BE CONCEALED.
2. ALL ARMS ARE AVAILABLE IN TENON OR MAST ARM MOUNT, SPECIFY TYPE DESIRED.

LUMINAIRE MOUNTING ARMS

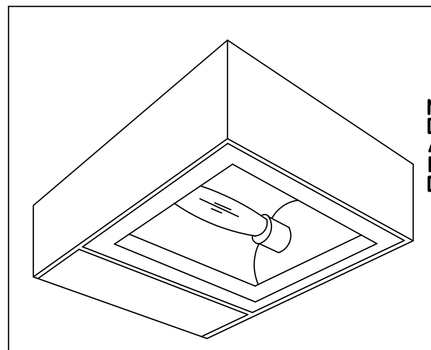

NOTE:
DISTRIBUTION SHALL BE AS INDICATED AND SHALL BE IN ACCORDANCE WITH I.E.S. DEFINITIONS.

LUMINAIRE REQUIREMENTS

1. HOUSING, DIE CAST ALUMINUM OR EXTRUDED OR FORMED ALUMINUM, WITH SEALED AND WELDED SEAMS.
2. REFLECTOR – FORMED ANODIZED ALUMINUM.
3. LENS – TEMPERED, IMPACT RESISTANT CLEAR GLASS.
4. LENS DOOR – HINGED ALUMINUM WITH GASKET, CAPTIVE SCREW OR LATCHES.
5. INTEGRAL MULTI–TAP BALLAST.
6. CONCEALED MOUNTING HARDWARE (ALL HARDWARE CORROSION RESISTANT).
7. PORCELAIN SOCKET WITH VIBRATION–PROOF LAMP GRIP SHELL.
8. FINISH – DARK BRONZE, BAKED ENAMEL, OR POLYESTER POWDER FINISH.
9. SLIPFITTER 2–1/2" TO 3" O.D. OR MOUNTING ARM.
10. LAMP – 70 TO 1000 WATT, BULB AND WATTAGE AS INDICATED.
11. LAMP STABILIZER, 1000 WATT SIZE ONLY.
12. UL LISTED – SUITABLE FOR OUTDOOR WET LOCATION.
13. "HOUSE SIDE OR REAR SPILL" LIGHT SHALL BE LIMITED TO 20%.

MAX. E.P.A. 0.2787 SQ. M.

ROADWAY AND AREA LIGHT

TYPE SA SB SD

GNDFLOODLT.dwg

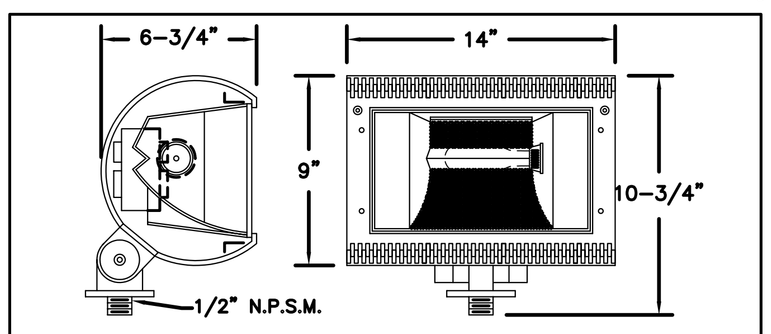

LUMINAIRE REQUIREMENTS

1. HOUSING – DIE CAST ALUMINUM OR FORMED AND SEAM WELDED ALUMINUM, WITH BAKED ENAMEL OR POLYESTER POWDER FINISH.
2. REFLECTOR – SPECULAR ALUMINUM.
3. DOOR – GASKET AND CAPTIVE SCREWS OR CAM LATCH FASTENERS.
4. INTEGRAL MULTI–TAP BALLAST.
5. STAINLESS STEEL OR NONCORROSIVE HARDWARE.
6. PORCELAIN SOCKET WITH VIBRATION–PROOF LAMP GRIP SHELL.
7. PROVIDE 12"x12"x12" DEEP CONCRETE BASE
8. PHOTOCELL WHEN SPECIFIED.
9. LAMP – 70–TO 1000–WATT – TYPE AND WATTAGE AS SPECIFIED.
10. NOT USED
11. LENS – TEMPERED, IMPACT RESISTANT, CLEAR GLASS.
12. UL LISTED – SUITABLE FOR OUTDOOR WET LOCATIONS.
13. HOUSING COLOR SHALL BE DARK BRONZE UNLESS SPECIFIED OTHERWISE.

GROUND MOUNTED FLOOD LIGHT DETAIL

NO SCALE

Allsbrook Goodman, Inc.
Consulting Engineers (757) 497-3222
201 E. Bayville Blvd Suite 11 Virginia Beach, VA 23451

STANDARD DETAILS
November 1998

© Allsbrook Goodman, Inc., Electrical Details

TYPE SG

US Army Corps of Engineers
Norfolk District

REV.	DATE	DESCRIPTION	BY	APP.

DESIGNED: GDA
DRAWN: SCW
CHECKED: GDA
SUBMITTED:
DATE: 15-AUGUST-04
SCALE: AS SHOWN
PROJECT NO. PN 33075
NORFOLK DISTRICT FILE NO.
DRAWING NO.
SPECIFICATION NO.
Last revised on:
File name: 0317E103ES501
Plot scale: 1:1

NORFOLK DISTRICT
CORPS OF ENGINEERS
NORFOLK, VIRGINIA

CITY OF NEW YORK
DEPT. OF ENVIRONMENTAL PROTECTION
EAST OF HUDSON ADMINISTRATION BLDG.
TOWN OF MOUNT PLEASANT

ELECTRICAL EXTERIOR DETAILS

E–102
SHEET OF

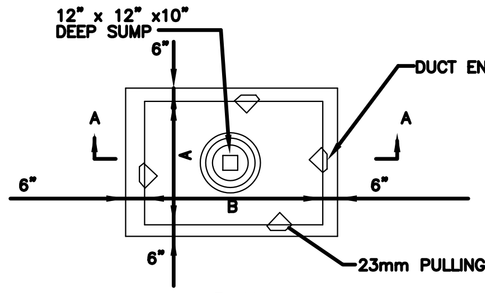

PLAN

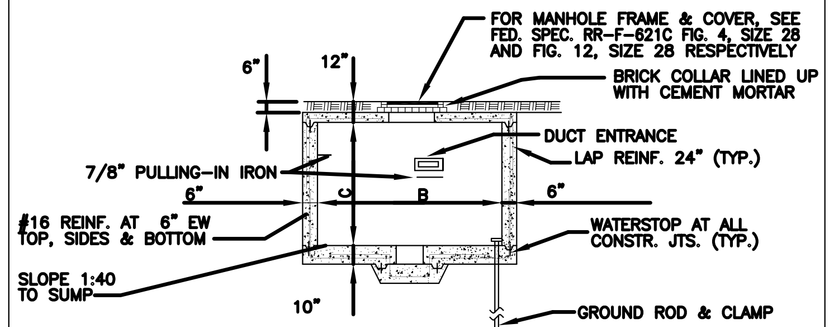

SECTION A-A

NOTES:

1. FOR DETAILS OF CABLE RACKS, DUCT ENTRANCE AND PULLING-IN IRONS, SEE PLATE UG-7.
2. MINIMUM CONCRETE COMPRESSIVE STRENGTH SHALL BE 20685 kPa.

MANHOLE DIMENSIONS			
TYPE	A	B	C (AT HIGH PT.)
1	72"	72"	78"
2	96"	96"	78"

STANDARD ELECTRICAL MANHOLE (NONTRAFFIC)
TYPES 1 & 2

SKETCH DATE FEBRUARY 1996 STYLE UG-1

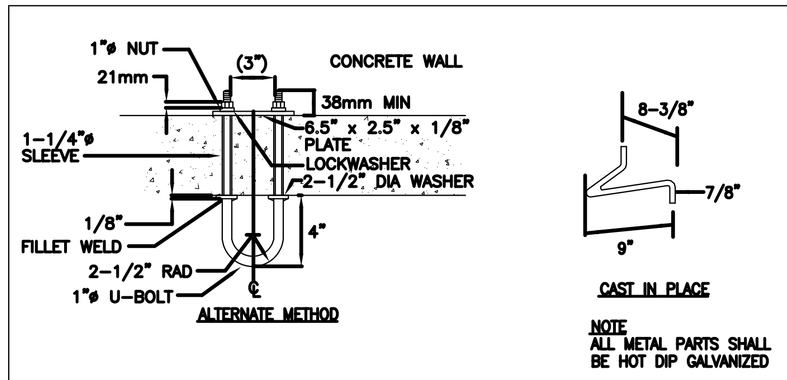

DETAIL OF PULLING-IN IRON

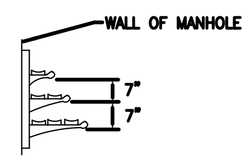

TYPICAL CABLE RACK

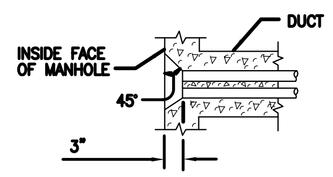

TYPICAL DUCT ENTRANCE

DETAILS
(PULLING-IN IRONS, CABLE RACK AND DUCT ENTRANCE)

SKETCH DATE FEBRUARY 1996 STYLE UG-7

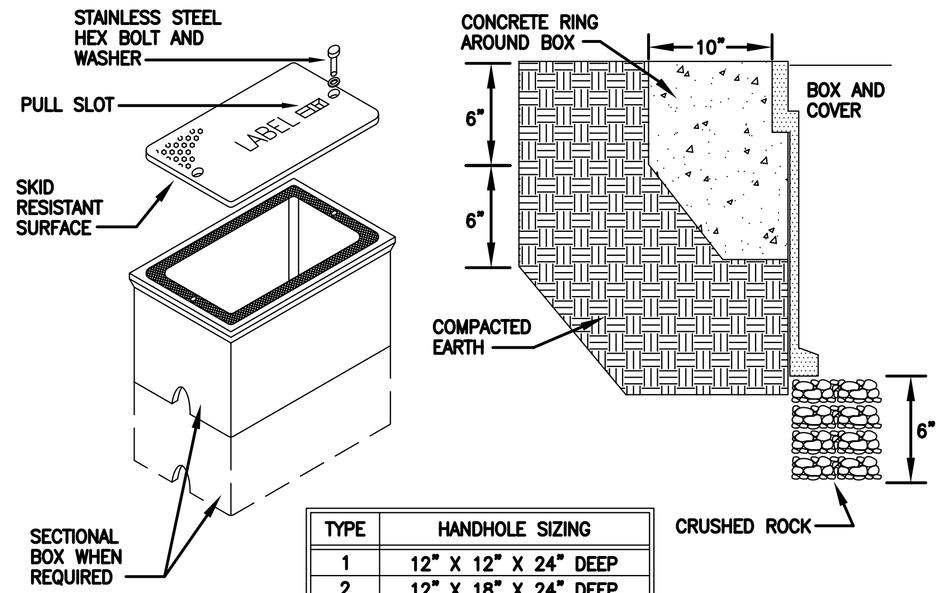

TYPE	HANDHOLE SIZING
1	12" X 12" X 24" DEEP
2	12" X 18" X 24" DEEP
3	12" X 24" X 24" DEEP
4	24" X 36" X 24" DEEP
5	30" X 48" X 24" DEEP

HANDHOLE REQUIREMENTS

1. HOUSING SHALL BE A POLYMER CONCRETE REINFORCED WITH A HEAVY WEAVE FIBERGLASS REINFORCING WITH COMPRESSIVE STRENGTH OF NO LESS THAN 10,000 PSI.
2. COVER SHALL WITHSTAND A SERVICE LOAD OF NO LESS THAN 15,000 LBS OVER A 10" x 10" AREA FOR HEAVY DUTY, H20 LOADING.
3. PROVIDE STAINLESS STEEL BOLTS AND INSERTS.
4. PROVIDE WITH (2) 2 1/2" MOUSEHOLES.
5. PROVIDE LABEL "ELECTRICAL" FOR POWER HANDHOLES OR "TELEPHONE" FOR TELEPHONE HANDHOLES, OR AS INDICATED.

COMPOSITE/FIBERGLASS HANDHOLE

NO SCALE

US Army Corps of Engineers
Norfolk District

REV.	DATE	DESCRIPTION	BY	APP.

DESIGNED: GDA
DRAWN: SCW
CHECKED: GDA
SUBMITTED:
DATE: 07-AUGUST-04
SCALE: AS SHOWN
NORFOLK DISTRICT FILE NO.
PROJECT NO. PN 33075
SPECIFICATION NO.
DRAWING NO.
Last worked on:
File name: 0317E104ES02
Plot scale: 1:1

NORFOLK DISTRICT
CORPS OF ENGINEERS
NORFOLK, VIRGINIA

CITY OF NEW YORK
DEPT. OF ENVIRONMENTAL PROTECTION
EAST OF HUDSON ADMINISTRATION BLDG.
TOWN OF MOUNT PLEASANT

ELECTRICAL EXTERIOR DETAILS

E-103
SHEET OF

Attachment 4 - Technical Specifications

Technical Specifications
Table of Contents

01005 – Project Work Requirements
01012 – Design After Award
01312 – Resident Management System
01320 – Project Schedules
01330 – Submittal Procedures
01331 – Contractor Warranty Management
01420 – Safety
01421 – Sources for Reference Publications
01451 – Contractor Quality Control
01452 – Testing for Mechanical and Electrical Systems
01560 – Environmental protection

02231 – Clearing and Grubbing
02300 – Earthwork
02315 – Excavation, Filling and Backfilling for Buildings
02316 – Excavation, Trenching, and Backfilling for Utilities Systems
02360 – Soil Treatment for Subterranean Termite Control
02370 – Soil Surface Erosion Control
02510 – Water Distribution system
02531 – Sanitary Sewers
02532 – Force Mains and Inverted Siphons; Sewer
02621 – Foundation Drainage System
02630 – Storm Drainage
02722 – Aggregate Base Coarse
02741 – Hot Mix Asphalt HMA for Roads
02754 – Concrete Pavements For Small Projects
02770 – Concrete Sidewalks and Curbs and Gutters
02921 – Seeding
02930 – Exterior Planting

11312 – Package Grinder Pump Lift Station
13216 – Underground Petrolium Tanks
15192 – Fuel Oil Piping
15193 – Gasoline/Diesel Dispensing Systems
16375 – Electrical Distribution System Underground
16528 – Exterior Lighting

SECTION 01005

PROJECT WORK REQUIREMENTS AND RESTRICTIONS (DESIGN BUILD)
10/03

PART 1 GENERAL

1.1 DEFINITIONS

a. Facilities: An Administration Building to be constructed for the New York City Department of Environmental Protection in New York State.

b. CO/COR: Contracting Officer or his/her authorized representative.

c. Technical Specifications: In the technical specifications issued with this solicitation, reference is made to “Government”, “Owner”, “NYCDEP”, “Engineer”, and “Architect”. These terms shall all reflect the Corps of Engineers Contracting Officer and his/her Designated Representative.

1.2 SPECIAL CONTRACTOR REQUIREMENTS

1.2.1 Performance period

The Contractor shall be required to phase the work such that the requirements shown in the Statement of Work are met. The performance period shown in the contract documents represents the total time available to the contractor for design and construction activities.

1.2.2 STRUCTURAL DRAWING DIMENSIONS

The building layout, including both horizontal and vertical dimensions, is shown on the Architectural sheets contained in the contract drawings. The Contractor shall use the dimensions from the Architectural sheets to obtain dimensions for foundation layout and structural members as necessary to prepare all shop drawings and fabricate structural members. There may be some instances where the Contractor shall have to adjust actual dimensions to the submitted items that he will use, to finalize the location of a structural member. Any such adjustments shall be clearly identified on the submitted shop drawings for Government review.

1.3 COOPERATION WITH USING AGENCY AND OTHER CONTRACTORS

During the period of this contract, other contracts may be in force for the construction of other features of work on or adjacent to the site of work being accomplished under this contract. It shall be the

responsibility of the Contractor on this contract to be fully informed of the extent of the limits of work to be performed by other Contractors. Should there be any conflict between these limits, it shall be brought to the attention of the Contracting Officer and the CO's decision shall be final. Also, prior to completion of work under this contract, members of the NYC DEP may be performing work or occupying facilities on or adjacent to the area. The Contractor shall arrange his plant and shall schedule and perform this work so as to effectively cooperate with all other Contractors and Government agencies.

1.4 PERSONNEL RESTRICTIONS

Personnel are limited to the immediate site area and shall not enter buildings or facilities not involved in the work. No car or personell shall use Hammond House Road as an entrance to the site or as a place to park. All employees of the Contractor will be subject to all New York City rules and regulations which pertain to personnel. The Contractor shall erect fences and signs as specified and be responsible for the restrictions
of all personnel. The Contractor's plans for restricting personnel access to the project site shall be submitted for approval as a part of the Safety Plan (Accident Prevention Plan).

1.5 TRANSPORTATION FACILITIES

The Facility is served by an all weather surfaced road network. Road(s) within the site proposed to be used by the Contractor shall be subject to prior approval of the NYC DEP authorities and such roads, if used, shall be maintained throughout construction and shall be restored to as good condition as existed prior to their use. Use of Hammond House Road as a site entrance or haul road is prohibited. The Contractor shall also construct, subject to approval, such temporary haul roads and bridges as may be necessary for conducting his work. Any such temporary construction shall be removed and the affected area restored to its original condition. All costs for the use of existing transportation facilities, for the construction of temporary facilities, and for maintenance, repair, removal and restoration shall be borne by the Contractor.

1.5.1 Use of Roads

The Contractor shall keep all roads clear of all obstructions and free of mud and other foreign materials resulting from operations. The Contractor's vehicles shall at no time follow a vehicle closer than 50 feet, and all vehicles shall pull off the road and come to a complete stop when meeting emergency vehicles, or vehicles with flashing lights. Facility speed limits and traffic controls shall be observed.

1.5.2 Road Restrictions

The movement of all vehicles within the site shall be confined to the roads designated and shall comply with traffic regulations of the locality and all New York City rules and regulations. Other roads may

be used only with the approval of the CO. Route 100C is restricted, at no time is 100C be used as a site entrance or haul route. Use of Hammond House Road is prohibited, at no time is Hammond House Road to be used for any purpose. All traffic shall enter the site thru the construction entrance indicated on Walker Road.

1.5.3 Cleated Vehicles

Cleated vehicles shall not be moved over surfaced roads except at the immediate site of the area where they are to be used.

1.5.4 Non-Road Vehicles

Nonroad Vehicles – Diesel-powered Nonroad Vehicles shall comply with Title 24 of the administrative code of the City of New York, Section 24-163.3 (enacted via Local Law 191-A on December 22, 2003) in relation to the use of ultra low sulfur diesel (ULSD) fuel and the best available technology for reducing the emission of pollutants. Notwithstanding the project site location and notwithstanding the effective dates of the Local Law, the Contractor shall comply with all technical requirements of the Local Law for the entire duration of the project. The effective dates for phased implementation stipulated in the Local Law shall not apply to this Contract.

1.6 COORDINATION IN WORK AREAS

1.6.1 Occupied Work Area

The areas adjacent to the sites where work is to be accomplished will be occupied during the work. Activities of the local residents shall not be interrupted or hampered in any way without prior written approval of the Contracting Officer.

1.6.2 Not Used.

1.6.3 Maintenance of Utilities

Any active utilities, including but not limited to electricity, gas, water, sewer, heating, air conditioning, or any like service, that will require interruption or replacement in any occupied area affected as a result of the Contractors scheduled work activities, shall be temporarily provided by the Contractor at his own expense until the affected service is fully and permanently restored. All temporary method(s) of service replacement the Contractor proposes for use on this contract shall be approved by the CO prior to commencing the work.

1.6.4 Hours of Work

See Section 00800, paragraph 47.

1.6.5 Digging Permits

Contractor is responsible for obtaining all digging permits, including associated locating and marking services, in accordance with local requirements, at no additional cost to the Government.

1.8 INTERRUPTIONS OF UTILITIES

1.8.1 Approval

Utility services shall not be interrupted by the Contractor to relocate, make connections, or interrupt for any purpose, without written approval of the CO.

1.8.2 Request

Request for permission to shut down services shall be submitted in writing to the CO not less than 10 calendar days prior to date of proposed interruption. The request shall give the following information:

a. Nature of Utility (Gas, L.P. or H.P., Water, Elec.)

b. Size of line and location of shutoff.

c. Buildings and services affected.

d. Hours and date of shutoff.

e. Estimated length of time service will be interrupted.

1.8.3 Service Interruptions

Services shall not be shut off until receipt of approval of the proposed hours and date from the Contracting Officer and the local utility company.

1.8.4 Timely Disconnections

Shutoffs which will cause interruption of Government work operations as determined by the Contracting Officer shall be accomplished during regular non-work hours or non-work days of the NYC DEP without any additional cost to the Government.

1.8.5 Utilities Operation

Operation of valves on water mains will be by personnel from the local water utility operation. Where shutoff of water lines interrupts service to fire hydrants or fire sprinkler systems, the local Fire Department shall be notified by the Contractor in writing 72 hours prior to the proposed interruption. The Contractor shall arrange his

operations and have sufficient material and personnel available to complete the work without undue delay and shall restore service without delay in event of emergency.

1.8.6 Gas

Flow in gas mains which have been shut off shall not be restored until the local gas utility company representative has determined that all items serviced by the gas line have been shut off.

1.9 PHYSICAL DATA

The physical conditions indicated on the drawings and in the specifications are the result of site visits, and surveys and borings. See Section 01055 SOIL BORING DATA for boring logs and data.

1.10 Schedule

The monthly anticipated adverse weather delays are based on National Oceanic and Atmospheric Administration (NOAA) or similar data for the project location and will constitute the base line for monthly weather time evaluations. The Contractor's progress schedule must reflect these anticipated adverse weather delays in all weather dependent activities. Refer to Section 00800 for days.

1.10.2 Records

Upon acknowledgement of the Notice to Proceed and continuing throughout the contract, the Contractor will record on the daily CQC report, the occurrence of adverse weather, actual Critical Activities (CA) & scheduled (CA) for that day, and resultant impact that work including (CA)’s actually delayed. Actual adverse weather delay days must prevent work on critical activities for 50 percent or more of the Contractor's scheduled work day.

1.10.3 Impacted Days

The number of actual adverse weather days shall include days impacted by actual adverse weather (even if adverse weather occurred in previous month), be calculated chronologically from the first to the last day in each month, and be recorded as full days. If the number of actual adverse weather delay days exceeds the number of days anticipated in the schedule of monthly anticipated adverse weather delays, above, the contracting officer will convert any qualifying delays to calendar days, giving full consideration for equivalent fair weather work days, and issue a modification in accordance with the Contract Clauses entitled "Default (Fixed Price Construction)".

1.11 IDENTIFICATION OF GOVERNMENT-FURNISHED PROPERTY

There will be no Government furnished property on this contract.

1.12 SITE CONTAMINATION

This site is designated a Category I site and is defined as a site that is located in a traditional non-hazardous location, such as in an administrative, recreation, or housing area and that the Government has no reason to suspect contamination.

1.12.1 Contamination Removal

In the event that contamination beyond that shown or specified is encountered, the Contracting Officer shall be advised immediately. The contamination shall be removed as directed and replaced with satisfactory material. Payment therefore will be made in conformance with the CHANGES clause of the CONTRACT CLAUSES.

1.12.2 Compliance Requirements

The Contractor shall comply with applicable Federal, state and local laws, codes, ordinances and regulations (including the obtaining of licenses and permits) in connection with any hazardous material, substance or waste.

1.12.3 Requirements

The requirements of this clause and any act or failure to act by the Government shall not relieve the Contractor of any responsibility or liability for the safety of Government, Contractor or subcontractor personnel or property.

1.13 NOT USED

1.14 NOT USED

1.15 EQUIPMENT OWNERSHIP AND OPERATING EXPENSE SCHEDULE

1.15.1 Allowable Costs

Allowable cost for construction and marine plant and equipment in sound workable condition owned or controlled and furnished by a Contractor or subcontractor at any tier shall be based on actual cost data when the Government can determine both ownership and operating costs for each piece of equipment or equipment groups of similar serial and series from the Contractor's accounting records. When both ownership and operating costs cannot be determined from the Contractor's accounting records, equipment costs shall be based upon the applicable provisions of EP 1110-1-8, "Construction Equipment Ownership and Operating Expense Schedule," Region I. Working conditions shall be considered to be average for determining equipment

rates using the schedule unless specified otherwise by the Contracting Officer. For equipment not included in the schedule, rates for comparable pieces of equipment may be used or a rate may be developed using the formula provided in the schedule. For forward pricing, the schedule in effect at the time of negotiations shall apply. For retrospective pricing, the schedule in effect at the time the work was performed shall apply.

1.15.2 Rental Costs

Equipment rental costs are allowable, subject to the applicable provisions of the Federal Acquisition Regulations, and shall be substantiated by certified copies of paid invoices. Rates for equipment rented from an organization under common control, lease-purchase or sale-leaseback arrangements will be determined using the schedule except that rental costs leased form an organization under common control that has an established practice of leasing the same or similar equipment to unaffiliated lessees are allowable. Costs for major repairs and overhaul are unallowable.

1.15.3 Equipment Costs

When actual equipment costs are proposed and the total amount of the pricing action is over $25,000, cost or pricing data shall be submitted on the Standard Form 1411, "Contract Pricing Proposal Cover Sheet". By submitting cost or pricing data, the Contractor grants to the Contracting Officer or an authorizing representative the right to examine those books, records, documents and other supporting data that will permit evaluation of the proposed equipment costs. After price agreement the Contractor shall certify that the equipment costs or pricing data submitted are accurate, complete and current.

1.16 SUBCONTRACTS AND WORK COORDINATION

Contract Clauses "SUBCONTRACTS", "PERMITS AND RESPONSIBILITIES", and "MATERIAL AND WORKMANSHIP" are supplemented as follows:

a. Divisions or sections of specifications are not intended to control the Contractor in dividing the work among subcontractor, or to limit work performed by any trade.

b. Contractor shall be responsible for coordination of the work of the trades, subcontractors, and materials.

c. The Government, owner, user or its representative will not undertake to settle any difference between the Contractor and Contractor's subcontractors, or between subcontractors nor shall they be contacted regarding these matters.

d. The Government reserves the right to refuse to permit employment on the work or require dismissal from the work of any subcontractor who, by reason of previous unsatisfactory work on Corps of Engineers projects, or for any other reason

is considered by the Contracting Officer to be incompetent or otherwise objectionable.

1.17

NOT USED.

1.18

NOT USED.

1.19 PROFIT

1.19.1 Weighted Guidelines

Weighted guidelines method of determining profit shall be used on any equitable adjustment change order or modification issued under this contract. The profit factors shall be as follows:

Factor	Rate	Weight	Value
Degree of Risk	20		
Relative difficulty of work	15		
Size of Job	15		
Period of performance	15		
Contractor's investment	05		
Assistance by Government	05		
Subcontracting	25		
	100		

1.19.2 Value

Based on the circumstances of each procurement action, each of the above factors shall be weighted from .03 to .12 as indicated below. The value shall be obtained by multiplying the rate by the weight. The value column when totaled indicates the fair and reasonable profit percentage under the circumstances of the particular procurement.

1.19.2.1 Degree of Risk

Where the work involves no risk or the degree of risk is very small, the weighting should be .03; as the degree of risk increases, the weighting should be increased up to a maximum of .12. Lump sum items will have, generally, a higher weighted value than the unit price items for which quantities are provided. Other things to consider: the portion of the work to be done by subcontractors, nature of work, where work is to be performed, reasonableness of negotiated costs, amount of labor included in costs, and whether the negotiation is before or after performance of work.

1.19.2.2 Relative Difficulty of Work

It the work is most difficult and complex, the weighting should be .12 and should be proportionately reduced to .03 on the simplest of jobs.

This factor is tied in to some extent with the degree of risk. Some things to consider: the nature of the work, by whom it is to be done, where, and what is the time schedule.

1.19.2.3 Size of Job

All work not in excess of $100,000 shall be weighted at .12. Work estimated between $100,000 and $5,000,000 shall be proportionately weighted from .12 to .05.

1.19.2.4 Periods of Performance

Jobs in excess of 24 months are to be weighted at .12. Jobs of lesser duration are to be proportionately weighted to a minimum of .03 for jobs not to exceed 30 days. No weight where additional time not required.

1.19.2.5 Contractor's Investment

To be weighted from .03 to .12 on the basis of below average, average, and above average. Things to consider: amount of subcontracting, mobilization payment item, Government furnished property, equipment and facilities, and expediting assistance.

1.19.2.6 Assistance by Government

To be weighted from .12 to .03 on the basis of average to above average. Things to consider: use of Government owned property, equipment and facilities, and expediting assistance.

1.19.2.7 Subcontracting

To be weighted inversely proportional to the amount of subcontracting. Where 80 percent or more of the work is to be subcontracted, the weighting is to be .03 and such weighting proportionately increased to .12 where all the work is performed by the Contractor's own forces.

1.22 BLASTING

Blasting will not be permitted.

PART 2 PRODUCTS (THIS PART NOT USED)

PART 3 EXECUTION (THIS PART NOT USED)

-- End of Section --

SECTION 01012
DESIGN AFTER AWARD

1.0 GENERAL

1.1 The Contractor shall propose a schedule for the number and composition of the design submittal phases. As a minimum, design submittals are required at the preliminary 50%, final 100%, and at the design complete stage. The requirements of each design stage are listed hereinafter. The Contractor shall reflect the number and schedules for the design submittals phases in the progress charts. As a maximum, the 50%, 100%, and design complete submittals shall be made in one consolidated package which includes each of the major categories listed in paragraph “Contents of Design Submittals”.

1.2 To facilitate fast-track design-construction activities the contractor shall submit a Site/Utility Design Submittal (100%) as the first design submittal. The Site/Utility Design shall complete the nearly complete Design provided. Following review, resolution, and incorporation of all Government comments, and submittal of a satisfactory set of Site/Utility Design documents, the New York District may allow the contractor to proceed with site development activities within the parameters set forth in the accepted design submittal. Submittal review, comment, and resolution times from this specification apply to all Design Submittals. No on-site construction activities shall begin prior to receipt of a construction NTP by the contractor.

2.0 DESIGNER OF RECORD

The Contractor shall identify, for approval, the Designer of Record for each area of work. One Designer of Record may be responsible for more than one area. All areas of design disciplines shall be accounted for by a licensed, registered Professional Architect or Engineer. The Designer(s) of Record shall stamp, sign, and date all design drawings under their responsible discipline at each design submittal stage.

3.0 DEFINITION OF DESIGN SUBMITTALS

3.1 First Site/Utility Design Submittal (100%). This submittal allows the contractor to concentrate initial efforts to complete the Site/Utility Design portions of the project. By allowing this work to be separated, the contractor is given the opportunity to fast track and begin construction on the Site/Utility work prior to completion of the building designs. This submittal shall consist of the following:

3.1.1 Design analysis, developed to 100%, site work and utility work only.

3.1.2 100% complete Site/utility drawings

3.1.3 Final Site/Utility specifications

3.1.4 Environmental permits, as required. When environmental permits are not required, the Contractor shall provide a statement with justification to that effect.

3.2 Preliminary Conformance - 50% Building Submittal. This submittal is intended to insure that the contractors design is proceeding in accordance with the terms of the solicitation and the contractor's original proposal as well as in a timely manner. This submittal shall consist of the

following:

3.2.1 Design analysis, developed to 50%

3.2.2 50% complete drawings

3.2.3 Draft specifications

3.2.4 Site/Utility Design information need not be included in this submittal package except where interface to the interior building systems is required.

3.3 Final Design Submittal (100%). The review of this submittal is to insure that the design is in accordance with directions provided the Contractor during the design process as well as the original solicitation and the contractor's proposal. The Contractor shall submit the following documents for Final Design Review:

3.3.1 50% review comments and responses.

3.3.2 The Design Analysis submitted for Final Design Review shall be in its final form. The Design Analysis shall include all backup material previously submitted and revised as necessary. All design calculations shall be included. The Design Analysis shall contain all explanatory material giving the design rationale for any design decisions which would not be obvious to an engineer reviewing the Final Drawings and Specifications.

3.3.3 The Contract Drawings submitted for Final Design Review shall include the drawings previously submitted which have been revised and completed as necessary as well as any additional drawings required. The Contractor is expected to have completed all of his coordination checks and have the drawings in a design complete condition. The drawings shall be complete at this time including the incorporation of any design review comments generated by the previous design reviews. The drawings shall contain all the details necessary to assure a clear understanding of the work throughout construction. Shop drawings will not be considered as design drawings. All design shall be shown on design drawings prior to submittal of shop drawings.

3.3.4 The Draft Specifications on all items of work submitted for Final Design Review shall consist of legible marked-up specification sections.

3.3.5 Site/Utility Design information need not be included in this submittal package except where interface to the interior building systems is required.

3.4 Design Complete Submittal. After the Final Design Review, the Contractor shall revise the Contract Documents by incorporating any comments generated during the Final Design Review and shall prepare final hard copy Contract Specifications. The Contractor shall submit the following documents for the design complete submittal:

3.4.1 Design analysis, in final 100% complete form. (Site and Building)

3.4.2 100% complete drawings. (Site and Building)

3.4.3 Final specifications. (Site and Building)

3.4.4 Final review comments and responses. (All)

3.4.5 Electronic Submission: All CADD files in native AutoCAD format, as well as all prepared technical specifications shall be provided on CD-ROM. Two copies are required.

3.5 Structural Interior Design.

3.5.1 Definition: The Structural Interior Design (SID) shall involve the selection and sampling of all applied finishes including material, color, texture and patterns necessary to complete the building's interior architectural features. The SID shall also include all furniture and workstation finishes. This information shall be submitted in 3" D-ring binders, 8-1/2" x 11" format.

3.5.2 Present architectural finish samples in an orderly arrangements according to like rooms/areas receiving like finishes. Each like room receiving like finishes will be noted as a Color Scheme. Each Color Scheme shall have a written description of material used. This written description shall use the same material abbreviations and notes that appear on the Room Finish Schedule and Legend in the contract drawings. Present furniture and workstation finishes on a color board separate from the architectural finishes. Submit the SID binders concurrently with the architectural design submittals.

3.5.3 Preliminary Submittals: The Contractor shall submit three complete sets of the initial SID package. The design philosophy shall use a warm neutral background color with appropriate accent colors. All SID proposals shall be reviewed and approved by the Government. The Interior Designer shall revise the SID binders after each review and update the SID to satisfy review comments. Each submittal will follow this method of review until the Government approves the completed SID package.

3.5.4 Final Submittal: After approval of the Preliminary Submittal, the Contractor shall submit three (3) complete sets of the approved and final Structural Interior Design package. Once the Contractor has submitted the SID and the Government has approved the submittal, all materials, finishes, colors, textures and pattern submitted and approved for this project are then considered as part of the contract and the Contractor shall furnish all approved SID finishes. No deviations will be considered.

3.5.5 Format: Submit all SID information and samples on 8 1/2"x 11" modules with only one foldout. The maximum foldout width shall be approximately 25 inches. No foldouts on the top or bottom of the pages. Place the project title, base, architectural firm, page number and date on the bottom of each page or module.

3.5.5.1 The module shall support and anchor all samples. Anchor large or heavy samples with mechanical fasteners, velcro or double sided foam tape. Rubber cement or glue will not be acceptable.

3.5.5.2 Assemble the 8 1/2" x 11" pages and modules in a 3" D-ring binder. Holes for placement of the modules in the binder shall be 3/8" in diameter. Each binder shall be identified on the outside spine and front cover by title, project number, percentage phase and date.

3.5.5.3 Material and finish samples shall indicate true pattern, color and texture. Carpet samples shall be large enough to indicate a complete pattern or design.

3.5.5.4 Where paint manufacturers color names and numbers are used indicated the finish of the paint such as gloss, semi-gloss, flat and so on.

3.5.5.5 Signage may include emblems, striping, letters, numbers and logos. The interior designer shall consider visual appearance, organization, location, structural supports (if required) and relation to other base graphics. Indicate on a separate signage sheet the location and message for all signage. Submit a sample of the signage material finish and color with the

structural finishes.

3.5.5.6 No photographs or colored photocopies of materials will be accepted or approved.

3.5.6 The SID Binder shall include the following information at each design submittal in this order:

==========

SEQUENCE OF SID SUBMITTAL

1. Title page

2. Table of contents

3. Design objectives - A statement of design objectives explaining the interior design philosophy of the facility shall be provided in the SID. Design objectives and the proposed method of accomplishing the objectives. Shall cover, when applicable, energy efficiency, safety, health, maintenance, image, personal performance of occupants and functional flexibility.

4. Interior floor plan

5. Interior sample finish boards

Scheme A
Scheme B
Scheme C

Example all restrooms could be noted as color scheme "A", all general open office finishes could be noted as color scheme "B" and the main lobby could be noted as color scheme "C".

6. Room finish schedule

7. Signage

8. Signage plan

9. Furniture and workstation composite floor plans

10. Furniture and workstation typicals - elevations and component inventory.

==========

4.0 QUANTITY OF DESIGN SUBMITTALS

4.1 General. The documents which the Contractor shall submit to the Government for each submittal are listed and generally described hereinafter.

DESIGN SUBMITTALS
DISTRIBUTION

Activity and Address	Drawings Size <Full>	Drawing Size <Half>	Color Boards **	Compact Disk***
New York City Department of Environmental Protection ATTN: Pete Dispensa	1	3	2	1
US Army Corps of Engineers, Norfolk District Technical Services Division ATTN: Bryan C. Burge	1	5	1	1
U.S. Army Corps of Engineers, New York Construction Area Office ATTN: Matthew A. Ludwig	1	3	1	1
U.S. Army Corps of Engineers, New York Programs & Project Management Division ATTN: Anthony DelVacchio	-	1	-	1

** Color boards shall be submitted with the 100% building submittal only.

*** Drawings shall be in AutoCad 2004 format (dwg) and Adobe Portable Document format (pdf) and shall be submitted on a Compact Disk (CD).

5.0 MAILING OF DESIGN SUBMITTALS

5.1 Mail all design submittals to the Government during design and construction, using an overnight mailing service. The Government will furnish the Contractor addresses where each copy shall be mailed to after award of the contract. The submittals shall be mailed to four (4) different addresses.

6.2 Each design submittal shall have a transmittal letter accompanying it indicating the date,

design percentage, type of submittal, list of items submitted, transmittal number and point of contact with telephone number.

6.0 COORDINATION

6.1 Written Records. The Contractor shall prepare a written record of each design site visit, meeting, or conference, either telephonic or personal, and furnish within five (5) working days copies to the Contracting Officer and all parties involved. The written record shall include subject, names of participants, outline of discussion, and recommendation or conclusions. Number each written record for the particular project under design in consecutive order.

6.2 Design Needs List. Throughout the life of his contract the Contractor shall furnish the COR a monthly "needs" list for design related items. This list shall itemize in an orderly fashion design data required by the Contractor to advance the design in a timely manner. Each list shall include a sequence number, description of action item, name of the individual or agency responsible for satisfying the action item and remarks. The list will be maintained on a continuous basis with satisfied action items checked off and new action items added as required. Once a request for information is initiated, that item shall remain on the list until the requested information has been furnished or otherwise resolved. Copies of the list will be mailed to both the Administrative Contracting Officer and the agencies tasked with supplying the information.

7.0 GOVERNMENT REVIEW

7.1 Within 30 days after Notice to Proceed, the Contractor shall submit, for approval, a complete design schedule with all submittals and review times indicated in calendar dates. The Contractor shall update this schedule monthly. No design submittals will be reviewed or evaluated until after receipt and acceptance of the proposed design/review schedule.

7.2 After receipt, the Government will be allowed fourteen (14) days to review and comment on each design submittal. For each design review submittal, the COR will furnish, to the Contractor, a single consolidated listing of all comments from the various design sections and from other concerned agencies involved in the review process. The review will be for conformance with the technical requirements of the solicitation and the Successful Offeror's (Contractor's) RFP proposal. If the Contractor disagrees technically with any comment or comments and does not intend to comply with the comment, he must clearly outline, with ample justification, the reasons for noncompliance within five (5) days after receipt of these comments in order that the comment can be resolved. The Contractor shall furnish disposition of all comments, in writing, with the next scheduled submittal. The Contractor is cautioned in that if he believes the action required by any comment exceeds the requirements of this contract, that he should take no action and notify the COR in writing immediately. Review conferences will be held for each design submittal at U.S. Army Corps of Engineers Construction Area Office at USMA, West Point. The Contractor shall bring the personnel that developed the design submittal to the review conference. These conferences will take place the week after the receipt of the comments by the Contractor.

7.3 If a design submittal is over one (1) day late in accordance with the latest design schedule, the Government review period will be extended 7 days. Submittals date revisions must be made in writing at least one (1) week prior to the effect submittal.

7.4 Post review conference action: Copies of comments, annotated with comment action agreed on, will be made available to all parties before the conference adjourns. Unresolved problems will be resolved by immediate follow-on action at the end of conferences. Valid comments will be incorporated. After receipt of final corrected design documents and upon incorporation of backcheck comments the Norfolk District will recommend to New York District the issuance of a Construction Notice to Proceed (NTP). The Government, however, reserves

the right to disapprove design document submittals if comments are significant. If final or backcheck submittal(s) are incomplete or deficient, and require correction by the Contractor and resubmittal for review, the cost of rehandling and reviewing will be deducted from payment due the Contractor at the rate of $ 5,000.00 per submittal.

8.0 DESIGN ANALYSIS

8.1 Media and Format. Present the design analysis on 8-1/2-inch by 11-inch paper except that larger sheets may be used when required for graphs or other special calculation forms. All sheets shall be in reproducible form. The material may be typewritten, hand lettered, handwritten, or a combination thereof, provided it is legible. Side margins shall be 1-inch minimum to permit side binding and head to head printing. Bottom margins shall be 1-1/4-inches, with page numbers centered 1 inch from the bottom.

8.2 Organization. Assign the several parts and sheets of the design analysis a sequential binding number and bind them under a cover indicating the name of the facility and project number, if applicable. The title page shall carry the designation of the submittal being made. The complete design analysis presented for final review with the final drawings and specifications shall carry the designation "FINAL DESIGN ANALYSIS" on the title page.

8.3 Design Calculations. Design calculations are a part of the design analysis. When they are voluminous, bind them separately from the narrative part of the design analysis. Present the design calculations in a clean and legible form incorporating a title page and index for each volume. Furnish a table of contents, which shall be an index of the indices, when there is more than one volume. Identify the source of loading conditions, supplementary sketches, graphs, formulae, and references. Explain all assumptions and conclusions. Calculation sheets shall carry the names or initials of the author and the checker and the dates of calculations and checking. No portion of the calculations shall be computed and checked by the same person.

8.4 Automatic Data Processing Systems (ADPS). When ADPS are used to perform design calculations, the design analysis shall include descriptions of the computer programs used and copies of the ADPS input data and output summaries. When the computer output is large, it may be divided into volumes at logical division points. Precede each set of computer printouts by an index and by a description of the computation performed. If several sets of computations are submitted, they shall be accompanied by a general table of contents in addition to the individual indices. Preparation of the description which must accompany each set of ADPS printouts shall include the following:

1. Explain the design method, including assumptions, theories, and formulae.
2. Include applicable diagrams, adequately identified.
3. State exactly the computation performed by the computer.
4. Provide all necessary explanations of the computer printout format, symbols, and abbreviations.
5. Use adequate and consistent notation.
6. Provide sufficient information to permit manual checks of the results.
7. Provide plan showing location of element being analyzed.

9.0 DRAWINGS

9.1 Prepare all drawings on Computer-Aided Design and Drafting (CADD) so that they are well-arranged and placed for ready reference and so that they present complete information. The Contractor shall prepare the drawings with the expectation that the Corps of Engineers, in the role of supervision, will be able to construct the facility without any additional assistance from the

Contractor. Drawings shall be complete, unnecessary work such as duplicate views, notes and lettering, and repetition of details shall not be permitted. Do not show standard details not applicable to the project, and minimize unnecessary wasted space. Do not include details of standard products or items which are adequately covered by specifications on the drawings. Detail the drawings such that conformance with the RFP can be checked and to the extent that shop drawings can be checked. Do not use shop drawings as design drawings. The design documents shall consist of drawings on a 36" x 24" format. The Contractor shall use standard New York District Corps of Engineers title blocks and borders on all drawings. Submit an index of drawings with each submittal. The COR will furnish the Contractor file, drawing, and specification numbers for inclusion in the title blocks of the drawings.

9.2 Create all drawings using CADD methods in AutoCAD format. Save all Design Complete CADD files as AutoCAD R2002 or later. The Contractor shall use EM 1110-1-1807 Standards Manual for U.S. Army Corps of Engineers Computer-Aided Design and Drafting (CADD) Systems as guidance to for standard details, title blocks, and layer/level assignments. Drawing features not addressed in EM 1110-1-1807 shall conform to drafting standards.

9.3 Only standard fonts provided by AutoCAD are allowed to be used in the creation of CADD files. No fonts created by third parties or the designer are permitted.

9.4 The uses of Reference files and Xrefs during the design stage is up to the discretion of the designers. All CADD files at Design Complete submittal shall be free standing, independent files, and not supported by reference files. All Xrefs files (AutoCAD) shall be “bound” at Design Complete submittal.

9.5 Submit all Design Complete CADD files on the following media.

- Read/Write CD-ROM Disk

10.0 SPECIFICATIONS

10.1 The Contractor shall submit marked-up and final specifications as required. The specifications may be any one of the major, well known master guide specification sources such as MASTERSPEC from the American Institute of Architects, SPECTEXT from Construction Specification Institute or Corps of Engineers Guide Specifications, etc. Use only one source for the project. Edit the specifications for this project and submit in marked-up or redlined draft version at the Final Review submittal stage. If the design is based on a specific product, the specification shall consist of the important features of the product. The specification shall be detailed enough such that another product meeting the specification could be substituted and it would not adversely impact the project. After incorporation of comments, submit a final, design complete specification package. Delete all marked-out or redlined text and type in all inserted text.

10.2 Submittal Register. Develop the submittal requirements during construction during the design phase of the contract, by producing a Contractor Submittal Register during design. Attach a submittal register to each section of the specifications for the submittal requirements of that section. Prepare the Submittal Register on ENG Form 4288. The Contractor shall be responsible for listing all required submittals necessary to insure the project requirements are complied with. The Register shall identify submittal items such as shop drawings, manufacturer's literature, certificates of compliance, material samples, guarantees, test results, etc that the Contractor shall submit for review during the life of the construction contract. The Contractor shall submit the completed Form 4288 to the COR for review and approval. The Contractor shall place all the Submittal Register pages in an appendix of the final specifications.

11.0 CONTENTS OF DESIGN SUBMITTALS

11.1 The 100% Site/Utility Design submittal shall contain as a minimum, the following:

11.1.1 General Narratives:

11.1.1.1 Site/Layout: Analysis of drainage patterns, parking provisions, traffic circulation, provisions for the handicapped, security requirements, and all items developed to completion. Set back requirements or specific clearance requirements. Locations of borrow and spoil areas.

11.1.1.2 Utility Systems: Design narrative for the LP gas, natural gas, water supply, electricity, telephone, fiber optics, storm drainage, and wastewater systems relating to this project. Include an analysis of the existing distribution systems capability to supply sufficient quantity at adequate levels. If the existing distribution systems are inadequate, provide the design solution to augment the systems to provide the requirements for the new facilities.

11.1.2 All drawings shall be complete all areas not fully developed in the provided Site/Utility plans and specifications shall be developed to 100 percent completion. In addition to the individual utility plans, submit a combined utility plan drawn to the same scale as the individual utility plans.

11.1.2.1 Site Layout: Scale shall be included.

11.1.2.2 Site Grading and Drainage Plans: Show locations of all sediment basins, diversion ditches, and other erosion control structures. Indicate the approximate drainage areas each will service. Indicate the materials, construction and capacity of each structure. Include limits of landscaping and seeded areas. Site grading and drainage shall be indicated by contour lines to match plans provided.

11.1.2.3 Road Alignment Plans: Scale shall be no greater than as included in the proposal and profiles showing pavement and shoulder widths, azimuths and curve data, limits of grading, and erosion control. The materials to be used shall be indicated.

11.1.2.4 Traffic Control Plan: Traffic routing and signage shall be in accordance with The Manual on Uniform Traffic Control Devices for Streets and Highways, U.S. Department of Transportation, Federal Highways Administration and as indicated in plans and specifications provided.

11.1.2.5 Sanitary Sewer System Plan: Scale shall be no greater than as included in the proposal and profiles showing location and elevation of pipe, thrust blocks, manholes, etc. Materials and construction of main and appurtenances shall be indicated. Specifications shall be provided.

11.1.2.6 Water Supply System Plans: Scale shall be no greater than as included in the proposal and profiles showing locations of wells, pumps, water softening system, valves, thrust blocks, connections, etc. Materials shall be indicated and specifications shall be provided for wells, pumps, water softening systems, valves, pipes, etc.

11.1.2.6.1 Label and identify Fire Hydrant locations.

11.1.2.7 Electrical Plan Requirements:

11.1.2.7.1 Required diagrams and details on Site Electrical Drawings.

11.1.2.7.1.a. Off-Site Electrical Distribution Plan:
11.1.2.7.1.b. Off-Site Primary Circuit Routing Plans:
11.1.2.7.1.c. Off-Site One Line Diagram. (If applicable)
11.1.2.7.1.d. Off-Site Details. (Aerial Pole Line Construction, etc.) (If applicable).
11.1.2.7.1.e. On-Site Electrical Distribution Plan:

11.1.2.7.1.f. On-Site One Line Diagram.
11.1.2.7.1.g. On-Site Distribution Transformer Schedule: Provide with the following headings: Transformer Designation. Transformer Size (KVA). Building(s) Served. Primary Phase(s) and Circuit to which connected.
11.1.2.7.1.h. On-Site Details (Site Lighting, Trenching, Pad-Mounted Transformer, etc.).
11.1.2.7.1.i. Cathodic Protection

11.1.2.8 Specifications: Provide Final Specifications which include all sections which apply to site/utility work.

11.1.2.9 Design Analysis: Design analysis shall include all additional design calculations required to fully develop the Site/Utility Design. Provide any additional information to support the completed design of the site and utility systems included in this submittal.

11.1.2.10 Geotechnical: Soils analysis and geotechnical report. Geotechnical information must be provided to support all assumptions and design parameters utilized in the presented site/utility design as applicable. Geotechnical analysis must be performed by a Registered Professional Engineer whos specialty is Geotechnical Engineering.

11.2 The Preliminary Conformance – 50% Building Submittal shall contain as a minimum, the following:

11.2.1 Reserved.

11.2.2 Reserved.

11.2.3 Architectural

11.2.3.1 Not Used.

11.2.3.2 Architectural Floor Plans shall indicate dimensions, columns lines, and detail references. Toilets and other specialized areas shall be drawn to 1/4" scale and shall show any needed interior features.

11.2.3.3 Finish schedule shall indicate material, finishes, colors and any special interior design features such as soffits, fascias, and lighting troughs, etc.

11.2.3.4 All required equipment shall be shown on the drawings with an equipment list.

11.2.3.5 List any special graphics requirements that will be provided.

11.2.3.6 Schedules shall be provided for both doors and windows. These schedules shall indicate sizes, types, and details for all items shown on floor plans.

11.2.3.7 Hardware sets using BHMA designations.

11.2.3.8 Composite floor plan showing all furniture and workstations. Also show typical elevations of each type of workstation.

11.2.3.9 SID Package.

11.2.3.10 Fire Protection and Life Safety Analysis. This analysis must be performed by a Registered Fire Protection Engineer (FPE). NICET certification is not sufficient to address this requirement.

11.2.4 Structural Systems

11.2.4.1 State the loads to be used for design. Include roof and floor loads; equipment loads, wind loads, lateral earth pressure loads, seismic loads, etc., as applicable.

11.2.4.2 Describe the method of providing lateral stability for the structural system to meet seismic and wind load requirements. Include sufficient preliminary calculations to verify the adequacy of the method.

11.2.4.3 Furnish calculations for all principal roof, floor, and foundation members.

11.2.4.4 This submittal shall include drawings showing roof and floor framing plans as applicable. Principal members and significant concentrated loads will be shown on the plans. A foundation plan shall also be furnished showing main footings and grade beams where applicable. Where beam, column, and footing schedules are used, show schedules and fill in sufficient items to indicate method to be used. Show typical bar bending diagram if applicable. Typical sections shall be furnished for roof, floor, wall, armory, and foundation conditions. Structural drawings for proposals and submittals shall be separate from architectural drawings. Structural plans and details shall be fully coordinated with other disciplines.

11.2.4.5 Provide any computer analyses used shall be widely accepted, commercially available programs and complete documentation of the input and output of the program.

11.2.4.6 Provide preliminary seismic analyses for major building structural components. Seismic calculations shall clearly demonstrate compliance with all requirements set forth in the Statement of Work.

11.2.5 Plumbing Systems

11.2.5.1 List all references used in the design including Government design documents and industry standards.

11.2.5.2 Provide justification and brief description of the types of plumbing fixtures, piping materials and equipment proposed for use.

11.2.5.3 Prepare preliminary calculations for systems such as sizing of domestic hot water heater and piping; lp gas piping and tanks..

11.2.5.4. Indicate locations and general arrangement of plumbing fixtures and major equipment.

11.2.5.5 Include plan and isometric riser diagrams of all areas including hot water, cold water, waste and vent piping. Piping layouts and risers should also include LP gas, and other specialty systems as applicable.

11.2.5.6 Include equipment and fixture connection schedules with descriptions, capacities, locations, connection sizes and other information as required.

11.2.6 Fire Protection/Suppression

11.2.6.1 List all references used in the design including Government design documents and industry standards used to generate the fire protection analysis.

11.2.6.2 Classify each building in accordance with fire zone, building floor areas and height and number of stories. This information shall be contained in the fire protection analysis.

11.2.6.3 Discuss and provide description of required fire protection requirements including extinguishing equipment, detection equipment, alarm equipment. Alarm and detection equipment shall interface to requirements of Electronic Systems. This information shall be contained in the fire protection design analysis.

11.2.6.4 Prepare a plan for each floor of each building that presents a compendium of the total fire protection features being incorporated into the design. Provide the following types of information:

The location and rating of any fire-resistive construction such as occupancy separations, area separations, exterior walls, shaft enclosures, corridors, stair enclosures, exit passageways, etc.

The location and coverage of any fire detection systems.

The location of any other major fire protection equipment.

Indicate any hazardous areas and their classification.

11.2.7 Electronic Systems: Electronic System Responsibilities include the following:

Fire Detection and Fire Alarm System
Fire Suppression System
Public Address System
Telephone system
Interior Building LAN System
Special Grounding Systems
Carthodic Protection
Intrusion Detection, Card Access System
Central Control and Monitoring System
Site Lighting Control System
Fuel Storage Control System
Cable Television System

11.2.7.1 The design analysis shall include all calculations required to support design decisions and estimates at this stage of design. The analysis shall include specific criteria furnished, conference minutes and cost analyses of all systems considered.

11.2.7.2 Design of the fire alarm and detection system shall include layout drawings for all devices and a riser diagram showing the control panel, annunciator panel, all zones, radio transmitter and interfaces to other systems (HVAC, sprinkler, etc.).

11.2.7.3 Specify all components of the Fire Suppression (FS) System in the FS section of the specifications. Provide a clear description of how the system will operate and interact with other systems such as the fire alarm system. Include a riser diagram on the drawings showing principal components and interconnections with other systems. Include FS system components on drawing legend. All components shown of floor plans shall be designated as FS system components (as opposed to Fire Alarm components). Show the location of FS control panels, HVAC control devices, sensors, and 120V power panel connections on the floor plans. Indicate zoning of areas by numbers (1, 2, 3) and detectors subzoned for cross zoning by letter designations (A and B). Differentiate between ceiling mounted and underfloor detectors with distinct symbols and indicate subzone of each.

11.2.7.4 Show location of telephone outlets (including pay phones) on the plans. Include legend and symbol definition to indicate height above finished floor. Show Telephone Conduit System Riser Diagram. Size conduit on Riser Diagram. Do not show conduit runs between backboard and outlets on the floor plans. Underground telephone distribution conduit shall be shown on either the electrical or electronic site plan.

11.2.7.5 Grounding System. The specifications and drawings shall completely reflect all of the design requirements. The specifications shall require field tests (in the construction phase), witnessed by the Contracting Officer, to determine the effectiveness of the grounding system. The design shall include drawings showing existing construction. Verification of the validity of any existing drawings and/or any other data furnished by the Government shall be the responsibility of the engineering services firm.

11.2.7.6 Provide a statement describing the extent of any exterior work such as telephone lines, cable television (TV) distribution cables, duct banks, etc., outside of 5 feet from the building line.

11.2.7.7 Provide the name of the licensed corrosion engineer or NACE specialist. Provide the following for cathodic protection systems:

Clearly define areas of structures or components in soil or water to be protected.

Type system recommended, comparison of systems, cost estimates showing all equipment alternatives.

Calculations on all systems that are considered showing all information and descriptions.

11.2.7.7.1 Design of Cathodic Protection. The design shall clearly provide a thorough and comprehensive specification and drawing. The design plans and specifications shall show extent of the facilities to be protected, location and type of anodes, location of test points, details for sectionalizing an underground piping system. This design shall be complete enough to purchase equipment and build without design changes to meet criteria of protection.

11.2.7.8 Exterior work to be shown on electrical site plan.

Existing and new service lines, both overhead and underground, shall be properly identified.

Show removals and relocations if any.

11.2.7.9 Provide a descriptive narrative of all electronic systems that are required for project. Define any hazardous areas (as defined in the National Electric Code) and indicate the type of equipment proposed for use in such areas. Show the location of all electronic system panels, etc., on the floor plans. Show the proposed riser diagrams for all systems. Sizes of all conduit, wires, cables, panels, etc. Provide a complete symbol legend for all devices or equipment shown on the plans. For work requiring removals or demolition, the designer shall show by use of drawings or narrative, how demolition work is to be done.

11.2.8 Electrical and Mechanical Systems: Provide all information as required on the 100% design submittal developed to 50% completion.

11.2.8 Specifications: Draft of specifications, including index and trade sections.

11.3 The 100% building design submittal shall contain, as a minimum, the following items for all submittals:

11.3.1 General: A complete set of construction documents plans and specifications at the same level of detail as if the project were to be bid including a complete list of equipment, fixtures and materials to be used. The final drawings are an extension of the reviewed 50% drawings and are to include the 50% comments and responses. All details shall be shown on the drawings.

11.3.2 The design analysis is an extension of the reviewed 50% design analysis and supports and verifies that the design complies with the requirements of the project.

11.3.3 Submit marked-up specifications. The specifications shall be coordinated with the drawings and describe in detail all items shown on the drawings as well as other requirements for construction.

11.3.4 Not Used.

11.3.5 Architectural
11.3.5.1 All architectural drawings shall be coordinated with the other engineering disciplines. Ensure that the plans are in compliance with the applicable codes. It will be the Contractor's responsibility to implement the comments generated from any design review submittal as well as verify the consistency between plans and specifications. The evaluation of the Contractor's submittals shall be based on degree to which the submittals meet the requirements set forth in this document and the specifications.

11.3.5.2 Furniture and workstation composite floor plans. Furniture and workstation typicals - elevations and component inventory.

11.3.5.3 SID package.

11.3.5.4 Fire Protection and Life Safety Analysis. This analysis must be performed by a Registered Fire Protection Engineer (FPE). NICET certification is not sufficient to address this requirement.

11.3.6 Structural Design

11.3.6.1 Furnish complete checked calculations for all structural members. Incorporate any changes required by comments on 50% Design Submittal.

11.3.6.2 Prior to this submittal, structural drawings shall be coordinated with all other design disciplines.

11.3.6.3 The final structural drawings shall contain the following information as a set of general notes:

The allowable soil bearing value.
Lateral earth pressure coefficients
The design stresses of structural materials used.
The design live loads used in the design of various portions of the structures.
The design wind speed and coefficients for each pressure zone (including uplift and components and cladding).
The seismic zone and the "K", "C", "I" and "Z" values used in design.
Material specifications for steel, masonry, mortar, concrete, prestressed concrete, rebar, welds, bolts, etc.

11.3.6.4 All structural drawings and calculations shall be checked and stamped by the designer of record (a registered Professional Engineer).

11.3.7 Fire Sprinkler System: provide a file of the input data used in the computer program to design the fire sprinkler system as well as the out put data.

11.3.8 Specific Mechanical and Plumbing Requirements:

11.3.8.1 Required Plans, Diagrams, Schedules and Details on Mechanical Drawings:

11.3.8.1.1. Mechanical Floor Plan: The floor plans shall show all principle architectural features of the building which will affect the mechanical design. The floor plans shall also show the following:

Room designations.
Mechanical legend and applicable notes.
Location of all ductwork or piping (double line ductwork required).
Location and capacity of all terminal units (i.e., registers, diffusers, grilles, hydronic baseboards).
Exhaust fan and range hood location.
Size of all ductwork and piping.
Thermostat location.
Location of all air handling equipment.
Return air paths (i.e., undercut doors, transfer grilles).
Flue piping size and location.
Piping diagram for forced hot water system (if used).
Fuel supply and return piping

11.3.8.1.2. Equipment Schedule: Complete equipment Schedules shall be provided. Schedule shall also include:

Capacity
Electrical characteristics
Efficiency (if applicable)
Manufacturer's name
Optional features to be provided
Physical size

11.3.8.1.3 Details: Construction details, sections, elevations, etc., shall be provided where required for clarification of methods and materials of design. Roof and exterior wall penetrations shall be detailed on the drawings.

11.3.8.2 Plumbing Floor Plan: The floor plan shall show all principal architectural features of the building which will affect the plumbing design. Separate plumbing plans will not be required if sufficient information can be shown on the mechanical plans to meet the requirements shown below. The floor plan shall also show the following:

Room designations.
Fixture Schedule.
Location of utility entrances.
Waste and water pipe location and size.
Fixture designations.
Water pumps and tanks
Water Softening System

11.3.8.3 Design Analysis: Complete design calculations for mechanical systems. Include computations for sizing PM&E equipment, air duct design, and U-factors for ceilings, roofs and exterior walls and floors. Contractor shall employ commercially available energy analysis techniques to determine the energy performance of all passive systems and features. Use of hourly energy load computer simulation (e.g., TRNSYS, DOE 2.1 Blast, etc.) is required. These

calculations can be used to size the mechanical systems. Based on the results of calculations, provide a complete list of the materials and equipment proposed for heating and plumbing, with the manufacturer's published cataloged product installation specifications and roughing-in data. The heating and cooling equipment data shall include the manufacturer's wiring diagrams, installation specifications, ARI certification, and the standard warranty for the equipment.

11.3.9 Specific Electrical Requirements:

11.3.9.1 Required Plans, Diagrams, Schedules, and Details on Unit Electrical Drawings:

11.3.9.1.1. Electrical Floor Plan. The floor plans shall show all principle architectural features of the building which will affect the electrical design. The floor plan shall also show the following:

Room designations.
Electrical legend and applicable notes.
Lighting fixtures, properly identified.
Location of smoke and CO detectors.
Location of telephone and cable TV outlets.
Switches for control of lighting.
Receptacles.
Location and designation of panelboards. Plans should clearly indicate type of mounting required (flush or surface) and be reflected accordingly in specifications. Service entrance (conduit and main disconnect).
Location, designation and rating of motors and/or equipment which requires electrical service. Show method of termination and/or connection to motors and/or equipment. Show necessary junction boxes, disconnects, controllers (approximate only), conduit stubs, and receptacles required to serve the motor and/or equipment.

11.3.9.1.2. Building Riser Diagram (from pad-mounted transformer to unit load center panelboard): Indicate the types and sizes of electrical equipment and wiring. Include grounding and metering requirements.

11.3.9.1.3. Load Center Panelboard Schedule(s): Schedule shall indicate the following information:

Panelboard Characteristics (Panel Designation, Voltage, Phase, Wires, Main Breaker Rating and Mounting.
Branch Circuit Designations.
Load Designations.
Circuit Breaker Characteristics. (Number of Poles, Trip Rating, AIC Rating)
Branch Circuit Connected Loads (AMPS).
Special Features.

11.3.9.1.4 Lighting Fixture Schedule: (Schedule shall indicate the following information:)

Fixture Designation.
General Fixture Description.
Number and Type of Lamp(s).
Type of Mounting.
Special Features.

11.3.9.1.5. Details: Construction details, sections, elevations, etc., shall be provided where required for clarification of methods and materials of design.

11.3.9.2. Required Electrical Design Analysis: Design analysis and calculations for the electrical systems shall be prepared by a licensed professional engineer with experience in family housing,

and shall be stamped as such. The design analysis shall be separately bound, in one or more volumes. Show functional and engineering criteria, design information, and calculations applicable to the project. The analysis shall be organized in a format appropriate for review, approval, and record purposes. The design calculations shall indicate methods and references identified, and shall explain assumptions and conclusions.

11.3.9.2.1. Voltage Drop (VD) Calculations: Select conductor sizes of primary feeders, site lighting circuits, service laterals, and unit feeder conductors. Calculate maximum length for each phase of each primary circuit, using a maximum allowable VD for each circuit. Calculate voltage drops for each conductor. Maximum allowable voltage drop for site lighting and service laterals is 3%. The combined voltage drop for the service laterals, unit feeders, and branch circuit cannot exceed 5%. Calculate the available fault current at the main breaker for the living unit panel. Provide a coordination study to support breaker selection.

11.3.10 Specifications: Provide final specifications. The Contractor shall make final identification of all materials and finishes at this stage.
11.4 Building Design complete submittal:

11.4.1 Design Documents: Drawings and Specifications shall be 100% complete, signed and sealed by the designer of record. All previous review comments shall be incorporated.

11.4.2 Design Analysis: Complete design analysis for all design disciplines. The final Fire Protection and Life Safety Analysis shall be included in the Design Analysis.

11.4.3 Comment Response Package: Complete package showing all comments from all previous reviews and the respective response and disposition.

11.4.4 This submittal shall include all drawings, specifications, and design information from the 100% Site/Utility submittal to form a complete design package.

12.0 DESIGN RELATED PRODUCTS

12.1 Architectural Renderings: Contractor shall provide the original and three copies of each ground level perspective artist's renderings of completed typical facilities with walks, parking, and landscaping. Renderings shall be no smaller than 14" x 18" or larger than 28" x 36", multi-colored, and shall be suitably titled, matted, and framed.

12.2 Not Used.

12.3 Submittal Register, ENG FORM 4288: The Contractor shall complete and submit three (03) copies of a "preliminary" Eng Form 4288, Submittal Register to Contracting Officer. The "preliminary" Eng Form 4288, Submittal Register shall have the column "Submittal Identification", "Specification Paragraph Number", "Description of Submittal" "Type of Submittal", and "Remarks" completed; the Contractor shall identify whether the submittal is for "Government Approval" or for "Government Information" under the column "Remarks." The "final" Eng Form 4288, Submittal Register, shall be in accordance with clause CONTRACTOR SUBMITTALS AND SUBMITTAL CONTROL in this section.

12.4 Reproduction: Upon completion of the Government review of the Design Complete Submittal documents, the original will be returned to the Contractor for reproduction purposes. The Contractor will be responsible for his own reproduction as well as reproduction for Government use. The Government will require the number of copies of the plans and specifications indicated for Design Submittals and as indicated below. The originals will be retained by the Contractor for recording of as-built conditions. See section 00800 for additional as-built requirements. Upon completion of the project, the original design documents corrected to reflect as-built conditions will be supplied to the Government, and the representative of the New

York City Department of Environmental Protection.

PROJECT COMPLETE and AS BUILT
DISTRIBUTION

Activity and Address	Drawings Size <Full>	Drawing Size <Half>	Color Boards **	Compact Disk***
New York City Department of Environmental Protection ATTN: Pete Dispensa	2	8	-	1
US Army Corps of Engineers, Norfolk District Technical Services Division ATTN: Bryan C. Burge	1	2	-	1
U.S. Army Corps of Engineers, New York Construction Area Office ATTN: Matthew A. Ludwig	1	4	-	1
U.S. Army Corps of Engineers, New York Programs & Project Management Division ATTN: Anthony DelVacchio	-	2	-	1

** Color boards shall be submitted with the 100% building submittal only.

*** Drawings shall be in AutoCad 2004 format (dwg) and Adobe Portable Document format (pdf) and shall be submitted on a Compact Disk (CD).

SECTION 01312

RESIDENT MANAGEMENT SYSTEM

1. GENERAL

The Government will use the Resident Management System for Windows (RMS) to assist in its monitoring and administration of this contract. The Contractor shall use the Government-furnished Construction Contractor Module of RMS, referred to as QCS, to record, maintain, and submit various information throughout the contract period. This joint Government-Contractor use of RMS and QCS will facilitate electronic exchange of information and overall management of the contract. QCS provides the means for the Contractor to input, track, and electronically share information with the Government in the following areas:

Administration
Finances
Quality Control
Submittal Monitoring
Scheduling
Import/Export of Data

1.1 Correspondence and Electronic Communications

For ease and speed of communications, both Government and Contractor will, to the maximum extent feasible, exchange correspondence and other documents in electronic format. Correspondence, pay requests and other documents comprising the official contract record shall also be provided in paper format, with signatures and dates where necessary. Paper documents will govern, in the event of discrepancy with the electronic version.

1.2 other Factors

Particular attention is directed to Contract Clause, “Schedules for Construction Contracts”, Contract Clause, “Payments”, Section 01320, “Project Schedule”, Section 01330, SUBMITTAL PROCEDURES, and Section 01451, CONTRACTOR QUALITY CONTROL, which have a direct relationship to the reporting to be accomplished through QCS. Also, there is no separate payment for establishing and maintaining the QCS database; all costs associated therewith shall be included in the contract pricing for the work.

2. QCS SOFTWARE

QCS is a Windows-based program that can be run on a stand-alone personal computer or on a

network. The Contractor shall be responsible after award of the contruction contract to download the QCS software and User Manual from the Government's RMS Internet website ('http://winrms.usace.army.mil'). Prior to the Pre-Construction Conference, the Contractor shall be responsible to download, install and use the latest version of the QCS software from the Government's RMS Internet Website. Any program updates of QCS will be made available to the Contractor via the Government RMS website as they become available.

3. SYSTEM REQUIREMENTS

The following listed hardware and software is the minimum system configuration that the Contractor shall have to run QCS:

Hardware

IBM-compatible PC with 200 MHz Pentium or higher processor

64+ MB RAM

4 GB hard drive disk space for sole use by the QCS system

3 ½ inch high-density floppy drive

Compact disk (CD) Reader

Color monitor

Laser printer compatible with HP Laserjet III or better, with minimum 4 MB installed memory.

Connection to the Internet, minimum 28 BPS.

Software

MS windows 95 or newer version operating system (MS windows NT 4.0 or newer is recommended)

Word Processing software- MS Word 97 or newer

Internet browser

The Contractor's computer system shall be protected by virus protection software that is regularly upgraded with all issued manufacturer's updates throughout the life of the contract.

Electronic mail (E-mail) compatible with MS outlook

4. RELATED INFORMATION

4.1 QCS User Guide

After contract award, the Contractor shall download the program and manual for the installation and use of QCS from the Government RMS Internet Website ('http://winrms.usace.army.mil').

5. CONTRACT DATABASE

Prior to the pre-construction conference, the Government shall provide the Contractor with basic contract award data to use for QCS. The Government will provide data updates to the Contractor as needed, generally by files attached to E-mail. These updates will generally consist of submittal reviews, correspondence status, QA comments, and other administrative and QA data.

6. DATABASE MAINTENANCE

The Contractor shall establish, maintain, and update data for the contract in the QCS database throughout the duration of the contract. The Contractor shall establish and maintain the QCS database at the Contractor's site office. Data updates to the Government shall be submitted by E-mail with file attachments, e.g., daily reports, schedule updates, payment requests. If permitted by the Contracting Officer, a data diskette or CD-ROM may be used instead of E-mail (see Paragraph DATA SUBMISSION VIA COMPUTER DISKETTE OR CD-ROM). The QCS database typically shall include current data on the following items:

6.1 Administration

6.1.1 Contractor Information

The database shall contain the Contractor's name, address, telephone numbers management staff, and other required items. Within 14 calendar days of receipt of QCS software from the Government, the Contractor shall deliver Contractor administrative data in electronic format via E-mail.

6.1.2 Subcontractor Information

The database shall contain the name, trade, address, phone numbers, and other required information for all subcontractors. A subcontractor must be listed separately for each trade to be performed. Each subcontractor/trade shall be assigned a unique Responsibility Code, provided in QCS. Within 14 calendar days of receipt of QCS software from the Government, the Contractor shall deliver subcontractor administrative data in electronic format via E-mail.

6.1.3 Correspondence

All Contractor correspondence to the Government shall be identified with serial number. Correspondence initiated by the Contractor's site office shall be prefixed with "S". Letters initiated by the Contractor's home (main) office shall be prefixed with "H". Letters shall be numbered starting from 0001. (e.g., H-0001 or S-0001). The Government's letters the Contractor will be prefixed with "C".

6.1.4 Equipment

The Contractor's QCS database shall contain a current list of equipment planned for use or being used on the jobsite, including the most recent and planned equipment inspection dates.

6.1.5 Management Reporting

QCS includes a number of reports that Contractor management can use to track the status of the project. The value of these reports is reflective of the quality of the data input, and is maintained in the various sections of QCS. Among these reports are: Progress Payment Request worksheet, QA/QC comments, Submittal Register Status, Three-Phase Inspection checklists.

6.2 Finances

6.2.1 Pay Activity Data

The QCS database shall include a list of pay activities that the Contractor shall develop in conjunction with the construction schedule. The sum of all pay activities shall be equal to the total contract amount, including modifications. Pay activities shall be grouped by Contract Line Item Number (CLIN), and the sum of the activities shall equal the amount of each CLIN. CLINs may include multiple activities, but activities may be assigned to only one such CLIN Itern. The total of all CLINs equals the Contract Amount.

6.2.2 Payment Requests

All progress payment requests shall be prepared using QCS. The Contractor shall complete the payment request worksheet and include it with the payment request. The work completed under the contract, measured as percent or as specific quantities, shall be updated at least monthly. After the update, the Contractor shall generate a payment request report using QCS. The Contractor shall submit the payment requests with supporting data by E-mail with file attachment(s). If permitted by the Contracting Officer, a data diskette may be used instead of E-mail. A signed paper copy of the approved payment request is also required, which shall govern in the event of discrepancy with the electronic version.

6.3 Quality Control (QC)

QCS provides a means to track implementation of the 3-phase QC Control System, prepare daily reports, identify and track deficiencies, document progress of work, and support other contractor QC requirements. The Contractor shall maintain this data on a daily basis. Entered data will automatically output to the QCS generated daily report. The Contractor shall provide the Government a Contractor Quality Control (CQC) Plan within the time required in Section 01451, CONTRACTOR QUALITY CONTROL. Within seven calendar days of Government acceptance, the Contractor shall submit a data diskette or CD-ROM reflecting the information contained in the accepted CQC Plan: schedule, pay activities, features of work, submittal register, QC requirements, and equipment list.

6.3.1 Daily Contractor Quality Control (CQC) Reports

QCS includes the means to produce the Daily COC Report. The Contractor may use other formats to record basic QC data. However, the Daily CQC Report generated by QCS shall be the Contractor's official report. Data from any supplemental reports by the Contractor shall be summarized and consolidated onto the QCS-generated Daily CCC Report. Daily CCC Reports shall be submitted as required by Section 01451, CONTRACTOR QUALITY CONTROL. Reports shall be submitted electronically to the Government using E-mail or diskette within 24 hours after the date covered by the report. Use of either mode of submittal shall be coordinated with the government representative. The Contractor shall also provide the Government a signed, printed copy of the daily CQC report. Contractor progress payments shall not be submitted until CQC reports are up to date.

6.3.2 Deficiency Tracking

The Contractor shall use QCS to track deficiencies. Deficiencies identified by the Contractor will be numerically tracked using QC punch list items. The contractor shall maintain a current log of its QC punch list items in the QCS database. The Government will log the deficiencies it has identified using its QA punch list items. The Government's QA punch list items will be included in its export file to the Contractor. The contractor will acknowledge receipt of these QA punch list items by specific number reference on the Daily CCC Report. The Contractor shall regularly update the correction status of both QC and QA punch list items.

6.3.3 Three-Phase Control Meetings

The Contractor shall maintain scheduled and actual dates and times of preparatory and initial control meetings in QCS.

6.3.4 Accident/Safety Tracking

The Government will issue safety comments, directions, or guidance whenever safety deficiencies are observed. The Government's safety comments will be included in its export file to the Contractor. The Contractor shall regularly update the correction status of the safety

comments. In addition, the Contractor shall utilize QCS to advise the Government of any accidents occurring on the jobsite. This brief supplemental entry is not to be considered as a substitute for completion of mandatory reports, e.g., ENG Form 3394 and OSHA Form 200.

6.3.5 Features of Work

The Contractor shall include a complete list of the features of work in the QCS database. A feature of work may be associated with multiple pay activities. However, each pay activity (see subparagraph "Pay Activity Data" of paragraph "Finances") will only be linked to a single feature of work.

6.3.6 QC Requirements

The Contractor shall develop and maintain a complete list of QC Testing, Transfer Property listings, Installed Property listings, and User Training requirements in QCS, all tied to individual pay activities. The Contractor shall update all data on these QC requirements as work progresses, and shall promptly provide this information to the Government via QCS.

6.4 Submittal Management

The contractor will initially be required to enter all required submittal information into QCS. Thereafter, the Contractor shall maintain a complete list of all submittals, including completion of all data columns of ENG Form 4288, as required by Section 01330, SUBMITTAL PROCEDURES. Dates on which submittals are received and returned by the Government will be included in its export file to the Contractor. The Contractor shall use QCS to track and transmit all submittals. ENG Form 4025, Submittal Transmittal Form, and Submittal Register Update, ENG Form 4288, shall be produced using QCS. RMS will be used to update, store and exchange submittal registers and transmittals, but will not be used for storage of actual submittals.

6.5 Schedule

The Contractor shall develop a construction schedule consisting of pay activities, in accordance with Contract Clause "Schedules for Construction Contracts", or Section 01320, PROJECT SCHEDULE, as applicable. This schedule shall be input and maintained in the QCS database either manually or by using the Standard Data Exchange Format (SDEF) (see Section 01320 PROJECT SCHEDULE). The contractor shall be responsible for ensuring the SDEF is in the format required to upload the data to the QCS Module; otherwise, the contractor will be required to enter the data manually. The updated schedule data shall be included with each pay request submitted by the Contractor.

6.6 Import/Export of Data

QCS includes the ability to export Contractor data to the Government and to import Government-provided data.

7. IMPLEMENTATION

Contractor use of QCS as described in the preceding paragraphs is mandatory. The Contractor shall ensure that sufficient resources are available to maintain its QCS database, and to provide the Government with regular database updates. QCS shall be an integral part of the Contractor's management of quality control.

8. DATA SUBMISSION VIA COMPUTER DISKETTE OR CD-ROM

The Government-preferred method for Contractor's submission of updates, payment requests, correspondence and other data is by E-mail with file attachment(s). For locations where this is not feasible, the Contracting Officer may permit use of computer diskettes or CD-ROM for data transfer. Data on the disks or CDs shall be exported using the QCS built-in export function. If used, diskettes and CD-ROMs will be submitted in accordance with the following:

8.1 File Medium

The Contractor shall submit required data on 3-1/2" double-sided high-density diskettes formatted to hold 1.44 MB of data, capable of running under Microsoft Windows 95 or newer. Alternatively, CD-ROMs may be used. They shall conform to industry standards used in the United States. All data shall be provided in English.

8.2 Disk or CD-ROM Labels

The Contractor shall affix a permanent exterior label to each diskette and CD-ROM submitted. The label shall indicate in English, the QCS file name, full contract number, contract name, project location, data date, name and telephone number of person responsible for the data.

8.3 File Names

The Government will provide the file names to be used by the Contractor with the QCS software.

9. WEEKLY SUBMISSION OF EXPORT FILES

The contractor shall, at a minimum, generate and submit weekly export file to the Gov't.

10. MONTHLY COORDINATION MEETING

The Contractor shall update the QCS database each workday. At least monthly, the Contractor shall generate and submit an export file to the Government with schedule update and progress payment request. As required in Contract Clause "Payments", at least one week prior to submittal, the contractor shall meet with the Government representative to review the planned progress payment data submission for errors and omissions. The contractor shall make all required corrections prior to Government acceptance of the export file and progress payment request. Payment requests accompanied by incomplete or incorrect data submittals will be returned. The Government will not process progress payments until an acceptable QCS export file is received.

11. NOTIFICATION OF NONCOMPLIANCE

The Contracting Officer will notify the Contractor of any detected noncompliance with the requirements of this specification. The Contractor shall take immediate corrective action after receipt of such notice. Such notice, when delivered to the Contractor at the work site, shall be deemed sufficient for the purpose of notification. The QCS Module shall be completed to the satisfaction of the Contracting Officer prior to any contract payment (except for Bonds, and Insurance, as approved by the Contracting Officer).

----End of Section----

SECTION 01320

PROJECT SCHEDULE:
NETWORK ANALYSIS SYSTEM
(NYD Rev. 2/03)

PART 1 GENERAL

1.1 SUBMITTALS

Government approval is required for submittals with a "GA" designation; submittals having an "FIO" designation are for information only. The following shall be submitted in accordance with Section 01330 SUBMITTAL PROCEDURES:

SD-07 Schedules

Initial Project Schedule; GA. Preliminary Project Schedule;
GA. Periodic Schedule Updates; GA.

Four copies of the schedules showing codes, values, categories, numbers, items, etc., as required.

SD-08 Statements

Qualifications; FIO.

Documentation showing qualifications of personnel preparing schedule reports.

SD-09 Reports

Narrative Report; FIO. Schedule Reports; FIO.

Four copies of the reports showing numbers, descriptions, dates, float, starts, finishes, durations, sequences, etc., as required.

1.2 QUALIFICATIONS

The Contractor shall designate an authorized representative who shall be responsible for the

preparation of all required project schedule reports. This person shall have previously created and reviewed computerized schedules. Qualifications of this individual shall be submitted to the Contracting Officer for review with the Preliminary Project Schedule submission.

PART 2 PRODUCTS (Not Applicable)

PART 3 EXECUTION

3.1 GENERAL

Pursuant to the Contract Clause, SCHEDULE FOR CONSTRUCTION CONTRACTS a Project Schedule as described below shall be prepared. The Contractor shall be responsible for scheduling of all procurement and construction activities as well as design activities if applicable to the project. The scheduling of construction shall be the responsibility of the Contractor. Contractor management personnel shall actively participate in its development. Subcontractors and suppliers working on the project should also contribute in developing and maintaining an accurate Project Schedule. The approved Project Schedule shall be used to measure the progress of the work, to aid in evaluating time extensions, and to provide the basis of all progress payments.

3.2 BASIS FOR PAYMENT

The schedule shall be the basis for measuring Contractor progress. Lack of an approved schedule or scheduling personnel shall result in an inability of the Contracting Officer to evaluate Contractor progress for the purposes of payment. Failure of the Contractor to provide all information, as specified below, shall result in the disapproval of the entire Project Schedule submission and the inability of the Contracting Officer to evaluate Contractor progress for payment purposes. In the case where Project Schedule revisions have been directed by the Contracting Officer and those revisions have not been included in the Project Schedule, then the Contracting Officer may hold retainage up to the maximum allowed by contract, each payment period, until revisions to the Project Schedule have been made.

3.3 PROJECT SCHEDULE

The computer software system utilized by the Contractor to produce the Project Schedule shall be capable of providing all requirements of this specification. Failure of the Contractor to meet the requirements of this specification shall result in the disapproval of the schedule. Manual methods used to produce any required information shall require approval by the Contracting

Officer.

3.3.1 Use of the Critical Path Method

The Critical Path Method (CPM) of network calculation shall be used to generate the Project Schedule. The Contractor shall provide the Project Schedule in either the Precedence Diagram Method (PDM) or the Arrow Diagram Method (ADM).

3.3.2 Level of Detail Required

With the exception of the initial and preliminary schedule submission, the Project Schedule shall include an appropriate level of detail. Failure to develop or update the Project Schedule or provide data to the Contracting Officer at the appropriate level of detail, as specified by the Contracting Officer, shall result in the disapproval of the schedule. The Contracting Officer will use, but is not limited to, the following conditions to determine the appropriate level of detail to be used in the Project Schedule.

3.3.2.1 Activity Durations

Contractor submissions shall be required to follow the direction of the Contracting Officer regarding reasonable activity durations. Reasonable durations are those that allow the progress of activities to be accurately determined between payment periods. A rule of thumb, that the Contractor should use, is that less than 2 percent of all non-procurement activities' Original Durations shall be greater than 20 days.

3.3.2.2 Design and Permit Activities- The Contractor shall integrate design and permitting activities, including necessary conferences and follow-up actions and design package submission dates into the schedule if these items are applicable to the project.

3.3.2.3 Procurement Activities

Tasks related to the procurement of long lead materials or equipment shall be included as separate activities in the project schedule. Long lead materials and equipment are those materials that have a procurement cycle of over 90 days. Examples of procurement process activities include, but are not limited to: submittals, approvals, procurement, fabrication, delivery, installation, start-up, and testing.

3.3.2.4 Government Activities

Government and other agencies activities that could impact progress shall be shown. These activities include, but are not limited to: approvals, inspections, utility tie-in, Government

Furnished Equipment (GFE) and notice to proceed for phasing requirements.

3.3.2.5 Workers Per Day

All activities shall have an estimate of the average number of workers per day that are expected to be used during the execution of the activity to produce the expected completion date. If no workers are required for an activity, in the case of activities related to procurement, for example, then the activity shall be identified as using zero workers per day. The workers per day information for each activity shall be identified by the Workers Per Day Code.

3.3.2.6 Responsibility

All activities shall be identified in the project schedule by the party responsible to perform the work. Responsibility includes, but is not limited to, the subcontracting firm, contractor work force, or government agency performing a given task. Activities shall not belong to more than one responsible party. The responsible party for each activity shall be identified by the Responsibility Code.

3.3.2.7 Work Areas

All activities shall be identified in the project schedule by the work area in which the activity occurs. Activities shall not be allowed to cover more than one work area. The work area of each activity shall be identified by the Work Area Code.

3.3.2.8 Modification or Claim Number

Any activity that is added or changed by contract modification or used to justify claimed time shall be identified by a mod or claim code that changed the activity. Activities shall not belong to more than one modification or claim item. The modification or claim number of each activity shall be identified by the Mod or Claim Number.

3.3.2.9 Bid Item

All activities shall be identified in the project schedule by the Bid Item to which the activity belongs. An activity shall not contain work in more than one bid item. the bid item for each appropriate activity shall be identified by the Bid Item Code.

3.3.2.10 Phase of Work

All activities shall be identified in the project schedule by the phases of work in which the activity occurs. Activities shall not be allowed to contain work in more than one phase of work. The project phase of each activity shall be by the unique Phase of Work Code.

3.3.2.11 Category of Work All Activities shall be identified in the project schedule according to the category of work which best describes the activity. Category of work refers, but is not limited to, the procurement chain of activities including such items as submittals, approvals, procurement, fabrication, delivery, installation, start-up, and testing. The category of work for each activity shall be identified by the Category of Work Code.

3.3.2.12 Feature of Work

All activities shall be identified in the project schedule according to the feature of work to which the activity belongs. Feature of work refers, but is not limited to a work breakdown structure for the project. The feature of work for each activity shall be identified by the Feature of Work Code.

3.3.2.13 Critical Activities.

In addition to other activities as required to complete the project, the Progress schedule shall include the following as separate line activities:

a. Submission and approval of mechanical/electrical layout drawings.
b. Submission and approval of O & M Manuals.
c. Submission and approval of as-built drawings.
d. Submission and approval of 1354 data and installed equipment lists.
e. Submission and approval of HVAC Testing and Balancing plan.
f. HVAC Testing and Balancing and submission and approval of report.
g. Submission and approval of HVAC Commissioning plan.
h. HVAC Commissioning.
i. Other Systems testing as required.
j. Warranty Action Preparation
k. Pre-final inspection.
l. Correction of punchlist for pre-final inspection.
m. Final inspection.

3.3.2.14. HVAC Testing, Balancing and Commissioning. If this contract contains requirements for Heating, Ventilation and Air Conditioning Testing and Balancing and Commissioning, these activities must be allocated sufficient time and personnel resources by the Contractor so that they can be accomplished within time allowed for project completion. These activities are necessary to assure detection of any deficiencies in the HVAC Systems and avoid warranty callbacks. Included for guidance at the end of this section is a flow chart (Figures 1 and 2) showing major activities and their chronological relationship to each other and to the Notice to Proceed and

Contract Completion points. They are for guidance only - the Contractor shall refer to applicable specification sections for actual requirements for these activities.

3.3.3 Scheduled Project Completion

The schedule interval shall extend from notice-to-proceed to the contract completion date.

3.3.3.1 Project Start Date

The schedule shall start no earlier than the date that the Notice to Proceed (NTP) was acknowledged. The Contractor shall include as the first activity in the project schedule an activity called "Start Project". The "Start Project" activity shall have: a "ES" constraint, a constraint date equal to the date that the NTP was acknowledged, and a zero day duration.

3.3.3.2 Constraint of Last Activity

Completion of the last activity in the schedule shall be constrained by the contract completion date. Calculation on project updates shall be such that if the early finish of the last activity falls after the contract completion date, then the float calculation shall reflect a negative float on the critical path. The Contractor shall include as the last activity in the project schedule an activity call "End Project". The "End Project" activity shall have: a "LF" constraint, a constraint date equal to the completion date for the project, and a zero day duration.

3.3.3.3 Early Project Completion

In the event the project schedule shows completion, the project prior to the contract completion date, the Contractor shall identify those activities that have been accelerated and/or those activities that are scheduled in parallel to support the Contractor's "early" completion. Contractor shall specifically address each of the activities noted at every project schedule update period to assist the Contracting Officer to
evaluate the Contractor's ability to actually complete prior to the contract period.

3.3.4 Interim Completion Dates

Contractually specified interim completion dates shall also be constrained to show negative float if the early finish date of the last activity in that phase falls after the interim completion date.

3.3.4.1 Start Phase

The Contractor shall include as the first activity for a project phase an activity called "Start

Phase X" where "X" refers to the phase of work. The "Start Phase X" activity shall have: a "ES" constraint, a constraint date equal to the date that the NTP was acknowledged, and a zero day duration.

3.3.4.2 End Phase

The Contractor shall include as the last activity in a project phase an activity called "End Phase X" where "X" refers to the phase of work. The "End Phase X" activity shall have: a "LF" constraint, a constraint date equal to the completion date for the project, and a zero day duration.

3.3.4.3 Phase X

The Contractor shall include a hammock type activity for each project phase called "Phase X" where "X:" refers to the phase of work. The "Phase X" activity shall be logically tied to the earliest and latest activities in the phase.

3.3.5 Default Progress Data Disallowed

Actual Start and Finish dates shall not be automatically updated by default mechanisms that may be included in CPM scheduling software systems. Actual Start and Finish dates on the CPM schedule shall match those dates provided from Contractor Quality Control Reports. Failure of the Contractor to document the Actual Start and Finish dates on the Daily Quality Control report for every in progress or completed activity and insure that the data contained on the Daily Quality Control reports is the sole basis for schedule updating shall result in the disapproval of the Contractor's schedule and the inability of the Contracting Officer to evaluate Contractor progress for payment purposes.

3.3.6 Out-of-Sequence Progress

Activities that have posted progress without predecessors being completed (Out-of-Sequence Progress) shall be allowed only by the case-by-case approval of the Contracting Officer. The Contracting Officer may direct that changes in schedule logic be made to correct any or all out-of-sequence work.

3.3.7 Extended Non-Work Periods

Designation of Holidays to account for non-work periods of over 5 days shall not be allowed. Non-work periods of over 5 days shall be identified by addition of activities that represent the delays. Modifications to the logic of the project schedule shall be made to link those activities that may have been impacted by the delays to the newly added delay activities.

3.3.8 Negative Lags

Lag durations contained in the project schedule shall not have a negative value.

3.4 PROJECT SCHEDULE SUBMISSIONS

The Contractor shall provide the submissions as described below. The data disk, reports, and network diagrams required for each submission are contained in paragraph SUBMISSION REQUIREMENTS.

3.4.1 Preliminary Project Schedule Submission

The Preliminary Project Schedule, defining the Contractor's planned operations for the first 60 calendar days shall be submitted for approval within 10 calendar days after Notice to Proceed is acknowledged. The approved preliminary schedule shall be used for payment purposes not to exceed 60 calendar days after Notice to Proceed.

3.4.2 Initial Project Schedule Submission

The Initial Project Schedule shall be submitted for approval within 40 calendar days after Notice to Proceed. The schedule shall provide a reasonable sequence of activities which represent work through the entire project and shall be at a reasonable level of detail.

3.4.3 Periodic Schedule Updates

Based on the result of progress meetings, specified in "Periodic Progress Meetings," the Contractor shall submit periodic schedule updates. These submissions shall enable the Contracting Officer or to assess Contractor's progress. If the Contractor fails or refuses to furnish the information and project schedule data, which in the judgment of the Contracting Officer or authorized representative, is necessary for verifying the contractor's progress, the Contractor shall be deemed not to have provided an estimate upon which progress payment may be made.

3.4.4 Standard Activity Coding Dictionary

The Contractor shall submit, with the Initial Project Schedule, a coding scheme that shall be used throughout the project for all activity codes contained in the schedule. The coding scheme submitted shall list the values for each activity code category and translate those values into project specific designations. For example, a Responsibility Code Value, "ELE", may be identified as "Electrical Subcontractor." Activity code values shall represent the same

information throughout the duration of the contract. Once approved with the Initial Project Schedule submission, changes to the activity coding scheme must be approved by the Contracting Officer's Representative.

3.5 SUBMISSION REQUIREMENTS

The following items shall be submitted by the Contractor for the initial submission, and every periodic project schedule update throughout the life of the project:

3.5.1 Data Disks

Two data disks containing the project schedule shall be provided. Data on the disks shall be in the format specified in Appendix A, " Standard Data Exchange Format".

3.5.1.1 File Medium

Required data shall be submitted on 3.5 disks, formatted to hold 1.44 MB of data, under the MS-DOS Version 5.0 operating system.

3.5.1.2 Disk Label

A permanent exterior label shall be affixed to each disk submitted. The label shall indicate the type of schedule (Initial, Update, or Change), full contract number, project name, project location, data date, name and telephone number or person responsible for the schedule, and the MS-DOS version used to format the disk.

3.5.1.3 File Name

Each file submitted shall have a name related to either the schedule data date, project name, or contract number. The Contractor shall develop a naming convention that will insure that the names of the files submitted are unique. the Contractor shall submit the file naming convention to the Contracting Officer for approval.

3.5.2 Narrative Report

A Narrative Report shall be provided with each update of the project schedule. This report shall be provided as the basis of the Contractor's progress payment request. The Narrative Report shall include: a description of activities along the 4 most critical paths, a description of current and anticipated problem areas or delaying factors and their impact, and an explanation of corrective actions taken.

3.5.3 Approved Changes Verification

Only project schedule changes that have been previously approved by the Contracting Officer shall be included in the schedule submission. The Narrative Report shall specifically reference, on an activity by activity basis, all changes made since the previous period and relate each change to documented, approved schedule changes.

3.5.4 Schedule Reports

The format for each activity for the schedule reports listed below shall contain: Activity Numbers, Activity Description, Original Duration, Remaining Duration, Early Start Date, Early Finish Date, Late Start Date, Late Finish Date, Total Float. Actual Start and Actual Finish Dates shall be printed for those activities in-progress or completed.

3.5.4.1 Activity Report

A list of all activities sorted according to activity number or "I-NODE" AND "J-NODE" and then sorted according to Early Start Date. For completed activities the Actual Start Date shall be used as the secondary sort.

3.5.4.2 Logic Report

A list of Preceding and Succeeding activities for every activity in ascending order by activity number and then sorted according to Early Start Date. For completed activities the Actual Start Date shall be used as the secondary sort.

3.5.4.3 Total Float Report

A list of all activities sorted in ascending order of total float. Activities which have the same amount of total float shall be listed in ascending order of Early Start Dates.

3.5.4.4 Earnings Report

A compilation of the Contractor's Total Earnings on the project from the Notice to Proceed until the most recent Monthly Progress Meeting. This report shall reflect the Earnings of specific activities based on the agreements made in the field and approved between the Contractor and Contracting Officer at the most recent Monthly Progress Meeting. Provided that the Contractor has provided a complete schedule update, this report shall serve as the basis of determining Contractor Payment. Activities shall be grouped by bid item and sorted by activity numbers. This report shall: sum all activities in a bid item and provide a bid item

percent; complete and sum all bid items to provide a total project percent complete. The printed report shall contain, for each activity: [Activity Number] [or] ["i-node" and "j-node"], Activity Description, Original Budgeted Amount, Total Quantity, Quantity to Date, Percent Complete (based on cost), Earnings to Date.

3.5.4.5 Labor Loading.

For each activity shown on the logic report list the total amount of work required for the activity in man-hours, the number of workers assigned to the activity, the expected production rate for a worker, and the length of time (in work days) required to render the expected completion date for the activity. Completion dates on this report must agree with those on the logic report.

3.5.5 Network Diagram

The network diagram shall be required on the initial schedule submission and on bi-monthly (60 days) schedule update submissions. In addition to other submission requirements, a single mylar reproduceable 20 inch by 30 inch size shall be submitted. The diagram shall also The network diagram shall depict and display the order and interdependence of activities and the sequence in which the work is to be accomplished. The Contracting Officer will use, but is not limited to, the following conditions to review compliance with this paragraph:

3.5.5.1 Continuous Flow

Diagrams shall show a continuous flow from left to right with no arrows from right to left. The activity or event number, description, duration, and estimated earned value shall be shown on the diagram.

3.5.5.2 Project Milestone Dates

Dates shall be shown on the diagram for start of project, any contract required interim completion dates, and contract completion dates.

3.5.5.3 Critical Path

The critical path shall be clearly shown.

3.5.5.4 Banding

Activities shall be grouped to assist in the understanding of the activity sequence. Typically, this flow will group activities by category of work, work area and/or responsibility.

3.5.5.5 S-Curves

Earnings curves showing projected early and late earnings and earnings to date.

3.6 PERIODIC PROGRESS MEETINGS

Progress meetings to discuss payment shall include a monthly on- site meeting or other regular intervals mutually agreed to at the preconstruction conference. During this meeting the Contractor will describe, on an activity by activity basis, all proposed revisions and adjustments to the project schedule required to reflect the current status of the project. The Contracting Officer will approve activity progress, proposed revisions, and adjustments as appropriate.

3.6.1 Meeting Attendance

The Contractor's Project Manager and Scheduler shall attend the regular progress meeting.

3.6.2 Update Submission Following Progress Meeting

A complete update of the project schedule containing all approved progress, revisions, and adjustments, based on the regular progress meeting, shall be submitted not later than 4 working days after the monthly progress meeting. Update shall include a minimum of (16) 8 x 10 color photos showing construction progress. Photos shall be in hard copy and hi-resolution electronic format as (pdf) and (jpg) files on compact disk (CD).

3.6.3 Progress Meeting Contents

Update information, including Actual Start Dates, Actual Finish Dates, Remaining Durations, and Cost to Date shall be subject to the approval of the Contracting Officer. The following minimum set of items which the Contractor shall address, on an activity by activity basis, during each progress meeting.

3.6.3.1 Start and Finish Dates

The Actual Start and Actual Finish dates for each activity currently in-progress or completed activities.

3.6.3.2 Time Completion

The estimated Remaining Duration for each activity in-progress. Time-based progress calculations must be based on Remaining Duration for each activity.

3.6.3.3 Cost Completion

The earnings for each activity started. Payment shall be based on earnings for each in-progress or completed activity. Payment for individual activities shall not be made for work that contains quality defects. A portion of the overall project amount may be retained based on delays of activities.

3.6.3.4 Logic Changes

All logic changes pertaining to Notice to Proceed on change orders, change orders to be incorporated into the schedule, contractor proposed changes in work sequence, corrections to schedule logic for out-of-sequence progress, [lag durations,] and other changes that have been made pursuant to contract provisions shall be specifically identified and discussed.

3.6.3.5 Other Changes

Other changes required due to delays in completion of any activity or group of activities are those delays beyond the Contractors control such as strikes and unusual weather. Also included are delays encountered due to submittals, Government Activities, deliveries or work stoppage which makes re-planning the work necessary, and when the schedule does not represent
the actual prosecution and progress of the work.

3.7 REQUESTS FOR TIME EXTENSIONS

In the event the Contractor requests an extension of the contract completion date, he shall furnish such justification, project schedule data and supporting evidence as the Contracting Officer may deem necessary for a determination as to whether or not the Contractor is entitled to an extension of time under the provisions of the contract. Submission of proof of delay, based on revised activity logic, duration, and costs (updated to the specific date that the delay occurred) is obligatory to any approvals.

3.7.1 Justification of Delay

The project schedule must clearly display that the Contractor has used, in full, all the float time available for the work involved with this request. The Contracting Officer's determination as to the number of allowable days of contract extension, shall be based upon the project schedule updates in effect for the time period in question and other factual information. Actual delays that are found to be caused by the Contractor's own actions, which result in the extension of the schedule, shall not be a cause for a time extension to the contract completion date.

3.7.2 Submission Requirements

The Contractor shall submit a justification for each request for a change in the contract completion date of under two weeks based upon the most recent schedule update at the time of the Notice to Proceed or constructive direction issued for the change. Such a request shall be in accordance with the requirements of other appropriate Contract Clauses and shall include, as a minimum:

a. A list of affected activities, with their associated project schedule activity number.

b. A brief explanation of the causes of the change.

c. An analysis of the overall impact of the changes proposed.

d. A sub-network of the affected area.

Activities impacted in each justification for change shall be identified by a unique activity code contained in the required data file.

3.7.3 Additional Submission Requirements

For any request for time extension for over 2 weeks, the Contracting Officer may request an interim update with revised activities for a specific change request. The Contractor shall provide this disk within 4 days of the Contracting Officer's request.

3.8 DIRECTED CHANGES

If Notice to Proceed (NTP) is issued for changes prior to settlement of price and/or time, the Contractor shall submit proposed schedule revisions to the Contracting Officer within 2 weeks of the NTP being issued. The proposed revisions to the schedule will be approved by the Contracting Officer prior to inclusion of those changes within the project schedule. If the Contractor fails to submit the proposed revisions, the Contracting Officer may furnish the Contractor suggested revisions to the project schedule. The Contractor shall include these revisions in the project schedule until the Contractor submits revisions, and final changes and impacts have been negotiated. If the Contractor has any objections to the revisions furnished by the Contracting Officer, then the Contractor shall advise the Contracting Officer within 2 weeks of receipt of the revisions. Regardless of the objections, the Contractor will continue to update their schedule with the Contracting Officer's revisions until a mutual agreement in the revisions may be made. If the Contractor fails to submit
alternative revisions within 2 weeks of receipt of the Contracting Officer's proposed revisions, the Contractor will be deemed to have concurred with the Contracting Officer's proposed revisions. The proposed revisions will then be the basis for an equitable adjustment for

performance of the work.

3.9 OWNERSHIP OF FLOAT

Float available in the schedule, at any time, shall not be considered for the exclusive use of either the Government or the Contractor.

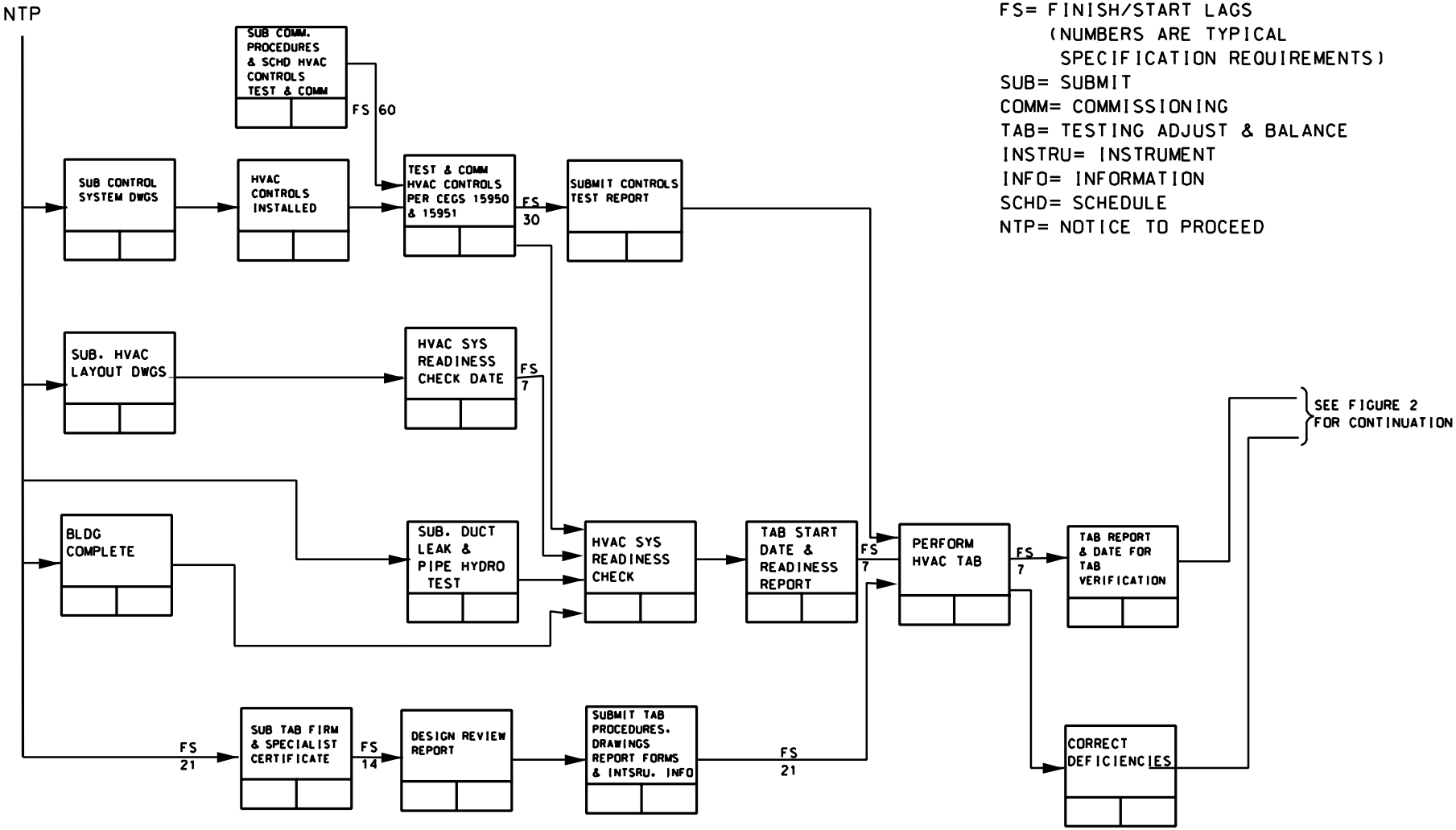

FIGURE 1

FLOW CHART FOR HVAC TESTING, BALANCING AND COMMISSIONING

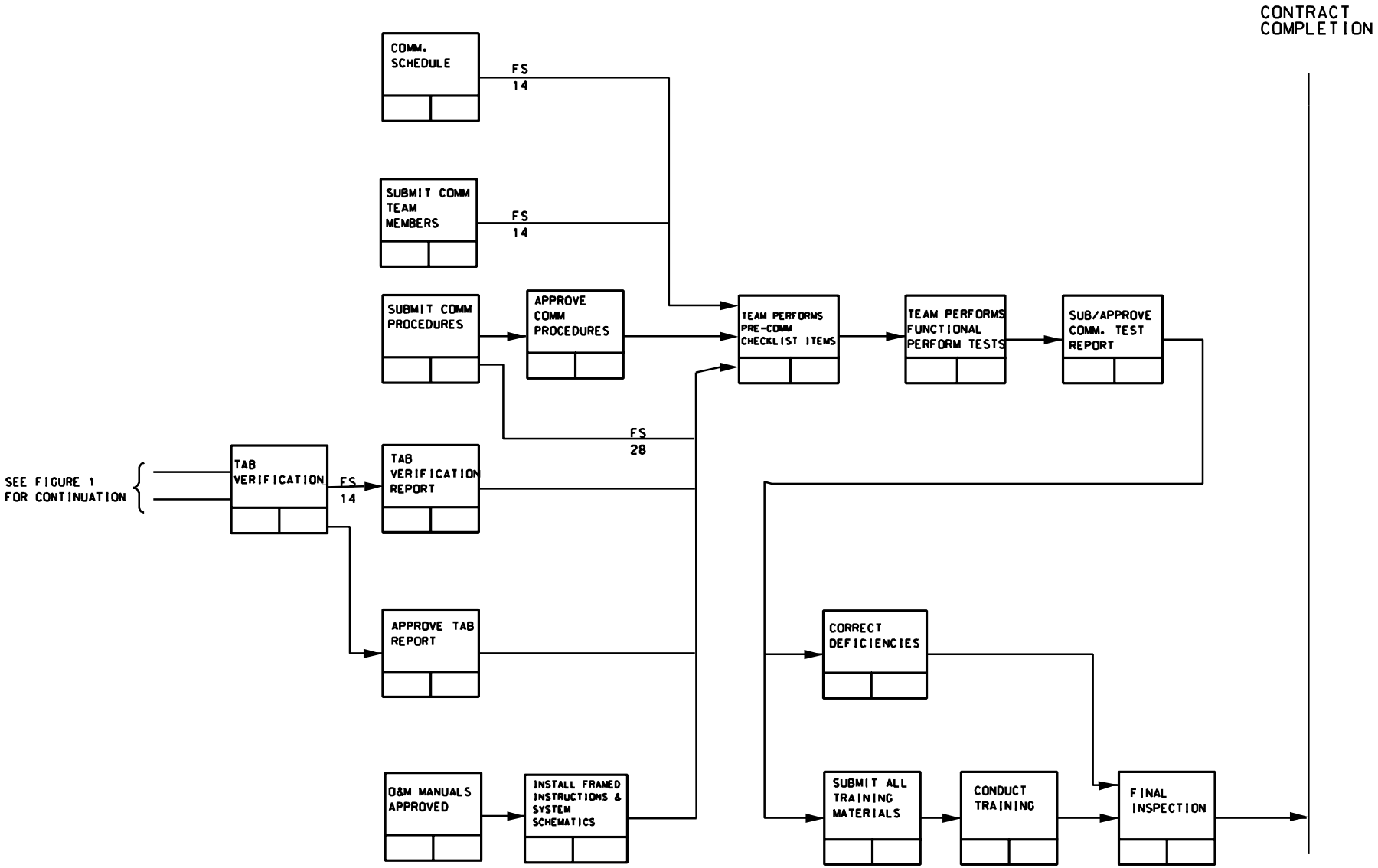

FIGURE 2

FLOW CHART FOR HVAC TESTING, BALANCING AND COMMISSIONING

STANDARD DATA EXCHANGE FORMAT SPECIFICATION

PART 1- GENERAL

1. Application of This Provision: The Standard Data Exchange Format (SDEF) provides a non-proprietary protocol to exchange project planning and progress data between scheduling systems.

2. File Type and Format: The data file shall consist of a 132 character, freed format, "ASCII" file. Text shall be left-justified and numbers shall be right-justified in each field. Data records must conform, exactly, to the sequence, column position, maximum length, mandatory values, and field definitions described below to comply with the SDEF. Unless specifically stated, all numbers shall be whole numbers. Fields containing numbers shall not be zero filled. All data columns shall be separated by a single blank column. The file shall not contain blank lines.

3. Usage Notes: Where appropriate, notes regarding proper usage of systems to support the SDEF have been included in brackets ([ ]). These notes are included to assist users in creating SDEF-compatible files, given the variety of software systems that support the SDEF.

4. Recommended Systems: Several systems have been tested to determine the accuracy of importing and exporting SDEF files. For information on the current list of recommended systems, please contact Mr. Stan Green at HQUSACE, (202) 761-0206. Although the currently listed system have been tested other systems may also be acceptable provided those systems correctly import and export SDEF files.

5. SDEF Checker Program: A program that checks whether a file meets the SDEF is available free of charge. A copy of this program may be obtained by written request to: U.S. Army Corps of Engineers, ATTN: Mr. Bill East (CECER-FFA), P.O. Box 9005, Champaign, IL 61826-90005. A description of the SDEF Checker is also available on the Internet and CivilNet.

PART 2- SDEF SPECIFICATION

6. SDEF Organization: The SDEF shall consist of the following records provided in the exact sequence shown below:

Paragraph Reference	Record Description	Remarks
6.a	Volume Record	Mandatory First Line of File
6.b	Project Record	Mandatory Second Line of File
6.c	Calendar Record(s)	Mandatory One Record Minimum
6.d	Holiday Record(s)	Mandatory if Holidays Used
6.e	Activity Record(s)	Mandatory Records
6.f	Precedence Record(s)	Mandatory for Precedence
6.g	Unit Cost Record(s)	Mandatory for Unit Costs
6.h	Progress Record(s)	Mandatory Records
6.i	File End Record	Mandatory Last Line of Disk/File

6.a. Volume Record: The Volume Record shall be used to control the transfer of data that may not fit on a single disk. The first line in every file used to store SDEF data shall be the Volume Record. The Volume Record shall sequentially identify the number of the data transfer disk(s). The Volume Record shall have the following format:

Description	Column Position	Max. Len.	Req. Value	Type	Notes
RECORD IDENTIFIER	1 -4	4	VOLM	Fixed	Filled
DISK NUMBER	6 -7	2	√	Number	Right Justified

6.a.(l) The RECORD IDENTIFIER is the first four characters of this record. The required value for this field shall be “VOLM”. The VOLM record must appear on the first line of the SDEF data file.

6.a.(2) The DISK NUMBER field shall identify the number of the data disk used to store the data exchange information. If all data may be contained on a single disk, this field shall contain the value of “l”. If more disks are required, then the second disk shall contain the value “2”, the third disk shall be designated with a “3”, and so on. Identification of the last data disk is accomplished in the Reject End Record.

6.b. Project Record: The Project Identifier Record shall contain general project information. Because more than one SDEF file may be required for data transfer between large projects, the PROJ record shall be the second line of the first SDEF file transferred. The PROJ record shall contain information in the following format:

Description	Column Position	Max. Len.	Req. Value	Type	Notes
RECORD IDENTIFIER	1 - 4	4	PROJ	Fixed	Filled
DATA DATE	6 - 12	7	√	ddmmmyy	Filled
PROJECT IDENTIFIER	14 -17	4	√	Alpha.	Left Justified
PROJECT NAME	19 - 66	48	√	Alpha.	Left Justified
CONTRACTOR NAME	68 - 103	36	√	Alpha.	Left Justified
ARROW OR PRECEDENCE	105 - 105	1	A,P	Fixed	Filled
CONTRACT NUMBER	107 - 112	6	√	Alpha.	Left Justified
PROJECT START	114 - 120	7	√	ddmmmyy	Filled
PROJECT END	122 - 128	7	√	ddmmmyy	Filled

6.b.(1) The RECORD IDENTIFIER is the first four characters of this record. The required value for this field shall be “PROJ”. This record shall contain the general project information and indicates which scheduling method shall be used.

6.b.(2) The DATA DATE is the date of the schedule calculation. The abbreviation “ddmmmyy” refers to a date format that shall translate a date into two numbers for the day, three letters for the month, and two numbers for the year. For example, March 1, 1999 shall be translated into OlMar99. This same convention for date formats shall be used throughout the entire data format. To ensure that dates are translated consistently, the following abbreviations shall be used for the three character month code:

Abbreviation	Month
JAN	January
FEB	February
MAR	March
APR	April
MAY	May
JUN	June
JUL	July
AUG	August
SEP	September
OCT	October
NOV	November
DEC	December

6.b.(3) The PROJECT IDENTIFIER is a maximum four character abbreviation for the schedule. These four characters shall be used to uniquely identify the project and specific update as agreed upon by Contractor and Contracting Officer. When utilizing scheduling software these four characters shall be used to select the project. Software manufacturers shall provide information to users to ensure that data importing programs do not automatically overwrite other schedules with the same PROJECT IDENTIFIER.

6.b.(4) The PROJECT NAME field shall contain the name and location of the project edited to fit the space provided. The data appearing here shall appear on scheduling software reports. The abbreviation “Alpha.” refers to an “Alphanumeric” field value and shall be used throughout the remainder of this specification.

6.b.(5) The CONTRACTOR NAME field shall contain the Construction Contractor’s name, edited to fit the space provided.

6.b.(6) The ARROW OR PRECEDENCE field shall indicate which method shall be used for calculation of the schedule. The value “A” shall signify the Arrow Diagramming Method. The value “P” shall signify the Precedence Diagramming Method. The ACTIVITY ID field of the Activity Record shall be interpreted differently depending on the value of this field. The Precedence Record shall be required if the value of this field is “P”. [Usage note: software systems may not support both arrow and precedence diagramming. It is recommended that the selection of the type of network be based on the capabilities of the software used by project partners.]

6.b.(7) The CONTRACT NUMBER field shall contain the contract number for the project. For example, the construction contract number DACA85-89-C-0001 shall be entered into this field as “890001”.

6.b.(8) The PROJECT START field shall contain the date that the Contractor acknowledges the Notice to Proceed (NTP). [Usage note: Software systems may use a project start date to constrain the first activity of a network. To ensure consistent scheduling calculations across products, it is recommended that the first activity in the schedule contain an EARLY START constraint and a software system’s PROJECT START date only be used to report on the project’s start date.]

6.b.(9) The PROJECT END field shall contain the date that the Contractor plans to complete the work as approved by the Contracting Officer. [Usage note: software systems may use a project end date to constrain the last activity of a network. To ensure consistent scheduling calculations across products, it is recommended that the last activity in the schedule contain an EARLY START constraint and a software system’s PROJECT END date only be used to report on the project’s end date.]

6.c. Calendar Record: The Calendar Record(s) shall follow the Project Identifier Record in the first disk of data transferred. A minimum of one Calendar Record shall be required for all data exchange activity files. The format for the Calendar Record shall be as follows:

Description	Column Position	Max. Len.	Req. Value	Type	Notes
RECORD IDENTIFIER	1 - 4	4	CLDR	Fixed	Filled
CALENDAR CODE	6 - 6	1	√	Alpha.	Filled
WORKDAYS	8 -14	7	SMTWTFS	Fixed	Filled
CALENDAR DESCRIPTION	16 - 45	30	√	Alpha.	Left Justified

6.c.(1) The RECORD IDENTIFIER shall always begin with “CLDR” to identify it as a Calendar Record. Each Calendar Record used shall have this identification in the first four columns. [Usage note: Systems contain a variety of calendar options. It is recommended that the least common denominator of calendar features between the systems be used as the basis for creating the SDEF file for a given project.]

6.c.(2) The CALENDAR CODE shall be used in the activity records to signify that this calendar is associated with the activity. [Usage note: Some systems do not allow for alphanumeric CALENDAR CODES, but only allow positive integers from 1 to 9. It is recommended that only positive integers be used for the CALENDAR CODE field to support the widest variety of scheduling systems.]

6.c.(3) The WORKDAYS field shall contain the work-week pattern selected with “Y”, for Yes, and “N”, for No. The first character shall be Sunday and the last character Saturday. An example of a typical five (5) day work-week would be NYYYYYN. A seven (7) day work-week would be YYYYYYY.

6.c.(4) The CALENDAR DESCRIPTION shall be used to briefly describe the calendar used.

6.d. Holiday Record: The Holiday Record(s) shall follow the Calendar Record(s) in the first disk of data transferred. There may be calendars without any holidays designated or several Holiday Records for each Calendar Record(s). The format for the Holiday Record shall be as follows:

Description	Column Position	Max. Len.	Req. Value	Type	Notes
RECORD IDENTIFIER	1 – 4	4	HOLI	Fixed	Filled
CALENDAR CODE	6 – 6	1	√	Alpha.	Filled
HOLIDAY DATE	8 – 14	7	-	ddmmmyy	May be Filled
HOLIDAY DATE	16 – 22	7	-	ddmmmyy	May be Filled
HOLIDAY DATE	24 – 30	7	-	ddmmmyy	May be Filled
HOLIDAY DATE	32 – 38	7	-	ddmmmyy	May be Filled
HOLIDAY DATE	40 – 46	7	-	ddmmmyy	May be Filled
HOLIDAY DATE	48 – 54	7	-	ddmmmyy	May be Filled
HOLIDAY DATE	56 – 62	7	-	ddmmmyy	May be Filled
HOLIDAY DATE	64 – 70	7	-	ddmmmyy	May be Filled
HOLIDAY DATE	72 – 78	7	-	ddmmmyy	May be Filled
HOLIDAY DATE	80 – 86	7	-	ddmmmyy	May be Filled
HOLIDAY DATE	88 – 94	7	-	ddmmmyy	May be Filled
HOLIDAY DATE	96 – 102	7	-	ddmmmyy	May be Filled
HOLIDAY DATE	104 – 110	7	-	ddmmmyy	May be Filled
HOLIDAY DATE	112 – 118	7	-	ddmmmyy	May be Filled
HOLIDAY DATE	120 – 126	7	-	ddmmmyy	May be Filled

6d.(1) The RECORD IDENTIFIER shall always begin with “HOLI”. Each Holiday Record used shall have this identification in the first four columns.

6.d.(2) The CALENDAR CODE indicates which work-week calendar the holidays shall be applied to. More than one HOLI record may be used for a given CALENDAR CODE.

6.d.(3) The HOLIDAY DATE shall contain the date of each individual non-work day.

6.e. Activity Records: Activity Records shall follow any Holiday Record(s). If there are no Holiday Record(s), then the Activity Records shall follow the Calendar Record(s). There shall be one Activity Record for every activity in the network. Each activity shall have one record in the following format:

Description	Column Position	Max. Len.	Req. Value	Type	Notes
RECORD IDENTIFIER	1 – 4	4	ACTV	Fixed	Filled
ACTIVITY ID	6 – 15	10	√	Integer	See Comment Below
ACTIVITY DESCR.	17-46	30	√	Alpha.	Left Justified
ACTIVITY DURATION	48-50	3	√	Integer	Right Justified
CONSTRAINT DATE	52-58	7		ddmmmy	May be Filled
CONSTRAINT TYPE	60-61	2		ES or LF	May be Filled
CALENDAR CODE	63-63	1	√	Alpha.	Filled
HAMMOCK CODE	65-65	1	Y, blank	Fixed	May be Filled
WORKERS PER DAY	67-69	3		Integer	Right Justified
RESPONSIBILITY CODE	71-74	4		Alpha.	Left Justified
WORK AREA CODE	76-79	4		Alpha.	Left Justified
MOD OR CLAIM NO.	81-86	6		Alpha.	Left Justified
BID ITEM	88-93	6		Alpha.	Left Justified
PHASE OF WORK	95-96	2		Alpha.	Left Justified
CATEGORY OF WORK	98-98	1		Alpha.	May be Filled
FEATURE OF WORK	100-128	30		Alpha.	Left Justified

6.e.(1) The RECORD IDENTIFIER for each activity description record must begin with the four character “ACTV” code. This field shall be used for both the Arrow Diagram Method (ADM) and Precedence Diagram Method (PDM),

6.e.(2) The ACTIVITY ID consists of coding that shall differ, depending on whether the ADM or PDM method was selected in the Project Record. If the ADM method was selected then the field shall be interpreted as two right-justified fields of five (5) integers each. If the PDM method was selected the field shall be interpreted as one (1) right-justified field of ten (10) integers each. The maximum activity number allowed under this arrangement is 99999 for ADM and 9999999999 for the PDM method. [Usage note: Many systems allow alphanumeric ACTIVITY IDs. While the SDEF does not strictly, allow the use of alphanumeric values, users may agree to use the ACTIVITY ID field to exchange alphanumeric data. It is recommended that the ACTIVITY ID be restricted to integers when one or more of the systems being used for scheduling allows only integer ACTIVITY ID values.]

6.e.(3) The ACTIVITY DESCRIPTION shall be a maximum of 30 characters. Descriptions must be limited to the space provided.

6.e.(4) The ACTIVITY DURATION contains the estimated original duration for the activity on the schedule. The duration shall be based upon the work-week designated by the activity’s related calendar.

6.e.(5) The CONSTRAINT DATE field shall be used to identify a date that the scheduling system may use to modify float calculations. If there is a date in this field, then there must be a valid entry in the CONSTRAINT TYPE field.

6.e.(6) The CONSTRAINT TYPE field shall be used to identify the way that the scheduling system shall use the CONSTRAINT DATE to modify schedule float calculations. If there is a value in this field, then there must be a valid entry in the CONSTRAINT DATE field. The valid values for the CONSTRAINT TYPE are as follows:

Code	Definition
ES	The CONSTRAINT DATE shall replace an activity's early start date, if the early start date is prior to the CONSTRAINT DATE.
LF	The CONSTRAINT DATE shall replace an activity's late finish date, if the late finish date is after the CONSTRAINT DATE.

[Usage note: Systems provide a wide variety of constraint types that may not be supported by other systems. It is recommended that constraint types be restricted to the values above regardless of the capabilities of the various systems being used for scheduling.]

6.e.(7) The CALENDAR CODE relates this activity to an appropriate work-week calendar. The ACTIVITY DURATION must be based on the valid work-week referenced by this CALENDAR CODE field.

6.e.(8) The HAMMOCK CODE indicates that a particular activity does not have its own independent duration, but takes its start dates from the start date of the preceding activity (or node) and takes its finish dates from the finish dates of its succeeding activity (or node). If the value of the HAMMOCK CODE field is "Y", then the activity is a hammmock activity.

6.e.(9) The WORKERS PER DAY shall contain the average number of workers expected to work on the activity each day the activity is in progress. If this code is required by project scheduling specifications, values for this data will be right justified. Activities without workers per day shall have a value of "0".

6.e.(10) The RESPONSIBILITY CODE shall identify the subcontractors or major trade involved with completing the work for the activity. If this code is required by project scheduling specifications, value for this data will be left justified.

6.e.(11) The WORK AREA CODE shall identify the location of the activity within the project. If this code is required by project scheduling specifications, value for this data will be left justified.

6.e.(12) The MOD OR CLAIM NUMBER shall uniquely identify activities that are added or changed on a construction contract modification, or activities that justify any claimed time extensions. If this code is required by project scheduling specifications, value for this data will be left justified.

6.e.(13) The BID ITEM shall identify the bid item number associated with each activity. If this code is required by project scheduling specifications, value for this data will be left justified.

6.e.(14) The PHASE OF WORK shall identify the timing of a specific activity within the entire project. If this code is required by project scheduling specifications, value for this data will be left justified.

6.e.(15) The CATEGORY OF WORK shall identify the general type of work performed by every activity. If this code is required by project scheduling specifications, value for this data will be placed in the field.

6.e.(16) The FEATURE OF WORK shalI identify a very broad designation of the general type of work that is being accomplished by the activity. If this code is required by project scheduling specifications, value for this data will be left justified. [Usage note: Many systems require that FEATURE OF WORK values be placed in several activity code fields. It is recommended that users review SDEF documentation to determine the correct way to use a given software system to produce the FEATURE OF WORK code.]

6.f. Precedence Record: The Precedence Record(s) shall follow the Activity Records if a Precedence Diagram Method schedule (PDM) is identified in the ARROW OR PRECEDENCE field of the Project Record. The Precedence Record has the following format:

Description	Column Position	Max. Len.	Req. Value	Type	Notes
RECORD IDENTIFIER	1 – 4	4	PRED	Fixed	Filled
ACTIVITY ID	6 – 15	10	√	Integer	See Comment Below
PRECEDING ACTIVITY	17-26	10	√	Integer.	See Comment Below
PREDECESSOR TYPE	28-28	1	√	S, F, C	Filled
LAG DURATION	30-33	4	√	Integer	Right Justified

6.f.(1) The RECORD IDENTIFIER shall begin with the four characters “PRED” in the first four columns of the record.

6.f.(2) The ACTIVITY ID identifies the activity whose predecessor shall be specified in this record.

6.f.(3) The PRECEDING ACTIVITY number is the number of an activity that precedes the activity noted in the ACTIVITY ID field.

6.f.(4) The PREDECESSOR TYPE field indicates the type of relation that exists between the chosen pair of activities. Valid PREDECESSOR TYPE fields areas follows:

Code	Definition
S	Start-to-Start relation
F	Finish-to-Finish relation
C	Finish-to-Start relation

[Usage note: Some systems provide additional predecessor types that may not be supported by all other systems. It is recommended that predecessor types be restricted to the values above regardless of the capabilities of the various systems being used for scheduling.]

6.f.(5) The LAG DURATION field contains the number of days delay between the preceding and current activity. [Usage note: Some systems allow negative values for the LAG DURATION. Because these values are not supported by all other systems, it is recommended that values be restricted to zero and positive integers.]

6.g. Unit Cost Record: The Unit Cost Record shall follow all Precedence Records. If the schedule utilizes the Arrow Diagram Method, then the Unit Cost Record shall follow any Activity records. There shall be one Unit Cost Record for every activity that is not a lump sum activity. [Usage note: (1) It is recommended that users who wish to exchange unit cost data contact SDEF vendor representatives to determine the ability of the software system to import/export unit cost information. (2) If the software being used by each member of the project team supports unit cost data then users may wish to conduct a trial run of the SDEF data exchange with a two or three-activity network to ensure that unit cost data transfers as expected. If problems are found please consult vendor representatives for resolution prior to exchange of full project schedules. (3) Unit cost record data does not, in most systems, result in the correct values being placed in the ACTIVITY COST and COST TO DATE fields of the Progress (PROG) Record. Users must, at this time, manually transfer the data from the Unit Cost Record to the Progress Record.

The fields for this record shall take the following format:

Description	Column Position	Max. Len.	Req. Value	Type	Notes
RECORD IDENTIFIER	1 – 4	4	UNIT	Fixed	Filled
ACTIVITY ID	6 – 15	10	√	Integer	Right Justified
TOTAL QTY	17-29	13	√	Format 8.4	Right Justified
COST PER UNIT	31- 43	13	√	Format 8.4	Right Justified
QTY TO DATE	45 –57	13	√	Format 8.4	Right Justified
UNIT OF MEASURE	59 – 61	3	√	Alpha.	Left Justified

6.g.(1) The RECORD IDENTIFIER shall be identified with the four characters ‘UNIT” placed in the first four columns of the record.

6.g.(2) The ACTIVITY ID for each activity shall match the format described in the activity record. Each activity may have only one Unit Cost Record.

6.g.(3) The TOTAL QTY is the total amount of material to be used in this activity. This number consists of eight digits, one decimal point and four more digits. An example of a number in this format is “11111111.1111”. If decimal places are not needed this field shall still contain a “.0000” in columns 25-29. [Usage note: Many systems support a different format for this value that does not include as many decimal places. It is recommended that users determine their requirements for significant digits based on the lowest common denominator of the software systems being used for a given project.]

6.g.(4) The COST PER UNIT is the cost, in dollars and cents, for each unit to be used in this activity. This number consists of eight digits, one decimal point, and four more digits. An example of a number in this format is “11111111.1111”. If decimal places are not needed this field shall still contain a “.0000” in columns 39-43. [Usage note: Many systems support a different format for this value that does not include as many decimal places. It is recommended that users determine their requirements for significant digits based on the lowest common denominator of the software systems being used for a given project.]

6.g.(5) The QTY TO DATE is the quantity of material installed in this activity up to the data date. This number consists of eight digits, one decimal point, and four more digits. An example of a number in this format is “11111111.1111”. If decimal places are not needed this field shall still contain a “.0000” in columns 53-57. [Usage note: Many systems support a different format for this value that does not include as many decimal places. It is recommended that users determine their requirements for significant digits based on the lowest common denominator of the software systems being used for a given project.]

6.g.(6) The UNIT OF MEASURE is an abbreviation that may be used to describe the units being measured for this activity. Valid values for this field are any meaningful English or metric unit, except “LS” for Lump Sum. Lump Sum activities are not to have Unit Cost Records.

6.h. Progress Record: Progress Record(s) shall follow all Unit Cost Record(s). If there are no Unit Cost Record(s), then the Progress Record(s) shall follow all Precedence Records. If the schedule utilizes the Arrow Diagram Method, then the Progress Record shall follow any Activity Records. One Progress Record is required for every activity in the Activity Record. The fields for this Record shall be provided in the following format:

Description	Column Position	Max. Len.	Req. Value	Type	Notes
RECORD IDENTIFIER	1 – 4	4	PROG	Fixed	Filled
ACTIVITY ID	6 – 15	10	√	Integer	See Comment Below
ACTUAL START DATE	17 – 23	7	√	ddmmmyy	Filled if Started
ACTUAL FINISH DATE	25 – 31	7	√	ddmmmyy	Filled if Finished
REMAINING DURATION	33 – 35	3	√	Integer	Right Justified
ACTIVITY COST	37 – 48	12	√	Format 9.2	Right Justified
COST TO DATE	50 – 61	12	√	Format 9.2	Right Justified
STORED MATERIAL	63 – 74	12	√	Format 9.2	Right Justified
EARLY START DATE	76 – 82	7	√	ddmmmyy	Filled if Not Started
EARLY FINISH DATE	84 – 90	7	√	ddmmmyy	Filled if Not Finished
LATE START DATE	92 – 98	7	√	ddmmmyy	Filled if Not Started
LATE FINISH DATE	100 – 106	7	√	ddmmmyy	Filled if Not Finished
FLOAT SIGN	108 – 108	1	+, –	Fixed	Filled if Not Finished
TOTAL FLOAT	110 – 112	3	√	Integer.	R. Just. if Not Finished

6.h.(1) The RECORD IDENTIFIER shall begin with the four characters “PROG” in the first four columns of the record.

6.h.(2) The ACTIVITY ID for each activity for which progress has been posted shall match the format described in the Activity Record.

6.h.(3) An ACTUAL START DATE is required for alI in-progress activities. The ACTUAL START DATE shall be the same as, or later than, the PROJECT START date contained in the Project Record. The ACTUAL START DATE shall also be the same as, or prior to, the DATA DATE contained in the Project Record. If there is an ACTUAL START DATE for an activity that there must also be a REMAINING DURATION, and the values for the EARLY START DATE and LATE START DATE are blank. [Usage note: Some systems allow default values for ACTUAL START DATE if the date is not entered by the user. Because the failure to include a start date for activities may result in different schedule calculations, it is recommended that the ACTUAL START DATE be required for all activities in progress.]

6.h.(4) An ACTUAL FINISH DATE is required for all completed activities. If the REMAINING DURATION of an activity is zero, then there must be an ACTUAL FINISH DATE. If there is an ACTUAL FINISH DATE, then values for the EARLY START DATE, LATE START DATE, EARLY FINISH DATE, LATE FINISH DATE, FLOAT SIGN, and TOTAL FLOAT shall be blank. [Usage note: Some systems allow default values for ACTUAL FINISH DATE if the date is not entered by the user. Because the failure to include a finish date for activities may result in different schedule calculations, it is recommended that the ACTUAL FINISH DATE be required for all activities in progress.]

6.h.(5)A REMAINING DURATION is required for all activities. Activities that have not started shall have a remaining duration equal to their original duration. Activities completed based G DURATION. [Usage note: Systems have a variety of on time, shall have a zero (0) REMAININ DURATION value. It is recommended that users “short-cut” methods to determine the REMAINING actually consider the time required to complete the remaining work on a given task, rather than allow a system to calculate the remaining duration based on the amount of work that has already been accomplished.]

6.h.(6) The ACTIVITY COST contains the estimated earned value of the work to be accomplished in the activity. An example of a number in this format is “1111111 11.11”. If decimal places are not needed this field shall still contain a “.00” in the last three columns of this field. [Usage note: Users should inquire of software vendors if the user needs to add a zero in the data field to produce the default value “0.00”.]

6.h.(7) The COST TO DATE contains the earned value for the activity. If there is an ACTUAL START DATE, then there must also be some value for COST TO DATE. An example of a number in this format is “111111111.11”. If decimal places are not needed, this field shall still contain a “.00” in the last three columns of this field. The COST TO DATE is not tied to REMAINING DURATION. For example, if the REMAINING DURATION is “0”, the COST TO DATE may only be 95% of the ACTIVITY COST. This difference may be used to reflect 5% retainage for punch list items. [Usage note: Systems implement cost information in different ways. It is recommended that users carefully review SDEF documentation and test results to determine how to ensure that SDEF data is exported correctly.]

6.h.(8) The STORED MATERIAL field contains the value of the material that the Contractor has paid for and is on site or in secure storage areas that is a portion of the COST TO DATE. An example of a number in this format is “111111111.11”. If decimal places are not needed, this field shall still contain a “.00” in the last three columns of this field. [Usage note: Systems implement the stored materials field in a variety of ways. Many systems do not enforce STORED MATERIAL + COST TO DATE < ACTIVITY COST. To avoid potential confusion between systems, it is recommended that new activities be added to a schedule to reflect the cost of large equipment procurement rather than use the STORED MATERIALS field.]

6.h.(9) The EARLY START DATE indicates the earliest date possible that an activity can start as calculated by a CPM scheduling system or other Contracting Officer approved planning method. If the progress record for an activity contains an ACTUAL START DATE, then this field shall be blank.

6.h.(10) The EARLY FINISH DATE indicates the earliest date possible that an activity can finish as calculated by a CPM scheduling system or other Contracting Officer approved planning method. If the progress record for an activity contains an ACTUAL FINISH DATE, then this field shall be blank.

6.h.(11) The LATE START DATE indicates the latest date that an activity can begin as calculated by a CPM scheduling system or other Contracting Officer approved planning method. If the progress record for an activity contains an ACTUAL START DATE, then this field shall be blank.

6.h.(12) The LATE FINISH DATE indicates the latest date that an activity can finish as calculated by a CPM scheduling system or other Contracting Officer approved planning method. If the progress record for an activity contains an ACTUAL FINISH DATE, then this field shall be blank.

6.h.(13) The FLOAT SIGN indicates whether the float time calculated using a CPM scheduling system or other Contracting Officer approved planning method, is positive or negative in nature. If the progress record for an activity contains an ACTUAL FINISH DATE, then this field shall be blank. In the case of zero float this field shall be blank.

6.h.(14) The TOTAL FLOAT indicates the total float time. In the Precedence Diagram Method (PDM), the total float is the difference between the early and late start or finish dates. In the Arrow Diagram Method (ADM), the total float is equal to the late event time at the end of the activity, minus the sum of the early event time at the start of the activity plus the duration of the activity.

6.i. Project End Record: The Project End Record shall be used to identify that the data file is completed. If the ASCII End of File character is encountered, then data import programs shall use that character to infer that the data continues on the next disk. The user shall then be prompted for the next disk number, based on the VOLM record data. The Project End Record shall be the last record of the entire data file, and shall have the following format:

Description	Column Position	Max. Len.	Req. Value	Type	Notes
RECORD IDENTIFIER	1 – 3	3	END	Fixed	Filled

6.i.(1) The RECORD IDENTIFIER for the Project End Record shall be “END”. Data contained in the data exchange file that occurs after this record shall not be used.

SECTION 01330

SUBMITTAL PROCEDURES

(CENAN-CO-CQ 06/02)

PART 1 GENERAL

1.1 SUMMARY

This section covers procedures to be used in making submittals called for in the contract documents. In contracts which contain specific "Contractor Quality Control" requirements, the Contractor's Quality Control Representative shall carry out duties associated with submittal procedures. In contract which do not contain specific CQC requirements, reference to "CQC Representative" shall be interpreted as reference to the Contractor's authorized representative, and references to "CQC Requirements" or "CQC Clauses" shall be interpreted as "requirements or clauses elsewhere in the contract."

1.2 SUBMITTAL IDENTIFICATION

Submittals required are identified by SD numbers and titles as follows:

SD-01 Preconstruction Submittals

A document, required of the Contractor, or through the Contractor, from a supplier, installer, manufacturer, or other lower tier Contractor, the purpose of which is to confirm the quality or orderly progression of a portion of the work by documenting procedures, acceptability of methods or personnel, qualifications, or other verifications of quality.

SD-02 Shop Drawings

Submittals which graphically show relationship of various components of the work, schematic diagrams of systems, details of fabrication, layouts of particular elements, connections, and other relational aspects of the work.

SD-03 Product Data

Preprinted manufacturer material describing a product, system, or material, such as catalog cuts.

SD-04 Samples

Samples, including both fabricated and un-fabricated physical examples of materials, products, and units of work as complete units or as portions of units of work.

SD-05 Design Data

Submittals, which provide calculations, descriptions, or documentation regarding the work.

SD-06 Test Reports

Reports of inspections or tests, including analysis and interpretation of test results.

SD-07 Certificates

Statement signed by an official authorized to certify on behalf of the manufacturer of a product, system or material, attesting that the product, system or material meets specified requirements. The statement must be dated after the award of the contract, must state the Contractor's name and address, must name the project and location, and must list the specific requirements, which are being certified.

SD-08 Manufacturer’s Instructions

Preprinted material describing installation of a product, system or material; including special notices and material safety data sheets, if any, concerning impedances, hazards, and safety precautions.

SD-09 Manufacturer’s Field Reports

Daily reports from specially suppliers to the contractor that provide information, data, tests result for a product.

SD-10 Operation and Maintenance Data

Data, which forms a part of an operation and maintenance manual.

SD-11 Closeout Submittals

All data, documentations, information, and drawings to achieve contract closeout.

SD-12 Schedules

All data, documentations, information, and drawings to achieve contract closeout.

SD-13 Records

Documentation to record compliance with technical or administrative requirements.

1.3 SUBMITTAL CLASSIFICATION

Submittals are classified as follows:

1.3.1 Government Approved/Acceptance (G)

Government approval is required for all specification submittal items found in specifications having structural steel connections, extensions of design, Fire Protection/Life Safety, and Commissioning of HVAC, and other items as designated by the Contracting Officer. Government approval/acceptance (G) is also required for all submittals designated as such in the technical specifications. Within the terms of the Contract Clause entitled "Specifications and Drawings for Construction," they are considered to be "shop drawings." The Government will review all submittals designated as deviating from the Solicitation or Accepted Proposal, as described below.

1.3.2 Information Only (FIO)

All Contractor submittals not requiring Government approval/acceptance will be for information only. FIO submittals are identified in the approved submittal register Form 4288. They are not considered to be "shop drawings" within the terms of the Contract Clause referred to above. FIO Submittals will be retained at the project site and reviewed prior to Preparatory Meetings in accordance with CEGS-01451, CONTRACTOR QUALITY CONTROL.

1.3.3 Government Approval/Acceptance (G)

All submittals classified for Government Approval/Acceptance (G) are identified in the approved submittal register Form 4288. A code following the "G" designation indicates the approving authority; codes of "RO" for Resident Office approval, "DO" for Engineering approval, and "AE" for Architect-Engineer approval.

1.4 APPROVED/ACCEPTANCE SUBMITTALS

The Contracting Officer's approval of submittals shall not be construed as a complete check, but will indicate only that the general method of construction, materials, detailing and other information are satisfactory. Approval will not relieve the Contractor of the responsibility for any error which may exist, as the Contractor under the CQC requirements of this contract is responsible for dimensions, the design of adequate connections and details, and the satisfactory construction of all work. After submittals have been approved by the Contracting Officer, no resubmittal for the purpose of substituting materials or equipment will be considered unless accompanied by an explanation of why a substitution is necessary.

1.5 DISAPPROVED SUBMITTALS

The Contractor shall make all corrections required by the Contracting Officer and promptly furnish a corrected submittal in the form and number of copies specified for the initial submittal. If the Contractor considers any correction indicated on the submittals to constitute a change to the contract, a notice in accordance with the Contract Clause "Changes" shall be given promptly to the Contracting Officer.

1.6 WITHHOLDING OF PAYMENT

Payment for materials incorporated in the work will not be made if required approvals have not been obtained.

PART 2 PRODUCTS (Not Applicable)

PART 3 EXECUTION

3.1 GENERAL

The Contractor shall make submittals as required by the specifications. The Contracting Officer may request submittals in addition to those specified when deemed necessary to adequately describe the work covered in the respective sections. Units of weights and measures used on all submittals shall be the same as those used in the contract drawings. Each submittal shall be complete and in sufficient detail to allow ready determination of compliance with contract requirements. Prior to submittal, all items shall be checked and approved by the Contractor's Quality Control (CQC) representative and each item shall be stamped, signed, and dated by the CQC representative indicating action taken. Proposed deviations from the contract requirements shall be clearly identified. Submittals shall include items such as: Contractor's, manufacturer's, or fabricator's drawings; descriptive literature including (but not limited to) catalog cuts, diagrams, operating charts or curves; test reports; test cylinders; samples; O&M manuals (including parts list); certifications; warranties; and other such required submittals. Submittals requiring Government approval shall be scheduled and made prior to the acquisition of the material or

equipment covered thereby. Samples remaining upon completion of the work shall be picked up and disposed of in accordance with manufacturer's Material Safety Data Sheets (MSDS) and in compliance with existing laws and regulations.

3.2 SUBMITTAL REGISTER (ENG FORM 4288)

At the end of this section is one set of ENG Form 4288 listing items of equipment and materials for which submittals are required by the specifications; this list may not be all inclusive and additional submittals may be required. Columns "d" through "r" have been completed by the Government; the Contractor shall complete columns "a" and "s" through "u" and submit the forms (hard copy plus associated electronic file) to the Contracting Officer for approval within 30 calendar days after Notice to Proceed (15 days if construction time is 180 days or less). If the Government supplies the ENG Form 4288 on the Resident Management System (RMS) electronic format, the contractor will be required to process and update the 4288 electronically, and make appropriate electronic submissions to the Government. Otherwise, the Contractor shall enter the submittal register in the appropriate electronic format such as MS Excel, manually. In both cases, the Contractor shall update the 4288 electronically, and shall submit it to the Government together with the monthly payment request. The approved submittal register will become the scheduling document and will be used to control submittals throughout the life of the contract. The submittal register and the progress schedules shall be coordinated. NOTE: The Contractor is required to add additional entries to the Submittal Register for all items requiring multiple submittals, including Formwork Shop Drawings per Lift, Concrete Reinforcement per Lift, Concrete Lift Drawings per Lift, Multiple Shop Assembly Drawings, etc. These entries should be made prior to original submission of the submittal register within 30 days of Notice to Proceed.

3.3 SCHEDULING

Submittals covering component items forming a system or items that are interrelated shall be scheduled to be coordinated and submitted concurrently. Certifications to be submitted with the pertinent drawings shall be so scheduled. Adequate time (a minimum of 30 calendar days exclusive of mailing time) shall be allowed and shown on the register for review and approval. No delay damages or time extensions will be allowed for time lost in late submittals. An additional 10 calendar days shall be allowed and shown on the register for review and approval of submittals for food service equipment, refrigeration and HVAC control systems, computer software for specialty systems, electrical substations, and studies including electrical system coordination studies.

3.4 TRANSMITTAL FORM (ENG FORM 4025)

The sample transmittal form (ENG Form 4025) attached to this section shall be used for submitting both Government approved and information only submittals in accordance with the instructions on the reverse side of the form. These forms will be furnished to the Contractor. This form shall be properly completed by filling out all the heading blank spaces and identifying each item submitted. Special care shall be exercised to ensure proper listing of the specification paragraph and/or sheet number of the contract drawings pertinent to the data submitted for each item. If the contractor is required in another section of the specifications to utilize the Quality Control System (QCS), the contractor will be required to generate and process this form electronically using the QCS system.

3.5 SUBMITTAL PROCEDURE

Submittals shall be made as follows:

3.5.1 Procedures

At the Quality Control Coordination meeting, or preconstruction conference, the Contractor shall ascertain the name and address of each individual, agency, or firm who is designated to normally receive items for approval, for information or samples. The contractor shall complete ENG Form 4025, entering each item requiring a separate approval action as a separate item on the form, for each transmittal. A transmittal may consist of one or more 4025 sheets. The transmittal, consisting of ENG Form 4025 plus all applicable submittals, is then sent to the appropriate individual. On critical items the Contractor is encouraged to confirm receipt via telephone. The Contractor shall submit seven copies of submittals for approval and one for items for information.

3.5.2 Deviations

For submittals which include proposed deviations requested by the Contractor, the column "variation" of ENG Form 4025 shall be checked. The Contractor shall set forth in writing the reason for any deviations and annotate such deviations on the submittal. The Government reserves the right to rescind inadvertent approval of submittals containing unnoted deviations.

3.6 CONTROL OF SUBMITTALS

The Contractor shall carefully control its procurement operations to ensure that each individual submittal is made on or before the Contractor scheduled submittal date shown on the approved "Submittal Register."

3.7 GOVERNMENT APPROVED/ACCEPTANCE SUBMITTALS

Upon completion of review of submittals requiring Government approval, the submittals will be identified as having received approval by being so stamped and dated. Four copies of the submittal will be retained by the Contracting Officer and three copies of the submittal will be returned to the Contractor.

3.8 INFORMATION ONLY SUBMITTALS

Normally submittals for information only will not be returned. Approval of the Contracting Officer is not required on information only submittals. The Government reserves the right to require the Contractor to resubmit any item found not to comply with the contract. This does not relieve the Contractor from the obligation to furnish material conforming to the plans and specifications; will not prevent the Contracting Officer from requiring removal and replacement of nonconforming material incorporated in the work; and does not relieve the Contractor of the requirement to furnish samples for testing by the Government laboratory or for check testing by the Government in those instances where the technical specifications so prescribe.

3.9 STAMPS

Stamps used by the Contractor on the submittal data to certify that the submittal meets contract requirements shall be similar to the following:

CONTRACTOR

(Firm Name)

_____ Approved

_____ Approved with corrections as noted on submittal data and/or attached sheet (s).

SIGNATURE: _____

TITLE: _____

DATE: _____

---- End of Section---

SECTION 01331

CONTRACTOR WARRANTY MANAGEMENT

PART 1 GENERAL

1.1 REFERENCES

a. Clause "Warranty of Construction", (FAR 52.246-0021)
b. Clause "Inspection of Construction", (FAR 52.246-12)
c. Special Requirement paragraph titled "Record Drawings"
d. Specification Section titled "Contractor Quality Control"

1.2 GENERAL

In order to insure that the Government systematically receives all warranties of construction, equipment and systems to which it is entitled, the contractor shall execute all actions as required by above references and as contained herein.

1.3 POST COMPLETION INSPECTIONS

For purposes of management of construction warranties, the Government conducts four and nine month warranty inspections with using agencies. The Contractor is encouraged to attend these inspections in order to better manage any warranty items for which it may be responsible.

1.4 TAGGING OF EXTENDED WARRANTY ITEMS

The Contractor shall install tags to identify items protected by extended warranty, i.e. longer than the one year general warranty of construction. The tags shall be minimum 3 inches by 5 inches in size, machine-printed in minimum 14-point type, and shall be weatherproof. Tags shall be attached to equipment if accessible or to accessible control panel, etc. As a minimum, tags shall indicate the following information:

"Extended Warranty Item"
Name of Item
Name of System with which associated, number designation within system or other identifier
Model Number
Serial Number
Start and End Dates of Warranty
Contractor Number
Contractor Name
Point of Contact Name, Organization, and Telephone Number

1.5 POSTING OF INSTRUCTION

In addition to any posting of operating procedures as may be required elsewhere in this contract, any equipment or system for which proper operation or maintenance is critical in order to preserve warranties, prevent damage, or for reasons of safety shall have proper operating procedures posted near the equipment or near the operating point.

Instructions shall be protected by 1/16 inch thick plastic sheet. As a minimum such equipment or system shall include:

Electrical Substations
Transformers
Electrical Generators
Major HVAC System components including chillers, air-handlers, fans, etc.
HVAC Control Panel
Boilers
Air Compressors

1.6 WARRANTY MEETING

At least 14 days prior to 80% completion point of this contract (or deliverable phase thereof), the contractor will notify the Government representative for the purpose of scheduling a meeting to clarify understandings of responsibilities with respect to warranties to which the Government is entitled. The Government and contractor shall attend the warranty meeting, as well as any subcontractors, or suppliers involved in the warranty process. The Warranty Plan (below) shall have already been submitted and approved by the Government before the warranty meeting can take place, and shall be the basis of the meeting's agenda.

1.7 WARRANTY PLAN

At least 30 days before the planned warranty meeting, the contractor shall submit a warranty plan for Government approval per section 01330 SUBMITTALS. The Warranty Plan shall include all required actions and documents to assure that the Government receives all warranties to which it is entitled. The plan shall be in narrative form and contain sufficient detail to render it suitable for use by future maintenance and repair personnel, whether tradesmen, or of engineering background, not necessarily familiar with contract. The term "status" as indicated below shall include due date and whether item has been submitted or was accomplished. As a minimum the plan shall indicate:

a. Roles and responsibilities of all personnel associated with the warranty process, including points of contacts and telephone numbers within the organizations, subcontractors or suppliers involved.

b. Listing and status O&M manuals and As-built drawings, and expected delivery dates.

c. Listing and status of all training to be provided to Government personnel, whether specified by contract or required by manufacturers.

d. Listing and status of delivery of all Certificates of Warranty for extended warranty items, to include roofs, HVAC balancing, pumps, motors, transformers, and for all commissioned systems such as fire protection and alarm systems, sprinkler systems, lightning protection system, etc.

e. A list for each warranted equipment, item, feature of construction or system indicating:

Name of item

Model and Serial Number
Location where installed
Names of manufacturers or, suppliers and phone number
Names of addresses and telephone numbers of sources of spare parts
Warranties and terms of warranty. This shall include one-year overall warranty of construction as required by ref. 1.a. Clearly indicate which items have extended warranties.
Cross-reference to warranty certificates as applicable
Starting point and duration of warranty period
Summary of maintenance procedures required to continue the warranty in force
Cross-reference to specific pertinent Operation and Maintenance manuals
Organization, names and phone numbers of persons to call for warranty service
Typical responsible time and repair time expected for various warranted equipment

f. The contractor's plans for attendance at the Four and Nine month post-construction warranty inspections conducted by the Government.

g. Procedure and status of tagging of all equipment covered by extended warranties.

g. Copies of instructions to be posted near selected pieces of equipment where operation is critical for warranty and/or safety reasons.

PART 2 PRODUCTS (NOT USED)

PART 3 EXECUTION (NOT USED)

SECTION 01420
SAFETY
nyd 3/**04**

1.0 **SAFETY:** The contractor shall comply with all applicable Federal, State, and local safety and occupational health laws and regulations. Applicable provisions of the Corps of Engineers manual entitled Safety and Health Requirements Manual EM 385-1-1, 3 Nov 2003 (with latest changes as of bid date) will be applied to all work under this contract. The referenced manual may be purchased from the U.S. Government Printing Office, Superintendent of Documents, Mail Stop: SSOP, Washington, DC 20402-9328, or via the internet at www.USACE.army.mil.

1.1 **U.S. ARMY CORPS OF ENGINEERS SAFETY AND HEALTH REQUIREMENTS MANUAL, EM 385—1-1:** This paragraph applies to contracts and purchase orders that require the Contractor to comply with EM 385-1-1 (e.g. contracts that include the Accident Prevention Clause at FAR 52.236-13 and/or safety provisions). EM 385-1-1 and its changes are available at http://www.hq.usace.army.mil (at the HQ homepage, select Safety and Occupational Health and then select Changes to EM). The Contractor shall be responsible for complying with the current edition and all changes posted on the web as set in this solicitation.

2.0 **ACCIDENT PREVENTION PROGRAM**: Within fifteen (15) calendar days after receipt of Notice to Proceed, and at least ten (10) calendar days prior to the Preconstruction Safety Conference, four (4) copies of the Accident Prevention Plan shall be submitted for review and acceptance by the Contracting Officer or the Contracting Officers Representative (COR). The accident prevention program shall be prepared in the format outlined in Appendix A of EM 385-1-1, "Minimum Basic Requirements for Accident Prevention Plan".

3.0 **HAZARD ANALYSIS**: Prior to beginning each major phase of work, an Activity Hazard Analysis shall be prepared by the Contractor performing that work, and submitted for review and acceptance. The format shall be in accordance with EM 385-1-1, figure 1-2. A major phase of work is defined as an operation involving a type of work presenting hazards not experienced in previous operations or where a new contractor or work crew is to perform. (See Contractor Quality Control specification for further guidance regarding coordination of “Activities” and “Principal Steps” indicated in the Activity Hazard Analysis with Contractor Quality Control activities). The analysis shall define the activities to be performed and identify the sequence of work, the specific hazards anticipated, and the control measures to be implemented to eliminate or reduce each hazard to an acceptable level. Work shall not proceed on that phase until the activity hazard analysis has been accepted and a preparatory meeting has been conducted by the Contractor to discuss its contents with everyone engaged in the activities, including the government on-site representative(s). The activity hazard analyses shall be continuously reviewed and when appropriate modified to address changing site conditions or operations, with the concurrence of the site safety representative, the site superintendent, and the Contracting Officer. Activity hazard analyses shall be attached to and become part of the accident prevention plan or may be developed prior to each phase of work undertaken in the contract and attached to the Quality Control reports.

3.1 Hazard analysis shall be used to identify and evaluate all substances, agents, or environments that present hazards and recommend control measures. Engineering and administrative controls shall be used to control hazards; in cases where engineering or administrative controls are not feasible, personal protective equipment may be used.

3.2 Information contained in MSDS (Material Safety Data Sheets) shall be incorporated in the hazard analysis for the activities in which hazardous or toxic materials will be used, or generated (e.g. fiberglass, crystalline silica, metal dust or fume, etc.).

4.0 **SITE SAFETY OFFICER** : The contractor shall identify an individual directly employed by the contractor as Site Safety Officer (SSO) responsible to the Contractor to implement and continually enforce the Accident Prevention Plan. The site safety officer shall not be the same individual as the Quality Control System Manager if the CQC System Manager is required to have no duties other than Quality Control. The site safety officer shall have the authority to suspend operational activities if the health and safety of personnel are endangered, and to suspend an individual from operational activities for infractions of the Accident Prevention Plan. Additional safety staff or alternate SSO may be assigned as determined by the Contractor. Alternate SSO must meet the same qualifications as the SSO.

4.1. Qualifications: The name, qualifications (training and experience) of the designated Site Safety Officer shall be included in the Accident Prevention Plan. The Site safety officer shall have the following qualifications:

a. A minimum of 5 years construction experience with at least 2 years experience in implementing safety programs at construction work sites for projects of comparable scope and complexity.
b. Documented experience in construction techniques and construction safety procedures.
c. Working knowledge of Federal and state occupational health and safety regulations.
d. Specific training in excavation safety, fall protection, and confined space.
e. CPR/First Aid certification (current)
f. Familiarity with and ability to use and implement the Corps of Engineers Safety Manual EM 385-1-1.
g. Successful completion within last 5 years (or as required by OSHA) of 10-hour OSHA Construction Safety Class

4.2. Other Requirements: Other sections of the contract documents may also require separate specially qualified individuals in such areas a chemical data acquisition, sampling and analysis, medical monitoring, industrial hygiene, quality control, etc. Contractor must comply with all safety requirements.

5.0 **SITE INSPECTIONS**: The site safety officer shall perform frequent inspections of the job sites and the work in progress to ensure compliance with EM 385-1-1 and to determine the effectiveness of the accident prevention plan. In addition, Quality Control personnel shall conduct and document daily safety inspections. Daily inspection logs shall be used to document inspections noting safety and health deficiencies, deficiencies in the effectiveness of the accident prevention plan, and corrective actions including timetable and responsibilities. The daily inspection logs will be attached to and submitted with the Daily Quality Control Reports or may be incorporated in the daily CQC report. Each entry shall include date, work area checked, employees present in work area, protective equipment and work equipment in use, special safety and health issues and notes, and signature of the preparer.

6.0 **HIGHLIGHTED PROVISIONS**: In addition to those items contained in EM 385-1-1, Appendix A, include the following items in the accident prevention plan:

6.1 Hard Hat Area. A statement that the jobsite is classified a "hard hat" area from start to finish.

6.2 Sanitation and Medical Requirements. Estimate the greatest number of employees, supervisors, etc., to be working at peak construction period, including subcontractor personnel. Include sanitation requirements and medical facilities identified for the job site. If a medical facility or physician is not accessible within five minutes of an injury to a group of two or more employees for the treatment of injuries, identify at least two or more employees on each shift who are qualified to administer first aid and CPR.

6.3 Equipment Inspection. The type of inspection program on cranes, trucks, and other types of construction equipment the Contractor plans to implement. Who will be responsible for the inspection and how the Contractor will control equipment of sub-contractors and equipment bought to the site by rental companies. Types of records to be kept.

6.3.1 Copies of records of all equipment inspections will be kept at the job site for review by the designated authority.

6.4 Crane & Derrick Operators: Written proof of qualification for all crane and derrick operators in accordance with EM 385-1-1, 16.C.05. Qualification shall be by written (or oral) examination and practical operating examination unless the operator is licensed by a state or city licensing agency for the particular type of crane or derrick. Proof of qualification shall be provided by the qualifying source.

7.0 **ACCIDENT REPORTS**: The contractor shall immediately report all accidents by telephone to the COR.

7.1 The Contractor will provide an initial written report of the accident to the COR within 24 hours. The Contractor shall complete and submit ENG Form 3394 for all accidents involving lost work time, medical treatment, and/or property damage in excess of $2000.00 within 48 hours of the accident. The report shall accurately represent the circumstances of the accident, cause of the accident, extent of medical treatment, extent of injuries and steps to prevent occurrence of similar accidents. The hazard analysis covering the work activity being undertaken during the accident shall be attached to the report.

7.2 Daily records of all first aid treatment not otherwise reportable shall be maintained at the job site and furnished to the designated authority upon request. Records shall also be maintained of all exposure and accident experience incidental to the work (OSHA Form 300 or equivalent as prescribed by 29 CFR 1904).

8.0 **MONTHLY EXPOSURE REPORTS**: The Contractor shall submit to the COR no later than the 1st day of each month, a compilation of manhours worked each month by the prime contractor and each subcontractor. In addition ,the contractor shall report the number of accidents, severity, class of accidents, and lost time work days for each month.

9.0 **CLEAN-UP**: The Contractor's Accident Prevention Plan shall identify the individual's responsible for cleanup and shall establish a regular housekeeping procedure and schedule. If the COR determines that cleanup is not being performed satisfactorily, the Contractor shall establish a work crew to perform the continuous cleanup required by the contract clause titled: CLEANING UP: The number of individuals appointed to the cleanup work crew shall be increased as required in order to render adequate cleanup.

10.0 **FOCUS AREAS**: To supplement and emphasize the requirements of EM 385-1-1, the following is provided and shall be met as applicable.

10.1 Electrical Work: Electrical work shall not be performed on or near energized lines or equipment unless specified in the plans and specifications and approved by the COR. Plan and layout of proposed temporary power to the construction site shall be submitted and approved by the COR before work will be permitted.

10.1.1 Upon request by the Contractor, arrangements will be made for de-energizing lines and equipment so that work may be performed. All outages shall be requested through the COR a minimum of 14 days, unless otherwise specified, prior to the beginning of the specified outages. Dates and duration will be specified.

10.2 If approved by the COR, the following work may be performed with the lines energized using certified hot line equipment on lines above 600 volts, when the following conditions have been met:

a. work below the conductors no closer than the clearance required in EM 385-1-1 from the energized conductors.

b. setting and connection of new pre-trimmed poles in energized lines which do not replace an existing pole.

c. setting and removing transformers or other equipment on poles.

d. installation or removal of hot line connectors, jumpers, dead-end insulators for temporary isolation, etc., which are accomplished with hot line equipment from an insulated bucket truck.

10.3 Energized Line Work Plan: The Contractor shall submit a plan, in writing, describing his/her method of operation and the equipment to be used on energized lines. Proper certification from an approved source of the safe condition of all tools and equipment will be provided with the plan. The work will be planned and scheduled so that proper supervision is maintained. Emergency procedures, including communication, for disconnecting power in the event of an accident will be outlined in the plan. The Contractor will review his/her plan with the COR prior to being granted permission to perform the work.

10.4. No work on lines greater than 600 volts will be performed from the pole or without the use of an insulated bucket truck.

10.5 No work will be done on overbuilt lines while underbuilt lines are energized, except for temporary isolation and switching.

10.6 Electrical Tools and Cords: Hand held electrical tools shall be used only on circuits protected by ground fault circuit interrupters for protection of personnel. All general use extension cords shall be hard usage or extra hard usage as specified in Table 11-1 of EM 385-1-1. Damaged or repaired cords shall not be permitted.

10.7 Temporary Power: Temporary electrical distribution systems and devices shall be checked and found acceptable for polarity, ground continuity, and ground resistance before initial use and after modification. GFI outlets shall be installed and tested with a GFI circuit tester (tripping device) prior to use. Portable and vehicle mounted generators shall be inspected for compliance

with EM 385-1-1 and NFPA 70. All electrical equipment located outdoors or in wet locations shall be enclosed in weatherproof enclosures in accordance with EM 385-1-1. Records of all tests and inspections will be kept by the contractor and made available on site for review by the designated authority. Submit sketch of proposed temporary power for acceptance.

10.8 Rollover Protective Structures (ROPS): Seat belts and ROPS shall be installed on all construction equipment as required by paragraph 16.B.12 of EM 385-1-1. The operating authority will furnish proof from the manufacturer or licensed engineer that ROPS meets the applicable SAE standards cited in EM 385-1-1, pg. 302.

10.9 Radiation Permits or Authorizations: Contractors contemplating the use of a licensed or DOD regulated radiological device or radioactive material on a DOD installation will secure appropriate permit or authorization from the Department of Army or Department of the Air Force, as applicable. A 45-day lead-time should be programmed for obtaining the necessary authorization or permit. When requested, the COR will assist the Contractor in obtaining the required permit or authorization.

10.9.1 The Contractor shall develop and implement a radiation safety program to comply with EM 385-1-1, Section 06.E. Provisions for leak tests, authorized personnel, transport certificates, etc. will be addressed in the radiation safety program.

10.10 Elevating Work Platforms: All elevating work platforms shall be designed, constructed, maintained, used, and operated in accordance with ANSI A92.3, ANSI A92.6, ANSI A92.5 and EM 385-1-1, Sections 22.J.

10.10.1 Only personnel trained in the use of elevating work platforms shall be authorized to use them. A list of authorized users will be maintained by the contractor at the job site. The list will be updated to remain current and made available for review on site by the designated authority. Personnel safety belts must be worn.

10.11 Fall Protection: Fall protection in the form of standard guardrails, nets, or personal fall arrest systems will be provided for all work conducted over 6 feet in height The contractor will submit his/her proposed method of fall protection to the COR as part of the Job Hazard Analysis for acceptance. If the contractor deems that conventional fall protection as described above is not feasible, or creates a greater hazard, the Contractor will prepare a written fall protection plan in accordance with OSHA 29 CFR 1926.502(k). The plan will demonstrate the reasons that conventional fall protection is unfeasible or constitutes a greater hazard and will provide alternative safety measures for review and acceptance by the COR.

10.12 Excavations: All open excavations made in the earth's surface four (4) foot or greater will be under the supervision of a competent person trained in, and knowledgeable about, soils analysis, the use of protective systems, and the requirements of OSHA 29 CFR 1926, Subpart P and EM 385-1-1, Section 25. The competent person shall be designated in writing by the Contractor and a resume of their training and experience submitted to the COR for acceptance.

10.12.1 Excavations hazards and methods for their control will be specified in the job hazard analysis.

10.12.2 Sloping and benching: The design of sloping and benching shall be selected from and in accordance with written tabulated data, such as charts and tables. At least one copy of the tabulated data will be maintained at the job site.

10.12.3 Support Systems: shall be in accordance with one of the systems outlined in a through c below:

a. Designs drawn from manufacturer's specifications and in accordance with all specifications, limitations, and recommendations issued or made by the manufacturer. A copy of the manufacture's specifications, recommendations, and limitations will be in written form and maintained at the job site.

b. Designs selected from and in accordance with tabulated data (such as tables and charts). At least one copy of the design shall be maintained at the job site during excavation.

c. Designed by a registered engineer. At least one copy of the design shall be maintained at the job site during excavation.

10.12.4 Excavations Greater than 20 Feet in Height: Sloping and benching or support systems shall be designed by a registered professional engineer. Designs shall be in writing and at least one copy of the design shall be maintained at the job site during excavation. The contractor will ensure that the registered professional engineer is working within a discipline applicable to the excavation work; i.e. it would be inappropriate for an electrical engineer to approve shoring designed for an excavation.

10.13 Confined Space: Entry into and work in a confined space will not be allowed when oxygen readings are less than 19.5% or greater than 23.5% or if the lower explosive limit (LEL) reading is greater than 10%, unless these conditions are adequately addressed in the confined space entry plan. In addition, action levels for toxic atmospheres shall be determined and any other known or potential hazards eliminated prior to entry.

11.0 **LANGUAGE**: For each group that has employees that do not speak English, the Contractor will provide a bilingual foreman that is fluent in the language of the workers. The contractor will implement the requirements of EM 385-1-1, 01.B through these foremen.

12.0 **CONTRACTOR SAFETY MEETINGS AND DOCUMENTATION:** Contractor shall conduct and document safety meetings among its personnel as required by EM 385-1-1 and as indicated herein. Monthly meetings shall be held among all supervisors, and weekly meetings shall be conducted by supervisors or foreman for all workers. The agenda of the meeting shall include specific safety items pertinent to work being performed. Documentation shall include a summary of items discussed as well as other items required by the EM 385-1-1. Documentation shall be submitted to the Government monthly.

13.0 **COORDINATION WITH OTHER SPECIFICATION SECTIONS**: The requirements of this section are meant to supplement requirements of other sections. In cases of discrepancies the most stringent requirements shall apply . Other safety-related requirements can be found in the following specification sections:

a. Specification Section 00800, Special Contract Requirements
b. Specification Section 00700, Contract Clauses, paragraph entitled “accident Prevention”
c. Specification Section entitled “Contractor Quality Control”
d. Other specifications or contract requirements relating to site safety or health requirement or medical monitoring.

14.0 **CONTRACTOR PERFORMANCE APPRAISAL**: The occurrence of accidents and near misses due to negligence are strong indications that there has been insufficient emphasis on effective implementation and/or commitment to the accident prevention program. Should it become obvious that only lip service is being given to this program, an interim unsatisfactory performance appraisal rating will be issued. If safety continues to be unsatisfactory or marginal, the unsatisfactory rating will become final. The contractor should be aware that this appraisal will be stored in a national computer database which can be accessed by a multitude of agencies or municipalities desiring information on prospective contractors. An unsatisfactory rating in this database may affect the contractor's ability to obtain future Government work.

-end-

SECTION 01421

SOURCES FOR REFERENCE PUBLICATIONS
03/03

PART 1 GENERAL

1.1 REFERENCES

Various publications are referenced in other sections of the specifications to establish requirements for the work. These references are identified in each section by document number, date and title. The document number used in the citation is the number assigned by the standards producing organization, (e.g. ASTM B 564 Nickel Alloy Forgings). However, when the standards producing organization has not assigned a number to a document, an identifying number has been assigned for reference purposes.

1.2 ORDERING INFORMATION

The addresses of the standards publishing organizations whose documents are referenced in other sections of these specifications are listed below, and if the source of the publications is different from the address of the sponsoring organization, that information is also provided. Documents listed in the specifications with numbers which were not assigned by the standards producing organization should be ordered from the source by title rather than by number.

ACI INTERNATIONAL (ACI)
P.O. Box 9094
Farmington Hills, MI 48333-9094
Ph: 248-848-3700
Fax: 248-848-3701
Internet: http://www.aci-int.org

AIR CONDITIONING AND REFRIGERATION INSTITUTE (ARI)
4100 North Fairfax Dr., Suite 200
ATTN: Pubs Dept.
Arlington, VA 22203
Ph: 703-524-8800
Fax: 703-528-3816
E-mail: ari@ari.org
Internet: http://www.ari.org

AIR CONDITIONING CONTRACTORS OF AMERICA (ACCA)
2800 Shirlington Road, Suite 300
Arlington, VA 22206
Ph: 703-575-4477
FAX: 703-575-4449
Internet: http://www.acca.org

AIR DIFFUSION COUNCIL (ADC)
1000 East Woodfield Road, Suite 102
Shaumburg, IL 60173-5921

Ph: 847-706-6750
Fax: 847-706-6751
Internet: http://www.flexibleduct.org

AIR MOVEMENT AND CONTROL ASSOCIATION INTERNATIONAL(AMCA)
30 W. University Dr.
Arlington Heights, IL 60004-1893
Ph: 847-394-0150
Fax: 847-253-0088
Internet: http://www.amca.org

ALUMINUM ASSOCIATION (AA)
900 19th Street N.W., Ste 300
Washington, DC 20006
Ph: 202-862-5100
Fax: 202-862-5164
Internet: http://www.aluminum.org

AMERICAN ARCHITECTURAL MANUFACTURERS ASSOCIATION (AAMA)
1827 Walden Ofc. Sq.
Suite 104
Schaumburg, IL 60173-4268
Ph: 847-303-5664
Fax: 847-303-5774
Internet: http://www.aamanet.org

AMERICAN ASSOCIATION OF STATE HIGHWAY AND TRANSPORTATION OFFICIALS (AASHTO)
444 N. Capital St., NW, Suite 249
Washington, DC 20001
Ph: 202-624-5800
Fax: 202-624-5806
Internet: http://www.aashto.org

AMERICAN ASSOCIATION OF TEXTILE CHEMISTS AND COLORISTS (AATCC)
P.O. Box 12215
Research Triangle Park, NC 27709-2215
Ph: 919-549-8141
Fax: 919-549-8933
Internet: http://www.aatcc.org

AMERICAN BEARING MANUFACTURERS ASSOCIATION (ABMA)
2025 M Street, NW, Suite 800
Washington, DC 20036
Ph: 202-367-1155
Fax: 202-367-2155
Internet: http://www.abma-dc.org

AMERICAN BOILER MANUFACTURERS ASSOCIATION (ABMA)
4001 North 9th Street, Suite 226
Arlington, VA 22203-1900

Ph: 703-522-7350
Fax: 703-522-2665
Internet: http://www.abma.com

AMERICAN CONCRETE PIPE ASSOCIATION (ACPA)
222 West Las Colinas Blvd., Suite 641
Irving, TX 75039-5423
Ph: 972-506-7216 or 800-290-2272
Fax: 972-506-7682
Internet: http://www.concrete-pipe.org
e-mail: info@concrete-pipe.org

AMERICAN CONFERENCE OF GOVERNMENTAL INDUSTRIAL HYGIENISTS (ACGIH)
1330 Kemper Meadow Dr.

Cincinnati, OH 45240
Ph: 513-742-2020
Fax: 513-742-3355
Internet: http://www.acgih.org
E-mail: mail@acgih.org

AMERICAN FOREST & PAPER ASSOCIATION (AF&PA)
American Wood Council
ATTN: Publications Dept.
1111 Nineteenth St. NW, Suite 800
Washington, DC 20036
Ph: 800-878-8878 or 202-463-2700
Fax: 202-463-2785
Internet: http://www.afandpa.org/

AMERICAN GAS ASSOCIATION (AGA)
400 N. Capitol St. N.W.Suite 450
Washington, D.C. 20001
Ph: 202-824-7000
Fax: 202-824-7115
Internet: http://www.aga.org

AMERICAN GAS ASSOCIATION LABORATORIES (AGAL)
400 N. Capitol St. N.W.Suite 450
Washington, D.C. 20001
Ph: 202-824-7000
Fax: 202-824-7115
Internet: http://www.aga.org

AMERICAN GEAR MANUFACTURERS ASSOCIATION (AGMA)
1500 King St., Suite 201
Alexandria, VA 22314-2730
Ph: 703-684-0211
Fax: 703-684-0242
Internet: http://www.agma.org

AMERICAN INSTITUTE OF STEEL CONSTRUCTION (AISC)
One East Wacker Dr., Suite 3100
Chicago, IL 60601-2001
Ph: 312-670-2400
Publications: 800-644-2400
Fax: 312-670-5403
Internet: http://www.aisc.org

AMERICAN INSTITUTE OF TIMBER CONSTRUCTION (AITC)
7012 So. Revere Parkway, Suite 140
Englewood, CO 80112
Ph: 303-792-9559
Fax: 303-792-0669
Internet: http://www.aitc-glulam.org

AMERICAN IRON AND STEEL INSTITUTE (AISI)
1140 Connecticut Avenue, NW, Suite 705
Washington, DC 20036
Ph: 202-452-7100
FX: 202-463-6573
Internet: http://www.steel.org

AMERICAN NATIONAL STANDARDS INSTITUTE (ANSI)
1819 L Street, NW, 6th Floor
Washington, DC 20036
Ph: 202-293-8020
Fax: 202-293-9287
Internet: http://www.ansi.org/

Note --- Documents beginning with the letter "S" can be ordered from:

Acoustical Society of America
2 Huntington Quadrangle, Suite 1NO1
Melville, NY 11747-4502
Ph: 516-576-2360
Fax: 516-576-2377
Internet: http://asa.aip.org
General e-mail: asa@aip.org

AMERICAN NURSERY AND LANDSCAPE ASSOCIATION (ANLA)
1000 Vermont Avenue, NW, Suite 300
Washington, DC 20005-4914
Ph: 202-789-2900
FAX: 202-789-1893
Internet: http://www.anla.org

AMERICAN PETROLEUM INSTITUTE (API)
1220 L St., NW
Washington, DC 20005-4070
Ph: 202-682-8000
Fax: 202-682-8223
Internet: http://www.api.org

AMERICAN PUBLIC HEALTH ASSOCIATION (APHA)
800 I Street, NW
Washington, DC 20001
PH: 202-777-2742
FAX: 202-777-2534
Internet: http://www.apha.org

AMERICAN RAILWAY ENGINEERING AND MAINTENANCE-OF-WAY ASSOCIATION (AREMA)
8201 Corporate Dr., Suite 1125
Landover, MD 20785-2230
Ph: 301-459-3200
Fax: 301-459-8077
Internet: http://www.arema.org

AMERICAN SOCIETY FOR NONDESTRUCTIVE TESTING (ASNT)
1711 Arlingate Lane
P.O. Box 28518
Columbus, OH 43228-0518
Ph: 800-222-2768; 614-274-6003
Fax: 614-274-6899
Internet: http://www.asnt.org

AMERICAN SOCIETY FOR QUALITY (ASQ)
600 North Plankinton Avenue
Milwaukee, WI 53203
Ph: 800-248-1946; 414-272-8575
Fax: 414-272-1734
Internet: http://www.asq.org

AMERICAN SOCIETY OF CIVIL ENGINEERS (ASCE)
1801 Alexander Bell Drive
Reston, VA 20191-4400
Ph: 703-295-6300 - 800-548-2723
Fax: 703-295-6222
Internet: http://www.asce.org
e-mail: marketing@asce.org

AMERICAN SOCIETY OF HEATING, REFRIGERATING AND AIR-CONDITIONING ENGINEERS (ASHRAE)
1791 Tullie Circle, NE
Atlanta, GA 30329
Ph: 800-527-4723 or 404-636-8400
Fax: 404-321-5478
Internet: http://www.ashrae.org

AMERICAN SOCIETY OF SANITARY ENGINEERING (ASSE)
901 Canterbury, Suite A
Westlake, OH 44145
Ph: 440-835-3040
Fax: 440-835-3488
E-mail: info@asse-plumbing.org

Internet: http://www.asse-plumbing.org

AMERICAN WATER WORKS ASSOCIATION(AWWA)
6666 West Quincy Avenue
Denver, CO 80235
Ph: 303-794-7711
Fax: 303-794-3951
Internet: http://www.awwa.org

AMERICAN WELDING SOCIETY (AWS)
550 N.W. LeJeune Road
Miami, FL 33126
Ph: 800-443-9353 - 305-443-9353
Fax: 305-443-7559
Internet: http://www.aws.org

AMERICAN WOOD-PRESERVERS' ASSOCIATION (AWPA)
P.O. Box 5690
Grandbury, TX 76049-0690
Ph: 817-326-6300
Fax: 817-326-6306
Internet: http://www.awpa.com

APA - THE ENGINEERED WOOD ASSOCIATION (APA)
P.O.Box 11700
Tacoma, WA 98411-0700
Ph: 253-565-6600
Fax: 253-565-7265
Internet: http://www.apawood.org

ARCHITECTURAL WOODWORK INSTITUTE (AWI)
1952 Isaac Newton Square West
Reston, VA 20190
Ph: 703-733-0600
Fax: 703-733-0584
Internet: http://www.awinet.org

ASBESTOS CEMENT PRODUCT PRODUCERS ASSOCIATION (ACPPA)
PMB114-1745 Jefferson Davis Highway
Arlington, VA 22202
Ph: 514-861-1153
Fax: 514-861-1152
Internet: www.asbestos-institute.ca

ASM INTERNATIONAL (ASM)
9639 Kinsman Road
Materials Park, OH 44073-0002
Ph: 440-338-5151
Fax: 440-338-4634
Internet: http://www.asm-intl.org

ASME INTERNATIONAL (ASME)
Three Park Avenue
New York, NY 10016-5990
Ph: 212-591-7722
Fax: 212-591-7674
Internet: http://www.asme.org

ASPHALT INSTITUTE (AI)
Research Park Dr.
P.O. Box 14052
Lexington, KY 40512-4052
Ph: 859-288-4960
Fax: 859-288-4999
Internet: http://www.asphaltinstitute.org

ASSOCIATED AIR BALANCE COUNCIL (AABC)
1518 K St., NW
Washington, DC 20005
Ph: 202-737-0202
Fax: 202-638-4833
Internet: http://www.aabchq.com
E-mail: aabchq@aol.com

ASSOCIATION FOR THE ADVANCEMENT OF MEDICAL INSTRUMENTATION (AAMI)
1110 N. Glebe Rd., Suite 220
Arlington, VA 22201-4795
Ph: 1-800-332-2264 or 703-525-4890
Fax: 703-276-0793
Internet: http://www.aami.org

ASSOCIATION OF EDISON ILLUMINATING COMPANIES (AEIC)
600 No. 18th St.
P.O. Box 2641
Birmingham, AL 35291
Ph: 205-257-2530
Fax: 205-257-2540
Internet: http://www.aeic.org

ASSOCIATION OF HOME APPLIANCE MANUFACTURERS (AHAM)
1111 19th St. NW., Suite 402
Washington, DC 20036
Ph: 202-872-5955
Fax: 202-872-9354
Internet: http://www.aham.org

ASSOCIATION OF THE WALL AND CEILING INDUSTRIES - INTERNATIONAL (AWCI)
803 West Broad Street
Falls Church, VA 22046
PH: 703-534-8300

FAX: 703-534-8307
Internet: http://www.awci.org

ASTM INTERNATIONAL (ASTM)

100 Barr Harbor Drive, PO Box C700
West Conshohocken, PA 19428-2959
Ph: 610-832-9500
Fax: 610-832-9555
Internet: http://www.astm.org

ALLIANCE FOR TELECOMMUNICATIONS INDUSTRY SOLUTIONS (ATIS)
1200 G Street NW, Suite 500
Washington, D.C. 20005
Ph: 202-628-6380
Fax: 202-393-5453
Internet: Unknown
E-mail: Unknown

BIFMA INTERNATIONAL (BIFMA)
2680 Horizon Drive SE, Suite A-1
Grand Rapids, MI 49546-7500
Ph: 616-285-3963
Fax: 616-285-3765
Internet: http://www.bifma.org
E-mail: email@bifma.org

BIOCYCLE, JOURNAL OF COMPOSTING AND RECYCLING (BIOCYCLE)
The JG Press Inc.
419 State Avenue
Emmaus PA. 18049
Ph: 610-967-4135
Internet: http://www.biocycle.net
E-mail: jgpress@jgpress.com

BRICK INDUSTRY ASSOCIATION (BIA)
11490 Commerce Park Dr.
Reston, VA 22091-1525
Ph: 703-620-0010
Fax: 703-620-3928
Internet: http://www.bia.org

BRITISH STANDARDS INSTITUTE (BSI)
389 Chiswick High Road
London W4 4AL
United Kingdom
Phone: +44 (0)20 8996 9000
Fax: +44 (0)20 8996 7001
Email: cservices@bsi-global.com
Website: http://www.bsi-global.com

BUILDERS HARDWARE MANUFACTURERS ASSOCIATION (BHMA)
355 Lexington Ave.
17th floor
New York, NY 10017
Ph: 212-297-2122
Fax: 212-370-9047
Internet: http://www.buildershardware.com

CARPET AND RUG INSTITUTE (CRI)

P.O. Box 2048
Dalton, GA 30722-2048
Ph: 1-800-882-8846 or 706-278-3176
Fax: 706-278-8835
Internet: http://www.carpet-rug.com

CAST IRON SOIL PIPE INSTITUTE (CISPI)
5959 Shallowford Rd., Suite 419
Chattanooga, TN 37421
Ph: 423-892-0137
Fax: 423-892-0817
Internet: http://www.cispi.org

CEILINGS & INTERIOR SYSTEMS CONSTRUCTION ASSOCIATION (CISCA)
1500 Lincoln Highway, Suite 202
St. Charles, IL 60174
Ph: 630-584-1919
Fax: 630-584-2003
Internet: http://www.cisca.org

CENTERS FOR DISEASE CONTROL AND PREVENTION (CDC)
1600 Clifton Road
Atlanta, GA 30333
PH: 404-639-3311

Internet: http://www.cdc.gov

CHEMICAL FABRICS & FILM ASSOCIATION (CFFA)
1300 Sumner Ave.
Cleveland OH 44115-2851
PH: 216-241-7333
FAX: 216-241-0105
Internet: http://www.chemicalfabricsandfilm.com/
OK 2/03

CHLORINE INSTITUTE (CI)
1300 Wilson Boulevard
Rosslyn, VA 22209
Ph: 703-741-5760
Fax: 703-741-6068
Internet: http://www.cl2.com

COMPRESSED AIR AND GAS INSTITUTE (CAGI)
1300 Sumner Ave.
Cleveland OH 44115-2851
PH: 216-241-7333
FAX: 216-241-0105
Internet: http://www.cagi.org/

COMPRESSED GAS ASSOCIATION (CGA)
4221 Walney Road, 5th Floor
Chantilly, VA 20151-2923
Ph: 703-788-2700
Fax: 703-961-1831
Internet: http://www.cganet.com
e-mail: cga@cganet.com

CONCRETE REINFORCING STEEL INSTITUTE (CRSI)
933 N. Plum Grove Rd.
Schaumburg, IL 60173-4758
Ph: 847-517-1200
Fax: 847-517-1206
Internet: http://www.crsi.org/

CONSUMER PRODUCT SAFETY COMMISSION (CPSC)
4330 East-West Highway
Bethesda, MD 20814-4408
Ph: 301-504-6816
Fx: 301-504-0124 and 301-504-0025
Internet: http://www.cpsc.gov

CONVEYOR EQUIPMENT MANUFACTURERS ASSOCIATION (CEMA)
6724 Lone Oak Blvd.
Naples, FL 34109
Ph: 239-514-3441
Fax: 239-514-3470
Internet: http://www.cemanet.org

COOLING TECHNOLOGY INSTITUTE (CTI)
2611 FM 1960 West
Suite H-200
Houston, TX 77068-3730
Ph: 281-583-4087
Fax: 281-537-1721
Internet: http://www.cti.org

COPPER DEVELOPMENT ASSOCIATION (CDA)
260 Madison Ave.
New York, NY 10016
Ph: 212-251-7200
Fax: 212-251-7234
Internet: http://www.copper.org
E-mail: staff@cda.copper.org

CRANE MANUFACTURERS ASSOCIATION OF AMERICA (CMAA)
8720 Red Oak Blvd., Ste, 201
Charlotte, NC 28217
Ph: 704-676-1190 or 800-722-6832
Fx: 704-676-1199
Internet: http://www.mhia.org/psc/psc_products_cranes.cfm

DISTRICT OF COLUMBIA MUNICIPAL REGULATIONS (DCMR)
441 4th Street NW, Suite 520
Washington DC 20001
PH: 202-727-5090
Internet: http://www.abfa.com/dcdocs/dcmrlist.htm

DOOR AND ACCESS SYSTEM MANUFACTURERS ASSOCIATION (DASMA)
1300 Sumner Avenue
Cleveland, OH 44115-2851
Ph: 216-241-7333
Fax: 216-241-0105
Internet: http://www.dasma.com
e-mail: dasma@dasma.com

DOOR AND HARDWARE INSTITUTE (DHI)
14150 Newbrook Dr.Suite 200
Chantilly, VA 20151-2223
Ph: 703-222-2010
Fax: 703-222-2410
Internet: http://www.dhi.org
e-mail: info@dhi.org

DUCTILE IRON PIPE RESEARCH ASSOCIATION (DIPRA)
245 Riverchase Parkway East, Suite O
Birmingham, AL 35244
Ph: 205-402-8700
Fax: 205-402-8730
Internet: http://www.dipra.org
E-mail: info@dipra.org

EIFS INDUSTRY MEMBERS ASSOCIATION (EIMA)
3000 Corporate Center Drive, Suite 270
Morrow, GA 30260
Ph: 800-294-3462
Fax: 770-968-5818
Internet: http://www.eima.com

ELECTRICAL GENERATING SYSTEMS ASSOCIATION (EGSA)
1650 South Dixie Highway, Ste. 500
Boca Raton, FL 33432-7462
Ph: 561-750-5575
Fax: 561-395-8557
Internet: http://www.egsa.org

ELECTRONIC INDUSTRIES ALLIANCE (EIA)
2500 Wilson Blvd.
Arlington, VA 22201-3834
Ph: 703-907-7500
Fax: 703-907-7501
Internet: http://www.eia.org

ENERGY RESEARCH AND DEVELOPMENT ADMINISTRATION (ERDA)
Organization abolished by Dept of Energy Act
(91 Stat 577)4 Aug 1977
Successor Organization is Department of Energy
Forrestal 4B-222
Washington, DC, 202-586-4716
PH: 202-586-4716
FAX: 202-586-1972
Internet: http://www.directives.doe.gov/

ENGINE MANUFACTURERS ASSOCIATION (EMA)
Two North LaSalle Street, Suite 2200
Chicago, Il 60602
PH: 312-827-8700
FAX: 312-827-8737
Internet: http://www.engine-manufacturers.org/

ETL TESTING LABORATORIES (ETL)
Intertek Testing Services, ETL SEMKO
70 Codman Hill Road
Boxborough, MA 01719
PH: 978-263-2662
FAX: 978-263-7086
Internet: http://www.etlsemko.com
E-mail: info@etlsemko.com

EXPANSION JOINT MANUFACTURERS ASSOCIATION (EJMA)
25 N Broadway
Tarrytown, NY 10591
Ph: 914-332-0040
Fax: 914-332-1541
Internet: http://www.ejma.org

FM GLOBAL (FM)
1301 Atwood Avenue
P.O. Box 7500
Johnston, RI 02919
Ph: 401-275-3000
Fax: 401-275-3029
Internet: http://www.fmglobal.com

FLUID SEALING ASSOCIATION (FSA)
994 Old Eagle School Road #1019
Wayne, PA 19087
PH: 610-971-4850

FAX: 610-9971-4859
Internet: http://www.fluidsealing.com
E-mail: info@fluidsealing.com

FORESTRY SUPPLIERS (FSUP)
205 West Rankin St.
P.O. Box 8397
Jackson, MS 39284-8397
Ph: 601-354-3565
Fax: 601-292-0165
Internet: http://www.forestry-suppliers.com

FOUNDATION FOR CROSS-CONNECTION CONTROL AND HYDRAULIC RESEARCH (FCCCHR)
University of South California
Kaprielian Hall 200
Los Angeles, CA 90089-2531
Ph: 213-740-2032
Fax: 213-740-8399
Internet: http://www.usc.edu/dept/fccchr

GEOLOGICAL SOCIETY OF AMERICA (GSA)
P.O. Box 9140
Boulder, CO 80301-9140
Ph: 303-447-2020
Fax: 303-357-1070
Internet: http://www.geosociety.org

GEOSYNTHETIC INSTITUTE (GSI)
475 Kedron Ave.
Folsom, PA 19033
Ph: 610-522-8440
Fax: 610-522-8441
Internet: http://www.geosynthetic-institute.org

GLASS ASSOCIATION OF NORTH AMERICA (GANA)
2945 SW Wanamaker Drive, Suite A
Topeka, KS 66614
Ph: 785-271-0208
Fax: 785-271-0166
Internet: http://www.glasswebsite.com/GANA

GYPSUM ASSOCIATION (GA)
810 First St. NE, Suite 510
Washington, DC 20002
Ph: 202-289-5440
Fax: 202-289-3707
Internet: http://www.gypsum.org

HARDWOOD PLYWOOD & VENEER ASSOCIATION (HPVA)

P.O. Box 2789
Reston, VA 20195-0789
Ph: 703-435-2900
Fax: 703-435-2537
Internet: http://www.hpva.org

HEAT EXCHANGE INSTITUTE (HEI)
1300 Sumner Ave
Cleveland, OH 44115-2851
Ph: 216-241-7333
Fax: 216-241-0105
Internet: http://www.heatexchange.org
email: hei@heatexchange.org

HOIST MANUFACTURERS INSTITUTE (HMI)
8720 Red Oak Blvd., Suite 201
Charlotte, NC 28217
PH: 704-676-1190
FAX: 704-676-1199
Internet: http://www.mhia.org/psc/PSC_Products_Hoists.cfm

H.P. WHITE LABORATORY (HPW)
3114 Scarboro Rd.
Street, MD 21154
Ph: 410-838-6550
fax: 410-838-2802
Internet: http://www.hpwhite.com

HYDRAULIC INSTITUTE (HI)
9 Sylvan Way
Parsippany, NJ 07054-3802
Ph: 973-267-9700
Fax: 973-267-9055
Internet: http://www.pumps.org

HYDRONICS INSTITUTE DIVISION OF GAMA (HYI)
35 Russo Pl.
P.O. Box 218
Berkeley Heights, NJ 07922-0218
Ph: 908-464-8200
Fax: 908-464-7818
Internet: http://www.gamanet.org/publist/hydroordr.htm

IBM CORPORATION (IBM)
Publications
4800 Falls of the Neuse
Raleigh, NC 27609
Ph: 800-879-2755, Option 1
Fax: 800-445-9269
Internet: http://www.ibm.com/shop/publications/order

ILLUMINATING ENGINEERING SOCIETY OF NORTH AMERICA (IESNA)
120 Wall St., 17th Floor
New York, NY 10005
Ph: 212-248-5000
Fax: 212-248-5017
Internet: http://www.iesna.org

INDUSTRIAL FASTENERS INSTITUTE (IFI)
1717 East 9th St., Suite 1105
Cleveland, OH 44114-2879
Ph: 216-241-1482
Fax: 216-241-5901
Internet: http://www.industrial-fasteners.org
e-mail: indfast@aol.com

INSECT SCREENING WEAVERS ASSOCIATION (ISWA)
DEFUNCT in 1997

INSTITUTE OF CLEAN AIR COMPANIES (ICAC)
1660 L St., NW, Suite 1100
Washington, DC 20036-5603
Ph: 202-457-0911
Fax: 202-331-1388
E-mail: jsmith@icac.com
Internet: http://icac.com

INSTITUTE OF ELECTRICAL AND ELECTRONICS ENGINEERS (IEEE)
445 Hoes Ln
Piscataway, NJ 08855-1331
Ph: 732-981-0060
Fax: 732-981-1712
Internet: http://www.ieee.org
E-mail: customer.services@ieee.org

INSTITUTE OF ENVIRONMENTAL SCIENCES AND TECHNOLOGY (IEST)
5005 Newport Drive, Suite 566
Rolling Meadows, IL 60008-3841
Ph: 847-255-1561
Fax: 847-255-1699
Internet: http://www.iest.org

INSULATED CABLE ENGINEERS ASSOCIATION (ICEA)
P.O. Box 1568
Carrollton, GA 30112
Ph: 770-830-0369
Fax: 770-830-8501

Internet: http://www.icea.net

INSULATING GLASS MANUFACTURERS ALLIANCE (IGMA)
27 Goulburn Avenue

Ottawa, Ontario. CANADA
K1N 8C7
Phone: 613-233-1510
Fax: 613-233-1929
e-mail: info@igmaonline.org
Internet: http://www.igmaonline.org

CANADIAN STANDARDS ASSOCIATION(CSA)
8501 East Pleasant Valley Rd.
Cleveland, OH 44131
Ph: 216-524-4990
Fax: 216-328-8118
Internet: http://www.csa-international.org

INTERNATIONAL CODE COUNCIL (ICC)
5203 Leesburg Pike, Suite 600
Falls Church, VA 22041
Ph: 703-931-4533
Fax: 703-379-1546
Internet: http://www.intlcode.org

INTERNATIONAL CONCRETE REPAIR INSTITUTE (ICRI)
3166 S. River Road, Suite 132
Des Planies, IL 60018
Ph: 847-827-0830
Pax: 847-827-0832
Internet: http://www.icri.org

INTERNATIONAL CONFERENCE OF BUILDING OFFICIALS (ICBO)
5360 Workman Mill Rd.
Whittier, CA 90601-2298
Ph: 800-284-4406
Ph: 562-699-0541
Fax: 562-692-3853
Internet: http://www.icbo.org

INTERNATIONAL ELECTRICAL TESTING ASSOCIATION (NETA)
P.O. Box 687
106 Stone Street
Morrison, Colorado 80465
PH: 303-697-8441
FAX: 303-697-8431
Internet: http://www.netaworld.org

INTERNATIONAL ELECTROTECHNICAL COMMISSION (IEC)
3, rue de Varembe, P.O. Box 131
CH-1211 Geneva 20, Switzerland
Ph: 41-22-919-0211
Fax: 41-22-919-0300
Internet: http://www.iec.ch
e-mail: info@iec.ch

INTERNATIONAL GROUND SOURCE HEAT PUMP ASSOCIATION (IGSHPA)
Oklahoma State University
499 Cordell South
Stillwater OK 74078-8018
PH: 800-626-4747; 405-744-5175
FAX: 405-744-5283
Internet: http://www.igshpa.okstate.edu/

INTERNATIONAL INSTITUTE OF AMMONIA REFRIGERATION (IIAR)
1110 N. Glebe Rd., Suite 250
Arlington, VA 22201
Ph: 703-312-4200
Fax: 703-312-0065
Internet: http://www.iiar.org
e-mail: iiar@iiar.org

INTERNATIONAL MUNICIPAL SIGNAL ASSOCIATION (IMSA)
P.O. Box 539
165 East Union St.
Newark, NY 14513-0539
Ph: 315-331-2182
Ph: 800-723-4672
Fax: 315-331-8205
Internet: http://www.imsasafety.org/

INTERNATIONAL ORGANIZATION FOR STANDARDIZATION (ISO)
1, rue de Varembe'
Case Postale 56
CH-1211 Geneve 20 Switzerland
Ph: 41-22-749-0111
Fax: 41-22-733-3430
Internet: http://www.iso.ch
e-mail: central@iso.ch

INTERNATIONAL SLURRY SURFACING ASSOCIATION (ISSA)
3 Church Circle, PMB 250
Annapolis, MD 21401
Ph: 410-267-0023
Fax: 410-267-7546
Internet: http://www.slurry.org
e-mail: krissoff@slurry.org

INTERNATIONAL TELECOMMUNICATION UNION (ITU)
Order from:
U.S. Dept of Commerce
National Technical Information Service
5285 Port Royal Road.
Springfield, VA 22161
Ph: 703-605-6040
FAX: 703-605-6887
Internet: http://www.ntis.gov

For documents not avail from Dept of Commerce:

Sales Service
International Telecommunication Union
Place des Nations
CH-1211 Geneve 20
Switzerland
E-Mail: itumail@itu.int
Ph: 41.22.730.5111
Fax: 41.22.730.6500
Internet: http://www.itu.org

IPC - ASSOCIATION CONNECTING ELECTRONICS INDUSTRIES (IPC)
2215 Sanders Rd.
Northbrook, IL 60062-6135
Ph: 847-509-9700
Fax: 847-509-9798
Internet: http://www.ipc.org
e-mail: info@ipc.org

IRON & STEEL SOCIETY (ISS)
186 Thorn Hill Road
Warrendale, PA 15086-7528
Ph: 724-776-1535 Ext 1
Fax: 724-776-0430
E-Mail: mailbag@issource.org
Internet: http://www.issource.org

ISA - THE INSTRUMENTATION, SYSTEMS AND AUTOMATION SOCIETY (ISA)
67 Alexander Drive
P.O. Box 12277
Research Triangle Park, NC 27709
Ph: 919-549-8411
Fax: 919-549-8288
e-mail: info@isa.org
Internet: http://www.isa.org

KITCHEN CABINET MANUFACTURERS ASSOCIATION (KCMA)
1899 Preston White Dr.
Reston, VA 20191-5435
Ph: 703-264-1690
Fax: 703-620-6530
Internet: http://www.kcma.org

L.H. BAILEY HORTORIUM (LHBH)
Dept of Plant Biology
c/o Cornell University
228 Plant Science Building
Ithaca, NY 14853
PH: 607-255-4477
Internet: http://www.plantbio.cornell.edu/Hort.php

MANUFACTURERS STANDARDIZATION SOCIETY OF THE VALVE AND FITTINGS INDUSTRY (MSS)

127 Park St., NE
Vienna, VA 22180-4602
Ph: 703-281-6613
Fax: 703-281-6671
Internet: http://www.mss-hq.com
e-mail: info@mss-hq.com

MAPLE FLOORING MANUFACTURERS ASSOCIATION (MFMA)
60 Revere Dr., Suite 500
Northbrook, IL 60062
Ph: 847-480-9138
Fax: 847-480-9282
Internet: http://www.maplefloor.org

MARBLE INSTITUTE OF AMERICA (MIA)
28901 Clemens Road, Suite 100
Westlake, OH 44145
Ph: 440-250-9222
Fax: 440-250-9223
Internet: http://www.marble-institute.com
e-mail: info@marble-institute.com

MASTER PAINTERS INSTITUTE (MPI)
4090 Graveley Street
Burnaby, BC CANADA V5C 3T6
PH: 888-674-8937
Fx: 888-211-8708
Internet: http://www.paintinfo.com/mpi

METAL BUILDING MANUFACTURERS ASSOCIATION (MBMA)
1300 Sumner Ave.
Cleveland, OH 44115-2851
Ph: 216-241-7333
Fax: 216-241-0105
Internet: http://www.mbma.com
e-mail: mbma@mbma.com

MIDWEST INSULATION CONTRACTORS ASSOCIATION (MICA)
2017 So. 139th Cir.
Omaha, NE 68144-2149
Ph: 800-747-6422
Fax: 402-330-9702
Internet: http://www.micainsulation.org
e-mail: info@micainsulation.org

MONORAIL MANUFACTURERS ASSOCIATION (MMA)
8720 Red Oak Blvd., Suite 201
Charlotte, NC 28217
PH: 704-676-1190
FAX: 704-676-1199
Internet: http://www.mhia.org/mma

NACE INTERNATIONAL (NACE)
1440 South Creek Drive
Houston, TX 77084-4906
Ph: 281-228-6200
Fax: 281-228-6300
Internet: http://www.nace.org

NATIONAL ASSOCIATION OF ARCHITECTURAL METAL MANUFACTURERS (NAAMM)
8 S. Michigan Ave, Suite 1000
Chicago, IL 60603
Ph: 312-322-0405
Fax: 312-332-0706
Internet: http://www.naamm.org
e-mail: naamm@gss.net

NATIONAL BOARD OF BOILER AND PRESSURE VESSEL INSPECTORS (NBBPVI)
1055 Crupper Ave.
Columbus, OH 43229-1183
Ph: 614-888-8320
Fax: 614-847-1147
Internet: http://www.nationalboard.org
e-mail: tbecker@nationalboard.org

NATIONAL CABLE TELECOMMUNICATIONS ASSOCIATION (NCTA)
1724 Massachusetts Ave. NW
Washington, DC 20036-1969
Ph: 202-775-3550
Fax: 202-775-1055
Internet: http://www.ncta.com

NATIONAL CONCRETE MASONRY ASSOCIATION (NCMA)
13750 Sunrise Valley Drive
Herndon, VA 20171
Ph: 703-713-1900
Fax: 703-713-1910
Internet: http://www.ncma.org

NATIONAL COUNCIL ON RADIATION PROTECTION AND MEASUREMENTS (NCRP)
7910 Woodmont Ave., Suite 800
Bethesda, MD 20814-3095
Ph: 800-229-2652
Ph. 301-657-2652
Fax: 301-907-8768
Internet: http://www.ncrp.com

NATIONAL DRILLING ASSOCIATION (NDA)
10901D Roosevelt Boulevard North, Suite 100
St. Petersburg, FL 33716
Ph: 727-577-5006
FAX: 727-577-5012
Internet: http://www.nda4u.com/
E-mail: info@nda4u.com

NATIONAL ELECTRICAL MANUFACTURERS ASSOCIATION (NEMA)
1300 N. 17th St., Suite 1847
Rosslyn, VA 22209
Ph: 703-841-3200
Fax: 703-841-3300
Internet: http://www.nema.org/
E-mail: jas_peak@nema.org

NATIONAL ENVIRONMENTAL BALANCING BUREAU (NEBB)
8575 Grovemont Circle
Gaithersburg, MD 20877-4121
Ph: 301-977-3698
Fax: 301-977-9589
Internet: http://www.nebb.org

NATIONAL FENESTRATION RATING COUNCIL (NFRC)
1300 Spring Street, Suite 500
Silver Spring, MD 20910
Ph: 301-589-6372
Fax: 303-588-6342
Internet: http://www.nfrc.org
E-Mail: nfrcusa@aol.com or info@nfrc.com

NATIONAL FIRE PROTECTION ASSOCIATION (NFPA)
1 Batterymarch Park
P.O. Box 9101
Quincy, MA 02269-9101
Ph: 617-770-3000
Fax: 617-770-0700
Internet: http://www.nfpa.org

NATIONAL FLUID POWER ASSOCIATION (NFLPA)
3333 N. Mayfair Rd.
Milwaukee, WI 53222-3219
Ph: 414-778-3344
Fax: 414-778-3361
Internet: http://www.nfpa.com
E-mail: nfpa@nfpa.com

NATIONAL HARDWOOD LUMBER ASSOCIATION (NHLA)
6830 Raleigh LaGrange Road
P.O. Box 34518
Memphis, TN 38184-0518
Ph: 901-377-1818
Fax: 901-382-6419
e-mail: info@natlhardwood.org
Internet: http://www.natlhardwood.org

NATIONAL INSTITUTE FOR CERTIFICATION IN ENGINEERING TECHNOLOGIES (NICET)

1420 King Street
Alexandria, VA 22314-2794
Ph: 888-476-4238
Internet: http://www.nicet.org

NATIONAL INSTITUTE FOR OCCUPATIONAL SAFETY AND HEALTH (NIOSH)
Mail Stop C-13
4676 Columbia Parkway
Cincinnati, OH 45226-1998
Ph: 800-356-4674
Fx: 513-533-8573
Internet: http://www.cdc.gov/niosh/homepage.html
To order pubs for which a fee is charged, order from:
Superintendent of Documents
U.S. Government Printing Office
732 North Capitol Street, NW
Mailstop: SDE
Washington, DC 20401
Ph: 866-512-2800 or 202-512-1800
Fax: 202-512-2250
Internet: http://www.gpo.gov

NATIONAL INSTITUTE OF JUSTICE (NIJ)
National Law Enforcement and Corrections Technology Center
2277 Research Blvd. - Mailstop 1E
Rockville, MD 20850
Ph: 800-248-2742 or 301-519-5060
Fax: 301-519-5149
Internet: http://www.nlectc.org
e-mail: asknlectc@nlectc.org

NATIONAL INSTITUTE OF STANDARDS AND TECHNOLOGY (NIST)
100 Bureau Drive
Stop 3460
Gaithersburg, MD 20899-3460
Ph: 301-975-NIST
Internet: http://www.nist.gov
Order Publications From:
Superintendent of Documents
U.S. Government Printing Office
732 North Capitol Street, NW
Mailstop: SDE
Washington, DC 20401
Ph: 866-512-1800 or 202-512-1800
Fax: 202-512-2250
Internet: http://www.gpo.gov
or
National Technical Information Services (NTIS)
5285 Port Royal Rd.
Springfield, VA 22161
Ph: 703-605-6000
Fax: 703-605-6900
Internet: http://www.ntis.gov

NATIONAL LIME ASSOCIATION (NLA)
200 North Glebe Road, Suite 800
Arlington, VA 22203
PH: 703-243-5463
FAX: 703-243-5489
Internet: http://www.lime.org

NATIONAL OAK FLOORING MANUFACTURERS ASSOCIATION (NOFMA)
P.O. Box 3009
Memphis, TN 38173-0009
Ph: 901-526-5016
Fax: 901-526-7022
Internet: http://www.nofma.org

NATIONAL READY-MIXED CONCRETE ASSOCIATION (NRMCA)
900 Spring St.
Silver Spring, MD 20910
Ph: 301-587-1400
Fax: 301-585-4219
Internet: http://www.nrmca.org

NATIONAL ROOFING CONTRACTORS ASSOCIATION (NRCA)
10255 W. higgins Rd., Suite 600
Rosemont, IL 60018
Ph: 847-299-9070
Fax: 847-299-1183
Internet: http://www.nrca.net

NATIONAL TERRAZZO & MOSAIC ASSOCIATION (NTMA)
110 East Market St., Suite 200 A
Leesburg, Virginia 20176
Ph: 703-779-1022 or 800-323-9736
Fax: 703-779-1026
Internet: http://www.ntma.com
e-mail: info@ntma.com

NATURAL RESOURCE, AGRICULTURAL AND ENGINEERING SERVICE (NRAES)
Cooperative Extension
152 Riley-Robb Hall
Ithaca, NY 14853-5701
Ph: 607-255-7654
Fax: 607-254-8770
Internet: http://www.nraes.org
E-mail: nraes@cornell.edu

NORTH AMERICAN INSULATION MANUFACTURERS ASSOCIATION (NAIMA)
44 Canal Center Plaza, Suite 310
Alexandria, VA 22314
Ph: 703-684-0084
Fax: 703-684-0427
Internet: http://www.naima.org
e-mail: insulation@naima.org

NORTHEASTERN LUMBER MANUFACTURERS ASSOCIATION (NELMA)
272 Tuttle Road
P.O. Box 87A
Cumberland Center, ME 04021
Ph: 207-829-6901
Fax: 207-829-4293
Internet: http://www.nelma.org
e-mail: info@nelma.org

NSF INTERNATIONAL (NSF)
ATTN: Publications
789 North Dixboro Rd.
P.O. Box 130140
Ann Arbor, MI 48113-0140
Ph: 734-769-8010
Fax: 734-769-0109
Toll Free: 800-NSF-MARK
Internet: http://www.nsf.org

PIPE FABRICATION INSTITUTE (PFI)
655 32nd Avenue, Suite 201
Lachine, QC, Canada H8T 3G6
Ph: 514-634-3434
Fax: 514-634-9736
Internet: http://www.pfi-institute.org
e-mail: pfi@pfi-institute.org

PLASTIC PIPE AND FITTINGS ASSOCIATION (PPFA)
800 Roosevelt Rd., Bldg C, Suite 20
Glen Ellyn, IL 60137
Ph: 630-858-6540
Fax: 630-790-3095
Internet: http://www.ppfahome.org

PLASTICS PIPE INSTITUTE (PPI)
1825 Connecticut Ave. NW
Washington, D. C. 20009
Ph: 202-462-9607
Fax: 202-462-9779
Internet: http://www.plasticpipe.org

PLUMBING AND DRAINAGE INSTITUTE (PDI)
45 Bristol Dr.
South Easton, MA 02375
Ph: 508-230-3516 or 800-589-8956
Fax: 508-230-3529
Internet: http://www.pdionline.org
E-Mail: info@pdionline.org

PLUMBING AND MECHANICAL CONTRACTORS ASSOCIATION (PMCA)

9450 SW Commerce Circle, Suite 310
Wilsonville, OR 97070-9626
Ph: 503-682-7919
Fax: 503-682-6241
Internet: http://www.pmcaoregon.com/

PLUMBING-HEATING-COOLING CONTRACTORS NATIONAL ASSOCIATION (PHCC)
180 S. Washington Street
P.O. Box 6808
Falls Church, VA 22040
Ph: 800-533-7694
Fax: 703-237-7442
Internet: http://www.phccweb.org

PORCELAIN ENAMEL INSTITUTE (PEI)
5696 Peachtree Parkway, PO Box 920220
Norcross, GA 30092
Ph: 770-242-2632
Fax: 770-446-1452
Internet: http://www.porcelainenamel.com
e-mail: penamel@aol.com

POST-TENSIONING INSTITUTE (PTI)
1717 West Northern Avenue, Suite 114
Phoenix, AZ 85021
Ph: 602-870-7540
Fax: 602-870-7541
Internet: http://www.post-tensioning.org/

PRECAST/PRESTRESSED CONCRETE INSTITUTE (PCI)
209 West Jackson Blvd.
Chicago, IL 60606-6938
Ph: 312-786-0300
Fax: 312-786-0353
Internet: http://www.pci.org
e-mail: info@pci.org

REDWOOD INSPECTION SERVICE (RIS)
405 Efrente Drive, Suite 200
Novato, CA 94949
Ph: 415-382-0662
Fax: 415-382-8531
Internet: http://www.calredwood.org
E-Mail: cjjourdain@worldnet.att.net

RUBBER MANUFACTURERS ASSOCIATION (RMA)
1400 K St., NW, Suite 900
Washington, DC 20005
Ph: 202-682-4846
Fax: 202-682-4854
Internet: http://www.rma.org
Order Publications from:

The Mail Room
P. O. Box 3147
Medina, OH 44258
Ph: 800-325-5095 EXT 242 or 330-723-2978
Fax: 330-725-0576

SCIENTIFIC CERTIFICATION SYSTEMS (SCS)
1939 Harrison Street, Suite 400
Oakland, CA 94612
Ph: 510-832-1415
FAX: 510-832-0359
Internet: http://www.scs1.com

SCREEN MANUFACTURERS ASSOCIATION (SMA)
2850 South Ocean Boulevard, Suite 114
Palm Beach, FL 33480-5535
Ph: 561-533-0991
Fax: 561-533-7466
e-mail: fitzgeraldfscott@aol.com
Internet: http://www.smacentral.org

SEMICONDUCTOR EQUIPMENT AND MATERIALS INTERNATIONAL (SEMI)
3081 Zanker Road
San Jose, CA 95134
Phone: 1.408.943.6900
Fax: 1.408.428.9600
Internet: http://www.semi.org
E-mail: semihq@semi.org

SHEET METAL & AIR CONDITIONING CONTRACTORS' NATIONAL ASSOCIATION (SMACNA)
4201 Lafayette Center Dr.,
Chantilly, VA 20151-1209
Ph: 703-803-2980
Fax: 703-803-3732
Internet: http://www.smacna.org
e-mail: info@smacna.org

SPRI (SPRI)
200 Reservoir St., Suite 309A
Needham, MA 02494
Ph: 781-444-0242
Fax: 781-444-6111
Internet: http://www.spri.org
e-mail: spri@spri.org

SOCIETY OF AUTOMOTIVE ENGINEERS INTERNATIONAL (SAE)
400 Commonwealth Dr.
Warrendale, PA 15096-0001
Ph: 724-776-4841
Fax: 724-776-5760
Internet: http://www.sae.org

e-mail: custsvc@sae.org

SOCIETY OF MOTION PICTURE & TELEVISION ENGINEERS (SMPTE)
595 West Hartsdale Avenue
WhitePlains, New York 10607
PH: 914-761-1100
FAX: 914-761-3115
Internet: http://www.smpte.org

SPRAY POLYURETHANE FOAM ALLIANCE (SPFA)
American Plastics Council
1300 Wilson Boulevard, Suite 800
Arlington Virginia 22209
PH: 800-523-6154
FX: 703-252-0664
E-mail: feedback@sprayfoam.org
Internet: http://www.sprayfoam.org

SOLAR RATING AND CERTIFICATION CORPORATION (SRCC)
c/o FSEC, 1679 Clearlake Road
Cocoa, FL 32922-5703
PH: 321-638-1537
FAX: 321-638-1010
Internet: http://www.solar-rating.org

SOUTHERN CYPRESS MANUFACTURERS ASSOCIATION (SCMA)
400 Penn Center Boulevard, Suite 530
Pittsburgh, PA 15235
Ph: 412-829-0770
Fax: 412-829-0844
Internet: http://www.cypressinfo.org

SOUTHERN PINE INSPECTION BUREAU (SPIB)
4709 Scenic Highway
Pensacola, FL 32504-9094
Ph: 850-434-2611
Fax: 850-433-5594
e-mail: spib@spib.org
Internet: http://www.spib.org

STATE OF CALIFORNIA DEPARTMENT OF FOOD AND AGRICULTURE (CDFA)
Plant Health and Pest Prevention Services
Pest Exclusion Branch/Nursery, Seed and Cotton Program
1220 N Street, Room A-372
Sacramento CA 95814
PH: 916-653-0435
Internet: http://www.cdfa.ca.gov/phpps/nipm.htm

STATE OF CALIFORNIA DEPARTMENT OF TRANSPORTATION (CDT)
Publication Distribution Unit

1900 Royal Oaks Dr.
Sacramento, CA 95815
Ph: 916-445-3520 or 916-227-7000 (CA Transportation Lab)
Fax: 916-324-8997
Internet: http://www.dot.ca.gov

STATE OF MARYLAND CODE OF MARYLAND REGULATIONS (COMAR)
1700 Margaret Avenue
Annapolis, MD 21401
phone: 410-974-2486
fax: 410-974-2546
Internet: http://www.sos.state.md.us/sos/dsd/comar/html/comar.html

STATE OF NORTH CAROLINA ADMINISTRATIVE CODE (NCAC)
Internet: http://ncrules.state/nc.us

STATE OF VIRGINIA ADMINISTRATIVE CODE (VAC)
Virginia Code Commission
General Assembly Building, 2nd Floor
910 Capitol Street
Richmond, Virginia 23219
Phone: 804-786-3591
Fax: 804-692-0625
Internet: http://legis.state.va.us/statutesandregulations/admincode.htm

STEEL DECK INSTITUTE (SDI)
P.O. Box 25
Fox River Grove, IL 60021-0025
Ph: 847-462-1930
Fax: 847-462-1940
Internet: http://www.sdi.org
e-mail: Steve@sdi.org

STEEL DOOR INSTITUTE (SDI)
30200 Detroit Rd.
Cleveland, OH 44145-1967
Ph: 440-899-0010
Fax: 440-892-1404
Internet: http://www.steeldoor.org

STEEL JOIST INSTITUTE (SJI)
3127 Tenth Ave., North Ext.
Myrtle Beach, SC 29577-6760
Ph: 843-626-1995
Fax: 843-626-5565
Internet: http://www.steeljoist.org

STEEL TANK INSTITUTE (STI)
570 Oakwood Rd.
Lake Zurich, IL 60047
Ph: 847-438-8265

Fax: 847-438-8766
Internet: http://www.steeltank.com

STEEL WINDOW INSTITUTE (SWI)
1300 Sumner Ave.
Cleveland, OH 44115-2851
Ph: 216-241-7333
Fax: 216-241-0105
Internet: http://www.steelwindows.com

TECHNICAL ASSOCIATION OF THE PULP AND PAPER INDUSTRY (TAPPI)
P.O. Box 105113
Atlanta, GA 30348-5113
PH: 800-322-8686
FAX: 770-446-6947
Internet: http://www.tappi.org

THE SOCIETY FOR PROTECTIVE COATINGS (SSPC)
40 24th Street, 6th Floor
Pittsburgh, PA 15222-4656
Ph: 412-281-2331
Fax: 412-281-9992
Internet: http://www.sspc.org

TILE COUNCIL OF AMERICA (TCA)
100 Clemson Research Blvd
Anderson, SC 29625
Ph: 864-646-8453
FAX: 864-646-2821
Internet: http://www.tileusa.com
e-mail: literature@tileusa.com

TRUSS PLATE INSTITUTE (TPI)
583 D'Onofrio Dr., Suite 200
Madison, WI 53719
Ph: 608-833-5900
Fax: 608-833-4360
Internet: http://www.tpinst.org

TUBULAR EXCHANGER MANUFACTURERS ASSOCIATION (TEMA)
25 N. Broadway
Tarrytown, NY 10591
Ph: 914-332-0040
Fax: 914-332-1541
Internet: http://www.tema.org

TURFGRASS PRODUCERS INTERNATIONAL (TPI)
1855-A Hicks Road
Rolling Meadows, IL 60008
PH: 800-405-8873
FAX: 847-705-8347

Internet: http://www.turfgrasssod.org

UNDERWRITERS LABORATORIES (UL)
333 Pfingsten Rd.
Northbrook, IL 60062-2096
Ph: 847-272-8800
Fax: 847-272-8129
Internet: http://www.ul.com/
e-mail: northbrook@us.ul.com

UNI-BELL PVC PIPE ASSOCIATION (UBPPA)
2655 Villa Creek Dr., Suite 155
Dallas, TX 75234
Ph: 214-243-3902
Fax: 214-243-3907
Internet: http://www.uni-bell.org
e-mail: info@uni-bell.org

UNIVERSITY OF CALIFORNIA DIVISION OF AGRICULTURE AND NATURAL RESOURCES (UCDANR)
FRANKLIN BUILDING
1111 Franklin St., 6th floor
Oakland, CA 94607-5200
Internet: http://http://www.ucanr.org

U.S. AIR FORCE (USAF)
Air Force Publishing Distribution Center
Ph: 410-687-3330
E-mail: afpdc-service@pentagon.af.mil
Internet: http://www.e-publishing.af.mil/

U.S. ARMY (DA)
U.S. Army Publications Agency
Internet: http://www.usapa.army.mil/
AOK: 4/02
LOK: 7/02

U.S. ARMY CENTER FOR HEALTH PROMOTION AND PREVENTIVE MEDICINE (USACHPPM)
5158 Blackhawk Road
Aberdeen Proving Ground
MD 21010-5403
PH: 800-222-9698; website
Internet: http://chppm-www.apgea.army.mil

U.S. ARMY CORPS OF ENGINEERS (USACE)
Order CRD-C DOCUMENTS from:
U.S. Army Engineer Waterways Experiment Station
ATTN: Technical Report Distribution Section, Services Branch, TIC
3909 Halls Ferry Rd.
Vicksburg, MS 39180-6199

Ph: 601-634-2664
Fax: 601-634-2388
Internet: http://www.wes.army.mil/SL/MTC/handbook/handbook.htm

Order Other Documents from:
USACE Publications Depot
Attn: CEIM-SP-D
2803 52nd Avenue
Hyattsville, MD 20781-1102
Ph: 301-394-0081
Fax: 301-394-0084
Internet: http://www.usace.army.mil/publications
or http://www.hnd.usace.army.mil/techinfo/index.htm

U.S. ARMY EDGEWOOD RESEARCH, DEVELOPMENT, AND ENGINEERING CENTER (EA)
Aberdeen Proving Ground, MD
Internet: Unknown

U.S. ARMY ENVIRONMENTAL CENTER (AEC)
5179 Hoadley Road
Aberdeen Proving Ground, MD 21010-5401
Internet: http://aec.army.mil
Order from:
National Technical Information Services (NTIS)
5285 Port Royal Rd.
Springfield, VA 22161
Ph: 703-605-6000
Fax: 703-605-6900
Internet: http://www.ntis.gov

U.S. BUREAU OF RECLAMATION (BOR)
Denver Federal Center
P.O. Box 25007
Denver, CO 80225
Ph: 303-445-2080
Internet: http://www.usbr.gov
Order from:
National Technical Information
Services (NTIS)
5285 Port Royal Rd.
Springfield, VA 22161
Ph: 703-605-6000
Fax: 703-605-6900
Internet: http://www.ntis.gov

U.S. DEFENSE INTELLIGENCE AGENCY (DIA)
Defense Intelligence Analysis Center (DIAC)
MacDill Boulevard and Luke Avenue
Bolling AFB, MD
Internet: http://www.dia.mil

U.S. DEFENSE LOGISTICS AGENCY (DLA)

Andrew T. McNamara Building
8725 John J. Kingman Road
Fort Belvoir, VA 22060
Internet: http://www.dla.mil

U.S. DEPARTMENT OF AGRICULTURE (USDA)

Order AMS Publications from:
AGRICULTURAL MARKETING SERVICE (AMS)
Seed Regulatory and Testing Branch
USDA, AMS, LS Div.
Room 209, Bldg. 306, BARC-East
Beltsville, MD 20705-2325
Ph: 301-504-9430
Fax: 301-504-8098
Internet: http://www.ams.usda.gov/lsg/seed.htm
e-mail: jeri.irwin@usda.gov

Order Other Publications from:
U.S. Department of Agriculture
14th and Independence Ave., SW, Room 4028-S
Washington, DC 20250
Ph: 202-720-2791
Fax: 202-720-2166
Internet: http://www.usda.gov

U.S. DEPARTMENT OF COMMERCE (DOC)

1401 Constitution Avenue, NW
Washington, DC 20230
Internet: http://www.commerce.gov/

Order Publications From:
National Technical Information Service
5285 Port Royal Road
Springfield, VA 22161
Ph: 703-605-6000
Fax: 703-605-6900
Internet: http://www.ntis.gov

U.S. DEPARTMENT OF DEFENSE (DOD)

Order DOD Documents from:
National Technical Information Service
5285 Port Royal Road
Springfield, VA 22161
Ph: 703-605-6000
FAX: 703-605-6900
Internet: http://www.ntis.gov

Order Military Specifications, Standards and Related Publications from:
Department of Defense Single Stock Point for (DODSSP)
Defense Automation and Production Service (DAPS)
Bldg 4D
700 Robbins AV
Philadelphia, PA 19111-5094
Ph: 215-697-2179
Fax: 215-697-1462

Internet: http://www.dodssp.daps.mil

U.S. DEPARTMENT OF HOUSING AND URBAN DEVELOPMENT (HUD)
Order from:
HUD User
P.O. Box 6091
Rockville, MD 20849
Ph: 800-245-2691
Fax: 301-519-5767
Internet: http://www.huduser.org
e-mail: Huduser@aspensys.com

U.S. DEPARTMENT OF STATE (SD)
2201 C Street, NW
Washington, DC 20520
Ph: 202-647-4000
Internet: http://www.state.gov

U.S. DEPARTMENT OF TRANSPORTATION (DOT)
400 7th Street, SW
Washington, DC 20590
PH: 202-366-4000
Internet: http://www.dot.gov

U.S. ENVIRONMENTAL PROTECTION AGENCY (EPA)
Ariel Rios Building
1200 Pennsylvania Avenue, N.W.
Washington, DC 20460
Ph: 202-260-2090
FAX: 202-260-6257
Internet: http://www.epa.gov

NOTE --- Some documents are available only from:
National Technical Information Services (NTIS)
5285 Port Royal Rd.
Springfield, VA 22161
Ph: 703-605-6000
Fax: 703-605-6900
Internet: http://www.ntis.gov

U.S. FEDERAL AVIATION ADMINISTRATION (FAA)
Order for sale documents from:
Superintendant of Documents
P.O. Box 371954
Pittsburgh, PA 15250-7954
PH: 202-512-1800 (order desk)
Internet: http://www.gpo.gov

Order free documents from:
Federal Aviation Administration
Dept. of Transportation
Ardmore East Business Center
33410 75th Avenue

Landover, MD 20785
Ph:
FAX: 301-386-5394

Internet: http://www.faa.gov

U.S. FEDERAL COMMUNICATIONS COMMISSION (FCC)
445 12th Street SW
Washington, DC 20554
Phone: 888-CALL-FCC
Fax: 202-418-0232
Internet: http://www.fcc.gov
E-mail: fccinfo@fcc.gov

U.S. FEDERAL EMERGENCY MANAGEMENT AGENCY (FEMA)
500 C Street, SW
Washington, D.C. 20472
Phone: 202-566-1600
Internet: http://www.fema.gov

U.S. FEDERAL HIGHWAY ADMINISTRATION (FHWA)
Office of Highway Safety (HHS-31)
400 Seventh St., SW
Washington, DC 20590-0001
Ph: 202-366-0411
Fax: 202-366-2249
Internet: http://www.fhwa.dot.gov
Order from:

Superintendant of Documents
U. S. Government Printing Office
732 North Capitol Street, NW
Mailstop: SDE
Washington, DC 20401
Ph: 866-512-1800 or 202-512-1800
Fax: 202-512-2250
Internet: http://www.gpo.gov

U.S. GENERAL SERVICES ADMINISTRATION (GSA)
General Services Administration
1800 F Street, NW
Washington, DC 20405
PH: 202-501-0705

Order from:
General Services Administration
Federal Supply Service Bureau
1941 Jefferson Davis Highway
Arlington, VA 22202
PH: 703-605-5400
Internet: http://www.fss.gsa.gov/pub/fed-specs.cfm

U.S. NATIONAL ARCHIVES AND RECORDS ADMINISTRATION (NARA)

700 Pennsylvania Avenue, N.W.
Washington, D.C. 20408
Phone: 866-325-7208
Internet: http://www.archives.gov

Order documents from:
Superintendent of Documents
U.S.Government Printing Office
732 North Capitol Street, NW
Washington, DC 20401
Mailstop: SDE
Ph: 866-512-1800 or 202-512-1800
Fax: 202-512-2250
Internet: http://www.gpo.gov
E-mail: gpoaccess@gpo.gov

U.S. NAVAL FACILITIES ENGINEERING COMMAND (NAVFAC)
1510 Gilbert St.
Norfolk, VA 23511-2699
Ph: 757-322-4200
Fax: 757-322-4416
Internet: http://www.efdlant.navfac.navy.mil/LANTOPS_15

U.S. NAVAL FACILITIES ENGINEERING SERVICE CENTER (NFESC)
1100 23rd Avenue
Port Hueneme, CA 93043-4370
Ph: 805-982-4980
Internet: http://www.nfesc.navy.mil

WATER ENVIRONMENT FEDERATION (WEF)
601 Wythe St.
Alexandria, VA 22314-1994
Ph: 703-684-2452
Fax: 703-684-2492
Internet: http://www.wef.org

WATER QUALITY ASSOCIATION (WQA)
4151 Naperville Rd.
Lisle, IL 60532
Ph: 630-505-0160
Fax: 630-505-9637
Internet: http://www.wqa.org
e-mail: info@mail.wqa.org

WEST COAST LUMBER INSPECTION BUREAU (WCLIB)
P.O. Box 23145
Portland, OR 97281
Ph: 503-639-0651
Fax: 503-684-8928
Internet: http://www.wclib.org
e-mail: info@wclib.org

WESTERN WOOD PRESERVERS INSTITUTE (WWPI)
7017 N.E. Highway 99 # 108
Vancover, WA 98665
Ph: 360-693-9958
Fax: 360-693-9967
Internet: http://www.wwpinstitute.org
e-mail: info@wwpinstitute.org

WESTERN WOOD PRODUCTS ASSOCIATION (WWPA)
Yeon Bldg.
522 SW 5th Ave.
Suite 500
Portland, OR 97204-2122
Ph: 503-224-3930
Fax: 503-224-3934
Internet: http://www.wwpa.org
e-mail: info@wwpa.org

WINDOW AND DOOR MANUFACTURERS ASSOCIATION (WDMA)
1400 East Touhy Ave., Suite 470
Des Plaines, IL 60018
Ph: 847-299-5200 or 800-223-2301
Fax: 708-299-1286
Internet: http://www.wdma.com
e-mail: admin@wdma.com

WOOD MOULDING AND MILLWORK PRODUCERS ASSOCIATION (WMMPA)
507 First Street
Woodland, CA 95695
Ph: 530-661-9591 or 800-550-7889
Fax: 530-661-9586
Internet: http://www.wmmpa.com

-- End of Section --

SECTION 01451
CONTRACTOR QUALITY CONTROL
DESIGN-BUILD CONSTRUCTION
NYD REV. 6/2001

PART 1 - GENERAL

1.1 REFERENCES

The publications listed below form a part of this specification to the extent referenced. The publications are referred to in the text by basic designation only.

AMERICAN SOCIETY FOR TESTING AND MATERIALS (ASTM)

ASTM D 3740 (1996)	Evaluation of Agencies Engaged in the Testing and/or Inspection of Soil and Rock as Used in Engineering Design and Construction
ASTM E 329 (1995b)	Agencies Engaged in the Testing and/or Inspection of Materials Used in Construction

1.2 PAYMENT

No separate payment will be made for providing and maintaining an effective Quality Control program, and all costs associated therewith shall be included in the applicable unit prices or lump-sum prices contained in the Bidding Schedule.

PART 2 - PRODUCTS (Not Applicable)

PART 3 - EXECUTION

3.1 GENERAL

The Contractor is responsible for quality control and shall establish and maintain an effective quality control system in compliance with the Contract Clause titled "Inspection of Construction." The quality control system shall consist of plans, procedures, and organization necessary to produce an end product which complies with the contract requirements. The system shall cover all design and construction operations, both onsite and offsite, and shall be keyed to the proposed design and construction sequence. Other sections of the contract documents may also require separate specially-qualified individuals. The CQC organization will coordinate the activities of these individuals. The project Superintendent will be held responsible for the quality of work on the job and is subject to removal by the Contracting Officer for non-compliance with quality requirements specified in the contract. The project superintendent in this context shall mean the on-site individual with the responsibility for the overall management of the project

including logistics and production.

3.2 QUALITY CONTROL PLAN

3.2.1 General

The Contractor shall furnish for review by the Government, not later than 10 days after receipt of notice to proceed, the Contractor Quality Control (CQC) Plan proposed to implement the requirements of the Contract Clause titled "Inspection of Construction." The plan shall identify personnel, procedures, control, instructions, test, records, and forms to be used. The Government will consider an interim plan to cover design operations for the first 60 days. The complete CQC plan must then be submitted no later than 60 days after Notice to Proceed. Design and Construction will be permitted to begin only after acceptance of the CQC Plan or interim plan.

3.2.2 Design Quality Control (DQC)

The Contractor shall provide and maintain an effective quality control program which will assure that all design services and products required for construction of this design-build contract are performed and provided in a manner that meets professional architectural and engineering quality standards and the requirements of the contract. The Contractor shall submit include elements and details of the DQC program in the CQC Plan.

As a minimum, all design documents shall be technically reviewed by competent, independent reviewers identified in the DQC Plan. The same element that produced the product shall not perform the independent technical review (ITR). In the DQC section of the CQC Plan the contractor shall cross-reference the Lessons Learned Databases provided by the Government.

The Contractor shall correct errors and deficiencies in the design documents prior to submitting them to the Government.

Design Schedule: The procedure for design schedule shall be included in the DQC portion of the CQC Plan. The Contractor shall include the design schedule in the master project schedule, showing the sequence of events involved in carrying out the project tasks within the specific contract period. This should be at a detailed level of scheduling sufficient to identify all major tasks including those that control the flow of work. The schedule shall include review and correction periods associated with each item. This should be a forward planning as well as a project monitoring tool. The schedule must reflect calendar days and not dates for each activity. If the schedule is changed, the Contractor shall submit a revised schedule reflecting the change within seven calendar days. Design schedule shall be coordinated with specification section “Project Schedule”.
The Contractor shall include in the DQC portion of the CQC Plan the discipline-specific checklists to be used during the design and quality control of each design submittal. These completed checklists shall also be submitted at each design phase as part of the project

documentation. Sample checklists can be found in Corps of Engineers Engineering Regulations ER 1110-1-12, available on the internet.

DQC shall be implemented by an assigned person with the Contractor's organization who has the responsibility of being present during the times work is in progress shall be cognizant of and assure that all documents on the project have been coordinated and that appropriate submittals of design products are current. This individual shall be a person who has verifiable engineering or architectural design experience and is a registered professional engineer or architect. Contractor shall indicate the name qualifications and responsibility and notify the Contracting Officer, in writing, of the name of the individual and the name of an alternate person assigned to the position.

3.2.3 Content of the CQC Plan

The CQC plan shall include, as a minimum, the following to cover all design and construction operations, both onsite and offsite, including work by subcontractors, designers of record, consultants, architect/engineer's (A/E's), fabricators, suppliers, and purchasing agents:

a. Details of the DQC system indicated above.

b. A description of the quality control organization, including a chart showing lines of authority and acknowledgment that the CQC staff shall implement the three phase control system for all aspects of the work specified. The staff shall include a CQC System Manager who shall report to the project manager or someone higher in the Contractor's organization. Project manager in this context shall mean the individual with responsibility for the overall management of the project including quality and production.

c. The name, qualifications (in resume format), duties, responsibilities, and authorities of each person assigned a CQC function. Clear indication that CQC System Manager will have no duties other than Quality Control.

d. A copy of the letter to the CQC System Manager signed by an authorized official of the firm which describes the responsibilities and delegates sufficient authorities to adequately perform the functions of the CQC System Manager, including authority to stop work which is not in compliance with the contract. The CQC System Manager shall issue letters of direction to all other various quality control representatives outlining duties, authorities, and responsibilities. Copies of these letters will also be furnished to the Government.

e. Procedures for scheduling, reviewing, certifying, and managing submittals, including those of subcontractors, designers of record, consultants, A/E's, off-site fabricators, suppliers, and purchasing agents. These procedures shall be in accordance with Section 01330 - SUBMITTAL PROCEDURES.

f. Control, verification, and acceptance testing procedures for each specific test to

include the test name, specification paragraph requiring test, feature of work to be tested, test frequency, and person responsible for each test. (Laboratory facilities will be approved by the Contracting Officer.) The Contractor shall incorporate all tests required by the contract (including systems commissioning and operating tests) to derive the above list of testing information which shall be presented in matrix form as part of the CQC Plan. This matrix shall be suitable for use by the Contractor and the Government as a checklist to control testing to be done on the contract. Coordinate any additional test submission or plan requirements for Mechanical and Electrical Systems with appropriate specialized specification section if applicable.

g. Procedures for tracking preparatory, initial, and follow-up control phases and control, verification, and acceptance tests including documentation. Provide matrix of Preparatory and Initial inspections including specification reference paragraph, name of the Definable Feature of Work, and spaces for date performed, results and names of attendees.

h. Procedures for tracking construction deficiencies from identification through acceptable corrective action. These procedures will establish verification that identified deficiencies have been corrected.

i. Reporting procedures, including proposed reporting formats. The Contractor shall utilize a Government-furnished software program titled "QCS" (Quality Control System). See specification section QUALITY CONTROL SYSTEM for additional details. Sample forms from QCS will be submitted with CQC Plan.

j. A list of the definable features of work. A definable feature of work is a task which is separate and distinct from other tasks and has separate control requirements. It could be identified by different trades or disciplines, or it could be work by the same trade in a different environment. Although each section of the specifications may generally be considered as a definable feature of work, there is frequently more than one definable feature under a particular section. This list will cover all features of work on the project, and will be agreed upon during the coordination meeting.

k. A brief explanation of the duties of the CQC organization with respect to safety. Note that separate Accident Prevention Plan and Hazards Analysis is required for submission and acceptance.

l. Contractor’s plan for training all CQC personnel in the CQC System.

3.2.4 Acceptance of Plan

Acceptance of the Contractor's plan is required prior to the start of design and/or construction. Acceptance is conditional and will be predicated on satisfactory performance during the design and construction phases. The Government reserves the right to require the Contractor to make changes in his CQC plan and operations including removal of personnel, as necessary, to obtain the quality specified.

3.2.5 Notification of Changes

After acceptance of the CQC plan, the Contractor shall notify the Contracting Officer in writing a minimum of seven calendar days prior to any proposed change. Proposed changes are subject to acceptance by the Contracting Officer.

3.3 COORDINATION MEETING

After the Pre-design Conference, before start of design and/or construction, and prior to acceptance by the Government of the Quality Control Plan, the Contractor shall meet with the Contracting Officer or Authorized Representative and discuss the Contractor's quality control system. The CQC Plan shall be submitted for review a minimum of 14 calendar days prior to the Coordination Meeting. The initial plan submitted must be found acceptable by the Government before the Coordination Meeting can be held. During the meeting, a mutual understanding of the system details shall be developed, including the forms for recording the CQC operations, design activities, control activities, testing, administration of the system for both onsite and offsite work, and the interrelationship of Contractor's Management and control with the Government's Quality Assurance. Minutes of the meeting shall be prepared by the Government and signed by both the Contractor and the Contracting Officer. The minutes shall become a part of the contract file. There may be occasions when subsequent conferences will be called by either party to reconfirm mutual understandings and/or address deficiencies in the CQC system or procedures which may require corrective action by the Contractor.

3.4 QUALITY CONTROL ORGANIZATION

3.4.1 General

The requirements for the CQC organization are a CQC System Manager, Designer of Record and sufficient number of additional qualified personnel to ensure contract compliance. The Contractor shall provide a CQC organization, which shall be at the site at all times during progress of the work and which shall have complete authority to take any action necessary to ensure compliance with the contract. All CQC staff members shall be subject to acceptance by the Contracting Officer.

3.4.2 CQC System Manager

The Contractor shall identify as CQC System Manager an individual within his organization at the site of the work who shall be responsible for overall management of CQC and have the authority to act in all CQC matters for the Contractor. The CQC System Manager shall be a graduate engineer, graduate architect, or a graduate of construction management, or shall hold a state Professional Engineer's license, with a minimum of 2 years construction experience on construction similar to this contract, one year of which as a Quality Control Representative. The CQC Manager may also be a construction person with a minimum of 4 years in related work, one year of which as a QC Representative. This CQC System Manager shall be on the site at all times during construction and will be employed by the prime Contractor. An alternate for the

CQC System Manager will be identified in the plan to serve in the event of the System Manager's absence. The requirements for the alternate will be the same as for the designated CQC System Manager. The CQC System Manager shall be assigned no duties other than Quality Control.

3.4.3 Organizational Expertise

The CQC organization, which includes the CQC System Manager and additional qualified personnel, must as a minimum possess general corporate technical knowledge of all aspects of the project, and must successfully execute the CQC System on all aspects of the project. Individuals possessing experience in specialized areas shall be added to the organization as required during periods when such specialty areas are being executed. Examples of such specialized areas would include HVAC, electrical distribution and substations, roofing, telecommunication systems, fire protection and alarm systems, computer installations, specialized welding, specialized finishes, precast concrete installation, modular housing, specialized geotech work, dredging, sand placement and surveying, chemical data acquisition, hazardous material removal and disposal, medical monitoring, etc., depending on the nature of the particular project. The Contractor must demonstrate that such additional qualified personnel have received sufficient training and indoctrination into the CQC system, and that these personnel properly execute the requirements of the CQC System within their areas of expertise.

3.4.4 Additional Requirement

In addition to the above experience and education requirements the CQC System Manager shall have completed within the last five years the course entitled "Construction Quality Management for Contractors". This course is given by Government personnel and is of two-day duration. The Government will provide one instruction manual for the course.

3.4.5 Organizational Changes

The Contractor shall maintain the CQC Organization at full strength at all times. When it is necessary to make changes to the organization, the Contractor shall revise the CQC Plan to reflect the changes and submit the changes to the Contracting Officer for acceptance.

3.5 SUBMITTALS

For purposes of this contract, the term submittals refers to both design submittals and shop-drawing type submittals. Submittals shall be made as specified in Section 01330 SUBMITTAL PROCEDURES. The CQC organization shall be responsible for certifying that all submittals are in compliance with the contract requirements and are submitted in accordance with the date on the submittal register. CQC personnel shall also make physical checks of materials and equipment before installation to insure compliance with approved shop drawings.

3.6 CONTROL

Contractor Quality Control is the means by which the Contractor ensures that the construction, to include that of subcontractors and suppliers, complies with the requirements of the contract. At least three phases of control shall be conducted by the CQC System Manager for each definable feature of work as follows:

3.6.1 Preparatory Phase

This phase shall be performed prior to beginning work on each definable feature of work after all required plans/documents/materials are approved/accepted, and after copies are at the worksite, and shall include:

a. A review of each paragraph of applicable specifications.

b. A review of the contract drawings.

c. A check to assure that all materials and/or equipment have been tested, submitted, and approved.

d. Review of provisions that have been made to provide required control inspection and testing.

e. Examination of the work area to assure that all required preliminary work has been completed and is in compliance with the contract.

f. A physical examination of required materials, equipment, and sample work to assure that they are on hand, conform to approved shop drawings or submitted data, and are properly stored.

g. A review of the appropriate activity hazard analysis to assure safety requirements are met per EM 385-1-1, "Safety and Health Requirements Manual".

h. Discussion of procedures for controlling quality of the work including repetitive deficiencies. Document construction tolerances and workmanship standards for that feature of work.

i. A check to ensure that the portion of the plan for the work to be performed has been accepted by the Contracting Officer.

j. Discussion of the initial control phase.

k. The Government shall be notified at least 48 hours in advance of beginning the preparatory control phase meeting. This phase shall include a meeting conducted by the CQC System Manager and attended by the superintendent, other CQC personnel (as applicable), and the foreman responsible for the definable feature. The results of the preparatory phase actions shall be documented by separate minutes prepared by the CQC System Manager and

attached to the daily CQC report. The Contractor shall clearly indicate its intent and plan for communication of the results of the preparatory phase to applicable workers, to include materials, construction methods, workmanship standards, safety considerations and procedures, and preparatory phase meeting minutes.

3.6.2 Initial Phase

This phase shall be accomplished at the beginning of a definable feature of work (DFW) when the accomplishment of a representative sample of the work is impending.
The following shall be accomplished:

a. A check of the portion of work done to ensure that it is in full compliance with contract requirements. Review minutes of the preparatory meeting.

b. Verify adequacy of controls to ensure full contract compliance. Verify required control inspection and testing.

c. Establish level of workmanship and verify that it meets minimum acceptable workmanship standards. Compare with required sample panels as appropriate.

d. Resolve all differences.

e. Check safety to include compliance with and upgrading of the safety plan and activity hazard analysis. Review the activity analysis with each worker.

f. The Government shall be notified at least 48 hours in advance of beginning the initial phase meeting. This phase shall include a meeting conducted by the CQC System Manager and attended by the superintendent, other CQC personnel (as applicable), the foreman responsible for the definable feature and the work crew(s) for the appropriate DFW. Separate minutes of this phase shall be prepared by the CQC System Manager and attached to the daily CQC report. Exact location (i.e. CQC Report number) of initial phase shall be indicated for future reference and comparison with follow-up phases.

3.6.3 Follow-up Phase

Daily checks shall be performed to assure control activities, including control testing, are providing continued compliance with contract requirements, until completion of the particular feature of work. The checks shall be made a matter of record in the CQC documentation. Final follow-up checks shall be conducted and all deficiencies corrected prior to the start of additional features of work which may be affected by the deficient work. The Contractor shall not build upon or conceal non-conforming work

3.6.4 Additional Preparatory and Initial Phases

Additional preparatory and initial phases shall be conducted on the same definable features of work if the quality of on-going work is unacceptable, if there are changes in the

applicable CQC staff, onsite production supervision or work crew, if work on a definable feature is resumed after a substantial period of inactivity, or if other problems develop.

3.6.5 Definable Feature of Work: Definition and Discussion

A Definable Feature of Work (DFW) is a portion of work consisting of materials, equipment, supplies and procedures which are closely related to each other, have the same control and will be accomplished by the same work crew to completion. A DFW must be sufficiently small so that control of the work (i.e. communication of requirements to workers, inspection of materials and workmanship and correction of deficiencies) will be easily accomplished. Some examples for various types of projects are:

* Rough-in of electrical boxes and wiring methods

* Lighting fixtures, receptacles, and accessories

* Panelboards, circuit breakers and motors.

* Water supply piping, fittings and supports

* DWV piping, fittings and supports for plumbing

* Concrete reinforcement and formwork

* Concrete mixing, placement, curing and finishing

* Testing Procedure for contaminated soil, materials and storage tank contents

* Storage Tank disassembly and removal

* Setting up of decontamination area, exclusion zones and standard safety procedures for asbestos removal

* Asbestos removal and disposal procedures

* Chemical Data Acquisition

* Preparation, removal and disposal of contaminated material

* Dredging and placement.

3.7 TESTS

3.7.1 Testing Procedure

The Contractor shall perform specified or required tests to verify that control measures are adequate to provide a product which conforms to contract requirements. Upon request, the Contractor shall furnish to the Government duplicate samples of test specimens for possible testing by the Government. Testing includes operation and/or acceptance tests when specified. The Contractor shall procure the services of a laboratory which has been assurance inspected by the Corps of Engineers within the last two years. The Contractor shall perform the following activities and record and provide the following data:

a. Verify that testing procedures comply with contract requirements.

b. Verify that facilities and testing equipment are available and comply with testing standards.

c. Check test instrument calibration data against certified standards.

d. Verify that recording forms and test identification control number system, including all of the test documentation requirements, have been prepared.

e. Results of all tests taken, both passing and failing tests, will be recorded on the CQC report for the date taken. Specification paragraph reference, location where tests were taken, and the sequential control number identifying the test will be given. If approved by the Contracting Officer, actual test reports may be submitted later with a reference to the test number and date taken. An information copy of tests performed by an off site or commercial test facility will be provided directly to the Contracting Officer. Failure to submit timely test reports as stated may result in nonpayment for related work performed and disapproval of the test facility for this contract. The Contractor shall maintain a test log of all tests performed, by type, date, and specification section.

3.7.2 Testing Laboratories

3.7.2.1 Capability Check

The Government reserves the right to check laboratory equipment and calibration in the proposed laboratory for compliance with the standards set forth in the contract specifications and to check the laboratory technician's testing procedures and techniques. Laboratories utilized for testing soils, concrete, asphalt, aggregate and steel shall meet criteria detailed in ASTM D 3740 and ASTM E 329. The Government requires a Corps of Engineers capability check of the laboratory which the contractor proposes to perform tests on soils, concrete, asphalt, aggregate and steel. If the laboratory proposed has not had the required Corps of Engineers capability check within the last two years, it will be performed by the Corps of Engineers at a cost of $7200 to the contractor. This cost will be paid by the Contractor via check directly to the Corps of Engineers Laboratory performing the inspection and report.

3.7.2.2 Capability Recheck

If the selected laboratory fails the capability check, the Contractor will be assessed a charge of $7200 to reimburse the Government for each succeeding recheck of the laboratory or the checking of a subsequently selected laboratory.

3.7.3 On-Site Laboratory

The Government reserves the right to utilize the Contractor's control testing laboratory and equipment to make assurance tests and to check the Contractor's testing procedures, techniques, and test results at no additional cost to the Government.

3.7.4 Furnishing or Transportation of Samples for Testing

Costs incidental to the transportation of samples or materials will be borne by the Contractor. Samples of materials for test verification and acceptance testing by the Government shall be delivered to the Corps of Engineers Division Laboratory, as designated by the Government Representative. Coordination for each specific test, exact delivery location and dates will be made through the Area Office.

3.8 COMPLETION INSPECTION

3.8.1 Punch-Out Inspection

Near the completion of all work or any increment thereof established by a completion time stated in the Special Clause entitled "Commencement, Prosecution, and Completion of Work," or stated elsewhere in the specifications, the CQC System Manager shall conduct an inspection of the work and develop a "punch list" of items which do not conform to the approved drawings and specifications. Such a list of deficiencies shall be included in the CQC documentation, as required by paragraph DOCUMENTATION below, and shall include the estimated date by which the deficiencies will be corrected. The CQC System Manager or staff shall make a second inspection to ascertain that all deficiencies have been corrected. Once this is accomplished the Contractor shall notify the Government that the facility is ready for the Government's "Pre-final" inspection.

3.8.2 Pre-Final Inspection

The Government will perform this inspection to verify that the facility is complete and ready to be occupied. A Government “Pre-Final Punch List” may be developed as a result of this inspection. The Contractor's CQC System Manager shall ensure that all items on this list have been corrected before notifying the Government so that a Final inspection with the customer can be scheduled. Any items noted on the Pre-Final inspection shall be corrected in a timely manner. These inspections and any deficiency corrections required by this paragraph shall be accomplished within the time slated for completion of the entire work or an particular increment thereof if the project is divided into increments by separate completion dates.

3.8.3 Final Acceptance Inspection

The Contractor's Quality Control Inspection personnel, plus the superintendent or other primary management person, and the Contracting Officer's Representative shall be in attendance at this inspection. Additional Government personnel including, but not limited to, those from Base/Post Civil Facility Engineer user groups, and major commands may also be in attendance. The final acceptance inspection will be formally scheduled by the Contracting Officer based upon results of the Pre-Final inspection. Notice shall be given to the Contracting Officer at least 14 days prior to the final acceptance inspection and shall include the Contractor's assurance that all specific items previously identified to the Contractor as being unacceptable, along with all remaining work performed under the contract, will be complete and acceptable by the date scheduled for the final acceptance inspection. Failure of the Contractor to have all contract work acceptably complete for this inspection will be cause for the Contracting Officer to bill the Contractor for the Government's additional inspection cost in accordance with the contract clause titled "Inspection of Construction".

3.8.4 Post Completion Feedback Meeting and Preparation of Written Minutes
At the completion of this project, the CQC Systems Manager will host a meeting to review the project and to discuss lessons learned during the construction of the project. This meeting should be scheduled for 4 hours on-site and should be attended by the Project Manager and representatives of the major subcontractors, including mechanical and electrical. The Contracting Officer will invite members of the design team to participate in this meeting.

3.9 DOCUMENTATION

The Contractor shall maintain current records providing factual evidence that required quality control activities and/or tests have been performed. These records shall include the work of subcontractors and suppliers and shall be on an acceptable form that includes, as a minimum, the following information:

a. Contractor/subcontractor and their area of responsibility.

b. Operating plant/equipment with hours worked, idle, or down for repair.

c. Work performed each day, giving location, description, and by whom. When Network Analysis (NAS) is used, identify each phase of work performed each day by NAS activity number.

d. Test and/or control activities performed with results and references to specifications/drawings requirements. The control phase should be identified (Preparatory, Initial, Follow-up). List deficiencies noted along with corrective action.

e. Quantity of materials received at the site with statement as to acceptability, storage, and reference to specifications/drawings requirements.

f. Submittals reviewed, with contract reference, by whom, and action taken.

g. Offsite surveillance activities, including actions taken.

h. Job safety evaluations stating what was checked, results, and instructions or corrective actions.

i. Instructions given/received and conflicts in plans and/or specifications.

j. Contractor's verification statement.

These records shall indicate a description of trades working on the project; the number of Personnel working; weather conditions encountered; and any delays encountered. “N/A” shall be entered into any field for which no entry is intended. These records shall cover both conforming and deficient features and shall include a statement that equipment and materials incorporated in the work and workmanship comply with the contract. The original and one copy of these records in report form shall be furnished to the Government daily within 16 hours after the date covered by the report, except that reports need not be submitted for days on which no work is performed. As a minimum, one report shall be prepared and submitted for every 7 days of no work and on the last day of a no work period. All calendar days shall be accounted for throughout the life of the contract. The first report following a day of no work shall be for that day only. Reports shall be signed and dated by the CQC System Manager. The report from the CQC System Manager shall include copies of test reports and copies of reports prepared by all subordinate quality control personnel. All documentation is expected to be literate, legible and complete.

3.9.1 Correspondence

The Contractor shall establish and implement a serialized numbering system for letters sent to the Government. The numbering system shall identify the contract number and shall progress sequentially starting with the number one (1) and continuing thereafter without break in numbering. All letters sent to the Government shall include a subject heading which identifies the Contract Clause Number, Special Clause Number, or Technical Provision Number, and the particular subject item addressed by the letter.

3.10. SAMPLE FORMS

(Note: If the Quality Control System (QCS) Module is required to be used by the contractor for the QC System as indicated elsewhere in this contract, Contractor will generate all reports in the QCS System, and attached forms will serve as guidance only. Otherwise forms contained herein will be used by the by CQC Staff for CQC System reporting).

a. The 2-page form at the end of the section will be used for the basic CQC Report. CQC personnel shall attach continuation sheets as required for any entries which cannot fit on the basic form. Preparatory and Initial Inspections, when performed, shall be indicated on the basic CQC report and minutes for each inspection shall be attached. Minutes will consist of a list of

specific requirements for materials, procedures or equipment to be employed and shall also include any understandings reached or items of special importance discussed.

b. In addition, outstanding deficiencies shall be listed on the form "List of Outstanding Deficiencies" at the end of this section and shall be attached to each CQC report. As deficiencies are corrected, they are to be acknowledged on the basic CQC report and shall be deleted from the list.

c. Form at the end of this section entitled "CQC Test Report List" shall be used by the Contractor to track testing to be done as the project progresses, and also to summarize the Contractor's Quality Control testing to be reported on the CQC Plan.

d. Form "Record of Preparatory and Initial Inspections" at the end of this section shall be used by the Contractor to track Preparatory and Initial inspections as the project progresses and also to summarize these required inspections as part of the CQC Plan.

e. Additional reporting forms pertaining to specialized activities may be included herein or elsewhere in the contract, and shall be used for reporting as indicated.

3.11 NOTIFICATION OF NONCOMPLIANCE

The Contracting Officer will notify the Contractor of any detected noncompliance with the foregoing requirements. The Contractor shall take immediate corrective action after receipt of such notice. Such notice, when delivered to the Contractor at the worksite, shall be deemed sufficient for the purpose of notification. If the Contractor fails or refuses to comply promptly the Contracting Officer may issue an order stopping all or part of the work until satisfactory corrective action has been taken. No part of the time lost due to such stop orders shall be made the subject of claim for extension of time or for excess costs or damages by the Contractor. Deficiencies cited and verbal instruction instructions given to the Contractor by the Government Representative shall be entered into that day’s CQC report.

(FORMS FOLLOW)

-- End of Section ---

NY Dist. Sept. 2003

SECTION 01452

TESTING FOR MECHANICAL AND ELECTRICAL SYSTEMS

1. Applicability.
This section applies to all mechanical and electrical systems and all systems using electromagnetically driven equipment, pneumatic or electronic systems; high and low voltage electrical distribution systems (except branch panels) and to any system which incorporates this section into other parts of the specification by reference. For purposes of this section a "system" is an entity comprised of a series of closely related interdependent components and which is capable of independent performance of a useful function. System components shall include all software and programming as applicable for the system. Some typical examples include:

a. Independently functioning HVAC Systems.

b. Fire Alarm Systems.

c. Public Address Systems.

d. Sprinkler Systems including alarms.

e. Telephone Systems including line protectors, splices cables, switching equipment, outlets and instruments.

f. Intrusion Detection System.

g. High Voltage Equipment including cable, splices, switchgear, relays, circuit breakers, fuses, transformers, instrumentation, etc.

h. Low Voltage Switchboard including incoming and outgoing feeders, circuit protection and all accessories.

2. Test Plan.

a. Not later than sixty days after Notice to Proceed, in accordance with Section "Submittals" and other paragraphs of the technical provisions, the Contractor shall submit a list for approval consisting of all systems for which test plans are required. This list will be reviewed by the Government and any systems found to be missing will be required to be added by the Contractor, and appropriate test plans submitted. No work will be permitted on any of the above systems until this list is submitted.
b. The Contractor shall develop test plans and schedule operational testing for the systems in the approved list. The testing shall be in accordance with the requirements in the appropriate technical provisions and shall include as a minimum the requirements below. All testing required by applicable codes, standards, utility companies, manufacturers, suppliers, etc. shall be incorporated into the Contractor's test plans. Test plans shall list all equipment required to perform the tests, and any Government support required. It shall be in sufficient detail to permit a step-by step approach to the test and to demonstrate that the systems operate as intended by the contract documents. It shall describe as a minimum:

1. What system is being tested including a listing of all components to be tested.

2. What individual or organization will perform testing, who will certify the tests, and qualifications of test personnel.

3. A step by step narrative of the testing procedure to be used to demonstrate contract compliance including all governing standards, such as "sequence of controls", "ASTM Standard XXX"; or IEEE Standard XXX", etc.

4. What testing equipment will be utilized.

5. What operator interaction is required.

6. What results are to be expected.

7. Seasonal limitations, if any, including date(s) of proposed testing.

8. A complete schematic diagram (electrical, pneumatic) showing all components, and block diagram.

9. A checklist shall be developed to be used during the operational test.

c. Test plans shall be submitted for approval for all systems contained on the list submitted per para. 2a above. It is also desirable to submit all test plans as soon as possible so that the progress of the project and corresponding payments will proceed on schedule.

3. Testing Process.

a. Outlined below are a number of events relating to the status of the test plan and testing. The corresponding percentages indicate the maximum percentage of the value of the system which will be permitted to be installed after the successful completion of the corresponding event indicated, for all systems to which this section applies. Events must be completed sequentially. Any work performed in excess of the permitted percentages will be at the Contractor's own risk and will not be paid until the event corresponding to the percentage of system value permitted to be installed is successfully completed:

EVENT	MAX. % of SYSTEM VALUE PERMITTED TO BE INSTALLED
1. Contractor has submitted list of systems that require test plans to be approved, and system work is ongoing but no test plan submitted.	50
2. Test Plan Submitted	65
3. *Test Plan Approved	80
4. Successful completion of tests including submission of required documents, reports (i.e. balancing reports for all HVAC Systems),	**100

Operation and Maintenance Manuals spare parts, and spare parts data.

* The Government will process the submittal in accordance with the time frames indicated in the specification section "Submittals". If the test plan is disapproved the Government has an additional 30 days to review the resubmittal from the date it receives the resubmittal.

**If a system involves both heating and cooling modes and one mode has been successfully tested this percentage shall be reduced to 90% until the testing is completed.

b. The Contractor may proceed with events as indicated in the above table for each system separately.

4. Operational tests including performance tests shall be conducted for an entire system, not component parts only. Tests may be conducted only after an entire system has been completely installed. Contractor shall provide a minimum of 14 days notice to the Contracting Officer of scheduled tests. This notice must include the Contractor's assurance that all installed work previously identified to the Contractor as being unacceptable along with all remaining work associated with the respective system will be complete and acceptable by the date scheduled for the operational test. Failure of the Contractor to have all contract work acceptably complete for this test will be cause for the Contracting Officer to bill the Contractor for the Government's additional inspection costs.

5. For each system the Contractor shall obtain the services of an experienced professional who shall certify that the operational test was conducted in accordance with the approved test plan and the results of this test meet all the contract requirements. These individuals must have a minimum of eight years experience in the testing of the particular system being tested and shall also meet qualifications (if any) set forth in other technical sections of the contract specifications.

6. For Design-Build projects, the Contractor's Designer of Record for the system shall participate in HVAC System Commissioning.

7. When considering the value of a system for payment purposes the following components shall be counted as part of a "system": All electro-magnetically driven equipment; pneumatic or electric control system; gauges, dampers, valves, actuators, controllers, pipes, test sensing elements, logic/processors, CPU's, ducts, insulation, wiring, conduit, switchgear, and all other mechanical or electrical components, devices or equipment which are essential to the proper function of the system such as pumps, motors, air- handling units, chillers, cooling towers, etc. Software programs and any refrigerants are also considered "parts" of a system.

8. The requirements contained in this section supplement other testing requirements contained in the contract documents. If a conflict exists between the requirements of this section and other parts of the contract documents, the requirements of this section shall take precedence.

--End of Section--

SECTION 01560
ENVIRONMENTAL PROTECTION (PROJECT SITE)

10/03

PART 1 GENERAL

1.1 DEFINITIONS

For the purpose of this specification environmental pollution is defined as the presence of chemical, physical, or biological elements or agents which adversely affect human health or welfare, unfavorably alter ecological balances of importance to human life, and may affect other species and natural resources of importance to man.

1.2 REFERENCES

The publications listed below form a part of this specification to the extent referenced. The publications are listed in the text by basic designation only.

CODE OF FEDERAL REGULATIONS (CFR)

29 CFR 1910.94-SUBPART G	Occupational Health and Environmental Control
40 CFR 261	Identification and Listing of Hazardous Waste
40 CFR 262	Generators of Hazardous Waste
40 CFR 263	Transporters of Hazardous Waste
40 CFR 264	Owners and Operators of Hazardous Waste Treatment, Storage, and Disposal Facilities
49 CFR 178	Shipping Container Specifications

CORPS OF ENGINEERS (COE)

EM 385-1-1	Safety and Health Requirements Manual (September 1996)
EP-1165-2-304	Perspective on Flood Plain Regulations for Flood Plain Management (1976)
ER-1165-2-26	Implementation of Executive Order 11988 on Flood Plain Management (March 1984)

NEW YORK STATE CODE
Erosion and Sediment Control

Stormwater Management Design Manual, AUG 03	**New York State, Center for Watershed Protection for New York State Department of Environmental Conservation (NYSDEC)**
New York Guidelines for Urban Erosion and Sediment Control	**Soil & Water Conservation Society**

1.3 SUBMITTALS

The contractor shall submit the following in accordance with Section 01330 SUBMITTAL PROCEDURES.

SD-01 Preconstruction Submittals

Preconstruction Survey; G

Prior to commencement of work the Contractor shall perform a preconstruction survey of the project site with the Contracting Officer and take photographs showing existing environmental conditions in and adjacent to the site. A brief report of the results of this survey shall be prepared by the contractor and copies furnished to the Contracting Officer. The contractor shall certify that he has read and understands regulations 29 CFR 1910.94-SUBPART G, 40 CFR 261, 40 CFR 262, 40 CFR 263, 40 CFR 264, 49 CFR 178, EP-1165-2-304, ER-1165-2-26, 9VAC25-31, 9VAC25-180, and VESCH provide proof that he has performed work in accordance with these regulations.

Environmental Protection Plan; G

The Contractor shall submit for approval within 10 days after Notice to Proceed, and prior to any work on the site, his written Environmental Protection Plan.The Contractor shall meet with the Contracting Officer, to discuss the proposed Environmental Protection Plan and to develop mutual understanding relative to the details of environmental protection, including measures for protecting natural resources, required reports, and other measures to be taken.
The plan shall demonstrate compliance with 29 CFR 1910.94-SUBPART G, 40 CFR 261, 40 CFR 262, 40 CFR 263, 40 CFR 264, 49 CFR 178, EM 385-1-1, EP-1165-2-304, ER-1165-2-26, VR 680-14-19, and VESCH.

Erosion Control Plan; G

The contractor shall, within 10 days after the Notice to Proceed, submit an Erosion Control Plan in accordance with VESCH and as otherwise specified for approval of the Contracting Officer, showing the Contractor's scheme for controlling erosion and disposing of wastes. The Erosion Control Plan shall include as a minimum the following items indicating adequate measures to:

a. Reduce by the greatest extent practicable the area and duration of exposure of readily erodible soils.

b. Protect the soils by use of temporary vegetation, or seeding and mulch, or by accelerating the establishment of permanent vegetation. Complete and protect segments of work as rapidly as is consistent with construction schedules.

c. Retard the rate of runoff from the construction site and control disposal of runoff.

d. Sprinkle or apply dust suppressors, or otherwise keep dust within tolerable limits on haul roads and at the site.

e. Borrow areas furnished by the contractor shall be at a location where pollution from the operation can be minimized. Locations should be avoided where pollution would be inevitable.

f. Provide temporary measures for the control of erosion in the event construction operations are suspended for any appreciable length of time.

g. Provide protection against discharge of pollutants such as chemicals, fuel, lubricants, or sewage into any stream.

h. Locate sanitary facilities away from streams, wells, or springs.

****
*****Hazardous Waste Disposal Permit
Submit copies of state and local permit or license showing such agencies' approval of the disposal plan.

9VAC25-180; FIO
The Contractor shall provide a copy of his application for the 9VAC25-180 Permit at least five days prior to submittal to appropriate office of the Commonwealth of Virginia. The Contractor shall obtain the 9VAC25-180 in accordance with Virginia Pollutant Discharge Elimination System (VPDES) General Permit For Storm Water Discharges From Construction Sites and provide a copy to the Contracting Officer prior to any work on the site.

1.4 GENERAL REQUIREMENTS

1.4.1 General

The work covered by this section consists of furnishing all labor, materials and equipment and performing all work required for the prevention of environmental pollution during and as the result of construction operations under this contract. In the event the measures set forth in other Technical Provisions of these specifications

and this Section conflict, the most stringent standard shall apply. The control of environmental pollution requires consideration of air, water, and land.

1.4.2 Provisions

Provide and maintain, during the life of the contract, environmental protection. Plan for and provide environmental protective measures to control pollution that develops during normal construction practice. Plan for and provide environmental protective measures required to correct conditions that develop during the construction of permanent or temporary environmental features associated with the project.

1.4.3 Compliance

The contractor shall comply with Federal, state, and local regulations pertaining to the environmental pollution control and abatement, including but not limited to water, air, land, and noise pollution. All applicable provisions of the Corps of Engineers Manual, EM 385-1-1, entitled "Safety and Health Requirements Manual" in effect on the date of solicitation, as well as the specific requirements stated elsewhere in the contract specifications shall be strictly observed and enforced.

PART 2 PRODUCTS (NOT APPLICABLE)

PART 3 EXECUTION

3.1 NOTIFICATION

The Contracting Officer will notify the contractor in writing of any non-compliance with the foregoing provisions and the action to be taken. The contractor shall, after receipt of such notice, immediately take corrective action. Such notice, when delivered to the contractor or his authorized representative at the site of the work, shall be deemed sufficient for the purpose. If the contractor fails or refuses to comply promptly, the Contracting Officer may issue an order stopping all or part of the work until satisfactory corrective action has been taken. No part of the time lost due to any such stop orders shall be made the subject of a claim for extension of time or for excess costs or damages by the contractor unless it was later determined that the contractor was in compliance.

3.2 SUBCONTRACTORS

Compliance with the provisions of this section by subcontractors will be the responsibility of the contractor.

3.3 PROTECTION OF WATER RESOURCES

The contractor shall not pollute streams, lakes or reservoirs with fuels, oils, bitumens, calcium chloride, acid construction wastes or other harmful materials. It is the responsibility of the contractor to investigate and comply with all applicable Federal, State, County and

Municipal laws concerning pollution of rivers and streams. All work under this contract shall be performed in such a manner that objectionable conditions will not be created in streams through or adjacent to the project areas.

3.4 INDUSTRIAL POLLUTION HAZARDS

Hazardous substances as defined in 40 CFR 261 or as defined by applicable state and local regulations, and dust which poses air pollution hazards shall be controlled as approved to comply with all applicable laws which govern the work.

3.4.1 DUST CONTROL

The contractor shall maintain all work areas free from dust which would contribute to air pollution. Approved temporary methods of stabilization consisting of sprinkling, chemical treatment, light bituminous treatment or similar methods will be permitted to control dust. Sprinkling, to be approved, must be repeated at such intervals as to keep all parts of the disturbed area at least damp at all times, and the contractor must have sufficient competent equipment on the job to accomplish this if sprinkling is used. Dust control shall be performed as the work proceeds and whenever a dust nuisance or hazard occurs.

3.5 MAINTENANCE OF POLLUTION CONTROL FACILITIES DURING CONSTRUCTION

During the life of this contract the contractor shall maintain all facilities constructed for pollution control under this contract as long as the operations creating the particular pollutant are being carried out or until the material concerned has become stabilized to the extent that pollution is no longer being created.

3.6 MAINTENANCE OF PERMITS

The Contractor shall immediately provide to the Contracting Officer two copies of any modification, revocation or reissuance of any applicable permit required to complete the work. The Contractor shall provide two copies of all correspondence with Federal, State or Local Government offices regarding any applicable permit within 5 days. The Contractor shall notify the Contracting Officer in writing at least 5 days prior to any visit to the site by any Federal, State or Local Government office, other than those scheduled by the Contracting Officer, scheduled to observe compliance with applicable permits provided the Contractor receives at least 5 days notice. Otherwise the Contractor shall immediately provide the Contracting Officer written notice of the date, time, office(s) participating and features to be observed by the most expeditious means available.

-- End of Section --

SECTION 02231

CLEARING AND GRUBBING
09/03

PART 1 GENERAL

1.1 SUBMITTALS

Government approval is required for submittals with a "G" designation; submittals not having a "G" designation are for information only or as otherwise designated. When used, a designation following the "G" designation identifies the office that will review the submittal for the Government. The following shall be submitted in accordance with Section 01330 SUBMITTAL PROCEDURES:

SD-03 Product Data

Nonsaleable Materials; G,

Written permission to dispose of such products on private property shall be filed with the Contracting Officer.

SD-04 Samples

Tree wound paint

Herbicide

Submit samples in cans with manufacturer's label.

1.2 DELIVERY, STORAGE, AND HANDLING

Deliver materials to, store at the site, and handle in a manner which will maintain the materials in their original manufactured or fabricated condition until ready for use.

PART 2 PRODUCTS

2.1 TREE WOUND PAINT

Bituminous based paint of standard manufacture specially formulated for tree wounds.

2.2 HERBICIDE

Comply with Federal Insecticide, Fungicide, and Rodenticide Act (Title 7 U.S.C. Section 136) for requirements on contractor's licensing, certification and record keeping. Contact the command Pest Control Coordinator prior to starting work.

PART 3 EXECUTION

3.1 PROTECTION

3.1.1 Roads and Walks

Keep roads and walks free of dirt and debris at all times.

3.1.2 Trees, Shrubs, and Existing Facilities

Trees and vegetation to be left standing shall be protected from damage incident to clearing, grubbing, and construction operations by the erection of barriers or by such other means as the circumstances require.

3.1.3 Utility Lines

Protect existing utility lines that are indicated to remain from damage. Notify the Contracting Officer immediately of damage to or an encounter with an unknown existing utility line. The Contractor shall be responsible for the repairs of damage to existing utility lines that are indicated or made known to the Contractor prior to start of clearing and grubbing operations. When utility lines which are to be removed are encountered within the area of operations, the Contractor shall notify the Contracting Officer in ample time to minimize interruption of the service.

3.2 CLEARING

Clearing shall consist of the felling, trimming, and cutting of trees into sections and the satisfactory disposal of the trees and other vegetation designated for removal, including downed timber, snags, brush, and rubbish occurring within the areas to be cleared. Clearing shall also include the removal and disposal of structures that obtrude, encroach upon, or otherwise obstruct the work. Trees, stumps, roots, brush, and other vegetation in areas to be cleared shall be cut off flush with or below the original ground surface, except such trees and vegetation as may be indicated or directed to be left standing. Trees designated to be left standing within the cleared areas shall be trimmed of dead branches 40 mm 1-1/2 inches or more in diameter and shall be trimmed of all branches the heights indicated or directed. Limbs and branches to be trimmed shall be neatly cut close to the bole of the tree or main branches. Cuts more than 40 mm 1-1/2 inches in diameter shall be painted with an approved tree-wound paint. Apply herbicide in accordance with the manufacturer's label to the top surface of stumps designated not to be removed.

3.3 TREE REMOVAL

Where indicated or directed, trees and stumps that are designated as trees shall be removed from areas outside those areas designated for clearing and grubbing. This work shall include the felling of such trees and the removal of their stumps and roots as specified in paragraph GRUBBING. Trees shall be disposed of as specified in paragraph DISPOSAL OF MATERIALS.

3.4 PRUNING

Prune trees designated to be left standing within the cleared areas of dead branches 38 mm 1 1/2 inches or more in diameter; and trim branches to heights and in a manner as indicated. Neatly cut limbs and branches to be trimmed close to the bole of the tree or main branches. Paint cuts more than 32 mm 1 1/4 inches in diameter with an approved tree wound paint.

3.5 GRUBBING

Grubbing shall consist of the removal and disposal of stumps, roots larger than 75 mm 3 inches in diameter, and matted roots from the designated grubbing areas. Material to be grubbed, together with logs and other organic or metallic debris not suitable for foundation purposes, shall be removed to a depth of not less than 455 mm 18 inches below the original surface level of the ground in areas indicated to be grubbed and in areas indicated as construction areas under this contract, such as areas for buildings, and areas to be paved. Depressions made by grubbing shall be filled with suitable material and compacted to make the surface conform with the original adjacent surface of the ground.

3.6 DISPOSAL OF MATERIALS

3.6.1 Saleable Timber

All timber on the project site noted for clearing and grubbing shall become the property of the Contractor, and shall be removed from the project site and disposed of off stations.

3.6.2 Nonsaleable Materials

Logs, stumps, roots, brush, rotten wood, and other refuse from the clearing and grubbing operations, except for salable timber, shall be disposed of outside the limits of Government-controlled land as the Contractor's responsibility.

-- End of Section --

SECTION 02300A

EARTHWORK
NAO ModMaster 10/2003

PART 1 GENERAL

1.1 REFERENCES

The publications listed below form a part of this specification to the extent referenced. The publications are referred to in the text by basic designation only.

AMERICAN ASSOCIATION OF STATE HIGHWAY AND TRANSPORTATION OFFICIALS (AASHTO)

AASHTO T 180	(1997) Moisture-Density Relations of Soils Using a 4.54-kg (10-lb) Rammer and an 457 mm (18-in) Drop
AASHTO T 224	(1996) Correction for Coarse Particles in the Soil Compaction Test

AMERICAN SOCIETY FOR TESTING AND MATERIALS (ASTM)

ASTM C 136	(1996a) Sieve Analysis of Fine and Coarse Aggregates
ASTM D 422	(1963; R 1998) Particle-Size Analysis of Soils
ASTM D 1140	(1997) Amount of Material in Soils Finer than the No. 200 (75-micrometer) Sieve
ASTM D 1556	(2000) Density and Unit Weight of Soil in Place by the Sand-Cone Method
ASTM D 1557	(2000) Laboratory Compaction Characteristics of Soil Using Modified Effort (56,000 ft-lbf/cu. ft. (2,700 kN-m/cu.m.))
ASTM D 2167	(1994; R 2001) Density and Unit Weight of Soil in Place by the Rubber Balloon Method
ASTM D 2487	(1998) Classification of Soils for Engineering Purposes (Unified Soil Classification System)
ASTM D 2922	(1996el) Density of Soil and Soil-Aggregate in Place by Nuclear Methods (Shallow Depth)

ASTM D 2937	(1994) Density of Soil in Place by the Drive-Cylinder Method
ASTM D 3017	(1988; R 1996el) Water Content of Soil and Rock in Place by Nuclear Methods (Shallow Depth)
ASTM D 4318	(2000) Liquid Limit, Plastic Limit, and Plasticity Index of Soils

1.4 DEFINITIONS

Testing required for classifying materials shall be in accordance with ASTM D 4318, ASTM C 136, ASTM D 422, and ASTM D 1140.

1.4.1 Satisfactory Materials

Satisfactory materials for fill shall comprise any materials classified by ASTM D 2487 as GW, GP, GM, GC, SW, SP, and SM. The above listed materials are satisfactory in-situ.

1.4.2 Unsatisfactory Materials

Materials classified by ASTM D 2487 as OL, OH, and Pt are unsatisfactory in-situ. These materials plus those which do not comply with the requirements for satisfactory materials are unsatisfactory as fill. Unsatisfactory materials also include those materials containing roots and other organic matter, trash, debris, frozen materials, and stones larger than 3 inches in any dimension.

1.4.3 Cohesionless and Cohesive Materials

Cohesionless materials include materials classified in ASTM D 2487 as GW, GP, SW, and SP. Cohesive materials include materials classified as GC, SC, ML, CL, MH, and CH. Materials classified as GM and SM will be identified as cohesionless only when the fines are nonplastic.

1.4.4 Degree of Compaction

Degree of compaction required, except as noted in the third sentence, is expressed as a percentage of the maximum density obtained by the test procedure presented in ASTM D 1557. This will be abbreviated below as a percent of laboratory maximum density. Since ASTM D 1557 applies only to soils that have 30 percent or less by weight of their particles retained on the 9.0 mm 3/4 inch sieve, the degree of compaction for material having more than 30 percent by weight of their particles retained on the 9.0 mm 3/4 inch sieve shall be expressed as a percentage of the maximum density in accordance with AASHTO T 180 Method D and corrected with AASHTO T 224. To maintain the same percentage of coarse material, the "remove and replace" procedure as described in the NOTE 8 in Paragraph 7.2 of AASHTO T 180 shall be used.

1.5 SUBMITTALS

Government approval is required for submittals with a "G" designation; submittals not having a "G" designation are for information only. When used, a designation following the "G" designation identifies the office

that will review the submittal for the Government. The following shall be submitted in accordance with Section 01330 SUBMITTAL PROCEDURES:

SD-06 Test Reports

Materials and Compaction Testing; G, RE.
Tolerance Tests for Subgrades.

Copies of all laboratory and field test reports, including calibration curves and results of calibration tests, shall be submitted to the Contracting Officer within 72 hours of the completion of the test. Required soils tests for fill, backfill, and subgrade materials shall be submitted prior to beginning backfill embankment, and in advance of subgrade preparation operations.

SD-07 Certificates

Testing; G, RE.

Qualifications of the commercial testing laboratory or Contractor's testing facilities.

1.6 SUBSURFACE DATA

Preliminary subsurface soil boring logs and a summary of applicable testing results are included in this project manual (See Attachment 5). The soil boring and test result data are believed to show the nature of the materials encountered at those specific locations and depths; conditions vary between and below explorations. These data shall be carefully studied by the Contractor, but shall not be implied as fully descriptive and complete. The Contractor shall obtain whatever additional data they deem necessary to properly bid and construct the project in accordance with the drawings and specifications.

1.7 CLASSIFICATION OF EXCAVATION

No consideration will be given to the nature of the materials, and all excavation will be designated as unclassified excavation.

1.7.1 Rock Excavation

Rock excavation shall include blasting, excavating, grading, and disposing of material classified as rock and shall include the satisfactory removal and disposal of boulders 1/2 cubicmeter yard or more in volume; solid rock; rock material that is in ledges, bedded deposits, and unstratified masses, which cannot be removed without systematic drilling and blasting; and firmly cemented conglomerate deposits possessing the characteristics of solid rock impossible to remove without systematic drilling and blasting. The removal of any concrete or masonry structures, except pavements, exceeding 1/2 cubicmeteryard in volume that may be encountered in the work shall be included in this classification. If at any time during excavation, including excavation from borrow areas, the Contractor encounters material that may be classified as rock excavation, such material shall be uncovered and the Contracting Officer notified by the Contractor. The Contractor shall not proceed with the excavation of this material until the Contracting Officer has classified the materials as

common excavation or rock excavation and has taken cross sections as required. Failure on the part of the Contractor to uncover such material, notify the Contracting Officer, and allow ample time for classification and cross sectioning of the undisturbed surface of such material will cause the forfeiture of the Contractor's right of claim to any classification or volume of material to be paid for other than that allowed by the Contracting Officer for the areas of work in which such deposits occur.

1.7.2 Common Excavation

Common excavation shall include the satisfactory removal and disposal of all materials not classified as rock excavation.

1.8 BLASTING

If blasting becomes necessary, the Contractor shall submit a Blasting Plan and obtain written approval prior to performing any blasting. The plan shall contain provisions for storing, handling and transporting explosives as well as for the blasting operations. The Contractor shall be responsible for damage caused by blasting operations.

1.9 UTILIZATION OF EXCAVATED MATERIALS

All unsatisfactory materials removed from excavations shall be disposed of off Government property. Satisfactory material removed from excavations shall be used, insofar as practicable, in the construction of fills, embankments, subgrades, shoulders, bedding (as backfill), and for similar purposes. No satisfactory excavated material shall be wasted without specific written authorization. Unsatisfactory material and surplus satisfactory material to be wasted shall be disposed of off Government property. Coarse rock from excavations shall be stockpiled and used for constructing slopes or embankments adjacent to streams, or sides and bottoms of channels, and for protecting against erosion. No excavated material shall be disposed of in such a manner as to obstruct the flow of any stream, endanger a partly finished structure, impair the efficiency or appearance of any structure, or be detrimental to the completed work in any way.

PART 2 PRODUCTS (Not Applicable)

PART 3 EXECUTION

3.1 STRIPPING OF TOPSOIL

Where indicated or directed, or as necessary to perform the required work, material determined by the Contractor to be suitable for topsoil shall be stripped to full depth. Topsoil shall be spread on areas already graded and prepared for topsoil in accordance with paragraph PLACING TOPSOIL, or transported and deposited in stockpiles convenient to areas that are to receive application of the topsoil later, or at locations indicated or specified. Topsoil shall be kept separate from other excavated materials, brush, litter, objectionable weeds, roots, stones larger than50 mm 2 inches in diameter, and other materials that would interfere with planting and maintenance operations. Any surplus of topsoil from excavations and grading shall be stockpiled in locations indicated.

3.2 DRAINAGE AND DEWATERING

3.1.1 Drainage

Surface water shall be directed away from excavation and construction sites so as to prevent erosion and undermining of foundations. Diversion ditches, dikes, and grading shall be provided and maintained as necessary during construction. Excavated slopes and backfill surfaces shall be protected to prevent erosion and sloughing. Excavation shall be performed so that the site and the area immediately surrounding the site and affecting operations at the site shall be continually and effectively drained.

3.2.2 Dewatering

Groundwater flowing toward or into excavations shall be controlled to prevent sloughing of excavation slopes and walls, boils, uplift and heave in the excavation and to eliminate interference with orderly progress of construction. French drains, sumps, ditches or trenches will not be permitted within 3 feet of the foundation of any structure, except with specific written approval, and after specific contractual provisions for restoration of the foundation area have been made. Control measures shall be taken by the time the excavation reaches the water level in order to maintain the integrity of the in situ material. While the excavation is open, the water level shall be maintained continuously at least 1 foot below the working level or deeper as required to continue construction.

3.3 GENERAL EXCAVATION

The Contractor shall perform excavation of every type of material encountered within the limits of the project to the lines, grades, and elevations indicated and as specified. Grading shall be in conformity with the typical sections shown and the tolerances specified in paragraph FINISHING. Satisfactory excavated materials shall be transported to and placed in fill or embankment within the limits of the work. Unsatisfactory materials encountered below the required grading limits shall be excavated and replaced with satisfactory materials as directed. Rock encountered within the limits of work shall be excavated. When removal of unsatisfactory material is caused by the action or inaction of the Contractor in his performance of the work, the resulting material shall be excavated and replaced with satisfactory material by the Contractor at no additional cost to the Government. Surplus satisfactory excavated material not required for fill or embankment and all unsatisfactory material shall be disposed of off Government property. During construction, excavation and fill shall be performed in a manner and sequence that will provide proper drainage at all times. Material required for fill or embankment in excess of that produced by excavation within the grading limits shall be excavated from the borrow areas indicated or from other approved areas selected by the Contractor as specified.

3.3.1 Ditches, Gutters, and Swales

Excavation of ditches, gutters, and swales shall be accomplished by cutting accurately to the cross sections, grades, and elevations shown. Care shall be taken not to excavate ditches and swales below grades shown. Excessive open ditch or swales excavation shall be backfilled with satisfactory, thoroughly compacted, material or with suitable stone or cobble to grades shown. Material excavated shall be disposed of as shown or as directed, except that in no case shall material be deposited less than1 meter 4 feet from the edge of a ditch. The Contractor shall maintain excavations free

from detrimental quantities of leaves, brush, sticks, trash, and other debris until final acceptance of the work.

3.3.2 Drainage Structures

Excavations shall be made to the lines, grades, and elevations shown, or as directed. Trenches and foundation pits shall be of sufficient size to permit the placement and removal of forms for the full length and width of structure footings and foundations as shown. Rock or other hard foundation material shall be cleaned of loose debris and cut to a firm, level, stepped, or serrated surface. Loose disintegrated rock and thin strata shall be removed. When concrete or masonry is to be placed in an excavated area, the bottom of the excavation shall not be disturbed. Excavation to the final grade level shall not be made until just before the concrete or masonry is to be placed.

3.4 BORROW MATERIAL

Borrow material shall be selected to meet the requirements and conditions of the particular fill for which it is to be used. Borrow materials shall be subject to approval. Necessary clearing, grubbing, disposal of debris, and satisfactory drainage of borrow pits shall be performed by the Contractor as incidental operations to the borrow excavation.

3.4.1 Selection

Borrow materials shall be obtained from sources outside the limits of Government-controlled land or approved sources within the limits of Government-controlled land. Borrow material from approved sources on Government-controlled land may be obtained without payment of royalties. Unless specifically provided, no borrow shall be obtained from within the limits of the project site without prior written approval. The source of borrow material shall be the contractor's responsibility. Unless otherwise provided in the contract, the contractor shall obtain from the owners the right to procure material, shall pay all royalties and other charges involved, and shall bear all the expense of developing the sources, including rights-of-way for hauling.

3.6 BACKFILL

Backfill adjacent to any and all types of structures shall be placed and compacted to at least 90 percent laboratory maximum density for cohesive materials or 95 percent laboratory maximum density for cohesionless materials, in such a manner as to prevent wedging action or eccentric loading upon or against the structure. Material shall be moistened or aerated as necessary to provide the moisture content that will readily facilitate obtaining the specified compaction with the equipment used. Ground surface on which backfill is to be placed shall be prepared as specified in paragraph PREPARATION OF GROUND SURFACE FOR EMBANKMENTS. Compaction requirements for backfill materials shall also conform to the applicable portions of paragraphs PREPARATION OF GROUND SURFACE FOR EMBANKMENTS, EMBANKMENTS, and SUBGRADE PREPARATION, and Section 02630 STORM-DRAINAGE SYSTEM; and Section 02316A EXCAVATION, TRENCHING, AND BACKFILLING FOR UTILITIES SYSTEMS. Compaction shall be accomplished using equipment well suited to the material being compacted, and able to achieve the specified density.

3.7 PREPARATION OF GROUND SURFACE FOR EMBANKMENTS

3.7.1 General Requirements

Ground surface on which fill is to be placed shall be stripped of live, dead, or decayed vegetation, rubbish, debris, and other unsatisfactory material. The stripped surface shall be pulverized; moistened or aerated as necessary; thoroughly mixed; and compacted to at least 90 percent laboratory maximum density for cohesive materials or 95 percent laboratory maximum density for cohesionless materials. Compaction shall be accomplished using equipment well suited to the material being compacted. The prepared ground surface shall be scarified and moistened or aerated as required just prior to placement of embankment materials to assure adequate bond between embankment material and the prepared ground surface.

3.7.2 Frozen Material

Embankment shall not be placed on a foundation which contains frozen material, or which has been subjected to freeze-thaw action. This prohibition encompasses all foundation types, including the natural ground, all prepared subgrades (whether in an excavation or on an embankment) and all layers of previously placed and compacted earth fill which become the foundations for successive layers of earth fill. All material that freezes or has been subjected to freeze-thaw action during the construction work, or during periods of temporary shutdowns, such as, but not limited to, nights, holidays, weekends, winter shutdowns, or earthwork operations, shall be removed to a depth that is acceptable to the Contracting Officer and replaced with new material. Alternatively, the material will be thawed, dried, reworked, and recompacted to the specified criteria before additional material is placed. The Contracting Officer will determine when placement of fill shall cease due to cold weather. The Contracting Officer may elect to use average daily air temperatures, and/or physical observation of the soils for his determination. Embankment material shall not contain frozen clumps of soil, snow, or ice.

3.8 EMBANKMENTS

3.8.1 Earth Embankments

Earth embankments shall be constructed from satisfactory materials free of organic or frozen material and rocks with any dimension greater than75 mm. 3 inches. The material shall be placed in successive horizontal layers of loose material not more than 12 inches in depth. Each layer shall be spread uniformly on a soil surface that has been moistened or aerated as necessary, and scarified or otherwise broken up so that the fill will bond with the surface on which it is placed. After spreading, each layer shall be plowed, disked, or otherwise broken up; moistened or aerated as necessary; thoroughly mixed; and compacted to at least 90 percent laboratory maximum density for cohesive materials or 95 percent laboratory maximum density for cohesionless materials. Compaction requirements for the upper portion of earth embankments forming subgrade for pavements shall be identical with those requirements specified in paragraph SUBGRADE PREPARATION. Compaction shall be accomplished using equipment well suited to the material being compacted, and able to achieve the specified density.

3.9 SUBGRADE PREPARATION

3.9.1 Construction

Subgrade shall be shaped to line, grade, and cross section, and compacted

as specified. This operation shall include plowing, disking, and any moistening or aerating required to obtain specified compaction. Soft or otherwise unsatisfactory material shall be removed and replaced with satisfactory excavated material or other approved material as directed. Rock encountered in the cut section shall be excavated to a depth of150 mm 6 inches below finished grade for the subgrade. Low areas resulting from removal of unsatisfactory material or excavation of rock shall be brought up to required grade with satisfactory materials, and the entire subgrade shall be shaped to line, grade, and cross section and compacted as specified. After rolling, the surface of the subgrade for roadways shall not show deviations greater than 1/2millimeter inch when tested with a 10-meterfoot straightedge applied both parallel and at right angles to the centerline of the area. The elevation of the finish subgrade shall not vary more than15 mm 0.05 foot from the established grade and cross section.

3.9.2 Compaction

Compaction shall be accomplished by sheepsfoot rollers, pneumatic-tired rollers, steel-wheeled rollers, vibratory compactors, or other approved equipment well suited to the material being compacted. Except for paved areas and railroads, each layer of the embankment shall be compacted as specified for Earth Embankments.

3.9.2.2 Subgrade for Pavements

Subgrade for pavements shall be compacted to at least 95 percent of laboratory maximum density for the depth of 6 inches below the overlying base materials.

3.9.2.3 Subgrade for Shoulders

Subgrade for shoulders shall be compacted to at least 95 percent of laboratory maximum density for the depth of 6 inches below the indicated shoulder material.

3.10 SHOULDER CONSTRUCTION

Shoulders shall be constructed of satisfactory excavated or borrow material or as otherwise shown or specified. Shoulders shall be constructed as soon as possible after adjacent paving is complete, but in the case of rigid pavements, shoulders shall not be constructed until permission of the Contracting Officer has been obtained. The entire shoulder area shall be compacted to at least the percentage of maximum density as specified in paragraph SUBGRADE PREPARATION above, for specific ranges of depth below the surface of the shoulder. Compaction shall be accomplished by sheepsfoot rollers, pneumatic-tired rollers, steel-wheeled rollers, vibratory compactors, or other approved equipment. Shoulder construction shall be done in proper sequence in such a manner that adjacent ditches will be drained effectively and that no damage of any kind is done to the adjacent completed pavement. The completed shoulders shall be true to alignment and grade and shaped to drain in conformity with the cross section shown.

3.11 FINISHING

The surface of excavations, embankments, and subgrades shall be finished to a smooth and compact surface in accordance with the lines, grades, and cross sections or elevations shown. The degree of finish for graded areas

shall be within30 mm 0.1 foot of the grades and elevations indicated except that the degree of finish for subgrades shall be specified in paragraph SUBGRADE PREPARATION. Gutters, ditches, and swales shall be finished in a manner that will result in effective drainage. The surface of areas to be turfed shall be finished to a smoothness suitable for the application of turfing materials.

3.12 PLACING TOPSOIL

Topsoil shall be placed in accordance with the requirements in Section 02315 A EXCAVATION, FILLING AND BACKFILLING FOR BUILDINGS.

3.13 TESTING

Testing shall be performed by an approved commercial testing laboratory or by the Contractor subject to approval. If the Contractor elects to establish testing facilities, no work requiring testing will be permitted until the Contractor's facilities have been inspected and approved by the Contracting Officer. Laboratory tests for moisture-density relations complete with zero air voids curve, gradation, and Atterberg limits shall be made in accordance with the procedures referenced in ASTM D 1557, ASTM D 422, and ASTM D 4318. Field in-place density shall be determined in accordance with ASTM D 1556 or ASTM D 2167. In addition to Contracting reporting of test results required by paragraph SUBMITTALS, the testing laboratory shall furnish directly to the Resident Contracting Officer, an information copy of each in-place density test and related moisture and calibration results. Construction of each subsequent lift or other overlying materials shall not proceed until test results are approved. When test results indicate, as determined by the Contracting Officer, that compaction is not as specified, the material shall be removed, replaced and recompacted to meet specification requirements. Tests on recompacted areas shall be performed to determine conformance with specification requirements. Inspections and test results shall be certified by a registered professional civil engineer. These certifications shall state that the tests and observations were performed by or under the direct supervision of the engineer and that the results are representative of the materials or conditions being certified by the tests.

3.13.1 Materials and Compaction Testing

The following tests are required:

a. A minimum of one moisture-density relations testing as specified above shall be performed for each source or classification of fill material, backfill material, and existing subgrade material.

b. One Atterberg limits test and one gradation analysis is required for every six field density tests.

c. A minimum of one sand cone density test is required for every six nuclear gauge field density tests or fraction thereof. Worksheets of sand density and sand cone calibration shall be submitted to the Contracting Officer prior to commencing work and each time a new supply of sand is used.

d. In the stockpile, excavation, or borrow areas, a minimum of two moisture content tests per day per type of material or source of material being placed during stable weather conditions shall be

performed. During unstable weather, tests shall be made as dictated by local conditions and approved by the Contracting Officer. A quart jar sample of each moisture-density test material shall be delivered to the Contracting Officer at the time the test is obtained.

e. A pint jar sample of each sixth field-density test (coincident with a sand cone density test) material shall be delivered to the Contracting Officer at the time the test is obtained.

f. Field density tests shall be performed as follows: a minimum of one test per lift per 400 square yards or fraction thereof is required for fill and backfill material and a minimum of one test per 600 square yards or fraction thereof is required for recompacted subgrades prior to filling. Locations of all tests shall be at the direction of the Contracting Officer.

3.13.2 Tolerance Tests for Subgrades

Continuous checks on the degree of finish specified in paragraph SUBGRADE PREPARATION shall be made during construction of the subgrades.

3.14 SUBGRADE AND EMBANKMENT PROTECTION

During construction, embankments and excavations shall be kept shaped and drained. Ditches and drains along subgrade shall be maintained to drain effectively at all times. The finished subgrade shall not be disturbed by traffic or other operation and shall be protected and maintained by the Contractor in a satisfactory condition until base or pavement is placed. The storage or stockpiling of materials on the finished subgrade will not be permitted. No base course or pavement shall be laid until the subgrade has been checked and approved, and in no case shall base or pavement be placed on a muddy, spongy, or frozen subgrade.

-- End of Section --

SECTION 02315A

EXCAVATION, FILLING AND BACKFILLING FOR BUILDINGS
NAO ModMaster 10/2003

PART 1 GENERAL

1.1 REFERENCES

The publications listed below form a part of this specification to the extent referenced. The publications are referred to in the text by basic designation only.

AMERICAN SOCIETY FOR TESTING AND MATERIALS (ASTM)

ASTM D 422	(1963; R 1998) Particle-Size Analysis of Soils
ASTM D 1556	(2000) Density and Unit Weight of Soil in Place by the Sand-Cone Method
ASTM D 1557	(2000) Laboratory Compaction Characteristics of Soil Using Modified Effort (56,000 ft-lbf/cu. ft. (2,700 kN-m/cu.m.))
ASTM D 2167	(1994) Density and Unit Weight of Soil in Place by the Rubber Balloon Method
ASTM D 2216	(1998) Laboratory Determination of Water (Moisture) Content of Soil and Rock
ASTM D 2487	(1998) Classification of Soils for Engineering Purposes (Unified Soil Classification System)
ASTM D 2922	(1996el) Density of Soil and Soil-Aggregate in Place by Nuclear Methods (Shallow Depth)
ASTM D 2937	(1994) Density of Soil in Place by the Drive-Cylinder Method
ASTM D 3017	(1988; R 1996el) Water Content of Soil and Rock In Place by Nuclear Methods (Shallow Depth)
ASTM D 4318	(2000) Liquid Limit, Plastic Limit, and Plasticity Index of Soils

VIRGINIA DEPARTMENT OF TRANSPORTATION (VDOT)

VDOT SPECS	(January 1994) Road and Bridge Specifications

1.2 DEFINITIONS

1.2.1 Satisfactory Materials

Materials classified by ASTM D 2487 as GW, GP, GM, SW, SP, SM, and SC with less than 20 percent passing the No. 200 sieve, are satisfactory as fill beneath structures and sidewalks. The above listed materials plus GC, CL, ML, CH, and MH are satisfactory in-situ and as fill in general grading areas not controlled by requirements in other specification sections.

1.2.2 Unsatisfactory Materials

Materials classified by ASTM D 2487 as OL, OH and Pt are unsatisfactory in-situ or as fill. Unsatisfactory materials also include those materials containing roots and other organic matter, trash, debris, frozen materials, stones larger than 3 inches in any dimension, and material which cannot support equipment or be properly compacted due to excess moisture.

1.2.3 Cohesionless and Cohesive Materials

Cohesionless materials include materials classified in ASTM D 2487 as GW, GP, SW, and SP. Cohesive materials include materials classified as GC, SC, ML, CL, MH, and CH. Materials classified as GM and SM will be identified as cohesionless only when the fines are nonplastic.

1.2.4 Degree of Compaction

Degree of compaction required is expressed as a percentage of the maximum density obtained by the appropriate test procedure presented in ASTM D 1557, abbreviated hereinafter as percent laboratory maximum density.

1.3 SUBMITTALS

Government approval is required for submittals with a "G" designation; submittals not having a "G" designation are for information only. When used, a designation following the "G" designation identifies the office that will review the submittal for the Government. The following shall be submitted in accordance with Section 01330 SUBMITTAL PROCEDURES:

SD-03 Product Data

Blasting

Blasting plan when blasting is permitted.

SD-07 Certificates

Testing; G, RE

Qualifications of the commercial testing laboratory or Contractor's testing facilities.

1.4 SUBSURFACE DATA

Subsurface soil boring logs and a summary of applicable testing results are included in Attachment 5. The soil boring and test result data are

believed to show the nature of the materials encountered at those specific locations and depths; conditions vary between and below explorations. These data shall be carefully studied by the Contractor, but shall not be implied as fully descriptive and complete. The Contractor shall obtain whatever additional data they deem necessary to properly bid and construct the project in accordance with the drawings and specifications. Proper drainage is required for all excavations and earthwork; dewatering shall be expected for all excavations and utility trenching during and after rainy periods. Unstable soil conditions, resulting in delay to construction activity, shall also be expected for earthwork performed during and after rainy periods.

PART 2 PRODUCTS

2.1 MATERIALS

2.1.5 Nonfrost Susceptible (NFS) Material

Nonfrost susceptible material shall be a uniformly graded washed sand.

2.1 CAPILLARY WATER BARRIER

2.1.1 Consistency

Capillary Water Barrier shall consist of clean, crushed, nonporous rock, crushed gravel, or uncrushed gravel. The maximum particle size shall be 1-1/2 inches and no more than 3 percent by weight shall pass the No. 8 size sieve.

PART 3 EXECUTION

3.1 CLEARING AND GRUBBING

The areas within lines1.5 m 5 feet outside of each building and structure line shall be cleared and grubbed of trees, stumps, roots, brush and other vegetation, debris, existing foundations, pavements, utility lines, structures, fences, and other items that would interfere with construction operations. Stumps, logs, roots, and other organic matter shall be completely removed and the resulting depressions shall be filled with satisfactory material, placed and compacted in accordance with paragraph FILLING AND BACKFILLING. Materials removed shall be disposed of outside the limits of Government-controlled property at the Contractor's responsibility.

3.2 TOPSOIL

Where indicated or directed, or as necessary to perform the required work, material determined by the Contractor to be suitable for topsoil shall be stripped to full depth. Topsoil shall be spread on areas already graded and prepared for topsoil, or transported and deposited in stockpiles convenient to areas that are to receive application of the topsoil later, or at locations indicated or specified. Topsoil shall be kept separate from other excavated materials, brush, litter, objectionable weeds, roots, stones larger than50 mm 2 inches in diameter, and other materials that would interfere with planting and maintenance operations. Any excess topsoil shall be disposed as specified for excess excavated material.

3.3 EXCAVATION

Excavation shall conform to the dimensions and elevations indicated for each building, structure, and footing except as specified, and shall include trenching for utility and foundation drainage systems to a point1.5 m 5 feet beyond the building line of each building and structure, excavation forunderground fuel tanks, and all work incidental thereof. Excavation shall extend a sufficient distance from walls and footings to allow for placing and removal of forms. Excavations below indicated depths will not be permitted except to remove unsatisfactory material. Unsatisfactory material encountered below the grades shown shall be removed and replaced with satisfactory material as directed; payment therefor will be made in conformance with the CHANGES clause of the CONTRACT CLAUSES. When removal of unsatisfactory material is caused by the action or inaction of the Contractor in the performance of the work, the resulting material shall be excavated and replaced with satisfactory material by the Contractor at no additional cost to the Government. Satisfactory material removed below the depths indicated, without specific direction of the Contracting Officer, shall be replaced, at no additional cost to the Government, with satisfactory materials to the indicated excavation grade; except that concrete footings shall be increased in thickness to the bottom of the overdepth excavations and over-break in rock excavation. Satisfactory material shall be placed and compacted as specified in paragraph FILLING AND BACKFILLING. Determination of elevations and measurements of approved overdepth excavation of unsatisfactory material below grades indicated shall be done under the direction of the Contracting Officer.

3.4 DRAINAGE AND DEWATERING

3.4.1 Drainage

Surface water shall be directed away from excavation and construction sites to prevent erosion and undermining of foundations. Diversion ditches, dikes and grading shall be provided and maintained as necessary during construction. Excavated slopes and backfill surfaces shall be protected to prevent erosion and sloughing. Excavation shall be performed so that the site, the area immediately surrounding the site, and the area affecting operations at the site shall be continually and effectively drained.

3.4.2 Dewatering

Groundwater flowing toward or into excavations shall be controlled to prevent sloughing of excavation slopes and walls, boils, uplift and heave in the excavation and to eliminate interference with orderly progress of construction. French drains, sumps, ditches or trenches will not be permitted within 900 mm3 feet of the foundation of any structure, except with specific written approval, and after specific contractual provisions for restoration of the foundation area have been made. Control measures shall be taken by the time the excavation reaches the water level in order to maintain the integrity of the in situ material. While the excavation is open, the water level shall be maintained continuously, at least 1 metersfoo t below the working level.

3.5 SHORING

Shoring, including sheet piling, shall be furnished and installed as necessary to protect workmen, banks, adjacent paving, structures, and

utilities. Shoring, bracing, and sheeting shall be removed as excavations are backfilled, in a manner to prevent caving.

3.6 CLASSIFICATION OF EXCAVATION

Excavation will be unclassified regardless of the nature of material encountered.

3.7 BLASTING

Blasting shall be performed as required to complete construction. The Contractor shall submit a Blasting Plan and obtain written approval prior to performing any blasting. The plan shall contain provisions for storing, handling and transporting explosives as well as for the blasting operations. The Contractor shall be responsible for damage caused by blasting operations.

3.8 UTILITY AND DRAIN TRENCHES

Trenches for underground utilities systems and drain lines shall be excavated to the required alignments and depths. The bottoms of trenches shall be graded to secure the required slope and shall be tamped if necessary to provide a firm pipe bed. Recesses shall be excavated to accommodate bells and joints so that pipe will be uniformly supported for the entire length. Rock, where encountered, shall be excavated to a depth of at least 150 mm 6 inches below the bottom of the pipe, and the overdepth shall be backfilled with satisfactory material placed and compacted in conformance with paragraph FILLING AND BACKFILLING.

3.9 BORROW

Where satisfactory materials are not available in sufficient quantity from required excavations, borrow materials shall be obtained as specified in Section 02300A EARTHWORK.

3.10 EXCAVATED MATERIALS

Satisfactory excavated material required for fill or backfill shall be placed in the proper section of the permanent work required under this section or shall be separately stockpiled if it cannot be readily placed. Satisfactory material in excess of that required for the permanent work and all unsatisfactory material shall be disposed of as specified in Section 02300A EARTHWORK.

3.11 PREPARATION OF SURFACES FOR FILL

The ground surface shall be broken up to a minimum depth of 6 inches, pulverized, and compacted to the specified density. Material shall not be placed on surfaces that are muddy, frozen, or contain frost. Compaction shall be accomplished by equipment well suited to the soil being compacted. Material shall be moistened or aerated as necessary to provide the moisture content that will readily facilitate obtaining the specified compaction with the equipment used. Aeration shall include disking, harrowing, mixing, and other methods as may be necessary to achieve the proper moisture content.

3.12 FILLING AND BACKFILLING

Satisfactory materials shall be used in bringing fills and backfills to the lines and grades indicated and for replacing unsatisfactory materials. Materials which are unsatisfactory solely due to excess moisture shall be spread, disked, and aerated prior to placing. Satisfactory materials shall be placed in horizontal layers not exceeding 8 inches in loose thickness, or 6 inches when hand-operated compactors are used. After placing, each layer shall be plowed, disked, or otherwise broken up, moistened or aerated as necessary, thoroughly mixed and compacted as specified. Backfilling shall not begin until construction below finish grade has been approved, underground utilities systems have been inspected, tested and approved, forms removed, and the excavation cleaned of trash and debris. Backfill shall be brought to indicated finish grade and shall include backfill for underground fuel tanks, and appurtenances. Backfill shall not be placed in wet or frozen areas. Where pipe is coated or wrapped for protection against corrosion, the backfill material up to an elevation 2 feet above sewer lines and 1 foot above other utility lines shall be free from stones larger than 1 inch in any dimension. Heavy equipment for spreading and compacting backfill shall not be operated closer to foundation or retaining walls than a distance equal to the height of backfill above the top of footing; the area remaining shall be compacted in layers not more than 4 inches in compacted thickness with power-driven hand tampers suitable for the material being compacted. Backfill shall be placed carefully around pipes or tanks to avoid damage to coatings, wrappings, or tanks. Backfill shall not be placed against foundation walls prior to 7 days after completion of the walls. As far as practicable, backfill shall be brought up evenly on each side of the wall and sloped to drain away from the wall. Recompaction over underground utilities and heating lines shall be by hand tamping.

3.13 COMPACTION

Each layer of fill, backfill, and prepared subgrade shall be compacted to not less than the percentage of maximum density specified below:

	Percent Laboratory maximum density	
	Cohesive material	Cohesionless material
Fill, subgrade, and backfill		
Under structures, paved areas, around footings, and in trenches	90	95
Under sidewalks and grassed areas	85	90
Nonfrost susceptible materials		95
Under structures and paved areas, top 6 inches	95	95
Under sidewalks and exterior slabs, top 6 inches	90	95

Compacted surfaces that are disturbed by the Contractor's operations or

adverse weather shall be scarified and recompacted as specified at the Contractor's expense prior to further construction thereon.

3.14 FINAL GRADE OF SURFACES TO SUPPORT CONCRETE

Excavation to final grade shall not be made until just before concrete or capillary barrier are to be placed. Structures shall bear on level undisturbed natural subgrade or on compacted fill. Subgrade which becomes disturbed below indicated grade shall be overexcavated and backfilled, as directed at the Contractor's expense. Only excavation methods that will leave the foundation rock in a solid and unshattered condition shall be used. Approximately level surfaces shall be roughened, and sloped surfaces shall be cut as indicated into rough steps or benches to provide a satisfactory bond. Shales shall be protected from slaking or erosion resulting from ponding or flow of water.

3.15 TESTING

Testing shall be the responsibility of the Contractor and shall be performed by an approved commercial testing laboratory or may be performed by the Contractor subject to approval. Laboratory tests for moisture-density relations complete with zero air voids curve, gradation, and Atterberg limits shall be made in accordance with the procedures referenced in ASTM D 1557, ASTM D 422, and ASTM D 4318. Field tests for density and moisture content shall be made in accordance with ASTM D 1556 and ASTM D 2216 except that method ASTM D 2922 may be used to supplement tests by method ASTM D 1556. When ASTM D 2922 is used, the calibration curves shall be checked and adjusted using only the sand cone method as described in ASTM D 1556. ASTM D 2922 results in a wet unit weight of soil and when using this method, ASTM D 3017 shall be used to determine the moisture content of the soil. When soil conditions exist, such as the presence of mica, which produce inconsistent results by the nuclear gauge method D 2922, only method D 1556 shall be used. Where results by Method D 2922 differ from those by Method D 1556, the results by method D 1556 shall govern for contract compliance. In addition to Contractor reporting of test results required by paragraph SUBMITTALS, the testing laboratory shall furnish directly to the Resident Contracting Officer, an information copy of each in-place density test and related moisture and calibration results. Construction of each subsequent lift or other overlying materials shall not proceed until test results are approved. When test results indicate, as determined by the Contracting Officer, that compaction is not as specified, the material shall be removed, replaced and recompacted to meet specification requirements. Tests on recompacted areas shall be performed to determine conformance with specification requirements. Inspections and test results shall be certified by a registered professional civil engineer. These certifications shall state that the tests and observations were performed by or under the direct supervision of the engineer and that the results are representative of the materials or conditions being certified by the tests.

The following tests are required:

a. A minimum of one moisture-density test shall be performed for each classification of fill material, backfill material, and existing subgrade material.

b. One Atterberg limits test and one gradation analysis is required for every six field density tests.

c. A minimum of one sand cone density test is required for every six nuclear gauge field density tests or fraction thereof. Worksheets of sand density and sand cone calibration shall be submitted to the Contracting Officer prior to commencing work and each time a new supply of sand is used.

d. In the stockpile, excavation, or borrow areas, a minimum of two moisture content tests per day per type of material or source of material being placed during stable weather conditions shall be performed. During unstable weather, tests shall be made as dictated by local conditions and approved by the Contracting Officer. A quart jar sample of each moisture-density test material shall be delivered to the Contracting Officer at the time the test is obtained.

e. A pint jar sample of each field-density test (coincident with a sand cone density test) material shall be delivered to the Contracting Officer at the time the test is obtained.

f. Field density tests shall be performed as follows: A minimum of one test per lift per 100 feet of wall length or fraction thereof and one test per lift for each column footing is required for fill material; a minimum of one test per lift per 350 square yards or fraction thereof is required for fill material and a minimum of one test per 500 square yards or fraction thereof is required for compacted ground surfaces prior to filling. Locations of all tests shall be at the direction of the Contracting Officer.

3.16 SOIL TREATMENT

Soil treatment, provided in accordance with Section 02360 SOIL TREATMENT FOR SUBTERRANEAN TERMITE CONTROL, shall be applied just prior to backfilling against the foundation exterior and just prior to placing the capillary water barrier.

3.17 CAPILLARY WATER BARRIER

Capillary water barrier under concrete floor and area-way slabs on grade shall be placed directly on the subgrade and shall be compacted with a minimum of two passes of a hand-operated plate-type vibratory compactor.

3.18 GRADING

Areas within1.5 m 5 feet outside of each building and structure line shall be constructed true-to-grade, shaped to drain, and shall be maintained free of trash and debris until final inspection has been completed and the work has been accepted.

3.19 SPREADING TOPSOIL

Areas outside the building lines from which topsoil has been removed and areas to receive planted materials requiring topsoil, shall be topsoiled. The surface shall be free of materials that would hinder planting or maintenance operations. The subgrade shall be pulverized to a depth of50 mm 2 inches by disking or plowing for the bonding of topsoil with the subsoil. Topsoil shall then be uniformly spread, graded, and compacted to the thickness, elevations, slopes shown, and left free of surface

irregularities. Topsoil shall be compacted by one pass of a cultipacker, roller, or other approved equipment weighing1.46 kN/m to 2.34 kN/m 100 to 160 pounds per linear foot of roller. Topsoil shall not be placed when the subgrade is frozen, excessively wet, extremely dry, or in a condition otherwise detrimental to seeding, planting, or proper grading.

3.18 PROTECTION

Settlement or washing that occurs in graded, topsoiled, or backfilled areas prior to acceptance of the work, shall be repaired and grades reestablished to the required elevations and slopes.

-- End of Section --

SECTION 02316A

EXCAVATION, TRENCHING, AND BACKFILLING FOR UTILITIES SYSTEMS
NAO ModMaster 02/2003

PART 1 GENERAL

1.1 REFERENCES

The publications listed below form a part of this specification to the extent referenced. The publications are referred to in the text by basic designation only.

AMERICAN SOCIETY FOR TESTING AND MATERIALS (ASTM)

ASTM D 1556	(2000) Density and Unit Weight of Soil in Place by the Sand-Cone Method
ASTM D 1557	(2000) Laboratory Compaction Characteristics of Soil Using Modified Effort (56,000 ft-lbf/cu. ft. (2,700 kN-m/cu.m.))
ASTM D 2487	(1998) Classification of Soils for Engineering Purposes (Unified Soil Classification System)
ASTM D 2922	(1996el) Density of Soil and Soil-Aggregate in Place by Nuclear Methods (Shallow Depth)
ASTM D 3017	(1988; R 1996el) Water Content of Soil and Rock In Place by Nuclear Methods (Shallow Depth)

AMERICAN SOCIETY FOR TESTING AND MATERIALS (ASTM)

ASTM D 2216	(1998) Laboratory Determination of Water (Moisture) Content of Soil and Rock
ASTM D 422	(1963; R 1998) Particle-Size Analysis of Soils
ASTM D 4318	(2000) Liquid Limit, Plastic Limit, and Plasticity Index of Soils

U.S. ARMY CORPS OF ENGINEERS (ACOE)

EM 385-1-1	(1996) Safety and Health Requirements Manual

1.2 DEFINITIONS

1.2.1 Satisfactory Materials

Materials classified by ASTM D 2487 as GW, GP, GM, GC, SW, SP and SM are satisfactory in-situ and as final backfill. Satisfactory initial backfill material is as specified in Part 2 - PRODUCTS.

1.2.2 Unsatisfactory Materials

Materials classified by ASTM D 2487 as OL, OH, and Pt are unsatisfactory in-situ and as any kind of fill. Unsatisfactory materials also include those materials containing roots and other organic matter, trash, debris, frozen materials, and stones larger than 3 inches in any dimension.

1.2.3 Cohesionless and Cohesive Materials

Cohesionless materials shall include materials classified in ASTM D 2487 as GW, GP, SW, and SP. Cohesive materials include materials classified as GC, SC, ML, CL, MH, and CH. Materials classified as GM and SM will be identified as cohesionless only when the fines are nonplastic.

1.2.4 Rock

Rock shall consist of boulders measuring 1/2 cubic meter 1/2 cubic yard or more and materials that cannot be removed without systematic drilling and blasting such as rock material in ledges, bedded deposits, unstratified masses and conglomerate deposits, and below ground concrete or masonry structures, exceeding 1/2 cubic meter 1/2 cubic yard in volume, except that pavements shall not be considered as rock.

1.2.5 Unyielding Material

Unyielding material shall consist of rock and gravelly soils with stones greater than 3 inches in any dimension.

1.2.6 Unstable Material

Unstable material shall consist of materials too wet to properly support the utility pipe, conduit, or appurtenant structure.

1.2.7 Degree of Compaction

Degree of compaction shall be expressed as a percentage of the maximum density obtained by the appropriate procedure presented in ASTM D 1557, abbreviated hereinafter as percent maximum density.

1.3 SUBSURFACE DATA

Preliminary subsurface soil boring logs and a summary of applicable testing results are included in Attachment 5. The soil boring and test result data are believed to show the nature of the materials encountered at those specific locations and depths; conditions vary between and below explorations. These data shall be carefully studied by the Contractor, but shall not be implied as fully descriptive and complete. The Contractor shall obtain whatever additional data they deem necessary to properly bid and construct the project in accordance with the drawings and specifications.

1.4 SUBMITTALS

Government approval is required for submittals with a "G" designation; submittals not having a "G" designation are for information only. When used, a designation following the "G" designation identifies the office that will review the submittal for the Government. The following shall be submitted in accordance with Section 01330 SUBMITTAL PROCEDURES:

SD-06 Test Reports

Soils Tests; G, RE
Displacement of Sewers Tests

Copies of all laboratory and field test reports shall be submitted to the Contracting Officer within 72 hours of the completion of the test. Required soils tests for fill, backfill, and subgrade materials shall be submitted prior to beginning backfill and compaction operations.

PART 2 PRODUCTS

2.1 MATERIALS

2.1.1 Select Granular Material

Select granular material shall consist of well-graded sand, gravel, crushed gravel, crushed stone or crushed slag composed of hard, tough and durable particles, and shall contain not more than 10 percent by weight of material passing a0.075 mm No. 200 mesh sieve and no less than 95 percent by weight passing the25 mm l inch sieve. The maximum allowable aggregate size shall be 3 inches.

2.1.2 Initial Backfill Material

Initial backfill shall consist of select granular material or satisfactory materials free from rocks of such size as recommended by the pipe manufacturer. When the pipe is coated or wrapped for corrosion protection, the initial backfill material shall be free of stones larger than recommended by the pipe manufacturer.

2.1.3 BRIDGING MATERIAL

Bridging material shall be clean gravel or sandy gravel.

2.2 PLASTIC MARKING TAPE

Plastic marking tape shall be acid and alkali-resistant polyethylene film, 152 mm (6 inches) 6 inches wide with minimum thickness of0.102 mm (0.004 inch). 0.004 inch. Tape shall have a minimum strength of12.1 MPa (1750 psi) 1750 psi lengthwise and10.3 MPa (1500 psi) 1500 psi crosswise. The tape shall be manufactured with integral wires, foil backing or other means to enable detection by a metal detector when the tape is buried up to1 meter 3 feet deep. The tape shall be of a type specifically manufactured for marking and locating underground utilities. The metallic core of the tape shall be encased in a protective jacket or provided with other means to protect it from corrosion. Tape color shall be as specified in TABLE 1 and shall bear a continuous printed inscription describing the specific utility.

TABLE 1. Tape Color

TABLE 1. Tape Color

Red:	Electric
Yellow:	Gas, Oil, Dangerous Materials
Orange:	Telephone, Telegraph, Television, Police, and Fire Communications
Blue:	Water Systems
Green:	Sewer Systems

PART 3 EXECUTION

3.1 DRAINAGE AND DEWATERING

3.1.1 Drainage

Surface water shall be directed away from excavation and construction sites so as to prevent erosion and undermining of foundations. Diversion ditches, dikes and grading shall be provided and maintained as necessary during construction. Excavated slopes and backfill surfaces shall be protected to prevent erosion and sloughing. Excavation shall be performed so that the site and area immediately surrounding the site and affecting operations at the site shall be continually and effectively drained.

3.1.2 Dewatering

Groundwater flowing toward or into excavations shall be controlled to prevent sloughing of excavation slopes and walls, boils, uplift and heave in the excavation and to eliminate interference with orderly progress of construction. French drains, sumps, ditches or trenches will not be permitted within 3 feet of the foundation of any structure, except with specific written approval, and after specific contractual provisions for restoration of the foundation area have been made. Control measures shall be taken by the time the excavation reaches the water level in order to maintain the integrity of the in-situ material. While the excavation is open, the water level shall be maintained continuously below the working level.

3.1 EXCAVATION

Excavation shall be performed to the lines and grades indicated. During excavation, material satisfactory for backfilling shall be stockpiled in an orderly manner at a distance from the banks of the trench equal to 1/2 the depth of the excavation, but in no instance closer than600 mm. 2 feet. Excavated material not required or not satisfactory for backfill shall be removed from Government property. Grading shall be done as may be necessary to prevent surface water from flowing into the excavation, and any water accumulating shall be removed to maintain the stability of the bottom and sides of the excavation. Unauthorized overexcavation shall be backfilled in accordance with paragraph BACKFILLING AND COMPACTION at no additional cost to the Government.

3.1.1 Trench Excavation Requirements

The trench shall be excavated as recommended by the manufacturer of the pipe to be installed. Trench walls below the top of the pipe shall be sloped, or made vertical, and of such width as recommended in the

manufacturer's installation manual. Where no manufacturer's installation manual is available, trench walls shall be made vertical. Trench walls more than 6 metersfeet high shall be shored, cut back to a stable slope, or provided with equivalent means of protection for personnel who may be exposed to moving ground or cave in, in accordance with EM 385-1-1. Trench walls which are cut back shall be excavated to at least the angle of repose of the soil, as determined by the Contractor's qualified engineer. Special attention shall be given to slopes which may be adversely affected by weather or moisture content. The trench width below the top of pipe shall not exceed600 mm (24 inches) 24 inches plus pipe outside diameter (O.D.) for pipes of less than600 mm (24 inches) 24 inches inside diameter and shall not exceed900 mm (36 inches) 36 inches plus pipe outside diameter for sizes larger than600 mm (24 inches) 24 inches inside diameter. Where recommended trench widths are exceeded, redesign, stronger pipe, or special installation procedures shall be utilized by the Contractor. The cost of redesign, stronger pipe, or special installation procedures shall be borne by the Contractor without any additional cost to the Government.

3.1.1.1 Bottom Preparation

The bottoms of trenches shall be accurately graded to provide uniform bearing and support for the bottom quadrant of each section of the pipe. Bell holes shall be excavated to the necessary size at each joint or coupling to eliminate point bearing. Stones of 3 millimetersinches or greater in any dimension, or as recommended by the pipe manufacturer, whichever is smaller, shall be removed to avoid point bearing.

3.1.1.2 Removal of Unyielding Material

Where unyielding material is encountered in the bottom of the trench, such material shall be removed 4 millimetersinches below the required grade and replaced with suitable materials as provided in paragraph BACKFILLING AND COMPACTION.

3.1.1.3 Removal of Unsatisfactory and Unstable Materials

Where unsatisfactory or unstable material is encountered in the bottom of the trench, such material shall be removed to the depth directed and replaced to the proper grade with suitable material as provided in paragraph BACKFILLING AND COMPACTION. When removal of unstable material is required due to action or inaction of the Contractor in his performance of the work, the resulting material shall be excavated and replaced by the Contractor, as described by this paragraph, without additional cost to the Government.

3.1.1.4 Excavation for Appurtenances

Excavation for manholes, catch-basins, inlets, or similar structures shall be sufficient to leave at least300 mm 12 inches clear between the outer structure surfaces and the face of the excavation or support members Rock shall be cleaned of loose debris and cut to a firm surface either level, stepped, or serrated, as shown or as directed. Loose disintegrated rock and thin strata shall be removed. Removal of unstable material shall be as specified above. When concrete or masonry is to be placed in an excavated area, special care shall be taken not to disturb the bottom of the excavation. Excavation to the final grade level shall not be made until just before the concrete or masonry is to be placed.

3.1.1.5 Jacking, Boring, and Tunneling

Unless otherwise indicated, excavation shall be by open cut except that sections of a trench may be jacked, bored, or tunneled if, in the opinion of the Contracting Officer, the pipe, cable, or duct can be safely and properly installed and backfill can be properly compacted in such sections.

3.1.2 Stockpiles

Stockpiles of satisfactory shall be placed and graded as specified. Stockpiles shall be kept in a neat and well drained condition, giving due consideration to drainage at all times. The ground surface at stockpile locations shall be cleared, grubbed, and sealed by rubber-tired equipment, excavated satisfactory and unsatisfactory materials shall be separately stockpiled. Stockpiles of satisfactory materials shall be protected from contamination which may destroy the quality and fitness of the stockpiled material. If the Contractor fails to protect the stockpiles, and any material becomes unsatisfactory, such material shall be removed and replaced with satisfactory material from approved sources at no additional cost to the Government. Locations of stockpiles of satisfactory materials shall be as shown.

3.2.5 Blasting

Blasting shall be performed as necessary
. The Contractor shall submit a
Blasting Plan and obtain written approval prior to performing any transporting explosives as well as for the blasting operations. The Contractor shall be responsible for damage caused by blasting operations.

3.9 BORROW

Where satisfactory materials are not available in sufficient quantity from required excavations, borrow materials shall be obtained as specified in Section 02300A EARTHWORK.

3.9.1 Selection

Borrow materials shall be obtained from sources outside the limits of Government-controlled land or approved
sources within the limits of Government-controlled land. Borrow material from sources on Government-controlled land may be obtained without payment of royalties. Unless specifically provided, no borrow shall be obtained from within the limits of the project site without prior written approval. The source of borrow material shall be the Contractor's responsibility. Unless otherwise provided in the contract, the Contractor shall obtain from the owners the right to procure material, shall pay all royalties and other charges involved, and shall bear all the expense of developing the sources, including rights-of-way for hauling.

3.2 BACKFILLING AND COMPACTION

Backfill material shall consist of satisfactory material, select granular material, or initial backfill material as required. Before placing, material shall be moistened or aerated, including material which is

unsatisfactory due solely to excess moisture, as necessary to obtain specified compaction. Backfill shall be placed in layers not exceeding150 mm 6 inches loose thickness for compaction by hand operated machine compactors, and200 mm 8 inches loose thickness for other than hand operated machines, unless otherwise specified. Each layer shall be compacted to at least 95 percent maximum density for cohesionless soils and 90 percent maximum density for cohesive soils, unless otherwise specified. Water flooding or jetting
methods of compaction shall not be used.

3.2.1 Trench Backfill

The trench shall be backfilled to 2 metersfeet above the top of pipe prior to performing the required pressure tests. The joints and couplings shall be left uncovered during the pressure test. The trench shall not be backfilled until all specified tests are performed.

3.2.1.1 Replacement of Unyielding and Unsatisfactory Material

Unyielding or unsatisfactory materials removed from the bottom of the trench shall be replaced with satisfactory material or initial backfill material, as directed, and placed as specified for backfill.

3.2.1.2 Replacement of Unstable Material

Unstable material removed from the bottom of the trench or excavation shall be replaced with select granular material or approved bridging material placed in layers between 8 and 12 inches loose thickness and compacted as directed. Care shall be taken not to over compact and pump up moisture, or otherwise weaken the underlying material.150 mm

3.2.1.3 Bedding and Initial Backfill

Bedding shall be select granular material of the thickness shown or thicker as required by the pipe manufacturer. Initial backfill material shall be placed and compacted with approved tampers to a height of at least one foot above the utility pipe or conduit. The backfill shall be brought up evenly on both sides of the pipe for the full length of the pipe. Care shall be taken to ensure thorough compaction of the fill under the haunches of the pipe.

3.2.1.4 Final Backfill

The remainder of the trench, except for special materials for roadways, shall be filled with satisfactory material. Backfill material shall be placed and compacted as follows:

a. Roadways: Backfill shall be placed up to the elevation at which the requirements in Section 02300A EARTHWORK control.

b. Sidewalks, Turfed or Seeded Areas and Miscellaneous Areas: Backfill shall be deposited in layers of a maximum of300 mm 12 inch loose thickness, and compacted to 85 percent maximum density for cohesive soils and 90 percent maximum density for cohesionless soils. This requirement shall also apply to all other areas not specifically designated above.

3.2.2 Backfill for Appurtenances

After the manhole, catchbasin, inlet, or similar structure has been constructed and the concrete has been allowed to cure for 7 days, backfill shall be placed in such a manner that the structure will not be damaged by the shock of falling earth. The backfill material shall be deposited and compacted as specified for final backfill, and shall be brought up evenly on all sides of the structure to prevent eccentric loading and excessive stress.

3.3 SPECIAL REQUIREMENTS

Special requirements for both excavation and backfill relating to the specific utilities are as follows:

3.3.1 Gas Distribution

Trenches shall be excavated to a depth that will provide not less than450 mm 18 inches of cover in rock excavation and not less than600 mm 24 inches of cover in other excavation. Trenches shall be graded as specified for pipe-laying requirements in Section 02556A GAS DISTRIBUTION SYSTEM.

3.3.2 Water Lines

Trenches shall be of a depth to provide a minimum cover of 3 metersfeet from the existing ground surface, or from the indicated finished grade, whichever is lower, to the top of the pipe.

3.3.3 Heat Distribution System

Initial backfill material shall be free of stones larger than6.3 mm 1/4 inch in any dimension.

3.3.4 Electrical Distribution System

Direct burial cable and conduit or duct line shall have a minimum cover of 600 mm 24 inches from the finished grade, unless otherwise indicated.

3.3.5 Plastic Marking Tape

Warning tapes shall be installed directly above the pipe, at a depth of[450] 18 inches below finished grade unless otherwise shown.

3.4 TESTING

Testing shall be the responsibility of the Contractor and shall be performed at no additional cost to the Government.

3.5.1 Soils Tests

Soils testing shall be the responsibility of the contractor and shall be performed by an approved commercial testing laboratory, or may be performed by the contractor subject to approval. No work requiring testing will be permitted until the facilities have been approved by the Contracting Officer. Laboratory tests for moisture-density relations complete with zero air voids curve, gradation, and Atterberg limits shall be made in accordance with the procedures referenced in ASTM D 1557, ASTM D 422, and

ASTM D 4318. Field tests for density and moisture content shall be made in accordance with ASTM D 1556 and ASTM D 2216 except that method ASTM D 2922 may be used to supplement tests by method ASTM D 1556. When ASTM D 2922 is used, the calibration curves shall be checked and adjusted using only the sand cone method as described in ASTM D 1556. ASTM D 2922 results in a wet unit weight of soil and when using this method, ASTM D 3017shall be used to determine the moisture content of the soil. The calibration curves furnished with the moisture gauges shall be checked along with density calibration checks as described in ASTM D 3017. The calibration checks of both the density and moisture gauges shall be made at the beginning of a job, on each different type of material encountered, at intervals as directed by the Contracting Officer. Copies of calibration curves, results of calibration tests, and field and laboratory density tests shall be furnished to the Contracting Officer. When soil conditions exist, such as the presence of mica, which produce inconsistent results by the nuclear gauge method D 2922, only method D 1556 shall be used. Where results by Method D 2922 differ from those by Method D 1556, the results by method D 1556 shall govern for contract compliance. In addition to Contractor reporting of test results required by paragraph SUBMITTALS, the testing laboratory shall furnish directly to the Resident Contracting Officer, an information copy of each in-place density test and related moisture and calibration results. Construction of each subsequent lift or other overlying materials shall not proceed until test results are approved. When test results indicate, as determined by the Contracting Officer, that compaction is not as specified, the material shall be removed, replaced and recompacted to meet specification requirements. Tests on recompacted areas shall be performed to determine conformance with specification requirements. Inspections and test results shall be certified by a registered professional civil engineer. These certifications shall state that the tests and observations were performed by or under the direct supervision of the engineer and that the results are representative of the materials or conditions being certified by the tests.

The following test are required:

a. A minimum of one moisture-density test shall be performed for each classification of fill material, backfill material, and existing subgrade material.

b. One Atterberg limits test and one gradation analysis is required for every six field density tests.

c. A minimum of one sand cone density test is required for every six nuclear gauge field density tests or fraction thereof. Worksheets of sand density and sand cone calibration shall be submitted to the Contracting Officer prior to commencing work and each time a new supply of sand is used.

d. In the stockpile, excavation, or borrow areas, a minimum of two moisture content tests per day per type of material or source of material being placed during stable weather conditions shall be performed. During unstable weather, tests shall be made as dictated by local conditions and approved by the Contracting Officer. A quart jar sample of each moisture-density test material shall be delivered to the Contracting Officer at the time the test is obtained.

e. A pint jar sample of each field-density test (coincident with a sand cone density test) material shall be delivered to the Contracting

Officer at the time the test is obtained.

f. Field density tests shall be performed as follows: a minimum of one test per lift per 100 linear feet of trench or fraction thereof is required for fill material. Locations of all tests shall be at the direction of the Contracting Officer.

3.4.4 Displacement of Sewers Tests

After other required tests have been performed and the trench backfill compacted to the finished grade surface, the pipe shall be inspected to determine whether significant displacement has occurred. This inspection shall be conducted in the presence of the Contracting Officer. Pipe sizes larger than900 mm (36 inches) 36 inches shall be entered and examined, while smaller diameter pipe shall be inspected by shining a light or laser between manholes or manhole locations, or by the use of television cameras passed through the pipe. If, in the judgement of the Contracting Officer, the interior of the pipe shows poor alignment or any other defects that would cause improper functioning of the system, the defects shall be remedied as directed at no additional cost to the Government.

-- End of Section --

SECTION 02360

SOIL TREATMENT FOR SUBTERRANEAN TERMITE CONTROL
03/03

PART 1 GENERAL

1.1 REFERENCES

The publications listed below form a part of this specification to the extent referenced. The publications are referred to within the text by the basic designation only.

U.S. NATIONAL ARCHIVES AND RECORDS ADMINISTRATION (NARA)

7 USC Section 136	Federal Insecticide, Fungicide, and Rodenticide Act

1.2 SUBMITTALS

Government approval is required for submittals with a "G" designation; submittals not having a "G" designation are for information only or as otherwise designated. When used, a designation following the "G" designation identifies the office that will review the submittal for the Government. The following shall be submitted in accordance with Section 01330 SUBMITTAL PROCEDURES:

SD-03 Product Data

Termiticide Application Plan; G

Termiticide application plan with proposed sequence of treatment work with dates and times. The termiticide trade name, EPA registration number, chemical composition, formulation, concentration of original and diluted material, application rate of active ingredients, method of application, area/volume treated, amount applied; and the name and state license number of the state certified applicator shall be included.

Termiticides

Manufacturer's label and Material Safety Data Sheet (MSDS) for termiticides proposed for use.

Warranty

Copy of Contractor's warrany.

SD-06 Test Reports

Quality Assurance

Pest Management Report and copies of daily records signed by an officer of the Contractor.

1.3 QUALIFICATIONS

The Contractor's principal business shall be pest control. The Contractor shall be licensed and the termiticide applicators certified in the state where the work is to be performed. Termiticide applicators shall also be certified in the U.S. Environmental Protection Agency (EPA) pesticide applicator category which includes structural pest control.

1.4 SAFETY REQUIREMENTS

Formulate, treat, and dispose of termiticides and their containers in accordance with label directions. Draw water for formulating only from sites designated by the Contracting Officer, and fit the filling hose with a backflow preventer meeting local plumbing codes or standards. The filling operation shall be under the direct and continuous observation of a contractor's representative to prevent overflow. Secure pesticides and related materials under lock and key when unattended. Ensure that proper protective clothing and equipment are worn and used during all phases of termiticide application. Dispose of used pesticide containers off Government property.

1.5 DELIVERY, STORAGE, AND HANDLING

1.5.1 Delivery

Termiticide material shall be delivered to the site in the original unopened containers bearing legible labels indicating the EPA registration number and manufacturer's registered uses. All other materials to be used on site for the purpose of termite control shall be delivered in new or otherwise good condition as supplied by the manufacturer or formulator.

1.5.2 Storage

Materials shall be stored in designated areas and in accordance with manufacturer's labels. Termiticides and related materials shall be kept under lock and key when unattended.

1.5.3 Handling

Termiticides shall be handled in accordance with manufacturer's labels. Manufacturer's warnings and precautions shall be observed. Materials shall be handled preventing contamination by dirt, water, and organic material. Protect termiticides from sunlight as recommended by the manufacturer.

1.6 INSPECTION

Termiticides shall be inspected upon arrival at the job site for conformity to type and quality in accordance with paragraph TERMITICIDES. Each label shall bear evidence of registration under the Federal Insecticide, Fungicide, and Rodenticide Act (FIFRA), as amended or under appropriate regulations of the host county. Other materials shall be inspected for conformance with specified requirements. Unacceptable materials shall be removed from the job site.

1.7 WARRANTY

The Contractor shall provide a 5-year written warranty against infestations

or reinfestations by subterranean termites of the buildings or building additions constructed under this contract. Warranty shall include annual inspections of the buildings or building additions. If live subterranean termite infestation or subterranean termite damage is discovered during the warranty period, and the soil and building conditions have not been altered in the interim, the Contractor shall:

a. Retreat the soil and perform other treatment as may be necessary for elimination of subterranean termite infestation;

b. Repair damage caused by termite infestation; and

c. Reinspect the building approximately 180 days after the retreatment.

1.8 QUALITY ASSURANCE

The Contractor shall comply with 7 USC Section 136 for requirements on contractor's licensing, certification, and record keeping. The Contractor shall maintain daily records using Pest Management Maintenance Record, DD Form 1532-1 and submit copies of records when requested by the Contracting Officer. These forms may be obtained from the main web site: http://web1.whs.osd.mil/icdhome/formsrpt/WWWDDAllbyNumber_1Page10.htm. Or directly from the following websites: http://web1.whs.osd.mil/forms/DD1532-1.pdf and http://web1.whs.osd.mil/forms/DD1532.pdf. Upon completion of this work, submit Pest Management Report. DD Form 1532 identifying target pest, type of operation, brand name and manufacturer of pesticide, formulation, concentration or rate of application used.

PART 2 PRODUCTS

2.1 TERMITICIDES

Termiticides shall be currently registered by the EPA or approved for such use by the appropriate agency of the host county. Termiticide shall be selected for maximum effectiveness and duration after application. The selected termiticide shall be suitable for the soil and climatic conditions at the project site.

PART 3 EXECUTION

3.1 TECHNICAL REPRESENTATIVE

The certified installation pest management coordinator shall be the technical representative, shall be present at all meetings concerning treatment measures for subterranean termites, and may be present during treatment application. The command Pest Control Coordinator shall be contacted prior to starting work.

3.2 SITE PREPARATION

Site preparation shall be in accordance with Sections 02231 CLEARING AND GRUBBING, 02300A EARTHWORK, 02315A EXCAVATION, FILLING AND BACKFILLING FOR BUILDINGS, 02921A SEEDING, and 02930A EXTERIOR PLANTING. Work related to final grades, landscape plantings, foundations, or any other alterations to finished construction which might alter the condition of treated soils,

shall be coordinated with this specification.

3.2.1 Ground Preparation

Food sources shall be eliminated by removing debris from clearing and grubbing and post construction wood scraps such as ground stakes, form boards, and scrap lumber from the site, before termiticide application begins.

3.2.2 Verification

Before work starts, the Contractor shall verify that final grades are as indicated and smooth grading has been completed in accordance with Section 02300A EARTHWORK. Soil particles shall be finely graded with particles no larger than 25 mm 1 inch and compacted to eliminate soil movement to the greatest degree.

3.2.3 Foundation Exterior

The Contractor shall provide written verification that final grading and landscape planting operations will not disturb treatment of the soil on the exterior sides of foundation walls, grade beams, and similar structures.

3.2.4 Utilities and Vents

The Contractor shall provide written verification that the location and identity of HVAC ducts and vents, water and sewer lines, and plumbing have been accomplished prior to the termiticide application.

3.2.5 Crawl and Plenum Air Spaces

The Contractor shall provide written verification that the location and identity of crawl and plenum air spaces have been accomplished prior to the termiticide application.

3.3 SITE CONDITIONS

The following conditions shall determine the time of application.

3.3.1 Soil Moisture

Soils to be treated shall be tested immediately before application. Soil moisture content shall be tested to a minimum depth of 75 mm 3 inches. The soil moisture shall be as recommended by the termiticide manufacturer. The termiticide will not be applied when soil moisture exceeds manufacturer's recommendations because termiticides do not adhere to the soil particles in saturated soils.

3.3.2 Runoff and Wind Drift

Termiticide shall not be applied during or immediately following heavy rains. Applications shall not be performed when conditions may cause runoff or create an environmental hazard. Applications shall not be performed when average wind speed exceeds 16 km 10 miles per hour. The termiticide shall not be allowed to enter water systems, aquifers, or endanger humans or animals.

3.3.2.1 Vapor Barriers and Waterproof Membranes

Termiticide shall be applied prior to placement of a vapor barrier or waterproof membrane.

3.3.2.2 Utilities and Vents

Prior to application, HVAC ducts and vents located in treatment area shall be turned off and blocked to protect people and animals from termiticide.

3.3.3 Placement of Concrete

Concrete covering treated soils shall be placed as soon as the termiticide has reached maximum penetration into the soil. Time for maximum penetration shall be as recommended by the manufacturer.

3.4 TERMITICIDE TREATMENT

The Contractor shall submit a Termiticide Application Plan for approval before starting the specified treatment.

3.4.1 Equipment Calibration and Tank Measurement

Immediately prior to commencement of termiticide application, calibration tests shall be conducted on the application equipment to be used and the application tank shall be measured to determine the volume and contents. These tests shall confirm that the application equipment is operating within the manufacturer's specifications and will meet the specified requirements. The Contractor shall provide written certification of the equipment calibration test results within 1 week of testing.

3.4.2 Mixing and Application

Formulating, mixing, and application shall be performed in the presence of the Contracting Officer or the technical representative. A closed system is recommended as it prevents the termiticide from coming into contact with the applicator or other persons. Water for formulating shall only come from designated locations. Filling hoses shall be fitted with a backflow preventer meeting local plumbing codes or standards. Overflow shall be prevented during the filling operation. Prior to each day of use, the equipment used for applying termiticides shall be inspected for leaks, clogging, wear, or damage. Any repairs are to be performed immediately.

3.4.3 Treatment Method

For areas to be treated, the Contractor shall establish complete and unbroken vertical and/or horizontal soil poison barriers between the soil and all portions of the intended structure which may allow termite access to wood and wood related products. Application shall not be made to areas which serve as crawl spaces or for use as a plenum air space.

3.4.3.1 Surface Application

Surface application shall be used for establishing horizontal barriers. Surface applicants shall be applied as a coarse spray and provide uniform distribution over the soil surface. Termiticide shall penetrate a minimum of 25 mm 1 inch into the soil, or as recommended by the manufacturer.

3.4.3.2 Rodding and Trenching

Rodding and trenching shall be used for establishing vertical soil barriers. Trenching shall be to the depth of the foundation footing. Width of trench shall be as recommended by the manufacturer, or as indicated. Rodding or other approved method may be implemented for saturating the base of the trench with termiticide. Immediately after termiticide has reached maximum penetration as recommended by the manufacturer, backfilling of the trench shall commence. Backfilling shall be in 150 mm 6 inch rises or layers. Each rise shall be treated with termiticide.

3.4.4 Sampling

The Contracting Officer may draw from stocks at the job site, at any time and without prior notice, samples of the termiticides used to determine if the amount of active ingredient specified on the label is being applied.

3.5 VERIFICATION OF MEASUREMENT

Once termiticide application has been completed, tank contents shall be measured to determine the remaining volume. The total volume measurement of used contents for the application shall equal the established application rate for the project site conditions. The Contractor shall provide written verification of the measurements.

3.6 CLEAN UP, DISPOSAL, AND PROTECTION

Once application has been completed, the Contractor shall proceed with clean up and protection of the site without delay.

3.6.1 Clean Up

The site shall be cleaned of all material associated with the treatment measures, according to label instructions, and as indicated. Excess and waste material shall be removed and disposed off site.

3.6.2 Disposal of Termiticide

The Contractor shall dispose of residual termiticides and containers off Government property, and in accordance with label instructions and EPA criteria.

3.6.3 Protection of Treated Area

Immediately after the application, the area shall be protected from other use by erecting barricades and providing signage as required or directed. Signage shall be placed inside the entrances to crawl spaces and shall identify the space as treated with termiticide and not safe for children and animals.

3.7 CONDITIONS FOR SATISFACTORY TREATMENT

3.7.1 Equipment Calibrations and Measurements

Where results from the equipment calibration and tank measurements tests are unsatisfactory, re-treatment will be required.

3.7.2 Testing

Should an analysis, performed by a third party, indicate that the samples of the applied termiticide contain less than the amount of active ingredient specified on the label, and/or if soils are treated to a depth less than specified or approved, re-treatment will be required.

3.7.3 Disturbance of Treated Soils

Soil and fill material disturbed after treatment shall be re-treated before placement of slabs or other covering structures.

3.7.4 Termites Found Within the Warranty Period

If live subterranean termite infestation or termite damage is discovered during the warranty period, the Contractor shall re-treat the site.

3.8 RE-TREATMENT

Where re-treatment is required, the Contractor shall comply with the requirements specified in paragraph WARRANTY.

-- End of Section --

SECTION 02370A

SOIL SURFACE EROSION CONTROL

01/03

PART 1 GENERAL

1.1 REFERENCES

The publications listed below form a part of this specification to the extent referenced. The publications are referred to within the text by basic designation only.

U.S. DEPARTMENT OF AGRICULTURE (USDA)

AMS Seed Act	(1995) Federal Seed Act Regulations Part 201

ASTM INTERNATIONAL (ASTM) (ASTM)

ASTM C 39/C 39M	(2001) Compressive Strength of Cylindrical Concrete Specimens
ASTM C 42/C 42M	(1999) Obtaining and Testing Drilled Cores and Sawed Beams of Concrete
ASTM C 140	(2001ae1) Sampling and Testing Concrete Masonry Units and Related Units
ASTM D 648	(2001) Deflection Temperature of Plastics Under Flexural Load in the Edgewise Position
ASTM D 698	(2000a) Laboratory Compaction Characteristics of Soil Using Standard Effort (12,400 ft-lbf/cu. ft.(600kN-m/cu. m.))
ASTM D 977	(1998) Emulsified Asphalt
ASTM D 1248	(2000a) Polyethylene Plastics Extrusion Materials for Wire and Cable
ASTM D 1560	(1992; R 2000) Resistance to Deformation and Cohesion of Bituminous Mixtures by Means of Hveem Apparatus
ASTM D 1682	(1959T; R 1975) Test for Breaking Load and Elongation of Textile Fabrics
ASTM D 1777	(1996) Thickness of Textile Materials
ASTM D 2028	(1997) Cutback Asphalt (Rapid-Curing Type)

ASTM D 2844	(1994) Resistance R-Value and Expansion Pressure of Compacted Soils
ASTM D 3776	(1996) Mass per Unit Area (Weight)of Fabric
ASTM D 3787	(2001) Bursting Strength of Textiles - Constant-Rate-of-Traverse (CRT), Ball Burst Test
ASTM D 3884	(2001e1) Abrasion Resistance of Textile Fabrics (Rotary Platform, Double Head Method)
ASTM D 4355	(1999) Deterioration of Geotextiles From Exposure to Ultraviolet Light and Water (Xenon-Arc Type Apparatus)
ASTM D 4491	(1999a) Water Permeability of Geotextiles by Permittivity
ASTM D 4533	(1991; R 1996) Trapezoidal Tearing Strength of Geotextiles
ASTM D 4595	(1986; R 2001) Tensile Properties of Geotextiles by the Wide-Width Strip Method
ASTM D 4632	(1991; R 1996) Grab Breaking Load and Elongation of Geotextiles
ASTM D 4751	(1999a) Determining Apparent Opening Size of a Geotextile
ASTM D 4833	(2000) Index Puncture Resistance of Geotextiles, Geomembranes, and Related Products
ASTM D 4972	(2001) pH of Soils
ASTM D 5035	(1995) Breaking Force and Elongation of Textile Fabrics (Strip Method)
ASTM D 5268	(1992; R 1997) Topsoil Used for Landscaping Purposes

1.2 SUBMITTALS

Government approval is required for submittals with a "G" designation; submittals not having a "G" designation are for information only or as otherwise designated. When used, a designation following the "G" designation identifies the office that will review the submittal for the Government. The following shall be submitted in accordance with Section 01330 SUBMITTAL PROCEDURES:

SD-02 Shop Drawings

Layout

Erosion Control

Scale drawings defining areas to receive recommended materials as required by federal, state or local regulations.

1.4 DESCRIPTION OF WORK

The work shall consist of furnishing and installing soil surface erosion control materials, including fine grading, blanketing, stapling, mulching and miscellaneous related work, within project limits and in areas outside the project limits where the soil surface is disturbed from work under this contract at the designated locations. This work shall include all necessary materials, labor, supervision and equipment for installation of a complete system. This section shall be coordinated with the requirements of Section 02300A EARTHWORK and Section 02921A SEEDING.

1.5 DELIVERY, INSPECTION, STORAGE, AND HANDLING

Materials shall be stored in designated areas and as recommended by the manufacturer protected from the elements, direct exposure, and damage. Containers shall not be dropped from trucks. Material shall be free of defects that would void required performance or warranty. Geosynthetic binders and synthetic soil binders shall be delivered in the manufacturer's original sealed containers and stored in a secure area.

a. Erosion control blankets and geotextile fabric shall be furnished in rolls with suitable wrapping to protect against moisture and extended ultraviolet exposure prior to placement. Erosion control blanket and geotextile fabric rolls shall be labeled to provide identification sufficient for inventory and quality control purposes.

b. All synthetic grids, synthetic sheets, and articulating cellular concrete block grids shall be sound and free of defects that would interfere with the proper placing of the block or impair the strength or permanence of the construction. Minor cracks in synthetic grids and concrete cellular block, incidental to the usual methods of manufacture, or resulting from standard methods of handling in shipment and delivery, shall not be deemed grounds for rejection.

c. Seed shall be inspected upon arrival at the jobsite for conformity to species and quality. Seed that is wet, moldy, or bears a test date five months or older, shall be rejected.

1.6 SUBSTITUTIONS

Substitutions will not be allowed without written request and approval from the Contracting Officer.

1.7 INSTALLER'S QUALIFICATION

The installer shall be certified by the manufacturer for training and experience installing the material.

1.8 TIME LIMITATIONS

Backfilling the openings in synthetic grid systems and articulating cellular concrete block systems shall be completed a maximum 7 days after placement to protect the material from ultraviolet radiation.

1.9 WARRANTY

Erosion control material shall have a warranty for use and durable condition for project specific installations. Temporary erosion control materials shall carry a minimum eighteen month warranty. Permanent erosion control materials shall carry a minimum three year warranty.

PART 2 PRODUCTS

2.1 RECYCLED PLASTIC

Recycled plastic shall contain a minimum 85 percent of recycled post-consumer product. Recycled material shall be constructed or manufactured with a maximum 6 mm 1/4 inch deflection or creep in any member, according to ASTM D 648 and ASTM D 1248. The components shall be molded of ultraviolet (UV) and color stabilized polyethylene. The material shall consist of a minimum 75 percent plastic profile of high-density polyethylene, low-density polyethylene, and polypropylene raw material. The material shall be non-toxic and have no discernible contaminates such as paper, foil, or wood. The material shall contain a maximum 3 percent air voids and shall be free of splinters, chips, peels, buckling, and cracks. Material shall be resistant to deformation from solar heat gain.

2.2 BINDERS

2.2.1 Synthetic Soil Binders

Calcium chloride, or other standard manufacturer's spray on adhesives designed for dust suppression.

2.2.2 Geosynthetic Binders

Geosynthetic binders shall be manufactured in accordance with ASTM D 1560, ASTM D 2844; and shall be referred to as products manufactured for use as modified emulsions for the purpose of erosion control and soil stabilization. Emulsions shall be manufactured from all natural materials and provide a hard durable finish.

2.3 MULCH

Mulch shall be free from weeds, mold, and other deleterious materials. Mulch materials shall be native to the region.

2.3.1 Straw

Straw shall be stalks from oats, wheat, rye, barley, or rice, furnished in air-dry condition and with a consistency for placing with commercial mulch-blowing equipment.

2.3.2 Hay

Hay shall be native hay, sudan-grass hay, broomsedge hay, or other herbaceous mowings, furnished in an air-dry condition suitable for placing

with commercial mulch-blowing equipment.

2.3.3 Wood Cellulose Fiber

Wood cellulose fiber shall not contain any growth or germination-inhibiting factors and shall be dyed an appropriate color to facilitate placement during application. Composition on air-dry weight basis: a minimum 9 to a maximum 15 percent moisture, and between a minimum 4.5 to a maximum 6.0 pH.

2.3.4 Paper Fiber

Paper fiber mulch shall be recycled news print that is shredded for the purpose of mulching seed.

2.3.5 Shredded Bark

Locally shredded material shall be treated to retard the growth of mold and fungi.

2.3.6 Wood By-Products

Wood locally chipped or ground bark shall be treated to retard the growth of mold and fungi. Gradation: A maximum 50 mm 2 inch wide by 100 mm 4 inch long.

2.3.7 Coir

Coir shall be manufactured from 100 percent coconut fiber cured in fresh water for a minimum of 6 months.

2.3.8 Asphalt Adhesive

Asphalt adhesive shall conform to the following: Emulsified asphalt, conforming to ASTM D 977, Grade SS-1; and cutback asphalt, conforming to ASTM D 2028, Designation RC-70.

2.3.9 Mulch Control Netting

Mulch control netting may be constructed of lightweight recycled plastic, cotton, or paper or organic fiber. The recycled plastic shall be a woven or nonwoven polypropylene, nylon, or polyester containing stabilizers and/or inhibitors to make the fabric resistant to deterioration from UV, and with the following properties:

a. Minimum grab tensile strength (TF 25 #1/ASTM D 4632), 0.8 kN 180 pounds.

b. Minimum Puncture (TF 25 #4/ASTM D 3787), 0.52 MPa 75 psi in the weakest direction.

c. Apparent opening sieve size of a minimum 40 and maximum 80 (U.S. Sieve Size)..

d. Minimum Trapezoidal tear strength (TF 25 #2/ASTM D 4533), 0.22 kN 50 pounds.

2.3.10 Hydraulic Mulch

Hydraulic mulch shall be made of 100 percent virgin aspen wood fibers. Wood shall be naturally air-dried to a moisture content of 10.0 percent, plus or minus 3.0 percent. A minimum of 50 percent of the fibers shall be equal to or greater than 5 mm 0.15 inch in length and a minimum of 75 percent of the fibers shall be retained on a 28 mesh screen. No reprocessed paper fibers shall be included in the hydraulic mulch.Hydraulic mulch shall have the following mixture characteristics:

CHARACTERISTIC (typical)	VALUE
pH	5.4 ± 0.1
Organic Matter (oven dried basis),	percent 99.3 within ± 0.2
Inorganic Ash (oven dried basis),	percent 0.7 within ± 0.2
Water Holding Capacity,	percent 1,401

2.3.11 Tackifier

Tackifier shall be a blended polyacrylimide material with non-ionic galactomannan of Gramineae endosperm in powder and crystalline form with molecular weights over 250,000.

2.3.12 Dye

Dye shall be a water-activated, green color. Dye shall be pre-packaged in water dissolvable packets in the hydraulic mulch.

2.4 GEOTEXTILE FABRICS

Geotextile fabrics shall be woven of polypropylene filaments formed into a stable network so that the filaments retain their relative position to each other. Sewn seams shall have strength equal to or greater than the geotextile itself. Fabric shall be installed to withstand maximum velocity flows as recommended by the manufacturer. The geotextile shall conform to the following minimum average roll values:

Property	Performance	Test Method
Weight	264 g/m^2	ASTM D 3776
Thickness	0.635 mm	ASTM D 1777
Permeability	0.12 cm/sec	ASTM D 4491
Abrasion Resistance, Type (percent strength retained)	58 percent X 81 percent	ASTM D 3884
Tensile Grab Strength	1,467 N X 1, 933 N	ASTM D 4632
Grab Elongation	15percent X 20percent	ASTM D 4632
Burst Strength	5,510 kN/m^2	ASTM D 3787
Puncture Strength	733 N	ASTM D 4833
Trapezoid Tear	533 N X 533 N	ASTM D 4533
Apparent Opening Size	40 US Std Sieve	ASTM D 4751
UV Resistance @ 500 hrs	90 percent	ASTM D 4355

2.5 EROSION CONTROL BLANKETS

2.5.1 Erosion Control Blankets Type I

Type I blankets shall be used for erosion control and vegetation establishment on roadside embankments, abutments, berms, shoulders, and median swales where natural vegetation will provide long term stabilization. Erosion control blankets shall be a machine-produced mat of 100% straw. The blanket shall be of consistent thickness with the straw evenly distributed over the entire area of the mat. The blanket shall be covered on the top side with a photodegradable polypropylene netting having an approximate 13 by 13 mm 1/2 by 1/2 inch mesh and be sewn together on a maximum 40 mm 1.5 inch centers with degradable thread. The erosion control blanket shall have the following properties:

Material Content

Straw	100 percent with approximately .27 kg/m^2 .50 lb/yd^2 weight
Netting	One side only, lightweight photodegradable with approximately 8.0 kg/100 m^2 1.64 lb/1,000 ft^2 weight.
Thread	Degradable

Note 1: Photodegradable life a minimum of 2 months with a minimum 90 percent light penetration. Apply to slopes up to a maximum 3:1 gradient.

2.5.2 Erosion Control Blankets Type II

Erosion control blankets shall be a machine-produced mat of 100 percent straw. The blanket shall be of consistent thickness with the straw evenly distributed over the entire area of the mat. The blanket shall be covered on the top side with a polypropylene netting having an approximate 13 by 13 mm 1/2 by 1/2 inch mesh with photodegradable accelerators to provide breakdown of the netting within approximately 45 days,depending upon geographic location and elevation. The blanket shall be sewn together on a maximum 40 mm 1.5 inch centers with degradable thread. The erosion control blanket shall have the following properties:

Material Content

Straw	100 percent with approximately .27 kg/m^2 .50 lb/yd^2 weight.
Netting	One side only, photodegradable with photo accelerators and approximately 8.0 kg/100 m^2 1.64 lb/1,000 ft^2 weight.
Thread	Degradable

NOTE: Photodegradable life a minimum of 10 months with a minimum 90 percent light penetration. Apply to slopes up to a maximum 3:1 gradient.

2.5.3 Erosion Control Blankets Type III

Type III blankets shall be used for erosion control and vegetation

establishment on roadside embankments, abutments, berms, shoulders, and median swales where natural vegetation will provide long term stabilization. Erosion control blanket shall be a machine-produced mat consisting of 70 percent straw and 30 percent coconut fiber. The blanket shall be of consistent thickness with the straw and coconut fiber evenly distributed over the entire area of the mat. The blanket shall be covered on the top side with heavyweight photodegradable polypropylene netting having UV additives to delay breakdown and an approximate 16 by 16 mm 5/8 by 5/8 inch mesh, and on the bottom side with a lightweight photodegradable polypropylene netting with an approximate 13 by 13 mm 1/2 inch by 1/2 inch mesh. The blanket shall be sewn together on 40 mm 1.5 inch centers with degradable thread. The erosion control blanket shall have the following properties:

Material Content

Straw	70 percent by approximately .19 kg/m^2 .35 lb/yd^2.
Coconut Fiber	30 percent by approximately .08 kg/m^2 .15 lb/yd^2 weight.
Netting	Top side heavyweight photodegradable with UV additives and approximately 16 kg/ m^2 3 lb/1,000 ft^2 weight
	Bottom side lightweight photodegradable with approximately 8.0 kg/100 m^2 1.64 lb/1,000 ft^2 weight.

NOTE: Photodegradable life a minimum of 10 months with a minimum 90 percent light penetration. Apply to slopes with a gradient less than 1.5:1.

2.5.4 Erosion Control Blankets Type IV

Erosion control blanket shall be a machine-produced mat of 100 percent straw. The blanket shall be of consistent thickness with the straw evenly distributed over the entire area of the mat. The blanket shall be covered on the top and bottom sides with lightweight photodegradable polypropylene netting having an approximate 13 by 13 mm 1/2 by 1/2 inch mesh. The blanket shall be sewn together on 40 mm 1.5 inch centers with degradable thread. The erosion control blanket shall have the following properties:

Material Content

Straw	100 percent with approximately .27 kg/m^2 .5 lb/yd^2 weight.
Netting	Both sides lightweight photodegradable with approximately 8.0 kg/100 m^2 1.64 lb/1,000 ft^2 weight.

Material

Thread Degradable

NOTE: Photodegradable life a minimum of 2 months with a minimum 90 percent light penetration. Apply to slopes with a gradient of less than 1.5:1.

2.5.5 Erosion Control Blankets Type V

Erosion control blanket shall be a machine-produced mat of 100 percent straw. The blanket shall be of consistent thickness with the straw evenly distributed over the entire area of the mat. The blanket shall be covered on the top side with polypropylene netting having an approximate 13 by 13 mm 1/2 by 1/2 inch mesh with photodegradable accelerators to provide breakdown of the netting within approximately 45 days, depending upon geographic location and elevation. The bottom shall be covered with a polypropylene netting having an approximate 13 by 13 mm 1/2 by 1/2 inch mesh with photo accelerators. The blanket shall be sewn together on 40 mm 1.5 inch centers with degradable thread. The erosion control blanket shall have the following properties:

Material Content

Straw	100 percent with approximately .27kg/m^2 .5 lb/yd^2 weight.
Netting	Top side lightweight photodegradable with photo accelerators with approximately 8.0 kg/100 m^2 1.64 lb/1,000 ft^2 weight.
Thread	Bottom side lightweight photodegradable with photo accelerators and approximately 8.0 kg/100 m^2 1.64 lb/1,000 ft^2 weight.

NOTE: Photodegradable life a minimum of 10 months with a minimum 90 percent light penetration. Apply to slopes up to a maximum 2:1 gradient.

2.5.6 Erosion Control Blankets Type VI

Erosion control blanket shall be a machine-produced 100% biodegradable mat with a 100 percent straw fiber matrix. The blanket shall be of consistent thickness with the straw fiber evenly distributed over the entire area of the mat. The blanket shall be covered on the top side with a 100 percent biodegradable woven natural organic fiber netting. The netting shall consist of machine directional strands formed from two intertwined yarns with cross directional strands interwoven through the twisted machine strands (commonly referred to as a Leno weave) to form an approximate 13 by 13 mm 1/2 by 1/2 inch mesh. The blanket shall be sewn together with biodegradable thread on 40 mm 1.5 inch centers. The erosion control blanket shall have the following properties:

Material Content

Matrix 100 percent straw fiber with approximately

Material

.27 kg/m^2 .50 lb/yd^2 weight

Netting One side only, Leno woven 100% biodegradable natural organic fiber

Weight approximately 45.4 kg/100 m^2 9.3 lb/1,000 ft2.

Thread Biodegradable

NOTE: Photodegradable life a minimum of 10 months with a minimum 90 Percent light penetration. Apply to slopes up to a maximum 2:1 gradient.

2.5.7 Erosion Control Blankets Type VII

Erosion control blanket shall be a machine-produced 100 percent biodegradable mat with an herbaceous straw fiber matrix. The blanket shall be of consistent thickness with the straw evenly distributed over the entire area of the mat. The blanket shall be covered on the top and bottom sides with 100 percent biodegradable woven natural fiber netting. The netting shall consist of machine directional strands formed from two intertwined yarns with cross directional strands interwoven through the twisted machine strands (commonly referred to as a Leno weave) to form an approximate 13 by 13 mm 1/2 by 1/2 inch mesh. The blanket shall be sewn together with biodegradable thread on 40 mm 1.5 inch centers. The blanket shall have the following properties:

Material Content

Straw 100 percent straw fiber with approximately .27 kg/m^2 .5 lb/yd^2 weight.

Netting Top and bottom sides,Leno woven 100% biodegradable natural organic fiber with approximately 45.4 kg/100 m^2 9.3 lb/1,000ft^2 weight.

Thread Biodegradable

Note: Photodegradable life a minimum of 18 months with a minimum 90 percent light penetration. Apply to slopes up to a maximum 1.5:1 gradient.

2.5.8 Erosion Control Blankets Type VIII

Erosion control blanket shall be a machine-produced 100 percent biodegradable mat with a 70 percent herbaceous straw and 30 percent coconut fiber blend matrix. The blanket shall be of consistent thickness with the straw and coconut fiber evenly distributed over the entire area of the mat. The blanket shall be covered on the top and bottom sides with 100 percent biodegradable woven natural organic fiber netting. The netting shall consist of machine directional strands formed from two intertwined yarns with cross directional strands interwoven through the twisted machine strands (commonly referred to as a Leno weave) to form an approximate 13 by 13 mm 1/2 by 1/2 inch mesh. The blanket shall be sewn together with biodegradable thread on 40 mm 1.5 inch centers. Straw/Coconut fiber

erosion control blanket shall have the following properties:

Material Content

Matrix	70 percent straw fiber with approximately .19 kg/m^2+ .35 lb/yd^2 weight. 30 percent coconut fiber cured in fresh water with approximately .08 kg/m^2 .15 lb/yd^2 weight.
Netting	Both sides woven 100% biodegradable natural organic fiber with approximately 45.4 kg/100 m^2 9.3 lbs/1,000 ft^2 weight.
Thread	Biodegradable

NOTE: Photodegradable life a minimum of 24 months with a minimum 90 percent light penetration. Apply to slopes up to a maximum 1.5:1 gradient.

2.5.9 Erosion Control Blankets Type IX (Turf Reinforcement Mat)

Permanent erosion control/turf reinforcement mat is constructed of 100 percent coconut fiber stitch bonded between a heavy duty UV stabilized bottom net, and a heavy duty UV stabilized cuspated (crimped) middle netting overlaid with a heavy duty UV stabilized top net. The cuspated netting forms prominent closely spaced ridges across the entire width of the mat. The three nettings are stitched together on 40 mm 1.5 inch centers with UV stabilized polypropylene thread to form a permanent three dimensional structure. The following list contains further physical properties of the turf erosion control mat.

Property	Test Method	Value	Units
Ground Cover	Image Analysis	93	percent
Thickness	ASTM D 1777		16 mm 0.63 in
Mass Per Unit Area	ASTM D 3776		0.5 kg/m^2 0.92 lb/sy
Tensile Strength	ASTM D 5035		714 kg/m 480 lb/ft
Elongation	ASTM D 5035		percent
Tensile Strength	ASTM D 5035		1429 kg/m 960 lb/ft
Elongation	ASTM D 5035	31	percent
Tensile Strength	ASTM D 1682		80 kg 177 lbs
Elongation	ASTM D 1682	22	percent
Resiliency	ASTM D 1777	greater than 80	percent
UV Stability*	ASTM D 4355		68 kg 151 lbs
		86	percent
Color(permanent net)		UV Black	
Porosity(permanent net)Calculated		greater than 95	percent
Minimum Filament Diameter (permanent net)	Measured		0.8 mm 0.03 in

NOTE 1: *ASTM D 1682 Tensile Strength and percent Strength Retention of material after 1000 hours of exposure in Xenon-Arc Weatherometer

Property	Test Method	Value

NOTE 2: Photodegradable life a minimum of 36 months with a minimum 90 percent light penetration. Apply to slopes up to a maximum 1:1 gradient.

2.5.10 Erosion Control Blankets Type X (Turf Reinforcement Mat)

Permanent erosion control/turf reinforcement mat shall be constructed of 100 percent UV stabilized high denier polypropylene fiber sewn between a black UV stabilized 13 mm 1/2 inch mesh polypropylene netting on the top 24.4 kg/100 square m 5 lbs/1000 square ft and a black UV stabilized 16 mm 5/8 inch mesh polypropylene netting on the bottom 14.6 kg/100 square m 3 lbs/1000 square ft with polypropylene thread. The mat shall be resistant to photo and chemical degradation. The following list contains further physical properties of the turf reinforcement mat.

Property	Test Method	Value	Units
Thickness	ASTM D 1777		14 mm 0.56 in
Resiliency	100 PSI-3 cycles	94	percent
Mass Per Unit Area	ASTM D 3776		380 g/m^2 11.2 oz/sq yd
Tensile Strength	ASTM D 4632		16 kg 35.2 lbs
Elongation	ASTM D 4632	25.5	percent
Tensile Strength	ASTM D 4595		385.7 kg/m 259.2 lbs/ft
Elongation	ASTM D 4595	20.9	percent
Tensile Strength	ASTM D 5035		446 kg/m 300 lbs/ft
Elongation	ASTM D 5035	51	percent
Tensile Strength	ASTM D 1682		40 kg 89 lbs
Elongation	ASTM D 1682	21	percent
UV Stability*	ASTM D 4355		37 kg 81* lbs
		90*	percent

NOTE 1: *ASTM D 1682 Tensile Strength and percent Strength Retention of material after 1000 hours of exposure in Xenon-Arc Weatherometer.

NOTE 2: Photodegradable life a minimum of 36 months with a minimum 90 percent light penetration. Apply to slopes up to a maximum 1:1 gradient.

2.5.11 Erosion Control Blankets Type XI (Re-vegetation Mat)

Seed-incorporated blanket option shall consist of 2-ply 100 percent recycled, unbleached, cellulose tissue. A seed mix shall be uniformly distributed upon the bottom ply of cellulose tissue and fully overlaid with a top cellulose ply to provide complete envelopment of the seed layer. The seed-incorporated cellulose medium shall be sewn to the bottom side of the specified erosion control blanket.

Material Content

Top ply 1-ply 100 percent recycled unbleached cellulose tissue with approximately 21.0 kg/100 m^2 4.3 lbs/ 1,000 ft^2 weight.

Seed 179 kg/ha 0.033 lbs/yd^2 (160 lbs/acre)

Material

90 kg/ha 0.017 lbs/yd^2 (80 lbs/acre)

Bottom ply 1-ply recycled unbleached cellulose issue with approximately 21.0 kg/100 m^2 4.3 lbs/ (1,000 ft^2) weight.

NOTE: Photodegradable life a minimum of 36 months with a minimum 90 percent light penetration. Apply to slopes up to a minimum 1:1 gradient.

2.5.12 Seed

2.5.12.1 Seed Classification

State-approved seed of the latest season's crop shall be provided in original sealed packages bearing the producer's guaranteed analysis for percentages of mixture, purity, germination, hard seed, weed seed content, and inert material. Labels shall be in conformance with AMS Seed Act and applicable state seed laws. The Contractor shall submit the Seed Establishment Period information as specified in the Submittals paragraph.

2.5.12.2 Permanent Seed Species and Mixtures

Permanent seed species and mixtures shall be submitted in accordance with Section 02921A SEEDING.

2.5.12.3 Quality

Weed seed shall be a maximum 1 percent by weight of the total mixture.

2.5.13 Staking

Stakes shall be 100 percent biodegradable manufactured from recycled plastic or wood and shall be designed to safely and effectively secure erosion control blankets for temporary or permanent applications. The biodegradable stake shall be fully degradable by biological activity within a reasonable time frame. The bio-plastic resin used in production of the biodegradable stake shall consist of polylactide, a natural, completely biodegradable substance derived from renewable agricultural resources. The biodegradable stake must exhibit ample rigidity to enable being driven into hard ground, with sufficient flexibility to resist shattering. The biodegradable stake shall have serrations on the leg to increase resistance to pull-out from the soil.

2.5.14 Staples

Staples shall be as recommended by the manufacturer.

2.6 SYNTHETIC GRID AND SHEET SYSTEMS

Synthetic grid and sheet systems shall be formed of recycled plastic in accordance with paragraph RECYCLED PLASTICS and have interlocking components to form a uniform underlayment or strata to receive fill.

2.6.1 Synthetic Grid Systems

Grids shall be made of modular interlocking components. Blocks shall be formed as rigid interlocking components or as expandable sheets and shall be manufactured to allow articulation upward and downward while restricting lateral movement. The assembled grid system shall articulate over three-directional vertical curves, both upward and downward. Nominal grid thickness shall be as indicated. The system shall provide 100 percent coverage of the area with the cells back filled.

2.6.2 Synthetic Sheet System

Synthetic sheet thickness shall be as indicated.

2.7 CRUSHED ROCK

Crushed rock shall be crushed run between a minimum 1/2 mm inches and a maximum 1 1/2 mm inches.

2.8 GRAVEL

Gravel shall be river run between a minimum 1/2 mm inches and a maximum 1 1/2 mm inches. Contractor shall submit sieve test results for both gravel and SAND.

2.10 WATER

Unless otherwise directed, water shall be the responsibility of the Contractor. Water shall be potable or supplied by an existing irrigation system.

PART 3 EXECUTION

3.1 CONDITIONS

The Contractor shall submit a construction work sequence schedule, with the state or local government approved erosion control plan a minimum of 30 days prior to start of construction. The work schedule shall coordinate the timing of land disturbing activities with the provision of erosion control measures. Erosion control operations shall be performed under favorable weather conditions; when excessive moisture, frozen ground or other unsatisfactory conditions prevail, the work shall be stopped as directed. When special conditions warrant a variance to earthwork operations, a revised construction schedule shall be submitted for approval. Erosion control materials shall not be applied in adverse weather conditions which could affect their performance.

3.1.1 Finished Grade

The Contractor shall verify that finished grades are as indicated on the drawings; finish grading and compaction shall be completed in accordance with Section 02300A EARTHWORK, prior to the commencement of the work. The location of underground utilities and facilities in the area of the work shall be verified and marked. Damage to underground utilities and facilities shall be repaired at the Contractor's expense.

3.1.2 Placement of Erosion Control Blankets

Before placing the erosion control blankets, ensure the subgrade has been graded smooth; has no depressed, void areas; is free from obstructions, such as tree roots, projecting stones or other foreign matter. Vehicles shall not be permitted directly on the blankets.

3.1.3 Synthetic Grid

Before placing the grid system, ensure that the subgrade has been properly grubbed of large roots and rocks; compacted; has been graded smooth; has no depressed, void, soft or uncompacted areas; is free from obstructions, such as tree roots, projecting stones or other foreign matter; and has been seeded.

3.2 SITE PREPARATION

3.2.1 Soil Test

Soil shall be tested in accordance with ASTM D 5268 and ASTM D 4972 for determining the particle size and mechanical analysis. Sample collection onsite shall be random over the entire site. The test shall determine the soil particle size as compatible for the specified material.

3.2.2 Layout

Erosion control material locations may be adjusted to meet field conditions. When soil tests result in unacceptable particle sizes, a shop drawing shall be submitted indicating the corrective measures.

3.2.3 Protecting Existing Vegetation

When there are established lawns in the work area, the turf shall be covered and/or protected or replaced after construction operations. Existing trees, shrubs, and plant beds that are to be preserved shall be barricaded along the dripline. Damage to existing trees shall be mitigated by the Contractor at no additional cost to the Government. Damage shall be assessed by a state certified arborist or other approved professional using the National Arborist Association's tree valuation guideline.

3.2.4 Obstructions Below Ground

When obstructions below ground affect the work, shop drawings showing proposed adjustments to placement of erosion control material shall be submitted for approval.

3.3 INSTALLATION

3.3.1 Synthetic Binders

Synthetic binders shall be applied heaviest at edges of areas and at crests of ridges and banks to prevent displacement. Binders shall be applied to the remainder of the area as recommended by the manufacturer.

3.3.2 Seeding

When seeding is required prior to installing mulch on synthetic grid systems the Contractor shall verify that seeding will be completed in accordance with Sections 02300A EARTHWORK and 02921A SEEDING.

3.3.3 Mulch Installation

Mulch shall be installed in the areas indicated. Mulch shall be applied evenly.

3.3.4 Mulch Control Netting

Netting may be stapled over mulch according to manufacturer's recommendations.

3.3.5 Mechanical Anchor

Mechanical anchor shall be a V-type-wheel land packer; a scalloped-disk land packer designed to force mulch into the soil surface; or other suitable equipment.

3.3.6 Asphalt Adhesive Tackifier

Asphalt adhesive tackifier shall be sprayed at a rate between 666 to 866 liters per hectare 10 to 13 gallons per 1000 square feet. Sunlight shall not be completely excluded from penetrating to the ground surface.

3.3.7 Non-Asphaltic Tackifier

Hydrophilic colloid shall be applied at the rate recommended by the manufacturer, using hydraulic equipment suitable for thoroughly mixing with water. A uniform mixture shall be applied over the area.

3.3.8 Asphalt Adhesive Coated Mulch

Hay or straw mulch may be spread simultaneously with asphalt adhesive applied at a rate between 666 to 866 liters per hectare 10 to 13 gallons per 1000 square feet, using power mulch equipment which shall be equipped with suitable asphalt pump and nozzle. The adhesive-coated mulch shall be applied evenly over the surface. Sunlight shall not be completely excluded from penetrating to the ground surface.

3.3.9 Wood Cellulose Fiber, Paper Fiber, and Recycled Paper

Wood cellulose fiber, paper fiber, or recycled paper shall be applied as part of the hydraulic mulch operation.

3.3.10 Hydraulic Mulch Application

3.3.10.1 Unseeded Area

Hydraulic mulch shall be installed as indicated and in accordance with manufacturer's recommendations. Hydraulic mulch shall be mixed with water at the rate recommended by the manufacturer for the area to be covered. Mixing shall be done in equipment manufactured specifically for hydraulic mulching work, including an agitator in the mixing tank to keep the mulch evenly disbursed.

3.3.11 Erosion Control Blankets

a. Erosion control blankets shall be installed as indicated and in accordance with manufacturer's recommendations. The extent of

erosion control blankets shall be as shown on drawings.

b. Erosion control blankets shall be oriented in vertical strips and anchored with staples, as indicated. Adjacent strips shall be abutted to allow for installation of a common row of staples. Horizontal joints between erosion control blankets shall be overlapped sufficiently to accommodate a common row of staples with the uphill end on top.

c. Where exposed to overland sheet flow, a trench shall be located at the uphill termination. The erosion control blanket shall be stapled to the bottom of the trench. Backfill and compact the trench as required.

d. Where terminating in a channel containing an installed blanket, the erosion control blanket shall overlap installed blanket sufficiently to accommodate a common row of staples.

3.3.12 Synthetic Sheet System

Synthetic sheet systems shall be anchored in accordance with the manufacturer's recommendation. Systems shall be placed on a well graded surface and then backfilled, a maximum seven days after placement, to protect the material from ultraviolet radiation. As the installation progresses, backfilling shall include contiguous perimeter termination trenches.

3.3.12.1 Sheet System Revegetation

For areas not requiring re-vegetation, openings shall be backfilled to grade with well graded fill material and surface prepared for finish as indicated on the drawings. For areas requiring re-vegetation, openings shall be backfilled using well graded fill and topsoil as indicated on the drawings.

3.3.12.2 Sheet System Grids

Each pair of grids shall cover grade without gaps or open spaces between them. The system shall provide 100 percent coverage of the area with the cells backfilled.

3.3.12.3 Sheet System Seeding

Seed shall be installed in accordance with Section 02921A SEEDING.

3.3.12.4 Grid System Grids

Synthetic grid systems shall be anchored in accordance with the manufacturer's recommendation. Interlocking grid systems shall be placed on well graded surface and the backfilling of openings shall be completed a maximum 7 days after placement, to protect the material from ultraviolet radiation. As the installation progresses, backfilling shall include contiguous perimeter termination trenches.

3.3.13 Grids

3.3.13.1 Grid System Revegetation

For areas not requiring re-vegetation, openings shall be backfilled with a minimum 13 mm 1/2 inch nominal size crushed rock, to a minimum 50 mm 2 inch depth.

3.3.13.2 Synthetic Grids

Each pair of grids shall cover grade without gaps or open spaces between them. The system shall provide 100 percent coverage of the area with the cells backfilled.

3.3.13.3 Grid System Seeding

Seed shall be installed in accordance with Section 02921A SEEDING.

3.4 CLEAN-UP

Excess material, debris, and waste materials shall be disposed offsite at an approved landfill or recycling center. Adjacent paved areas shall be cleared. Immediately upon completion of the installation in an area, the area shall be protected against traffic or other use by erecting barricades and providing signage as required, or as directed.

3.5 WATERING SEED

Watering shall be started immediately after installing erosion control blanket type XI (revegetation mat). Water shall be applied to supplement rainfall at a sufficient rate to ensure moist soil conditions to a minimum 25 mm 1 inch depth. Run-off and puddling shall be prevented. Watering trucks shall not be driven over turf areas, unless otherwise directed. Watering of other adjacent areas or plant material shall be prevented.

3.6 MAINTENANCE RECORD

A record shall be furnished describing the maintenance work performed, record of measurements and findings for product failure, recommendations for repair, and products replaced.

3.6.1 Maintenance

Maintenance shall include eradicating weeds; protecting embankments and ditches from surface erosion; maintaining the performance of the erosion control materials and mulch; protecting installed areas from traffic.

3.6.1.1 Maintenance Instructions

Written instructions containing drawings and other necessary information shall be furnished, describing the care of the installed material; including, when and where maintenance should occur, and the procedures for material replacement.

3.6.1.2 Patching and Replacement

Unless otherwise directed, material shall be placed, seamed or patched as recommended by the manufacturer. Material not meeting the required performance as a result of placement, seaming or patching shall be removed from the site. The Contractor shall replace the unacceptable material at no additional cost to the Government.

3.7 SATISFACTORY STAND OF GRASS PLANTS

When erosion control blanket type XI (revegetation mat) is installed, the grass plants shall be evaluated for species and health when the grass plants are a minimum 25 mm 1 inch high. A satisfactory stand of grass plants from the revegetation mat area shall be a minimum 100 grass plants per square meter 10 grass plants per square foot. The total bare spots shall not exceed 2 percent of the total revegetation mat area.

-- End of Section --

SECTION 02510A

WATER DISTRIBUTION SYSTEM
05/02

PART 1 GENERAL

1.1 REFERENCES

The publications listed below form a part of this specification to the extent referenced. The publications are referred to in the text by basic designation only.

AMERICAN RAILWAY ENGINEERING & MAINTENANCE-OF-WAY ASSOCIATION (AREMA)

AREMA Manual	(1999) Manual for Railway Engineering (4 Vol.)

AMERICAN SOCIETY FOR TESTING AND MATERIALS (ASTM)

ASTM A 36/A 36M	(1997ael) Carbon Structural Steel
ASTM A 53	(1999b) Pipe, Steel, Black and Hot-Dipped, Zinc-Coated, Welded and Seamless
ASTM B 88	(1996) Seamless Copper Water Tube
ASTM B 88M	(1996) Seamless Copper Water Tube (Metric)
ASTM C 76	(1999) Reinforced Concrete Culvert, Storm Drain, and Sewer Pipe
ASTM C 76M	(1999a) Reinforced Concrete Culvert, Storm Drain, and Sewer Pipe (Metric)
ASTM D 1599	(1999) Resistance to Short-Time Hydraulic Failure Pressure of Plastic Pipe, Tubing, and Fittings
ASTM D 1784	(1999ael) Rigid Poly(Vinyl Chloride) (PVC) Compounds and Chlorinated Poly(Vinyl Chloride) (CPVC) Compounds
ASTM D 1785	(1999) Poly(Vinyl Chloride) (PVC) Plastic Pipe, Schedules 40, 80, and 120
ASTM D 2241	(2000) Poly(Vinyl Chloride) (PVC) Pressure-Rated Pipe (SDR Series)
ASTM D 2464	(1999) Threaded Poly(Vinyl Chloride) (PVC) Plastic Pipe Fittings, Schedule 80
ASTM D 2466	(2002) Poly(Vinyl Chloride) (PVC) Plastic

	Pipe Fittings, Schedule 40
ASTM D 2467	(2002) Poly(Vinyl Chloride) (PVC) Plastic Pipe Fittings, Schedule 80
ASTM D 2564	(1996a) Solvent Cements for Poly(Vinyl Chloride) (PVC) Plastic Piping Systems
ASTM D 2657	(1997) Heat Fusion Joining Polyolefin Pipe and Fittings
ASTM D 2774	(1994) Underground Installation of Thermoplastic Pressure Piping
ASTM D 2855	(1996) Making Solvent-Cemented Joints with Poly(Vinyl Chloride) (PVC) Pipe and Fittings
ASTM D 2996	(1995) Filament-Wound "Fiberglass" (Glass-Fiber-Reinforced Thermosetting-Resin) Pipe
ASTM D 2997	(1995) Centrifugally Cast "Fiberglass" (Glass-Fiber-Reinforced Thermosetting-Resin) Pipe
ASTM D 3139	(1998) Joints for Plastic Pressure Pipes Using Flexible Elastomeric Seals
ASTM D 3839	(1994a) Underground Installation of "Fiberglass" (Glass-Fiber-Reinforced Thermosetting Resin) Pipe
ASTM D 4161	(1996) "Fiberglass"(Glass-Fiber-Reinforced Thermosetting Resin) Pipe Joints Using Elastomeric Seals
ASTM F 477	(2002el) Elastomeric Seals (Gaskets) for Joining Plastic Pipe
ASTM F 1483	(1998) Oriented Poly(Vinyl Chloride), PVCO, Pressure Pipe

ASME INTERNATIONAL (ASME)

ASME B1.20.1	(1983; R 2001) Pipe Threads, General Purpose (Inch)
ASME B16.1	(1998) Cast Iron Pipe Flanges and Flanged Fittings
ASME B16.3	(1992) Malleable Iron Threaded Fittings
ASME B16.26	(1988) Cast Copper Alloy Fittings for Flared Copper Tubes
ASME B36.10M	(1996) Welded and Seamless Wrought Steel

Pipe

AMERICAN WATER WORKS ASSOCIATION (AWWA)

AWWA B300	(1992) Hypochlorites
AWWA B301	(1992) Liquid Chlorine
AWWA C104	(1995) Cement-Mortar Lining for Ductile-Iron Pipe and Fittings for Water
AWWA C110	(1998) Ductile-Iron and Gray-Iron Fittings, 3 In. Through 48 In. (76 mm through 1219 mm), for Water
AWWA C111	(2000) Rubber-Gasket Joints for Ductile-Iron Pressure Pipe and Fittings
AWWA C115	(1999) Flanged Ductile-Iron Pipe with Ductile-Iron or Gray-Iron Threaded Flanges
AWWA C151	(2002) Ductile-Iron Pipe, Centrifugally Cast, for Water
AWWA C153	(2000) Ductile-Iron Compact Fittings for Water Service
AWWA C200	(1997) Steel Water Pipe - 6 In. (150 mm) and Larger
AWWA C203	(1997) Coal-Tar Protective Coatings and Linings for Steel Water Pipelines - Enamel and Tape - Hot-Applied
AWWA C205	(1995) Cement-Mortar Protective Lining and Coating for Steel Water Pipe - 4 In. (100 mm) and Larger - Shop Applied
AWWA C207	(1994) Steel Pipe Flanges for Waterworks Service - Sizes 4 In. Through 144 In. (100 mm through 3,600 mm)
AWWA C208	(1996) Dimensions for Fabricated Steel Water Pipe Fittings
AWWA C300	(1997) Reinforced Concrete Pressure Pipe, Steel-Cylinder Type, for Water and Other Liquids
AWWA C301	(1992) Prestressed Concrete Pressure Pipe, Steel-Cylinder Type, for Water and Other Liquids
AWWA C303	(1995) Concrete Pressure Pipe, Bar-Wrapped, Steel Cylinder Type
AWWA C500	(1993; C500a) Metal-Sealed Gate Valves for

	Water Supply Service
AWWA C502	(1994; C502a) Dry-Barrel Fire Hydrants
AWWA C503	(1997) Wet-Barrel Fire Hydrants
AWWA C504	(1994) Rubber-Seated Butterfly Valves
AWWA C509	(1994; Addendum 1995) Resilient-Seated Gate Valves for Water Supply Service
AWWA C600	(1999) Installation of Ductile-Iron Water Mains and Their Appurtenances
AWWA C606	(1997) Grooved and Shouldered Joints
AWWA C651	(1992) Disinfecting Water Mains
AWWA C700	(1995) Cold-Water Meters - Displacement Type, Bronze Main Case
AWWA C701	(1988) Cold-Water Meters - Turbine Type, for Customer Service
AWWA C702	(1992) Cold-Water Meters - Compound Type
AWWA C703	(1996) Cold-Water Meters - Fire Service Type
AWWA C704	(1992) Propeller-Type Meters Waterworks Applications
AWWA C706	(1996) Direct-Reading, Remote-Registration Systems for Cold-Water Meters
AWWA C707	(1982; R 1992) Encoder-Type Remote-Registration Systems for Cold-Water Meters
AWWA C800	(1989) Underground Service Line Valves and Fittings
AWWA C900	(1997; C900a) Polyvinyl Chloride (PVC) Pressure Pipe, 4 In. Through 12 In., for Water Distribution
AWWA C901	(1996) Polyethylene (PE) Pressure Pipe and Tubing, 1/2 In. Through 3 In., for Water Service
AWWA C905	(1997) Polyvinyl Chloride (PVC) Water Transmission Pipe, Nominal Diameters 14 In. Through 36 In.
AWWA C909	(1998) Molecularly Oriented Polyvinyl Chloride (PVCO) Pressure Pipe, 4 IN through 12 IN (100 mm through 300 mm), for

	Water Distribution
AWWA C950	(1995) Fiberglass Pressure Pipe
AWWA M23	(2002) Manual: PVC Pipe - Design and Installation

ASBESTOS CEMENT PIPE PRODUCERS ASSOCIATION (ACPPA)

ACPPA 1344	(1988) Recommended Work Practices for A/C Pipe

DUCTILE IRON PIPE RESEARCH ASSOCIATION (DIPRA)

DIPRA TRD	(1997) Thrust Restraint Design for Ductile Iron Pipe

MANUFACTURERS STANDARDIZATION SOCIETY OF THE VALVE AND FITTINGS INDUSTRY (MSS)

MSS SP-80	(1997) Bronze Gate, Globe, Angle and Check Valves

NATIONAL FIRE PROTECTION ASSOCIATION (NFPA)

NFPA 24	(1995) Installation of Private Fire Service Mains and Their Appurtenances
NFPA 49	(1994) Hazardous Chemicals Data
NFPA 325-1	(1994) Fire Hazard Properties of Flammable Liquids, Gases, and Volatile Solids
NFPA 704	(1996) Identification of the Fire Hazards of Materials for Emergency Response
NFPA 1961	(1997) Fire Hose

NSF INTERNATIONAL (NSF)

NSF 14	(1998) Plastics Piping Components and Related Materials
NSF 61	(1999) Drinking Water System Components - Health Effects (Sections 1-9)

THE SOCIETY FOR PROTECTIVE COATINGS (SSPC)

SSPC Paint 21	(1991) White or Colored Silicone Alkyd Paint
SSPC Paint 25	(1991) Red Iron Oxide, Zinc Oxide, Raw Linseed Oil and Alkyd Primer (Without Lead and Chromate Pigments)

1.2 PIPING

This section covers water distribution service lines, and connections to building service at a point approximately 1.5 m 5 feet outside buildings and structures to which service is required. The Contractor shall have a copy of the manufacturer's recommendations for each material or procedure to be utilized available at the construction site at all times.

1.2.1 Service Lines

Piping for water service lines less than 80 mm (3 inches) 3 inchesin diameter shall be polyvinyl chloride (PVC) plastic, Oriented PVC plastic polyethylene, or copper tubing, unless otherwise shown or specified. Piping for water service lines 80 mm (3 inches) 3 inchesand larger shall be ductile iron, polyvinyl chloride (PVC) plastic unless otherwise shown or specified.

1.2.2 Distribution Lines 80 mm (3 Inches) or Larger

Piping for water distribution lines 80 mm (3 inches) 3 inches or larger shall be ductile iron, polyvinyl chloride (PVC) through 900 mm (36 inch) 36 inch nominal diameter plastic unless otherwise shown or specified.

1.2.4 Sprinkler Supply Lines

Piping for water lines supplying sprinkler systems for building fire protection shall conform to NFPA 24 from the point of connection with the water distribution system to the building 1.5 m 5 foot line.

1.2.5 Potable Water Lines

If required by state regulations governing utilities, piping and components of potable water systems which come in contact with the potable water shall conform to NSF 61.

1.2.6 Plastic Piping System

If required by state regulations governing utilities, plastic piping system components (PVC, polyethylene, thermosetting resin and reinforced plastic mortar pressure) intended for transportation of potable water shall comply with NSF 14 and be legibly marked with their symbol.

1.2.7 Excavation, Trenching, and Backfilling

Excavation, trenching, and backfilling shall be in accordance with the applicable provisions of Section 02316 EXCAVATION, TRENCHING, AND BACKFILLING FOR UTILITIES SYSTEMS, except as modified herein.

1.4 MANUFACTURER'S REPRESENTATIVE

The Contractor shall have a manufacturer's field representative present at the jobsite during the installation and testing of PE, RTRP, and/or RPMP pipe to provide technical assistance and to verify that the materials are being installed in accordance with the manufacturer's prescribed procedures. When the representative feels that the Contractor is installing and testing the PE, RTRP, and/or RPMP pipe in a satisfactory manner, certification shall be written to note which individuals employed by the Contractor are capable of properly installing the pipe. The field representative shall advise the Contractor of unsatisfactory conditions

immediately when they occur. Such conditions include improper diameter of pipe ends, damaged interior liner, poorly prepared joints, improper curing of joints, moving pipe before joints are cured, bending pipe to follow abrupt changes in trench contours, leaving pipe ends open in trench overnight, not properly drying joints after rain storms, exceeding effective adhesive life, sharp objects in trench bed, backfill that could damage pipe, improper procedure for concrete encasement of pipe, omission of thrust blocks at changes in direction or any other condition which could have an adverse effect on the satisfactory completion and operation of the piping system.

1.5 SUBMITTALS

Government approval is required for submittals with a "G" designation; submittals not having a "G" designation are for information only. When used, a designation following the "G" designation identifies the office that will review the submittal for the Government. The following shall be submitted in accordance with Section 01330 SUBMITTAL PROCEDURES:

SD-03 Product Data

Satisfactory Installation.

A statement signed by the principal officer of the contracting firm stating that the installation is satisfactory and in accordance with the contract drawings and specifications, and the manufacturer's prescribed procedures and techniques, upon completion of the project and before final acceptance.

SD-06 Test Reports

Bacteriological Disinfection.

Test results from commercial laboratory verifying disinfection.

SD-07 Certificates

Meters.

Manufacturer's certificate stating that each meter furnished has been tested for accuracy of registration and compliance with the accuracy and capacity requirements of the appropriate AWWA standard.

1.6 HANDLING

Pipe and accessories shall be handled to ensure delivery to the trench in sound, undamaged condition, including no injury to the pipe coating or lining. If the coating or lining of any pipe or fitting is damaged, the repair shall be made by the Contractor in a satisfactory manner, at no additional cost to the Government. No other pipe or material shall be placed inside a pipe or fitting after the coating has been applied. Pipe shall be carried into position and not dragged. Use of pinch bars and tongs for aligning or turning pipe will be permitted only on the bare ends of the pipe. The interior of pipe and accessories shall be thoroughly cleaned of foreign matter before being lowered into the trench and shall be kept clean during laying operations by plugging or other approved method.

Before installation, the pipe shall be inspected for defects. Material found to be defective before or after laying shall be replaced with sound material without additional expense to the Government. Rubber gaskets that are not to be installed immediately shall be stored in a cool and dark place.

1.6.2 Polyethylene (PE) Pipe Fittings and Accessories

PE pipe, fittings, and accessories shall be handled in conformance with AWWA C901.

1.6.3 Miscellaneous Plastic Pipe and Fittings

Polyvinyl Chloride (PVC), Reinforced Thermosetting Resin Pipe (RTRP), and Reinforced Plastic Mortar Pressure (RPMP) pipe and fittings shall be handled and stored in accordance with the manufacturer's recommendations. Storage facilities shall be classified and marked in accordance with NFPA 704, with classification as indicated in NFPA 49 and NFPA 325-1.

PART 2 PRODUCTS

2.1 PIPE

Pipe shall conform to the respective specifications and other requirements specified below.

2.1.2 Plastic Pipe

2.1.2.1 PE Plastic Pipe

Pipe, tubing, and heat-fusion fittings shall conform to AWWA C901.

2.1.2.2 PVC Plastic Pipe

Pipe, couplings and fittings shall be manufactured of material conforming to ASTM D 1784, Class 12454B.

a. Pipe Less Than 100 mm (4 inch) 4 inch Diameter:

(1) Screw-Joint: Pipe shall conform to dimensional requirements of ASTM D 1785 Schedule 80, with joints meeting requirements of 1.03 MPa (150 psi) 150 psi working pressure, 1.38 MPa (200 psi) 200 psi hydrostatic test pressure, unless otherwise shown or specified. Pipe couplings when used, shall be tested as required by ASTM D 2464.

(2) Elastomeric-Gasket Joint: Pipe shall conform to dimensional requirements of ASTM D 1785 Schedule 40, with joints meeting the requirements of 1.03 MPa (150 psi) 150 psi working pressure, 1.38 MPa (200 psi) 200 psi hydrostatic test pressure, unless otherwise shown or specified, or it may be pipe conforming to requirements of ASTM D 2241, elastomeric joint, with the following applications:

SDR	Maximum Working Pressure MPa	Minimum Hydrostatic Pressure MPa

SDR	Maximum Working Pressure MPa	Minimum Hydrostatic Pressure MPa
26	0.689	0.917
21	0.827	1.103
17	1.034	1.379
13.5	1.379	1.834

SDR	Maximum Working Pressure psi	Minimum Hydrostatic Pressure psi
26	100	133
21	120	160
17	150	200
13.5	200	266

(3) Solvent Cement Joint: Pipe shall conform to dimensional requirements of ASTM D 1785 or ASTM D 2241 with joints meeting the requirements of 1.03 MPa (150 psi) 150 psi working pressure and 1.38 MPa (200 psi) 200 psi hydrostatic test pressure.

b. Pipe 100 through 300 mm 4 through 12 inch Diameter: Pipe, couplings and fittings shall conform to AWWA C900, Class 150, CIOD pipe dimensions, elastomeric-gasket joint, unless otherwise shown or specified.

c. Pipe 350 through 900 mm 14 through 36 inch Diameter: Pipe shall conform to AWWA C905 unless otherwise shown or specified.

2.1.2.3 Oriented Polyvinyl Chloride (PVCO) Plastic Pipe

Pipe, couplings, and fittings shall be manufactured of material conforming to ASTM D 1784, Class 12454-B. Pipe shall conform to AWWA C909, Class 150, and to ASTM F 1483 and shall have an outside diameter equal to cast iron outside diameter.

2.1.5 Ductile-Iron Pipe

Ductile-iron pipe shall conform to AWWA C151, working pressure not less than 1.03 MPa (150 psi), 150 psi, unless otherwise shown or specified. Pipe shall be cement-mortar lined in accordance with AWWA C104. Linings shall be standard. Flanged ductile iron pipe with threaded flanges shall be in accordance with AWWA C115.

2.1.7 Copper Tubing

Copper tubing shall conform to ASTM B 88M ASTM B 88, Type K, annealed.

2.2 FITTINGS AND SPECIALS

2.2.2 PVC Pipe System

a. For pipe less than 100 mm (4 inch) 4 inch diameter, fittings for

threaded pipe shall conform to requirements of ASTM D 2464, threaded to conform to the requirements of ASME B1.20.1 for use with Schedule 80 pipe and fittings; fittings for solvent cement jointing shall conform to ASTM D 2466 or ASTM D 2467; and fittings for elastomeric-gasket joint pipe shall be iron conforming to AWWA C110 or AWWA C111. Iron fittings and specials shall be cement-mortar lined (standard thickness) in accordance with AWWA C104.

b. For pipe 100 mm (4 inch) 4 inch diameter and larger, fittings and specials shall be iron, bell end in accordance with AWWA C110, 1.03 MPa (150 psi) 150 psi pressure rating unless otherwise shown or specified, except that profile of bell may have special dimensions as required by the pipe manufacturer; or fittings and specials may be of the same material as the pipe with elastomeric gaskets, all in conformance with AWWA C900. Iron fittings and specials shall be cement-mortar lined (standard thickness) in accordance with AWWA C104. Fittings shall be bell and spigot or plain end pipe, or as applicable. Ductile iron compact fittings shall be in accordance with AWWA C153.

2.2.4 Ductile-Iron Pipe System

Fittings and specials shall be suitable for 1.03 MPa (150 psi) 150 psi pressure rating, unless otherwise specified. Fittings and specials for mechanical joint pipe shall conform to AWWA C110. Fittings and specials for use with push-on joint pipe shall conform to AWWA C110 and AWWA C111. Fittings and specials for grooved and shouldered end pipe shall conform to AWWA C606. Fittings and specials shall be cement-mortar lined (standard thickness) in accordance with AWWA C104. Ductile iron compact fittings shall conform to AWWA C153.

2.2.6 Copper Tubing System

Fittings and specials shall be flared and conform to ASME B16.26.

2.3 JOINTS

2.3.2 Plastic Pipe Jointing

2.3.2.1 PE Pipe

Joints for pipe fittings and couplings shall be strong tight joints as specified for PE in Paragraph INSTALLATION. Joints connecting pipe of differing materials shall be made in accordance with the manufacturer's recommendation, and as approved by the Contracting Officer.

2.3.2.2 PVC Pipe

Joints, fittings, and couplings shall be as specified for PVC pipe. Joints connecting pipe of differing materials shall be made in accordance with the manufacturer's recommendations, and as approved by the Contracting Officer.

2.3.2.3 PVCO Pipe

Joints shall conform to ASTM D 3139. Elastomeric gaskets shall conform to ASTM F 477.

2.3.5 Ductile-Iron Pipe Jointing

a. Mechanical joints shall be of the stuffing box type and shall conform to AWWA C111.

b. Push-on joints shall conform to AWWA C111.

c. Rubber gaskets and lubricants shall conform to the applicable requirements of AWWA C111.

2.3.9 Copper Tubing Jointing

Joints shall be compression-pattern flared and shall be made with the specified fittings.

2.4 VALVES

2.4.1 Check Valves

Check valves shall be designed for a minimum working pressure of 1.03 MPa (150 psi) 150 psi or as indicated. Valves shall have a clear waterway equal to the full nominal diameter of the valve. Valves shall open to permit flow when inlet pressure is greater than the discharge pressure, and shall close tightly to prevent return flow when discharge pressure exceeds inlet pressure. The size of the valve, working pressure, manufacturer's name, initials, or trademark shall be cast on the body of each valve. Valves 50 mm (2 inches) 2 inches and larger shall be outside lever and spring type.

a. Valves 50 mm (2 inches) 2 inches and smaller shall be all bronze designed for screwed fittings, and shall conform to MSS SP-80, Class 150, Types 3 and 4 as suitable for the application.

b. Valves larger than 50 mm (2 inches) 2 inches shall be iron body, bronze mounted, shall have flanged ends, and shall be the non-slam type. Flanges shall be the Class 125 type conforming to ASME B16.1.

2.4.2 Gate Valves

Gate valves shall be designed for a working pressure of not less than 1.03 MPa (150 psi).150 psi. Valve connections shall be as required for the piping in which they are installed. Valves shall have a clear waterway equal to the full nominal diameter of the valve, and shall be opened by turning counterclockwise. The operating nut or wheel shall have an arrow, cast in the metal, indicating the direction of opening.

a. Valves smaller than 80 mm (3 inches) 3 inches shall be all bronze and shall conform to MSS SP-80, Type 1, Class 150.

b. Valves 80 mm (3 inches) 3 inches and larger shall be iron body, bronze mounted. Flanges shall not be buried. An approved pit shall be provided for all flanged connections.

c. Resilient-Seated Gate Valves: For valves 80 to 300 mm (3 to 12 inches) 3 to 12 inches in size, resilient-seated gate valves shall conform to AWWA C509.

2.4.6 Indicator Post for Valves

Each valve shown on the drawings with the designation "P.I.V." shall be equipped with indicator post conforming to the requirements of NFPA 24. Operation shall be by a wrench which shall be attached to each post.

2.5 VALVE BOXES

Valve boxes shall be cast iron or concrete, except that concrete boxes may be installed only in locations not subjected to vehicular traffic. Cast-iron boxes shall be extension type with slide-type adjustment and with flared base. The minimum thickness of metal shall be 5 mm.3/16 inch. Concrete boxes shall be the standard product of a manufacturer of precast concrete equipment. The word "WATER" shall be cast in the cover. The box length shall adapt, without full extension, to the depth of cover required over the pipe at the valve location.

2.6 VALVE PITS

Valve pits shall be constructed at locations indicated or as required above and in accordance with the details shown. Concrete shall have compressive strength of 21 MPa 3000 psi.

2.7 FIRE HYDRANTS

Hydrants shall be dry-barrel type conforming to AWWA C502 with valve opening at least 125 mm (5 inches) 5 inches in diameter and designed so that the flange at the main valve seat can be removed with the main valve seat apparatus remaining intact, closed and reasonably tight against leakage and with a breakable valve rod coupling and breakable flange connections located no more than 200 mm 8 inches above the ground grade. Hydrants shall have a 150 mm (6 inch) 6 inch bell connection, two 65 mm (2-1/2 inch) 2-1/2 inch hose connections and one 115 mm (4-1/2 inch) 4-1/2 inch pumper connection. Outlets shall have American National Standard fire-hose coupling threads. Working parts shall be bronze. Design, material, and workmanship shall be equal to the latest stock pattern ordinarily produced by the manufacturer. Hydrants shall be painted with 1 coat of red iron oxide, zinc oxide primer conforming to SSPC Paint 25 and 2 finish coats of silicone alkyd paint conforming to SSPC Paint 21, of the installation's standard colors or as directed by the Contracting Officer. Suitable bronze adapter for the 115 mm (4-1/2 inch) 4-1/2 inch outlet, with caps, shall be furnished.

2.9 MISCELLANEOUS ITEMS

2.9.6 Service Boxes

Service boxes shall be cast iron or concrete and shall be extension service boxes of the length required for the depth of the line, with either screw or slide-type adjustment. The boxes shall have housings of sufficient size to completely cover the service stop or valve and shall be complete with identifying covers.

2.9.7 Disinfection

Chlorinating materials shall conform to the following:

Chlorine, Liquid: AWWA B301.

Hypochlorite, Calcium and Sodium: AWWA B300.

2.9.8 Meters

Meters are typically installed by the water utility provider. Contractor shall verify this to be true and contact utility provider for meter type and size.

2.10 METER VAULTS

Meter vaults are typically installed by the utility provider, if necessary. Contractor shall verify this to be true and contact utility provider for meter vault type and size.

PART 3 EXECUTION

3.1 INSTALLATION

3.1.1 Cutting of Pipe

Cutting of pipe shall be done in a neat and workmanlike manner without damage to the pipe. Unless otherwise recommended by the manufacturer and authorized by the Contracting Officer, cutting shall be done with an approved type mechanical cutter. Wheel cutter shall be used when practicable. Copper tubing shall be cut square and all burrs shall be removed. Squeeze type mechanical cutters shall not be used for ductile iron.

3.1.2 Adjacent Facilities

3.1.2.1 Sewer Lines

Where the location of the water pipe is not clearly defined in dimensions on the drawings, the water pipe shall not be laid closer horizontally than 3 m 10 feet from a sewer except where the bottom of the water pipe will be at least 300 mm 12 inches above the top of the sewer pipe, in which case the water pipe shall not be laid closer horizontally than 1.8 m 6 feet from the sewer. Where water lines cross under gravity-flow sewer lines, the sewer pipe, for a distance of at least 3 m 10 feet each side of the crossing, shall be fully encased in concrete or shall be made of pressure pipe with no joint located within 900 mm 3 feet horizontally of the crossing. Water lines shall in all cases cross above sewage force mains or inverted siphons and shall be not less than 600 mm 2 feet above the sewer main. Joints in the sewer main, closer horizontally than 900 mm 3 feet to the crossing, shall be encased in concrete.

3.1.2.2 Water Lines

Water lines shall not be laid in the same trench with sewer lines, gas lines, fuel lines, or electric wiring.

3.1.2.3 Copper Tubing Lines

Copper tubing shall not be installed in the same trench with ferrous piping materials.

3.1.2.4 Nonferrous Metallic Pipe

Where nonferrous metallic pipe, e.g. copper tubing, crosses any ferrous piping material, a minimum vertical separation of 300 mm 12 inchesshall be maintained between pipes.

3.1.3 Joint Deflection

3.1.3.2 Offset for Flexible Plastic Pipe

Maximum offset in alignment between adjacent pipe joints shall be as recommended by the manufacturer and approved by the Contracting Officer, but shall not exceed 5 degrees.

3.1.3.3 Allowable for Ductile-Iron Pipe

The maximum allowable deflection shall be as given in AWWA C600. If the alignment requires deflection in excess of the above limitations, special bends or a sufficient number of shorter lengths of pipe shall be furnished to provide angular deflections within the limit set forth.

3.1.4 Placing and Laying

Pipe and accessories shall be carefully lowered into the trench by means of derrick, ropes, belt slings, or other authorized equipment. Water-line materials shall not be dropped or dumped into the trench. Abrasion of the pipe coating shall be avoided. Except where necessary in making connections with other lines or as authorized by the Contracting Officer, pipe shall be laid with the bells facing in the direction of laying. The full length of each section of pipe shall rest solidly upon the pipe bed, with recesses excavated to accommodate bells, couplings, and joints. Pipe that has the grade or joint disturbed after laying shall be taken up and relaid. Pipe shall not be laid in water or when trench conditions are unsuitable for the work. Water shall be kept out of the trench until joints are complete. When work is not in progress, open ends of pipe, fittings, and valves shall be securely closed so that no trench water, earth, or other substance will enter the pipes or fittings. Where any part of the coating or lining is damaged, the repair shall be made by and at the Contractor's expense in a satisfactory manner. Pipe ends left for future connections shall be valved, plugged, or capped, and anchored, as shown.

3.1.4.2 Plastic Pipe Installation

RTRP shall be installed in accordance with ASTM D 3839. RPMP shall be installed in accordance with the manufacturer's recommendations. PE Pipe shall be installed in accordance with ASTM D 2774. PVC pipe shall be installed in accordance with AWWA M23.

3.1.4.3 Piping Connections

Where connections are made between new work and existing mains, the connections shall be made by using specials and fittings to suit the actual conditions. When made under pressure, these connections shall be installed using standard methods as approved by the Contracting Officer. Connections to existing asbestos-cement pipe shall be made in accordance with ACPPA 1344.

3.1.4.4 Penetrations

Pipe passing through walls of valve pits and structures shall be provided with ductile-iron or Schedule 40 steel wall sleeves. Annular space between walls and sleeves shall be filled with rich cement mortar. Annular space between pipe and sleeves shall be filled with mastic.

3.1.4.5 Flanged Pipe

Flanged pipe shall only be installed above ground or with the flanges in valve pits.

3.1.5 Jointing

3.1.5.2 PE Pipe Requirements

Jointing shall comply with ASTM D 2657, Technique I-Socket Fusion or Technique II-Butt Fusion.

3.1.5.3 PVC Plastic Pipe Requirements

a. Pipe less than 100 mm (4 inch) 4 inch diameter: Threaded joints shall be made by wrapping the male threads with approved thread tape or applying an approved lubricant, then threading the joining members together. The joint shall be tightened using strap wrenches to prevent damage to the pipe and/or fitting. To avoid excessive torque, joints shall be tightened no more than one thread past hand-tight. Preformed rubber-ring gaskets for elastomeric-gasket joints shall be made in accordance with ASTM F 477 and as specified. Pipe ends for push-on joints shall be beveled to facilitate assembly and marked to indicate when the pipe is fully seated. The gasket shall be prelubricated to prevent displacement. The gasket and ring groove in the bell or coupling shall match. The manufacturer of the pipe or fitting shall supply the elastomeric gasket. Couplings shall be provided with stops or centering rings to assure that the coupling is centered on the joint. Solvent cement joints shall use sockets conforming to ASTM D 2467. The solvent cement used shall meet the requirements of ASTM D 2564; the joint assembly shall be made in accordance with ASTM D 2855 and the manufacturer's specific recommendations.

b. Pipe 100 through 300 mm 4 through 12 inch diameter: Joints shall be elastomeric gasket as specified in AWWA C900. Jointing procedure shall be as specified for pipe less than 100 mm (4 inch) 4 inch diameter with configuration using elastomeric ring gasket.

3.1.5.5 Ductile-Iron Pipe Requirements

Mechanical and push-on type joints shall be installed in accordance with AWWA C600 for buried lines or AWWA C606 for grooved and shouldered pipe above ground or in pits.

3.1.5.8 Copper Tubing Requirements

Joints shall be made with flared fittings. The flared end tube shall be pulled tightly against the tapered part of the fitting by a nut which is part of the fitting, so there is metal-to-metal contact.

3.1.5.11 Transition Fittings

Connections between different types of pipe and accessories shall be made with transition fittings approved by the Contracting Officer.

3.1.6 Installation of Service Lines

Service lines shall include the pipeline connecting building piping to water distribution lines to the connections with the building service at a point approximately 1.5 m 5 feet outside the building where such building service exists. Where building services are not installed, the Contractor shall terminate the service lines approximately 1.5 m 5 feet from the site of the proposed building at a point designated by the Contracting Officer. Such service lines shall be closed with plugs or caps. All service stops and valves shall be provided with service boxes. Service lines shall be constructed in accordance with the following requirements:

3.1.6.1 Service Lines 50 mm (2 Inches) and Smaller

Service lines 50 mm (2 inches) 2 inches and smaller shall be connected to the main by a directly-tapped corporation stop or by a service clamp. A corporation stop and a copper gooseneck shall be provided with either type of connection. Maximum sizes for directly-tapped corporation stops and for outlets with service clamps shall be as in TABLE I. Where 2 or more gooseneck connections to the main are required for an individual service, such connections shall be made with standard branch connections. The total clear area of the branches shall be at least equal to the clear area of the service which they are to supply.

TABLE I. SIZE OF CORPORATION STOPS AND OUTLET

Pipe Size mm	Corporation Stops, mm For Ductile-Iron Pipe	Outlets w/Service Clamps, mm Single & Double Strap
80	--	25
100	25	25
150	32	40
200	40	50
250	40	50
300 & larger	50	50

TABLE I. SIZE OF CORPORATION STOPS AND OUTLET

Pipe Size Inches	Corporation Stops, Inches For Ductile-Iron Pipe	Outlets w/Service Clamps, Inches Single & Double Strap
3	--	1

TABLE I. SIZE OF CORPORATION STOPS AND OUTLET

Pipe Size Inches	Corporation Stops, Inches For Ductile-Iron Pipe	Outlets w/Service Clamps, Inches Single & Double Strap
4	1	1
6	1-1/4	1-1/2
8	1-1/2	2
10	1-1/2	2
12 & larger	2	2

NOTE:

a. Service lines 40 mm (1-1/2 inches) 1-1/2 inches and smaller shall have a service stop.

b. Service lines 50 mm (2 inches) 2 inches in size shall have a gate valve.

3.1.6.2 Service Lines Larger than 50 mm (2 Inches)

Service lines larger than 50 mm (2 inches) 2 inches shall be connected to the main by a tapped saddle, tapping sleeve and valve, service clamp or reducing tee, depending on the main diameter and the service line diameter, and shall have a gate valve. Lines 80 mm (3 inches) 3 inches and larger may use rubber-seated butterfly valves as specified above, or gate valves.

3.1.6.3 Service Lines for Sprinkler Supplies

Water service lines used to supply building sprinkler systems for fire protection shall be connected to the water distribution main in accordance with NFPA 24.

3.1.8 Setting of Fire Hydrants, Meters, Valves and Valve Boxes

3.1.8.1 Location of Fire Hydrants

Fire hydrants shall be located and installed as shown. Each hydrant shall be connected to the main with a 150 mm (6 inch) 6 inch branch line having at least as much cover as the distribution main. Hydrants shall be set plumb with pumper nozzle facing the roadway, with the center of the lowest outlet not less than 450 mm 18 inches above the finished surrounding grade, and the operating nut not more than 1.2 m 48 inches above the finished surrounding grade. Fire hydrants designated on the drawings as low profile shall have the lowest outlet not less than 450 mm 18 inches above the finished surrounding grade, the top of the hydrant not more than 600 mm 24 inches above the finished surrounding grade. Except where approved otherwise, the backfill around hydrants shall be thoroughly compacted to the finished grade immediately after installation to obtain beneficial use of the hydrant as soon as practicable. The hydrant shall be set upon a slab of concrete not less than 100 mm 4 inches thick and 400 mm 15 inches

square. Not less than 2 cubic meters 7 cubic feet of free-draining broken stone or gravel shall be placed around and beneath the waste opening of dry barrel hydrants to ensure drainage.

3.1.8.2 Location of Meters

Meters and meter boxes and/or vaults shall be installed at the locations shown on the drawings by the utility provider unless an alternate location has been approved by the Contracting Officer and utility provider.

3.1.8.3 Location of Valves

After delivery, valves, including those in hydrants, shall be drained to prevent freezing and shall have the interiors cleaned of all foreign matter before installation. Stuffing boxes shall be tightened and hydrants and valves shall be fully opened and fully closed to ensure that all parts are in working condition. Check, pressure reducing, vacuum, and air relief valves shall be installed in valve pits. Valves and valve boxes shall be installed where shown or specified, and shall be set plumb. Valve boxes shall be centered on the valves. Boxes shall be installed over each outside gate valve unless otherwise shown. Where feasible, valves shall be located outside the area of roads and streets. Earth fill shall be tamped around each valve box or pit to a distance of 1.2 m 4 feet on all sides of the box, or the undisturbed trench face if less than 1.2 m.4 feet.

3.1.8.4 Location of Service Boxes

Where water lines are located below paved streets having curbs, the boxes shall be installed directly back of the curbs. Where no curbing exists, service boxes shall be installed in accessible locations, beyond the limits of street surfacing, walks and driveways.

3.1.9 Tapped Tees and Crosses

Tapped tees and crosses shall be installed where shown.

3.1.10 Thrust Restraint

Plugs, caps, tees and bends deflecting 11.25 degrees or more, either vertically or horizontally, on waterlines 100 mm (4 inches) 4 inches in diameter or larger, and fire hydrants shall be provided with thrust restraints. Valves shall be securely anchored or shall be provided with thrust restraints to prevent movement. Thrust restraints shall be either thrust blocks or, for ductile-iron pipes, restrained joints.

3.1.10.1 Thrust Blocks

Thrust blocking shall be concrete of a mix not leaner than: 1 cement, 2-1/2 sand, 5 gravel; and having a compressive strength of not less than 14 MPa 2,000 psi after 28 days. Blocking shall be placed between solid ground and the hydrant or fitting to be anchored. Unless otherwise indicated or directed, the base and thrust bearing sides of thrust blocks shall be poured directly against undisturbed earth. The sides of thrust blocks not subject to thrust may be poured against forms. The area of bearing shall be as shown or as directed. Blocking shall be placed so that the fitting joints will be accessible for repair. Steel rods and clamps, protected by galvanizing or by coating with bituminous paint, shall be used to anchor

vertical down bends into gravity thrust blocks.

3.1.10.2 Restrained Joints

For ductile-iron pipe, restrained joints shall be designed by the Contractor or the pipe manufacturer in accordance with DIPRA TRD.

3.2 HYDROSTATIC TESTS

Where any section of a water line is provided with concrete thrust blocking for fittings or hydrants, the hydrostatic tests shall not be made until at least 5 days after installation of the concrete thrust blocking, unless otherwise approved.

3.2.1 Pressure Test

After the pipe is laid, the joints completed, fire hydrants permanently installed, and the trench partially backfilled leaving the joints exposed for examination, the newly laid piping or any valved section of piping shall, unless otherwise specified, be subjected for 1 hour to a hydrostatic pressure test of [1.38] [_____] MPa. 200 psi. Water supply lines designated on the drawings shall be subjected for 1 hour to a hydrostatic pressure test of [1.38] [_____] MPa. 200 psi. Each valve shall be opened and closed several times during the test. Exposed pipe, joints, fittings, hydrants, and valves shall be carefully examined during the partially open trench test. Joints showing visible leakage shall be replaced or remade as necessary. Cracked or defective pipe, joints, fittings, hydrants and valves discovered in consequence of this pressure test shall be removed and replaced with sound material, and the test shall be repeated until the test results are satisfactory. The requirement for the joints to remain exposed for the hydrostatic tests may be waived by the Contracting Officer when one or more of the following conditions is encountered:

a. Wet or unstable soil conditions in the trench.

b. Compliance would require maintaining barricades and walkways around and across an open trench in a heavily used area that would require continuous surveillance to assure safe conditions.

c. Maintaining the trench in an open condition would delay completion of the project.

The Contractor may request a waiver, setting forth in writing the reasons for the request and stating the alternative procedure proposed to comply with the required hydrostatic tests. Backfill placed prior to the tests shall be placed in accordance with the requirements of Section 02316 EXCAVATION, TRENCHING, AND BACKFILLING FOR UTILITIES SYSTEMS.

3.2.2 Leakage Test

Leakage test shall be conducted after the pressure tests have been satisfactorily completed. The duration of each leakage test shall be at least 2 hours, and during the test the water line shall be subjected to not less than [1.38] [_____] MPa 200 psi pressure. Water supply lines designated on the drawings shall be subjected to a pressure equal to [1.38] [_____] MPa. 200 psi. Leakage is defined as the quantity of water to be supplied into the newly laid pipe, or any valved or approved section,

necessary to maintain pressure within 34.5 kPa (5 psi) 5 psi of the specified leakage test pressure after the pipe has been filled with water and the air expelled. Piping installation will not be accepted if leakage exceeds the allowable leakage which is determined by the following formula:

L = 0.0001351ND(P raised to 0.5 power)

L = Allowable leakage in gallons per hour
N = Number of joints in the length of pipeline tested
D = Nominal diameter of the pipe in inches
P = Average test pressure during the leakage test, in psi gauge

Should any test of pipe disclose leakage greater than that calculated by the above formula, the defective joints shall be located and repaired until the leakage is within the specified allowance, without additional cost to the Government.

3.2.3 Time for Making Test

Except for joint material setting or where concrete thrust blocks necessitate a 5-day delay, pipelines jointed with rubber gaskets, mechanical or push-on joints, or couplings may be subjected to hydrostatic pressure, inspected, and tested for leakage at any time after partial completion of backfill. Cement-mortar lined pipe may be filled with water as recommended by the manufacturer before being subjected to the pressure test and subsequent leakage test.

3.2.4 Concurrent Hydrostatic Tests

The Contractor may elect to conduct the hydrostatic tests using either or both of the following procedures. Regardless of the sequence of tests employed, the results of pressure tests, leakage tests, and disinfection shall be as specified. Replacement, repair or retesting required shall be accomplished by the Contractor at no additional cost to the Government.

a. Pressure test and leakage test may be conducted concurrently.

b. Hydrostatic tests and disinfection may be conducted concurrently, using the water treated for disinfection to accomplish the hydrostatic tests. If water is lost when treated for disinfection and air is admitted to the unit being tested, or if any repair procedure results in contamination of the unit, disinfection shall be reaccomplished.

3.3 BACTERIALDISINFECTION

3.3.1 Bacteriological Disinfection

Before acceptance of potable water operation, each unit of completed waterline shall be disinfected as prescribed by AWWA C651. From several points in the unit, the Contracting Officer will take samples of water in proper sterilized containers for bacterial examination. The disinfection shall be repeated until tests indicate the absence of pollution for at least 2 full days. The unit will not be accepted until satisfactory bacteriological results have been obtained.

3.4 CLEANUP

Upon completion of the installation of water lines, and appurtenances, all debris and surplus materials resulting from the work shall be removed.

-- End of Section --

SECTION 02531

SANITARY SEWERS
07/03

PART 1 GENERAL

1.1 REFERENCES

The publications listed below form a part of this specification to the extent referenced. The publications are referred to in the text by the basic designation only.

AMERICAN CONCRETE PIPE ASSOCIATION (ACPA)

ACPA 01-102	(2000) Concrete Pipe Handbook
ACPA 01-103	(1999) Concrete Pipe Installation Manual

AMERICAN RAILWAY ENGINEERING AND MAINTENANCE-OF-WAY ASSOCIATION (AREMA)

AREMA 1-5	(2001; R 2002) Pipelines

ASTM INTERNATIONAL (ASTM)

ASTM A 123/A 123M	(2002) Zinc (Hot-Dip Galvanized) Coatings on Iron and Steel Products
ASTM A 307	(2002) Carbon Steel Bolts and Studs, 60 000 PSI Tensile Strength
ASTM A 47/A 47M	(1999) Ferritic Malleable Iron Castings
ASTM A 48/A 48M	(2000) Gray Iron Castings
ASTM A 536	(1984; R 1999el) Ductile Iron Castings
ASTM A 563	(2000) Carbon and Alloy Steel Nuts
ASTM A 563M	(2001) Carbon and Alloy Steel Nuts (Metric)
ASTM A 74	(1998) Cast Iron Soil Pipe and Fittings
ASTM A 746	(1999) Ductile Iron Gravity Sewer Pipe
ASTM C 12	(2002) Installing Vitrified Clay Pipe Lines
ASTM C 14	(1999) Concrete Sewer, Storm Drain, and Culvert Pipe
ASTM C 14M	(1999) Concrete Sewer, Storm Drain, and Culvert Pipe (Metric)
ASTM C 150	(2002a) Portland Cement

ASTM C 260	(2001) Air-Entraining Admixtures for Concrete
ASTM C 270	(2002) Mortar for Unit Masonry
ASTM C 33	(2002a) Concrete Aggregates
ASTM C 361	(1999) Reinforced Concrete Low-Head Pressure Pipe
ASTM C 361M	(1999) Reinforced Concrete Low-Head Pressure Pipe (Metric)
ASTM C 425	(2002) Compression Joints for Vitrified Clay Pipe and Fittings
ASTM C 443	(2002) Joints for Concrete Pipe and Manholes, Using Rubber Gaskets
ASTM C 443M	(2002) Joints for Concrete Pipe and Manholes, Using Rubber Gaskets (Metric)
ASTM C 478	(2002a) Precast Reinforced Concrete Manhole Sections
ASTM C 478M	(1997) Precast Reinforced Concrete Manhole Sections (Metric)
ASTM C 564	(1997) Rubber Gaskets for Cast Iron Soil Pipe and Fittings
ASTM C 700	(2002) Vitrified Clay Pipe, Extra Strength, Standard Strength, and Perforated
ASTM C 76	(2002) Reinforced Concrete Culvert, Storm Drain, and Sewer Pipe
ASTM C 76M	(2002) Reinforced Concrete Culvert, Storm Drain, and Sewer Pipe (Metric)
ASTM C 828	(2001) Low-Pressure Air Test of Vitrified Clay Pipe Lines
ASTM C 923	(2002) Resilient Connectors Between Reinforced Concrete Manhole Structures, Pipes and Laterals
ASTM C 923M	(2002) Resilient Connectors Between Reinforced Concrete Manhole Structures, Pipes and Laterals (Metric)
ASTM C 924	(2002) Testing Concrete Pipe Sewer Lines by Low-Pressure Air Test Method
ASTM C 924M	(2002) Testing Concrete Pipe Sewer Lines by Low-Pressure Air Test Method (Metric)

ASTM C 94/C 94M	(2000e2) Ready-Mixed Concrete
ASTM C 969	(2002) Infiltration and Exfiltration Acceptance Testing of Installed Precast Concrete Pipe Sewer Lines
ASTM C 969M	(2002) Infiltration and Exfiltration Acceptance Testing of Installed Precast Concrete Pipe Sewer Lines (Metric)
ASTM C 972	(2000) Compression-Recovery of Tape Sealant
ASTM C 990	(2001a) Joints for Concrete Pipe, Manholes, and Precast Box Sections Using Preformed Flexible Joint Sealers
ASTM C 990M	(2001a) Joints for Concrete Pipe, Manholes, and Precast Box Sections Using Preformed Flexible Joint Sealants (Metric)
ASTM D 1784	(1999ael) Rigid Poly(Vinyl Chloride) (PVC) Compounds and Chlorinated Poly(Vinyl Chloride) (CPVC) Compounds
ASTM D 1785	(1999) Poly(Vinyl Chloride) (PVC) Plastic Pipe, Schedules 40, 80, and 120
ASTM D 2235	(2001) Solvent Cement for Acrylonitrile-Butadiene-Styrene (ABS) Plastic Pipe and Fittings
ASTM D 2241	(2000) Poly(Vinyl Chloride) (PVC) Pressure-Rated Pipe (SDR Series)
ASTM D 2321	(2000) Underground Installation of Thermoplastic Pipe for Sewers and Other Gravity-Flow Applications
ASTM D 2412	(2002) Determination of External Loading Characteristics of Plastic Pipe by Parallel-Plate Loading
ASTM D 2464	(1999) Threaded Poly(Vinyl Chloride) (PVC) Plastic Pipe Fittings, Schedule 80
ASTM D 2466	(2002) Poly(Vinyl Chloride) (PVC) Plastic Pipe Fittings, Schedule 40
ASTM D 2467	(2002) Poly(Vinyl Chloride) (PVC) Plastic Pipe Fittings, Schedule 80
ASTM D 2680	(2001) Acrylonitrile-Butadiene-Styrene (ABS) and Poly(Vinyl Chloride) (PVC) Composite Sewer Piping
ASTM D 2751	(1996a) Acrylonitrile-Butadiene-Styrene (ABS) Sewer Pipe and Fittings

ASTM D 2996	(2001) Filament-Wound "Fiberglass" (Glass-Fiber-Reinforced Thermosetting-Resin) Pipe
ASTM D 2997	(2001) Centrifugally Cast "Fiberglass" (Glass-Fiber-Reinforced Thermosetting-Resin) Pipe
ASTM D 3034	(2000) Type PSM Poly(Vinyl Chloride) (PVC) Sewer Pipe and Fittings
ASTM D 3139	(1998) Joints for Plastic Pressure Pipes Using Flexible Elastomeric Seals
ASTM D 3212	(1996a) Joints for Drain and Sewer Plastic Pipes Using Flexible Elastomeric Seals
ASTM D 3262	(2001) "Fiberglass" (Glass-Fiber-Reinforced Thermosetting-Resin) Sewer Pipe
ASTM D 3350	(2002a) Polyethylene Plastics Pipe and Fittings Materials
ASTM D 3753	(1999) Glass-Fiber-Reinforced Polyester Manholes and Wet Wells
ASTM D 3840	(2001) "Fiberglass" (Glass-Fiber-Reinforced Thermosetting-Resin) Pipe Fittings for Nonpressure Applications
ASTM D 4101	(2002a) Propylene Injection and Extrusion Materials
ASTM D 412	(1998a) Vulcanized Rubber and Thermoplastic Rubbers and Thermoplastic Elastomers - Tension
ASTM D 4161	(2001) "Fiberglass" (Glass-Fiber-Reinforced Thermosetting-Resin) Pipe Joints Using Flexible Elastomeric Seals
ASTM D 624	(2000e1) Tear Strength of Conventional Vulcanized Rubber and Thermoplastic Elastomers
ASTM F 402	(1993; R 1999) Safe Handling of Solvent Cements, Primers, and Cleaners Used for Joining Thermoplastic Pipe and Fittings
ASTM F 405	(1997) Corrugated Polyethylene (PE) Tubing and Fittings
ASTM F 477	(2002el) Elastomeric Seals (Gaskets) for Joining Plastic Pipe

ASTM F 714	(2001) Polyethylene (PE) Plastic Pipe (SDR-PR) Based on Outside Diameter
ASTM F 758	(1995; R 2000) Smooth-Wall Poly(Vinyl Chloride) (PVC) Plastic Underdrain Systems for Highway, Airport, and Similar Drainage
ASTM F 794	(2001) Poly(Vinyl Chloride) (PVC) Profile Gravity Sewer Pipe and Fittings Based on Controlled Inside Diameter
ASTM F 894	(1998a) Polyethylene (PE) Large Diameter Profile Wall Sewer and Drain Pipe
ASTM F 949	(2001a) Poly(Vinyl Chloride) (PVC) Corrugated Sewer Pipe with a Smooth Interior and Fittings

AMERICAN WATER WORKS ASSOCIATION(AWWA)

AWWA C104	(1995) Cement-Mortar Lining for Ductile-Iron Pipe and Fittings for Water
AWWA C105	(1999) Polyethylene Encasement for Ductile-Iron Pipe Systems
AWWA C110	(1998) Ductile-Iron and Gray-Iron Fittings, 3 In. Through 48 In. (76 mm through 1219 mm), for Water
AWWA C111	(2000) Rubber-Gasket Joints for Ductile-Iron Pressure Pipe and Fittings
AWWA C115	(1999) Flanged Ductile-Iron Pipe with Ductile-Iron or Gray-Iron Threaded Flanges
AWWA C151	(2002) Ductile-Iron Pipe, Centrifugally Cast, for Water
AWWA C153	(2000) Ductile-Iron Compact Fittings for Water Service
AWWA C302	(1995) Reinforced Concrete Pressure Pipe, Noncylinder Type
AWWA C600	(1999) Installation of Ductile-Iron Water Mains and Their Appurtenances
AWWA C606	(1997) Grooved and Shouldered Joints
AWWA C900	(1997; C900a) Polyvinyl Chloride (PVC) Pressure Pipe, 4 In. Through 12 In., for Water Distribution
AWWA M23	(2002) Manual: PVC Pipe - Design and Installation

AWWA M9	(1995) Manual: Concrete Pressure Pipe

ASME INTERNATIONAL (ASME)

ASME B1.20.1	(1983; R 2001) Pipe Threads, General Purpose (Inch)
ASME B16.1	(1998) Cast Iron Pipe Flanges and Flanged Fittings
ASME B18.2.2	(1987; R 1999) Square and Hex Nuts
ASME B18.5.2.1M	(1981; R 1995) Metric Round Head Short Square Neck Bolts
ASME B18.5.2.2M	(1982; R 2000) Metric Round Head Square Neck Bolts

CAST IRON SOIL PIPE INSTITUTE (CISPI)

CISPI 301	(2000) Hubless Cast Iron Soil Pipe and Fittings for Sanitary and Storm Drain, Waste, and Vent Piping Applications
CISPI 310	(1997) Coupling for Use in Connection with Hubless Cast Iron Soil Pipe and Fittings for Sanitary and Storm Drain, Waste, and Vent Piping Applications

U.S. GENERAL SERVICES ADMINISTRATION (GSA)

FS A-A-60005	(Basic) Frames, Covers, Gratings, Steps, Sump and Catch Basin, Manhole

U.S. NATIONAL ARCHIVES AND RECORDS ADMINISTRATION (NARA)

29 CFR 1910.27	Fixed Ladders

UNI-BELL PVC PIPE ASSOCIATION (UBPPA)

UBPPA UNI-B-3	(1992) Recommended Practice for the Installation of Polyvinyl Chloride (PVC) Pressure Pipe (Nominal Diameters 4-36 Inch)
UBPPA UNI-B-6	(1998) Recommended Practice for the Low-Pressure Air Testing of Installed Sewer Pipe

1.2 SYSTEM DESCRIPTION

1.2.1 Sanitary Sewer Gravity Pipeline

Provide mains and laterals of ductile-iron pipe acrylonitrile-butadiene-styrene (ABS) composite plastic pipe or polyvinyl chloride (PVC) plastic pipe at the Contractor's option. Provide building connections of cast iron soil pipe acrylonitrile-butadiene-styrene (ABS) solid-wall plastic pipe or polyvinyl chloride (PVC) plastic pipe at the

Contractor's option.

1.2.2 Sanitary Sewer Pressure Lines

Provide pressure lines of ductile iron pressure pipe or polyvinyl chloride (PVC) plastic pressure pipe at the Contractor's option.

1.3 GENERAL REQUIREMENTS

The construction required herein shall include appurtenant structures and building sewers to points of connection with the building drains 1.5 m 5 feet outside the building to which the sewer system is to be connected. The Contractor shall replace damaged material and redo unacceptable work at no additional cost to the Government. Excavation and backfilling is specified in Section 02316A EXCAVATION, TRENCHING, AND BACKFILLING FOR UTILITIES SYSTEMS. Backfilling shall be accomplished after inspection by the Contracting Officer. Force mains and inverted siphons are specified in Section 02532A FORCE MAINS AND INVERTED SIPHONS; SEWER. Before, during, and after installation, plastic pipe and fittings shall be protected from any environment that would result in damage or deterioration to the material. The Contractor shall have a copy of the manufacturer's instructions available at the construction site at all times and shall follow these instructions unless directed otherwise by the Contracting Officer. Solvents, solvent compounds, lubricants, elastomeric gaskets, and any similar materials required to install the plastic pipe shall be stored in accordance with the manufacturer's recommendation and shall be discarded if the storage period exceeds the recommended shelf life. Solvents in use shall be discarded when the recommended pot life is exceeded.

1.4 SUBMITTALS

Government approval is required for submittals with a "G" designation; submittals not having a "G" designation are for information only or as otherwise designated. When used, a designation following the "G" designation identifies the office that will review the submittal for the Government. The following shall be submitted in accordance with Section 01330 SUBMITTAL PROCEDURES:

SD-03 Product Data

Pipeline materials

Submit manufacturer's standard drawings or catalog cuts.

1.5 DELIVERY, STORAGE, AND HANDLING

1.5.1 Delivery and Storage

1.5.1.1 Piping

Inspect materials delivered to site for damage; store with minimum of handling. Store materials on site in enclosures or under protective coverings. Store plastic piping and jointing materials and rubber gaskets under cover out of direct sunlight. Do not store materials directly on the ground. Keep inside of pipes and fittings free of dirt and debris.

1.5.1.2 Metal Items

Check upon arrival; identify and segregate as to types, functions, and sizes. Store off the ground in a manner affording easy accessibility and not causing excessive rusting or coating with grease or other objectionable materials.

1.5.2 Handling

Handle pipe, fittings, and other accessories in such manner as to ensure delivery to the trench in sound undamaged condition. Take special care not to damage linings of pipe and fittings; if lining is damaged, make satisfactory repairs. Carry, do not drag, pipe to trench.

PART 2 PRODUCTS

2.1 PIPELINE MATERIALS

Pipe shall conform to the respective specifications and other requirements specified below.

2.1.1 Cast-Iron Soil Piping

2.1.1.1 Cast-Iron Hub and Spigot Soil Pipe and Fittings

ASTM A 74, extra heavy, with ASTM C 564 compression-type rubber gaskets.

2.1.5 Ductile Iron Gravity Sewer Pipe and Associated Fittings

2.1.5.1 Ductile Iron Gravity Pipe and Fittings

Ductile iron pipe shall conform to ASTM A 746. Fittings shall conform to AWWA C110 or AWWA C153. Fittings with push-on joint ends shall conform to the same requirements as fittings with mechanical-joint ends, except that the bell design shall be modified, as approved by the Contracting Officer, for push-on joint. Fittings shall have strength at least equivalent to that of the pipe. Ends of pipe and fittings shall be suitable for the joints specified hereinafter. Pipe and fittings shall have cement-mortar lining conforming to AWWA C104, standard thickness.

2.1.5.2 Ductile Iron Gravity Joints and Jointing Materials

Pipe and fittings shall have push-on joints or mechanical joints, except as otherwise specified in this paragraph. Push-on joint pipe ends and fitting ends, gaskets, and lubricant for joint assembly shall conform to AWWA C111. Mechanical joint requirements for pipe ends, glands, bolts and nuts, and gaskets shall conform to AWWA C111.

2.1.6 Ductile Iron Pressure Piping

2.1.6.1 Ductile Iron Pressure Pipe and Fittings

Ductile-iron pipe shall conform to AWWA C151. Flanged pipe shall conform to AWWA C115. Fittings shall conform to AWWA C110 or AWWA C153. Fittings with push-on joint ends shall conform to the same requirements as fittings with mechanical-joint ends, except that the bell design shall be modified, as approved, for push-on joint. Fittings shall have pressure rating at least equivalent to that of the pipe. Ends of pipe and fittings shall be suitable for the joints specified hereinafter. Pipe and fittings shall

have cement-mortar lining conforming to AWWA C104, standard thickness.

2.1.6.2 Ductile Iron Pressure Joints and Jointing Materials

a. Joints, general: Joints for pipe and fittings shall be push-on joints or mechanical joints except as otherwise specified in this paragraph. Joints made with sleeve-type mechanical coupling may be used in lieu of push-on joint.

b. Push-on joints: Shape of pipe ends and fitting ends, gaskets, and lubricant for joint assembly shall conform to AWWA C111.

c. Mechanical joints: Dimensional and material requirements for pipe ends, glands, bolts and nuts, and gaskets shall conform to AWWA C111.

d. Flanged joints: Bolts, nuts, and gaskets for flanged connections shall be as recommended in the Appendix to AWWA C115. Flange for setscrewed flanges shall be of ductile iron, ASTM A 536, Grade 65-45-12, and shall conform to the applicable requirements of ASME B16.1, Class 250. Setscrews for setscrewed flanges shall be 1310 MPa 190,000 psi tensile strength, heat treated, and zinc-coated steel. Gasket for setscrewed flanges shall conform to the applicable requirements for mechanical-joint gaskets specified in AWWA C111. Design of setscrewed gasket shall provide for confinement and compression of gasket when joint to adjoining flange is made.

e. Joints made with sleeve-type mechanical couplings: Couplings shall be designed to couple plain-end piping by compression of a ring gasket at each end of the adjoining pipe sections. The coupling shall consist of one middle ring flared or beveled at each end to provide a gasket seat, two follower rings, two resilient tapered rubber gaskets, and bolts and nuts to draw the follower rings toward each other to compress the gaskets. The middle ring and the follower rings shall be true circular sections free from irregularities, flat spots, and surface defects; the design shall provide for confinement and compression of the gaskets. Middle ring shall be of cast-iron or steel, and the follower rings shall be of malleable iron or ductile iron. Cast iron shall conform to ASTM A 48/A 48M and shall be not less than Class 25. Malleable iron shall conform to ASTM A 47/A 47M. Ductile iron shall conform to ASTM A 536. Steel shall have a strength not less than that of the pipe. Gaskets shall be designed for long life and resistance to set after installation and shall meet the applicable requirements specified for gaskets for mechanical joint in AWWA C111. Bolts shall be track-head type; bolts and nuts shall be either of the following: bolts conforming to the tensile requirements of ASTM A 307, Grade A, with nuts conforming to the tensile requirements of ASTM A 563M ASTM A 563, Grade A; or round-head square-neck type bolts conforming to ASME B18.5.2.1M and ASME B18.5.2.2M with hex nuts conforming to ASME B18.2.2. Bolts shall be 16 mm 5/8 inch in diameter; minimum number of bolts for each coupling shall be 3 for 3 mm inch pipe and 4 for 4 mm inch pipe. Bolt holes in follower rings shall be of a shape to hold fast the necks of the bolts used. Sleeve-type mechanical couplings shall not be used as an optional method of jointing except where pipeline is adequately anchored to resist

tension pull across the joint.

2.1.7 ABS Composite Plastic Piping

2.1.7.1 ABS Composite Plastic Pipe and Fittings

ASTM D 2680.

2.1.7.2 Jointing Materials for ABS Composite Plastic Piping

Solvent cement and primer shall conform to ASTM D 2680.

2.1.8 ABS Solid-Wall Plastic Piping

2.1.8.1 ABS Solid-Wall Plastic Pipe and Fittings

ASTM D 2751, SDR 35, with ends suitable for either solvent cement joints or elastomer joints.

2.1.8.2 ABS Solid-Wall Plastic Joints and Jointing Materials

Solvent cement for solvent cement joints shall conform to ASTM D 2235. Elastomeric joints shall conform to ASTM D 3212. Gaskets for elastomeric joints shall conform to ASTM F 477.

2.1.9 PVC Plastic Gravity Sewer Piping

2.1.9.1 PVC Plastic Gravity Pipe and Fittings

ASTM D 3034, SDR 35, or ASTM F 949 with ends suitable for elastomeric gasket joints.

2.1.9.2 PVC Plastic Gravity Joints and Jointing Material

Joints shall conform to ASTM D 3212. Gaskets shall conform to ASTM F 477.

2.1.10 PVC Plastic Pressure Pipe and Associated Fittings

2.1.10.1 PVC Plastic Pressure Pipe and Fittings

a. Pipe and Fittings Less Than 100 mm 4 inch Diameter: Pipe, couplings and fittings shall be manufactured of materials conforming to ASTM D 1784, Class 12454B.

(1) Screw-Joint: Pipe shall conform to dimensional requirements of ASTM D 1785, Schedule 80, with joints meeting requirements of 1.03 Mpa 150 psi working pressure, 1.38 Mpa 200 psihydrostatic test pressure, unless otherwise shown or specified. Fittings for threaded pipe shall conform to requirements of ASTM D 2464, threaded to conform to the requirements of ASME B1.20.1 for use with Schedule 80 pipe and fittings. Pipe couplings when used, shall be tested as required by ASTM D 2464.

(2) Push-On Joint: ASTM D 3139, with ASTM F 477 gaskets. Fittings for push-on joints shall be iron conforming to AWWA C110 or AWWA C111. Iron fittings and specials shall shall be cement-mortar lined (standard thickness) in accordance with AWWA

C104.

(3) Solvent Cement Joint: Pipe shall conform to dimensional requirements of ASTM D 1785 or ASTM D 2241 with joints meeting the requirements of 1.03 Mpa 150 psiworking pressure and 1.38 Mpa 200 psi hydrostatic test pressure. Fittings for solvent cement jointing shall conform to ASTM D 2466 or ASTM D 2467.

b. Pipe and Fittings 100 mm 4 inch Diameter to 300 mm 12 inch: Pipe shall conform to AWWA C900 and shall be plain end or gasket bell end, Pressure Class 150 (DR 18), with cast-iron-pipe-equivalent OD. Fittings shall be gray-iron or ductile-iron conforming to AWWA C110 or AWWA C153 and shall have cement-mortar lining conforming to AWWA C104, standard thickness. Fittings with push-on joint ends shall conform to the same requirements as fittings with mechanical-joint ends, except that bell design shall be modified, as approved, for push-on joint suitable for use with the PVC plastic pressure pipe specified in this paragraph.

2.1.10.2 PVC Plastic Pressure Joints and Jointing Material

Joints for pipe, 100 mm 4 inch to 300 mm 12 inch diameter, shall be push-on joints as specified in ASTM D 3139. Joints between pipe and fittings shall be push-on joints as specified in ASTM D 3139 or shall be compression-type joints/mechanical-joints as respectively specified in ASTM D 3139 and AWWA C111. Each joint connection shall be provided with an elastomeric gasket suitable for the bell or coupling with which it is to be used. Gaskets for push-on joints for pipe shall conform to ASTM F 477. Gaskets for push-on joints and compression-type joints/mechanical-joints for joint connections between pipe and fittings shall be as specified in AWWA C111, respectively, for push-on joints and mechanical-joints.

2.1.11 High Density Polyethylene Pipe

450 mm (18 inch)3000 mm (120 inch).ASTM F 714, size100 mm (4 inch)) 4 inch through1200 mm (48 inch). 48 inch. The polyethylene shall be certified by the resin producer as meeting the requirements of ASTM D 3350, cell Class 334433C. The pipe stiffness shall be greater than or equal to 1170/D for cohesionless material pipe trench backfills. Fittings for High Density Polyethylene Pipe: ASTM F 894. Joints for high density polyethylene pipe: Rubber gasket joints shall conform to ASTM C 443M ASTM C 443.

PART 3 EXECUTION

3.1 INSTALLATION OF PIPELINES AND APPURTENANT CONSTRUCTION

3.1.1 General Requirements for Installation of Pipelines

Apply except where specific exception is made in the following paragraphs entitled "Special Requirements."

3.1.1.1 Location

The work covered by this section shall terminate at a point approximately 1.5 m 5 feet from the building, unless otherwise indicated. Where the location of the sewer is not clearly defined by dimensions on the drawings, do not lay sewer line closer horizontally than 3 m 10 feet to a water main

or service line. Install pressure sewer lines beneath water lines only, with the top of the sewer line being at least 0.60 m 2 feet below bottom of water line.

a. Sanitary piping installation parallel with water line:

(1) Normal conditions: Sanitary piping or manholes shall be laid at least 3 m 10 feet horizontally from a water line whenever possible. The distance shall be measured edge-to-edge.

(2) Unusual conditions: When local conditions prevent a horizontal separation of 3 m 10 feet, the sanitary piping or manhole may be laid closer to a water line provided that:

(a) The top (crown) of the sanitary piping shall be at least 450 mm 18 inches below the bottom (invert) of the water main.

(b) Where this vertical separation cannot be obtained, the sanitary piping shall be constructed of AWWA-approved ductile iron water pipe pressure tested in place without leakage prior to backfilling.

(c) The sewer manhole shall be of watertight construction and tested in place.

3.1.1.2 Earthwork

Perform earthwork operations in accordance with Section 02316A, "Excavation, Trenching, and Backfilling for Utilities Systems".

3.1.1.3 Pipe Laying and Jointing

Inspect each pipe and fitting before and after installation; replace those found defective and remove from site. Provide proper facilities for lowering sections of pipe into trenches. Lay nonpressure pipe with the bell ends in the upgrade direction. Adjust spigots in bells to give a uniform space all around. Blocking or wedging between bells and spigots will not be permitted. Replace by one of the proper dimensions, pipe or fittings that do not allow sufficient space for installation of joint material. At the end of each work day, close open ends of pipe temporarily with wood blocks or bulkheads. Provide batterboards not more than 7.50 m 25 feet apart in trenches for checking and ensuring that pipe invert elevations are as indicated. Laser beam method may be used in lieu of batterboards for the same purpose.

Branch connections shall be made by use of regular fittings or solvent cemented saddles as approved. Saddles for ABS and PVC composite pipe shall conform to Figure 2 of ASTM D 2680; saddles for ABS pipe shall comply with Table 3 of ASTM D 2751; and saddles for PVC pipe shall conform to Table 4 of ASTM D 3034.

3.1.1.4 Connections to Existing Lines

Obtain approval from the Contracting Officer before making connection to existing line. Conduct work so that there is minimum interruption of service on existing line.

3.1.2 Special Requirements

3.1.2.1 Installation of Cast Iron Soil Piping

Unless otherwise specified, install pipe and fittings in accordance with paragraph entitled "General Requirements for Installation of Pipelines" of this section and with the recommendations of the pipe manufacturer. Make joints with the rubber gaskets specified for cast iron soil pipe joints and assemble in accordance with the recommendations of the pipe manufacturer.

3.1.2.5 Installation of Ductile Iron Gravity Sewer Pipe

Unless otherwise specified, install pipe and associated fittings in accordance with paragraph entitled "General Requirements for Installation of Pipelines" of this section and with the requirements of AWWA C600 for pipe installation and joint assembly.

a. Make push-on joints with the gaskets and lubricant specified for this type joint and assemble in accordance with the applicable requirements of AWWA C600 for joint assembly. Make mechanical-joints with the gaskets, glands, bolts, and nuts specified for this type joint and assemble in accordance with the applicable requirements of AWWA C600 for joint assembly and the recommendations of Appendix A to AWWA C111.

3.1.2.6 Installation of Ductile-Iron Pressure Lines

Unless otherwise specified, install pipe and fittings in accordance with paragraph entitled "General Requirements for Installation of Pipelines" of this section and with the requirements of AWWA C600 for pipe installation, joint assembly, and valve-and-fitting installation.

a. Make push-on joints with the gaskets and lubricant specified for this type joint and assemble in accordance with the applicable requirements of AWWA C600 for joint assembly. Make mechanical-joints with the gaskets, glands, bolts, and nuts specified for this type joint; assemble in accordance with the applicable requirements of AWWA C600 for joint assembly and the recommendations of Appendix A to AWWA C111. Make flanged joints with gaskets, bolts, and nuts specified for this type joint. Make flanged joints up tight, taking care to avoid undue strain on flanges, fittings, and other accessories. Align bolt holes for each flanged joint. Use full size bolts for the bolt holes; use of undersized bolts to make up for misalignment of bolt holes or for any other purpose will not be permitted. Do not allow adjoining flange faces to be out of parallel to such degree that the flanged joint cannot be made watertight without overstraining the flange. When flanged pipe or fittings have dimensions that do not allow the making of a proper flanged joint as specified, replace it by one of proper dimensions. Assemble joints made with sleeve-type mechanical couplings in accordance with the recommendations of the coupling manufacturer, as approved.

b. Pipe anchorage: Provide concrete thrust blocks (reaction backing) for pipe anchorage. Size and position thrust blocks as indicated. Use concrete conforming to ASTM C 94/C 94M having a minimum compressive strength of 13.80 MPa 2,000 psi at 28 days; or use concrete of a mix not leaner than one part cement, 2 1/2 parts

sand, and 5 parts gravel, having the same minimum compressive strength.

3.1.2.7 Installation of ABS Composite Plastic Piping

Install pipe and fittings in accordance with paragraph entitled "General Requirements for Installation of Pipelines" of this section and with the recommendations of the plastic pipe manufacturer. Make joints with the primer and solvent cement specified for this joint and assemble in accordance with the recommendations of the pipe manufacturer. Handle solvent cement in accordance with ASTM F 402.

3.1.2.8 Installation of ABS Solid-Wall Plastic Piping

Install pipe and fittings in accordance with paragraph entitled "General Requirements for Installation of Pipelines" of this section and with the recommendations of the plastic pipe manufacturer. Make solvent cement joints with the solvent cement previously specified for this type joint. Make elastomeric joints with the gaskets specified for this type joint and assemble in accordance with the recommendations of the pipe manufacturer. Handle solvent cement in accordance with ASTM F 402.

3.1.2.9 Installation of PVC Plastic Piping

Install pipe and fittings in accordance with paragraph entitled "General Requirements for Installation of Pipelines" of this section and with the requirements of ASTM D 2321 for laying and joining pipe and fittings. Make joints with the gaskets specified for joints with this piping and assemble in accordance with the requirements of ASTM D 2321 for assembly of joints. Make joints to other pipe materials in accordance with the recommendations of the plastic pipe manufacturer.

3.1.2.10 Installation of PVC Plastic Pressure Pipe and Fittings

Unless otherwise specified, install pipe and fittings in accordance with paragraph entitled "General Requirements for Installation of Pipelines" of this section; with the requirements of UBPPA UNI-B-3 for laying of pipe, joining PVC pipe to fittings and accessories, and setting of hydrants, valves, and fittings; and with the recommendations for pipe joint assembly and appurtenance installation in AWWA M23, Chapter 7, "Installation."

a. Pipe Less Than 100 mm 4 Inch Diameter:

(1) Threaded joints shall be made by wrapping the male threads with joint tape or by applying an approved thread lubricant, then threading the joining members together. The joints shall be tightened with strap wrenches which will not damage the pipe and fittings. The joint shall be tightened no more than 2 threads past hand-tight.

(2) Push-On Joints: The ends of pipe for push-on joints shall be beveled to facilitate assembly. Pipe shall be marked to indicate when the pipe is fully seated. The gasket shall be lubricated to prevent displacement. Care shall be exercised to ensure that the gasket remains in proper position in the bell or coupling while making the joint.

(3) Solvent-weld joints shall comply with the manufacturer's instructions.

b. Pipe 100 mm 4 Inch Diameter Joints: Make push-on joints with the elastomeric gaskets specified for this type joint, using either elastomeric-gasket bell-end pipe or elastomeric-gasket couplings. For pipe-to-pipe push-on joint connections, use only pipe with push-on joint ends having factory-made bevel; for push-on joint connections to fittings, cut spigot end of pipe off square and re-bevel pipe end to a bevel approximately the same as that on ductile-iron pipe used for the same type of joint. Use an approved lubricant recommended by the pipe manufacturer for push-on joints. Assemble push-on joints for pipe-to-pipe joint connections in accordance with the requirements of UBPPA UNI-B-3 for laying the pipe and the recommendations in AWWA M23, Chapter 7, "Installation," for pipe joint assembly. Assemble push-on joints for connection to fittings in accordance with the requirements of UBPPA UNI-B-3 for joining PVC pipe to fittings and accessories and with the applicable requirements of AWWA C600 for joint assembly. Make compression-type joints/mechanical-joints with the gaskets, glands, bolts, nuts, and internal stiffeners specified for this type joint and assemble in accordance with the requirements of UBPPA UNI-B-3 for joining PVC pipe to fittings and accessories, with the applicable requirements of AWWA C600 for joint assembly, and with the recommendations of Appendix A to AWWA C111. Cut off spigot end of pipe for compression-type joint/mechanical-joint connections and do not re-bevel.

c. Pipe anchorage: Provide concrete thrust blocks (reaction backing) for pipe anchorage. Size and position thrust blocks as indicated. Use concrete conforming to ASTM C 94/C 94M having a minimum compressive strength of 13.80 MPa 2,000 psi at 28 days; or use concrete of a mix not leaner than one part cement, 2 1/2 parts sand, and 5 parts gravel, having the same minimum compressive strength.

3.1.3 Concrete Work

3.1.5 Miscellaneous Construction and Installation

3.1.5.1 Connecting to Existing Manholes

Pipe connections to existing manholes shall be made so that finish work will conform as nearly as practicable to the applicable requirements specified for new manholes, including all necessary concrete work, cutting, and shaping. The connection shall be centered on the manhole. Holes for the new pipe shall be of sufficient diameter to allow packing cement mortar around the entire periphery of the pipe but no larger than 1.5 times the diameter of the pipe. Cutting the manhole shall be done in a manner that will cause the least damage to the walls.

3.1.5.2 Metal Work

a. Workmanship and finish: Perform metal work so that workmanship and finish will be equal to the best practice in modern structural shops and foundries. Form iron to shape and size with sharp lines and angles. Do shearing and punching so that clean true lines and surfaces are produced. Make castings sound and free from warp,

cold shuts, and blow holes that may impair their strength or appearance. Give exposed surfaces a smooth finish with sharp well-defined lines and arises. Provide necessary rabbets, lugs, and brackets wherever necessary for fitting and support.

3.1.7 Installations of Wye Branches

Cutting into piping for connections shall not be done except in special approved cases. When the connecting pipe cannot be adequately supported on undisturbed earth or tamped backfill, the pipe shall be encased in concrete backfill or supported on a concrete cradle as directed. Concrete required because of conditions resulting from faulty construction methods or negligence by the Contractor shall be installed at no additional cost to the Government. The installation of wye branches in an existing sewer shall be made by a method which does not damage the integrity of the existing sewer. One acceptable method consists of removing one pipe section, breaking off the upper half of the bell of the next lower section and half of the running bell of wye section. After placing the new section, it shall be rotated so that the broken half of the bell will be at the bottom. The two joints shall then be made with joint packing and cement mortar.

3.2 FIELD QUALITY CONTROL

3.2.1 Field Tests and Inspections

The Contracting Officer will conduct field inspections and witness field tests specified in this section. The Contractor shall perform field tests and provide labor, equipment, and incidentals required for testing. Be able to produce evidence, when required, that each item of work has been constructed in accordance with the drawings and specifications.

3.2.2 Tests for Nonpressure Lines

Check each straight run of pipeline for gross deficiencies by holding a light in a manhole; it shall show a practically full circle of light through the pipeline when viewed from the adjoining end of line. When pressure piping is used in a nonpressure line for nonpressure use, test this piping as specified for nonpressure pipe.

3.2.2.1 Leakage Tests

Test lines for leakage by either infiltration tests or exfiltration tests, or by low-pressure air tests. Prior to testing for leakage, backfill trench up to at least lower half of pipe. When necessary to prevent pipeline movement during testing, place additional backfill around pipe sufficient to prevent movement, but leaving joints uncovered to permit inspection. When leakage or pressure drop exceeds the allowable amount specified, make satisfactory correction and retest pipeline section in the same manner. Correct visible leaks regardless of leakage test results.

a. Infiltration tests and exfiltration tests: Perform these tests for sewer lines made of the specified materials, not only concrete, in accordance with ASTM C 969M ASTM C 969. Make calculations in accordance with the Appendix to ASTM C 969M ASTM C 969.

b. Low-pressure air tests: Perform tests as follows:

(1) Ductile-iron pipelines: Test in accordance with the applicable requirements of ASTM C 924M ASTM C 924. Allowable pressure drop shall be as given in ASTM C 924M ASTM C 924. Make calculations in accordance with the Appendix to ASTM C 924M ASTM C 924.

(2) ABS composite plastic pipelines: Test in accordance with the applicable requirements of UBPPA UNI-B-6. Allowable pressure drop shall be as given in UBPPA UNI-B-6. Make calculations in accordance with the Appendix to UBPPA UNI-B-6.

(3) PVC plastic pipelines: Test in accordance with UBPPA UNI-B-6. Allowable pressure drop shall be as given in UBPPA UNI-B-6. Make calculations in accordance with the Appendix to UBPPA UNI-B-6.

3.2.3 Tests for Pressure Lines

Test pressure lines in accordance with the applicable standard specified in this paragraph, except for test pressures. For hydrostatic pressure test, use a hydrostatic pressure 345 kPa 50 psi in excess of the maximum working pressure of the system, but not less than 690 kPa 100 psi, holding the pressure for a period of not less than one hour. For leakage test, use a hydrostatic pressure not less than the maximum working pressure of the system. Leakage test may be performed at the same time and at the same test pressure as the pressure test. Test ductile-iron pressure lines in accordance with the requirements of AWWA C600 for hydrostatic testing. Leakage on ductile-iron pipelines with mechanical-joints or push-on joints shall not exceed the amounts given in AWWA C600; allow no leakage at joints made by other methods. Test PVC plastic pressure lines in accordance with the requirements of UBPPA UNI-B-3 for pressure and leakage tests, using the allowable leakage given therein.

-- End of Section --

SECTION 02532A

FORCE MAINS AND INVERTED SIPHONS; SEWER
07/98

PART 1 GENERAL

1.1 REFERENCES

The publications listed below form a part of this specification to the extent referenced. The publications are referred to in the text by basic designation only.

AMERICAN PETROLEUM INSTITUTE (API)

API Spec 6D	(1994; Supple 1 Jun 1996; Supple 2 Dec 1997) Pipeline Valves (Gate, Plug, Ball, and Check Valves)

AMERICAN SOCIETY FOR TESTING AND MATERIALS (ASTM)

ASTM A 53	(1999b) Pipe, Steel, Black and Hot-Dipped, Zinc-Coated, Welded and Seamless
ASTM C 478	(2002a) Precast Reinforced Concrete Manhole Sections
ASTM C 478M	(1997) Precast Reinforced Concrete Manhole Sections (Metric)
ASTM D 1784	(1999ael) Rigid Poly(Vinyl Chloride) (PVC) Compounds and Chlorinated Poly(Vinyl Chloride) (CPVC) Compounds
ASTM D 1785	(1999) Poly(Vinyl Chloride) (PVC) Plastic Pipe, Schedules 40, 80, and 120
ASTM D 2122	(1998) Determining Dimensions of Thermoplastic Pipe and Fittings
ASTM D 2241	(2000) Poly(Vinyl Chloride) (PVC) Pressure-Rated Pipe (SDR Series)
ASTM D 2464	(1999) Threaded Poly(Vinyl Chloride) (PVC) Plastic Pipe Fittings, Schedule 80
ASTM D 2564	(1996a) Solvent Cements for Poly(Vinyl Chloride) (PVC) Plastic Piping Systems
ASTM D 2657	(1997) Heat Fusion Joining Polyolefin Pipe and Fittings
ASTM D 2774	(1994) Underground Installation of Thermoplastic Pressure Piping

ASTM D 2996	(1995) Filament-Wound "Fiberglass" (Glass-Fiber-Reinforced Thermosetting-Resin) Pipe
ASTM D 3035	(1995) Polyethylene (PE) Plastic Pipe (DR-PR) Based on Controlled Outside Diameter
ASTM D 3139	(1998) Joints for Plastic Pressure Pipes Using Flexible Elastomeric Seals
ASTM D 3308	(1997) PTFE Resin Skived Tape
ASTM D 3350	(2002a) Polyethylene Plastics Pipe and Fittings Materials
ASTM D 3754	(1996) "Fiberglass" (Glass-Fiber-Reinforced Thermosetting-Resin) Sewer and Industrial Pressure Pipe
ASTM D 4101	(1999) Propylene Plastic Injection and Extrusion Materials
ASTM D 4161	(1996) "Fiberglass" (Glass-Fiber-Reinforced Thermosetting Resin) Pipe Joints Using Flexible Elastomeric Seals
ASTM F 477	(2002el) Elastomeric Seals (Gaskets) for Joining Plastic Pipe
ASTM F 1483	(1998) Oriented Poly(Vinyl Chloride), PVCO, Pressure Pipe

ASME INTERNATIONAL (ASME)

ASME B16.1	(1998) Cast Iron Pipe Flanges and Flanged Fittings
ASME B16.3	(1992) Malleable Iron Threaded Fittings

AMERICAN WATER WORKS ASSOCIATION (AWWA)

AWWA C105	(1993) Polyethylene Encasement for Ductile-Iron Pipe Systems
AWWA C110	(1998) Ductile-Iron and Gray-Iron Fittings, 3 In. Through 48 In. (76 mm through 1219 mm), for Water
AWWA C111	(2000) Rubber-Gasket Joints for Ductile-Iron Pressure Pipe and Fittings
AWWA C115	(1999) Flanged Ductile-Iron Pipe with Ductile-Iron or Gray-Iron Threaded Flanges

AWWA C151	(2002) Ductile-Iron Pipe, Centrifugally Cast, for Water
AWWA C200	(1997) Steel Water Pipe - 6 In. (150 mm) and Larger
AWWA C203	(1997) Coal-Tar Protective Coatings and Linings for Steel Water Pipelines - Enamel and Tape - Hot-Applied
AWWA C207	(1994) Steel Pipe Flanges for Waterworks Service - Sizes 4 In. Through 144 In. (100 mm through 3,600 mm)
AWWA C208	(1996) Dimensions for Fabricated Steel Water Pipe Fittings
AWWA C210	(1997) Liquid-Epoxy Coating Systems for the Interior and Exterior of Steel Water Pipelines
AWWA C300	(1997) Reinforced Concrete Pressure Pipe, Steel-Cylinder Type, for Water and Other Liquids
AWWA C301	(1992) Prestressed Concrete Pressure Pipe, Steel-Cylinder Type, for Water and Other Liquids
AWWA C303	(1995) Concrete Pressure Pipe, Bar-Wrapped, Steel-Cylinder Type
AWWA C500	(1993; C500a) Metal-Seated Gate Valves for Water Supply Service
AWWA C508	(1993; C508a) Swing-Check Valves for Waterworks Service, 2 In. (50 mm) Through 24 In. (600 mm) NPS
AWWA C600	(1999) Installation of Ductile-Iron Water Mains and Their Appurtenances
AWWA C900	(1997; C900a) Polyvinyl Chloride (PVC) Pressure Pipe, 4 In. Through 12 In., for Water Distribution
AWWA C909	(1998) Molecularly Oriented Polyvinyl Chloride (PVCO) Pressure Pipe, 4 IN through 12 IN (100 mm through 300 mm), for Water Distribution

DUCTILE IRON PIPE RESEARCH ASSOCIATION (DIPRA)

DIPRA TRD	(1997) Thrust Restraint Design for Ductile Iron Pipe

MANUFACTURERS STANDARDIZATION SOCIETY OF THE VALVE AND FITTINGS

INDUSTRY (MSS)

MSS SP-78 (1998) Cast Iron Plug Valves, Flanged and Threaded Ends

1.2 SUBMITTALS

Government approval is required for submittals with a "G" designation; submittals not having a "G" designation are for information only. When used, a designation following the "G" designation identifies the office that will review the submittal for the Government. The following shall be submitted in accordance with Section 01330 SUBMITTAL PROCEDURES:

SD-06 Test Reports

Hydrostatic Tests

Copies of test results.

1.3 DELIVERY AND STORAGE

Pipe, fittings and accessories, and pipe coatings shall not be damaged during delivery, handling, and storage.

PART 2 PRODUCTS

2.1 PIPE AND FITTINGS

Piping for force mains less than 100 mm (4 inches) 4 inches in diameter shall be galvanized steel, polyvinyl chloride (PVC) plastic, polyethylene (PE) plastic or polypropylene plastic. Piping less than 100 mm (4 inches) 4 inches in diameter inside pump stations shall be galvanized steel. Piping for force mains and inverted siphons 100 mm (4 inches) 4 inches in diameter and larger shall be ductile iron, steel, concrete pressure pipe, PVC plastic, Oriented PVC PE plastic, or reinforced thermosetting resin pipe (RTRP). Piping 200 mm (8 inches) 8 inches in diameter and larger may also be reinforced plastic mortar pressure (RPMP) pipe. Piping 100 mm (4 inches) 4 inches in diameter and larger inside pump stations shall be ductile iron pipe with bolted flange joints. Pipe shall conform to the respective specifications and other requirements specified below.

2.1.1 Concrete Pressure Pipe

Concrete pressure pipe and fittings shall conform to AWWA C303, as applicable for the service requirements, with rubber gasket joints of the type using steel bell and spigot joint rings.

2.1.2 Plastic Pipe

2.1.2.1 PE Pipe

ASTM D 3350 and ASTM D 3035, minimum pressure rating of 689 kPa (100 psi) 100 psi at23 degrees C (73.4 degrees F). 73.4 degrees F.

2.1.2.2 Polypropylene Pipe

ASTM D 2122 and ASTM D 4101.

2.1.2.3 PVC Pipe

a. PVC Pipe and Fittings Less Than 100 mm (4 inches) 4 inches Diameter: ASTM D 1785, Schedule 80, or ASTM D 2241, SDR 26, with screw joints, push-on joints, or solvent weld joints.

b. PVC Pipe and Fittings 100 mm (4 inches) 4 inches Diameter and Larger: ASTM D 2241, SDR 32.5, or AWWA C900, Class 150, with push-on joints.

2.1.2.4 Oriented Polyvinyl Chloride (PVCO) Plastic Pipe

Pipe, couplings, and fittings shall be manufactured of material conforming to ASTM D 1784, Class 12454-B. Pipe shall conform to AWWA C909, Class 150, and to ASTM F 1483 and shall have an outside diameter equal to cast iron outside diameter.

2.1.3 RPMP Pipe

RPMP shall be produced by centrifugal casting and shall have an outside diameter equal to ductile iron pipe dimensions from 450 mm 18 inch to 1200 mm 48 inch. The inner surface of the pipe shall have a smooth uniform continuous resin-rich surface liner. The minimum pipe stiffness shall be 248 kPa 36 psi. RPMP shall be in accordance with ASTM D 3754.

2.1.4 RTRP Lines

ASTM D 2996, 2413 kPa (350 psi) 350 psi rated, cast iron pipe dimensions only, with elastomeric gasket joints. Fittings: AWWA C110, rated1034 kPa (150 psi). 150 psi. When mechanical joint fittings are used, inside sleeves provided by the manufacturer shall be used.

2.1.5 Ductile Iron Pipe

a. Ductile Iron Pipe: AWWA C151, working pressure not less than 1034 kPa (150 psi), 150 psi, unless otherwise shown or specified.

b. River Crossing Pipe: AWWA C151, minimum thickness Class 54 with joints in compliance with applicable requirements of AWWA C110.

c. Fittings, Mechanical: AWWA C110, rated for1034 kPa (150 psi). 150 psi.

d. Fittings, Push-On: AWWA C110 and AWWA C111, rated for1034 kPa (150 psi). 150 psi.

2.1.6 Steel Pipe

a. Steel Pipe, 150 mm (6 inches) 6 inches Diameter and Larger: AWWA C200.

b. Steel Pipe Less Than 150 mm (6 inches) 6 inches Diameter: ASTM A 53, standard weight, threaded end, galvanized.

c. Fittings, 150 mm (6 inches) 6 inches Diameter and Larger: AWWA C200, fabricated in compliance with AWWA C208.

d. Fittings Less Than 150 mm (6 inches) 6 inches Diameter: ASME B16.3, galvanized.

2.2 JOINTS

2.2.1 PE Piping

a. Heat Fusion Joints: ASTM D 2657.

b. Flanged Joints: ASME B16.1 or AWWA C207.

c. Mechanical Joints: ASME B16.1.

2.2.2 Polypropylene Piping

Heat Fusion Joints: ASTM D 2657.

2.2.3 PVC Piping

a. Screw Joint Fittings: ASTM D 2464, Schedule 80.

b. Push-On Joint Fittings: ASTM D 3139, with ASTM F 477gaskets.

c. Solvent Cement: ASTM D 2564.

d. Couplings for use with plain end pipe shall have centering rings or stops to ensure the coupling is centered on the joint.

2.2.4 PVCO Pipe

Joints shall conform to ASTM D 3139. Elastomeric gaskets shall conform to ASTM F 477.

2.2.5 Ductile Iron Piping

a. Push-on Joints: AWWA C111.

b. Mechanical Joints: AWWA C111 as modified by AWWA C151.

c. Flanged Joints: AWWA C115.

2.2.6 Steel Piping

a. Push-on Joints: AWWA C200.

b. Mechanical Joints: AWWA C200.

c. Flanged Joints: AWWA C207.

2.2.7 RPMP Piping

Joints shall be bell and spigot gasket coupling utilizing an elastomeric gasket in accordance with ASTM D 4161 and ASTM F 477.

2.3 VALVES

2.3.1 Gate Valves

Gate valves 80 mm (3 inches) 3 inches and larger shall comply with AWWA C500. Valves for buried service shall be non-rising stem (NRS), 50 mm (2 inch) 2 inch square nut operated with joints applicable to the pipe or installation. Buried valves shall be furnished with extension stems comprising socket, extension stem and operating nut, and shall be of an appropriate length to bring operating nut to within 150 mm 6 inches of grade. One 1200 mm 4 foot "T" handle valve wrench shall be furnished for each quantity of 6 buried valves. Gate valves that are exposed or installed inside shall be outside screw and yoke (OS&Y), handwheel operated with flange ends unless otherwise indicated. Gate valve operating nuts and handwheels shall have an arrow and the word "OPEN" cast in raised letters to indicate the direction of opening. Gate valves 350 mm (14 inches) 14 inches and larger shall be equipped with gearing to reduce operating effort. Gate valves 350 mm (14 inches) 14 inches and larger installed in horizontal lines in horizontal position with stems horizontal shall be equipped with bronze track, roller and scrapers to support the weight of the gate for its full length of travel. Gate valves 350 mm (14 inches) 14 inches and larger installed in vertical pipe lines with stems horizontal shall be fitted with slides to assist the travel of the gate assembly.

2.3.2 Check Valves

Check valves shall permit free flow of sewage forward and provide a positive check against backflow. Check valves shall be designed for a minimum working pressure of 1034 kPa (150 psi) 150 psi or as indicated. The body shall be iron. The manufacturer's name, initials, or trademark and also the size of the valve, working pressure, and direction of flow shall be directly cast on the body.

a. Ball Check Valves shall be iron body, shall have flanged ends, and shall be the non-slam type. Flanges shall be the Class 125 125 pound type complying with ASME B16.1. Ball shall be stainless steel unless otherwise specified.

b. Swing Check Valves shall comply with AWWA C508 and shall be iron body, bronze mounted, and shall have flanged ends. Flanges shall be the Class 125 125 pound type complying with ASME B16.1.

2.3.3 Plug Valves

Cast iron valves shall comply with MSS SP-78. Steel plug valves shall comply with API Spec 6D.

2.3.4 Pinch Valves

Pinch valves shall be double acting, jam-proof type with unobstructed streamlined flows and built-in operator. The body shall be iron with a non-rising handwheel. The sleeve shall be of pure gum rubber, neoprene, Buna N or hypalon as required for service. The valve shall have flanged ends. Flanges shall be of the Class 125 125 pound type complying with ASME B16.1.

2.3.5 Air Release Valves

Air release valves shall be designed to permit release of air from an empty

pipe during filling and shall be capable of discharging accumulated air in the line while the line is in operation and under pressure. Valves shall be attached by means of threaded pipe connections. Valves shall be vented to the atmosphere.

a. Manual Air Release Valves: Manual air release valves shall consist of a 80 mm (3 inch) 3 inch gate valve and80 mm (3 inch) 3 inch ductile iron pipe and fittings. The valve shall be installed with its line of flow in the horizontal position.

b. Automatic Air Release Valve: Automatic air release valves shall be of the compound lever type capable of withstanding operating pressures of 1034 kPa (150 psi).150 psi. The valves shall have a 13 mm (1/2 inch) 1/2 inch outlet. The body and cover of the valve shall be of iron with a stainless steel float. All internal parts shall be stainless steel or bronze. The valve shall be specifically adapted for use with sewage. Each valve shall be complete with hose and blow-off valves to permit backflushing without dismantling the valve.

2.4 VALVE BOXES

Valve boxes shall be cast iron or concrete, except that concrete boxes may be installed only in locations not subject to vehicular traffic. Cast iron boxes shall be the extension type with slide type adjustment and with flared base. The minimum thickness of metal shall be 5 mm.3/16 inch. The box length shall be adaptable, without full extension, to the depth of cover over the pipe at the valve locations. Concrete boxes shall be the standard product of a manufacturer of precast concrete equipment. The word "SEWER" shall be cast in the cover.

2.5 VALVE VAULTS

Valve vaults shall be precast concrete units conforming to ASTM C 478M ASTM C 478.

2.6 MISCELLANEOUS MATERIALS

Miscellaneous materials shall comply with the following requirements:

2.6.1 Pipe Coatings and Linings

a. Steel, interior: AWWA C203 or AWWA C210.

b. Steel, exterior, buried: AWWA C203.

c. Steel, exterior, exposed: AWWA C210.

2.6.2 Joint Lubricants

Joint lubricants shall be as recommended by the pipe manufacturer.

2.6.3 Bolts, Nuts and Glands

AWWA C111.

2.6.4 Joint Compound

A stiff mixture of graphite and oil or inert filler and oil.

2.6.5 Joint Tape

ASTM D 3308.

2.6.6 Bond Wire

Bond wire type RHW or USE, Size 1/0 AWG, neoprene jacketed copper conductor shaped to stand clear of the joint.

PART 3 EXECUTION

3.1 INSTALLATION

Pipe, pipe fittings, and appurtenances shall be installed at the locations indicated. Excavation, trenching, and backfilling shall be as specified in Section 02316A EXCAVATION, TRENCHING AND BACKFILLING FOR UTILITIES SYSTEMS.

3.1.1 Adjacent Facilities

Installation of force mains and inverted siphons near adjacent facilities shall be as specified in Section 02531 SANITARY SEWERS.

3.1.2 Cutting

Pipe shall be cut in a neat manner with mechanical cutters. Wheel cutters shall be used where practicable. Sharp and rough edges shall be ground smooth and loose material removed from the pipe before laying.

3.1.3 Laying

Except where otherwise authorized, pipe shall be laid with bells facing the direction of laying. Before lowering and while suspended, the pipe shall be inspected for defects. Defective material shall be rejected. Pipe shall be laid in compliance with the following:

a. Ductile Iron: AWWA C600.

b. Steel: AWWA C600.

c. Concrete: Manufacturer's instructions.

d. Polyvinyl Chloride: Manufacturer's instructions.

e. Polyethylene: ASTM D 2774.

f. Polypropylene: ASTM D 2774.

g. Reinforced Thermosetting Resin: Manufacturer's instructions.

h. Reinforced Plastic Mortar: Manufacturer's Instructions.

3.1.4 Jointing

3.1.4.1 Concrete Pressure Pipe

The manufacturer's instructions shall be followed when lubricating and installing rubber gaskets. Joints shall comply with the manufacturer's instructions. The external annular space shall be filled with cement mortar or with a portland cement-filled polyurethane loop. For pipe 600 mm (24 inch) 24 inchdiameter and larger, the internal annular space shall be filled with cement mortar and struck off to ensure a smooth and continuous surface between pipe sections. Pipe less than 600 mm (24 inch) 24 inch diameter shall have a rope or trowelable mastic affixed to the concrete face of the bell socket before joining the sections of pipe. The mastic shall not be detrimental to the rubber gasket and shall fill the interior annular space when the pipe sections are pushed together.

3.1.4.2 Joints for PE Pipe

Heat fusion joints shall comply with the manufacturer's instructions concerning equipment, temperature, melt time, heat coat, and joining time. Flanged and mechanical joints shall be made in compliance with the manufacturer's instructions.

3.1.4.3 Joints for Polypropylene Pipe

Heat fusion joints shall comply with the manufacturer's instructions concerning equipment, temperature, melt time, heat coat, and joining time.

3.1.4.4 Joints for PVC Pipe

a. Threaded joints shall be made by wrapping the male threads with joint tape or by applying an approved thread lubricant, then threading the joining members together. The joint shall be tightened with strap wrenches which will not damage the pipe and fittings. The joint shall be tightened no more than 2 threads past hand-tight.

b. Push-on joints: The ends of pipe for push-on joints shall be beveled to facilitate assembly. Pipe shall be marked to indicate when the pipe is fully seated. The gasket shall be lubricated to prevent displacement. The gasket shall remain in proper position in the bell or coupling while the joint is made.

c. Solvent-weld joints shall comply with the manufacturer's instructions.

3.1.4.5 Joints for RPMP Pipe

Joints shall be elastomeric gasket in accordance with ASTM D 4161.

3.1.4.6 Joints for RTRP Lines

Elastomeric gasket joints shall comply with the manufacturer's instructions.

3.1.4.7 Joints for Ductile Iron Pipe

Installation of mechanical and push-on type joints shall comply with AWWA C600 and the manufacturer's instructions. Installation of flanged joints shall comply with manufacturer's instructions.

3.1.4.8 Joints for Steel Pipe

Screw joints shall be made tight with joint tape or joint compound applied with a brush to the male threads only. Installation of mechanical joints, push-on joints, and flanged joints shall comply with the manufacturer's instructions.

3.1.5 Coating and Lining

Field coating of non-galvanized steel pipe shall comply with AWWA C203. The applied materials shall be tested by means of a spark-type electrical device in compliance with AWWA C203. Flaws and holidays in the coating or lining of the pipe and the pipe joints shall be repaired; the repaired areas shall be at least equal in thickness to the minimum required for the pipe.

3.1.7 Installation of Valves

Prior to installation, valves shall be cleaned of all foreign matter and inspected for damage. Valves shall be fully opened and closed to ensure that all parts are properly operating. Valves shall be installed with the stem in the vertical position. Valves shall be installed in valve boxes as indicated..

3.1.8 Installation of Valve Boxes

Valve boxes shall be installed over each outside gate valve, unless otherwise indicated. Valve boxes shall be centered over the valve. Fill shall be carefully tamped around each valve box to a distance of 1.2 m 4 feet on all sides or to undisturbed trench face, if less than1.2 m. 4 feet.

3.1.9 Installation of Valve Vaults

Valve vaults shall be installed as indicated.

3.1.10 Drain Lines

Drain lines shall be installed where indicated. The drain line shall consist of a tee in the main line with a 100 mm (4 inch) 4 inch diameter branch, a 100 mm (4 inch) 4 inch diameter elbow, and a 100 mm (4 inch) 4 inch gate valve.

3.1.11 Thrust Restraint

Plugs, caps, tees and bends deflecting 11-1/4 degrees or more, either vertically or horizontally, shall be provided with thrust restraint. Valves shall be securely anchored or shall be provided with thrust restraints to prevent movement. Thrust restraints shall be either thrust blocks or, for ductile-iron pipes, restrained joints.

3.1.11.1 Thrust Blocks

Thrust blocking shall be concrete of a mix not leaner than: 1 cement, 2-1/2 sand, 5 gravel; and having a compressive strength of not less than 14 MPa (2000 psi) 2000 psi after 28 days. Blocking shall be placed between solid ground and the fitting to be anchored. Unless otherwise indicated or directed, the base and thrust bearing sides of thrust blocks shall be poured directly against undisturbed earth. The sides of thrust blocks not subject to thrust may be poured against forms. The area of bearing shall

be as shown or as directed. Blocking shall be placed so that the fitting joints will be accessible for repair. Steel rods and clamps, protected by galvanizing or by coating with bituminous paint, shall be used to anchor vertical down bends into gravity thrust blocks.

3.1.11.2 Restrained Joints

For ductile iron pipe, restrained joints shall be designed by the Contractor or the pipe manufacturer in accordance with DIPRA TRD.

3.1.12 Grout

Grout for exterior joint protection on concrete pipes shall be a mix of 1 part portland cement, 2 parts sand, and of sufficient liquid consistency to flow into the joint recess beneath the diaper. Grout for interior joint protection shall be a mix of 1 part portland cement and 1 part sand. A polyurethane foam loop, impregnated with portland cement, may be substituted for grout for exterior joints.

3.1.13 Bonded Joints

Where indicated, a metallic bond shall be provided at each joint, including joints made with flexible couplings or rubber gaskets, of ferrous-metallic piping to effect continuous conductivity. The bond shall be of the thermal-weld type.

3.2 HYDROSTATIC TESTS

The pipeline shall be subjected to both a pressure test and a leakage test. The method proposed for disposal of waste water from hydrostatic tests shall be approved by the Contracting Officer. Testing shall be the responsibility of the Contractor. Testing shall be performed by an approved independent testing laboratory or by the Contractor subject to approval. The test may be witnessed by the Contracting Officer. The Contracting Officer shall be notified at least 7 days in advance of equipment tests. The final test report shall be delivered to the Contracting Officer within 30 days of the test.

3.2.1 Pressure Test

After the pipe has been installed, joints completed, thrust blocks have been in place for at least five days, and the trench has been partially backfilled, leaving the joints exposed for examination, the pipe shall be filled with water to expel all air. The pipeline shall be subjected to a test pressure of 700 kPa (100 psi) 100 psi or 150 percent of the working pressure, whichever is greater, for a period of at least one hour. Each valve shall be opened and closed several times during the test. The exposed pipe, joints, fitting, and valves shall be examined for leaks. Visible leaks shall be stopped or the defective pipe, fitting, joints, or valve shall be replaced.

3.2.2 Leakage Test

The leakage test may be conducted subsequent to or concurrently with the pressure test. The amount of water permitted as leakage for the line shall be placed in a sealed container attached to the supply side of the test pump. No other source of supply will be permitted to be applied to the

pump or line under test. The water shall be pumped into the line by the test pump as required to maintain the specified test pressure as described for pressure test for a 2 hour period. Exhaustion of the supply or the inability to maintain the required pressure will be considered test failure. PE pipe can experience diametric expansion and pressure elongation during initial testing. The manufacturer shall be consulted prior to testing for special testing considerations. Allowable leakage shall be determined by the following I-P formula:

L = NDP/K Where:

L = Allowable leakage in gallons per hour.

N = Number of joints in length of pipeline tested.

D = Nominal diameter of the pipe in inches.

P = Square root of the test pressure in psig.

K = 7400 for pipe materials.

At the conclusion of the test, the amount of water remaining in the container shall be measured and the results recorded in the test report.

3.2.3 Retesting

If any deficiencies are revealed during any test, such deficiencies shall be corrected and the tests shall be reconducted until the results of the tests are within specified allowances, without additional cost to the Government.

-- End of Section --

SECTION 02621A

FOUNDATION DRAINAGE SYSTEM
01/98

PART 1 GENERAL

1.1 REFERENCES

The publications listed below form a part of this specification to the extent referenced. The publications are referred to in the text by basic designation only.

AMERICAN ASSOCIATION OF STATE HIGHWAY AND TRANSPORTATION OFFICIALS (AASHTO)

AASHTO M 252M	(1996) Corrugated Polyethylene Drainage Tubing
AASHTO M 294M	(1998) Corrugated Polyethylene Pipe, 305- to 915-mm (12- to 36 in.) Diameter

AMERICAN SOCIETY FOR TESTING AND MATERIALS (ASTM)

ASTM A 74	(1998) Cast Iron Soil Pipe and Fittings
ASTM A 760/A 760M	(1997) Corrugated Steel Pipe, Metallic-Coated for Sewers and Drains
ASTM B 745/B 745M	(1997) Corrugated Aluminum Pipe for Sewers and Drains
ASTM C 4	(1999) Clay Drain Tile
ASTM C 14	(1999) Concrete Sewer, Storm Drain, and Culvert Pipe
ASTM C 14M	(1999) Concrete Sewer, Storm Drain, and Culvert Pipe (Metric)
ASTM C 33	(1999ael) Concrete Aggregates
ASTM C 412	(1999) Concrete Drain Tile
ASTM C 412M	(1999) Concrete Drain Tile (Metric)
ASTM C 425	(2002) Compression Joints for Vitrified Clay Pipe and Fittings
ASTM C 444	(1995) Perforated Concrete Pipe
ASTM C 444M	(1995) Perforated Concrete Pipe (Metric)
ASTM C 498	(1995) Perforated Clay Drain Tile

ASTM C 508	(1998) Asbestos-Cement Underdrain Pipe
ASTM C 654	(1999) Porous Concrete Pipe
ASTM C 654M	(1999) Porous Concrete Pipe (Metric)
ASTM C 700	(1999) Vitrified Clay Pipe, Extra Strength, Standard Strength, and Perforated
ASTM D 2751	(1996a) Acrylonitrile-Butadiene-Styrene (ABS) Sewer Pipe and Fittings
ASTM D 3034	(2000) Type PSM Poly(Vinyl Chloride) (PVC) Sewer Pipe and Fittings
ASTM D 3212	(1996a) Joints for Drain and Sewer Plastic Pipes Using Flexible Elastomeric Seals
ASTM F 405	(1997) Corrugated Polyethylene (PE) Tubing and Fittings
ASTM F 667	(1997) Large Diameter Corrugated Polyethylene Tubing and Fittings
ASTM F 758	(1995) Smooth-Wall Poly(Vinyl Chloride) (PVC) Plastic Underdrain Systems for Highway, Airport, and Similar Drainage
ASTM F 949	(2001a) Poly(Vinyl Chloride) (PVC) Corrugated Sewer Pipe with a Smooth Interior and Fittings

1.2 SUBMITTALS

Government approval is required for submittals with a "G" designation; submittals not having a "G" designation are for information only. When used, a designation following the "G" designation identifies the office that will review the submittal for the Government. The following shall be submitted in accordance with Section 01330 SUBMITTAL PROCEDURES:

SD-07 Certificates

Materials

Certifications from the manufacturers attesting that materials meet specification requirements.

1.3 DELIVERY, STORAGE AND HANDLING

Materials placed in storage shall be stored with protection from the weather, humidity and temperature variations, dirt and dust, or other contaminants. Plastic pipe shall not be exposed to direct sunlight for more than 6 months from time of manufacturer to installation.

PART 2 PRODUCTS

2.1 MATERIALS

Pipe for foundation drainage system shall be of the type and size indicated. Appropriate transitions, adapters, or joint details shall be used where pipes of different types or materials are connected.

2.1.3 Concrete Pipe

ASTM C 14M ASTM C 14, Class 1.

2.1.4 Perforated Concrete Pipe

ASTM C 14M ASTM C 14, Class 1 with perforations conforming to ASTM C 444M ASTM C 444, Type I.

2.1.5 Porous Concrete Pipe

ASTM C 654M ASTM C 654, standard or extra strength class.

2.1.8 Concrete Drain Tile

ASTM C 412M ASTM C 412, standard- quality.

2.1.13 Plastic Pipe

Plastic pipe shall contain ultraviolet inhibitor to provide protection from exposure to direct sunlight.

2.1.13.1 Corrugated Polyethylene (PE) Drainage Pipe

The Contractor shall furnish ASTM F 405 heavy duty for pipe80 to 150 mm (3 to 6 inches) 3 to 6 inches in diameter inclusive, ASTM F 667 for pipe200 to 600 mm (8 to 24 inches) 8 to 24 inches in diameter. Fittings shall be pipe manufacturer's standard type and shall conform to the indicated specification.

2.1.13.2 Acrylonitrile-Butadiene-Styrene (ABS) Pipe

ASTM D 2751, with a maximum SDR of 35.

2.1.13.3 Polyvinyl Chloride (PVC) Pipe

ASTM F 758, Type PS 46, ASTM D 3034, or ASTM F 949 with a minimum pipe stiffness of317 kPa (46 psi). 46 psi.

2.1.13.4 Circular Perforations in Plastic Pipe

Circular holes shall be cleanly cut, not more than8 mm (5/16 inch) 5/16 inch or less than5 mm (3/16 inch) 3/16 inch in diameter, and arranged in rows parallel to the longitudinal axis of the pipe. Perforations shall be approximately75 mm (3 inches) 3 inches apart, center-to-center, along rows. The rows shall be approximately38 mm (1-1/2 inches) 1-1/2 inches apart and arranged in a staggered pattern so that all perforations lie at the midpoint between perforations in adjacent rows. The rows shall be spaced over not more than 155 degrees of circumference. The spigot or tongue end of the pipe shall not be perforated for a length equal to the depth of the socket and perforations shall continue at uniform spacing over the entire length of the pipe. Manufacturer's standard perforated pipe which essentially meets these requirements may be used with prior approval

of the Contracting Officer.

2.1.13.5 Slotted Perforations in Plastic Pipe

Circumferential slots shall be cleanly cut so as not to restrict the inflow of water and uniformly spaced along the length and circumference of the tubing. Width of slots shall not exceed3 mm (1/8 inch) 1/8 inchor be less than0.79 mm (1/32 inch). 1/32 inch. The length of individual slots shall not exceed32 mm (1-1/4 inches) 1-1/4 inches on75 mm (3 inch) 3 inch diameter tubing; 10 percent of the tubing inside nominal circumference on 100 to 200 mm (4 to 8 inch) 4 to 8 inch diameter tubing; and65 mm (2-1/2 inches) 2-1/2 inches on250 mm (10 inch) 10 inch diameter tubing. Rows of slots shall be symmetrically spaced so that they are fully contained in quadrants of the pipe. Slots shall be centered in the valleys of the corrugations of profile wall pipe. The water inlet area shall be a minimum of1058 square millimeters per linear meter (0.5 square inch per linear foot) 0.5 square inch per linear foot of tubing. Manufacturer's standard perforated pipe which essentially meets these requirements may be used with prior approval of the Contracting Officer.

2.1.14 Fittings

Fittings shall be of compatible materials for pipe, of corresponding weight and quality, and as specified herein.

2.1.15 Cleanouts and Piping Through Walls

Cleanout pipe and fittings and piping through walls and footings shall be cast-iron soil pipe. Each cleanout shall have a brass ferrule and a cast-brass screw-jointed plug with socket or raised head for wrench.

2.1.16 Cover and Wrapping Materials for Open Joints in Drain Tile

Cover material may be tar paper, roofing paper, reinforced building paper, glass fiber fabric, or other similar type material. Wrapping material shall be 18-14 mesh,0.25 mm (0.01 inch) 0.01 inch diameter nonferrous wire cloth.

2.1.17 Bedding and Pervious Backfill for Foundation Drains

Bedding and pervious backfill shall be in accordance with Section 02315A EXCAVATION, FILLING, AND BACKFILLING FOR BUILDINGS.

2.1.18 Protective Covering for Pervious Backfill

Protective covering shall be fiberglass mat of lime borosilicate glass fibers. Fibers shall be 8 to 12 microns in average diameter,50 to 102 mm (2 to 4 inches) 2 to 4 inches in length, and bonded with phenol formaldehyde resin. Mat shall be roll type, nonperforated, water permeable, with thickness between6 and 13 mm (1/4 and 1/2 inch) 1/4 and 1/2 inch and density of12 Kg/cubic meter (3/4 pcf) 3/4 pcf.

PART 3 EXECUTION

3.1 GENERAL REQUIREMENTS

3.1.1 Extent

Foundation drainage shall be furnished and installed as a complete system to 1.5 m5 feet beyond the building.

3.1.2 Outlet Connections

Foundation pipe shall be connected to the storm drainage system as shown and specified in Section 02630 STORM-DRAINAGE SYSTEM.

3.1.3 Drainage Lines

Drainage lines shall be constructed of drain tile, perforated pipe, or porous pipe.

3.1.4 Outlet Lines

Outlet lines shall be constructed of closed-joint nonperforated, nonporous pipe.

3.2 INSTALLATION

3.2.1 Trenching and Excavation

Required trenching and excavation shall be in accordance with Section 02315A EXCAVATION, FILLING, AND BACKFILLING FOR BUILDINGS. Trenches shall be kept dry during installation of drainage system. Changes in direction of drain lines shall be made with 1/8 bends. Wye fittings shall be used at intersections.

3.2.2 Bedding

Graded bedding, minimum150 mm 6 inches in depth, shall be placed in the bottom of trench for its full width and length and compacted as specified prior to laying of foundation drain pipe. Each section shall rest firmly upon the bedding, through the entire length, with recesses formed for bell joints. Except for recesses for bell joints, the bedding shall fully support the lower quadrant of the pipe.

3.2.3 Pipe Laying

Drain lines shall be laid to true grades and alignment with a continuous fall in the direction of flow. Bells of pipe sections shall face upgrade. Interior of pipe shall be cleaned thoroughly before being laid. When drain lines are left open for connection to discharge lines, the open ends shall be temporarily closed and the location marked with wooden stakes. Perforated pipe shall be laid with perforations facing down. Any length that has had its grade or joints disturbed shall be removed and relaid at no additional cost to the Government. Perforated corrugated polyethylene drainage tubing and plastic piping shall be installed in accordance with manufacturer's specifications and as specified herein. Tubing and piping with physical imperfections shall not be installed.

3.2.4 Jointing

3.2.4.1 Perforated and Porous Pipes

Perforated and porous types of drain pipes shall be laid with closed joints.

3.2.4.2 Nonperforated Drain Tile

Nonperforated and plain-end drain tile shall be laid with3 to 6 mm 1/8 to 1/4 inch open joints. Open joints shall be covered or wrapped. Covered joints shall have one thickness of the cover material placed over the joint. Material shall overlap the joint not less than100 mm 4 inches on each side and cover the tile for not less than the upper half or more than the upper two-thirds of the circumference of the tile. Strips of wire cloth wrapping material75 mm (3 inches) 3 inches wide shall be used for wrapped joints, with ends fastened together.

3.2.4.4 Joints of Concrete or Clay Sewer Pipe

Joints of concrete or clay sewer pipe shall be caulked with oakum and filled solid with cement mortar except where compression joints conforming to ASTM C 425 are used on vitrified clay pipe.

3.2.4.7 Plain-End Perforated Clay

Plain-end perforated clay drain tile joints shall be made with spring-wire clips, coated with a rust preventive, that will maintain a taut but elastic joint between sections when laid.

3.2.4.8 ABS Pipe

ABS pipe shall be joined using solvent cement or elastomeric joints and shall be in accordance with ASTM D 2751, with dimensions and tolerances in accordance with TABLE II therein.

3.2.4.9 PVC Pipe

PVC pipe joints shall be in accordance with ASTM D 3034, ASTM D 3212, or ASTM F 949.

3.2.4.10 Corrugated Polyethylene

Corrugated polyethylene (PE) pipe joints shall be in accordance with ASTM F 405 or ASTM F 667.

3.2.6 Backfilling

After joints and connections have been inspected and approved, the specified pervious backfill material shall be placed for the full width of the trench and full width between pipe and adjacent walls and300 mm (12 inches) 12 inches above the top of the pipe. The backfill shall be placed preventing displacement of or injury to the pipe or tile. A protective covering, as specified, shall be placed over the pervious backfill for the full width of the trench before regular backfill is placed. Backfill shall be compacted as specified in Section 02315A EXCAVATION, FILLING AND BACKFILLING FOR BUILDINGS.

3.2.7 Cleanouts

Cleanouts shall be provided in locations indicated. Cleanouts in unpaved areas shall be set in305 by 305 by 102 mm (12 by 12 by 4 inch) 12 by 12 by 4 inch concrete blocks.

-- End of Section --

SECTION 02630

STORM DRAINAGE
07/03

PART 1 GENERAL

1.1 REFERENCES

The publications listed below form a part of this specification to the extent referenced. The publications are referred to in the text by the basic designation only.

ACI INTERNATIONAL (ACI)

ACI 346	(2001) Specification for Cast-in-Place Concrete Pipe

AMERICAN ASSOCIATION OF STATE HIGHWAY AND TRANSPORTATION OFFICIALS (AASHTO)

AASHTO HB-17	(2002) Standard Specifications for Highway Bridges
AASHTO M 167	(2000) Corrugated Steel Structural Plate, Zinc Coated, for Field Bolted Pipe, Pipe-Arches and Arches
AASHTO M 190	(1995; R 2000) Bituminous-Coated Corrugated Metal Culvert Pipe and Pipe Arches
AASHTO M 198	(1998) Joints for Circular Concrete Sewer and Culvert Pipe Using Flexible Watertight Gaskets
AASHTO M 219	(1992; R 2000) Corrugated Aluminum Alloy Pipe, Structural Plate for Field Bolted Pipe-Arches and Arches
AASHTO M 243	(1996; R 2000) Field Applied Coating of Corrugated Metal Structural Plate for Pipe, Pipe-Arches, and Arches
AASHTO M 294	(2002) Corrugated Polyethylene Pipe, 300- to 1200- mm Diameter
AASHTO MP 7	(2001) Specification for Corrugated Polyethylene Pipe, 1350 and 1500 mm Diameter

AMERICAN RAILWAY ENGINEERING & MAINTENANCE-OF-WAY ASSOCIATION (AREMA)

AREMA Manual	(2003) Manual for Railway Engineering

ASTM INTERNATIONAL (ASTM)

ASTM A 48/A 48M	(2000) Gray Iron Castings
ASTM A 74	(1998) Cast Iron Soil Pipe and Fittings
ASTM A 123/A 123M	(2002) Zinc (Hot-Dip Galvanized) Coatings on Iron and Steel Products
ASTM A 536	(1984; R 1999el) Ductile Iron Castings
ASTM A 716	(1999) Ductile Iron Culvert Pipe
ASTM A 742/A 742M	(1998) Steel Sheet, Metallic Coated and Polymer Precoated for Corrugated Steel Pipe
ASTM A 760/A 760M	(2001a) Corrugated Steel Pipe, Metallic-Coated for Sewers and Drains
ASTM A 762/A 762M	(2000) Corrugated Steel Pipe, Polymer Precoated for Sewers and Drains
ASTM A 798/A 798M	(2001) Installing Factory-Made Corrugated Steel Pipe for Sewers and Other Applications
ASTM A 807/A 807M	(2002e1) Installing Corrugated Steel Structural Plate Pipe for Sewers and Other Applications
ASTM A 849	(2000) Post-Applied Coatings, Pavings, and Linings for Corrugated Steel Sewer and Drainage Pipe
ASTM A 929/A 929M	(2001) Steel Sheet, Metallic-Coated by the Hot-Dip Process for Corrugated Steel Pipe
ASTM B 26/B 26M	(2002) Aluminum-Alloy Sand Castings
ASTM B 745/B 745M	(1997) Corrugated Aluminum Pipe for Sewers and Drains
ASTM C 12	(2002) Installing Vitrified Clay Pipe Lines
ASTM C 14	(1999) Concrete Sewer, Storm Drain, and Culvert Pipe
ASTM C 14M	(1999) Concrete Sewer, Storm Drain, and Culvert Pipe (Metric)
ASTM C 32	(1993; R 1999el) Sewer and Manhole Brick (Made from Clay or Shale)
ASTM C 55	(2001a) Concrete Brick
ASTM C 62	(2001) Building Brick (Solid Masonry Units Made from Clay or Shale)

ASTM C 76	(2002) Reinforced Concrete Culvert, Storm Drain, and Sewer Pipe
ASTM C 76M	(2002) Reinforced Concrete Culvert, Storm Drain, and Sewer Pipe (Metric)
ASTM C 139	(2001) Concrete Masonry Units for Construction of Catch Basins and Manholes
ASTM C 231	(1997el) Air Content of Freshly Mixed Concrete by the Pressure Method
ASTM C 270	(2002) Mortar for Unit Masonry
ASTM C 425	(2002) Compression Joints for Vitrified Clay Pipe and Fittings
ASTM C 443	(2002) Joints for Concrete Pipe and Manholes, Using Rubber Gaskets
ASTM C 443M	(2002) Joints for Concrete Pipe and Manholes, Using Rubber Gaskets (Metric)
ASTM C 444M	(1995) Perforated Concrete Pipe (Metric)
ASTM C 444	(1995) Perforated Concrete Pipe
ASTM C 478	(2002a) Precast Reinforced Concrete Manhole Sections
ASTM C 478M	(1997) Precast Reinforced Concrete Manhole Sections (Metric)
ASTM C 506	(2002) Reinforced Concrete Arch Culvert, Storm Drain, and Sewer Pipe
ASTM C 506M	(2002) Reinforced Concrete Arch Culvert, Storm Drain, and Sewer Pipe (Metric)
ASTM C 507	(2002) Reinforced Concrete Elliptical Culvert, Storm Drain, and Sewer Pipe
ASTM C 507M	(2002) Reinforced Concrete Elliptical Culvert, Storm Drain, and Sewer Pipe (Metric)
ASTM C 564	(1997) Rubber Gaskets for Cast Iron Soil Pipe and Fittings
ASTM C 655	(2002) Reinforced Concrete D-Load Culvert, Storm Drain, and Sewer Pipe
ASTM C 700	(2002) Vitrified Clay Pipe, Extra Strength, Standard Strength, and Perforated
ASTM C 789	(2000) Precast Reinforced Concrete Box Sections for Culverts, Storm Drains, and

	Sewers
ASTM C 828	(2001) Low-Pressure Air Test of Vitrified Clay Pipe Lines
ASTM C 877	(2002) External Sealing Bands for Concrete Pipe, Manholes, and Precast Box Sections
ASTM C 877M	(2002) External Sealing Bands for Concrete Pipe, Manholes, and Precast Box Sections (Metric)
ASTM C 923	(2002) Resilient Connectors Between Reinforced Concrete Manhole Structures, Pipes and Laterals
ASTM C 923M	(2002) Resilient Connectors Between Reinforced Concrete Manhole Structures, Pipes and Laterals (Metric)
ASTM C 924	(2002) Testing Concrete Pipe Sewer Lines by Low-Pressure Air Test Method
ASTM C 924M	(2002) Testing Concrete Pipe Sewer Lines by Low-Pressure Air Test Method (Metric)
ASTM C 1103	(2002) Joint Acceptance Testing of Installed Precast Concrete Pipe Sewer Lines
ASTM C 1103M	(2002) Joint Acceptance Testing of Installed Precast Concrete Pipe Sewer Lines (Metric)
ASTM D 1056	(2000) Flexible Cellular Materials - Sponge or Expanded Rubber
ASTM D 1171	(1999) Rubber Deterioration - Surface Ozone Cracking Outdoors or Chamber (Triangular Specimens)
ASTM D 1557	(2000) Laboratory Compaction Characteristics of Soil Using Modified Effort (56,000 ft-lbf/cu. ft. (2,700 kN-m/cu.m.))
ASTM D 1751	(1999) Preformed Expansion Joint Filler for Concrete Paving and Structural Construction (Nonextruding and Resilient Bituminous Types)
ASTM D 1752	(1984; R 1996el) Preformed Sponge Rubber and Cork Expansion Joint Fillers for Concrete Paving and Structural Construction
ASTM D 1784	(1999ael) Rigid Poly(Vinyl Chloride) (PVC) Compounds and Chlorinated Poly(Vinyl Chloride) (CPVC) Compounds

ASTM D 2167	(1994; R 2001) Density and Unit Weight of Soil in Place by the Rubber Balloon Method
ASTM D 2321	(2000) Underground Installation of Thermoplastic Pipe for Sewers and Other Gravity-Flow Applications
ASTM D 2729	(1996a) Poly(Vinyl Chloride) (PVC) Sewer Pipe and Fittings
ASTM D 2922	(2001) Density of Soil and Soil-Aggregate in Place by Nuclear Methods (Shallow Depth)
ASTM D 3017	(2001) Water Content of Soil and Rock in Place by Nuclear Methods (Shallow Depth)
ASTM D 3034	(2000) Type PSM Poly(Vinyl Chloride) (PVC) Sewer Pipe and Fittings
ASTM D 3212	(1996a) Joints for Drain and Sewer Plastic Pipes Using Flexible Elastomeric Seals
ASTM D 3350	(2002a) Polyethylene Plastics Pipe and Fittings Materials
ASTM F 477	(2002el) Elastomeric Seals (Gaskets) for Joining Plastic Pipe
ASTM F 679	(2001) Poly(Vinyl Chloride) (PVC) Large-Diameter Plastic Gravity Sewer Pipe and Fittings
ASTM F 714	(2001) Polyethylene (PE) Plastic Pipe (SDR-PR) Based on Outside Diameter
ASTM F 794	(2001) Poly(Vinyl Chloride) (PVC) Profile Gravity Sewer Pipe and Fittings Based on Controlled Inside Diameter
ASTM F 894	(1998a) Polyethylene (PE) Large Diameter Profile Wall Sewer and Drain Pipe
ASTM F 949	(2001a) Poly(Vinyl Chloride) (PVC) Corrugated Sewer Pipe with a Smooth Interior and Fittings
ASTM F 1417	(1992; R 1998) Installation Acceptance of Plastic Gravity Sewer Lines Using Low-Pressure Air

1.4 DELIVERY, STORAGE, AND HANDLING

1.4.1 Delivery and Storage

Materials delivered to site shall be inspected for damage, unloaded, and stored with a minimum of handling. Materials shall not be stored directly on the ground. The inside of pipes and fittings shall be kept free of dirt

and debris. Before, during, and after installation, plastic pipe and fittings shall be protected from any environment that would result in damage or deterioration to the material. The Contractor shall have a copy of the manufacturer's instructions available at the construction site at all times and shall follow these instructions unless directed otherwise by the Contracting Officer. Solvents, solvent compounds, lubricants, elastomeric gaskets, and any similar materials required to install plastic pipe shall be stored in accordance with the manufacturer's recommendations and shall be discarded if the storage period exceeds the recommended shelf life. Solvents in use shall be discarded when the recommended pot life is exceeded.

1.4.2 Handling

Materials shall be handled in a manner that ensures delivery to the trench in sound, undamaged condition. Pipe shall be carried to the trench, not dragged.

PART 2 PRODUCTS

2.1 PIPE FOR CULVERTS AND STORM DRAINS

Pipe for culverts and storm drains shall be of the sizes indicated and shall conform to the requirements specified.

2.1.1 Concrete Pipe

ASTM C 76M ASTM C 76, Class II or III, or ASTM C 655, D-Load.

2.1.10 PVC Pipe

The pipe manufacturer's resin certification, indicating the cell classification of PVC used to manufacture the pipe, shall be submitted prior to installation of the pipe. PVC pipe may not be used where pipe chamber exceeds 8 inches.

2.1.10.1 Type PSM PVC Pipe

ASTM D 3034, Type PSM, maximum SDR 35, produced from PVC certified by the compounder as meeting the requirements of ASTM D 1784, minimum cell class 12454-B.

2.1.10.2 Profile PVC Pipe

ASTM F 794, Series 46, produced from PVC certified by the compounder as meeting the requirements of ASTM D 1784, minimum cell class 12454-B.

2.1.10.3 Smooth Wall PVC Pipe

ASTM F 679 produced from PVC certified by the compounder as meeting the requirements of ASTM D 1784, minimum cell class 12454-B.

2.1.10.4 Corrugated PVC Pipe

ASTM F 949 produced from PVC certified by the compounder as meeting the requirements of ASTM D 1784, minimum cell class 12454-B.

2.1.11 PE Pipe

The pipe manufacturer's resin certification indicating the cell classification of PE used to manufacture the pipe shall be submitted prior to installation of the pipe. The minimum cell classification for polyethylene plastic shall apply to each of the seven primary properties of the cell classification limits in accordance with ASTM D 3350.

2.1.11.1 Smooth Wall PE Pipe

ASTM F 714, maximum DR of 21 for pipes 80 to 600 mm 3 to 24 inches in diameter and maximum DR of 26 for pipes 650 to 1200 mm 26 to 48 inches in diameter. Pipe shall be produced from PE certified by the resin producer as meeting the requirements of ASTM D 3350, minimum cell class 335434C.

2.1.11.2 Corrugated PE Pipe

AASHTO M 294, Type S or D, for pipes 300 to 1200 mm 12 to 48 inches and AASHTO MP 7, Type S or D, for pipes 1350 to 1500 mm54 to 60 inches produced from PE certified by the resin producer as meeting the requirements of ASTM D 3350, minimum cell class in accordance with AASHTO M 294. Pipe walls shall have the following properties:

Nominal Size (mm)	Minimum Wall Area (square mm/m)	Minimum Moment of Inertia of Wall Section (mm to the 4th/mm)
300	3200	390
375	4000	870
450	4900	1020
600	6600	1900
750	8300	2670
900	9500	3640
1050	9900	8900
1200	10900	8900
1350	12000	13110
1500	13650	13110

Nominal Size (in.)	Minimum Wall Area (square in/ft)	Minimum Moment of Inertia of Wall Section (in to the 4th/in)
12	1.50	0.024
15	1.91	0.053
18	2.34	0.062
24	3.14	0.116
30	3.92	0.163
36	4.50	0.222
42	4.69	0.543
48	5.15	0.543
54	5.67	0.800
60	6.45	0.800

2.1.11.3 Profile Wall PE Pipe

ASTM F 894, RSC 160, produced from PE certified by the resin producer as meeting the requirements of ASTM D 3350, minimum cell class 334433C. Pipe walls shall have the following properties:

Nominal Size (mm)	Minimum Wall Area (square mm/m)	Minimum Moment Of Inertia of Wall Section (mm to the 4th/mm) Cell Class 334433C	Cell Class 335434C
450	6300	850	620
525	8800	1150	840
600	9900	1330	970
675	12500	2050	1490
750	12500	2050	1490
825	14800	2640	2160
900	17100	3310	2700
1050	16500	4540	3720
1200	18700	5540	4540

Nominal Size (in.)	Minimum Wall Area (square in/ft)	Minimum Moment Of Inertia of Wall Section (in to the 4th/in) Cell Class 334433C	Cell Class 335434C
18	2.96	0.052	0.038
21	4.15	0.070	0.051
24	4.66	0.081	0.059
27	5.91	0.125	0.091
30	5.91	0.125	0.091
33	6.99	0.161	0.132
36	8.08	0.202	0.165
42	7.81	0.277	0.227
48	8.82	0.338	0.277

2.2 DRAINAGE STRUCTURES

2.2.1 Flared End Sections

Sections shall be of a standard design fabricated from zinc coated steel sheets meeting requirements of ASTM A 929/A 929M.

2.2.2 Precast Reinforced Concrete Box

Boxes subjected to highway loadings shall conform to ASTM C 789.

2.3 MISCELLANEOUS MATERIALS

2.3.1 Concrete

Unless otherwise specified, concrete and reinforced concrete shall conform to the requirements for 3000 MPa psi concrete. The concrete mixture shall have air content by volume of concrete, based on measurements made immediately after discharge from the mixer, of 5 to 7 percent when maximum size of coarse aggregate exceeds 37.5 mm. 1-1/2 inches. Air content shall be determined in accordance with ASTM C 231. The concrete covering over steel reinforcing shall not be less than 25 mm 1 inch thick for covers and not less than 40 mm 1-1/2 inches thick for walls and flooring. Concrete covering deposited directly against the ground shall have a thickness of at least 75 mm 3 inches between steel and ground. Expansion-joint filler material shall conform to ASTM D 1751, or ASTM D 1752, or shall be resin-impregnated fiberboard conforming to the physical requirements of ASTM D 1752.

2.3.2 Mortar

Mortar for pipe joints, connections to other drainage structures, and brick or block construction shall conform to ASTM C 270, Type M, except that the maximum placement time shall be 1 hour. The quantity of water in the mixture shall be sufficient to produce a stiff workable mortar. Water shall be clean and free of harmful acids, alkalies, and organic impurities. The mortar shall be used within 30 minutes after the ingredients are mixed with water. The inside of the joint shall be wiped clean and finished smooth. The mortar head on the outside shall be protected from air and sun with a proper covering until satisfactorily cured.

2.3.3 Precast Concrete Segmental Blocks

Precast concrete segmental block shall conform to ASTM C 139, not more than 200 mm (8 inches) 8 inches thick, not less than 200 mm (8 inches) 8 inches long, and of such shape that joints can be sealed effectively and bonded with cement mortar.

2.3.4 Brick

Brick shall conform to ASTM C 62, Grade SW; ASTM C 55, Grade S-I or S-II; or ASTM C 32, Grade MS. Mortar for jointing and plastering shall consist of one part portland cement and two parts fine sand. Lime may be added to the mortar in a quantity not more than 25 percent of the volume of cement. The joints shall be filled completely and shall be smooth and free from surplus mortar on the inside of the structure. Brick structures shall be plastered with 10 mm 1/2 inch of mortar over the entire outside surface of the walls. For square or rectangular structures, brick shall be laid in stretcher courses with a header course every sixth course. For round structures, brick shall be laid radially with every sixth course a stretcher course.

2.3.5 Precast Reinforced Concrete Manholes

Precast reinforced concrete manholes shall conform to ASTM C 478M ASTM C 478. Joints between precast concrete risers and tops shall be made with flexible watertight, rubber-type gaskets meeting the requirements of paragraph JOINTS.

2.3.7 Frame and Cover for Gratings

Frame and cover for gratings shall be cast gray iron, ASTM A 48/A 48M, Class 35B; cast ductile iron, ASTM A 536, Grade 65-45-12; or cast aluminum, ASTM B 26/B 26M, Alloy 356.0T6. Weight, shape, size, and waterway openings for grates and curb inlets shall be as indicated on the plans.

2.3.8 Joints

2.3.8.1 Flexible Watertight Joints

a. Materials: Flexible watertight joints shall be made with plastic or rubber-type gaskets for concrete pipe. The design of joints and the physical requirements for plastic gaskets shall conform to AASHTO M 198, and rubber-type gaskets shall conform to ASTM C 443M ASTM C 443. Factory-fabricated resilient joint materials shall conform to ASTM C 425. Gaskets shall have not more than one factory-fabricated splice, except that two factory-fabricated splices of the rubber-type gasket are permitted if the nominal diameter of the pipe being gasketed exceeds 1.35 m 54 inches.

2.3.8.2 External Sealing Bands

Requirements for external sealing bands shall conform to ASTM C 877M ASTM C 877.

2.3.8.3 Flexible Watertight, Gasketed Joints

a. Gaskets: When infiltration or exfiltration is a concern for pipe lines, the couplings may be required to have gaskets. The closed-cell expanded rubber gaskets shall be a continuous band approximately 178 mm 7 inches wide and approximately 10 mm 3/8 inch thick, meeting the requirements of ASTM D 1056, Type 2 A1, and shall have a quality retention rating of not less than 70 percent when tested for weather resistance by ozone chamber exposure, Method B of ASTM D 1171. Rubber O-ring gaskets shall be 21 mm 13/16 inch in diameter for pipe diameters of 914 mm 36 inches or smaller and 22 mm 7/8 inch in diameter for larger pipe having 13 mm 1/2 inch deep end corrugation. Rubber O-ring gaskets shall be 35 mm 1-3/8 inches in diameter for pipe having 25 mm 1 inch deep end corrugations. O-rings shall meet the requirements of AASHTO M 198 or ASTM C 443 ASTM C 443. Flexible plastic gaskets shall conform to requirements of AASHTO M 198, Type B.

b. Connecting Bands: Connecting bands shall be of the type, size and sheet thickness of band, and the size of angles, bolts, rods and lugs as indicated or where not indicated as specified in the applicable standards or specifications for the pipe. Exterior rivet heads in the longitudinal seam under the connecting band shall be countersunk or the rivets shall be omitted and the seam welded. Watertight joints shall be tested and shall meet the test requirements of paragraph HYDROSTATIC TEST ON WATERTIGHT JOINTS.

2.3.8.4 PVC Plastic Pipes

Joints shall be solvent cement or elastomeric gasket type in accordance with the specification for the pipe and as recommended by the pipe

manufacturer.

2.3.8.5 Smooth Wall PE Plastic Pipe

Pipe shall be joined using butt fusion method as recommended by the pipe manufacturer.

2.3.8.6 Corrugated PE Plastic Pipe

Water tight joints shall be made using a PVC or PE coupling and rubber gaskets as recommended by the pipe manufacturer. Rubber gaskets shall conform to ASTM F 477. Soil tight joints shall conform to the requirements in AASHTO HB-17, Division II, Section 26.4.2.4. (e) for soil tightness and shall be as recommended by the pipe manufacturer.

2.3.8.7 Profile Wall PE Plastic Pipe

Joints shall be gasketed or thermal weld type with integral bell in accordance with ASTM F 894.

2.4 STEEL LADDER

Steel ladder shall be provided where the depth of the manhole exceeds 3.66 m 6 feet. These ladders shall be not less than 406 mm 16 inches in width, with 19 mm 3/4 inch diameter rungs spaced 305 mm 12 inches apart. The two stringers shall be a minimum 10 mm 3/8 inch thick and 63 mm 2-1/2 inches wide. Ladders and inserts shall be galvanized after fabrication in conformance with ASTM A 123/A 123M.

2.6 RESILIENT CONNECTORS

Flexible, watertight connectors used for connecting pipe to manholes and inlets shall conform to ASTM C 923M ASTM C 923.

2.8 EROSION CONTROL RIPRAP

Provide nonerodible rock not exceeding 375 mm 15 inches in its greatest dimension and choked with sufficient small rocks to provide a dense mass with a minimum thickness of [200 mm] as indicated.

PART 3 EXECUTION

3.1 EXCAVATION FOR PIPE CULVERTS, STORM DRAINS, AND DRAINAGE STRUCTURES

Excavation of trenches, and for appurtenances and backfilling for culverts and storm drains, shall be in accordance with the applicable portions of Section 02316A EXCAVATION, TRENCHING, AND BACKFILLING FOR UTILITIES SYSTEMS Section 02300A EARTHWORK and the requirements specified below.

3.1.1 Trenching

The width of trenches at any point below the top of the pipe shall be not greater than the outside diameter of the pipe plus 12 mm inches to permit satisfactory jointing and thorough tamping of the bedding material under and around the pipe. Sheeting and bracing, where required, shall be placed within the trench width as specified. Contractor shall not overexcavate. Where trench widths are exceeded, redesign with a resultant increase in

cost of stronger pipe or special installation procedures will be necessary. Cost of this redesign and increased cost of pipe or installation shall be borne by the Contractor without additional cost to the Government.

3.1.2 Removal of Rock

Rock in either ledge or boulder formation shall be replaced with suitable materials to provide a compacted earth cushion having a thickness between unremoved rock and the pipe of at least 200 mm 8 inches or 13 mm 1/2 inch for each meter foot of fill over the top of the pipe, whichever is greater, but not more than three-fourths the nominal diameter of the pipe. Where bell-and-spigot pipe is used, the cushion shall be maintained under the bell as well as under the straight portion of the pipe. Rock excavation shall be as specified and defined in Section 02316A EXCAVATION, TRENCHING, AND BACKFILLING FOR UTILITIES SYSTEMS.

3.1.3 Removal of Unstable Material

Where wet or otherwise unstable soil incapable of properly supporting the pipe, as determined by the Contracting Officer, is unexpectedly encountered in the bottom of a trench, such material shall be removed to the depth required and replaced to the proper grade with select granular material, compacted as provided in paragraph BACKFILLING. When removal of unstable material is due to the fault or neglect of the Contractor while performing shoring and sheeting, water removal, or other specified requirements, such removal and replacement shall be performed at no additional cost to the Government.

3.2 BEDDING

The bedding surface for the pipe shall provide a firm foundation of uniform density throughout the entire length of the pipe.

3.2.1 Concrete Pipe Requirements

When no bedding class is specified or detailed on the drawings, concrete pipe shall be bedded in a soil foundation accurately shaped and rounded to conform to the lowest one-fourth of the outside portion of circular pipe or to the lower curved portion of pipe arch for the entire length of the pipe or pipe arch. When necessary, the bedding shall be tamped. Bell holes and depressions for joints shall be not more than the length, depth, and width required for properly making the particular type of joint.

3.2.4 Ductile Iron and Cast-Iron Pipe

Bedding for ductile iron and cast-iron pipe shall be as shown on the drawings.

3.2.5 Plastic Pipe

Bedding for PVC and PE pipe shall meet the requirements of ASTM D 2321. Bedding, haunching, and initial backfill shall be either Class IB or II material.

3.3 PLACING PIPE

Each pipe shall be thoroughly examined before being laid; defective or damaged pipe shall not be used. Plastic pipe shall be protected from exposure to direct sunlight prior to laying, if necessary to maintain adequate pipe stiffness and meet installation deflection requirements. Pipelines shall be laid to the grades and alignment indicated. Proper facilities shall be provided for lowering sections of pipe into trenches. Lifting lugs in vertically elongated metal pipe shall be placed in the same vertical plane as the major axis of the pipe. Pipe shall not be laid in water, and pipe shall not be laid when trench conditions or weather are unsuitable for such work. Diversion of drainage or dewatering of trenches during construction shall be provided as necessary. Deflection of installed flexible pipe shall not exceed the following limits:

TYPE OF PIPE	MAXIMUM ALLOWABLE DEFLECTION (%)
Ductile Iron Culvert	3
Plastic	7.5

Not less than 30 days after the completion of backfilling, the Government may perform a deflection test on the entire length of installed flexible pipe using a mandrel or other suitable device. Installed flexible pipe showing deflections greater than those indicated above shall be retested by a run from the opposite direction. If the retest also fails, the suspect pipe shall be replaced.

3.3.1 Concrete, Clay, PVC, Ribbed PVC, Ductile Iron and Cast-Iron Pipe

Laying shall proceed upgrade with spigot ends of bell-and-spigot pipe and tongue ends of tongue-and-groove pipe pointing in the direction of the flow.

3.3.3 Corrugated PE Pipe

Laying shall be with the separate sections joined firmly on a bed shaped to line and grade and shall follow manufacturer's recommendations.

3.3.5 Structural-Plate Steel

Structural plate shall be installed in accordance with ASTM A 807/A 807M. Structural plate shall be assembled in accordance with instructions furnished by the manufacturer. Instructions shall show the position of each plate and the order of assembly. Bolts shall be tightened progressively and uniformly, starting at one end of the structure after all plates are in place. The operation shall be repeated to ensure that all bolts are tightened to meet the torque requirements of 270 Newton meters (200 foot-pounds) 200 foot-pounds plus or minus68 Newton meters (50 foot-pounds). 50 foot-pounds. Any power wrenches used shall be checked by the use of hand torque wrenches or long-handled socket or structural wrenches for amount of torque produced. Power wrenches shall be checked and adjusted frequently as needed, according to type or condition, to ensure proper adjustment to supply the required torque.

3.3.6 Structural-Plate Aluminum

Structural plate shall be assembled in accordance with instructions furnished by the manufacturer. Instructions shall show the position of each plate and the order of assembly. Bolts shall be tightened progressively and uniformly, starting at one end of the structure after all plates are in place. The operation shall be repeated to ensure that all bolts are torqued to a minimum of 136 Newton meters (100 foot-pounds) 100 foot-pounds on aluminum alloy bolts and a minimum of 203 Newton meters (150 foot-pounds) 150 foot-pounds on galvanized steel bolts. Any power wrenches used shall be checked by the use of hand torque wrenches or long-handled socket or structural wrenches for the amount of torque produced. Power wrenches shall be checked and adjusted as frequently as needed, according to type or condition, to ensure that they are in proper adjustment to supply the required torque.

3.3.7 Multiple Culverts

Where multiple lines of pipe are installed, adjacent sides of pipe shall be at least half the nominal pipe diameter or 1 meter 3 feet apart, whichever is less.

3.3.8 Jacking Pipe Through Fills

Methods of operation and installation for jacking pipe through fills shall conform to requirements specified in Volume 1, Chapter 1, Part 4 of AREMA Manual.

3.4 JOINTING

3.4.1 Concrete and Clay Pipe

3.4.1.1 Cement-Mortar Bell-and-Spigot Joint

The first pipe shall be bedded to the established gradeline, with the bell end placed upstream. The interior surface of the bell shall be thoroughly cleaned with a wet brush and the lower portion of the bell filled with mortar as required to bring inner surfaces of abutting pipes flush and even. The spigot end of each subsequent pipe shall be cleaned with a wet brush and uniformly matched into a bell so that sections are closely fitted. After each section is laid, the remainder of the joint shall be filled with mortar, and a bead shall be formed around the outside of the joint with sufficient additional mortar. If mortar is not sufficiently stiff to prevent appreciable slump before setting, the outside of the joint shall be wrapped or bandaged with cheesecloth to hold mortar in place.

3.4.1.2 Cement-Mortar Oakum Joint for Bell-and-Spigot Pipe

A closely twisted gasket shall be made of jute or oakum of the diameter required to support the spigot end of the pipe at the proper grade and to make the joint concentric. Joint packing shall be in one piece of sufficient length to pass around the pipe and lap at top. This gasket shall be thoroughly saturated with neat cement grout. The bell of the pipe shall be thoroughly cleaned with a wet brush, and the gasket shall be laid in the bell for the lower third of the circumference and covered with mortar. The spigot of the pipe shall be thoroughly cleaned with a wet brush, inserted in the bell, and carefully driven home. A small amount of mortar shall be inserted in the annular space for the upper two-thirds of the circumference. The gasket shall be lapped at the top of the pipe and driven home in the annular space with a caulking tool. The remainder of

the annular space shall be filled completely with mortar and beveled at an angle of approximately 45 degrees with the outside of the bell. If mortar is not sufficiently stiff to prevent appreciable slump before setting, the outside of the joint thus made shall be wrapped with cheesecloth. Placing of this type of joint shall be kept at least five joints behind laying operations.

3.4.1.3 Cement-Mortar Diaper Joint for Bell-and-Spigot Pipe

The pipe shall be centered so that the annular space is uniform. The annular space shall be caulked with jute or oakum. Before caulking, the inside of the bell and the outside of the spigot shall be cleaned.

a. Diaper Bands: Diaper bands shall consist of heavy cloth fabric to hold grout in place at joints and shall be cut in lengths that extend one-eighth of the circumference of pipe above the spring line on one side of the pipe and up to the spring line on the other side of the pipe. Longitudinal edges of fabric bands shall be rolled and stitched around two pieces of wire. Width of fabric bands shall be such that after fabric has been securely stitched around both edges on wires, the wires will be uniformly spaced not less than 200 mm 8 inches apart. Wires shall be cut into lengths to pass around pipe with sufficient extra length for the ends to be twisted at top of pipe to hold the band securely in place; bands shall be accurately centered around lower portion of joint.

b. Grout: Grout shall be poured between band and pipe from the high side of band only, until grout rises to the top of band at the spring line of pipe, or as nearly so as possible, on the opposite side of pipe, to ensure a thorough sealing of joint around the portion of pipe covered by the band. Silt, slush, water, or polluted mortar grout forced up on the lower side shall be forced out by pouring, and removed.

c. Remainder of Joint: The remaining unfilled upper portion of the joint shall be filled with mortar and a bead formed around the outside of this upper portion of the joint with a sufficient amount of additional mortar. The diaper shall be left in place. Placing of this type of joint shall be kept at least five joints behind actual laying of pipe. No backfilling around joints shall be done until joints have been fully inspected and approved.

3.4.1.7 Flexible Watertight Joints

Gaskets and jointing materials shall be as recommended by the particular manufacturer in regard to use of lubricants, cements, adhesives, and other special installation requirements. Surfaces to receive lubricants, cements, or adhesives shall be clean and dry. Gaskets and jointing materials shall be affixed to the pipe not more than 24 hours prior to the installation of the pipe, and shall be protected from the sun, blowing dust, and other deleterious agents at all times. Gaskets and jointing materials shall be inspected before installing the pipe; any loose or improperly affixed gaskets and jointing materials shall be removed and replaced. The pipe shall be aligned with the previously installed pipe, and the joint pushed home. If, while the joint is being made the gasket becomes visibly dislocated the pipe shall be removed and the joint remade.

3.4.2 Corrugated Metal Pipe

3.4.2.2 Flexible Watertight, Gasketed Joints

Installation shall be as recommended by the gasket manufacturer for use of lubricants and cements and other special installation requirements. The gasket shall be placed over one end of a section of pipe for half the width of the gasket. The other half shall be doubled over the end of the same pipe. When the adjoining section of pipe is in place, the doubled-over half of the gasket shall then be rolled over the adjoining section. Any unevenness in overlap shall be corrected so that the gasket covers the end of pipe sections equally. Connecting bands shall be centered over adjoining sections of pipe, and rods or bolts placed in position and nuts tightened. Band Tightening: The band shall be tightened evenly, even tension being kept on the rods or bolts, and the gasket; the gasket shall seat properly in the corrugations. Watertight joints shall remain uncovered for a period of time designated, and before being covered, tightness of the nuts shall be measured with a torque wrench. If the nut has tended to loosen its grip on the bolts or rods, the nut shall be retightened with a torque wrench and remain uncovered until a tight, permanent joint is assured.

3.5 DRAINAGE STRUCTURES

3.5.1 Manholes and Inlets

Construction shall be of reinforced concrete, plain concrete, brick, precast reinforced concrete, precast concrete segmental blocks, prefabricated corrugated metal, or bituminous coated corrugated metal; complete with frames and covers or gratings; and with fixed galvanized steel ladders where indicated. Pipe studs and junction chambers of prefabricated corrugated metal manholes shall be fully bituminous-coated and paved when the connecting branch lines are so treated. Pipe connections to concrete manholes and inlets shall be made with flexible, watertight connectors.

3.5.2 Walls and Headwalls

Construction shall be as indicated.

3.6 STEEL LADDER INSTALLATION

Ladder shall be adequately anchored to the wall by means of steel inserts spaced not more than 1.83 m 6 feet vertically, and shall be installed to provide at least 152 mm 6 inches of space between the wall and the rungs. The wall along the line of the ladder shall be vertical for its entire length.

3.7 BACKFILLING

3.7.1 Backfilling Pipe in Trenches

After the pipe has been properly bedded, selected material from excavation or borrow, at a moisture content that will facilitate compaction, shall be placed along both sides of pipe in layers not exceeding 150 mm 6 inches in compacted depth. The backfill shall be brought up evenly on both sides of pipe for the full length of pipe. The fill shall be thoroughly compacted under the haunches of the pipe. Each layer shall be thoroughly compacted with mechanical tampers or rammers. This method of filling and compacting

shall continue until the fill has reached an elevation of at least 300 mm 12 inchesabove the top of the pipe. The remainder of the trench shall be backfilled and compacted by spreading and rolling or compacted by mechanical rammers or tampers in layers not exceeding 12 mm inches. Tests for density shall be made as necessary to ensure conformance to the compaction requirements specified below. Where it is necessary, in the opinion of the Contracting Officer, that sheeting or portions of bracing used be left in place, the contract will be adjusted accordingly. Untreated sheeting shall not be left in place beneath structures or pavements.

3.7.2 Backfilling Pipe in Fill Sections

For pipe placed in fill sections, backfill material and the placement and compaction procedures shall be as specified below. The fill material shall be uniformly spread in layers longitudinally on both sides of the pipe, not exceeding 150 mm 6 inches in compacted depth, and shall be compacted by rolling parallel with pipe or by mechanical tamping or ramming. Prior to commencing normal filling operations, the crown width of the fill at a height of 300 mm12 inches above the top of the pipe shall extend a distance of not less than twice the outside pipe diameter on each side of the pipe or 4 m, 12 feet, whichever is less. After the backfill has reached at least 300 mm 12 inches above the top of the pipe, the remainder of the fill shall be placed and thoroughly compacted in layers not exceeding 12 mm inches.

3.7.3 Movement of Construction Machinery

When compacting by rolling or operating heavy equipment parallel with the pipe, displacement of or injury to the pipe shall be avoided. Movement of construction machinery over a culvert or storm drain at any stage of construction shall be at the Contractor's risk. Any damaged pipe shall be repaired or replaced.

3.7.4 Compaction

3.7.4.1 General Requirements

Cohesionless materials include gravels, gravel-sand mixtures, sands, and gravelly sands. Cohesive materials include clayey and silty gravels, gravel-silt mixtures, clayey and silty sands, sand-clay mixtures, clays, silts, and very fine sands. When results of compaction tests for moisture-density relations are recorded on graphs, cohesionless soils will show straight lines or reverse-shaped moisture-density curves, and cohesive soils will show normal moisture-density curves.

3.7.4.2 Minimum Density

Backfill over and around the pipe and backfill around and adjacent to drainage structures shall be compacted at the approved moisture content to the following applicable minimum density, which will be determined as specified below.

a. Under airfield and heliport pavements, paved roads, streets, parking areas, and similar-use pavements including adjacent shoulder areas, the density shall be not less than 90 percent of maximum density for cohesive material and 95 percent of maximum density for cohesionless material, up to the elevation where

requirements for pavement subgrade materials and compaction shall control.

b. Under unpaved or turfed traffic areas, density shall not be less than 90 percent of maximum density for cohesive material and 95 percent of maximum density for cohesionless material.

c. Under nontraffic areas, density shall be not less than that of the surrounding material.

3.7.5 Determination of Density

Testing shall be the responsibility of the Contractor and performed at no additional cost to the Government. Testing shall be performed by an approved commercial testing laboratory or by the Contractor subject to approval. Tests shall be performed in sufficient number to ensure that specified density is being obtained. Laboratory tests for moisture-density relations shall be made in accordance with ASTM D 1557 except that mechanical tampers may be used provided the results are correlated with those obtained with the specified hand tamper. Field density tests shall be determined in accordance with ASTM D 2167. Test results shall be furnished the Contracting Officer. The calibration checks of both the density and moisture gauges shall be made at the beginning of a job on each different type of material encountered and at intervals as directed.

3.8 PIPELINE TESTING

3.8.2 Deflection Testing

Perform a deflection test on entire length of installed plastic pipeline on completion of work adjacent to and over the pipeline, including leakage tests, backfilling, placement of fill, grading, paving, concreting, and any other superimposed loads. Deflection of pipe in the installed pipeline under external loads shall not exceed 4.5 percent of the average inside diameter of pipe. Determine whether the allowable deflection has been exceeded by use of a pull-through device or a deflection measuring device.

a. Pull-through device: This device shall be a spherical, spheroidal, or elliptical ball, a cylinder, or circular sections fused to a common shaft. Circular sections shall be so spaced on the shaft that distance from external faces of front and back sections will equal or exceed diameter of the circular section. Pull-through device may also be of a design promulgated by the Uni-Bell Plastic Pipe Association, provided that the device meets the applicable requirements specified in this paragraph, including those for diameter of the device. Ball, cylinder, or circular sections shall conform to the following:

(1) A diameter, or minor diameter as applicable, of 95 percent of the average inside diameter of the pipe; tolerance of plus 0.5 percent will be permitted.

(2) A homogeneous material throughout, with a density greater than 1.0 as related to water at 4 degrees C 39.2 degrees F, and a surface Brinell hardness of not less than 150.

(3) Center bored and through bolted with a 6 mm 1/4 inch minimum

diameter steel shaft having a yield strength of not less than 483 MPa 70,000 psi, with eyes or loops at each end for attaching pulling cables.

(4) Each eye or loop shall be suitably backed with a flange or heavy washer such that a pull exerted on opposite end of shaft will produce compression throughout remote end.

b. Deflection measuring device: Sensitive to 1.0 percent of the diameter of the pipe being tested and accurate to 1.0 percent of the indicated dimension. Deflection measuring device shall be approved by the Contracting Officer prior to use.

c. Pull-through device: Pass the pull-through device through each run of pipe, either by pulling it through or flushing it through with water. If the device fails to pass freely through a pipe run, replace pipe which has the excessive deflection and completely retest in same manner and under same conditions as specified.

d. Deflection measuring device procedure: Measure deflections through each run of installed pipe. If deflection readings in excess of 4.5 percent of average inside diameter of pipe are obtained, retest pipe by a run from the opposite direction. If retest continues to show a deflection in excess of 4.5 percent of average inside diameter of pipe, remove pipe which has excessive deflection, replace with new pipe, and completely retest in same manner and under same conditions.

e. Warranty period test: Pipe found to have a deflection of greater than 5 percent of average inside diameter when deflection test is performed just prior to end of one-year warranty period shall be replaced with new pipe and tested as specified for leakage and deflection.

3.9 FIELD PAINTING

After installation, clean steel covers and steel or concrete frames not buried in masonry or concrete to bare metal of mortar, dirt, grease, and other deleterious materials.

-- End of Section --

SECTION 02722A

AGGREGATE BASE COURSE
NAO ModMaster 02/2003

PART 1 GENERAL

1.1 REFERENCES

The publications listed below form a part of this specification to the extent referenced. The publications are referred to in the text by basic designation only.

AMERICAN ASSOCIATION OF STATE HIGHWAY AND TRANSPORTATION OFFICIALS (AASHTO)

AASHTO T 180	(1997) Moisture-Density Relations of Soils Using a 4.54-kg (10-lb) Rammer and an 457 mm (18-in) Drop
AASHTO T 224	(1996) Correction for Coarse Particles in the Soil Compaction Test

AMERICAN SOCIETY FOR TESTING AND MATERIALS (ASTM)

ASTM C 29/C 29M	(1997) Bulk Density ("Unit Weight") and Voids in Aggregates
ASTM C 88	(1999a) Soundness of Aggregates by Use of Sodium Sulfate or Magnesium Sulfate
ASTM C 117	(1995) Materials Finer than 75 micrometer (No. 200) Sieve in Mineral Aggregates by Washing
ASTM C 127	(1988; R 1993el) Specific Gravity and Absorption of Course Aggregate
ASTM C 128	(1997) Specific Gravity and Absorption of Fine Aggregate
ASTM C 131	(1996) Resistance to Degradation of Small-Size Coarse Aggregate by Abrasion and Impact in the Los Angeles Machine
ASTM C 136	(1996a) Sieve Analysis of Fine and Coarse Aggregates
ASTM D 75	(1987; R 1997) Sampling Aggregates
ASTM D 422	(1963; R 1998) Particle-Size Analysis of Soils
ASTM D 1556	(2000) Density and Unit Weight of Soil in

	Place by the Sand-Cone Method
ASTM D 1557	(2000) Laboratory Compaction Characteristics of Soil Using Modified Effort (56,000 ft-lbf/cu. ft. (2,700 kN-m/cu.m.))
ASTM D 2167	(1994) Density and Unit Weight of Soil in Place by the Rubber Balloon Method
ASTM D 2487	(2000) Classification of Soils for Engineering Purposes (Unified Soil Classification System)
ASTM D 2922	(1996el) Density of Soil and Soil-Aggregate in Place by Nuclear Methods (Shallow Depth)
ASTM D 3017	(1988; R 1996el) Water Content of Soil and Rock in Place by Nuclear Methods (Shallow Depth)
ASTM D 4318	(2000) Liquid Limit, Plastic Limit, and Plasticity Index of Soils
ASTM E 11	(1995) Wire-Cloth Sieves for Testing Purposes

VIRGINIA DEPARTMENT OF TRANSPORTATION (VDOT)

VDOT RBS	(January 1994) Road and Bridge SpecificationsRef Title

1.2 DEFINITIONS

For the purposes of this specification, the following definitions apply.

1.2.1 Aggregate Base Course

Aggregate base course (ABC) is well graded, durable aggregate uniformly moistened and mechanically stabilized by compaction.

1.2.3 Degree of Compaction

Degree of compaction shall be expressed as a percentage of the laboratory maximum density obtained by the test procedure presented in ASTM D 1557.

1.5 SAMPLING AND TESTING

Sampling and testing shall be the responsibility of the Contractor. Work requiring testing will not be permitted until the testing laboratory has been inspected and approved. The materials shall be tested to establish compliance with the specified requirements; testing shall be performed at the specified frequency. The Contracting Officer may specify the time and location of the tests. Copies of test results shall be furnished to the Contracting Officer within 24 hours of completion of the tests. In addition to Contractor reporting of test results required by these

specifications, the testing laboratory shall furnish directly to the Resident Contracting Officer, an information copy of each in-place density test and related moisture and calibration results.

1.5.1 Sampling

Samples for laboratory testing shall be taken in conformance with ASTM D 75. When deemed necessary, the sampling will be observed by the Contracting Officer.

1.5.2 Tests

The following tests shall be performed in conformance with the applicable standards listed.

1.5.2.1 Sieve Analysis

Sieve analysis shall be made in conformance with ASTM C 117 and ASTM C 136. Sieves shall conform to ASTM E 11. Particle-size analysis of the soils shall also be completed in conformance with ASTM D 422.

1.5.2.2 Liquid Limit and Plasticity Index

Liquid limit and plasticity index shall be determined in accordance with ASTM D 4318.

1.5.2.3 Moisture-Density Determinations

The maximum density and optimum moisture content shall be determined in accordance with ASTM D 1557.

1.5.2.4 Field Density Tests

Density shall be field measured in accordance with ASTM D 1556. For the method presented in ASTM D 1556 the base plate as shown in the drawing shall be used.

1.5.2.5 Wear Test

Wear tests shall be made on aggregate base course material in conformance with ASTM C 131.

1.5.2.7 Weight of Slag

Weight per cubic meter foot of slag shall be determined in accordance with ASTM C 29/C 29M on the ABC course material.

1.5.3 Testing Frequency

1.5.3.1 Initial Tests

One of each of the following tests shall be performed on the proposed material prior to commencing construction to demonstrate that the proposed material meets all specified requirements when furnished. If materials from more than one source are going to be utilized, this testing shall be completed for each source.

a. Sieve Analysis .

b. Liquid limit and plasticity index.

c. Moisture-density relationship.

d. Wear.

e. Weight per cubic meter foot of Slag.

1.5.3.2 In Place Tests

Each of the following tests shall be performed on samples taken from the placed and compacted ABC. Samples shall be taken and tested at the rates indicated.

a. Density tests shall be performed on every lift of material placed and at a frequency of one set of tests for every 500 square yards, or portion thereof, of completed area.

b. Sieve Analysis shall be performed for every500 metric tons 500 tons, or portion thereof, of material placed.

c. Liquid limit and plasticity index tests shall be performed at the same frequency as the sieve analysis.

1.5.4 Approval of Material

The source of the material shall be selected 30 days prior to the time the material will be required in the work. Tentative approval of material will be based on initial test results. Final approval of the materials will be based on sieve analysis, liquid limit, and plasticity index tests performed on samples taken from the completed and fully compacted ABC.

1.6 WEATHER LIMITATIONS

Construction shall be done when the atmospheric temperature is above 2 degrees C. 35 degrees F. When the temperature falls below 2 degrees C, 35 degrees F, the Contractor shall protect all completed areas by approved methods against detrimental effects of freezing. Completed areas damaged by freezing, rainfall, or other weather conditions shall be corrected to meet specified requirements.

1.7 PLANT, EQUIPMENT, AND TOOLS

All plant, equipment, and tools used in the performance of the work will be subject to approval before the work is started and shall be maintained in satisfactory working condition at all times. The equipment shall be adequate and shall have the capability of producing the required compaction, meeting grade controls, thickness control, and smoothness requirements as set forth herein.

PART 2 PRODUCTS

2.1 AGGREGATES

The ABC shall consist of clean, sound, durable particles of crushed stone,

crushed slag, crushed gravel, crushed recycled concrete, angular sand, or other approved material. ABC shall be free of lumps of clay, organic matter, and other objectionable materials or coatings. The portion retained on the 4.75 mm No. 4 sieve shall be known as coarse aggregate; that portion passing the 4.75 mm No. 4 sieve shall be known as fine aggregate.

2.1.1 Coarse Aggregate

Coarse aggregates shall be angular particles of uniform density. When the coarse aggregate is supplied from more than one source, aggregate from each source shall meet the specified requirements and shall be stockpiled separately.

a. Crushed Gravel: Crushed gravel shall be manufactured by crushing gravels, and shall meet all the requirements specified below.

b. Crushed Stone: Crushed stone shall consist of freshly mined quarry rock, and shall meet all the requirements specified below.

c. Crushed Slag: Crushed slag shall be an air-cooled blast-furnace product having an air dry unit weight of not less than 1045 kg/cubic meter 65 pcf as determined by ASTM C 29/C 29M, and shall meet all the requirements specified below.

2.1.1.1 Aggregate Base Course

ABC coarse aggregate shall not show more than 50 percent loss when subjected to the Los Angeles abrasion test in accordance with ASTM C 131. The amount of flat and elongated particles shall not exceed 30 percent. A flat particle is one having a ratio of width to thickness greater than 3; an elongated particle is one having a ratio of length to width greater than 3. In the portion retained on each sieve specified, the crushed aggregates shall contain at least 50 percent by weight of crushed pieces having two or more freshly fractured faces with the area of each face being at least equal to 75 percent of the smallest midsectional area of the piece. When two fractures are contiguous, the angle between planes of the fractures must be at least 30 degrees in order to count as two fractured faces. Crushed gravel shall be manufactured from gravel particles 50 percent of which, by weight, are retained on the maximum size sieve listed in TABLE 1.

2.1.2 Fine Aggregate

Fine aggregates shall be angular particles of uniform density. When the fine aggregate is supplied from more than one source, aggregate from each source shall meet the specified requirements.

2.1.2.1 Aggregate Base Course

ABC fine aggregate shall consist of screenings, angular sand, crushed recycled concrete fines, or other finely divided mineral matter processed or naturally combined with the coarse aggregate.

2.1.3 Gradation Requirements

The specified gradation requirements shall apply to the completed base course. The aggregates shall have a maximum size of 1.5 mm inches and

shall be continuously well graded within the limits specified in TABLE 1. Sieves shall conform to ASTM E 11.

TABLE 1. GRADATION OF AGGREGATES

Percentage by Weight Passing Square-Mesh Sieve

Sieve Designation	No. 1	No. 2	No. 3
50.0 mm	100	----	----
37.5 mm	70-100	100	----
25.0 mm	45-80	60-100	100
12.5 mm	30-60	30-65	40-70
4.75 mm	20-50	20-50	20-50
2.00 mm	15-40	15-40	15-40
0.425 mm	5-25	5-25	5-25
0.075 mm	0-8	0-8	0-8

TABLE I. GRADATION OF AGGREGATES

Percentage by Weight Passing Square-Mesh Sieve

Sieve Designation	No. 1	No. 2	No. 3
2 inch	100	----	----
1-1/2 inch	70-100	100	----
1 inch	45-80	60-100	100
1/2 inch	30-60	30-65	40-70
No. 4	20-50	20-50	20-50
No. 10	15-40	15-40	15-40
No. 40	5-25	5-25	5-25
No. 200	0-8	0-8	0-8

NOTE 1: Particles having diameters less than 0.02 mm 0.0008 inch shall not be in excess of 3 percent by weight of the total sample tested.

NOTE 2: The values are based on aggregates of uniform specific gravity. If materials from different sources are used for the coarse and fine aggregates, they shall be tested in accordance with ASTM C 127 and ASTM C 128 to determine their specific gravities. If the specific gravities vary by more than 10 percent, the percentages passing the various sieves shall be corrected as directed by the Contracting Officer.

2.1.4 Liquid Limit and Plasticity Index

Liquid limit and plasticity index requirements shall apply to the completed course and shall also apply to any component that is blended to meet the required gradation. The portion of any component or of the completed course passing the 0.425 mm No. 40 sieve shall be either nonplastic or have a liquid limit not greater than 25 and a plasticity index not greater than

5.

PART 3 EXECUTION

3.1 GENERAL REQUIREMENTS

When the ABC is constructed in more than one layer, the previously constructed layer shall be cleaned of loose and foreign matter by sweeping with power sweepers or power brooms, except that hand brooms may be used in areas where power cleaning is not practicable. Adequate drainage shall be provided during the entire period of construction to prevent water from collecting or standing on the working area. Line and grade stakes shall be provided as necessary for control. Grade stakes shall be in lines parallel to the centerline of the area under construction and suitably spaced for string lining.

3.2 OPERATION OF AGGREGATE SOURCES

Aggregates shall be obtained from offsite sources.

3.3 STOCKPILING MATERIAL

Prior to stockpiling of material, storage sites shall be cleared and leveled by the Contractor. All materials, including approved material available from excavation and grading, shall be stockpiled in the manner and at the locations designated. Aggregates shall be stockpiled on the cleared and leveled areas designated by the Contracting Officer to prevent segregation. Materials obtained from different sources shall be stockpiled separately.

3.4 PREPARATION OF UNDERLYING COURSE

Prior to constructing the ABC, the underlying course or subgrade shall be cleaned of all foreign substances. At the time of construction of the ABC, the underlying course shall contain no frozen material. The surface of the underlying course or subgrade shall meet specified compaction and surface tolerances. The underlying course shall conform to Section 02300A EARTHWORK. Ruts or soft yielding spots in the underlying courses, areas having inadequate compaction, and deviations of the surface from the requirements set forth herein shall be corrected by loosening and removing soft or unsatisfactory material and by adding approved material, reshaping to line and grade, and recompacting to specified density requirements. For cohesionless underlying courses containing sands or gravels in harmful quantities, the surface shall be mechanically stabilized prior to placement of the ABC. Stabilization shall be accomplished by mixing ABC into the underlying course and compacting by approved methods. The stabilized material shall be considered as part of the underlying course and shall meet all requirements of the underlying course. The finished underlying course shall not be disturbed by traffic or other operations and shall be maintained by the Contractor in a satisfactory condition until the ABC is placed.

3.5 INSTALLATION

3.5.1 Mixing the Materials

The coarse and fine aggregates shall be mixed in a stationary plant, or in

a traveling plant or bucket loader on an approved paved working area. The Contractor shall make adjustments in mixing procedures or in equipment as directed to obtain true grades, to minimize segregation or degradation, to obtain the required water content, and to insure a satisfactory ABC meeting all requirements of this specification.

3.5.2 Grade Control

Underlying material(s) shall be excavated and prepared at sufficient depth for the required ABC thickness so that the finished ABC with the subsequent surface course will meet the designated grades. The finished and completed ABC shall conform to the lines, grades, and cross sections shown.

3.5.3 Placing

The approved mixed material shall be placed on the prepared subgrade or subbase in layers of uniform thickness with an approved spreader. When a compacted layer 150 mm 6 inches or less in thickness is required, the material shall be placed in a single layer. When a compacted layer in excess of 150 mm 6 inches is required, the material shall be placed in layers of equal thickness. No layer shall exceed 150 mm 6 inches or be less than 75mm 3 inches when compacted. The layers shall be so placed that when compacted they will be true to the grades or levels required with the least possible surface disturbance. Where the ABC is placed in more than one layer, the previously constructed layers shall be cleaned of loose and foreign matter by sweeping with power sweepers, power brooms, or hand brooms, as directed. Such adjustments in placing procedures or equipment shall be made as may be directed to obtain true grades, to minimize segregation and degradation, to adjust the water content, and to insure an acceptable ABC.

3.5.4 Edges of Base Course

The ABC shall be placed so that the completed section will be a minimum of [1.5] [_____] m 5 feet wider, on all sides, than the next layer that will be placed above it. Additionally, approved fill material shall be placed along the outer edges of ABC in sufficient quantities to compact to the thickness of the course being constructed, or to the thickness of each layer in a multiple layer course, allowing in each operation at least a 600 mm 2 foot width of this material to be rolled and compacted simultaneously with rolling and compacting of each layer of ABC. If this base course material is to be placed adjacent to another pavement section, then the layers for both of these sections shall be placed and compacted along this edge at the same time.

3.5.5 Compaction

Each layer of the ABC shall be compacted as specified with approved compaction equipment. Water content shall be maintained during the compaction procedure to the percentage necessary to obtain the specified degree of compaction. Rolling shall begin at the outside edge of the surface and proceed to the center, overlapping on successive trips at least one-half the width of the roller. Alternate trips of the roller shall be slightly different lengths. Speed of the roller shall be such that displacement of the aggregate does not occur. In all places not accessible to the rollers, the mixture shall be compacted with hand-operated power tampers of sufficient size to obtain the specified compaction. Compaction shall continue until each layer has a degree of compaction that is at least

95 percent of laboratory maximum density through the full depth of the layer. The Contractor shall make such adjustments in compacting or finishing procedures as may be directed to obtain true grades, to minimize segregation and degradation, to reduce or increase water content, and to ensure a satisfactory ABC. Any materials that are found to be unsatisfactory shall be removed and replaced with satisfactory material or reworked, as directed, to meet the requirements of this specification. Construction of overlying materials shall not proceed until test results are approved.

3.5.6 Thickness

Compacted thickness of the aggregate course shall be as indicated. No individual layer shall exceed 150 mm 6 inches nor be less than 75 mm 3 inches in compacted thickness. The total compacted thickness of the ABC course shall be within 13 mm 1/2 inch of the thickness indicated. Where the measured thickness is more than 13 mm 1/2 inch deficient, such areas shall be corrected by scarifying, adding new material of proper gradation, reblading, and recompacting as directed. Where the measured thickness is more than 13 mm 1/2 inch thicker than indicated, the course shall be considered as conforming to the specified thickness requirements, except that reduction of overlying materials thicknesses shall not be allowed as a result. Average job thickness shall be the average of all thickness measurements taken for the job, but shall be within 6 mm 1/4 inch of the thickness indicated. The total thickness of the ABC course shall be measured at intervals in such a manner as to ensure one measurement for each 500 square meters yards of base course. Measurements shall be made in 75 mm 3 inch diameter test holes penetrating the base course.

3.5.8 Finishing

The surface of the top layer of ABC shall be finished after final compaction by cutting any overbuild to grade and rolling with a steel-wheeled roller. Thin layers of material shall not be added to the top layer of base course to meet grade. If the elevation of the top layer of ABC is 13 mm 1/2 inch or more below grade, then the top layer shall be scarified to a depth of at least 75 mm 3 inches and new material shall be blended in and compacted to bring to grade. Alternatively, the thickness of the overlying material layer may be increased by an equal dimension, at the approval of the Contracting Officer. Adjustments to rolling and finishing procedures shall be made as directed to minimize segregation and degradation, obtain grades, maintain moisture content, and insure an acceptable base course. Should the surface become rough, corrugated, uneven in texture, or traffic marked prior to completion, the unsatisfactory portion shall be scarified, reworked and recompacted or it shall be replaced as directed.

3.5.9 Smoothness

The surface of the top layer shall show no deviations in excess of 10 mm 3/8 inch when tested with a [3.05] [3.66] meter 10 foot straightedge. Measurements shall be taken in successive positions parallel to the centerline of the area to be paved. Measurements shall also be taken perpendicular to the centerline at [15] [_____] meter 100 footintervals. Deviations exceeding this amount shall be corrected by removing material and replacing with new material, or by reworking existing material and compacting it to meet these specifications, or by increasing the thickness of the overlying material layer as approved by the Contracting Officer.

3.6 TRAFFIC

Completed portions of the ABC course may be opened to limited traffic, provided there is no marring or distorting of the surface by the traffic. Heavy equipment shall not be permitted except when necessary to construction, and then the area shall be protected against marring or damage to the completed work.

3.7 MAINTENANCE

The ABC shall be maintained in a satisfactory condition until the full pavement section is completed and accepted. Maintenance shall include immediate repairs to any defects and shall be repeated as often as necessary to keep the area intact. Any ABC that is not paved over prior to the onset of winter, shall be retested to verify that it still complies with the requirements of this specification. Any area of ABC that is damaged shall be reworked or replaced as necessary to comply with this specification.

3.8 DISPOSAL OF UNSATISFACTORY MATERIALS

Any unsuitable materials that must be removed shall be disposed of off of Government property. No additional payments will be made for materials that must be replaced.

-- End of Section --

SECTION 02741A

HOT-MIX ASPHALT (HMA) FOR ROADS
09/99

PART 1 GENERAL

1.1 REFERENCES

The publications listed below form a part of this specification to the extent referenced. The publications are referred to in the text by basic designation only.

AMERICAN ASSOCIATION OF STATE HIGHWAY AND TRANSPORTATION OFFICIALS (AASHTO)

AASHTO MP 1a	(2002) Performance Graded Asphalt Binder
AASHTO MP 2	(1998; Interim 1999) Superpave Volumetric Mix Design
AASHTO TP53	(1998; Interim 1999) Determining Asphalt Content of Hot Mix Asphalt by the Ignition Method

AMERICAN SOCIETY FOR TESTING AND MATERIALS (ASTM)

ASTM C 29/C 29M	(1997) Bulk Density ("Unit Weight") and Voids in Aggregates
ASTM C 88	(1999a) Soundness of Aggregates by Use of Sodium Sulfate or Magnesium Sulfate
ASTM C 117	(1995) Materials Finer than 75 micrometer (No. 200) Sieve in Mineral Aggregates by Washing
ASTM C 131	(1996) Resistance to Degradation of Small-Size Coarse Aggregate by Abrasion and Impact in the Los Angeles Machine
ASTM C 136	(1996a) Sieve Analysis of Fine and Coarse Aggregates
ASTM C 566	(1997) Evaporable Total Moisture Content of Aggregate by Drying
ASTM C 1252	(1998) Uncompacted Void Content of Fine Aggregate (as Influenced by Particle Shape, Surface Texture, and Grading)
ASTM D 140	(1998) Sampling Bituminous Materials

ASTM D 242	(1995) Mineral Filler for Bituminous Paving Mixtures
ASTM D 946	(1999) Penetration-Graded Asphalt Cement for Use in Pavement Construction
ASTM D 995	(1995b) Mixing Plants for Hot-Mixed, Hot-Laid Bituminous Paving Mixtures
ASTM D 1461	(1985)) Moisture or Volatile Distillates in Bituminous Paving Mixtures
ASTM D 1559	(1989) Resistance to Plastic Flow of Bituminous Mixtures Using Marshall Apparatus
ASTM D 2041	(1995) Theoretical Maximum Specific Gravity and Density of Bituminous Paving Mixtures
ASTM D 2172	(1995) Quantitative Extraction of Bitumen from Bituminous Paving Mixtures
ASTM D 2419	(1995) Sand Equivalent Value of Soils and Fine Aggregate
ASTM D 2489	(1984; R 1994el) Degree of Particle Coating of Bituminous-Aggregate Mixtures
ASTM D 2726	(1996el) Bulk Specific Gravity and Density of Non-Absorptive Compacted Bituminous Mixture
ASTM D 2950	(1997) Density of Bituminous Concrete in Place by Nuclear Method
ASTM D 3381	(1999) Viscosity-Graded Asphalt Cement for Use in Pavement Construction
ASTM D 3665	(1999) Random Sampling of Construction Materials
ASTM D 3666	(1998) Minimum Requirements for Agencies Testing and Inspecting Bituminous Paving Materials
ASTM D 4125	(1994el)Asphalt Content of Bituminous Mixtures by the Nuclear Method
ASTM D 4791	(1999) Flat Particles, Elongated Particles, or Flat and Elongated Particles in Coarse Aggregate
ASTM D 4867/D 4867M	(1996) Effect of Moisture on Asphalt Concrete Paving Mixtures
ASTM D 5444	(1998) Mechanical Size Analysis of

	Extracted Aggregate
ASTM D 6307	(1998) Asphalt Content of Hot Mix Asphalt by Ignition Method

ASPHALT INSTITUTE (AI)

AI MS-02	(1997) Mix Design Methods for Asphalt Concrete and Other Hot-Mix Types
AI MS-22	(1998; 2nd Edition) Construction of Hot-Mix Asphalt Pavements

STATE OF CALIFORNIA DEPARTMENT OF TRANSPORTATION (CDT)

CDT Test 526	(1978) Operation of California Profilograph and Evaluation of Profiles

U.S. ARMY CORPS OF ENGINEERS (USACE)

COE CRD-C 171	(1995) Test Method for Determining Percentage of Crushed Particles in Aggregate

NEW YORK STATE DEPARTMENT OF TRANSPORTATION (NYSDOT)

NYSDOT	2002 Standard Specifications

1.2 DESCRIPTION OF WORK

The work shall consist of pavement courses composed of mineral aggregate and asphalt material heated and mixed in a central mixing plant and placed on a prepared course. HMA designed and constructed in accordance with this section shall conform to the lines, grades, thicknesses, and typical cross sections shown on the drawings. Each course shall be constructed to the depth, section, or elevation required by the drawings and shall be rolled, finished, and approved before the placement of the next course.

1.3 SUBMITTALS

Government approval is required for submittals with a "G" designation; submittals not having a "G" designation are for information only. When used, a designation following the "G" designation identifies the office that will review the submittal for the Government. The following shall be submitted in accordance with Section 01330 SUBMITTAL PROCEDURES:

SD-03 Product Data

Mix Design; G.

Proposed JMF.

Contractor Quality Control; G.

Quality control plan.

SD-06 Test Reports

Aggregates; G.

Aggregate test results.

SD-07 Certificates

Asphalt Cement Binder; G.

Copies of certified test data.

1.6 ASPHALT MIXING PLANT

Plants used for the preparation of hot-mix asphalt shall conform to the requirements of ASTM D 995 with the following changes:

a. Truck Scales. The asphalt mixture shall be weighed on approved certified scales at the Contractor's expense. Scales shall be inspected and sealed at least annually by an approved calibration laboratory.

b. Testing Facilities. The Contractor shall provide laboratory facilities at the plant for the use of the Government's acceptance testing and the Contractor's quality control testing.

c. Inspection of Plant. The Contracting Officer shall have access at all times, to all areas of the plant for checking adequacy of equipment; inspecting operation of the plant; verifying weights, proportions, and material properties; checking the temperatures maintained in the preparation of the mixtures and for taking samples. The Contractor shall provide assistance as requested, for the Government to procure any desired samples.

d. Storage Bins. Use of storage bins for temporary storage of hot-mix asphalt will be permitted as follows:

(1) The asphalt mixture may be stored in non-insulated storage bins for a period of time not exceeding 3 hours.

(2) The asphalt mixture may be stored in insulated storage bins for a period of time not exceeding 8 hours. The mix drawn from bins shall meet the same requirements as mix loaded directly into trucks.

1.7 HAULING EQUIPMENT

Trucks used for hauling hot-mix asphalt shall have tight, clean, and smooth metal beds. To prevent the mixture from adhering to them, the truck beds shall be lightly coated with a minimum amount of paraffin oil, lime solution, or other approved material. Petroleum based products shall not be used as a release agent. Each truck shall have a suitable cover to protect the mixture from adverse weather. When necessary to ensure that the mixture will be delivered to the site at the specified temperature, truck beds shall be insulated or heated and covers (tarps) shall be securely fastened.

1.8 ASPHALT PAVERS

Asphalt pavers shall be self-propelled, with an activated screed, heated as necessary, and shall be capable of spreading and finishing courses of hot-mix asphalt which will meet the specified thickness, smoothness, and grade. The paver shall have sufficient power to propel itself and the hauling equipment without adversely affecting the finished surface.

1.8.1 Receiving Hopper

The paver shall have a receiving hopper of sufficient capacity to permit a uniform spreading operation. The hopper shall be equipped with a distribution system to place the mixture uniformly in front of the screed without segregation. The screed shall effectively produce a finished surface of the required evenness and texture without tearing, shoving, or gouging the mixture.

1.8.2 Automatic Grade Controls

If an automatic grade control device is used, the paver shall be equipped with a control system capable of automatically maintaining the specified screed elevation. The control system shall be automatically actuated from either a reference line and/or through a system of mechanical sensors or sensor-directed mechanisms or devices which will maintain the paver screed at a predetermined transverse slope and at the proper elevation to obtain the required surface. The transverse slope controller shall be capable of maintaining the screed at the desired slope within plus or minus 0.1 percent. A transverse slope controller shall not be used to control grade. The controls shall be capable of working in conjunction with any of the following attachments:

a. Ski-type device of not less than9.14 m 30 feet in length.

b. Taut stringline set to grade.

c. Short ski or shoe for joint matching.

d. Laser control.

1.9 ROLLERS

Rollers shall be in good condition and shall be operated at slow speeds to avoid displacement of the asphalt mixture. The number, type, and weight of rollers shall be sufficient to compact the mixture to the required density while it is still in a workable condition. Equipment which causes excessive crushing of the aggregate shall not be used.

1.10 WEATHER LIMITATIONS

The hot-mix asphalt shall not be placed upon a wet surface or when the surface temperature of the underlying course is less than specified in Table 1. The temperature requirements may be waived by the Contracting Officer, if requested; however, all other requirements, including compaction, shall be met.

Table 1. Surface Temperature Limitations of Underlying Course

Mat Thickness, mm	Degrees C

Table 1. Surface Temperature Limitations of Underlying Course

Mat Thickness, mm	Degrees C
75 or greater	4
Less than 75	7

Table 1. Surface Temperature Limitations of Underlying Course

Mat Thickness, inches	Degrees F
3 or greater	40
Less than 3	45

PART 2 PRODUCTS

2.1 AGGREGATES

Aggregates shall consist of crushed stone, crushed gravel, crushed slag, screenings, natural sand and mineral filler, as required. The portion of material retained on the4.75 mm No. 4 sieve is coarse aggregate. The portion of material passing the4.75 mm No. 4 sieve and retained on the0.075 mm No. 200 sieve is fine aggregate. The portion passing the0.075 mm No. 200 sieve is defined as mineral filler. All aggregate test results and samples shall be submitted to the Contracting Officer at least 14 days prior to start of construction.

2.1.1 Coarse Aggregate

Coarse aggregate shall consist of sound, tough, durable particles, free from films of material that would prevent thorough coating and bonding with the asphalt material and free from organic matter and other deleterious substances. All individual coarse aggregate sources shall meet the following requirements:

a. The percentage of loss shall not be greater than 40 percent after 500 revolutions when tested in accordance with ASTM C 131.

b. The percentage of loss shall not be greater than 18 percent after five cycles when tested in accordance with ASTM C 88 using magnesium sulfate or 12 percent when using sodium sulfate.

c. At least 75 percent by weight of coarse aggregate shall have at least two or more fractured faces when tested in accordance with COE CRD-C 171. Fractured faces shall be produced by crushing.

d. The particle shape shall be essentially cubical and the aggregate shall not contain more than 20% percent, by weight, of flat and elongated particles (3:1 ratio of maximum to minimum) when tested in accordance with ASTM D 4791.

e. Slag shall be air-cooled, blast furnace slag, and shall have a compacted weight of not less than1200 kg/cubic meter 75 lb/cu ft when tested in accordance with ASTM C 29/C 29M.

2.1.2 Fine Aggregate

Fine aggregate shall consist of clean, sound, tough, durable particles. The aggregate particles shall be free from coatings of clay, silt, or any objectionable material and shall contain no clay balls. All individual fine aggregate sources shall have a sand equivalent value not less than 45 when tested in accordance with ASTM D 2419.

The fine aggregate portion of the blended aggregate shall have an uncompacted void content not less than 43.0 percent when tested in accordance with ASTM C 1252 Method A.

2.1.3 Mineral Filler

Mineral filler shall be nonplastic material meeting the requirements of ASTM D 242.

2.1.4 Aggregate Gradation

The combined aggregate gradation shall conform to gradations specified in Table 2, when tested in accordance with ASTM C 136 and ASTM C 117, and shall not vary from the low limit on one sieve to the high limit on the adjacent sieve or vice versa, but grade uniformly from coarse to fine.

Table 2. Aggregate Gradations

Sieve Size, mm	Gradation 1 Percent Passing by Mass	Gradation 2 Percent Passing by Mass	Gradation 3 Percent Passing
25.0	100	---	---
19.0	76-96	100	---
12.5	68-88	76-96	100
9.5	60-82	69-89	76-96
4.75	45-67	53-73	58-78
2.36	32-54	38-60	40-60
1.18	22-44	26-48	28-48
0.60	15-35	18-38	18-38
0.30	9-25	11-27	11-27
0.15	6-18	6-18	6-18
0.075	3-6	3-6	3-6

Table 2. Aggregate Gradations

Sieve Size, inch	Gradation 1 Percent Passing by Mass	Gradation 2 Percent Passing by Mass	Gradation 3 Percent Passing by Mass
1	100	---	---
3/4	76-96	100	---
1/2	68-88	76-96	100
3/8	60-82	69-89	76-96
No. 4	45-67	53-73	58-78
No. 8	32-54	38-60	40-60
No. 16	22-44	26-48	28-48

Table 2. Aggregate Gradations

Sieve Size, inch	Gradation 1 Percent Passing by Mass	Gradation 2 Percent Passing by Mass	Gradation 3 Percent Passing by Mass
No. 30	15-35	18-38	18-38
No. 50	9-25	11-27	11-27
No. 100	6-18	6-18	6-18
No. 200	3-6	3-6	3-6

2.2 ASPHALT CEMENT BINDER

Asphalt cement binder shall conform to NYSDOT Standards ASTM D 3381 Table 2, Viscosity Grade AC-20, whichever is more stringent or applicable. Test data indicating grade certification shall be provided by the supplier at the time of delivery of each load to the mix plant. Copies of these certifications shall be submitted to the Contracting Officer. The supplier is defined as the last source of any modification to the binder. The Contracting Officer may sample and test the binder at the mix plant at any time before or during mix production. Samples for this verification testing shall be obtained by the Contractor in accordance with ASTM D 140 and in the presence of the Contracting Officer. These samples shall be furnished to the Contracting Officer for the verification testing, which shall be at no cost to the Contractor. Samples of the asphalt cement specified shall be submitted for approval not less than 14 days before start of the test section.

2.3 MIX DESIGN

The Contractor shall develop the mix design. The asphalt mix shall be composed of a mixture of well-graded aggregate, mineral filler if required, and asphalt material. The aggregate fractions shall be sized, handled in separate size groups, and combined in such proportions that the resulting mixture meets the grading requirements of the job mix formula (JMF). No hot-mix asphalt for payment shall be produced until a JMF has been approved. The hot-mix asphalt shall be designed using procedures contained in AI MS-02 and the criteria shown in Table 3. If the Tensile Strength Ratio (TSR) of the composite mixture, as determined by ASTM D 4867/D 4867M is less than 75, the aggregates shall be rejected or the asphalt mixture treated with an approved anti-stripping agent. The amount of anti-stripping agent added shall be sufficient to produce a TSR of not less than 75. If an antistrip agent is required, it shall be provided by the Contractor at no additional cost. Sufficient materials to produce90 kg 200 pound of blended mixture shall be provided to the Contracting Officer for verification of mix design at least 14 days prior to construction of test section.

At the option of the contractor a currently used DOT superpave hot mix may be used in lieu of developing a new hot mix design study as described herein. The superpave volumetric mix shall be designed in accordance with AASHTO MP 2.

2.3.1 JMF Requirements

The job mix formula shall be submitted in writing by the Contractor for approval at least 14 days prior to the start of the test section and shall include as a minimum:

a. Percent passing each sieve size.

b. Percent of asphalt cement.

c. Percent of each aggregate and mineral filler to be used.

d. Asphalt viscosity grade, penetration grade, or performance grade.

e. Number of blows of hammer per side of molded specimen.

f. Laboratory mixing temperature.

g. Lab compaction temperature.

h. Temperature-viscosity relationship of the asphalt cement.

i. Plot of the combined gradation on the 0.45 power gradation chart, stating the nominal maximum size.

j. Graphical plots of stability, flow, air voids, voids in the mineral aggregate, and unit weight versus asphalt content as shown in AI MS-02.

k. Specific gravity and absorption of each aggregate.

l. Percent natural sand.

m. Percent particles with 2 or more fractured faces (in coarse aggregate).

n. Fine aggregate angularity.

o. Percent flat or elongated particles (in coarse aggregate).

p. Tensile Strength Ratio(TSR).

q. Antistrip agent (if required) and amount.

r. List of all modifiers and amount.

s. Percentage and properties (asphalt content, binder properties, and aggregate properties) of reclaimed asphalt pavement (RAP) in accordance with paragraph RECYCLED HOT-MIX ASPHALT, if RAP is used.

Table 3. Marshall Design Criteria

Test Property	75 Blow Mix	50 Blow Mix
Stability, newtons minimum	*8000	*4450
Flow, 0.25 mm	8-16	8-18
Air voids, percent	3-5	3-5

Table 3. Marshall Design Criteria

Test Property	75 Blow Mix	50 Blow Mix
Percent Voids in mineral aggregate (VMA), (minimum)		
Gradation 1	13.0	13.0
Gradation 2	14.0	14.0
Gradation 3	15.0	15.0
TSR, minimum percent	75	75

Table 3. Marshall Design Criteria

Test Property	75 Blow Mix	50 Blow Mix
Stability, pounds minimum	*1800	*1000
Flow, 0.01 inch	8-16	8-18
Air voids, percent	3-5	3-5
Percent Voids in mineral aggregate VMA, (minimum)		
Gradation 1	13.0	13.0
Gradation 2	14.0	14.0
Gradation 3	15.0	15.0
TSR, minimum percent	75	75

* This is a minimum requirement. The average during construction shall be significantly higher than this number to ensure compliance with the specifications.
** Calculate VMA in accordance with AI MS-02, based on ASTM D 2726 bulk specific gravity for the aggregate.

2.3.2 Adjustments to Field JMF

The Laboratory JMF for each mixture shall be in effect until a new formula is approved in writing by the Contracting Officer. Should a change in sources of any materials be made, a new laboratory jmf design shall be performed and a new JMF approved before the new material is used. The Contractor will be allowed to adjust the Laboratory JMF within the limits specified below to optimize mix volumetric properties with the approval of the Contracting Officer. Adjustments to the Laboratory JMF shall be applied to the field (plant) established JMF and limited to those values as shown. Adjustments shall be targeted to produce or nearly produce 4 percent voids total mix (VTM).

TABLE 4. Field (Plant) Established JMF Tolerances

Sieves	Adjustments (plus or minus), percent

TABLE 4. Field (Plant) Established JMF Tolerances

Sieves	Adjustments (plus or minus), percent
12.5 mm	3
4.75 mm	3
2.36 mm	3
0.075 mm	1
Binder Content	0.4

TABLE 4. Field (Plant) Established JMF Tolerances

Sieves	Adjustments (plus or minus), percent
No. 4	3
No. 8	3
No. 200	1
Binder Content	0.40

If adjustments are needed that exceed these limits, a new mix design shall be developed. Tolerances given above may permit the aggregate grading to be outside the limits shown in Table 2; while not desirable, this is acceptable.

2.4 RECYCLED HOT MIX ASPHALT

Recycled HMA shall consist of reclaimed asphalt pavement (RAP), coarse aggregate, fine aggregate, mineral filler, and asphalt cement. The RAP shall be of a consistent gradation and asphalt content and properties. When RAP is fed into the plant, the maximum RAP chunk size shall not exceed 50 mm. 2 inches. The recycled HMA mix shall be designed using procedures contained in AI MS-02 and AI MS-22. The job mix shall meet the requirements of paragraph MIX DESIGN. The amount of RAP shall not exceed 30 percent.

2.4.1 RAP Aggregates and Asphalt Cement

The blend of aggregates used in the recycled mix shall meet the requirements of paragraph AGGREGATES. The percentage of asphalt in the RAP shall be established for the mixture design according to ASTM D 2172 using the appropriate dust correction procedure.

2.4.2 RAP Mix

The blend of new asphalt cement and the RAP asphalt binder shall meet the viscosity requirements in paragraph ASPHALT CEMENT BINDER. The virgin asphalt cement shall not be more than two standard asphalt material grades different than that specified in paragraph ASPHALT CEMENT BINDER.

PART 3 EXECUTION

3.1 PREPARATION OF ASPHALT BINDER MATERIAL

The asphalt cement material shall be heated avoiding local overheating and providing a continuous supply of the asphalt material to the mixer at a uniform temperature. The temperature of unmodified asphalts shall be no more than 160 degrees C 325 degrees F when added to the aggregates. Modified asphalts shall be no more than 174 degrees C 350 degrees F when added to the aggregates.

3.2 PREPARATION OF MINERAL AGGREGATE

The aggregate for the mixture shall be heated and dried prior to mixing. No damage shall occur to the aggregates due to the maximum temperature and rate of heating used. The temperature of the aggregate and mineral filler shall not exceed175 degrees C 350 degrees F when the asphalt cement is added. The temperature shall not be lower than is required to obtain complete coating and uniform distribution on the aggregate particles and to provide a mixture of satisfactory workability.

3.3 PREPARATION OF HOT-MIX ASPHALT MIXTURE

The aggregates and the asphalt cement shall be weighed or metered and introduced into the mixer in the amount specified by the JMF. The combined materials shall be mixed until the aggregate obtains a uniform coating of asphalt binder and is thoroughly distributed throughout the mixture. Wet mixing time shall be the shortest time that will produce a satisfactory mixture, but no less than 25 seconds for batch plants. The wet mixing time for all plants shall be established by the Contractor, based on the procedure for determining the percentage of coated particles described in ASTM D 2489, for each individual plant and for each type of aggregate used. The wet mixing time will be set to at least achieve 95 percent of coated particles. The moisture content of all hot-mix asphalt upon discharge from the plant shall not exceed 0.5 percent by total weight of mixture as measured by ASTM D 1461.

3.4 PREPARATION OF THE UNDERLYING SURFACE

Immediately before placing the hot mix asphalt, the underlying course shall be cleaned of dust and debris. A prime coat and/or tack coat shall be applied in accordance with the contract specifications.

3.7 TRANSPORTING AND PLACING

3.7.1 Transporting

The hot-mix asphalt shall be transported from the mixing plant to the site in clean, tight vehicles. Deliveries shall be scheduled so that placing and compacting of mixture is uniform with minimum stopping and starting of the paver. Adequate artificial lighting shall be provided for night placements. Hauling over freshly placed material will not be permitted until the material has been compacted as specified, and allowed to cool to 60 degrees C. 140 degrees F. To deliver mix to the paver, the Contractor shall use a material transfer vehicle which shall be operated to produce continuous forward motion of the paver.

3.7.2 Placing

The mix shall be placed and compacted at a temperature suitable for obtaining density, surface smoothness, and other specified requirements. Upon arrival, the mixture shall be placed to the full width by an asphalt paver; it shall be struck off in a uniform layer of such depth that, when the work is completed, it shall have the required thickness and conform to the grade and contour indicated. The speed of the paver shall be regulated to eliminate pulling and tearing of the asphalt mat. Unless otherwise permitted, placement of the mixture shall begin along the centerline of a crowned section or on the high side of areas with a one-way slope. The mixture shall be placed in consecutive adjacent strips having a minimum

width of3 m. 10 feet. The longitudinal joint in one course shall offset the longitudinal joint in the course immediately below by at least300 mm; 1 foot; however, the joint in the surface course shall be at the centerline of the pavement. Transverse joints in one course shall be offset by at least3 m 10 feet from transverse joints in the previous course. Transverse joints in adjacent lanes shall be offset a minimum of 3 m. 10 feet. On isolated areas where irregularities or unavoidable obstacles make the use of mechanical spreading and finishing equipment impractical, the mixture may be spread and luted by hand tools.

3.8 COMPACTION OF MIXTURE

After placing, the mixture shall be thoroughly and uniformly compacted by rolling. The surface shall be compacted as soon as possible without causing displacement, cracking or shoving. The sequence of rolling operations and the type of rollers used shall be at the discretion of the Contractor. The speed of the roller shall, at all times, be sufficiently slow to avoid displacement of the hot mixture and be effective in compaction. Any displacement occurring as a result of reversing the direction of the roller, or from any other cause, shall be corrected at once. Sufficient rollers shall be furnished to handle the output of the plant. Rolling shall continue until the surface is of uniform texture, true to grade and cross section, and the required field density is obtained. To prevent adhesion of the mixture to the roller, the wheels shall be kept properly moistened but excessive water will not be permitted. In areas not accessible to the roller, the mixture shall be thoroughly compacted with hand tampers. Any mixture that becomes loose and broken, mixed with dirt, contains check-cracking, or is in any way defective shall be removed full depth, replaced with fresh hot mixture and immediately compacted to conform to the surrounding area. This work shall be done at the Contractor's expense. Skin patching will not be allowed.

3.9 JOINTS

The formation of joints shall be made ensuring a continuous bond between the courses and to obtain the required density. All joints shall have the same texture as other sections of the course and meet the requirements for smoothness and grade.

3.9.1 Transverse Joints

The roller shall not pass over the unprotected end of the freshly laid mixture, except when necessary to form a transverse joint. When necessary to form a transverse joint, it shall be made by means of placing a bulkhead or by tapering the course. The tapered edge shall be cut back to its full depth and width on a straight line to expose a vertical face prior to placing material at the joint . The cutback material shall be removed from the project. In both methods, all contact surfaces shall be given a light tack coat of asphalt material before placing any fresh mixture against the joint.

3.9.2 Longitudinal Joints

Longitudinal joints which are irregular, damaged, uncompacted, cold (less than80 degrees C 175 degrees F at the time of placing adjacent lanes), or otherwise defective, shall be cut back a minimum of50 mm 2 inches from the edge with a cutting wheel to expose a clean, sound vertical surface for the full depth of the course. All cutback material shall be removed from the

project. All contact surfaces shall be given a light tack coat of asphalt material prior to placing any fresh mixture against the joint. The Contractor will be allowed to use an alternate method if it can be demonstrated that density, smoothness, and texture can be met.

3.10 CONTRACTOR QUALITY CONTROL

3.10.1 General Quality Control Requirements

The Contractor shall develop an approved Quality Control Plan. Hot-mix asphalt for payment shall not be produced until the quality control plan has been approved. The plan shall address all elements which affect the quality of the pavement including, but not limited to:

a. Mix Design

b. Aggregate Grading

c. Quality of Materials

d. Stockpile Management

e. Proportioning

f. Mixing and Transportation

g. Mixture Volumetrics

h. Moisture Content of Mixtures

i. Placing and Finishing

j. Joints

k. Compaction

l.Surface Smoothness

-- End of Section --

SECTION 02921A

SEEDING
11/02

PART 1 GENERAL

1.1 REFERENCES

The publications listed below form a part of this specification to the extent referenced. The publications are referred to in the text by basic designation only.

AMERICAN SOCIETY FOR TESTING AND MATERIALS (ASTM)

ASTM C 602	(1995a) Agricultural Liming Materials
ASTM D 2028	(1976; R 1997) Cutback Asphalt (Rapid-Curing Type)
ASTM D 4972	(2001) pH of Soils
ASTM D 5268	(1992; R 1997) Topsoil Used for Landscaping Purposes
ASTM D 5883	(1996el) Use of Rotary Kiln Produced Expanded Shale, Clay or Slate (ESCS) as a Mineral Amendment in Topsoil Used for Landscaping and Related Purposes
ASTM D 977	(1998) Emulsified Asphalt

U.S. DEPARTMENT OF AGRICULTURE (USDA)

AMS Seed Act	(1995) Federal Seed Act Regulations Part 201

1.2 SUBMITTALS

Government approval is required for submittals with a "G" designation; submittals not having a "G" designation are for information only. When used, a designation following the "G" designation identifies the office that will review the submittal for the Government. The following shall be submitted in accordance with Section 01330 SUBMITTAL PROCEDURES:

SD-03 Product Data

Chemical Treatment Material

Manufacturer's literature including physical characteristics, application and installation instructions for equipment, surface erosion control material and chemical treatment material.

A listing of equipment to be used for the seeding operation.

SD-06 Test Reports

Soil Test

Certified reports of inspections and laboratory tests, prepared by an independent testing agency, including analysis and interpretation of test results. Each report shall be properly identified. Test methods used and compliance with recognized test standards shall be described.

SD-07 Certificates

Seed
Topsoil
pH Adjuster
Fertilizer
Organic Material
Soil Conditioner
Mulch
Pesticide

Prior to the delivery of materials, certificates of compliance attesting that materials meet the specified requirements. Certified copies of the material certificates shall include the following:

a. Seed. Classification, botanical name, common name, percent pure live seed, minimum percent germination and hard seed, maximum percent weed seed content, and date tested.

b. Topsoil. Particle size, pH, organic matter content, textural class, soluble salts, chemical and mechanical analyses.

c. pH Adjuster. Calcium carbonate equivalent and sieve analysis.

d. Fertilizer. Chemical analysis and composition percent.

e. Organic Material: Composition and source.

f. Soil Conditioner: Composition and source.

g. Mulch: Composition and source.

h. Asphalt Adhesive: Composition.

i. Pesticide. EPA registration number and registered uses.

1.3 SOURCE INSPECTION

The source of delivered topsoil shall be subject to inspection.

1.4 DELIVERY, INSPECTION, STORAGE, AND HANDLING

1.4.1 Delivery

A delivery schedule shall be provided at least 10 calendar days prior to

the first day of delivery.

1.4.1.1 Delivered Topsoil

Prior to the delivery of any topsoil, its availability shall be verified in paragraph TOPSOIL. A soil test shall be provided for topsoil delivered to the site.

1.4.1.2 Soil Amendments

Soil amendments shall be delivered to the site in the original, unopened containers bearing the manufacturer's chemical analysis. In lieu of containers, soil amendments may be furnished in bulk. A chemical analysis shall be provided for bulk deliveries.

1.4.1.3 Pesticides

Pesticide material shall be delivered to the site in the original, unopened containers bearing legible labels indicating the EPA registration number and the manufacturer's registered uses.

1.4.2 Inspection

Seed shall be inspected upon arrival at the job site for conformity to species and quality. Seed that is wet, moldy, or bears a test date five months or older, shall be rejected. Other materials shall be inspected for compliance with specified requirements. The following shall be rejected: open soil amendment containers or wet soil amendments; topsoil that contains slag, cinders, stones, lumps of soil, sticks, roots, trash or other material over a minimum40 mm 1-1/2 inch diameter; and topsoil that contains viable plants and plant parts. Unacceptable materials shall be removed from the job site.

1.4.3 Storage

Materials shall be stored in designated areas. Seed, lime, and fertilizer shall be stored in cool, dry locations away from contaminants. Chemical treatment material shall be stored according to manufacturer's instructions and not with seeding operation materials.

1.4.4 Handling

Except for bulk deliveries, materials shall not be dropped or dumped from vehicles.

1.4.5 Time Limitation

Hydroseeding time limitation for holding seed in the slurry shall be a maximum 24 hours.

PART 2 PRODUCTS

2.1 SEED

2.1.1 Seed Classification

State-certified seed of the latest season's crop shall be provided in

original sealed packages bearing the producer's guaranteed analysis for percentages of mixture, purity, germination, hard seed, weed seed content, and inert material. Labels shall be in conformance with AMS Seed Act and applicable state seed laws.

2.1.2 Permanent Seed Species and Mixtures

Permanent seed species and mixtures shall be proportioned by weight as follows:

Botanical Name	Common Name	Mixture Percent by Weight	Percent Pure Live Seed
		LAWN SEED	
Festuca Ovina	Blue Sheep Fescue	85	85

2.1.4 Quality

Weed seed shall be a maximum 1 percent by weight of the total mixture.

2.1.5 Seed Mixing

The mixing of seed may be done by the seed supplier prior to delivery, or on site as directed.

2.1.6 Substitutions

Substitutions will not be allowed without written request and approval from the Contracting Officer.

2.2 TOPSOIL

Topsoil shall be as defined in ASTM D 5268. When available, the topsoil shall be the existing surface soil stripped and stockpiled onsite in accordance with Section 02300A EARTHWORK. When additional topsoil is required beyond the available topsoil from the stripping operation, topsoil shall be delivered and amended as recommended by the soil test for the seed specified. Topsoil shall be free from slag, cinders, stones, lumps of soil, sticks, roots, trash or other material over a minimum40 mm 1-1/2 inch diameter. Topsoil shall be free from viable plants and plant parts.

2.3 SOIL AMENDMENTS

Soil amendments shall consist of pH adjuster, fertilizer, organic material and soil conditioners meeting the following requirements. Vermiculite shall not be used.

2.3.1 pH Adjuster

The pH adjuster shall be an agricultural liming material in accordance with ASTM C 602. These materials may be burnt lime, hydrated lime, ground limestone, sulfur, or shells. The pH adjuster shall be used to create a favorable soil pH for the plant material specified.

2.3.1.1 Limestone

Limestone material shall contain a minimum calcium carbonate equivalent of 80 percent. Gradation: A minimum 95 percent shall pass through a2.36 mm No. 8 sieve and a minimum 55 percent shall pass through a0.250 mm No. 60 sieve. To raise soil pH, ground limestone shall be used.

2.3.1.2 Hydrated Lime

Hydrated lime shall contain a minimum calcium carbonate equivalent of 110 percent. Gradation: A minimum 100 percent shall pass through a2.36 mm No. 8 sieve and a minimum 97 percent shall pass through a0.250 mm No. 60 sieve.

2.3.1.3 Burnt Lime

Burnt lime shall contain a minimum calcium carbonate equivalent of 140 percent. Gradation: A minimum 95 percent shall pass through a2.36 mm No. 8 sieve and a minimum 35 percent shall pass through a0.250 mm No. 60 sieve.

2.3.2 Fertilizer

It shall be as recommended by the soil test. Fertilizer shall be controlled release commercial grade, free flowing, uniform in composition, and consist of a nitrogen-phosphorus-potassium ratio. The fertilizer shall be derived from sulphur coated urea, urea formaldehyde, plastic or polymer coated pills, or isobutylenediurea (IBDU). Fertilizer shall be balanced with the inclusion of trace minerals and micro-nutrients.

2.3.3 Nitrogen Carrier Fertilizer

It shall be as recommended by the soil test. Nitrogen carrier fertilizer shall be commercial grade, free flowing, and uniform in composition. The fertilizer may be a liquid nitrogen solution.

2.3.4 Organic Material

Organic material shall consist of either bonemeal, rotted manure, decomposed wood derivatives, recycled compost, or worm castings.

2.3.4.1 Bonemeal

Bonemeal shall be finely ground, steamed bone product containing from 2 to 4 percent nitrogen and 16 to 40 percent phosphoric acid.

2.3.4.2 Rotted Manure

Rotted manure shall be unleached horse, chicken or cattle manure containing a maximum 25 percent by volume of straw, sawdust, or other bedding materials. It shall contain no chemicals or ingredients harmful to plants. The manure shall be heat treated to kill weed seeds and be free of stones, sticks, and soil.

2.3.4.3 Decomposed Wood Derivatives

Decomposed wood derivatives shall be ground bark, sawdust, yard trimmings, or other wood waste material that is free of stones, sticks, soil, and toxic substances harmful to plants, and is fully composted or stabilized with nitrogen.

2.3.4.4 Recycled Compost

Compost shall be a well decomposed, stable, weed free organic matter source. Compost shall be derived from food; agricultural or industrial residuals; biosolids (treated sewage sludge); yard trimmings; or source-separated or mixed solid waste. The compost shall possess no objectionable odors and shall not resemble the raw material from which it was derived. The material shall not contain substances toxic to plants. Gradation: The compost material shall pass through a10 mm 3/8 inch screen, possess a pH of 5.5 to 8.0, and have a moisture content between 35-55 percent by weight. The material shall not contain more than 1 percent by weight of man-made foreign matter. Compost shall be cleaned of plastic materials larger than50 mm 2 inches in length.

2.3.4.5 Worm Castings

Worm castings shall be screened from worms and food source, and shall be commercially packaged.

2.3.5 Soil Conditioner

Soil conditioner shall be sand, super absorbent polymers, calcined clay, or gypsum for use singly or in combination to meet the requirements of the soil test.

2.3.5.1 Sand

Sand shall be clean and free of toxic materials. Gradation: A minimum 95 percent by weight shall pass a2 mm No. 10 sieve and a minimum 10 percent by weight shall pass a1.18 mm No. 16 sieve. Greensand shall be balanced with the inclusion of trace minerals and nutrients.

2.3.5.2 Super Absorbent Polymers

To improve water retention in soils, super absorbent polymers shall be sized and applied according to the manufacturer's recommendations. Polymers shall be added as a soil amendment and be cross-linked polyacrylamide, with an absorption capacity of 250-400 times its weight. Polymers shall also be added to the seed and be a starch grafted polyacrylonitrite, with graphite added as a tacky sticker. It shall have an absorption capacity of 100 plus times its weight.

2.3.5.3 Calcined Clay

Calcined clay shall be granular particles produced from montmorillonite clay calcined to a minimum temperature of650 degrees C. 1200 degrees F. Gradation: A minimum 90 percent shall pass a2.36 mm No. 8 sieve; a minimum 99 percent shall be retained on a0.250 mm No. 60 sieve; and a maximum 2 percent shall pass a0.150 mm No. 100 sieve. Bulk density: A maximum640 kilogram per cubic meter 40 pounds per cubic foot.

2.3.5.4 Gypsum

Gypsum shall be commercially packaged, free flowing, and a minimum 95 percent calcium sulfate by volume.

2.3.5.5 Expanded Shale, Clay, or Slate (ESCS)

Rotary kiln produced ESCS material shall be in conformance with ASTM D 5883.

2.4 MULCH

Mulch shall be free from weeds, mold, and other deleterious materials. Mulch materials shall be native to the region.

2.4.1 Straw

Straw shall be stalks from oats, wheat, rye, barley, or rice, furnished in air-dry condition and with a consistency for placing with commercial mulch-blowing equipment.

2.4.2 Hay

Hay shall be native hay, sudan-grass hay, broomsedge hay, or other herbaceous mowings, furnished in an air-dry condition suitable for placing with commercial mulch-blowing equipment.

2.6 WATER

Water shall be the responsibility of the Contractor, unless otherwise noted. Water shall not contain elements toxic to plant life.

2.7 PESTICIDE

Pesticide shall be insecticide, herbicide, fungicide, nematocide, rodenticide or miticide. For the purpose of this specification, a soil fumigant shall have the same requirements as a pesticide. The pesticide material shall be EPA registered and approved.

2.8 SURFACE EROSION CONTROL MATERIAL

Surface erosion control material shall conform to the following:

2.8.1 Surface Erosion Control Blanket

Blanket shall be machine produced mat of wood excelsior formed from a web of interlocking wood fibers; covered on one side with either knitted straw blanket-like mat construction; covered with biodegradable plastic mesh; or interwoven biodegradable thread, plastic netting, or twisted kraft paper cord netting.

2.8.2 Surface Erosion Control Fabric

Fabric shall be knitted construction of polypropylene yarn with uniform mesh openings19 to 25 mm 3/4 to 1 inch square with strips of biodegradable paper. Filler paper strips shall have a minimum life of 6 months.

2.8.3 Surface Erosion Control Net

Net shall be heavy, twisted jute mesh, weighing approximately605 grams per meter 1.22 pounds per linear yard and1200 mm 4 feet wide with mesh openings of approximately25 mm 1 inch square.

2.8.4 Surface Erosion Control Chemicals

Chemicals shall be high-polymer synthetic resin or cold-water emulsion of selected petroleum resins.

2.8.5 Hydrophilic Colloids

Hydrophilic colloids shall be physiologically harmless to plant and animal life without phytotoxic agents. Colloids shall be naturally occurring, silicate powder based, and shall form a water insoluble membrane after curing. Colloids shall resist mold growth.

2.8.6 Erosion Control Material Anchors

Erosion control anchors shall be as recommended by the manufacturer.

PART 3 EXECUTION

3.1 INSTALLING SEED TIME AND CONDITIONS

3.1.1 Seeding Time

Seed shall be installed from August 15 to October 15 for fall establishment.

3.1.2 Seeding Conditions

Seeding operations shall be performed only during periods when beneficial results can be obtained. When drought, excessive moisture, or other unsatisfactory conditions prevail, the work shall be stopped when directed. When special conditions warrant a variance to the seeding operations, proposed alternate times shall be submitted for approval.

3.1.3 Equipment Calibration

Immediately prior to the commencement of seeding operations, calibration tests shall be conducted on the equipment to be used. These tests shall confirm that the equipment is operating within the manufacturer's specifications and will meet the specified criteria. The equipment shall be calibrated a minimum of once every day during the operation. The calibration test results shall be provided within 1 week of testing.

3.1.4 Soil Test

Delivered topsoil, existing soil in smooth graded areas, and stockpiled topsoil shall be tested in accordance with ASTM D 5268 and ASTM D 4972 for determining the particle size, pH, organic matter content, textural class, chemical analysis, soluble salts analysis, and mechanical analysis. Sample collection on site shall be random over the entire site. Sample collection for stockpiled topsoil shall be at different levels in the stockpile. The soil shall be free from debris, noxious weeds, toxic substances, or other materials harmful to plant growth. The test shall determine the quantities and type of soil amendments required to meet local growing conditions for the seed species specified.

3.2 SITE PREPARATION

3.2.1 Finished Grade and Topsoil

The Contractor shall verify that finished grades are as indicated on

drawings, and the placing of topsoil, smooth grading, and compaction requirements have been completed in accordance with Section 02300A EARTHWORK, prior to the commencement of the seeding operation.

3.2.2 Application of Soil Amendments

3.2.2.1 Applying pH Adjuster

The pH adjuster shall be applied as recommended by the soil test. The pH adjuster shall be incorporated into the soil to a maximum100 mm 4 inch depth or may be incorporated as part of the tillage operation.

3.2.2.2 Applying Fertilizer

The fertilizer shall be applied as recommended by the soil test. Fertilizer shall be incorporated into the soil to a maximum100 mm 4 inch depth or may be incorporated as part of the tillage or hydroseeding operation.

3.2.2.3 Applying Soil Conditioner

The soil conditioner shall be as recommended by the soil test. The soil conditioner shall be spread uniformly over the soil a minimum25 mm 1 inch depth and thoroughly incorporated by tillage into the soil to a maximum 4 inch depth.

3.2.2.4 Applying Super Absorbent Polymers

Polymers shall be spread uniformly over the soil as recommended by the manufacturer and thoroughly incorporated by tillage into the soil to a maximum 100 mm 4 inch depth.

3.2.3 Tillage

Soil on slopes up to a maximum 3-horizontal-to-1-vertical shall be tilled to a minimum100 mm 4 inch depth. On slopes between 3-horizontal-to-1-vertical and 1-horizontal-to-1 vertical, the soil shall be tilled to a minimum 50 mm 2 inch depth by scarifying with heavy rakes, or other method. Rototillers shall be used where soil conditions and length of slope permit. On slopes 1-horizontal-to-1 vertical and steeper, no tillage is required. Drainage patterns shall be maintained as indicated on drawings. Areas compacted by construction operations shall be completely pulverized by tillage. Soil used for repair of surface erosion or grade deficiencies shall conform to topsoil requirements. The pH adjuster, fertilizer, and soil conditioner may be applied during this procedure.

3.2.4 Prepared Surface

3.2.4.1 Preparation

The prepared surface shall be a maximum25 mm 1 inch below the adjoining grade of any surfaced area. New surfaces shall be blended to existing areas. The prepared surface shall be completed with a light raking to remove debris.

3.2.4.2 Lawn Area Debris

Debris and stones over a minimum16 mm 5/8 inch in any dimension shall be removed from the surface.

3.2.4.3 Field Area Debris

Debris and stones over a minimum75 mm 3 inch in any dimension shall be removed from the surface.

3.2.4.4 Protection

Areas with the prepared surface shall be protected from compaction or damage by vehicular or pedestrian traffic and surface erosion.

3.3 INSTALLATION

Prior to installing seed, any previously prepared surface compacted or damaged shall be reworked to meet the requirements of paragraph SITE PREPARATION. Seeding operations shall not take place when the wind velocity will prevent uniform seed distribution.

3.3.1 Installing Seed

Seeding method shall be Broadcast Seeding Hydroseeding. Seeding procedure shall ensure even coverage. Gravity feed applicators, which drop seed directly from a hopper onto the prepared soil, shall not be used because of the difficulty in achieving even coverage, unless otherwise approved. Absorbent polymer powder shall be mixed with the dry seed at the rate recommended by the manufacturer.

3.3.1.1 Broadcast Seeding

Seed shall be uniformly broadcast at the rate of 160 kilograms per hectare pounds per 1000 square feet using broadcast seeders. Half the total rate of seed application shall be broadcast in 1 direction, with the remainder of the seed rate broadcast at 90 degrees from the first direction. Seed shall be covered a maximum 6 mm 1/4 inch depth by disk harrow, steel mat drag, cultipacker, or other approved device.

3.3.1.3 Rolling

The entire area shall be firmed with a roller not exceeding 130 kilograms per meter 90 pounds per foot roller width. Slopes over a maximum 3-horizontal-to-1 vertical shall not be rolled. Areas seeded with seed drills equipped with rollers shall not be rolled.

3.3.2 Hydroseeding

Seed shall be mixed to ensure broadcast at the rate of 160 kilograms per hectare pounds per 1000 square feet. Seed and fertilizer shall be added to water and thoroughly mixed to meet the rates specified. The time period for the seed to be held in the slurry shall be a maximum 24 hours. Wood cellulose fiber mulch and tackifier shall be added at the rates recommended by the manufacturer after the seed, fertilizer, and water have been thoroughly mixed to produce a homogeneous slurry. Slurry shall be uniformly applied under pressure over the entire area. The hydroseeded area shall not be rolled.

3.3.3 Mulching

3.3.3.1 Hay or Straw Mulch

Hay or straw mulch shall be spread uniformly at the rate of0.75 metric tons per hectare 2 tons per acre. Mulch shall be spread by hand, blower-type mulch spreader, or other approved method. Mulching shall be started on the windward side of relatively flat areas or on the upper part of steep slopes, and continued uniformly until the area is covered. The mulch shall not be bunched or clumped. Sunlight shall not be completely excluded from penetrating to the ground surface. All areas installed with seed shall be mulched on the same day as the seeding. Mulch shall be anchored immediately following spreading.

3.4 SURFACE EROSION CONTROL

3.4.1 Surface Erosion Control Material

Where indicated or as directed, surface erosion control material shall be installed in accordance with manufacturer's instructions. Placement of the material shall be accomplished without damage to installed material or without deviation to finished grade.

3.5 QUANTITY CHECK

For materials provided in bags, the empty bags shall be retained for recording the amount used. For materials provided in bulk, the weight certificates shall be retained as a record of the amount used. The amount of material used shall be compared with the total area covered to determine the rate of application used. Differences between the quantity applied and the quantity specified shall be adjusted as directed.

3.6 APPLICATION OF PESTICIDE

When application of a pesticide becomes necessary to remove a pest or disease, a pesticide treatment plan shall be submitted and coordinated with the installation pest management program.

3.6.1 Technical Representative

The certified installation pest management coordinator shall be the technical representative, and shall be present at all meetings concerning treatment measures for pest or disease control. They may be present during treatment application.

3.6.2 Application

A state certified applicator shall apply required pesticides in accordance with EPA label restrictions and recommendations. Clothing and personal protective equipment shall be used as specified on the pesticide label. A closed system is recommended as it prevents the pesticide from coming into contact with the applicator or other persons. Water for formulating shall only come from designated locations. Filling hoses shall be fitted with a backflow preventer meeting local plumbing codes or standards. Overflow shall be prevented during the filling operation. Prior to each day of use, the equipment used for applying pesticide shall be inspected for leaks, clogging, wear, or damage. Any repairs are to be performed immediately. A

pesticide plan shall be submitted.

3.7 RESTORATION AND CLEAN UP

3.7.1 Restoration

Existing turf areas, pavements, and facilities that have been damaged from the seeding operation shall be restored to original condition at Contractor's expense.

3.7.2 Clean Up

Excess and waste material shall be removed from the seeded areas and shall be disposed offsite. Adjacent paved areas shall be cleaned.

3.8 PROTECTION OF INSTALLED AREAS

Immediately upon completion of the seeding operation in an area, the area shall be protected against traffic or other use by erecting barricades and providing signage as required, or as directed.

3.9 SEED ESTABLISHMENT PERIOD

3.9.1 Commencement

The seed establishment period to obtain a healthy stand of grass plants shall begin on the first day of seeding work under this contract and shall continue through the remaining life of the contract and end 12 months after the last day of the seeding operation required by this contract. Written calendar time period shall be furnished for the seed establishment period. When there is more than 1 seed establishment period, the boundaries of the seeded area covered for each period shall be described.

3.9.2 Satisfactory Stand of Grass Plants

Grass plants shall be evaluated for species and health when the grass plants are a minimum25 mm 1 inch high.

3.9.2.1 Lawn Area

A satisfactory stand of grass plants from the seeding operation for a lawn area shall be a minimum 1000 grass plants per square meter 100 grass plants per square foot. Bare spots shall be a maximum[150] [230] mm 6 inches square. The total bare spots shall be a maximum 2 percent of the total seeded area.

3.9.2.2 Field Area

A satisfactory stand of grass plants from the seeding operation for a field area shall be a minimum 1000 grass plants per square meter 100 grass plants per square foot. The total bare spots shall not exceed 2 percent of the total seeded area.

3.9.3 Maintenance During Establishment Period

Maintenance of the seeded areas shall include eradicating weeds, insects and diseases; protecting embankments and ditches from surface erosion;

maintaining erosion control materials and mulch; protecting installed areas from traffic; mowing; watering; and post-fertilization.

3.9.3.1 Mowing

a. Lawn Areas: Lawn areas shall be mowed to a minimum 75 mm 3 inch height when the turf is a maximum100 mm 4 inches high. Clippings shall be removed when the amount cut prevents sunlight from reaching the ground surface.

b. Field Areas: Field areas shall be mowed once during the season to a minimum75 mm 3 inch height. Clippings shall be removed when the amount cut prevents sunlight from reaching the ground surface.

3.9.3.2 Post-Fertilization

The fertilizer shall be applied as recommended by the soil test. A maximum 4 kilograms per hectare 1/2 pound per 1000 square feet of actual available nitrogen shall be provided to the grass plants. The application shall be timed prior to the advent of winter dormancy and shall be made without burning the installed grass plants.

3.9.3.3 Pesticide Treatment

Treatment for disease or pest shall be in accordance with paragraph APPLICATION OF PESTICIDE.

3.9.3.4 Repair or Reinstall

Unsatisfactory stand of grass plants and mulch shall be repaired or reinstalled, and eroded areas shall be repaired in accordance with paragraph SITE PREPARATION.

3.9.3.5 Maintenance Record

A record of each site visit shall be furnished, describing the maintenance work performed; areas repaired or reinstalled; and diagnosis for unsatisfactory stand of grass plants.

-- End of Section --

SECTION 02930A

EXTERIOR PLANTING
01/02

PART 1 GENERAL

1.1 REFERENCES

The publications listed below form a part of this specification to the extent referenced. The publications are referred to in the text by basic designation only.

AMERICAN NATIONAL STANDARDS INSTITUTE (ANSI)

ANSI A300	(1995) Tree Care Operations - Trees, Shrubs and Other Woody Plant Maintenance

AMERICAN NURSERY AND LANDSCAPE ASSOCIATION (ANLA)

ANLA Z60.1	(1996) Nursery Stock

AMERICAN SOCIETY FOR TESTING AND MATERIALS (ASTM)

ASTM C 602	(1995a) Agricultural Liming Materials
ASTM D 4972	(2001) pH of Soils
ASTM D 5034	(1995) Breaking Strength and Elongation of Textile Fabrics (Grab Test)
ASTM D 5035	(1995) Breaking Force and Elongation of Textile Fabrics (Strip Method)
ASTM D 5268	(1992; R 1997) Topsoil Used for Landscaping Purposes
ASTM D 5883	(1996el) Use of Rotary Kiln Produced Expanded Shale, Clay or Slate (ESCS) as a Mineral Amendment in Topsoil Used for Landscaping and Related Purposes

1.2 SUBMITTALS

Government approval is required for submittals with a "G" designation; submittals not having a "G" designation are for information only. When used, a designation following the "G" designation identifies the office that will review the submittal for the Government. The following shall be submitted in accordance with Section 01330 SUBMITTAL PROCEDURES:

SD-03 Product Data

Chemical Treatment Material

Manufacturer's literature including physical characteristics,

application and installation instructions for geotextile and chemical treatment material.

Delivery

Delivery schedule.

Plant Establishment Period

Calendar time period for the plant establishment period. When there is more than one establishment period, the boundaries of the planted areas covered for each period shall be described.

SD-07 Certificates

Plant Material
Topsoil
pH Adjuster
Fertilizer
Organic Material
Soil Conditioner
Organic Mulch
Pesticide

Prior to delivery of materials, certificates of compliance attesting that materials meet the specified requirements. Certified copies of the material certificates shall include the following.

a. Plant Material: Classification, botanical name, common name, size, quantity by species, and location where grown.

b. Topsoil: Particle size, pH, organic matter content, textural class, soluble salts, chemical and mechanical analyses.

c. pH Adjuster: Sieve analysis and calcium carbonate equivalent.

d. Fertilizer: Chemical analysis and composition percent.

e. Organic Material: Composition and source.

f. Soil Conditioner: Composition and source.

g. Organic Mulch: Composition, source, and treatment against fungi growth.

h. Mycorrhizal Fungi Inoculum: Plant material treated.

i. Pesticide. EPA registration number and registered uses.

SD-10 Operation and Maintenance Data

Maintenance Instructions

Instruction for year-round care of installed plant material.

1.3 SOURCE INSPECTIONS

The nursery or source of plant material and the source of delivered topsoil shall be subject to inspection.

1.4 DELIVERY, INSPECTION, STORAGE, AND HANDLING

1.4.1 Delivery

A delivery schedule shall be provided at least 10 calendar days prior to the first day of delivery.

1.4.1.1 Plant Material Identification

Plant material shall be identified with attached, durable, waterproof labels and weather-resistant ink, stating the correct botanical plant name and size.

1.4.1.2 Protection During Delivery

Plant material shall be protected during delivery to prevent desiccation and damage to the branches, trunk, root system, or earth ball. Branches shall be protected by tying-in. Exposed branches shall be covered during transport.

1.4.1.3 Delivered Topsoil

Prior to the delivery of any topsoil, the availability of topsoil shall be verified in paragraph TOPSOIL. A soil test shall be provided for delivered topsoil.

1.4.1.4 Soil Amendments

Soil amendments shall be delivered to the site in the original, unopened containers bearing the manufacturer's chemical analysis. In lieu of containers, soil amendments may be furnished in bulk. A chemical analysis shall be provided for bulk deliveries.

1.4.1.5 Pesticide Material

Pesticide material shall be delivered to the site in the original, unopened containers bearing legible labels indicating the Environmental Protection Agency (EPA) registration number and the manufacturer's registered uses.

1.4.2 Inspection

Plant material shall be well shaped, vigorous and healthy with a healthy, well branched root system, free from disease, harmful insects and insect eggs, sun-scald injury, disfigurement or abrasion. Plant material shall be checked for unauthorized substitution and to establish nursery grown status. Plant material showing desiccation, abrasion, sun-scald injury, disfigurement, or unauthorized substitution shall be rejected. The plant material shall exhibit typical form of branch to height ratio; and meet the caliper and height measurements specified. Plant material that measures less than specified, or has been poled, topped off or headed back, shall be rejected. Container-grown plant material shall show new fibrous roots and the root mass shall contain its shape when removed from the container.

Plant material with broken or cracked balls; or broken containers shall be rejected. Bare-root plant material that is not dormant or is showing roots were pulled from the ground shall be rejected. Other materials shall be inspected for compliance with paragraph PRODUCTS. Open soil amendment containers or wet soil amendments shall be rejected. Topsoil that contains slag, cinders, stones, lumps of soil, sticks, roots, trash or other material larger than40 mm 1-1/2 inch diameter shall be rejected. Topsoil that contains viable plant material and plant parts shall be rejected. Unacceptable material shall be removed from the job site.

1.4.3 Storage

1.4.3.1 Plant Material Storage

Plant material not installed on the day of arrival at the site shall be stored and protected in designated areas. Plant material shall not be stored longer than 30 days. Plant material shall be protected from direct exposure to wind and sun. Bare-root plant material shall be heeled-in. All plant material shall be kept in a moist condition by watering with a fine mist spray until installed.

1.4.3.2 Other Material Storage

Storage of other material shall be in designated areas. Soil amendments shall be stored in dry locations and away from contaminants. Chemical treatment material shall be stored according to manufacturer's instructions and not with planting operation material.

1.4.4 Handling

Plant material shall not be injured in handling. Cracking or breaking the earth ball of balled and burlapped plant material shall be avoided. Plant material shall not be handled by the trunk or stems. Materials shall not be dropped from vehicles.

1.4.5 Time Limitation

Except for container-grown plant material, the time limitation from digging to installing plant material shall be a maximum 90 days. The time limitation between installing the plant material and placing the mulch shall be a maximum 24 hours.

1.5 WARRANTY

Furnished plant material shall have a warranty for plant growth to be in a vigorous growing condition for a minimum 12 month period. A minimum 12 month calendar time period for the warranty of plant growth shall be provided regardless of the contract time period. When plant material is determined to be unhealthy in accordance with paragraph PLANT ESTABLISHMENT PERIOD, it shall be replaced once under this warranty.

PART 2 PRODUCTS

2.1 PLANT MATERIAL

2.1.1 Plant Material Classification

The plant material shall be nursery grown stock conforming to ANLA Z60.1 and shall be the species specified.

2.1.2 Plant Schedule

The plant schedule shall provide botanical names as included in one or more of the publications listed under "Nomenclature" in ANLA Z60.1.

2.1.3 Substitutions

Substitutions will not be permitted without written request and approval from the Contracting Officer.

2.1.4 Quality

Well shaped, well grown, vigorous plant material having healthy and well branched root systems in accordance with ANLA Z60.1 shall be provided. Plant material shall be provided free from disease, harmful insects and insect eggs, sun-scald injury, disfigurement and abrasion. Plant material shall be free of shock or damage to branches, trunk, or root systems, which may occur from the digging and preparation for shipment, method of shipment, or shipment. Plant quality is determined by the growing conditions; method of shipment to maintain health of the root system; and growth of the trunk and crown as follows.

2.1.5 Growing Conditions

Plant material shall be native to or well-suited to the growing conditions of the project site. Plant material shall be grown under climatic conditions similar to those at the project site.

2.1.6 Method of Shipment to Maintain Health of Root System

2.1.6.1 Balled and Burlapped (BB) Plant Material

Ball size and ratio shall be in accordance with ANLA Z60.1. The ball shall be of a diameter and depth to encompass enough fibrous and feeding root system necessary for the full recovery of the plant. The plant stem or trunk shall be centered in the ball. All roots shall be clean cut at the ball surface. Roots shall not be pulled from the ground. Before shipment the root ball shall be dipped in gels containing mycorrhizal fungi inoculum. The root ball shall be completely wrapped with burlap or other suitable material and securely laced with biodegradable twine.

2.1.6.5 Container-Grown (C) Plant Material

Container size shall be in accordance with ANLA Z60.1. Plant material shall be grown in a container over a duration of time for new fibrous roots to have developed and for the root mass to retain its shape and hold together when removed from the container. Container-grown plant material shall be inoculated with mycorrhizal fungi during germination in the nursery. Before shipment the root system shall be dipped in gels containing mycorrhizal fungi inoculum. The container shall be sufficiently rigid to hold ball shape and protect root mass during shipping.

2.1.7 Growth of Trunk and Crown

2.1.7.1 Deciduous Trees

A height to caliper relationship shall be provided in accordance with ANLA Z60.1. Height of branching shall bear a relationship to the size and species of tree specified and with the crown in good balance with the trunk. The trees shall not be "poled" or the leader removed.

a. Single stem: The trunk shall be reasonably straight and symmetrical with crown and have a persistent main leader.

b. Multi-stem: All countable stems, in aggregate, shall average the size specified. To be considered a stem, there shall be no division of the trunk which branches more than150 mm 6 inches from ground level.

c. Specimen: The tree provided shall be well branched and pruned naturally according to the species. The form of growth desired, which may not be in accordance with natural growth habit, shall be as indicated.

2.1.7.3 Deciduous Shrubs

Deciduous shrubs shall have the height and number of primary stems recommended by ANLA Z60.1. Acceptable plant material shall be well shaped, with sufficient well-spaced side branches, and recognized by the trade as typical for the species grown in the region of the project.

2.1.7.4 Coniferous Evergreen Plant Material

Coniferous Evergreen plant material shall have the height-to-spread ratio recommended by ANLA Z60.1. The coniferous evergreen trees shall not be "poled" or the leader removed. Acceptable plant material shall be exceptionally heavy, well shaped and trimmed to form a symmetrical and tightly knit plant. The form of growth desired shall be as indicated.

2.1.7.5 Broadleaf Evergreen Plant Material

Broadleaf evergreen plant material shall have the height-to-spread ratio recommended by ANLA Z60.1. Acceptable plant material shall be well shaped and recognized by the trade as typical for the variety grown in the region of the project.

2.1.7.6 Ground Cover and Vine Plant Material

Ground cover and vine plant material shall have the minimum number of runners and length of runner recommended by ANLA Z60.1. Plant material shall have heavy, well developed and balanced crown with vigorous, well developed root system and shall be furnished in containers.

2.1.8 Plant Material Size

Plant material shall be furnished in sizes indicated. Plant material larger in size than specified may be provided at no additional cost to the Government.

2.1.9 Plant Material Measurement

Plant material measurements shall be in accordance with ANLA Z60.1.

2.2 TOPSOIL

Topsoil shall be as defined in ASTM D 5268. When available, the topsoil shall be the existing surface soil stripped and stockpiled onsite in accordance with Section 02300A EARTHWORK. When additional topsoil is required beyond the available topsoil from the stripping operation, topsoil shall be delivered and amended as recommended by the soil test for the plant material specified. Topsoil shall be free from slag, cinders, stones, lumps of soil, sticks, roots, trash or other material over a minimum 40 mm 1-1/2 inch diameter. Topsoil shall be free from viable plants and plant parts.

2.3 SOIL AMENDMENTS

Soil amendments shall consist of pH adjuster, fertilizer, organic material and soil conditioners meeting the following requirements. Vermiculite is not recommended.

2.3.1 pH Adjuster

The pH adjuster shall be an agricultural liming material in accordance with ASTM C 602. These materials may be burnt lime, hydrated lime, ground limestone, or shells. The pH adjuster shall be used to create a favorable soil pH for the plant material specified.

2.3.1.1 Limestone

Limestone material shall contain a minimum calcium carbonate equivalent of 80 percent. Gradation: A minimum 95 percent shall pass through a2.36 mm No. 8 sieve and a minimum 55 percent shall pass through a0.25 mm No. 60 sieve. To raise soil pH, ground limestone shall be used.

2.3.1.2 Hydrated Lime

Hydrated lime shall contain a minimum calcium carbonate equivalent of 110 percent. Gradation: A minimum 100 percent shall pass through a2.36 mm No. 8 sieve and a minimum 97 percent shall pass through a0.25 mm No. 60 sieve.

2.3.1.3 Burnt Lime

Burnt lime shall contain a minimum calcium carbonate equivalent of 140 percent. Gradation: A minimum 95 percent shall pass through a2.36 mm No. 8 sieve and a minimum 35 percent shall pass through a0.25 mm No. 60 sieve.

2.3.2 Fertilizer

It shall be as recommended by the soil test. Fertilizer shall be controlled release commercial grade; free flowing, pellet or tablet form; uniform in composition; and consist of a nitrogen-phosphorus-potassium ratio. The fertilizer shall be derived from sulphur coated urea, urea formaldehyde, plastic or polymer coated pills, or isobutylenediurea (IBDU). Fertilizer shall be balanced with the inclusion of trace minerals and micro-nutrients.

2.3.3 Organic Material

Organic material shall consist of either bonemeal, peat, rotted manure, decomposed wood derivatives, recycled compost, or worm castings.

2.3.3.1 Bonemeal

Bonemeal shall be a finely ground, steamed bone product containing from 2 to 4 percent nitrogen and 16 to 40 percent phosphoric acid.

2.3.3.2 Rotted Manure

Rotted manure shall be unleached horse, chicken, or cattle manure containing a maximum 25 percent by volume of straw, sawdust, or other bedding materials. Manure shall contain no chemicals or ingredients harmful to plants. The manure shall be heat treated to kill weed seeds and shall be free of stones, sticks, and soil.

2.3.3.3 Decomposed Wood Derivatives

Decomposed wood derivatives shall be ground bark, sawdust, or other wood waste material free of stones, sticks, and toxic substances harmful to plants, and stabilized with nitrogen.

2.3.3.4 Recycled Compost

Compost shall be a well decomposed, stable, weed free organic matter source. It shall be derived from food, agricultural, or industrial residuals; biosolids (treated sewage sludge); yard trimmings; or source-separated or mixed solid waste. The compost shall possess no objectionable odors and shall not resemble the raw material from which it was derived. The material shall not contain substances toxic to plants. Gradation: The compost material shall pass through a10 mm 3/8 inch screen, possess a pH of 5.5 to 8.0, and have a moisture content between 35-55 percent by weight. The material shall not contain more than 1 percent or less by weight of man-made foreign matter. Compost shall be cleaned of plastic materials larger than50 mm 2 inches in length. The Contractor shall comply with EPA requirements in accordance with Section 01670 RECYCLED / RECOVERED MATERIALS.

2.3.3.5 Worm Castings

Worm castings shall be screened from worms and food source and shall be commercially packaged.

2.3.4 Soil Conditioner

Soil conditioner shall be sand, super absorbent polymers, calcined clay, or gypsum for single use or in combination to meet topsoil requirements for the plant material specified.

2.3.4.1 Sand

Sand shall be clean and free of toxic materials. Gradation: A minimum 95 percent by weight shall pass a2 mm No. 10 sieve and a minimum 10 percent by weight shall pass a1.18 mm No. 16 sieve. Greensand shall be balanced with the inclusion of trace minerals and nutrients.

2.3.4.2 Super Absorbent Polymers

To improve water retention in soils, super absorbent polymers shall be sized according to manufacturer's recommendations. Polymers shall be added as a soil amendment and be cross-linked polyacrylamide with an absorption capacity of 250-400 times its weight.

2.3.4.3 Calcined Clay

Granular particles shall be produced from montmorillonite clay calcined to minimum temperature of650 degrees C. 1200 degrees F. Gradation: A minimum 90 percent passing2.36 mm No. 8 sieve; a minimum 99 percent shall be retained on0.25 mm No. 60 sieve; and a maximum 2 percent shall pass a0.15 mm No. 100 sieve. Bulk density: A maximum640 kilogram per cubic meter 40 pounds per cubic foot.

2.3.4.4 Gypsum

Gypsum shall be commercially packaged, free flowing, and a minimum 95 percent calcium sulfate by volume.

2.3.4.5 Expanded Shale, Clay, or Slate (ESCS)

Rotary kiln produced ESCS material shall be in conformance with ASTM D 5883.

2.4 MULCH

Mulch shall be free from weeds, mold, and other deleterious materials. Mulch materials shall be native to the region. Rotted manure is not recommended to be used as a mulch because it would encourage surface rooting of the plant material and weeds.

2.4.2 Organic Mulch

Organic mulch materials shall be native to the project site and consist of recycled mulch, shredded bark, wood chips, or ground bark.

2.4.2.2 Shredded Bark

Locally shredded material shall be treated to retard the growth of mold and fungi.

2.4.2.3 Wood Chips and Ground Bark

Locally chipped or ground material shall be treated to retard the growth of mold and fungi. Gradation: A maximum50 mm 2 inch wide by100 mm 4 inch long.

2.6 WOOD STAKING MATERIAL

Wood stakes shall be hardwood or fir; rough sawn; free from knots, rot, cross grain, or other defects that would impair their strength.

2.6.1 Bracing Stake

Wood bracing stakes shall be a minimum50 x 50 mm 2 x 2 inch square and a minimum2400 mm 8 feet long with a point at one end. Stake shall be set without damaging rootball.

2.6.2 Wood Ground Stakes

Wood ground stakes shall be a minimum of50 x 50 mm 2 x 2 inch square and a minimum900 mm 3 feet long with a point at one end.

2.7 METAL STAKING AND GUYING MATERIAL

Metal shall be aluminum or steel consisting of recycled content made for holding plant material in place.

2.7.1 Bracing Stakes

Metal bracing stakes shall be a minimum25 mm 1 inch diameter and a minimum 2400 mm 8 feet long. Stake shall be set without damaging rootball.

2.7.2 Metal Ground Stakes

Metal ground stakes shall be a minimum13 mm 1/2 inch diameter and a minimum 900 mm 3 feet long.

2.7.4 Guying Material

Metal guying material shall be a minimum 12 gauge wire. Multi-strand cable shall be woven wire. Guying material tensile strength shall conform to the size of tree to be held firmly in place.

2.7.5 Turnbuckle

Metal turnbuckles shall be galvanized or cadmium-plated steel, and shall be a minimum75 mm 3 inches long with closed screw eyes on each end. Screw thread tensile strength shall conform to the size of tree to be held firmly in place.

2.9 RUBBER GUYING MATERIAL

Rubber chafing guards, consisting of recycled material, shall be used to protect tree trunks and branches when metal guying material is applied. The material shall be the same color throughout the project. Length shall be a minimum 1.5 times the circumference of the plant trunk at its base.

2.10 FLAG

Plastic flag material shall be used on guying material. It shall be a minimum150 mm 6 inches long. Tape color shall be consistent and visually complimentary to the entire project area. The tape color shall meet pedestrian visual safety requirements for day and night.

2.13 WATER

Unless otherwise directed, water shall be the responsibility of the Contractor. Water shall not contain elements toxic to plant life.

2.14 PESTICIDE

Pesticide shall be insecticide, herbicide, fungicide, nematocide, rodenticide or miticide. For the purpose of this specification a soil fumigant shall have the same requirements as a pesticide. The pesticide

material shall be EPA registered and approved.

PART 3 EXECUTION

3.1 INSTALLING PLANT MATERIAL TIME AND CONDITIONS

3.1.1 Deciduous Plant Material Time

Deciduous plant material shall be installed from September to October.

3.1.2 Evergreen Plant Material Time

Evergreen plant material shall be installed from September to November.

3.1.3 Plant Material Conditions

Planting operations shall be performed only during periods when beneficial results can be obtained. When drought, excessive moisture, frozen ground or other unsatisfactory conditions prevail, the work shall be stopped when directed. When special conditions warrant a variance to the planting operations, proposed planting times shall be submitted for approval.

3.1.4 Tests

3.1.4.2 Soil Test

Delivered topsoil, excavated plant pit soil, and stockpiled topsoil shall be tested in accordance with ASTM D 5268 and ASTM D 4972 for determining the particle size, pH, organic matter content, textural class, chemical analysis, soluble salts analysis, and mechanical analysis. Sample collection onsite shall be random over the entire site. Sample collection for stockpiled topsoil shall be at different levels in the stockpile. The soil shall be free from debris, noxious weeds, toxic substances, or other materials harmful to plant growth. The test shall determine the quantities and type of soil amendments required to meet local growing conditions for the plant material specified.

3.2 SITE PREPARATION

3.2.1 Finished Grade, Topsoil and Underground Utilities

The Contractor shall verify that finished grades are as indicated on drawings, and that the placing of topsoil, the smooth grading, and the compaction requirements have been completed in accordance with Section 02300A EARTHWORK, prior to the commencement of the planting operation. The location of underground utilities and facilities in the area of the planting operation shall be verified. Damage to underground utilities and facilities shall be repaired at the Contractor's expense.

3.2.2 Layout

Plant material locations and bed outlines shall be staked on the project site before any excavation is made. Plant material locations may be adjusted to meet field conditions.

3.2.3 Protecting Existing Vegetation

When there are established lawns in the planting area, the turf shall be covered and/or protected during planting operations. Existing trees, shrubs, and plant beds that are to be preserved shall be barricaded along the dripline to protect them during planting operations.

3.3 EXCAVATION

3.3.1 Obstructions Below Ground

When obstructions below ground affect the work, shop drawings showing proposed adjustments to plant material location, type of plant and planting method shall be submitted for approval.

3.3.2 Turf Removal

Where the planting operation occurs in an existing lawn area, the turf shall be removed from the excavation area to a depth that will ensure the removal of the entire root system.

3.3.3 Plant Pits

Plant pits for ball and burlapped or container plant material shall be dug to a depth equal to the height of the root ball as measured from the base of the ball to the base of the plant trunk. Plant pits for bare-root plant material shall be dug to a depth equal to the height of the root system. Plant pits shall be dug a minimum 50 percent wider than the ball or root system to allow for root expansion. The pit shall be constructed with sides sloping towards the base as a cone, to encourage well aerated soil to be available to the root system for favorable root growth. Cylindrical pits with vertical sides shall not be used.

3.4 INSTALLATION

3.4.1 Setting Plant Material

Plant material shall be set plumb and held in position until sufficient soil has been firmly placed around root system or ball. In relation to the surrounding grade, the plant material shall be set even with the grade at which it was grown.

3.4.3 Backfill Soil Mixture

The backfill soil mixture may be a mix of topsoil and soil amendments suitable for the plant material specified. When practical, the excavated soil from the plant pit that is not amended provides the best backfill and shall be used.

3.4.5 Backfill Procedure

Prior to backfilling, all metal, wood, synthetic products, or treated burlap devices shall be removed from the ball or root system avoiding damage to the root system. The backfill procedure shall remove air pockets from around the root system. Additional requirements are as follows.

3.4.5.1 Balled and Burlapped, and Balled and Platformed Plant Material

Biodegradable burlap and tying material shall be carefully opened and

folded back from the top a minimum 1/3 depth from the top of the root ball. Backfill mixture shall be added to the plant pit in150 mm 6 inch layers with each layer tamped.

3.4.5.3 Container-Grown and Balled and Potted Plant Material

The plant material shall be carefully removed from containers that are not biodegradeable. Prior to setting the plant in the pit, a maximum 1/4 depth of the root mass, measured from the bottom, shall be spread apart to promote new root growth. For plant material in biodegradable containers the container shall be split prior to setting the plant with container. Backfill mixture shall be added to the plant pit in150 mm 6 inch layers with each layer tamped.

3.4.5.4 Earth Berm

An earth berm, consisting of backfill soil mixture, shall be formed with a minimum100 mm 4 inch height around the edge of the plant pit to aid in water retention and to provide soil for settling adjustments.

3.4.6 Plant Bed

Plant material shall be set in plant beds according to the drawings. Backfill soil mixture shall be placed on previously scarified subsoil to completely surround the root balls, and shall be brought to a smooth and even surface, blending to existing areas. Earth berms shall be provided. Polymers shall be spread uniformly over the plant bed and in the planting pit as recommended by the manufacturer and thoroughly incorporated into the soil to a maximum100 mm 4 inch depth.

3.4.7 Watering

Plant pits and plant beds shall be watered immediately after backfilling, until completely saturated.

3.4.8 Staking and Guying

Staking will be required when trees are unstable or will not remain set due to their size, shape, or exposure to high wind velocity.

3.4.8.1 One Bracing Stake

Trees1200 to 1800 mm 4 to 6 feet high shall be firmly anchored in place with one bracing stake. The bracing stake shall be placed on the side of the tree facing the prevailing wind. The bracing stake shall be driven vertically into firm ground and shall not injure the ball or root system. The tree shall be held firmly to the stake with a double strand of guying material. The guying material shall be firmly anchored at a minimum 1/2 tree height and shall prevent girdling. A chafing guard shall be used when metal is the guying material.

3.4.8.2 Two Bracing Stakes

Trees from1800 to 2400 m 6 to 8 feet height shall be firmly anchored in place with 2 bracing stakes placed on opposite sides. Bracing stakes shall be driven vertically into firm ground and shall not injure the ball or root

system. The tree shall be held firmly between the stakes with a double strand of guying material. The guying material shall be firmly anchored at a minimum 1/2 tree height and shall prevent girdling. Chafing guards shall be used when metal is the guying material.

3.4.8.3 Three Ground Stakes

Trees over a minimum2400 mm 8 feet height and less than a maximum150 mm 6 inch caliper shall be held firmly in place with 3 bracing or ground stakes spaced equidistantly around the tree. Ground stakes shall be avoided in areas to be mowed. Stakes shall be driven into firm ground outside the earth berm. The guying material shall be firmly anchored at a minimum 1/2 tree height and shall prevent girdling. For trees over maximum75 mm 3 inch diameter at breast height, turnbuckles shall be used on the guying material for tree straightening purposes. One turnbuckle shall be centered on each guy line. Chafing guards shall be used when metal is the guying material.

3.4.10 Flags

A flag shall be securely fastened to each guy line equidistant between the tree and the stake, deadmen, or earth anchor. The flag shall be visible to pedestrians.

3.5 FINISHING

3.5.1 Plant Material

Prior to placing mulch, the installed area shall be uniformly edged to provide a clear division line between the planted area and the adjacent turf area, shaped as indicated. The installed area shall be raked and smoothed while maintaining the earth berms.

3.5.3 Placing Mulch

The placement of mulch shall occur a maximum 48 hours after planting. Mulch, used to reduce soil water loss, regulate soil temperature and prevent weed growth, shall be spread to cover the installed area with a minimum100 mm 4 inch uniform thickness. Mulch shall be kept out of the crowns of shrubs, ground cover, and vines and shall be kept off buildings, sidewalks and other facilities.

3.5.4 Pruning

Pruning shall be accomplished by trained and experienced personnel. The pruning of trees and palms shall be in accordance with ANSI A300. Only dead or broken material shall be pruned from installed plants. The typical growth habit of individual plant material shall be retained. Clean cuts shall be made flush with the parent trunk. Improper cuts, stubs, dead and broken branches shall be removed. "Headback" cuts at right angles to the line of growth will not be permitted. Trees shall not be poled or the leader removed, nor shall the leader be pruned or "topped off".

3.6 MAINTENANCE DURING PLANTING OPERATION

Installed plant material shall be maintained in a healthy growing condition. Maintenance operations shall begin immediately after each plant is installed to prevent desiccation and shall continue until the plant

establishment period commences. Installed areas shall be kept free of weeds, grass, and other undesired vegetation. The maintenance includes maintaining the mulch, watering, and adjusting settling.

3.7 APPLICATION OF PESTICIDE

When application of a pesticide becomes necessary to remove a pest or disease, a pesticide treatment plan shall be submitted and coordinated with the installation pest management program.

3.7.1 Technical Representative

The certified installation pest management coordinator shall be the technical representative, and shall be present at all meetings concerning treatment measures for pest or disease control. They may be present during treatment application.

3.7.2 Application

A state certified applicator shall apply required pesticides in accordance with EPA label restrictions and recommendations. Clothing and personal protective equipment shall be used as specified on the pesticide label. A closed system is recommended as it prevents the pesticide from coming into contact with the applicator or other persons. Water for formulating shall only come from designated locations. Filling hoses shall be fitted with a backflow preventer meeting local plumbing codes or standards. Overflow shall be prevented during the filling operation. Prior to each day of use, the equipment used for applying pesticide shall be inspected for leaks, clogging, wear, or damage. Any repairs are to be performed immediately.

3.8 RESTORATION AND CLEAN UP

3.8.1 Restoration

Turf areas, pavements and facilities that have been damaged from the planting operation shall be restored to original condition at the Contractor's expense.

3.8.2 Clean Up

Excess and waste material shall be removed from the installed area and shall be disposed offsite. Adjacent paved areas shall be cleared.

3.9 PLANT ESTABLISHMENT PERIOD

3.9.1 Commencement

The plant establishment period for maintaining exterior plantings in a healthy growing condition shall commence on the first day of exterior planting work under this contract and shall continue through the remaining life of the contract and end 12 months after the last day of exterior planting required by this contract. Written calendar time period shall be furnished for the plant establishment period. When there is more than one plant establishment period, the boundaries of the planted area covered for each period shall be described. The plant establishment period shall be coordinated with Sections 02921A SEEDING. The plant establishment period shall be modified for inclement weather shut down periods, or for separate

completion dates for areas.

3.9.2 Maintenance During Establishment Period

Maintenance of plant material shall include straightening plant material, straightening stakes; tightening guying material; correcting girdling; supplementing mulch; pruning dead or broken branch tips; maintaining plant material labels; watering; eradicating weeds, insects and disease; post-fertilization; and removing and replacing unhealthy plants.

3.9.2.1 Watering Plant Material

The plant material shall be watered as necessary to prevent desiccation and to maintain an adequate supply of moisture within the root zone. An adequate supply of moisture is estimated to be the equivalent of25 mm 1 inch absorbed water per week, delivered in the form of rain or augmented by watering. Run-off, puddling and wilting shall be prevented. Unless otherwise directed, watering trucks shall not be driven over turf areas. Watering of other adjacent areas or existing plant material shall be prevented.

3.9.2.2 Weeding

Grass and weeds in the installed areas shall not be allowed to reach a maximum75 mm 3 inches height before being completely removed, including the root system.

3.9.2.3 Pesticide Treatment

Treatment for disease or pest shall be in accordance with paragraph APPLICATION OF PESTICIDE.

3.9.2.4 Post-Fertilization

The plant material shall be topdressed at least once during the period of establishment with controlled release fertilizer, reference paragraph SOIL AMENDMENTS. Apply at the rate of1 kilogram per 10 square meters 2 pounds per 100 square feet of plant pit or bed area. Dry fertilizer adhering to plants shall be flushed off. The application shall be timed prior to the advent of winter dormancy.

3.9.2.5 Plant Pit Settling

When settling occurs to the backfill soil mixture, additional backfill soil shall be added to the plant pit or plant bed until the backfill level is equal to the surrounding grade. Serious settling that affects the setting of the plant in relation to the maximum depth at which it was grown requires replanting in accordance with paragraph INSTALLATION. The earth berm shall be maintained.

3.9.2.6 Maintenance Record

A record shall be furnished describing the maintenance work performed, the quantity of plant losses, diagnosis of the plant loss, and the quantity of replacements made on each site visit.

3.9.3 Unhealthy Plant Material

A tree shall be considered unhealthy or dead when the main leader has died back, or up to a maximum 25 percent of the crown has died. A shrub shall be considered unhealthy or dead when up to a maximum 25 percent of the plant has died. This condition shall be determined by scraping on a branch an area2 mm 1/16 inch square, maximum, to determine if there is a green cambium layer below the bark. The Contractor shall determine the cause for unhealthy plant material and shall provide recommendations for replacement. Unhealthy or dead plant material shall be removed immediately and shall be replaced as soon as seasonal conditions permit.

3.9.4 Replacement Plant Material

Unless otherwise directed, plant material shall be provided for replacement in accordance with paragraph PLANT MATERIAL. Replacement plant material shall be installed in accordance with paragraph INSTALLATION, and recommendations in paragraph PLANT ESTABLISHMENT PERIOD. Plant material shall be replaced in accordance with paragraph WARRANTY. An extended plant establishment period shall not be required for replacement plant material.

3.9.5 Maintenance Instructions

Written instructions shall be furnished containing drawings and other necessary information for year-round care of the installed plant material; including, when and where maintenance should occur, and the procedures for plant material replacement,.

-- End of Section --

SECTION 11312N

PACKAGE GRINDER PUMP LIFT STATION
01/01

PART 1 GENERAL

1.1 REFERENCES

The publications listed below form a part of this specification to the extent referenced. The publications are referred to in the text by the basic designation only.

AMERICAN ASSOCIATION OF STATE HIGHWAY AND TRANSPORTATION OFFICIALS (AASHTO)

AASHTO M 198	(1998) Joints for Circular Concrete Sewer and Culvert Pipe Using Flexible Watertight Gaskets

ASME INTERNATIONAL (ASME)

ASME B1.20.1	(1983; R 2001) Pipe Threads, General Purpose (Inch)
ASME B16.1	(1998) Cast Iron Pipe Flanges and Flanged Fittings

AMERICAN NATIONAL STANDARDS INSTITUTE (ANSI)

ANSI B16.3	(1998) Malleable Iron Threaded Fittings Classes 150 and 300
ANSI B16.11	(1996) Forged Steel Fittings, Socket Welded and Threaded
ANSI B31.3	(1999) Process Piping
AWWA C151	(2002) Ductile-Iron Pipe, Centrifugally Cast, for Water

AMERICAN SOCIETY FOR TESTING AND MATERIALS (ASTM)

ASTM A 53/A 53M	(1999; Rev. B) Pipe, Steel, Black and Hot-Dipped, Zinc-Coated Welded and Seamless
ASTM A 123/A 123M	(2002) Zinc (Hot-Dip Galvanized) Coatings on Iron and Steel Products
ASTM A 126	(1995) Standard Specification for Gray Iron Castings for Valves, Flanges, and Pipe Fittings
ASTM A 536	(1984; R 1999el) Ductile Iron Castings
ASTM A 615/A 615M	(2000) Deformed and Plain Billet-Steel

	Bars for Concrete Reinforcement
ASTM C 443/C 443M	(1998) Joints for Circular Concrete Sewer and Culvert Pipe, Using Rubber Gaskets
ASTM C 478/C 478M	(1999; Rev. A) Precast Reinforced Concrete Manhole Sections
ASTM D 1784	(1999ael) Rigid Poly(Vinyl Chloride) (PVC) Compounds and Chlorinated Poly(Vinyl Chloride) (CPVC) Compounds
ASTM D 1785	(1999) Poly(Vinyl Chloride) (PVC) Plastic Pipe, Schedules 40, 80, and 120
ASTM D 2241	(2000) Poly(Vinyl Chloride) (PVC) P ressure-Rated Pipe (SDR Series)
ASTM D 2464	(1999) Threaded Poly(Vinyl Chloride) (PVC) Plastic Pipe Fittings, Schedule 80
ASTM D 2466	(2002) Poly(Vinyl Chloride) (PVC) Plastic Pipe Fittings, Schedule 40
ASTM D 2467	(2002) Poly(Vinyl Chloride) (PVC) Plastic Pipe Fittings, Schedule 80
ASTM D 3139	(1998) Joints for Plastic Pressure Pipes Using Flexible Elastomeric Seals
ASTM F 477	(2002el) Elastomeric Seals (Gaskets) for Joining Plastic Pipe

AMERICAN WATER WORKS ASSOCIATION (AWWA)

AWWA C104	(1995) Cement-Mortar Lining for Ductile-Iron Pipe and Fittings for Water
AWWA C110	(1998) Ductile-Iron and Gray-Iron Fittings, 3 In. Through 48 In. (76 mm t hrough 1219 mm), for Water
AWWA C111	(2000) Rubber-Gasket Joints for Ductile-Iron Pressure Pipe and Fittings
AWWA C115	(1999) Flanged Ductile-Iron Pipe with Ductile-Iron or Gray-Iron Threaded Flanges
AWWA C151	(2002) Ductile-Iron Pipe, Centrifugally Cast, for Water
AWWA C500	(1993; C500a) Metal-Seated Gate Valves for Water Supply Service
AWWA C509	(1994; Addendum 1995) Resilient-Seated Gate Valves for Water Supply Service

AWWA C600	(1999) Installation of Ductile-Iron Water Mains and Their Appurtenances
AWWA M23	(2002) Manual: PVC Pipe - Design and Installation

NATIONAL ELECTRICAL MANUFACTURERS ASSOCIATION (NEMA)

NEMA MG 1	(1998) Motors and Generators

1.2 DESCRIPTION OF WORK

The work includes providing submersible sewage grinder pump station and related work. Provide system complete and ready for operations. Grinder pump station system including equipment, materials, installation, and workmanship shall be as specified herein.

1.3 SUBMITTALS

Submit the following in accordance with Section 01330, "Submittal Procedures."

SD-10 Operation and Maintenance Data

Submersible Sewage Grinder Pumps Data Package 3; G

Include pumps, alarms, and motors. Include all information on all equipment, alarm panel and controls, pumps and pump performance curves, and station layout in data for submersible sewage grinder pump station.

1.4 DELIVERY, STORAGE, AND HANDLING OF MATERIALS

1.4.1 Delivery and Storage

Inspect materials delivered to site for damage. Unload and store with minimum handling. Store materials in enclosures or under protective covering. Store rubber gaskets not to be installed immediately under cover, out of direct sunlight. Do not store materials directly on the ground. Keep interior of pipes and fittings free of dirt and debris.

1.4.2 Handling

Handle pipe, fittings, valves, and other accessories in such manner as to ensure delivery to the trench in sound, undamaged condition. Avoid injury to coatings and linings on pipe and fittings; make satisfactory repairs if coatings or linings are damaged. Carry pipe to the trench; do not drag it.

1.5 EXCAVATION, TRENCHING, AND BACKFILLING

Provide in accordance with Section 02316A "Excavation, Trenching, and Backfilling for Utilities Systems," except as specified herein.

PART 2 PRODUCTS

2.1 PIPE AND FITTINGS

Provide pressure piping, air release valves, and related accessories for force main piping outside the sewage wet well and valve vault in accordance with Section 02531 "Sanitary Sewerage".

2.1.1 Ductile-Iron Pipe

AWWA C151, thickness Class 52.

2.1.1.1 Flanged Pipe

AWWA C115, ductile iron.

2.1.1.2 Fittings

AWWA C110, flanged. Provide flanged joint fittings within wet well and valve vault as indicated. Provide mechanical joint fittings outside valve vault enclosure as indicated. Use fittings with pressure rating at least equivalent to that of the pipe.

2.1.1.3 Joints

AWWA C115 for flanged joints. Use bolts, nuts, and gaskets for flanged connections recommended in the Appendix to AWWA C115. Flange for setscrewed flanges shall be of ductile iron, ASTM A 536, Grade 65-45-12, conforming to the applicable requirements of ASME B16.1, Class 250. Setscrews for setscrewed flanges shall be 1310 MPa 190,000 psi tensile strength, heat treated, and zinc-coated steel. Gasket for setscrewed flanges shall conform to the applicable requirements for mechanical-joint gaskets specified in AWWA C111. Use setscrewed gasket designed to provide for confinement and compression of gasket when joint to adjoining flange is made.

2.1.2 PVC Plastic Pressure Pipe and Associated Fittings

2.1.2.1 Pipe and Fittings Less Than 4 inch 100 mm Diameter

Use pipe, couplings and fittings manufactured of materials conforming to ASTM D 1784, Class 12454-B.

(1) Screw-Joint: Use pipe conforming to dimensional requirements of ASTM D 1785 Schedule 80, with joints meeting requirements of 1.03 MPa 150 psi working pressure, 1.38 MPa 200 psi hydrostatic test pressure, unless otherwise shown or specified. Use threaded pipe fittings conforming to requirements of ASTM D 2464, threaded to conform to the requirements of ASME B1.20.1 for use with Schedule 80 pipe and fittings. Test pipe couplings when used, as required by ASTM D 2464.

(2) Push-On Joint: ASTM D 3139, with ASTM F 477 gaskets. Fittings for push-on joints: AWWA C110 or AWWA C111. Iron fittings and specials: cement-mortar lined (standard thickness) in accordance with AWWA C104.

(3) Solvent Cement Joint: Use pipe conforming to dimensional requirements of ASTM D 1785 or ASTM D 2241 with joints meeting the requirements of 1.03 MPa 150 psi working pressure and 1.38 MPa 200 psi hydrostatic test pressure. USe fittings for solvent

cement jointing conforming to ASTM D 2466 or ASTM D 2467.

2.1.3 Insulating Joints

Provide between pipes of dissimilar metals a rubber gasket or other approved type of insulating joint or dielectric coupling to effectively prevent metal-to-metal contact between adjacent sections of piping.

2.1.4 Accessories

Provide flanges, connecting pieces, transition glands, transition sleeves, and other adapters as required.

2.1.5 Flexible Flanged Coupling

Provide flexible flanged coupling applicable for sewage as indicated. Use flexible flanged coupling designed for a working pressure of 2.41 MPa 350 psi.

2.2 VALVES AND OTHER PIPING ACCESSORIES

2.2.1 Gate Valves in Valve Vault

AWWA C500 and AWWA C509. Valves conforming to AWWA C500 shall be outside-screw-and-yoke rising-stem type with double disc gates and flanged ends. Valves conforming to AWWA C509 shall be outside-screw-and-yoke rising-stem type with flanged ends. Provide valves with handwheels that open by counterclockwise rotation of the valve stem. Bolt and construct stuffing boxes to permit easy removal of parts for repair. Use valves from one manufacturer.

2.2.2 Check Valves Less Than 100 mm 4 Inch Diameter

Neoprene ball check valve with integral hydraulic sealing flange, designed for a hydraulic working pressure of 1.21 MPa 175 psi.

2.2.3 Check Valves100 mm 4 in and Larger Diameter

Nonclogging swing check valve rated for not less than 175 psig working pressure capable of passing 76-mm 3-inch diameter solids. Cast iron conforming to ASTM A 126. Buna-N disc and integral seat. Flanged ends conforming to AWWA C110.

2.2.3 Identification Tags and Plates

Provide valves with tags or plates numbered and stamped for their usage. Use plates and tags of brass or nonferrous material and mounted or attached to the valve.

2.2.4 Pipe Support

Use pipe support schedule 40 galvanized steel piping conforming to ASTM A 53/A 53M. Provide either ANSI B16.3 or ANSI B16.11 galvanized threaded fittings.

2.2.5 Miscellaneous Metals

Use stainless steel bolts, nuts, washers, anchors, and supports for installation of equipment.

2.2.6 Quick Disconnect System with Hydraulic Sealing Flange

Use quick disconnect system consisting of a steel base plate for supporting the pumps, a hydraulic sealing flange, pump guide rails and the discharge pipe supports. Use two guide rails of galvanized steel in accordance with ASTM A 123/A 123M. Provide a steel lifting chain for raising and lowering the pump in the basin. Build guides onto pump housing to fit the guide post to assure perfect alignment between pump and guide rails.

2.2.7 Wet Well Vent

Galvanized ASTM A 53/A 53M pipe with insect screening.

2.3 SUBMERSIBLE SEWAGE GRINDER PUMPS

Provide submersible sewage pumps with grinder units as shown on the drawings. Provide submersible, centrifugal sewage pumps and grinder units capable of grinding all materials found in normal domestic sewage, including plastics, rubber, sanitary napkins, disposable diapers, and wooden articles into a finely ground slurry with particle dimensions no greater than [6][____] mm 1/4 inch. Design pump to operate in a submerged or partially submerged condition. Provide an integral sliding guide bracket and two guide bars capable of supporting the entire weight of the pumping unit.

2.3.1 Casing

Provide hard, close-grained cast iron casing which is free from blow holes, porosity, hard spots, shrinkage defects, cracks, and other injurious defects. Design casings to permit replacement of wearing parts. Design passageways to permit smooth flow of sewage and to be free of sharp turns and projections.

2.3.2 Impeller

Provide non-clogging type cast-iron, or bronze impeller. Make impeller with smooth surfaces, free flowing with the necessary clearance to permit objects in the sewage to pass. Fit and key, spline, or thread impeller on shaft, and lock in such manner that lateral movement will be prevented and reverse rotation will not cause loosening.

2.3.3 Shaft and Shaft Seals

Provide shaft of stainless steel. Provide mechanical seal of double carbon and ceramic construction with mating surfaces lapped to a flatness tolerance of one light band. Hold rotating ceramics in mating position with stationary carbons by a stainless steel spring. Oil lubricate bearings.

2.3.4 Bearings

Provide heavy duty ball thrust bearing or roller type bearing of adequate size to withstand imposed loads. Oil lubricate bearings.

2.3.5 Pump and Motor

Use pump and motor assembled on a single stainless steel shaft in a heavy duty cast-iron shell. Use free standing pump support legs of cast-iron providing enough clearance for the solids to get into the grinder.

2.4 PUMP MOTOR

Provide submersible sewage pumps in wet well as provided for on plan drawings and detail drawings. Motor horsepower shall be not less than pump horsepower at any point on the pump performance curve. Fit motors with lifting "eyes" capable of supporting entire weight of pump and motor.

2.5 PUMP CONTROL SYSTEM

Provide a sealed mercury float switch control system as indicated. Automatically alternate operation from one pump to the other and start second pump in the event first pump cannot handle incoming flow. Provide manual "on-off" switch for each pump. Provide independent adjustable high and low water level switches. Provide floats, supports, and alarm. Metal parts, if used, shall be of bronze or equivalent corrosion resistant material.

2.5.1 Float Assembly Description

Use a direct acting float switch consisting of a normally-open mercury switch enclosed in a float. Use pipe mounted float assembly. Use float molded of rigid high-density polyurethane foam, color-coded and coated with a durable, water and corrosion-resistant jacket of clear urethane. Provide connecting cable and support pole in accordance with manufacturers recommendations. Provide a cast aluminum NEMA Type 4 junction box to connect float assembly. Use box with a gasketed cover with tapped float fitting and conduit entrance pipe threaded opening. Mount floats at fixed elevations as shown. Use floats designed to tilt and operate their switches causing sequential turn-on turn-off of the pump, when the liquid level being sensed rises or falls past the float.

2.5.2 Alternator

Provide an alternator control switch to operate in connection with each float. Use alternator control switch to alternate the operation of the pumps and operate both pumps if the water level rises above the second high water level. Incorporate time delay function and devices in the alternator controls such that both sewage pumps cannot be started simultaneously for an adjustable period of 10 to 120 seconds after shutdown. Use delay function designed to operate in any condition of start-up in either normal or emergency operational mode.

2.5.3 Sewage Pump Alarm and Control Panel

Enclose alarm panel in NEMA IV enclosure and with a flashing red light with long life bulb in guarded enclosure and 15 mm 6 inch diameter horn. Horn shall emit 120 DB at 3 meters 10 feet. Power alarm horn and light from 12V DC power supply with battery backup. Provide a rechargeable battery rated to power both the horn and light for a minimum of two hours upon loss of main power. Provide circuitry to automatically recharge the battery after main power is restored. Full charge of battery shall take no more than 20

hours. Use panel swith power on light, push to test button for horn and light and push to silence button for horn and light with automatic reset for next alarm. Use alarm designed to activate under the following conditions:

a. High liquid level as sensed by float switch

b. Loss of main power

c. No flow light as sensed by limit switch on the check valve

2.5.4 Electrical Requirements

Furnish motors with their respective pieces of equipment. Motors, controllers, contactors, and disconnects shall be as specified in Section 16 375A "Electrical Distribution System, Underground." Furnish internal wiring for components of packaged equipment as an integral part of the equipment. Provide power wiring and conduit for field installed equipment.

2.5.5 Electric Motor

Use hermetically sealed electric motor. The power cable shall be sealed inside the motor end bell. The cable shall be neoprene covered with a flexible metal cover over it for its full length.

2.6 UNDERGROUND EQUIPMENT ENCLOSURE

2.6.1 Access Hatch Cover

Provide access hatch cover as indicated. The access hatch shall include lifting mechanism, automatic hold open arm, slam lock with handle, and flush lift handle with red vinyl grip. Use automatic hold open arm that locks in the 90 degree position. Use cover that is 6 mm 1/4 inch diamond plate with 6 mm 1/4 inch channel frame and continuous anchor flange. USe access hatch cover capable of withstanding a live load of 1500 kg/sq. meter 300 lbs./sq. ft. Provide stainless steel cylinder lock with two keys per lock. Key all the locks the same.

2.6.2 Wet Well and Valve Vault

Provide concrete wet well and Valve Vault with inside diameter as indicated. Precast structures may be provided in lieu of cast-in-place structures.

2.6.2.1 Cast-In-Place Concrete Structures

Provide wet well and valve vault with a compressive strength of 25 MPa 3000 psi at 28 days.

2.6.2.2 Precast Concrete Structures

ASTM C 478/C 478M, except as specified herein. Provide precast concrete structures with a compressive strength of 30 MPa 4000 psi at 28 days and an air entrainment of 6 percent, plus, or minus 2 percent and a minimum wall thickness of 125 mm 5 inches. ASTM A 615/A 615M reinforcing bars. ASTM C 443/C 443M or AASHTO M 198, Type B gaskets for joint connections. Use monolithic base and first riser.

2.6.3 Wet Well Base Material

Provide crushed stone as indicated and specified in Section 02316A "Excavation, Trenching, and Backfilling for Utilities Systems."

PART 3 EXECUTION

3.1 INSTALLATION

Provide pump station in accordance with drawings and requirements of the respective equipment manufacturers. Dampen and isolate equipment vibration.

3.1.1 Installation of Ductile-Iron Pressure Lines

Unless otherwise specified, install pipe and fittings in accordance with paragraph entitled, "General Requirements for Installation of Pipelines" of Section 02531 "Sanitary Sewerage," and with the requirements of AWWA C600 for pipe installation, joint assembly, and valve-and-fitting installation.

a. Make flanged joint with gaskets, bolts, and nuts specified for this type joint. Make flanged joints up tight, taking care to avoid undue strain on flanges, fittings, and other accessories. Align bolt holes for each flanged joint. Use size bolts for the bolt holes; use of undersized bolts to make up for misalignment of bolt holes or for any other purpose will not not be permitted. Do not allow adjoining flange faces to be out of parallel to such degree that the flanged joint cannot be made watertight without overstraining the flange.

3.1.2 Installation of PVC Plastic Pressure Pipe and Fittings

Unless otherwise specified, install pipe and fittings in accordance with paragraph entitled "General Requirements for Installation of Pipelines" of this section and with the recommendations for pipe joint assembly and appurtenance installation in AWWA M23, Chapter 7, "Installation."

a. Pipe Less than 100 mm 4 Inch Diameter:

(1) Make threaded joints by wrapping the male threads with joint tape or by applying an approved thread lubricant, than threading the joining members together. Tighten joints with strap wrenches that will not damage the pipe and fittings. Do not tighten joint more than 2 threads past hand-tight.

(2) Push-On Joints: Bevel ends of pipe for push-on joints to facilitate assembly. Mark pipe to indicate when the pipe is fully seated. Lubricate gasket to prevent displacement. Exercise care to ensure that the gasket remains in proper position in the bell or coupling while making the joint.

(3) Solvent-weld joints shall comply with the manufacturer's instructions.

3.1.3 Valves

Installation of Valves: Install gate valves conforming to AWWA C500 in accordance with AWWA C600 for valve-and-fitting installation and with the

recommendations of the Appendix ("Installation, Operation, and Maintenance of Gate Valves") to AWWA C500. Install gate valves conforming to AWWA C509 in accordance with AWWA C600 for valve-and-fitting installation and with the recommendations of the Appendix ("Installation, Operation, and Maintenance of Gate Valves") to AWWA C509. Install check valves in accordance with the applicable requirements of AWWA C600 for valve-and-fitting installation , except as otherwise indicated. Make and assemble joints to gate valves and check valves as specified for making and assembling the same type joints between pipe and fittings.

3.1.4 Steel Piping

Install steel piping in accordance with ANSI B31.3. Use PTFE pipe thread paste or PTFE powder and oil for jointing compound for pipe threads.

3.1.5 Force Main

Provide in accordance with Section 02531 "Sanitary Sewerage."

3.1.6 Equipment Installation

Install equipment in accordance with these specifications and the manufacturer's installation instructions. Grout equipment mounted on concrete foundations before installing piping. Install piping to avoid imposing stress on any equipment. Match flanges accurately before securing bolts.

3.2 FIELD TESTS AND INSPECTIONS

Perform all field tests, and provide all labor, equipment, and incidentals required for testing, except that water and electric power needed for field tests will be furnished as set forth in Division 01. Produce evidence, when required, that any item of work has been constructed in accordance with contract requirements. Allow concrete to cure a minimum of 5 days before testing any section of piping where concrete thrust blocks have been provided.

3.2.1 Testing Procedure

Test piping in accordance with the Section 02531 "Sanitary Sewerage". Test in operation all equipment to demonstrate compliance with the contract requirements.

3.2.2 Sewage Grinder Pump Lift Station

Test pumps and controls, in operation, under design conditions to insure proper operation of all equipment. Provide all appliances, materials, water, and equipment for testing, and bear all expenses in connection with the testing. Conduct testing after all equipment is properly installed, electrical services and piping are installed, liquid is flowing, and the pump station is ready for operation. Correct all defects discovered to the satisfaction of the Contracting Officer, and all tests repeated, at the expense of the Contractor, until the equipment is in proper working order.

-- End of Section --

SECTION 13216

UNDERGROUND PETROLEUM TANKS
08/04

PART 1 GENERAL

1.1 REFERENCES

The publications listed below form a part of this specification to the extent referenced. The publications are referred to within the text by the basic designation only.

ASME INTERNATIONAL (ASME)

ASME BPVC SEC VIII D1	(2001) Boiler and Pressure Vessel Code; Section VIII, Pressure Vessels Division 1 - Basic Coverage

ASTM INTERNATIONAL (ASTM)

ASTM D 1751	(1999) Preformed Expansion Joint Filler for Concrete Paving and Structural Construction (Nonextruding and Resilient Bituminous Types)
ASTM D 1752	(1984; R 1996e1) Preformed Sponge Rubber and Cork Expansion Joint Fillers for Concrete Paving and Structural Construction
ASTM D 4021	(1992) Glass-Fiber-Reinforced Polyester Underground Petroleum Storage Tanks

NATIONAL FIRE PROTECTION ASSOCIATION (NFPA)

NFPA 30	(2003) Flammable and Combustible Liquids Code
NFPA 30A	(2003) Code for Motor Fuel Dispensing Facilities and Repair Garages
NFPA 31	(2001) Installation of Oil Burning Equipment
NFPA 70	(2002) National Electrical Code

STEEL TANK INSTITUTE (STI)

STI P3	(2002) STI-P3 (R) System for External Corrosion Protection of Underground Storage Tanks

THE SOCIETY FOR PROTECTIVE COATINGS (SSPC)

SSPC SP 5	(2000) White Metal Blast Cleaning

U.S. DEPARTMENT OF DEFENSE (DOD)

MIL-C-4556	(Rev F; Notice 1) Coating Kit, Epoxy, for Interior of Steel Fuel Tanks

U.S. GENERAL SERVICES ADMINISTRATION (GSA)

FS A-A-60005	(Basic) Frames.Covers, Gratings, Steps, Sump and Catch Basin, Manhole

U.S. NATIONAL ARCHIVES AND RECORDS ADMINISTRATION (NARA)

29 CFR 1910.1200	Hazard Communication

UNDERWRITERS LABORATORIES (UL)

UL 1316	(1994; Rev Apr 1996) Glass-Fiber-Reinforced Plastic Underground Storage Tanks for Petroleum Products, Alcohols, and Alcohol-Gasoline Mixtures
UL 1746	(1993; Rev thru Feb 2002) External Corrosion Protection Systems for Steel Underground Storage Tanks
UL 58	(1996; Rev thru Jul 1998) Steel Underground Tanks for Flammable and Combustible Liquids
UL 674	(2003) Electric Motors and Generators for Use in Division 1 Hazardous (Classified) Locations
UL 698	(1995; Rev thru Mar 1999) Industrial Control Equipment for Hazardous (Classified) Locations
UL 886	(1994; Rev thru Apr 1999) Outlet Boxes and Fittings for Use in Hazardous (Classified) Locations

1.2 DEFINITION

a. Year 2000 compliant - means computer controlled facility components that accurately process date and time data (including, but not limited to, calculating, comparing, and sequencing) from, into, and between the twentieth and twenty-first centuries, and the years 1999 and 2000 and leap year calculations.

1.3 QUALITY ASSURANCE

1.3.1 Permitting

Contractor shall obtain necessary permits in conjunction with installation of underground petroleum storage tanks as may be required by federal, state, or local authority. Submit a copy of permits to the Contracting Officer.

1.3.2 Registration

Contractor shall obtain required tank registration forms from governing regulatory agencies. Forms shall be completed and provided to the Contracting Officer and installation environmental office 30 days after contract award for their submission to the regulatory agency.

1.3.3 Licensed Personnel

Personnel required to install underground fuel storage tanks shall be licensed/certified by the state when the state requires licensed installers. Submit a copy of license/certification to the Contracting Officer.

1.3.4 Manufacturer's Certification

Tank installers shall be certified by the tank manufacturer on installation procedures. Submit certification from the tank manufacturer to the Contracting Officer.

1.3.5 Safety

Ensure employees are trained in the requirements of 29 CFR 1910.1200and understand the information contained in the material safety data sheets for their protection against toxic and hazardous chemical effects.

1.4 SUBMITTALS

Government approval is required for submittals with a "G" designation; submittals not having a "G" designation are [for Contractor Quality Control approval.][for information only. When used, a designation following the "G" designation identifies the office that will review the submittal for the Government.] The following shall be submitted in accordance with Section 01330 SUBMITTAL PROCEDURES:

SD-03 Product Data

Tanks

Accessories

Leak detection system

Material safety data sheets

SD-06 Test Reports

Delivery tank tightness

Leak monitoring system

Cathodic protection continuity

SD-07 Certificates

Year 2000 (Y2K) Compliance Warranty[; G][; G, [_____]]

Permits

Tank registration forms

Personnel license/certification

Manufacturer's certification

SD-08 Manufacturer's Instructions

Tank installation

SD-10 Operation and Maintenance Data

Tanks, Data Package 1

Leak detection system, Data Package 2

Submit in accordance with Section 01781 OPERATION AND MAINTENANCE DATA.

1.5 QUALITY ASSURANCE

1.5.1 Required Data

Provide six copies of material safety data sheets (MSDS) for materials to be used at the job site in accordance with 29 CFR 1910.1200.

1.6 WARRANTY

1.6.1 Year 2000 (Y2K) Compliance Warranty

For each product, component and system specified in this section as a "computer controlled facility component" provide a statement of Y2K compliance warranty for the specific equipment. The contractor warrants that each hardware, software, and firmware product delivered under this contract and listed below shall be able to accurately process date and time data (including, but not limited to, calculating, comparing, and sequencing) from, into, and between the twentieth and twenty-first centuries, and the years 1999 and 2000 and leap year calculations to the extent that other computer controlled components, used in combination with the computer controlled component being acquired, properly exchange data and time data with it. If the contract requires that specific listed products must perform as a system in accordance with the foregoing warranty, then that warranty shall apply to those listed products as a system. The duration of this warranty and the remedies available to the Government for breach of this warranty shall be defined in, and subject to, the terms and limitations of the contractor's standard commercial warranty or warranties contained in this contract, provided that, notwithstanding any provisions to the contrary, in such commercial warranty or warranties, the remedies available to the Government under this warranty shall include repair or replacement of any listed product whose non-compliance is discovered and made known to the contractor in writing within one year (365 days) after acceptance. Nothing in this warranty shall be construed to limit any rights or remedies the Government may otherwise have under this contract, with respect to defects other that Year 2000 performance.

PART 2 PRODUCTS

2.1 Y2K Compliant Products

Provide computer controlled facility components, specified in this section, that are Year 2000 compliant (Y2K). Computer controlled facility components refers to software driven technology and embedded microchip technology. This includes, but in not limited to, telecommunications switches, utility monitoring and control systems, fire detection and suppression systems, alarms, security systems, and other facilities control systems utilizing microcomputer, minicomputer, or programmable logic controllers.

2.2 FUEL STORAGE TANKS

Underground fuel storage tanks shall be double-wall horizontal type conforming to NFPA 30, NFPA 30A, and NFPA 31. Capacity as indicated. Outer tank shall enclose and provide leak containment across the total surface of the inner main storage tank by being physically separated from the inner primary containment tank by standoffs; where, the inner tank is completely contained within the outer tank. Provide automatic and manual monitoring of interstitial or annular space between inner and outer walls of tank to detect unauthorized release of hydrocarbons or intrusion of water flow from surrounding soil. A leak at any point on the inner or outer wall shall be detectable. Design and construction of tanks shall comply with UL 1316, ASTM D 4021, STI P3 Type II, or UL 58 Type II with UL 1746 external protection. Tanks constructed with lap shell or head joints in accordance with UL 58 shall be continuous fillet welded; both on the interior and exterior surfaces.

2.3 TANK ACCESSORIES

2.3.1 Manholes

Provide a minimum of one [750] [900] mm [30] [36] inch minimum inside diameter size access manhole. Each manhole shall have a matching flanged watertight cover conforming to FS A-A-60005. Provide manhole extensions around each manhole of such a length to [extend 200 mm 8 inches above grade] [be flush with the finished grade]. Provide manhole extensions with watertight covers conforming to FS A-A-60005. Piping manholes shall be the same as access manholes with extensions. Provide manways around each piping connection on the tank to prevent soil contamination due to a faulty connection. Combination of piping connections may be grouped in a single manway. Provide piping in accordance with Section 15192N FUEL OIL PIPING.

2.3.2 Fill Connection

Provide fill line with an overfill protection device which automatically shut off fuel supply into the tank when the tank is 95 percent full to each underground storage tank and shall enter at the top of the tank. Fill line shall be 100 mm 4 inch minimum diameter and extend to within 150 mm 6 inches of tank bottom. From top of tank, fill line shall extend vertically or shall slope upward on a uniform grade and connected to a tight fit fill adapter with a locking type cap. Tight fit fill adapter shall be bronze, fitted with a fluoroelastomer gasket suitable for fuel being provided. Adapter shall match the fill elbow on the delivery hose to prevent vapor emissions at the fill connection. Provide a 11.3 liters 3 gallon minimum fill port containment unit for the fill adapter that allows differential

settlement between tank and ground surface.

2.3.3 Suction Connection

Provide suction line located at the opposite end of tank from fill line. Suction line shall be 100 mm 4 inch minimum diameter and extend to within 100 mm 4 inches of the tank bottom unless indicated otherwise.

2.3.4 Atmospheric Vent

Provide an atmospheric vent conforming to applicable requirements of NFPA 30 or NFPA 30A. Vent pipe shall slope back to tank, terminate at least 3.66 m 12 feet above grade or 0.61 m 2 feet above roofs of adjacent buildings, and located so that discharged vapors will not enter building openings, under building eaves, or downspouts. Provide each tank storing products having a vapor pressure greater than 6.9 kPag one psig with a vent terminal outlet with a pressure and vacuum relief breather valve to ensure vapor recirculation between fuel delivery truck and storage tank. Provide dry disconnect adapter to interconnect tank vent system with the delivery truck vapor space. Size of truck vent line connection shall match equipment connections on fuel delivery truck. Provide each tank storing products having a vapor pressure less than 6.9 kPag one psig with a flame arrestor and sized in accordance with NFPA 30.

2.3.5 Clean-Out and Gage Connection

Provide a combination clean-out and gage connection with each tank and combination shall consist of a 50 mm 2 inch vapor-tight gage box and a 50 mm 2 inch pipe extending downward through top of tank to within 75 mm 3 inches of tank bottom. Manhole outside gage box shall be cast iron and shall be installed in a concrete anchor block. Provide quick opening top lid and malleable iron wrench for removing lid. Provide clean-out and gage pipe assembly with a locking type cap. Provide entire length of pipe inside the tank with 13 mm 1/2 inch wide by 300 mm 12 inch long slots at alternate locations.

2.3.6 Tank Gages

[Provide each tank with a remote reading mechanically-actuated float gage. Provide float gage unit with electrical contacts for high and low level audible alarm settings. High level setting shall be 90 percent capacity of tank.] [Provide each tank with a float-operated direct reading tank gage. Gage shall fit a 100 mm 4 inch tank opening and terminate with a sealed cap and body assembly located in a manhole designed to allow for differential settlement of tank and pavement. Gage shall have dual tapes and floats to allow reading product level and water level independently. Provide means to wipe condensate (fogging) from viewing glass when reading gage.]

2.3.7 Vapor Recovery Connections

Provide each underground storage tank with vapor recovery connections to receive vapor recovery lines from fuel dispensing unit and provide vapor discharge to tank truck during filling operations. Vapor recovery connections are not required on tanks with products having a vapor pressure less than 6.9 kPag one psig.

2.3.8 Sounding Rod

Provide wood sounding rod of required length, evenly graduated and marked to read level of fuel remaining in tank in mm inches. Rod shall be seasoned maple or other close grained wood. Tank end of rod shall have a non-sparking cap. Provide two charts showing tank capacity in liters U.S. gallons in 3 mm 1/8 inch increments.

2.3.9 Sounding Rod Connection

Weld a 300 by 300 by 6 mm 12 by 12 by 1/4 inch thick striker plate directly below rod opening inside steel tanks. On fiberglass reinforced plastic (FRP) tanks provide a 300 by 350 by 6 mm 12 by 14 by 1/4 inch thick aluminum plate laminated on inside bottom surface of tank directly below gauging opening.

2.3.10 Dielectric Bushings

Provide nylon dielectric bushings on metallic piping connections to steel tanks.

2.3.11 Petroleum Heating Equipment

[Provide vertical type heater installed through a [750] [900] mm [30] [36] inch diameter manhole in top of tank. Weld pipe connections to manhole cover. Entire assembly shall be removable as a unit. Heater shall have capacity to heat [_____] L/s gpm of No. [_____] fuel oil from [_____] to [_____] degrees C degrees F when supplied with [[_____] kPag psig steam] [[_____] L/s gpm of [_____] degrees C degree F hot water]. Coil shall have steel tubes designed for working pressure of [_____] kPag psig. Coil shall extend to within 150 mm 6 inches of the tank bottom and shall surround oil suction line. Provide heater with bottom or side suction, inlet and outlet, drains, vent, thermometer, and pressure gage.]

[Provide shell and tube heater with the shell, containing petroleum, constructed of steel with steel or cast iron heads and 19 mm 3/4 inch O.D. by 16 BWG steel tubes with removable bundles rated for [1034] [_____] kPa [150] [_____] psig working pressure. Construct unit in accordance with ASME BPVC SEC VIII D1. Heater shall have necessary heating medium connections such as inlet and outlet, drain, vent, thermometer, and pressure gage. Heater shall have capacity to heat [_____] L/s gpm of No. [_____] fuel oil from [_____] to [_____] degrees C F when supplied with [[_____] kPa psig steam] [[_____] L/s gpm of [_____] degrees C degrees F hot water].]

[Provide electric heater constructed with steel shell and steel flanges designed for [_____] kPa psig. Heater shall have sufficient capacity to heat [_____] L/s gpm of No. [_____] fuel oil from [_____] to [_____] degrees C F while operating on [_____] volts, [_____] phase, [_____] hertz electric service. Control electric heater by a magnetic starter with a manually operated "on-off" switch in series with a thermostatic control with an adjustable range of plus or minus 20 percent of the above discharge temperature.]

2.3.12 Cathodic Protection

Provide steel tanks with a cathodic protection system as specified in Section 13110N CATHODIC PROTECTION BY GALVANIC ANODES. Cathodic protection is not required for steel tanks with UL 1746 protective coatings.

2.4 LEAK DETECTION SYSTEM

Provide a continuous surveillance leak detection system suitable for operation in a NFPA 70, Class l, Division l, Group D environment and located in the leak containment space between the interior and exterior walls of double-wall tanks. System shall detect leakage into containment space by monitoring interstitial pressure, vacuum, or liquid level variations electronically. A liquid sensor in a dry interstitial space will not be acceptable. Sensor output and transmission shall be electronic. Liquids used in containment space shall contain a corrosion inhibitor. Sensors shall be compatible with and detect leakage of materials stored in the tank at a rate of 0.00001 L/s 0.1 gallons per hour with a 95 percent probability of detecting this size leak and a five percent probability of declaring the tank leaking at this rate when, in fact, it may be leaking less as well as ground water which may leak through the outer shell. [System shall be capable of monitoring [_____] zones through use of one central remote panel.] Panel shall be in a NEMA enclosure suitable for the environment and an audible and visual alarm for each zone and battery backup capable of operating the system continuously for a minimum of 48 hours. Panel shall incorporate a self-test system which permits operator verification of proper operation of leak detection equipment. Mount panel where shown on the drawings. Enclose underground cable in PVC coated conduit [isolated from the tanks with a dielectric fitting]. Provide instructions and equipment required for calibration of the leak detection system and manufacturer's recommended calibration maintenance schedule.

2.5 INTERIOR PROTECTIVE COATING FOR STEEL TANKS

[Provide each tank with an interior protective coating conforming to MIL-C-4556 from the tank bottom up to 450 mm 18 inches off the bottom. Interior coating shall be a two-coat epoxy coating system consisting of a prime coat and a finish coat to achieve a total dry film thickness of not less than 0.15 mm 6 mils. Apply coating system in accordance with instructions from the coating manufacturer for application, including surface preparation, application equipment, and appropriate safety precautions. Surface preparation for the area to be coated shall include the following:

a. Grind rough surfaces on welded seams, sharp edges, and corners to a minimum of a 3 mm 1/8 inch radius.

b. Abrasive blast surfaces to white metal in accordance with SSPC SP 5.

c. Clean blasted surfaces to remove oil, dust, sand, or other blasting residue and moisture.

d. Apply prime coat within eight hours after cleaning. If visible rusting occurs after cleaning, regardless of the time interval, re-blast rusted surfaces prior to applying primer coat.

Prepare and mix primer and finish coats in accordance with the manufacturers written instructions and apply following manufacturers instructions, allowing proper curing time between prime and finish coats. After completion of finished coat, surfaces shall be inspected by the Contractor for pinholes, skips, inadequate coating thickness, and other defects. Repair imperfections found in accordance with the coating manufacturers instructions.]

[Provide the entire interior of steel fuel storage tank, including tank and piping manholes, tank nozzles, manhole covers, sump, and interior ladders (if provided) shall be given an interior protective coating in accordance with Section 09970 INTERIOR COATING OF WELDED STEEL PETROLEUM FUEL TANKS.]

2.6 NAMEPLATES

Each major item of equipment shall have the manufacturer's name, address, type or style, model or serial number, and catalog number on a plate secured to the item of equipment.

PART 3 EXECUTION

3.1 EARTHWORK

Excavation and backfilling for tanks shall be as specified in Section 02300 EARTHWORK.

3.2 DELIVERY TIGHTNESS TEST

Pneumatically test the interstitial space of each tank to 20.68 kPag 3 psig. Maintain this pressure and apply soapsuds or equivalent material to the exterior of the tank. Visually inspect for leaks. Repair leaks in accordance with the manufacturer's instructions.

3.3 STORAGE TANK INSTALLATION

Tank installation shall be in accordance with NFPA 30, NFPA 30A, and NFPA 31 and performed by personnel certified by the tank manufacturer and State Regulations. Install manhole extensions and tank connection access pits to prevent load transfer from the surface to the tank shell. Position tanks so that fuel discharge pipes slope up toward fuel outlet. Each tank fill, clean-out and gage connection, and access manway shall [extend 200 mm 8 inches above finished grade] [be flush with finished grade]. Where tanks are installed under a paved surface, tank connections shall terminate in manhole extensions with tops flush with finished paved surface. Position tanks on a 1 mm per 100 mm 1/8 inch per foot slope with fill port and leak detection sensor located at the low end and vent connection at the high end. Holiday test steel tank coating. Defects found shall be corrected and the tank re-tested prior to backfill. Provide a minimum 300 mm 12 inch thickness of fill material between the bottom of tank and top of the concrete hold-down pad as recommended by the manufacture. Provide fiber glass reinforced plastic hold-down straps and corrosion resistant accessories as recommended by the FRP or composite tank manufacturer. Anchor steel tanks to reinforced concrete mats, separated by fill material and held in place with steel anchor straps. Coat straps, turnbuckles, and anchors to resist corrosion. Provide 25 mm one inch wide insulating dielectric straps conforming to ASTM D 1751 or ASTM D 1752 between tank shell and metal straps. Inspect steel tank anodes to ensure integrity during backfill operations.

3.4 ELECTRICAL WORK

Provide switches and devices necessary for controlling leak monitoring equipment. Wiring, fittings, and components shall be explosion-proof in compliance with applicable requirements of UL 674, UL 698, and UL 886 for Class I, Division l, Group C and D hazardous locations. Electrical

installations shall conform to requirements of NFPA 70.

3.5 INSPECTION

Visually inspect the interior of fuel storage tanks that have an accessible manhole to insure it is free of debris before fuel is placed inside. Prior to entry insure a safe atmosphere exists.

3.6 HYDROCARBON AND WATER MONITORING SYSTEM TEST

Activate leak monitoring system and test in accordance with manufacturer's instruction.

3.7 CATHODIC PROTECTION

Test to prove continuity of electrical connections prior to backfilling coated steel tanks which do not have an exterior coating complying to UL 1746.

3.8 HIGH LEVEL ALARM TEST

Fill each tank with appropriate product and verify the high level alarm functions. Verify overfill protection device functions. The Government will provide product.

-- End of Section --

****
USACE / NAVFAC / AFCESA UFGS-15193N (September 1999)

Preparing Activity: NAVFAC Replacing without revision
NFGS of same number and date

UNIFIED FACILITIES GUIDE SPECIFICATIONS

References are in agreement with UMRL dated 25 June 2004
****

SECTION TABLE OF CONTENTS

DIVISION 15 - MECHANICAL

SECTION 15193N

GASOLINE/DIESEL DISPENSING SYSTEMS

09/99

PART 1 GENERAL

1.1 REFERENCES
1.2 DEFINITION
1.3 VAPOR RECOVERY SYSTEM DESCRIPTION
1.4 SUBMITTALS
1.5 QUALITY ASSURANCE
1.5.1 Standard Products
1.5.2 Permitting
1.5.3 Licensed Personnel
1.5.4 Safety
1.5.5 Vapor Recovery System and System Components
1.6 WARRANTY
1.6.1 Year 2000 (Y2K) Compliance Warranty

PART 2 PRODUCTS

2.1 Y2K Compliant Products
2.2 PRODUCT CARRIER PIPE AND FITTINGS
2.2.1 Steel Pipe
2.2.2 Fiberglass and Flexible Pipe
2.2.3 Fiberglass Pipe Fittings
2.2.4 Flexible Pipe Fittings
2.2.5 Joint Compound
2.2.6 Flange Gaskets
2.2.7 Flexible Connectors
2.3 DOUBLE-WALL SECONDARY CONTAINMENT PIPING
2.4 VALVES
2.5 LEAK DETECTION MONITORING SYSTEM
2.6 DISPENSING SYSTEM
2.6.1 Product Dispensing Units
2.6.2 Management Control System
2.6.2.1 Operating Functions
2.6.2.2 Control and Management Functions
2.6.2.3 Control Console
2.6.2.4 Display

2.6.2.5 Power
2.7 RECEIPT/TOTALS PRINTER
2.7.1 Receipt and Report Printout Types
2.7.1.1 Customer Receipt
2.7.1.2 Shift Change Totals
2.7.1.3 Unit Price Summary
2.7.1.4 Station Programming Data
2.7.1.5 Diagnostic Messages
2.8 ABOVE GROUND PIPING
2.9 BURIED WARNING AND IDENTIFICATION TAPE
2.10 PETROLEUM STORAGE TANKS

PART 3 EXECUTION

3.1 EARTHWORK
3.2 PIPING
3.2.1 Installing Piping
3.2.2 Installing Dispenser
3.3 PROTECTIVE COATING FOR UNDERGROUND STEEL PIPE
3.3.1 Inspection of Pipe Coatings
3.4 CATHODIC PROTECTION
3.5 ELECTRICAL WORK
3.6 Pneumatic Test
3.7 FLUSHING AND OPERATIONAL TEST
3.8 LEAK DETECTION MONITORING SYSTEM TEST
3.9 SCHEDULE

-- End of Section Table of Contents --

****

USACE / NAVFAC / AFCESA | **UFGS-15193N (September 1999)**

Preparing Activity: NAVFAC | **Replacing without revision NFGS of same number and date**

UNIFIED FACILITIES GUIDE SPECIFICATIONS

References are in agreement with UMRL dated 25 June 2004

****

SECTION 15193N

GASOLINE/DIESEL DISPENSING SYSTEMS
09/99

****

NOTE: This guide specification covers the requirements for gasoline/diesel dispensing systems as used at service stations.

Comments and suggestions on this guide specification are welcome and should be directed to the technical proponent of the specification. A listing of technical proponents, including their organization designation and telephone number, is on the Internet.

Recommended changes to a UFGS should be submitted as a Criteria Change Request (CCR).

Use of electronic communication is encouraged.

Brackets are used in the text to indicate designer choices or locations where text must be supplied by the designer.

****

PART 1 GENERAL

1.1 REFERENCES

****

NOTE: Issue (date) of references included in project specifications need not be more current than provided by the latest guide specification. Use of SpecsIntact automated reference checking is recommended for projects based on older guide specifications.

****

The publications listed below form a part of this specification to the extent referenced. The publications are referred to within the text by the basic designation only.

AMERICAN PETROLEUM INSTITUTE (API)

API Spec 5L (2000) Line Pipe

ASME INTERNATIONAL (ASME)

ASME B16.11	(2002) Forged Fittings, Socket-Welding and Threaded
ASME B16.15	(1985; R 1994) Cast Bronze Threaded Fittings Classes 125 and 250
ASME B16.21	(1992) Nonmetallic Flat Gaskets for Pipe Flanges

ASTM INTERNATIONAL (ASTM)

ASTM A 53	(1999b) Pipe, Steel, Black and Hot-Dipped, Zinc-Coated, Welded and Seamless

MANUFACTURERS STANDARDIZATION SOCIETY OF THE VALVE AND FITTINGS INDUSTRY (MSS)

MSS SP-80	(2003) Bronze Gate, Globe, Angle and Check Valves

NACE INTERNATIONAL (NACE)

NACE RP0274	(1998) High Voltage Electrical Inspection of Pipeline Coatings

NATIONAL FIRE PROTECTION ASSOCIATION (NFPA)

NFPA 30	(2003) Flammable and Combustible Liquids Code
NFPA 30A	(2003) Code for Motor Fuel Dispensing Facilities and Repair Garages
NFPA 70	(2002) National Electrical Code

U.S. DEPARTMENT OF DEFENSE (DOD)

MIL-G-3056	(Rev F; Int Am 3; Notice 1) Gasoline, Automotive, Combat

U.S. GENERAL SERVICES ADMINISTRATION (GSA)

FS A-A-52557	(Rev A)) Fuel Oil, Diesel; for Posts, Camps and Stations
FS L-C-530	(Rev C) Coating, Pipe, Thermoplastic Resin

U.S. NATIONAL ARCHIVES AND RECORDS ADMINISTRATION (NARA)

29 CFR 1910.1200	Hazard Communication

UNDERWRITERS LABORATORIES (UL)

UL 330	(1996; Rev thru Feb 2000) Hose and Hose Assemblies for Dispensing Flammable Liquids
UL 567	(2003) emergency Breakaway Fittings,

	Swivel Connectors and Pipe-Connection Fittings for Petroleum Products and LP-Gas
UL 674	(2003) Electric Motors and Generators for Use in Division 1 Hazardous (Classified) Locations
UL 698	(1995; Rev thru Mar 1999) Industrial Control Equipment for Hazardous (Classified) Locations
UL 886	(1994; Rev thru Apr 1999) Outlet Boxes and Fittings for Use in Hazardous (Classified) Locations

1.2 DEFINITION

a. Year 2000 compliant - means computer controlled facility components that accurately process date and time data (including, but not limited to, calculating, comparing, and sequencing) from, into, and between the twentieth and twenty-first centuries, and the years 1999 and 2000 and leap year calculations.

1.3 VAPOR RECOVERY SYSTEM DESCRIPTION

Contractor shall provide a complete and operational Stage II vapor recovery system which meets the air quality laws of the State of [_____] and local regulations. System shall be certified by the California Air Resources Board (CARB), and shall be tested to be 95 percent efficient in controlling VOC emissions during refueling of motor vehicles. Vapor recovery system shall be of the [balance] [aspirator assist] [vacuum assist] design.

1.4 SUBMITTALS

****

NOTE: Submittals must be limited to those necessary for adequate quality control. The importance of an item in the project should be one of the primary factors in determining if a submittal for the item should be required.

A "G" following a submittal item indicates that the submittal requires Government approval. Some submittals are already marked with a "G". Only delete an existing "G" if the submittal item is not complex and can be reviewed through the Contractor's Quality Control system. Only add a "G" if the submittal is sufficiently important or complex in context of the project.

For submittals requiring Government approval on Army projects, a code of up to three characters within the submittal tags may be used following the "G" designation to indicate the approving authority. Codes for Army projects using the Resident Management System (RMS) are: "AE" for Architect-Engineer; "DO" for District Office (Engineering Division or other organization in the District Office); "AO" for Area Office; "RO" for

Resident Office; and "PO" for Project Office. Codes following the "G" typically are not used for Navy projects.

Submittal items not designated with a "G" are considered as being for information only for Army projects and for Contractor Quality Control approval for Navy projects.

****

Government approval is required for submittals with a "G" designation; submittals not having a "G" designation are [for Contractor Quality Control approval.][for information only. When used, a designation following the "G" designation identifies the office that will review the submittal for the Government.] The following shall be submitted in accordance with Section 01330 SUBMITTAL PROCEDURES:

SD-02 Shop Drawings

Dispensing system

Vapor recovery system

SD-03 Product Data

Pipe and fittings

Valves

Pumps

Dispensing system

Leak detection monitoring system

Filters

Receipt/totals printer

SD-06 Test Reports

Pneumatic test

Leak detection monitoring system test

Operational test

SD-07 Certificates

Permits

Personnel license/certification

Year 2000 (Y2K) Compliance Warranty[; G][; G, [_____]]

Vapor recovery system and system components

SD-10 Operation and Maintenance Data

Pumps, Data Package 2

Dispensing system, Data Package 2

Leak detection monitoring system, Data Package 1

Submit in accordance with Section 01781 OPERATION AND MAINTENANCE DATA.

1.5 QUALITY ASSURANCE

1.5.1 Standard Products

Material and equipment shall be standard products of a manufacturer regularly engaged in the manufacture of the products. Materials shall be resistant to diesel fuel conforming to requirements of FS A-A-52557; and gasoline conforming to MIL-G-3056. Completed installation shall conform to applicable requirements of NFPA 30 and NFPA 30A.

1.5.2 Permitting

Contractor shall obtain necessary permits in conjunction with installation of underground petroleum piping as may be required by federal, state, or local authority. Submit copy of permits to the Contracting Officer.

1.5.3 Licensed Personnel

Personnel required to install underground petroleum piping shall be licensed/certified by the state when the state requires licensed installers. Submit copy of license/certification to the Contracting Officer.

1.5.4 Safety

Ensure employees are trained in requirements of 29 CFR 1910.1200 and understand information contained in material safety data sheets for their protection against toxic and hazardous chemical effects.

1.5.5 Vapor Recovery System and System Components

Submit copies of CARB Executive Order verifying CARB certification.

1.6 WARRANTY

1.6.1 Year 2000 (Y2K) Compliance Warranty

For each product, component and system specified in this section as a "computer controlled facility component" provide a statement of Y2K compliance warranty for the specific equipment. The contractor warrants that each hardware, software, and firmware product delivered under this contract and listed below shall be able to accurately process date and time data (including, but not limited to, calculating, comparing, and sequencing) from, into, and between the twentieth and twenty-first centuries, and the years 1999 and 2000 and leap year calculations to the extent that other computer controlled components, used in combination with the computer controlled component being acquired, properly exchange data and time data with it. If the contract requires that specific listed products must perform as a system in accordance with the foregoing warranty, then that warranty shall apply to those listed products as a

system. The duration of this warranty and the remedies available to the Government for breach of this warranty shall be defined in, and subject to, the terms and limitations of the contractor's standard commercial warranty or warranties contained in this contract, provided that, notwithstanding any provisions to the contrary, in such commercial warranty or warranties, the remedies available to the Government under this warranty shall include repair or replacement of any listed product whose non-compliance is discovered and made known to the contractor in writing within one year (365 days) after acceptance. Nothing in this warranty shall be construed to limit any rights or remedies the Government may otherwise have under this contract, with respect to defects other that Year 2000 performance.

PART 2 PRODUCTS

2.1 Y2K Compliant Products

****
NOTE: To ensure that buildings' systems continue to function beyond Year 2000, the following paragraph must be included when this section is part of a construction contract. For more information on Y2K, see these web sites on the Internet. http://www.doncio.navy.mil/y2k/year2000.htm, the Year 2000 homepage of the Department of the Navy Chief Information Officer (DONCIO); http://www.itpolicy.gsa.gov/mks/yr2000.legal.htm, the General Services Administration (GSA) Chief Information Officer (CIO) homepage for Y2K procurement, contracting, and legal issues; http://y2k.lmi.org/gsa/y2kproducts contains information on vendor product compliance
****

Provide computer controlled facility components, specified in this section, that are Year 2000 compliant (Y2K). Computer controlled facility components refers to software driven technology and embedded microchip technology. This includes, but in not limited to, utility monitoring and control systems, fire detection and suppression systems, alarms, and other facilities control systems utilizing microcomputer, minicomputer, or programmable logic controllers.

2.2 PRODUCT CARRIER PIPE AND FITTINGS

2.2.1 Steel Pipe

Black carbon steel, ASTM A 53, Type E or S, Grade A or B, or API Spec 5L, seamless or electric-weld, Grade A or B, Schedule 40.

2.2.2 Fiberglass and Flexible Pipe

Products shall be listed by Underwriters Laboratories for service intended. Limit fiberglass or flexible piping to buried service only and at pressures not exceeding that marked on pipe.

2.2.3 Fiberglass Pipe Fittings

Provide fiberglass pipe fittings supplied by pipe manufacturer with adhesives compatible with product. Threading of fiberglass pipe or mechanical pipe couplings will not be permitted.

2.2.4 Flexible Pipe Fittings

Provide bronze mechanical couplings supplied by pipe manufacturer.

2.2.5 Joint Compound

Joint compound for piping system shall be resistant to water and be suitable for use with fuel containing 40 percent aromatics.

2.2.6 Flange Gaskets

Provide non-asbestos compressed material in accordance with ASME B16.21, 1.60 mm 1/16 inch thickness, full face or self-centering flat ring type. Gaskets shall contain aramid fibers bonded with styrene butadiene rubber (SBR) or nitrile butadiene rubber (NBR). NBR binder shall be used for hydrocarbon service.

2.2.7 Flexible Connectors

****
NOTE: Listed flexible connectors may be used when allowed by NFPA 30 and when approved by local codes as an alternative for swing joints.
****

Flexible metal hose, corrugated type with braided wire sheath covering, close-pitch annular corrugations, rated for working pressure of at least 862 kPa (gage) 125 psig, 305 mm 12 inch minimum live length, threaded end connections and shall conform to requirements of UL 567. Metal for hose and braided wire sheath shall be ANSI 300 series stainless steel.

2.3 DOUBLE-WALL SECONDARY CONTAINMENT PIPING

****
NOTE: Underground piping which carries petroleum shall be double-wall constructed. Vent lines may be of single-wall construction. A leak monitoring system shall also be included to monitor the annular space between the pipe walls.
****

Provide double-wall containment piping system. Exterior containment pipe shall be compatible with transported fluid and sized to contain 110 percent of the total volume of the primary inner pipe or pipes and additional equipment required, such as leak detection cables. Containment pipe containing multiple product carrying pipes shall have adequate spacing and supports for the product carrying piping to ensure unhindered performance of the leak detection system. Steel secondary containment piping shall be factory coated. Coating shall consist of thermoplastic resin conforming to FS L-C-530.

2.4 VALVES

Valves shall be Class 150. Gate valves shall be wedge disc type, union bonnet, inside screw, rising stem, and shall have threaded ends with an "O"-ring seal. Check valves shall be synthetic disc, swing check type with screwed ends. Valve body shall be bronze. Gate and check valves shall conform to MSS SP-80. Provide UL listed emergency shut-off valve in

accordance with NFPA 30 with stainless steel main spring, fusible link, and test port.

2.5 LEAK DETECTION MONITORING SYSTEM

****
NOTE: Indicate panel location on drawings.
****

Provide continuous surveillance leak detection system suitable for operation in an NFPA 70, Class l, Division l, Group D environment and located in the leak containment space between interior and exterior walls of double-wall piping. System shall detect leakage into containment space by monitoring interstitial pressure, vacuum variations, or sense hydrocarbon vapors electronically. Sensor output and transmission shall be electronic. Sensors shall be compatible with and detect leakage of materials stored in pipe at a rate of 0.105 milliliter per second 0.1 gallons per hour with 95 percent probability of detecting this size leak and five percent probability of declaring pipe leaking at this rate when, in fact, it may be leaking less as well as ground water which may leak through secondary containment. [System shall be capable of monitoring [_____] zones through use of one central remote panel.] Panel shall be in a NEMA enclosure suitable for the environment and have an audible and visual alarm for each zone and include acknowledgement switch and rechargeable battery backup capable of operating the system continuously for a minimum of 48 hours. Panel shall incorporate self-test system which permits operator verification of proper operation of leak detection equipment. Mount panel as indicated. Enclose underground cable in PVC coated conduit. Provide instructions and equipment required for calibration of leak detection system and manufacturer's recommend calibration maintenance schedule.

2.6 DISPENSING SYSTEM

Computer controlled dispensing system shall consist of product dispensing units, management control systems, printers, necessary computers, microprocessors, wiring, cabling, and accessory equipment.

2.6.1 Product Dispensing Units

Provide computer controlled, lighted, [single] [double] sided, remote type, with [one] [two] [three] [four] [_____] hose outlets [each] suitable for single product delivery flow rate of 0.76 liter per second 12 gallons per minute from each nozzle. Steel frame shall be capable of resisting normal vertical and lateral loads and secured to dispensing island with at least two 15 mm 1/2 inch anchor bolts. Exterior panels shall be either stainless steel or steel with baked enamel finish, or combination of the two. Provide manufacturer's standard microprocessor which has the following functions:

a. Displays: Solid state liquid crystal displays (LCD'S), five-digit cash display to $999.99, with automatic shutdown, and four-digit volume display to 999.9 liters 999.9 gallons.

b. Totalizer: Eight-digit (999,999.99) electronic totalization with identification for each product volume in liters gallons.

c. Price setting: Price-jog keyswitch on each computer housing to enable remote price setting from management control system.

d. Filters: Replaceable filter element on each product line with a nominal filtration efficiency of 0.025 mm 25 microns with a flow rating equal to the rate of the dispensing unit.

e. Backup: Battery backup with automatic charging circuits to hold data for a minimum of three months without recharging. Sales display shall remain visible for 15 minutes after power failure.

f. Accessories: Equip each assembly with accessories such as built-in air eliminators, line check valves, and emergency shut-off valve. Install centering ring or stabilizer bar to ensure proper shearing action for emergency shut-off valve if the dispensing unit is knocked from it's supports.

g. Interlocks: Units shall include nozzle supports interlocked to pump motor control switch to start and stop the pump by nozzle removal and replacement. Provide each unit with interlock switch and valve arrangement that prevents flow of product until meter is reset after dispensing nozzle is returned to holder.

h. Hose: Provide dispensing hose [conforming to UL 330] [of the coaxial vapor recovery type certified by CARB], gasoline and oil resistant, statically grounded, flexible in sub-zero temperatures. Provide a minimum of 3.70 meters 12 feet of hose for each product line on the dispenser. Provide each hose with spring loaded cable to return device attached near mid-length of hose.

****

NOTE: Select nozzle features based on product(s) dispensed, customer requirements, and compatibility with vapor recovery system. Bellowless nozzles may only be used with vacuum assist vapor recovery systems.

****

i. Nozzles: Dispensing nozzles shall be automatic shutoff type, without latch-open device, aluminum body, and full hand insulator to prevent splash-back. [Nozzles shall be CARB certified for Stage II vapor recovery, contain an integral vapor valve [and evacuator], and be of the [bellows] [bellowless] design.] [Vapor recovery nozzles are not required for diesel dispensing systems.]

j. Breakaway device: Provide each product hose with UL listed [and CARB certified] emergency breakaway device designed to retain liquid on both sides of breakaway point. Breakaway device shall have pressure balancing chamber to override line pressure to prevent nuisance breaks caused by a restriction in delivery hose diameter.

****

NOTE: Select type of pump; either submersible or suction type.

****

k. Pumps: [Provide submersible pumps to be located in product storage tanks. Pump and motor combination shall operate efficiently totally submerged in product of storage tank. When pump only is submerged, pump shall be driven by explosion-proof

motor for Class I, Division l, Group D hazardous locations as defined in NFPA 70. Each pump shall have delivery capacity of [_____] liter per second gpm at a total discharge head of [_____] kPa feet Maximum delivery rate at each dispensing unit shall be 0.76 liter per second 12 gpm with one nozzle flowing. Minimum delivery rate at each dispensing unit shall be 1.50 liter per second 24 gpm with two nozzles flowing. Multiple outlet single pump fuel discharge pipeline shall hold pressure of 21 to 34 kPa 3 to 5 psi utilizing back pressure and check relief valves. Install on discharge side of each pump, an approved leak detection device which will provide indication when piping between tank-mounted pump and dispensers are not liquid-tight. Pump inlet shall be horizontal. Provide clearance of not less than 127 mm 5 inches nor more than 178 mm 7 inches between bottom of tank and end of pump.]

[Provide internal gear-type rotary suction pumps with adjustable bypass valves and suction strainers.]

l. Motors: Each motor shall be sized to start and drive equipment at specified capacity and duty cycle without exceeding nameplate rating of motor when operating at proper electrical system voltage. Installation of electrical equipment at dispensers, motors, and pump starter controllers shall be in compliance with Class l, Group D hazardous location.

2.6.2 Management Control System

Provide management control system which furnish computerized control of station fuel dispensing system including operational, control, and management functions from a central control console with displays and separately mounted electronics and data cabinets. Provide functions to provide receipt and report printout types. Each system shall provide the following:

2.6.2.1 Operating Functions

Operate up to [_____] fueling positions with up to [_____] different products. Operate prepay on preset volume or dollar operation with cash or credit pricing. Include two tier pricing with two levels in each tier. Display grade, dispenser number, volume, and sales amount in one sequence. Provide audible signals and flashing indicators to alert operator to customer needs and dispenser status. Provide functions to calculate change if tank is too full to accept prepaid amount.

2.6.2.2 Control and Management Functions

Accumulate, store, and deliver full range of management information including pricing by grades and types of service. Provide totals for up to four shifts by product volume, cash and credit sales, and declining balance inventory.

2.6.2.3 Control Console

Provide the following:

a. Indicators: Call, ready, in-use, used, stopped, unpaid

b. Manager's keyswitch: Key protection for setting operating modes

c. Keyboard: Standard international 11-pad numerical

d. Clock: Real-time operating, showing year, month, day, hour, minute, second

e. Function keys: Pump stop, pump start, mode, unit price, refund, recall, cash/credit, volume, print/enter, clear, credit paid, cash paid, authorize

f. Operating temperature range: 0 to 40 degrees C 32 to 104 degrees F

2.6.2.4 Display

Provide the following with light emitting diodes (LED'S):

a. Operating: Grade, pump number, volume, cash

b. Mode or memory: Mode number, sub-mode, memory data

c. Display indicators: Water, low inventory, new data, mode, prepay/preset, volume, cash, credit, return, price

2.6.2.5 Power

115 volts, 60 Hz.

2.7 RECEIPT/TOTALS PRINTER

Provide printer with the following characteristics:

a. Print speed: 1.25 lines per second

b. Line length: 40 column, 12 characters per 25.40 mm inch

c. Paper: Roll, one- or two-ply, 86 mm 3 3/8 inches wide

d. Spacing: 6 lines per vertical 25.40 mm inch

e. Character types: Upper and lower case, 96-character alpha-numeric, normal and double-width

f. Printing mechanism life: 10 million cycles

g. Power: 115 volts, 60 Hz

2.7.1 Receipt and Report Printout Types

Provide printer and system functions to provide the following receipts and reports.

2.7.1.1 Customer Receipt

a. Time, date, and day of week

b. Name and grade of fuel product

c. Pump number and unit price

d. Total sale by payment method (cash or credit)

e. Total sales volume in gallons or liters

f. Prepaid deposit

g. Discount amount where applicable

h. Transaction number

i. Three line customizable heading

j. Customer receipt available only after dispensing

2.7.1.2 Shift Change Totals

Dollar and volume totals and totalizer readings for current, first, second, and third shift totals.

2.7.1.3 Unit Price Summary

Unit prices for cash and credit, night, day

2.7.1.4 Station Programming Data

List parameters which determine station dispensing system will operate.

a. Prepay or post pay

b. Cash or credit pricing

c. Sales and volume ration limits

2.7.1.5 Diagnostic Messages

Include printer test, last mode entries, system power ON/OFF records, and other information for diagnosing problems by station personnel.

2.8 ABOVE GROUND PIPING

Provide ASTM A 53, Schedule 40, hot-dip galvanized, threaded end connections; with ASME B16.11 hot-dip galvanized or ASME B16.15 bronze threaded fittings above grade at dispensers.

2.9 BURIED WARNING AND IDENTIFICATION TAPE

Provide detectable aluminum foil plastic backed tape or detectable magnetic plastic tape manufactured specifically for warning and identification of buried piping. Tape shall be detectable by electronic detection instrument. Provide tape in rolls, 80 mm 3 inches minimum width, color coded for utility involved, with warning and identification imprinted in bold black letters continuously and repeatedly over entire tape length. Warning and identification shall read "CAUTION BURIED FUEL PIPING BELOW" or similar wording. Provide permanent code and letter coloring unaffected by moisture and other substances contained in trench backfill material. Bury tape with printed side up at a depth 300 mm 12 inches below top surface of earth or top surface of subgrade under pavements.

2.10 PETROLEUM STORAGE TANKS

****
NOTE: Select the applicable section used in the project specifications.
****

See Section [13216 UNDERGROUND PETROLEUM TANKS] [15192N FUEL OIL PIPING].

PART 3 EXECUTION

3.1 EARTHWORK

Excavation and backfilling for tanks and piping shall be as specified in Section 02300 EARTHWORK.

3.2 PIPING

****
NOTE: Piping must maintain the specified minimum pitch and must not be encased in concrete. Most types of pumps normally installed at automotive service stations cannot deliver fuel past a vapor lock. Vapor locks can occur where a portion of the pipe run is installed higher than the pipe elbow below the pump pedestal, especially if the pipe is encased in concrete and absorbs enough heat on warm sunny days to vaporize the fuel.
****

Piping system shall be steel or nonmetallic. Nonmetallic pipe shall be used for buried lines only. Buried lines which carry product shall have double-walled containment system. Each section of underground pipe shall rest solidly on pipe bed. Piping connections to equipment shall be as required by equipment manufacturer. Make tank connections with two elbow swing joints or flexible connectors to allow for differential settlement. Threaded or mechanical joints shall be allowed at termination points of product carrying lines only. Test plug connections of secondary containment piping may be threaded. Clean pipe interior of foreign matter before lowering into trench and keep clean during installation. Pipe shall not be laid in water or when trench or weather conditions are unsuitable. When work is not in progress, close open ends of pipe and fittings so that water, earth, or other substances cannot enter. Replace pipe, fittings, or appurtenances found defective after installation. Make threaded joints with tapered threads and make tight with joint compound; compatible with intended petroleum products, applied to male threads only. This requirement shall not apply for gauging hatch or similar connections directly over the tank where line terminates in a fitting within a manhole designed to allow for differential settling. Flanges shall not be permitted on buried lines.

3.2.1 Installing Piping

Handle pipe and accessories to ensure sound, undamaged condition. Take care not to damage coating when lowering pipe into trench and when backfilling. Install nonmetallic pipe in accordance with pipe manufacturer's instructions. Lay underground pipelines with a minimum pitch of 25 mm per 15 meters one inch per 50 feet. Horizontal sections shall have a minimum coverage of 457 mm 18 inches. Piping shall be free of

traps and shall drain toward tank. Where steel piping is to be anchored, weld pipe to structural steel member of anchor and patch abraded areas with protective coating or covering as specified. Fit piping passing through concrete or masonry construction with sleeves. Each sleeve shall be of sufficient length to pass through entire thickness of associated structural member and large enough to provide a minimum clear distance of 15 mm l/2 inch between pipe and sleeve, except where otherwise indicated. Sleeves through concrete may be 20-gage metal, fiber, or other approved material. Sleeves shall be located on center with piping and fastened in place. Space between sleeves and pipe shall be calked and filled with bituminous plastic cement or mechanical calking units designed for such use.

3.2.2 Installing Dispenser

Install on raised concrete foundation and protect against collision damage. Provide opening in island for product and electrical risers for each dispenser. Fill island riser holes with clean sand. Install dispensers in accordance with manufacturers' instructions and with emergency shut-off valve breaking point level with island surface.

3.3 PROTECTIVE COATING FOR UNDERGROUND STEEL PIPE

Apply protective coating to valves, fittings, and joints not factory coated. Piping installed in valve boxes or manholes shall also receive specified protective coating. Coatings shall consist of thermoplastic resin conforming to FS L-C-530. Apply pipe joint coatings, valve coatings, and field repair material as recommended by manufacturer. Finished thickness of pipe coating system shall be as indicated in TABLE I with a five percent allowable tolerance.

TABLE I (Thickness of Coating)

Outside diameter of pipe (mm)	Thickness in mm (minimum)
15 to 40	0.5842
40 to 73.15	0.6858
7316.114.30	0.8128
over 114.30	0.9144

TABLE I (Thickness of Coating)

Outside diameter of pipe (inches)	Thickness in mils (minimum)
0.50 to 1.50	23
1.50 to 2.88	27
2.89 to 4.50	32
over 4.50	36

3.3.1 Inspection of Pipe Coatings

Repair damage to protective covering during transit and handling before installation. After applying field coating and wrapping inspect entire pipe by an electric holiday detector with impressed current in accordance with NACE RP0274 using full-ring, spring-type coil electrode. Equip holiday detector with a bell, buzzer, or other type of audible signal which sounds when holiday is detected. Repair holidays in protective covering immediately upon detection. Occasional checks of holiday detector

potential will be made by the Contracting Officer to determine suitability of detector. Holiday test and repair holidays prior to introducing fuel into system. Labor materials and equipment necessary for conducting inspection shall be furnished by the Contractor.

3.4 CATHODIC PROTECTION

Provide steel secondary piping systems with cathodic protection as specified in [Section 13110N CATHODIC PROTECTION BY GALVANIC ANODES] [Section 13111N CATHODIC PROTECTION BY IMPRESSED CURRENT]. Cathodic protection for piping system shall be coordinated and compatible with tank corrosion control system.

3.5 ELECTRICAL WORK

Provide switches and devices required for controlling electrical equipment. Pumps shall be wired and ready for connection to power circuit. Wiring, equipment, and fittings shall be explosion-proof in conformance with applicable requirements of UL 674, UL 698, and UL 886 for Class I, Division l, Group C and D hazardous locations. Submit proof of such conformance. Electrical installations shall conform to requirements of NFPA 70.

3.6 Pneumatic Test

Test product carrier piping under pneumatic pressure of at least 1 1/4 times designed working pressure of the particular piping system, but not less than 345 kPa (gage) 50 psig. Test secondary piping under pneumatic pressure of 34 kPa (gage) 5 psig. Joints in secondary piping shall not be made until product carrier pipe is successfully pressure tested. Take care not to exceed pressure rating of various fittings such as the dry break vapor line adapter. Maintain pressure in product carrier piping for at least 2 hours during which there shall be no drop in pressure in each line greater than that allowed for thermal expansion and contraction. Maintain pressure in secondary piping for at least one hour. To facilitate this test, various sections of each piping system may be isolated to test each separately. Furnish tapped test adapted fittings that can be attached to each end of the section of line being tested that will permit direct connection to the piping from air compressor. No taps in line will be permitted. Furnish necessary equipment for testing. Gages shall be subject to testing and approval. In event leaks are detected, repair and repeat tests. Upon satisfactory completion of tests, relieve pressure and seal line. Make provisions to prevent displacement of piping during testing. Keep personnel clear of piping during pneumatic testing. Isolate equipment such as pumps, tanks, and meters from piping system during tests.

3.7 FLUSHING AND OPERATIONAL TEST

Do not install dispensing units during flushing and cleaning of piping. Install temporary piping or hose equipped with a strainer having not less than 40-mesh screen between supply pipe and tank fill connection on tank from which fuel is being pumped. Furnish temporary pump for flushing. Flush each dispensing system with same type of fuel intended for use in system until outflowing fuel is "clean" and "bright": clean means absence of sediment or emulsion; bright refers to fluorescent appearance of fuel that has no cloud or haze. Test each system to demonstrate performance requirements for which it was designed. [Test shall include unloading fuel trucks to demonstrate effectiveness of vapor recovery system.] Operate fuel dispensing equipment to demonstrate capability of fuel pumps to deliver desired flow and draw storage tank contents to level of pump inlet

and to test dispensing nozzle's capability to recirculate vapors from receiving unit back to storage tank. When a portion of each system or a piece of equipment fails to pass tests, make repairs or adjustments and repeat test until satisfactory performance is achieved. Tests shall be witnessed by the Contracting Officer, and the Contractor shall notify the Contracting Officer [_____] days before testing. Furnish calibrated instruments and equipment, as well as the fuel, required to clean and flush each system and to conduct tests. Upon completion of tests replace filters.

3.8 LEAK DETECTION MONITORING SYSTEM TEST

Activate leak monitoring system and test in accordance with manufacturer's instructions.

3.9 SCHEDULE

Some metric measurements in this section are based on mathematical conversion of inch-pound measurement, and not on metric measurement commonly agreed to by the manufacturers or other parties. The inch-pound and metric measurements shown are as follows:

Products	Inch-Pound	Metric
a. Dispensing Unit Flow Rate	= 12 gpm	= 0.76 liters/sec
b. Flange Gaskets Thickness	= 1/16 inch	= 1.60 mm
c. Buried Warning and Identification Tape Width	= 3 inches	= 80 mm

-- End of Section --

SECTION 16375A

ELECTRICAL DISTRIBUTION SYSTEM, UNDERGROUND
02/02

PART 1 GENERAL

1.1 REFERENCES

The publications listed below form a part of this specification to the extent referenced. The publications are referred to in the text by basic designation only.

AMERICAN NATIONAL STANDARDS INSTITUTE (ANSI)

ANSI C119.1	(1986; R 1997) Sealed Insulated Underground Connector Systems Rated 600 Volts
ANSI C12.10	(1997) Electromechanical Watthour Meters
ANSI C12.11	(1987; R 1993) Instrument Transformers for Revenue Metering, 10 kV BIL through 350 kV BIL (0.6 kV NSV through 69 kV NSV)
ANSI C12.4	(1984; R 1996) Mechanical Demand Registers
ANSI C135.30	(1988) Zinc-Coated Ferrous Ground Rods for Overhead or Underground Line Construction
ANSI C29.1	(1988; R 1996) Electrical Power Insulators - Test Methods
ANSI C37.121	(1989; R 1995) Switchgear, Unit Substations Requirements
ANSI C37.16	(2000) Low-Voltage Power Circuit Breakers and AC Power Circuit Protectors - Preferred Ratings, Related Requirements, and Application Recommendations
ANSI C37.46	(1981; R 1992) Power Fuses and Fuse Disconnecting Switches
ANSI C37.50	(1989; R 1995) Switchgear, Low-Voltage AC Power Circuit Breakers Used in Enclosures - Test Procedures
ANSI C37.72	(1987)Manually-Operated, Dead-Front Padmounted Switchgear with Load Interrupting Switches and Separable Connectors for Alternating-Current Systems
ANSI C57.12.13	(1982) Conformance Requirements for Liquid-Filled Transformers Used in Unit

	Installations, Including Unit Substations
ANSI C57.12.21	(1995) Requirements for Pad-Mounted, Compartmental-Type, Self-Cooled, Single-Phase Distribution Transformers with High-Voltage Bushings; (High-Voltage, 34 500 Grd Y/19 920 Volts and Below; Low-Voltage, 240/120; 167 kVA and Smaller)
ANSI C57.12.26	(1993) Pad-Mounted Compartmental-Type, Self-Cooled, Three-Phase Distribution Transformers for Use with Separable Insulated High-Voltage Connectors, High-Voltage, 34 500 Grd Y/19 920 Volts and Below; 2500 kVA and Smaller
ANSI C57.12.27	(1982) Conformance Requirements for Liquid-Filled Distribution Transformers Used in Pad-Mounted Installations, Including Unit Substations
ANSI C57.12.28	(1999) Switchgear and Transformers -Padmounted Equipment - Enclosure Integrity
ANSI C80.1	(1995) Rigid Steel Conduit - Zinc Coated
ANSI O5.1	(1992) Specifications and Dimensions for Wood Poles

AMERICAN SOCIETY FOR TESTING AND MATERIALS (ASTM)

ASTM A 123/A 123M	(2001) Zinc (Hot-Dip Galvanized) Coatings on Iron and Steel Products
ASTM A 153/A 153M	(2001) Zinc Coating (Hot-Dip) on Iron and Steel Hardware
ASTM A 48	(1994ae1) Gray Iron Castings
ASTM A 48M	(1994e1) Gray Iron Castings (Metric)
ASTM B 117	(1997) Operating Salt Spray (Fog) Apparatus
ASTM B 231/B 231M	(1999) Concentric-Lay-Stranded Aluminum 1350 Conductors
ASTM B 3	(1995) Soft or Annealed Copper Wire
ASTM B 400	(1994) Compact Round Concentric-Lay-Stranded Aluminum 1350 Conductor
ASTM B 496	(1999) Compact Round Concentric-Lay-Stranded Copper Conductors
ASTM B 609/B 609M	(1999) Aluminum 1350 Round Wire, Annealed and Intermediate Tempers, for Electrical

	purposes
ASTM B 8	(1999) Concentric-Lay-Stranded Copper Conductors, Hard, Medium-Hard, or Soft
ASTM B 800	(2000) 8000 Series Aluminum Alloy Wire for Electrical Purposes-Annealed and Intermediate Tempers
ASTM B 801	(1999) Concentric-Lay-Stranded Conductors of 8000 Series Aluminum Alloy for Subsequent Covering or Insulation
ASTM C 478	(1997) Precast Reinforced Concrete Manhole Sections
ASTM C 478M	(1997) Precast Reinforced Concrete Manhole Sections (Metric)
ASTM D 1654	(1992) Evaluation of Painted or Coated Specimens Subjected to Corrosive Environments
ASTM D 2472	(2000) Sulfur Hexafluoride
ASTM D 4059	(1996) Analysis of Polychlorinated Biphenyls in Insulating Liquids by Gas Chromatography
ASTM D 923	(1997) Sampling Electrical Insulating Liquids

ASSOCIATION OF EDISON ILLUMINATING COMPANIES (AEIC)

AEIC CS5	(1994; CS5a-1995) Cross-Linked Polyethylene Insulated Shielded Power Cables Rated 5 Through 46 kV
AEIC CS6	(1996) Ethylene Propylene Rubber Insulated Shielded Power Cables Rated 5 Through 69 kV

FACTORY MUTUAL ENGINEERING AND RESEARCH (FM)

FM P7825a	(1998) Approval Guide Fire Protection

INSTITUTE OF ELECTRICAL AND ELECTRONICS ENGINEERS (IEEE)

IEEE C2	(1997) National Electrical Safety Code
IEEE C37.1	(1994) IEEE Standard Definition, Specification, and Analysis of Systems Used for Supervisory Control, Data Acquisition, and Automatic Control
IEEE C37.13	(1990; R 1995) Low-Voltage AC Power Circuit Breakers Used in Enclosures

IEEE C37.2	(1996) Electrical Power System Device Function Numbers and Contact Designations
IEEE C37.20.1	(1993) Metal-Enclosed Low-Voltage Power Circuit-Breaker Switchgear
IEEE C37.20.2	(1993; C37.20.2b) Metal-Clad and Station-Type Cubicle Switchgear
IEEE C37.20.3	(1997) Metal-Enclosed Interrupter Switchgear
IEEE C37.23	(1987; R 1991) Guide for Metal-Enclosed Bus and Calculating Losses in Isolated-Phase Bus
IEEE C37.30	(1997) Requirements for High-Voltage Switches
IEEE C37.34	(1994) Test Code for High-Voltage Air Switches
IEEE C37.41	(1994; C37.41c) Design Tests for High-Voltage Fuses, Distribution Enclosed Single-Pole Air Switches, Fuse Disconnecting Switches, and Accessories
IEEE C37.63	(1997) Requirements for Overhead, Pad-Mounted, Dry-Vault, and Submersible Automatic Line Sectionalizer for AC Systems
IEEE C37.90	(1989; R 1994) Relays and Relay Systems Associated with Electric Power Apparatus
IEEE C37.90.1	(1989; R 1994) IEEE Standard Surge Withstand Capability (SWC) Tests for Protective Relays and Relay Systems
IEEE C37.98	(1987; R 1991) Seismic Testing of Relays
IEEE C57.12.00	(1993) Standard General Requirements for Liquid-Immersed Distribution, Power, and Regulating Transformers
IEEE C57.13	(1993) Instrument Transformers
IEEE C57.98	(1993) Guide for Transformer Impulse Tests \$avail only as part of Distribution, Power, and Regulating Transformers Stds Collection
IEEE C62.1	(1989; R 1994) Surge Arresters for AC Power Circuits
IEEE C62.11	(1999) IEEE Standard Metal-Oxide Surge Arresters for AC Power Circuits

IEEE C62.2	(1987; R 1994) Guide for the Application of Gapped Silicon-Carbide Surge Arresters for Alternating Current Systems
IEEE Std 100	(1997) IEEE Standard Dictionary of Electrical and Electronics Terms
IEEE Std 242	(1986; R 1991) Recommended Practice for Protection and Coordination of Industrial and Commercial Power Systems
IEEE Std 386	(1995) Separable Insulated Connector Systems for Power Distribution Systems Above 600V
IEEE Std 399	(1997) Recommended Practice for Industrial and Commercial Power Systems Analysis
IEEE Std 404	(1993) Cable Joints for Use with Extruded Dielectric Cable Rated 5000 V Through 138 000 V and Cable Joints for Use with Laminated Dielectric Cable Rated 2500 V Through 500 000 V
IEEE Std 48	(1998) Standard Test Procedures and Requirements for Alternating-Current Cable Terminations 2.5 kV through 765 kV
IEEE Std 592	(1990; R 1996) Exposed Semiconducting Shields on Premolded High Voltage Cable Joints and Separable Insulated Connectors
IEEE Std 81	(1983) Guide for Measuring Earth Resistivity, Ground Impedance, and Earth Surface Potentials of a Ground System (Part 1) \$31.00$\F

NATIONAL ELECTRICAL MANUFACTURERS ASSOCIATION (NEMA)

NEMA AB 1	(1993) Molded Case Circuit Breakers and Molded Case Switches
NEMA BU 1	(1994) Busways
NEMA FB 1	(1993) Fittings, Cast Metal Boxes, and Conduit Bodies for Conduit and Cable Assemblies
NEMA FU 1	(1986) Low Voltage Cartridge Fuses
NEMA LA 1	(1992) Surge Arresters
NEMA PB 1	(1995) Panelboards
NEMA PB 2	(1995) Deadfront Distribution Switchboards
NEMA SG 2	(1993) High Voltage Fuses

NEMA SG 3	(1995) Power Switching Equipment
NEMA SG 5	(1995) Power Switchgear Assemblies
NEMA TC 5	(1990) Corrugated Polyolefin Coilable Plastic Utilities Duct
NEMA TC 6	(1990) PVC and ABS Plastic Utilities Duct for Underground Installation
NEMA TC 7	(1990) Smooth-Wall Coilable Polyethylene Electrical Plastic Duct
NEMA WC 7	(1988; Rev 3 1996) Cross-Linked-Thermosetting-Polyethylene-Insulated Wire and Cable for the Transmission and Distribution of Electrical Energy
NEMA WC 8	(1988; Rev 3 1996) Ethylene-Propylene-Rubber-Insulated Wire and Cable for the Transmission and Distribution of Electrical Energy

NATIONAL FIRE PROTECTION ASSOCIATION (NFPA)

NFPA 70	(2002) National Electrical Code

UNDERWRITERS LABORATORIES (UL)

UL 1072	(1995; Rev Mar 1998) Medium Voltage Power Cables
UL 1242	(1996; Rev Mar 1998) Intermediate Metal Conduit
UL 1684	(2000) Reinforced Thermosetting Resin Conduit (RTRC) and Fittings
UL 198C	(1986; Rev thru Feb 1998) High-Interrupting-Capacity Fuses, Current-Limiting Types
UL 198D	(1995) Class K Fuses
UL 198E	(1988; Rev Jul 1988) Class R Fuses
UL 198H	(1988; Rev thru Nov 1993) Class T Fuses
UL 467	(1993; Rev thru Apr 1999) Grounding and Bonding Equipment
UL 486A	(1997; Rev thru Dec 1998) Wire Connectors and Soldering Lugs for Use with Copper Conductors
UL 486B	(1997; Rev Jun 1997) Wire Connectors for Use with Aluminum Conductors

UL 489	(1996; Rev thru Dec 1998) Molded-Case Circuit Breakers, Molded-Case Switches, and Circuit-Breaker Enclosures
UL 510	(1994; Rev thru Apr 1998) Polyvinyl Chloride, Polyethylene, and Rubber Insulating Tape
UL 514A	(1996; Rev Dec 1999) Metallic Outlet Boxes
UL 6	(1997) Rigid Metal Conduit
UL 651	(1995; Rev thru Oct 1998) Schedule 40 and 80 Rigid PVC Conduit
UL 854	(1996; Rev Oct 1999) Service-Entrance Cables
UL 857	(1994; Rev thru Dec 1999) Busways and Associated Fittings

1.2 GENERAL REQUIREMENTS

1.2.1 Terminology

Terminology used in this specification is as defined in IEEE Std 100.

1.2.2 Service Conditions

Items provided under this section shall be specifically suitable for the following service conditions.

a. Altitude 3000 feet

b. Ambient Temperature 80 degrees F

c Frequency 60

1.3 SUBMITTALS

Government approval is required for submittals with a "G" designation; submittals not having a "G" designation are for information only. When used, a designation following the "G" designation identifies the office that will review the submittal for the Government. The following shall be submitted in accordance with Section 01330 SUBMITTAL PROCEDURES:

SD-02 Shop Drawings

Electrical Distribution System; G, AO

Detail drawings consisting of equipment drawings, illustrations, schedules, instructions, diagrams manufacturers standard installation drawings and other information necessary to define the installation and enable the Government to check conformity with the requirements of the contract drawings.

If departures from the contract drawings are deemed necessary by the Contractor, complete details of such departures shall be included with the detail drawings. Approved departures shall be made at no additional cost to the Government.

Detail drawings shall show how components are assembled, function together and how they will be installed on the project. Data and drawings for component parts of an item or system shall be coordinated and submitted as a unit. Data and drawings shall be coordinated and included in a single submission. Multiple submissions for the same equipment or system are not acceptable except where prior approval has been obtained from the Contracting Officer. In such cases, a list of data to be submitted later shall be included with the first submission. Detail drawings shall consist of the following:

a. Detail drawings showing physical arrangement, construction details, connections, finishes, materials used in fabrication, provisions for conduit or busway entrance, access requirements for installation and maintenance, physical size, electrical characteristics, foundation and support details, and equipment weight. Drawings shall be drawn to scale and/or dimensioned. All optional items shall be clearly identified as included or excluded.

b. Internal wiring diagrams of equipment showing wiring as actually provided for this project. External wiring connections shall be clearly identified.

Detail drawings shall as a minimum depict the installation of the following items:

a. Manholes and handholes

As-Built Drawings; G AO

The as-built drawings shall be a record of the construction as installed. The drawings shall include the information shown on the contract drawings as well as deviations, modifications, and changes from the contract drawings, however minor. The as-built drawings shall be a full sized set of prints marked to reflect deviations, modifications, and changes. The as-built drawings shall be complete and show the location, size, dimensions, part identification, and other information. Additional sheets may be added. The as-built drawings shall be jointly inspected for accuracy and completeness by the Contractor's quality control representative and by the Contracting Officer prior to the submission of each monthly pay estimate. Upon completion of the work, the Contractor shall provide three full sized sets of the marked prints to the Contracting Officer for approval. If upon review, the as-built drawings are found to contain errors and/or omissions, they will be returned to the Contractor for correction. The Contractor shall correct and return the as-built drawings to the Contracting Officer for approval within 10 calendar days from the time the drawings are returned to the Contractor.

SD-03 Product Data

Nameplates; G

Catalog cuts, brochures, circulars, specifications, product data, and printed information in sufficient detail and scope to verify compliance with the requirements of the contract documents.

Material and Equipment; G, AO

A complete itemized listing of equipment and materials proposed for incorporation into the work. Each entry shall include an item number, the quantity of items proposed, and the name of the manufacturer of each such item.

General Installation Requirements; G, AO

Procedures shall include cable pulling plans, diagrams, instructions, and precautions required to install, adjust, calibrate, and test the devices and equipment.

SD-06 Test Reports

Field Testing; G, AO

A proposed field test plan, 20 days prior to testing the installed system. No field test shall be performed until the test plan is approved. The test plan shall consist of complete field test procedures including tests to be performed, test equipment required, and tolerance limits.

Six copies of the information described below in 215.9 by 279.4 mm (8-1/2 by 11 inch) 8-1/2 by 11 inch binders having a minimum of three rings, including a separate section for each test. Sections shall be separated by heavy plastic dividers with tabs.

a. A list of equipment used, with calibration certifications.

b. A copy of measurements taken.

c. The dates of testing.

d. The equipment and values to be verified.

e. The condition specified for the test.

f. The test results, signed and dated.

g. A description of adjustments made.

Cable Installation; G, AO

Six copies of the information described below in 215.9 by 279.4 mm (8-1/2 by 11 inch) 8-1/2 by 11 inch binders having a minimum of three rings from which material may readily be removed and

replaced, including a separate section for each cable pull. Sections shall be separated by heavy plastic dividers with tabs, with all data sheets signed and dated by the person supervising the pull.

a. Site layout drawing with cable pulls numerically identified.

b. A list of equipment used, with calibration certifications. The manufacturer and quantity of lubricant used on pull.

c. The cable manufacturer and type of cable.

d. The dates of cable pulls, time of day, and ambient temperature.

e. The length of cable pull and calculated cable pulling tensions.

f. The actual cable pulling tensions encountered during pull.

SD-07 Certificates

Material and Equipment; G, AO

Where materials or equipment are specified to conform to the standards of the Underwriters Laboratories (UL) or to be constructed or tested, or both, in accordance with the standards of the American National Standards Institute (ANSI), the Institute of Electrical and Electronics Engineers (IEEE), or the National Electrical Manufacturers Association (NEMA), the Contractor shall submit proof that the items provided conform to such requirements. The label of, or listing by, UL will be acceptable as evidence that the items conform. Either a certification or a published catalog specification data statement, to the effect that the item is in accordance with the referenced ANSI or IEEE standard, will be acceptable as evidence that the item conforms. A similar certification or published catalog specification data statement to the effect that the item is in accordance with the referenced NEMA standard, by a company listed as a member company of NEMA, will be acceptable as evidence that the item conforms. In lieu of such certification or published data, the Contractor may submit a certificate from a recognized testing agency equipped and competent to perform such services, stating that the items have been tested and that they conform to the requirements listed, including methods of testing of the specified agencies. Compliance with above-named requirements does not relieve the Contractor from compliance with any other requirements of the specifications.

1.4 DELIVERY, STORAGE, AND HANDLING

Devices and equipment shall be visually inspected by the Contractor when received and prior to acceptance from conveyance. Metal poles shall be handled and stored in accordance with the manufacturer's instructions.

PART 2 PRODUCTS

2.1 STANDARD PRODUCT

Material and equipment shall be the standard product of a manufacturer regularly engaged in the manufacture of the product and shall essentially duplicate items that have been in satisfactory use for at least 2 years prior to bid opening. Items of the same classification shall be identical including equipment, assemblies, parts, and components.

2.2 NAMEPLATES

2.2.1 General

Each major component of this specification shall have the manufacturer's name, address, type or style, model or serial number, and catalog number on a nameplate securely attached to the equipment. Nameplates shall be made of noncorrosive metal.

2.3 CORROSION PROTECTION

2.3.1 Aluminum Materials

Aluminum shall not be used in contact with earth or concrete. Where aluminum conductors are connected to dissimilar metal, fittings conforming to UL 486B shall be used.

2.3.2 Ferrous Metal Materials

2.3.2.1 Hardware

Ferrous metal hardware shall be hot-dip galvanized in accordance with ASTM A 153/A 153M and ASTM A 123/A 123M.

2.3.2.2 Equipment

Equipment and component items, including but not limited to ferrous metal luminaries not hot-dip galvanized or porcelain enamel finished, shall be provided with corrosion-resistant finishes which shall withstand 120 hours of exposure to the salt spray test specified in ASTM B 117 without loss of paint or release of adhesion of the paint primer coat to the metal surface in excess of 1.6 mm (1/16 inch) 1/16 inch from the test mark. The scribed test mark and test evaluation shall be in accordance with ASTM D 1654 with a rating of not less than 7 in accordance with TABLE 1, (procedure A). Cut edges or otherwise damaged surfaces of hot-dip galvanized sheet steel or mill galvanized sheet steel shall be coated with a zinc rich paint conforming to the manufacturer's standard.

2.3.3 Finishing

Painting and finishing shall be as specificed herein and under the relative section.

2.4 CABLES

Cables shall be single conductor type unless otherwise indicated.

2.4.2 Low-Voltage Cables

Cables shall be rated 600 volts and shall conform to the requirements of NFPA 70, and must be UL listed for the application or meet the applicable section of either ICEA or NEMA standards.

2.4.2.1 Conductor Material

Underground cables shall be annealed copper complying with ASTM B 3 and ASTM B 8. Intermixing of copper and aluminum conductors is not permitted.

2.4.2.2 Insulation

Insulation must be in accordance with NFPA 70, and must be UL listed for the application or meet the applicable sections of either ICEA, or NEMA standards.

2.4.2.3 Jackets

Multiconductor cables shall have an overall PVC outer jacket.

2.4.2.5 In Duct

Cables shall be single-conductor cable, in accordance with NFPA 70.

2.5 CABLE JOINTS, TERMINATIONS, AND CONNECTORS

2.5.3 Low-Voltage Cable Splices

Low-voltage cable splices and terminations shall be rated at not less than 600 Volts. Splices in conductors No. 10 AWG and smaller shall be made with an insulated, solderless, pressure type connector, conforming to the applicable requirements of UL 486A. Splices in conductors No. 8 AWG and larger shall be made with noninsulated, solderless, pressure type connector, conforming to the applicable requirements of UL 486A and UL 486B. Splices shall then be covered with an insulation and jacket material equivalent to the conductor insulation and jacket. Splices below grade or in wet locations shall be sealed type conforming to ANSI C119.1 or shall be waterproofed by a sealant-filled, thick wall, heat shrinkable, thermosetting tubing or by pouring a thermosetting resin into a mold that surrounds the joined conductors. Service entrance conductors shall not be spliced.

2.6 CONDUIT AND DUCTS

Duct lines shall be concrete-encased, thin-wall type.

2.6.1 Metallic Conduit

Intermediate metal conduit shall comply with UL 1242. Rigid galvanized steel conduit shall comply with UL 6 and ANSI C80.1. Metallic conduit fittings and outlets shall comply with UL 514A and NEMA FB 1.

2.6.2 Nonmetallic Ducts

2.6.2.2 Concrete Encased Ducts

UL 651 Schedule 40 or NEMA TC 6 Type EB.

2.6.2.3 Direct Burial (Underground Site Lighting Only)

UL 651 Schedule 40, or NEMA TC 6 Type DB.

2.6.3 Conduit Sealing Compound

Compounds for sealing ducts and conduit shall have a putty-like consistency workable with the hands at temperatures as low as 2 degrees C (35 degrees F), 35 degrees F, shall neither slump at a temperature of 150 degrees C (300 degrees F), 300 degrees F, nor harden materially when exposed to the air. Compounds shall adhere to clean surfaces of fiber or plastic ducts; metallic conduits or conduit coatings; concrete, masonry, or lead; any cable sheaths, jackets, covers, or insulation materials; and the common metals. Compounds shall form a seal without dissolving, noticeably changing characteristics, or removing any of the ingredients. Compounds shall have no injurious effect upon the hands of workmen or upon materials.

2.7 MANHOLES, HANDHOLES, AND PULLBOXES

Manholes, handholes, and pullboxes shall be as indicated. Strength of manholes, handholes, and pullboxes and their frames and covers shall conform to the requirements of IEEE C2. Precast-concrete manholes shall have the required strength established by ASTM C 478, ASTM C 478M. Frames and covers shall be made of gray cast iron and a machine-finished seat shall be provided to ensure a matching joint between frame and cover. Cast iron shall comply with ASTM A 48M ASTM A 48, Class 30B, minimum. Handholes for low voltage cables installed in parking lots, sidewalks, and turfed areas shall be fabricated from an aggregate consisting of sand and with continuous woven glass strands having an overall compressive strength of at least [69 MPa (10,000 psi)][_____] MPa ([_____] psi) 10,000 psi and a flexural strength of at least [34.5 MPa (5000 psi)][_____] MPa ([_____] psi).5,000 psi. Pullbox and handhole covers in sidewalks, and turfed areas shall be of the same material as the box. Concrete pullboxes shall consist of precast reinforced concrete boxes, extensions, bases, and covers.

2.12 GROUNDING AND BONDING

2.12.1 Driven Ground Rods

Ground rods shall be copper-clad steel conforming to UL 467 or solid stainless steel not less than 3/4 inch in diameter by 3.1 m (10 feet) 10 feet in length. Sectional type rods may be used.

2.12.2 Grounding Conductors

Grounding conductors shall be bare, except where installed in conduit with associated phase conductors. Insulated conductors shall be of the same material as phase conductors and green color-coded, except that conductors shall be rated no more than 600 volts. Bare conductors shall be ASTM B 8 soft-drawn unless otherwise indicated. Aluminum is not acceptable.

2.13 CONCRETE AND REINFORCEMENT

Concrete work shall have minimum 20 MPa 3000 psi compressive strength and conform to the requirements of Section 03300 CAST-IN-PLACE STRUCTURAL CONCRETE. Concrete reinforcing shall be as specified in Section 03200A CONCRETE REINFORCEMENT.

PART 3 EXECUTION

3.1 GENERAL INSTALLATION REQUIREMENTS

Equipment and devices shall be installed and energized in accordance with the manufacturer's published instructions. Except as covered herein, excavation, trenching, and backfilling shall conform to the requirements of Section 02316A EXCAVATION, TRENCHING, AND BACKFILLING FOR UTILITIES SYSTEMS. Concrete work shall have minimum 20 MPa 3000 psi compressive strength and conform to the requirements of Section 03300 CAST-IN-PLACE STRUCTURAL CONCRETE.

3.1.1 Conformance to Codes

The installation shall comply with the requirements and recommendations of NFPA 70 and IEEE C2 as applicable.

3.1.2 Verification of Dimensions

The Contractor shall become familiar with details of the work, shall verify dimensions in the field, and shall advise the Contracting Officer of any discrepancy before performing any work.

3.2 CABLE INSTALLATION

The Contractor shall obtain from the manufacturer an installation manual or set of instructions which addresses such aspects as cable construction, insulation type, cable diameter, bending radius, cable temperature, lubricants, coefficient of friction, conduit cleaning, storage procedures, moisture seals, testing for and purging moisture, etc. The Contractor shall then perform pulling calculations and prepare a pulling plan which shall be submitted along with the manufacturers instructions in accordance with SUBMITTALS.

3.2.1 Cable Installation Plan and Procedure

Cable shall be installed strictly in accordance with the cable manufacturer's recommendations. Each circuit shall be identified by means of a fiber, laminated plastic, or non-ferrous metal tags, or approved equal, in each manhole, handhole, junction box, and each terminal. Each tag shall contain the following information; cable type, conductor size, circuit number, circuit voltage, cable destination and phase identification.

3.2.1.1 Cable Inspection

The cable reel shall be inspected for correct storage positions, signs of physical damage, and broken end seals. If end seal is broken, moisture shall be removed from cable in accordance with the cable manufacturer's recommendations.

3.2.1.2 Duct Cleaning

Duct shall be cleaned with an assembly that consists of a flexible mandrel (manufacturers standard product in lengths recommended for the specific size and type of duct) that is 6.4 mm (1/4 inch) 1/4 inch less than inside diameter of duct, 2 wire brushes, and a rag. The cleaning assembly shall be pulled through conduit a minimum of 2 times or until less than a volume

of 131 cubic centimeters (8 cubic inches) 8 cubic inches of debris is expelled from the duct.

3.2.1.3 Duct Lubrication

The cable lubricant shall be compatible with the cable jacket for cable that is being installed. Application of lubricant shall be in accordance with lubricant manufacturer's recommendations.

3.2.1.4 Cable Installation

The Contractor shall provide a cable feeding truck and a cable pulling winch as required. The Contractor shall provide a pulling grip or pulling eye in accordance with cable manufacturer's recommendations. The pulling grip or pulling eye apparatus shall be attached to polypropylene or manilla rope followed by lubricant front end packs and then by power cables. A dynamometer shall be used to monitor pulling tension. Pulling tension shall not exceed cable manufacturer's recommendations. The Contractor shall not allow cables to cross over while cables are being fed into duct. For cable installation in cold weather, cables shall be kept at 10 degrees C (50 degrees F) 50 degrees F temperature for at least 24 hours before installation.

3.2.1.5 Cable Installation Plan

The Contractor shall submit a cable installation plan for all cable pulls in accordance with the detail drawings portion of paragraph SUBMITTALS. Cable installation plan shall include:

a. Site layout drawing with cable pulls identified in numeric order of expected pulling sequence and direction of cable pull.

b. List of cable installation equipment.

c. Lubricant manufacturer's application instructions.

d. Procedure for resealing cable ends to prevent moisture from entering cable.

e. Cable pulling tension calculations of all cable pulls.

f. Cable percentage conduit fill.

g. Cable sidewall thrust pressure.

h. Cable minimum bend radius and minimum diameter of pulling wheels used.

i. Cable jam ratio.

j. Maximum allowable pulling tension on each different type and size of conductor.

k. Maximum allowable pulling tension on pulling device.

3.2.2 Duct Line

Cables shall be installed in duct lines where indicated. Neutral and grounding conductors shall be installed in the same duct with their associated phase conductors.

3.2.4 Insect and Rodent Damage

3.2.5 Electric Manholes

Cables shall be routed around the interior walls and securely supported from walls on cables racks. Cable routing shall minimize cable crossover, provide access space for maintenance and installation of additional cables, and maintain cable separation in accordance with IEEE C2.

3.5 DUCT LINES

3.5.1 Requirements

Numbers and sizes of ducts shall be as indicated. Duct lines shall be laid with a minimum slope of 100 mm per 30 m. 4 inches per 100 feet. Depending on the contour of the finished grade, the high-point may be at a terminal, a manhole, a handhole, or between manholes or handholes. Short-radius manufactured 90-degree duct bends may be used only for pole or equipment risers, unless specifically indicated as acceptable. The minimum manufactured bend radius shall be 450 mm (18 inches) 18 inches for ducts of less than 80 mm (3 inch) 3 inch diameter, and 900 mm (36 inches) 36 inches for ducts 80 mm (3 inches) 3 inches or greater in diameter. Otherwise, long sweep bends having a minimum radius of 7.6 m 25 feet shall be used for a change of direction of more than 5 degrees, either horizontally or vertically. Both curved and straight sections may be used to form long sweep bends, but the maximum curve used shall be 30 degrees and manufactured bends shall be used. Ducts shall be provided with end bells whenever duct lines terminate in manholes or handholes.

3.5.2 Treatment

Ducts shall be kept clean of concrete, dirt, or foreign substances during construction. Field cuts requiring tapers shall be made with proper tools and match factory tapers. A coupling recommended by the duct manufacturer shall be used whenever an existing duct is connected to a duct of different material or shape. Ducts shall be stored to avoid warping and deterioration with ends sufficiently plugged to prevent entry of any water or solid substances. Ducts shall be thoroughly cleaned before being laid. Plastic ducts shall be stored on a flat surface and protected from the direct rays of the sun.

3.5.3 Concrete Encasement

Ducts requiring concrete encasements shall comply with NFPA 70, except that electrical duct bank configurations for ducts 150 mm (6 inches) 6 inches in diameter shall be determined by calculation and as shown on the drawings. The separation between adjacent electric power and communication ducts shall conform to IEEE C2. Duct line encasements shall be monolithic construction. Where a connection is made to a previously poured encasement, the new encasement shall be well bonded or doweled to the existing encasement. The Contractor shall submit proposed bonding method for approval in accordance with the detail drawing portion of paragraph SUBMITTALS. At any point, except railroad and airfield crossings, tops of concrete encasements shall be not less than the cover requirements listed

in NFPA 70. At railroad and airfield crossings, duct lines shall be encased with concrete and reinforced as indicated to withstand specified surface loadings. Tops of concrete encasements shall be not less than 1.5 m 5 feet below tops of rails or airfield paving unless otherwise indicated. Where ducts are jacked under existing pavement, rigid steel conduit will be installed because of its strength. To protect the corrosion-resistant conduit coating, predrilling or installing conduit inside a larger iron pipe sleeve (jack-and-sleeve) is required. For crossings of existing railroads and airfield pavements greater than 15 m 50 feet in length, the predrilling method or the jack-and-sleeve method will be used. Separators or spacing blocks shall be made of steel, concrete, plastic, or a combination of these materials placed not farther apart than 1.2 m 4 feet on centers. Ducts shall be securely anchored to prevent movement during the placement of concrete and joints shall be staggered at least 150 mm 6 inches vertically.

3.5.4 Nonencased Direct-Burial Ducts (Site Lighting Only)

Top of duct lines shall be below the frost line depth of [_____] mm, 18 inches, but not less than [_____] mm 36 inches below finished grade and shall be installed with a minimum of 75 mm 3 inches of earth around each duct, except that between adjacent electric power and communication ducts, 300 mm 12 inches of earth is required. Bottoms of trenches shall be graded toward manholes or handholes and shall be smooth and free of stones, soft spots, and sharp objects. Where bottoms of trenches comprise materials other than sand, a 75 mm 3 inch layer of sand shall be laid first and compacted to approximate densities of surrounding firm soil before installing ducts. Joints in adjacent tiers of duct shall be vertically staggered at least1 50 mm. 6 inches. The first 150 mm 6 inch layer of backfill cover shall be sand compacted as previously specified. The rest of the excavation shall be backfilled and compacted in 75 to 150 mm3 to 6 inch layers. Duct banks may be held in alignment with earth. However, high-tiered banks shall use a wooden frame or equivalent form to hold ducts in alignment prior to backfilling.

3.5.5 Installation of Couplings

Joints in each type of duct shall be made up in accordance with the manufacturer's recommendations for the particular type of duct and coupling selected and as approved.

3.5.5.2 Plastic Duct

Duct joints shall be made by brushing a plastic solvent cement on insides of plastic coupling fittings and on outsides of duct ends. Each duct and fitting shall then be slipped together with a quick 1/4-turn twist to set the joint tightly.

3.5.6 Duct Line Markers

Duct line markers shall be provided at the ends of long duct line stubouts or for other ducts whose locations are indeterminate because of duct curvature or terminations at completely below-grade structures. In addition to markers, a 0.127 mm (5 mil) 5 mil brightly colored plastic tape, not less than 75 mm (3 inches) 3 inches in width and suitably inscribed at not more than 3 m (10 feet) 10 feet on centers with a continuous metallic backing and a corrosion-resistant 0.0254 mm (1 mil) 1 mil metallic foil core to permit easy location of the duct line, shall be

placed approximately 300 mm 12 inches below finished grade levels of such lines.

3.6 MANHOLES, HANDHOLES, AND PULLBOXES

3.6.1 General

Manholes shall be constructed approximately where shown. The exact location of each manhole shall be determined after careful consideration has been given to the location of other utilities, grading, and paving. The location of each manhole shall be approved by the Contracting Officer before construction of the manhole is started. Manholes shall be the type noted on the drawings and shall be constructed in accordance with the applicable details as indicated. Top, walls, and bottom shall consist of reinforced concrete. Walls and bottom shall be of monolithic concrete construction. The Contractor may at his option utilize monolithically constructed precast-concrete manholes having the required strength and inside dimensions as required by the drawings or specifications. In paved areas, frames and covers for manhole and handhole entrances in vehicular traffic areas shall be flush with the finished surface of the paving. In unpaved areas, the top of manhole covers shall be approximately 15 mm 1/2 inch above the finished grade. Where existing grades that are higher than finished grades are encountered, concrete assemblies designed for the purpose shall be installed to elevate temporarily the manhole cover to existing grade level. All duct lines entering manholes must be installed on compact soil or otherwise supported when entering a manhole to prevent shear stress on the duct at the point of entrance to the manhole. Duct lines entering cast-in-place concrete manholes shall be cast in-place with the manhole. Duct lines entering precast concrete manholes through a precast knockout penetration shall be grouted tight with a portland cement mortar. PVC duct lines entering precast manholes through a PVC endbell shall be solvent welded to the endbell. A cast metal grille-type sump frame and cover shall be installed over the manhole sump. A cable-pulling iron shall be installed in the wall opposite each duct line entrance.

3.6.2 Electric Manholes

Cables shall be securely supported from walls by hot-dip galvanized cable racks with a plastic coating over the galvanizing and equipped with adjustable hooks and insulators. The number of cable racks indicated shall be installed in each manhole and not less than 2 spare hooks shall be installed on each cable rack. Insulators shall be made of high-glazed porcelain. Insulators will not be required on spare hooks.

3.6.3 Communications Manholes

The number of hot-dip galvanized cable racks with a plastic coating over the galvanizing indicated shall be installed in each telephone manhole. Each cable rack shall be provided with 2 cable hooks. Cables for the telephone and communication systems will be installed by others.

3.6.4 Handholes

Handholes shall be located approximately as shown. Handholes shall be of the type noted on the drawings and shall be constructed in accordance with the details shown.

3.6.5 Pullboxes

Pullbox tops shall be flush with sidewalks or curbs or placed 15 mm 1/2 inch above surrounding grades when remote from curbed roadways or sidewalks. Covers shall be marked "Low-Voltage" and provided with 2 lifting eyes and 2 hold-down bolts. Each box shall have a suitable opening for a ground rod. Conduit, cable, ground rod entrances, and unused openings shall be sealed with mortar.

3.6.6 Ground Rods

A ground rod shall be installed at the manholes, handholes and pullboxes. Ground rods shall be driven into the earth before the manhole floor is poured so that approximately 100 mm 4 inches of the ground rod will extend above the manhole floor. When precast concrete manholes are used, the top of the ground rod may be below the manhole floor and a No. 1/0 AWG ground conductor brought into the manhole through a watertight sleeve in the manhole wall.

3.7 PAD-MOUNTED EQUIPMENT INSTALLATION

Pad-mounted equipment, shall be installed on concrete pads in accordance with the manufacturer's published, standard installation drawings and procedures, and in accordance with the local power companies requirements.

3.7.1 Concrete Pads

3.7.1.1 Construction

Concrete pads for pad-mounted electrical equipment may be either pre-fabricated orshall be poured-in-place. Pads shall be constructed as indicated, except that exact pad dimensions and mounting details are equipment specific and are the responsibility of the Contractor. Tops of concrete pads shall be level and shall project 100 mm 4 inches above finished paving or grade and sloped to drain. Edges of concrete pads shall have 20 mm 3/4 inch chamfer. Conduits for primary, secondary, and grounding conductors shall be set in place prior to placement of concrete pads. Where grounding electrode conductors are installed through concrete pads, PVC conduit sleeves shall be installed through the concrete to provide physical protection. To facilitate cable installation and termination, the concrete pad shall be provided with a rectangular hole below the primary and secondary compartments, sized in accordance with the manufacturer's recommended dimensions. Upon completion of equipment installation the rectangular hole shall be filled with masonry grout.

3.7.1.2 Concrete and Reinforcement

Concrete work shall have minimum 20 MPa 3000 psi compressive strength and comform to the requirements of Section 03300 CAST-IN-PLACE STRUCTURAL CONCRETE. Concrete pad reinforcement shall be in accordance with Section 03200A CONCRETE REINFORCEMENT.

3.7.1.3 Sealing

When the installation is complete, the Contractor shall seal all conduit and other entries into the equipment enclosure with an approved sealing compound. Seals shall be of sufficient strength and durability to protect all energized live parts of the equipment from rodents, insects, or other foreign matter.

3.9 CONNECTIONS TO BUILDINGS

Cables shall be extended into the various buildings as indicated, and shall be connected to the first applicable termination point in each building. Interfacing with building interior conduit systems shall be at conduit stubouts terminating 1.5 m 5 feet outside of a building and [600] [_____] mm 3 feet below finished grade as specified.

3.10 GROUNDING

A ground consisting of the indicated configuration of bare copper conductors and driven ground rods shall be installed around pad-mounted equipment as shown. Equipment frames of metal-enclosed equipment, and other noncurrent-carrying metal parts, such as cable shields, cable sheaths and armor, and metallic conduit shall be grounded. At least 2 connections shall be provided from a transformer, to the ground. Metallic frames and covers of handholes and pull boxes shall be grounded by use of a braided, copper ground strap with equivalent ampacity of No. 6 AWG.

3.10.1 Grounding Electrodes

Grounding electrodes shall be installed as shown on the drawings and as follows:

a. Driven rod electrodes - Unless otherwise indicated, ground rods shall be driven into the earth until the tops of the rods are approximately 300 mm 1 foot below finished grade.

d. Additional electrodes - When the required ground resistance is not met, additional electrodes shall be provided interconnected with grounding conductors to achieve the specified ground resistance. The additional electrodes will be up to three,[2.4] [3] m ([8] [10] feet)10 feet rods spaced a minimum of [3] [3.7] m 10 feet apart . In high ground resistance, UL listed chemically charged ground rods may be used. If the resultant resistance exceeds 25 ohms measured not less than 48 hours after rainfall, the Contracting Officer shall be notified immediately.

3.10.2 Grounding and Bonding Connections

Connections above grade shall be made by the fusion-welding process or with bolted solderless connectors, in compliance with UL 467, and those below grade shall be made by a fusion-welding process. Where grounding conductors are connected to aluminum-composition conductors, specially treated or lined copper-to-aluminum connectors suitable for this purpose shall be used.

3.10.3 Grounding and Bonding Conductors

Grounding and bonding conductors include conductors used to bond transformer enclosures and equipment frames to the grounding electrode system. Grounding and bonding conductors shall be sized as shown, and located to provide maximum physical protection. Bends greater than 45 degrees in ground conductors are not permitted. Routing of ground conductors through concrete shall be avoided. When concrete penetration is necessary, nonmetallic conduit shall be cast flush with the points of concrete entrance and exit so as to provide an opening for the ground

conductor, and the opening shall be sealed with a suitable compound after installation.

3.10.5 Manhole, Handhole, or Concrete Pullbox Grounding

Ground rods installed in manholes, handholes, or concrete pullboxes shall be connected to cable racks, cable-pulling irons, and other non current carrying metals. Grounding electrode conductors shall be neatly and firmly attached to manhole or handhole walls and the amount of exposed bare wire shall be held to a minimum.

3.11 FIELD TESTING

3.11.1 General

Field testing shall be performed in the presence of the Contracting Officer. The Contractor shall notify the Contracting Officer 15 days prior to conducting tests. The Contractor shall furnish all materials, labor, and equipment necessary to conduct field tests. The Contractor shall perform all tests and inspections recommended by the manufacturer unless specifically waived by the Contracting Officer. The Contractor shall maintain a written record of all tests which includes date, test performed, personnel involved, devices tested, serial number and name of test equipment, and test results. Field test reports shall be signed and dated by the Contractor.

3.11.2 Safety

The Contractor shall provide and use safety devices such as rubber gloves, protective barriers, and danger signs to protect and warn personnel in the test vicinity. The Contractor shall replace any devices or equipment which are damaged due to improper test procedures or handling.

3.11.3 Ground-Resistance Tests

The resistance of each grounding electrode shall be measured using the fall-of-potential method defined in IEEE Std 81. Ground resistance measurements shall be made before the electrical distribution system is energized and shall be made in normally dry conditions not less than 48 hours after the last rainfall. Resistance measurements of separate grounding electrode systems shall be made before the systems are bonded together below grade. The combined resistance of separate systems may be used to meet the required resistance, but the specified number of electrodes must still be provided.

a. Single rod electrode - 10 ohms.

3.11.6 Low-Voltage Cable Test

Low-voltage cable, complete with splices, shall be tested for insulation resistance after the cables are installed, in their final configuration, ready for connection to the equipment, and prior to energization. The test voltage shall be 500 volts dc, applied for one minute between each conductor and ground and between all possible combinations conductors in the same trench, duct, or cable, with all other conductors in the same trench, duct, or conduit. The minimum value of insulation shall be:

R in megohms = (rated voltage in kV + 1) x 304.8/(length of cable in meters)

R in megohms = (rated voltage in kV + 1) x 1000/(length of cable in feet

Each cable failing this test shall be repaired or replaced. The repaired cable shall be retested until failures have been eliminated.

3.11.13 Operating Tests

After the installation is completed, and at such times as the Contracting Officer may direct, the Contractor shall conduct operating tests for approval. The equipment shall be demonstrated to operate in accordance with the requirements herein. An operating test report shall be submitted in accordance with paragraph SUBMITTALS.

3.12 MANUFACTURER'S FIELD SERVICE

3.12.2 Installation Engineer

After delivery of the equipment, the Contractor shall furnish one or more field engineers, regularly employed by the equipment manufacturer to supervise the installation of the equipment, assist in the performance of the onsite tests, initial operation, and instruct personnel as to the operational and maintenance features of the equipment.

3.13 ACCEPTANCE

Final acceptance of the facility will not be given until the Contractor has successfully completed all tests and after all defects in installation, material or operation have been corrected.

-- End of Section --

SECTION 16528A

EXTERIOR LIGHTING
05/01

PART 1 GENERAL

1.1 REFERENCES

The publications listed below form a part of this specification to the extent referenced. The publications are referred to in the text by basic designation only.

AMERICAN ASSOCIATION OF STATE HIGHWAY AND TRANSPORTATION OFFICIALS (AASHTO)

AASHTO LTS-3	(1994) Standard Specifications for Structural Supports for Highway Signs, Luminaires and Traffic Signals

AMERICAN NATIONAL STANDARDS INSTITUTE (ANSI)

ANSI C78.1	(1991; C78.1a; R 1996) Fluorescent Lamps - Rapid-Start Types - Dimensional and Electrical Characteristics
ANSI C78.40	(1992) Specifications for Mercury Lamps
ANSI C78.1350	(1990) Electric Lamps - 400-Watt, 100-Volt, S51 Single-Ended High-Pressure Sodium Lamps
ANSI C78.1351	(1989) Electric Lamps - 250-Watt, 100-Volt S50 Single-Ended High-Pressure Sodium Lamps
ANSI C78.1352	(1990) Electric Lamps - 1000-Watt, 250-Volt, S52 Single-Ended High-Pressure Sodium Lamps
ANSI C78.1355	(1989) Electric Lamps - 150-Watt, 55-Volt S55 High-Pressure Sodium Lamps
ANSI C78.1375	(1996) 400-Watt, M59 Single-Ended Metal-Halide Lamps
ANSI C78.1376	(1996) 1000-Watt, M47 Metal-Halide Lamps
ANSI C80.1	(1995) Rigid Steel Conduit - Zinc Coated
ANSI C82.4	(1992) Ballasts for High-Intensity-Discharge and Low-Pressure Sodium Lamps (Multiple-Supply Type)
ANSI C119.1	(1986; R 1997) Sealed Insulated Underground Connector Systems Rated 600

	Volts
ANSI C135.1	(1979) Galvanized Steel Bolts and Nuts for Overhead Line Construction
ANSI C135.14	(1979) Staples with Rolled or Slash Points for Overhead Line Construction
ANSI C135.30	(1988) Zinc-Coated Ferrous Ground Rods for Overhead or Underground Line Construction
ANSI C136.2	(1996) Luminaires, Voltage Classification of Roadway Lighting Equipment
ANSI C136.3	(1995) Roadway Lighting Equipment-Luminaire Attachments
ANSI C136.6	(1997) Roadway Lighting Equipment - Metal Heads and Reflector Assemblies - Mechanical and Optical Interchangeability
ANSI C136.9	(1990) Roadway Lighting - Socket Support Assemblies for Use in Metal Heads - Mechanical Interchangeability
ANSI C136.10	(1996) Roadway Lighting- Locking-Type Photocontrol Devices and Mating Receptacles - Physical and Electrical Interchangeability and Testing
ANSI C136.11	(1995) Multiple Sockets for Roadway Lighting Equipment
ANSI C136.15	(1997) Roadway Lighting, High Intensity Discharge and Low Pressure Sodium Lamps in Luminaires -
ANSI C136.20	(1990) Roadway Lighting Equipment - Fiber Reinforced-Plastic (FRP) Fiber Lighting Poles
ANSI O5.1	(1992) Specifications and Dimensions for Wood Poles

AMERICAN SOCIETY FOR TESTING AND MATERIALS (ASTM)

ASTM A 36/A 36M	(2000) Carbon Structural Steel
ASTM A 48	(1994ael) Gray Iron Castings
ASTM A 48M	(1994el) Gray Iron Castings (Metric)
ASTM A 123/A 123M	(2000) Zinc (Hot-Dip Galvanized) Coatings on Iron and Steel Products
ASTM A 153/A 153M	(2000) Zinc Coating (Hot-Dip) on Iron and Steel Hardware

ASTM A 575	(1996) Steel Bars, Carbon, Merchant Quality, M-Grades
ASTM A 576	(1990b; R 1995el) Steel Bars, Carbon, Hot-Wrought, Special Quality
ASTM B 2	(2000) Medium-Hard-Drawn Copper Wire
ASTM B 8	(1999) Concentric-Lay-Stranded Copper Conductors, Hard, Medium-Hard, or Soft
ASTM B 117	(1997) Operating Salt Spray (Fog) Apparatus
ASTM C 478	(1997) Precast Reinforced Concrete Manhole Sections
ASTM D 1654	(1992) Evaluation of Painted or Coated Specimens Subjected to Corrosive Environments

AMERICAN WOOD-PRESERVERS' ASSOCIATION (AWPA)

AWPA C4	(1999) Poles - Preservative Treatment by Pressure Processes
AWPA C25	(1995) Sawn Crossarms - Preservative Treatment by Pressure Processes
AWPA P1/P13	(1995) Standard for Coal Tar Creosote for Land and Fresh Water and Marine (Coastal Water Use)
AWPA P8	(2000) Standards for Oil-Borne Preservatives
AWPA P9	(1998) Standards for Solvents for Organic Preservative Systems

ELECTRONIC INDUSTRIES ALLIANCE (EIA)

EIA ANSI/EIA/TIA-232-F	(1997) Interface Between Data Terminal Equipment and Data Circuit-Terminating Equipment Employing Serial Binary Data Interchange

ILLUMINATING ENGINEERING SOCIETY OF NORTH AMERICA (IESNA)

IESNA RP-8	(1983; R 1993) Roadway Lighting

INSTITUTE OF ELECTRICAL AND ELECTRONICS ENGINEERS (IEEE)

IEEE C2	(1997) National Electrical Safety Code
IEEE C62.41	(1991; R 1995) Surge Voltages in Low-Voltage AC Power Circuits
IEEE C136.13	(1987; R 1997) Metal Brackets for Wood

	Poles
IEEE Std 81	(1983) Guide for Measuring Earth Resistivity, Ground Impedance, and Earth Surface Potentials of a Ground System (Part 1)

NATIONAL ELECTRICAL MANUFACTURERS ASSOCIATION (NEMA)

NEMA 250	(1997) Enclosures for Electrical Equipment (1000 Volts Maximum)
NEMA ICS 1	(1993) Industrial Control and Systems
NEMA ICS 2	(1993) Industrial Control and Systems Controllers, Contactors, and Overload Relays Rated Not More Than 2,000 Volts AC or 750 Volts DC
NEMA ICS 6	(1993) Industrial Control and Systems, Enclosures
NEMA OS 1	(1996) Sheet-Steel Outlet Boxes, Device Boxes, Covers, and Box Supports
NEMA OS 2	(1998) Nonmetallic Outlet Boxes, Device Boxes, Covers and Box Supports
NEMA RN 1	(1998) Polyvinyl-Chloride (PVC) Externally Coated Galvanized Rigid Steel Conduit and Intermediate Metal Conduit
NEMA TC 6	(1990) PVC and ABS Plastic Utilities Duct for Underground Installation
NEMA TC 9	(1990) Fittings for ABS and PVC Plastic Utilities Duct for Underground Installation

NATIONAL FIRE PROTECTION ASSOCIATION (NFPA)

NFPA 70	(1999) National Electrical Code

UNDERWRITERS LABORATORIES (UL)

UL 6	(1997) Rigid Metal Conduit
UL 44	(1999) Thermoset-Insulated Wires and Cables
UL 98	(1994; Rev thru Jun 1998) Enclosed and Dead-Front Switches
UL 467	(1993; Rev thru Apr 1999) Grounding and Bonding Equipment
UL 486A	(1997; Rev thru Dec 1998) Wire Connectors and Soldering Lugs for Use with Copper Conductors

UL 486B	(1997; Rev Jun 1997) Wire Connections for Use with Aluminum Conductors
UL 506	(1994; Rev thru Oct 1997) Specialty Transformers
UL 514A	(1996; Rev Dec 1999) Metallic Outlet Boxes
UL 514B	(1996; Rev Oct 1998) Fittings for Conduit and Outlet Boxes
UL 514C	(1996; Rev thru Dec 1999) Nonmetallic Outlet Boxes, Flush-Device Boxes, and Covers
UL 651	(1995; Rev thru Oct 1998) Schedule 40 and 80 Rigid PVC Conduit
UL 651A	(1995; Rev thru Apr 1998) Type EB and A Rigid PVC Conduit and HDPE Conduit
UL 854	(1996; Rev Oct 1999) Service-Entrance Cables
UL 870	(1995; Rev Aug 1999) Wireways, Auxiliary Gutters, and Associated Fittings
UL 886	(1994; Rev thru Apr 1999) Outlet Boxes and Fittings for Use in Hazardous (Classified) Locations
UL 1029	(1994; Rev thru Dec 1997) High-Intensity-Discharge Lamp Ballasts
UL 1449	(1996; Rev thru Dec 1999) Transient Voltage Surge Suppressors
UL 1571	(1995; Rev thru Nov 1999) Incandescent Lighting Fixtures
UL 1572	(1995; Rev thru Nov 1999) High Intensity Discharge Lighting Fixtures

1.2 SUBMITTALS

Government approval is required for submittals with a "G" designation; submittals not having a "G" designation are for information only. When used, a designation following the "G" designation identifies the office that will review the submittal for the Government. The following shall be submitted in accordance with Section 01330 SUBMITTAL PROCEDURES:

SD-02 Shop Drawings

Lighting System; G, AO
Detail Drawings; G, AO

Detail drawings for the complete system and for poles, lighting

fixtures, bracket arms, cable boxes, handholes, and controllers . Detail drawings for precast handholes shall include a design analysis to determine that strength is equivalent to indicated cast-in-place concrete handholes.

Point by Point Lighting Calculations; G, AO

Provide point by point lighting level calculations. The calculations shall be in accordance with current IES requirements and format and including: a light loss factor of 0.8, an average to minimum ratio of 3 to 1, a minimum of 0.5 footcandle on all paved surfaces, an average footcandle light level of 3 to 5 at paved surfaces, calculations taken at 10 feet on center on all drives, and parking areas, areas behind light fixtures (at least 6 feet) indicating the footcandle level to control light spillage.

As-Built Drawings; G, AO

Final as-built drawings shall be finished drawings on mylar or vellum and shall be delivered with the final test report.

SD-03 Product Data

Equipment and Materials; G, AO

Data published by the manufacturer of each item on the list of equipment and material, to permit verification that the item proposed is of the correct size, properly rated or applied, or is otherwise suitable for the application and fully conforms to the requirements specified.

Spare Parts; G, AO

Spare parts data for each item of material and equipment specified, after approval of detail drawings for materials and equipment, and not later than 4 months before the date of beneficial occupancy. The data shall include a complete list of parts, special tools, and supplies, with current unit prices and sources of supply.

SD-06 Test Reports

Operating Test; G, AO

Test procedures and reports for the Operating Test. After receipt by the Contractor of written approval of the test procedures, the Contractor shall schedule the tests. The final test procedures report shall be delivered after completion of the tests.

Ground Resistance Measurements; G, AO

The measured resistance to ground of each separate grounding

installation, indicating the location of the rods, the resistance of the soil in ohms per millimeter and the soil conditions at the time the measurements were made. The information shall be in writing.

SD-10 Operation and Maintenance Data

Lighting System; G, AO

A draft copy of the operation and maintenance manuals, prior to beginning the tests for use during site testing. Final copies of the manuals as specified bound in hardback, loose-leaf binders, within 30 days after completing the field test. The draft copy used during site testing shall be updated with any changes required, prior to final delivery of the manuals. Each manual's contents shall be identified on the cover. The manual shall include names, addresses, and telephone numbers of each subcontractor installing equipment and systems, and nearest service representatives for each item of equipment for each system. The manuals shall have a table of contents and tab sheets. Tab sheets shall be placed at the beginning of each chapter or section and at the beginning of each appendix. The final copies delivered after completion of the field test shall include modifications made during installation checkout and acceptance.

1.3 SYSTEM DESCRIPTION

1.3.1 Lighting System

The lighting system shall be configured as specified and shown. The system shall include all fixtures, hardware, poles, cables, connectors, adapters and appurtenances needed to provide a fully functional lighting system.

1.3.3 Electrical Requirements

The equipment shall operate from a voltage source as shown, plus or minus 10 percent, and 60 Hz, plus or minus 2 percent.

1.3.6 Interface Between Lighting System and Power Distribution

Conductors shall be as specified and as indicated.

1.3.7 Nameplates

Each major component of equipment shall have a nonferrous metal or engraved plastic nameplate which shall show, as a minimum, the manufacturer's name and address, the catalog or style number, the electrical rating in volts, and the capacity in amperes or watts.

1.3.8 Standard Products

Materials and equipment shall be standard products of manufacturer regularly engaged in the manufacture of such products. Items of equipment shall essentially duplicate equipment that has been in satisfactory use at least 2 years prior to bid opening.

1.3.9 Unusual Service Conditions

Equipment and materials furnished under this section shall be suitable for the following unusual service conditions: altitude 3000 m,feet, low ambient temperature -15 degrees C. F.

1.4 CORROSION PROTECTION

1.4.1 Aluminum Materials

Aluminum shall not be used in contact with earth or concrete. Where aluminum conductors are connected to dissimilar metal, fittings conforming to UL 486B shall be used.

1.4.2 Ferrous Metal Materials

1.4.2.1 Hardware

Ferrous metal hardware shall be hot-dip galvanized in accordance with ASTM A 153/A 153M and ASTM A 123/A 123M.

1.4.2.2 Equipment

Equipment and component items, including but not limited to metal poles and ferrous metal luminaires not hot-dip galvanized or porcelain enamel finished, shall be provided with corrosion-resistant finishes which shall withstand 120 hours of exposure to the salt spray test specified in ASTM B 117 without loss of paint or release of adhesion of the paint primer coat to the metal surface in excess of 1.6 mm (1/16 inch) 1/16 inch from the test mark. The scribed test mark and test evaluation shall have a rating of not less than 7 in accordance with TABLE 1, (procedure A) of ASTM D 1654. Cut edges or otherwise damaged surfaces of hot-dip galvanized sheet steel or mill galvanized sheet steel shall be coated with a zinc rich paint conforming to the manufacturer's standard.

1.4.3 Finishing

Painting and finishes shall be as indicated and as speciifed in the relative section.

PART 2 PRODUCTS

2.1 STANDARD PRODUCT

Material and equipment shall be the standard product of a manufacturer regularly engaged in the manufacture of the product and shall essentially duplicate items that have been in satisfactory use for at least 2 years prior to bid opening. Items of the same classification shall be identical including equipment, assemblies, parts, and components.

2.2 BRACKET ARMS

2.2.1 On Aluminum Poles

Poles shall be provided with bracket arms of the support arm or davit style and of the length indicated on drawings. Bracket arms shall conform to the design of the pole provided. The bracket arms shall be capable of

supporting the equipment to be mounted on it with the maximum wind and ice loading encountered at the site. Strength of bracket arms shall be in accordance with IEEE C136.13. Steel brackets shall be galvanized. Wood bracket arms shall not be used.

2.3 CABLE

The Contractor shall provide all wire and cable not indicated as government furnished equipment. Wire and cable components shall be able to withstand the jobsite environment for a minimum of 20 years.

2.3.1 Insulated Cable

Cable shall be type USE conforming to UL 854, with copper conductors and type RHW or XHHW insulation conforming to UL 44, and shall include green ground conductor. Cable shall be provided with insulation of a thickness not less than that given in column A of TABLE 15.1 of UL 854. Cable shall be rated 600 volts. Parts of the cable system such as splices and terminations shall be rated not less than 600 volts. The size and number of conductors and the number of cables shall be as indicated. Conductors larger than No. 8 AWG shall be stranded.

2.5 CABLE SPLICES AND CONNECTORS

Cable splices and connectors shall conform to UL 486A. Underground splices and connectors shall also conform to the requirements of ANSI C119.1.

2.7 MANHOLES, HANDHOLES, AND PULLBOXES

Manholes, handholes, and pullboxes shall be as indicated. Strength of manholes, handholes, and pullboxes and their frames and covers shall conform to the requirements of IEEE C2. Precast concrete manholes shall have the required strength established by ASTM C 478. Frames and covers for manholes shall be made of gray cast iron or cast steel. A machine-finished seat shall be provided to ensure a matching joint between frame and cover. Cast iron shall comply with ASTM A 48M ASTM A 48, Class 30B, minimum. Handholes for low voltage cables installed in parking lots, sidewalks, and turfed areas shall be from an aggregate consisting of sand and with continuous woven glass strands having an overall compressive strength of at least [69] [_____] MPa 10,000 psi and a flexural strength of at least [34.5] [_____] MPa 5,000 psi. Pullbox and handhole covers in parking lots, sidewalks, and turfed areas shall be of the same material as the box. A sufficient number of tamperproof bolts shall be installed to hold the cover firmly in place along the entire surface of contact; a tool for the tamperproof bolts shall be furnished.

2.8 CONDUIT, DUCTS AND FITTINGS

2.8.1 Conduit, Rigid Steel

Rigid steel conduit shall conform to ANSI C80.1 and UL 6.

2.8.2 Conduit Coatings

Underground metallic conduit and fittings shall be coated with a plastic resin system conforming to NEMA RN 1, Type 40. Epoxy systems may also be used.

2.8.3 Conduit Fittings and Outlets

2.8.3.1 Boxes, Metallic Outlets

NEMA OS 1 and UL 514A.

2.8.3.5 Fittings for Conduit and Outlet Boxes

UL 514B.

2.8.3.7 Fittings, PVC, for Use with Rigid PVC Conduit and Tubing

UL 514B.

2.8.4 Non-Metallic Duct

Non-metallic duct lines and fittings utilized for underground installation shall be suitable for the application. Duct shall be thick-wall, single, round-bore type. Material of one type shall be used. Acrylonitrile-butadiene-styrene (ABS) duct shall conform to NEMA TC 6and NEMA TC 9. High-density conduit shall conform to UL 651A. Schedule 40 polyvinyl chloride (PVC) shall conform to UL 651. Plastic utility duct and fittings manufactured without a UL label or listing shall be provided with a certification as follows: "The materials are suitable for use with 75 degree C (167 degrees F) 167 degree F wiring. No reduction of properties in excess of that specified for materials with a UL label or listing will be experienced if samples of the finished product are operated continuously under the normal conditions that produce the highest temperature in the duct."

2.10 GROUND RODS

Ground rods shall be of copper clad steel conforming to UL 467 or solid stainless steel not less than [15.9 mm (5/8 inch)] [19.1 mm (3/4 inch)] 3/4 inch in diameter by [2.4 m (8 feet)] [3.1 m (10 feet)] 10 feet in length of the sectional type driven full length into earth.

2.11 POLES

Metal and concrete poles shall be the pole manufacturer's standard design for supporting the number of fixtures indicated. Poles shall be designed for a wind velocity of [31.3 meters per second (70 mph)] [35.8 meters per second (80 mph)] [40.2 meters per second (90 mph)] [44.7 meters per second (100 mph)] [49.2 meters per second (110 mph)] [[_____] meters per second ([_____] mph)] 110 mph at the base of the pole, for a wind gust factor of 1.3, and for the height and drag factors recommended by AASHTO LTS-3, with the light fixtures installed. The effective projected area of luminaires and other pole-mounted devices shall be taken into account in pole design. Poles shall have grounding provisions. The type of pole shaft material provided shall not be mixed on any project. Grounding connection shall be provided near the bottom of each metal pole and at each concrete pole anchor base. Scratched, stained, chipped, or dented poles shall not be installed.

2.11.1 Aluminum Poles

Aluminum poles and brackets shall have a dark anodic bronze finish to match

fixtures and shall not be painted. Manufacturer's standard provision shall be made for protecting the finish during shipment and installation. Minimum protection shall consist of spirally wrapping each pole shaft with protective paper secured with tape, and shipping small parts in boxes.

a. Shafts shall be round and of seamless construction. The wall thickness shall be at least 4.8 mm (0.188 in). 0.188 inch. Exterior surfaces shall be free of protuberances, dents, cracks, and discoloration. Material for shafts shall be 6063 aluminum alloy; after fabrication, the alloy shall have a T6 temper. Tops of shafts shall be fitted with a round or tapered cover. Bases shall be anchor bolt mounted, made of cast aluminum alloy 356-T6, and shall be machined to receive the lower end of shafts. Joints between shafts and bases shall be welded. Bases shall be provided with four holes, spaced 90 degrees apart, for anchorage.

b. Hardware, except anchor bolts, shall be either 2024-T4 anodized aluminum alloy or stainless steel.

2.11.6 Anchor Bolts

Anchor bolts shall be the pole manufacturer's standard, but not less than necessary to meet the pole wind and ice loading, herein and other specified design requirements.

2.12 POLE LINE HARDWARE

Zinc coated hardware shall conform to ANSI C135.1 and ANSI C135.14, and steel hardware material shall conform to ASTM A 575 and ASTM A 576. Hardware shall be hot-dip galvanized in accordance with ASTM A 153/A 153M.

2.14 ELECTRICAL ENCLOSURES

The Contractor shall provide metallic enclosures as needed to house lighting equipment. Enclosures shall conform to NEMA ICS 6 and NEMA 250. Enclosures shall be provided with lockable or padlock handles. Keys for lockable enclosures shall be delivered to the Contracting Officer. The enclosures shall be as specified or as shown on the drawings.

2.14.1 Interior Enclosures

Enclosures to house lighting equipment in an interior environment shall meet the requirements of a NEMA 12 enclosure as defined in NEMA 250.

2.14.2 Exposed-to-Weather Enclosures

Enclosures to house lighting equipment in an outdoor environment shall meet the requirements of a NEMA 4XSS enclosure as defined in NEMA 250.

2.14.3 Corrosion Resistant Enclosures

Enclosures to house lighting equipment in a corrosive environment shall meet the requirements of a NEMA 4X enclosure as defined in NEMA 250.

2.15 ILLUMINATION

2.15.1 General Lighting

Luminaires, ballasts, lamps, and control devices required for area lighting shall be in accordance with details indicated on the drawings.

2.15.2 Roadway Lighting

Luminaires, ballasts, lamps, and control devices required for roadway lighting shall be in accordance with details indicated and as specified herein.

2.16 LAMPS AND BALLASTS, HIGH INTENSITY DISCHARGE (HID) SOURCES

2.16.1 High-Pressure Sodium

Lamps shall conform to ANSI C78.1351. Ballasts shall conform to ANSI C82.4, or UL 1029. High-pressure sodium lamps shall be clear.

2.16.3 Metal-Halide

Lamps shall be made by a manufacturer with not less than 5 years experience in making metal-halide lamps. Metal-halide lamps shall conform to ANSI C78.1375 or ANSI C78.1376. Ballasts shall conform to ANSI C82.4 or UL 1029.

2.18 LAMPS, FLUORESCENT

Fluorescent lamps shall have standard cool-white color characteristics and shall not require starter switches. The lamps shall be of the rapid-start type.

2.19 LUMINAIRE COMPONENTS

Luminaire components shall conform to the following: attachments, ANSI C136.3; voltage classification, ANSI C136.2; field identification marking, ANSI C136.15; interchangeability, ANSI C136.6 and ANSI C136.9; and sockets, ANSI C136.11.

2.20 LIGHTING CONTROL EQUIPMENT

2.20.1 Photo-Control Devices

Photo-control devices shall conform to ANSI C136.10. Each photo-control element shall be a replaceable, weatherproof, plug-in or twist-lock assembly adjustable operation range of approximately 5.4 to 53.8 lux. 0.5 to 5.0 foot-candles. Luminaires shall be equipped with weatherproof plug-in or twist-lock receptacle to receive the photo-control element.

2.20.2 Timer Control Switches

Astronomic digital dial type arranged to turn "ON" at sunset, and turn "OFF" at a pre-determined time between 2030 hours hours and 0230 hours hours or sunrise, automatically changing the settings each day in accordance with seasonal changes of sunset and sunrise shall be provided. A switch rated 600 volts, having battery backed electronic clock to maintain accurate time for a minimum of 7 hours following a power failure shall be provided. A time switch with a manual on-off bypass switch shall be provided. Housing for the time switch shall be a surface mounted, NEMA 1 (indoor) enclosure conforming to NEMA ICS 6.

2.20.3 Manual Control Switches

Manual control switches shall conform to UL 98. The switches shall be the heavy-duty type and shall be suitable for operation on a 120 volt, 60 Hz system. The number of poles and ampere rating shall be as indicated. Switch construction shall be such that a screwdriver will be required to open the switch door when the switch is on. The selector switch shall have a minimum of three positions: ON, OFF, and AUTOMATIC. The automatic selection shall be used when photoelectric or timer control is desired. The selector switch shall interface with the lighting system magnetic contactor and control its activity.

2.20.4 Safety Switches

Switches shall be the heavy-duty type with NEMA ICS 6 Type 1 enclosures and shall be suitable for operation on a 480Y/277 volt, 60 Hz, three-phase system. Switch construction shall be such that a screwdriver will be required to open the switch door when the switch is on. Blades shall be visible with door open and shall be of the quick-make, quick-break type. Terminal lugs shall be coordinated with the wire size. Switches shall conform to UL 98.

2.20.5 Magnetic Contactor

Magnetic contactors shall be mechanically held, electrically operated, and shall conform to NEMA ICS 1 and NEMA ICS 2. The contactor shall be suitable for 480 volts, single phase, 60 Hz. Coil voltage shall be 277 volts. Maximum continuous ampere rating and number of poles shall be as indicated on drawings. Enclosures for contactors mounted indoors shall be NEMA ICS 6, Type 1. Each contactor shall be provided with a spare, normally open auxiliary contact. Terminal lugs shall be coordinated with the wire size.

2.21 PHOTOMETRIC DISTRIBUTION CLASSIFICATION

Photometrics shall conform to IESNA RP-8.

2.22 LUMINAIRES, FLOODLIGHTING

2.22.1 HID

HID lighting fixtures shall conform to UL 1572.

2.23 FIXTURES

Standard fixtures shall be as detailed on drawings, which accompany and form a part of this specification. Special fixtures shall be as indicated on the drawings. Illustrations shown on these sheets or on the drawings are indicative of the general type desired and are not intended to restrict selection to fixtures of any particular manufacturer. Fixtures of similar design, equivalent light distribution and brightness characteristics, equal finish and quality will be acceptable as approved.

2.23.1 Accessories

Accessories such as straps, mounting plates, nipples, or brackets shall be provided for proper installation.

2.23.3 In-Line Fuse

An in-line fuse shall be provided for each fixture, and shall consist of a fuse and a UL approved waterproof fuse holder rated at 20 amperes, 600 volts, with insulated boots. Fuse rating shall be 600 volts, 15 ampere.

PART 3 EXECUTION

3.1 GENERAL

The Contractor shall install all system components, including government furnished equipment, and appurtenances in accordance with the manufacturer's instructions, IEEE C2, and contract documents, and shall furnish necessary hardware, fixtures, cables, wire, connectors, interconnections, services, and adjustments required for a complete and operable system.

3.1.1 Current Site Conditions

The Contractor shall verify that site conditions are in agreement with the design package. The Contractor shall report all changes to the site or conditions that will affect performance of the system to the Government. The Contractor shall not take any corrective action without written permission from the Government.

3.2 ENCLOSURE PENETRATIONS

Enclosure penetrations shall be from the bottom unless the system design requires penetrations from other directions. Penetrations of interior enclosures involving transitions of conduit from interior to exterior, and penetrations on exterior enclosures shall be sealed with rubber silicone sealant to preclude the entry of water. The conduit riser shall terminate in a hot-dipped galvanized metal cable terminator. The terminator shall be filled with an approved sealant as recommended by the cable manufacturer, and in such a manner that the cable is not damaged.

3.3 PREVENTION OF CORROSION

3.3.1 Aluminum

Aluminum shall not be used in contact with earth or concrete, and where connected to dissimilar metal, shall be protected by approved fittings and treatment.

3.3.2 Steel Conduits

Steel conduits shall not be installed within concrete slabs-on-grade or in earth. Steel conduits installed underground or under slabs-on-grade, or penetrating slabs-on-grade, shall be field wrapped with 254 micrometers (0.010 inch) 0.010 inch thick pipe-wrapping plastic tape applied with a 50 percent overlap, or shall have a factory-applied plastic resin, epoxy coating. Zinc coating may be omitted from steel conduit which has a factory-applied epoxy coating.

3.3.3 Cold Galvanizing

Field welds and/or brazing on factory galvanized boxes, enclosures,

conduits, etc. shall be coated with a cold galvanized paint containing at least 95 percent zinc by weight.

3.4 CABLE INSTALLATION

Cable and all parts of the cable system such as splices and terminations shall be rated not less than 600 volts. The size and number of conductors and the number of cables shall be as indicated. Conductors larger than No. 8 AWG shall be stranded. Each circuit shall be identified by means of fiber or nonferrous metal tags, or approved equal, in each handhole and at each terminal.

3.4.1 Splices

Splices below grade shall be made with nonpressure-filled resin systems using transparent, interlocking, self-venting, longitudinally split plastic molds. Splices above grade shall be made with sealed insulated pressure connectors and shall provide insulation and jacket equal to that of the cable. In order to prevent moisture from entering the splice, jackets shall be cut back to expose the required length of insulation between the jacket and the tapered end of the insulation.

3.4.2 Installation in Duct Lines

[Ground] [Ground and neutral] conductors shall be installed in duct with the associated phase conductors. Cable splices shall be made in handholes only.

3.8 CONNECTIONS TO BUILDINGS

Cables shall be extended into the various buildings as indicated and shall be properly connected to the indicated equipment. After installation of cables, conduits shall be sealed to prevent moisture or gases from entering the building.

3.9 DUCT LINES

3.9.1 Requirements

Numbers and size of ducts shall be as indicated. Duct lines shall be laid with a minimum slope of 100 mm per 30 m. 4 inches per 100 feet. Depending on the contour of the finished grade, the high point may be at a terminal, a manhole, a handhole, or between manholes or handholes. Short radius manufactured 90 degree duct bends may be used only for pole or equipment risers, unless specifically indicated as acceptable. The minimum manufactured bend radius shall be 450 mm (18 inches) 18 inches for ducts of less than 80 mm (3 inches) 3 inches in diameter, and 900 mm (36 inches) 36 inches for duct 80 mm (3 inches) 3 inches or greater in diameter. Otherwise, long sweep bends having a minimum radius of 7.6 m (25 feet) 25 feet shall be used for a change of direction of more than 5 degrees, either horizontally or vertically. Both curved and straight sections may be used to form long sweep bends, but the maximum curve used shall be 30 degrees and manufactured bends shall be used. Ducts shall be provided with end bells when duct lines terminate in manholes or handholes.

3.9.2 Treatment

Ducts shall be kept clean of concrete, dirt, or foreign substances during construction. Field cuts requiring tapers shall be made with proper tools and shall match factory tapers. A coupling recommended by the duct manufacturer shall be used when an existing duct is connected to a duct of different material or shape. Ducts shall be stored to avoid warping and deterioration with ends sufficiently plugged to prevent entry of any water or solid substances. Ducts shall be thoroughly cleaned before being laid. Plastic ducts shall be stored on a flat surface and protected from the direct rays of the sun.

3.9.3 Concrete Encasement

Ducts requiring concrete encasements shall comply with NFPA 70 except that electrical duct bank configurations for ducts 150 mm (6 inches) 6 inches in diameter shall be determined by calculation and as shown on the drawings. Duct line encasements shall be monolithic construction. Where a connection is made to a previously poured encasement, the new encasement shall be well bonded or doweled to the existing encasement. At any point, except railroad and airfield crossings, tops of concrete encasements shall not be less than the cover requirements listed in NFPA 70. At railroad and airfield crossings, duct lines shall be encased with concrete and reinforced as indicated to withstand specified surface landings. Tops of concrete encasement shall not be less than 1.5 m 5 feet below tops of rails or airfield paving unless otherwise indicated. Where ducts are jacked under existing pavement, rigid steel conduit shall be installed. To protect the corrosion-resistant conduit coating, predrilling or installing conduit inside a larger iron pipe sleeve (jack-and-sleeve) is required. For crossings of existing railroads and airfield pavements greater than 15 m 50 feet in length, the predrilling method or the jack-and-sleeve method shall be used. Separators or spacing blocks shall be made of steel, concrete, plastic, or a combination of these materials placed not more than 1.2 m 4 foot on centers. Ducts shall be securely anchored to prevent movement during the placement of concrete, and joints shall be staggered at least 150 mm 6 inches vertically.

3.9.4 Nonencased Direct-Burial

Top of duct lines shall be below the frost line depth of 18 mm, inches, but not less than 36 mm inches below finished grade and shall be installed with a minimum of 75 mm 3 inches of earth around each duct, except that between adjacent electric power and communication ducts, 300 mm 12 inches of earth is required. Bottom of trenches shall be graded toward manholes or handholes and shall be smooth and free of stones, soft spots, and sharp objects. Where bottoms of trenches comprise materials other than sand, a 75 mm 3 inch layer of sand shall be laid first and compacted to approximate densities of surrounding firm soil before installing ducts. Joints in adjacent tiers of duct shall be vertically staggered at least 150 mm. 6 inches. The first 150 mm 6 inch layer of backfill cover shall be sand compacted as previously specified. The rest of the excavation shall be backfilled and compacted in 75 to 150 mm 3 to 6 inch layers. Duct banks may be held in alignment with earth. However, high tiered banks shall use a wooden frame or equivalent form to hold ducts in alignment prior to backfilling.

3.9.5 Installation of Couplings

Joints in each type of duct shall be made up in accordance with the manufacturer's recommendation for the particular type of duct and coupling

selected and as approved.

3.9.5.1 Plastic Duct

Duct joints shall be made by brushing a plastic solvent on insides of plastic coupling fittings and on outsides of duct ends. Each duct and fitting shall then be slipped together with a quick 1/4 turn to set the joint tightly.

3.9.6 Concrete

Concrete work shall be as specified in Section 03300 CAST-IN-PLACE STRUCTURAL CONCRETE. Concrete shall be plain, 17 MPa (2500 psi) 2500 psi at 28 days, except that reinforced concrete shall be 21 MPa (3000 psi) 3000 psiat 28 days. Duct line encasement shall be of monolithic construction. Where a connection is made to an existing duct line, the concrete encasement shall be well bonded or doweled to the existing encasement.

3.9.7 Duct Line Markers

Duct line markers shall be provided at the ends of long duct line stubouts or for other duct locations that are indeterminate because of duct curvature or terminations at completely below-grade structures. In addition to markers, a 0.127 mm (5 mil) 5 mil brightly colored plastic tape, not less than 75 mm (3 inches) 3 inches in width and suitably inscribed at not more than 3 m (10 feet) 10 feet on centers with a continuous metallic backing and a corrosion-resistant 0.0254 mm (1 mil) 1 mil metallic foil core to permit easy location of the duct line, shall be placed approximately 300 mm 12 inches below finished grade levels of such lines.

3.10 HANDHOLES

The exact locations shall be determined after carefully considering the locations of other utilities, grading, and paving. Exact locations shall be approved before construction is started.

3.10.1 Construction

Handholes shall be constructed as indicated on drawings, including appurtenances. Top, walls, and bottom shall consist of reinforced concrete. Walls and bottom shall be of monolithic construction. Concrete shall be 21 MPa 3000 psi at 28 days. Precast concrete handholes having the same strength and inside dimensions as cast-in-place concrete handholes may be used. In paved areas, the top of entrance covers shall be flush with the finished surface of the paving. In unpaved areas, the top of entrance covers shall be approximately 15 mm 1/2 inch above the finished grade. Where finished grades are in cut areas, unmortared brick shall be installed between the top of handhole and entrance frame to temporarily elevate the entrance cover to existing grade level. Where duct lines enter walls, the sections of duct may be cast in the concrete or may enter the wall through a suitable opening. The openings around entering duct lines shall be caulked tight with lead wool or other approved material.

3.10.2 Appurtenances

The following appurtenances shall be provided for each handhole.

3.10.3 Cable Pulling-In Irons

A cable pulling-in iron shall be installed in the wall opposite each duct line entrance.

3.10.4 Ground Rods

In each handhole, at a convenient point close to the wall, a ground rod conforming to paragraph GROUNDING shall be driven into the earth before the floor is poured; approximately 100 mm 4 inches of the ground rod shall extend above the floor after pouring. When precast concrete units are used, the top of the ground rod may be below the floor; a No. 1/0 AWG copper ground conductor shall be brought inside through a watertight sleeve in the wall.

3.11 POLE INSTALLATION

Luminaire mounting height may be increased by the height of the transformer base where required. Electrical cabling shall be provided to the light pole as specified in Section 16375A. The mount interfaces shall have ac power connected, and the pole wiring harness shall be connected to the luminaire. Light poles shall not be installed outside the site or inside the perimeter zone. Pole installation shall conform to the manufacturer's recommendations, NFPA 70, and IEEE C2. Poles shall be set straight and plumb.

3.11.1 Pole Brackets

Brackets shall be installed as specified by the manufacturer and as shown on drawings. Mounting hardware shall be sized appropriately to secure the mount, luminaire, and housing with wind and ice loading normally encountered at the site. Pole brackets for floodlights shall have the number of tenons indicated, arranged to provide the indicated spread between each tenon. Where indicated on drawings, adjustable heads shall be installed on the brackets to position the luminaires. Identical brackets shall be used with one type of luminaire.

3.11.2 Concrete Foundations

Concrete foundations shall have anchor bolts accurately set in the foundation using a template supplied by the pole manufacturer. Once the concrete has cured, the pole shall be set on the foundation, leveled on the foundation bolts, and secured with the holding nuts. The space between the foundation and the pole base shall be grouted. Concrete and grout work shall conform to Section 03300 CAST-IN-PLACE STRUCTURAL CONCRETE. Concrete shall be 21 MPa (3000 psi) 3000 psi at 28 days.

3.11.3 Rigid Steel Conduit Ells

Rigid steel conduit ells shall be provided at all poles. Rigid steel conduit shall be connected to the ells and shall extend to a minimum height of 3 m 10 feet above grade. Rigid steel conduit ells shall be provided for wood poles, where required

3.11.5 Aluminum Pole Installation

Poles shall be mounted on cast-in-place foundations. Concrete poles shall

be embedded in accordance with the details shown. Conduit elbows shall be provided for cable entrances into pole interiors.

3.11.5.1 Cast-In-Place Foundations

Concrete foundations, sized as indicated, shall have anchor bolts accurately set in foundations using templates supplied by the pole manufacturer. Concrete work and grouting is specified in Section 03300 CAST-IN-PLACE STRUCTURAL CONCRETE. After the concrete has cured, pole anchor bases shall be set on foundations and leveled by shimming between anchor bases and foundations or by setting anchor bases on leveling nuts and grouting. Poles shall be set plumb. Anchor bolts shall be the manufactures standard, and not less than necessary to meet the pole wind loading and other specified design requirements.

3.12 LIGHTING

3.12.1 Lamps

Lamps of the proper type, wattage, and voltage rating shall be delivered to the project in the original containers and installed in the fixtures just before completion of the project.

3.12.2 Fixture Installation

Standard fixtures shall be installed as detailed on drawings, which accompany and form a part of this specification. Special fixtures shall be as indicated on drawings. Illustrations shown on these sheets or on the drawings are indicative of the general type desired and are not intended to restrict selection of fixtures to any particular manufacturer. Fixtures of similar design, equivalent light-distribution and brightness characteristics, and equal finish and quality will be acceptable as approved.

3.12.2.1 Accessories

Accessories such as straps, mounting plates, nipples, or brackets shall be installed as required for proper installation.

3.12.2.2 In-Line Fuses

An in-line fuse shall be provided for each fixture.

3.14 LIGHTING CONTROL SYSTEM

3.14.1 Photo-Control

Lighting luminaires shall be controlled in banks by a single photo-control element mounted within each bank in combination with a manual select and digital timer and contatcor control system.

3.14.2 Time Control Switches

Switches shall be installed with not less than four 6.4 mm (1/4 inch) 1/4 inch bolts. The use of sheet metal screws will not be allowed.

3.14.3 Manual and Safety Switches

Terminal lugs shall be coordinated with the wire size. Switches shall be securely fastened to the supporting structure or wall using not less than four 6.4 mm (1/4 inch) 1/4 inch bolts. The use of sheet metal screws will not be allowed.

3.14.4 Magnetic Contactors

Terminal lugs shall be coordinated with the wire size. Switches shall be securely fastened to the supporting structure or wall using not less than four 6.4 mm (1/4 inch) 1/4 inch bolts. The use of sheet metal screws will not be allowed.

3.15 GROUNDING

Grounding shall be in conformance with NFPA 70, the contract drawings, and the following. Grounding conductors shall be soft-drawn, stranded copper. Ground rods shall be driven into the earth so that after the installation is complete, the top of the ground rod will be approximately 300 mm 1 foot below finished grade, except in handholes.

3.15.1 Ground Rods

The resistance to ground shall be measured using the fall-of-potential method described in IEEE Std 81. The maximum resistance of a driven ground rod shall not exceed 10 ohms under normally dry conditions. Whenever the required ground resistance is not met, additional electrodes shall be provided interconnected with grounding conductors, to achieve the specified ground resistance. Connections above grade shall be fusion welded or shall use UL 467 approved connectors.

3.15.2 Items to be Grounded

Ground conductors, metallic conduits, junction boxes, and noncurrent-carrying metallic parts of equipment shall be grounded. Connections above grade shall be made with solderless connectors, and those below grade shall be made by a fusion-welding process.

3.15.3 Lighting Pole

One ground rod shall be provided at each pole. Bases of metal or concrete lighting poles shall be connected to ground rods by means of No. 8 AWG bare copper wire.

3.15.4 Handhole

In each handhole, at a convenient point close to the wall, a ground rod shall be driven into the earth before the floor is poured, and approximately 100 mm 4 inches of the ground rod shall extend above the floor after pouring. When precast concrete units are used, the top of the ground rod may be below the floor, and a No. 1/0 AWG copper ground conductor shall be brought inside through a watertight sleeve in the wall. Connection to ground rods shall be by means of bolted-clamp terminals or by an approved fusion-welding process. Ground wires shall be neatly and firmly attached to handhole walls, and the amount of exposed bare wire shall be held to a minimum.

3.16 TESTS

3.16.2 Operating Test

After the installation is completed and at such time as the Contracting Officer may direct, the Contractor shall conduct an operating test for approval. The equipment shall be demonstrated to operate in accordance with the requirements specified. The test shall be performed in the presence of the Contracting Officer. The Contractor shall furnish instruments and personnel required for the test, and the Government will furnish the necessary electric power.

3.16.3 Ground Resistance Measurements

The resistance to ground shall be measured by the fall-of-potential method described in IEEE Std 81.

The contractor shall maintain a separate set of drawings, elementary diagrams and wiring diagrams of the lighting to be used for "as-built" drawings. This set shall be accurately kept up to date by the Contractor with all changes and additions to the lighting system. In addition to being complete and accurate, this set of drawings shall be kept neat and shall not be used for installation purposes. Upon completion of the as-built drawings, a representative of the Government will review the as-built work with the Contractor. If the as-built work is not complete, the Contractor will be so advised and shall complete the work as required.

-- End of Section --

Attachment 5 - Geotechnical Information

CARLIN • SIMPSON & ASSOCIATES

Subsurface Soil and Foundation Investigation

Proposed East of Hudson Administration Building
Mt. Pleasant, NY (03-78)

Consulting
Geotechnical and Environmental
Engineers

61-67 Main Street
Sayreville, New Jersey 08872

Subsurface Soil and Foundation Investigation

Proposed East of Hudson Administration Building
Mt. Pleasant, NY (03-78)

CARLIN • SIMPSON & ASSOCIATES

Consulting Geotechnical and Environmental Engineers

61 Main Street, Sayreville, New Jersey 08872
Tel. (732) 432-5757
Fax. (732) 432-5717

Principal:
Robert B. Simpson, P.E.

Associates:
Robert H. Barnes, P.E.
Kurt W. Anke
Meredith R. Roessner
Eric J. Shaw

Consultant:
Robert J. Carlin, P.E.

14 October 2003

The TAF Group
100 Landmark Square
Virginia Beach, VA 23452

Att: Mr. Lenny Matthews

Re: Report on Subsurface Soil and Foundation Investigation
Proposed East of Hudson Administration Building
Mt. Pleasant, NY (03-78)

Dear Mr. Matthews:

In accordance with our proposal dated 20 April 2003 and your subsequent authorization, we have completed a Subsurface Soil and Foundation Investigation for the referenced site. The purpose of this study was to determine the nature and engineering properties of the subsurface soil and the groundwater conditions for the new building, to recommend a practical foundation scheme, and to determine the allowable bearing capacity of the site soils.

We understand that the planned construction will consist of a two-story building, paved parking and a stormwater management area. To guide us in our study, we have been provided with a site plan that indicates the location of the planned new construction. The proposed finished floor elevation will be +321.00. The basement level will be about 15 feet lower.

Our scope of work for this project included the following:

Reviewed the proposed site plan, the existing site conditions, the expected soil conditions, and planned this study.

2. Retained General Borings, Inc. to advance six borings at the site.

3. Laid out the boring locations in the field, provided full time inspection of the borings, obtained soil samples, prepared detailed boring logs and a Boring Location Plan.

4. Performed grain size analyses hydrometer tests and a California Bearing Ratio (CBR) test on selected soil samples in our laboratory.

5. Analyzed the field and laboratory test data and prepared this report containing the results of this study.

SITE DESCRIPTION

The project site is located on the northern side of Grasslands Road (NYS Highway Route 100C), west of Hammond House Road and to the east of Beeline Boulevard, in Mount Pleasant, New York. The property has been partially cleared of trees and surface vegetation. The remainder of the site to the north is wooded. Existing site grades slope gently from east to west, except along the Beeline Boulevard where the ground surface slopes moderately downward to the roadway. Existing surface elevations vary from about elevation +301.0 to elevation +321.5.

SOIL CONDITIONS

To determine the subsurface soil and groundwater conditions at the site, we advanced six borings at the locations shown on the enclosed Boring Location Plan. Detailed boring logs have been prepared and are included in this report. All soil samples were visually identified by our inspector and selected samples were tested in our laboratory. The test results are included in this report.

The soil descriptions shown on the boring logs are based on the Burmister Classification System. In this system, the soil is divided into three components: Sand (S), Silt ($) and Gravel (G). The major component is indicated in all capital letters, the lesser in lower case letters. The quantity of each lesser component is indicated by the following modifiers:

Modifier	Quantity
trace (t)	0 – 10%
little (l)	10% - 20%
some (s)	20% - 35%
and (a)	35% - 50%

The subsurface soil conditions encountered in the borings can be summarized as follows:

Stratum 1
Topsoil

The surface layer in each boring is brown or gray brown topsoil varying from 4 to 6 inches in thickness.

Stratum 2
Sandy SILT

Beneath the surface topsoil is medium stiff to stiff brown or gray brown SILT little to and, coarse to fine Sand, trace medium to fine Gravel. The sandy silt continues to depths ranging from 9'0" to 22'0" below the surface.

Stratum 3
Silty SAND

Underlying the sandy silt in boring B-1 is dense gray brown medium to fine SAND, and Silt. Boring B-1 was terminated in the silty sand at a final depth of 19'0".

Groundwater was encountered in borings B-1 and B-2 at elevation +302.5 and elevation +305.8 respectively. Groundwater may be encountered during the construction of the basement.

EVALUATION

According to the site plans, the proposed building will be a two-story structure with a basement. The planned finished floor elevation is +321.0. The basement floor elevation is expected to be about 15 feet lower at elevation +306.0. Existing grades in the planned building area vary between elevation +320.0 and elevation +321.5. Based on the proposed and existing grades, a cut of approximately 15.5 feet is expected to achieve the basement floor elevation.

The boring data indicates that the subsurface soils beneath the surface topsoil consist of medium stiff to stiff sandy silt (Stratum 2) and dense to very dense silty sand (Stratum 3) extending to varying depths ranging from 15'1" to 22'0" below the ground surface. In borings B-1, B-3 and B-4, weathered bedrock may have been encountered at the bottom of the boring as indicated by the auger refusal in boring B-1 at a depth of 19'0" and the spoon refusals in borings B-3 and B-4 at depths of 15'1" and 16'7". The undisturbed sandy silt, silty sand and weathered bedrock are capable of supporting the proposed building.

To prepare the new building area for construction, all surface vegetation and topsoil must be completely removed from the new building area extending at least 10 feet beyond the new building lines. After this is completed, the excavation for the basement may proceed.

Building Excavation - Slopes and Slope Protection

We anticipate that a cut up to 16.5 feet will be required to achieve the basement subgrade elevation. Temporary construction excavations should be conducted in accordance with the most recent OSHA guidelines or applicable federal, state or local codes. Based on the boring data and groundwater conditions, we believe that the site soils would be considered either a Type 'B' or a Type 'C' soil as defined the OSHA regulations. For excavations in Type "C" soils, the excavation should either be benched or sloped on a 1.5 horizontal to 1.0 vertical or flatter angle. Type "B" soils should be benched or sloped on a 1.0 horizontal to 1.0 vertical or flatter angle.

An evaluation of the site soil deposits will be required in the field by a qualified person at the time of the excavation to determine which OSHA soil classification should be used. Groundwater encountered during the excavation could destabilize the side of the excavation. An evaluation of the stability of the excavation must be performed if water is encountered. Temporary support may be required to stabilize the excavation. Temporary support (i.e. sheeting and shoring) should be used for any excavation that cannot be sloped in accordance with the applicable regulations.

Removal of Weathered Bedrock in Basement Excavation

The boring data indicates that weathered bedrock may be encountered during the excavation for the basement. Auger or spoon refusal encountered in borings B-1, B-3 and B-4 indicates the possibility of bedrock. The depth at which refusal was encountered in the borings and the corresponding approximate elevation is provided in Table 1 below.

TABLE 1

Boring #	Approximate Surface Elevation (ft)	Estimated Depth to Weathered Bedrock (ft)	Approximate Elevation of Weathered Bedrock (ft)	Depth to Groundwater (ft)	Approximate Elevation of Groundwater (ft)
B-1	+320.5	19.0	+301.5	18'0"	+302.5
B-2	+319.8	>22.0	<+297.8	14'0"	+305.8
B-3	+321.0	15.1	+305.9	---	---
B-4	+321.0	16.6	+304.4	---	---

As shown in the table above, weathered bedrock may be encountered in the basement excavation, specifically in the area around borings B-3 and B-4. Based on our experience with bedrock in this area, we anticipate that most of the weathered rock will be capable of being removed with a large excavator. Isolated areas of harder rock, if encountered, may require a hydraulic hammer for removal.

Handling Groundwater Encountered in the Basement Excavation

Groundwater was observed in borings B-1 and B-2 at elevation +302.5 and +305.8 respectively. Groundwater or perched water may be encountered in the basement excavation. In the event that water is encountered during the excavation, temporary groundwater control measures will be required.

Temporary groundwater control measures shall consist of one or more sump pits and pumps. The sump pits shall consist of a perforated pipe at least 8 inches in diameter, surrounded by crushed stone and filter fabric. The sump pits should be installed just outside the planned building area and at least two feet below the lowest anticipated subgrade elevation. Diversion trenches should be used to direct the water to the sump pits. The pumps should be used to dewater the excavation.

If water has softened the virgin soil subgrade, some type of remediation will be required. When the excavation is relatively dry, the soft soil should be over-excavated and replaced with drier fill. If the excavation is wet or is exposed to excessive moisture, a minimum of 12 inches of soft soil should be removed and replaced with ¾" crushed stone for stabilization. A layer of geotextile fabric such as Mirafi 500X or equivalent shall be placed between the soil subgrade and the crushed stone. An additional layer of fabric will be required between the crushed stone and new soil fill. The on-site representative from Carlin-Simpson & Associates will determine what material is to be removed and will direct the Contractor during this operation.

Placement of New Compacted Fill

New fill required to replace soft or unsuitable soil and to achieve the required slab subgrade elevation shall be either the on-site soil approved by Carlin-Simpson & Associates or imported sand and gravel containing less than 20% passing a No. 200 sieve. The maximum particle size shall be eight inches. The soil removed from the building area will be evaluated by the representative from Carlin-Simpson & Associates to determine its suitability for reuse as fill in the building. Soil that is wet or contains debris, topsoil, organic material or deleterious material is not suitable for use as fill. New fill placed in the building shall be placed in one-foot layers and compacted to 95% of its Maximum Modified Dry Density (ASTM D1557). Each layer shall be tested and approved before placing subsequent layers. The suitability of the on-site soil for use as compacted fill is discussed in a separate section below.

Building Foundations and Slab Floor

The new building foundations may be designed as shallow spread footings utilizing a net design bearing pressure of 2.0 TSF. The foundations shall bear in the sandy silt (Stratum 2), silty sand (Stratum 3) or the new compacted fill approved by Carlin-Simpson & Associates. All exterior foundations shall bear at least four feet below finished outside grade for protection from frost. The basement footings may bear just beneath the floor slab. The wall footings shall have a minimum width of 24 inches and the column footings shall have a minimum dimension of 30 inches. Prior to the placement of formwork, reinforcement steel and concrete, the foundation bearing subgrade shall be cleaned of all loose material and compacted with a mechanical tamper. All footing excavations must be inspected and approved by Carlin-Simpson & Associates prior to the placement of concrete.

According to the boring data, weathered bedrock may be encountered within the excavation for the basement foundations. When continuous wall footings or closely spaced column footings (10 feet or less) bear on dissimilar material (i.e. rock and soil) the potential for differential movement exists. The wall or continuous footings must bear either entirely on rock or entirely on soil for any individual building.

Where both rock and soil exist at the bearing elevation in a foundation excavation, we recommend that a minimum of one foot of rock be removed from beneath the planned footing bottom. The over-excavated one foot shall then be filled with sandy

material containing at least 50% passing a No. 8 sieve and at least 10% but more than 25% passing a No. 200 sieve. The sandy fill shall be placed and compacted to 95% of its Maximum Modified Dry Density. This procedure will create a "cushion" atop the rock and reduce the potential for differential movement. For the soft, rippable rock, this procedure will not be required.

In the event that water has softened the foundation subgrade, a minimum of 12 inches of wet soil shall be removed and replaced with ¾-inch clean crushed stone. The new foundation may then be constructed on the crushed stone.

After the footings and foundation walls are completed, fill will be required to backfill these excavations and to raise grades in the building area to the basement subgrade elevation. New fill shall consist of an approved on-site soil and an imported sand and gravel containing less than 20% passing a No. 200 sieve. The fill shall be placed in layers about one foot thick and each layer shall be compacted to 92% of its Maximum Modified Dry Density (ASTM D1557). Each fill layer shall be placed, compacted, tested and approved before placing subsequent lifts.

The new concrete floor slab can be supported by the densified virgin soil and new compacted fill. The concrete slab for the floor may be designed as a slab on grade. We recommend a Modulus of Subgrade Reaction (k) of 200 pci be used for design. A minimum of 8 inches of crushed stone should be provided beneath the concrete slab for drainage. A sump pit and pump system is recommended for the basement level.

Building settlement will be less than ½ inch, which is within tolerable limits for this structure.

Earth Pressure on Basement Walls

The soil adjacent to the below-grade foundation walls will exert a horizontal pressure against the wall. This pressure is based on the soil density and Coefficient of Earth Pressure at Rest (k_o) which is applicable to non-yielding building walls. The backfill material will have an in-place density of about 130 pcf and $k_o = 0.5$. Based on these properties, the soil will produce an Equivalent Fluid Pressure of 65 pcf against the building walls.

All basement foundation walls should be waterproofed. Foundation drains should be installed at the base of the wall around the perimeter of the building. The drains should be extended to daylight beyond the building or connected to the site stormwater system. Sump pits and pumps are recommended for the basement level to collect the subslab water and discharge it into the stormwater system.

The backfill placed adjacent to the outside of the new foundation walls and above the footing drain shall be granular soil consisting of sand and gravel containing less than 10% passing a No. 200 sieve. This clean sand and gravel backfill shall extend horizontally a minimum of one foot from the back face of the foundation wall and shall extend vertically two feet below the finished ground surface. Beyond this point suitable on-site soil or imported fill may be used as compacted fill. The foundation walls shall be

backfilled in layers approximately one foot thick. The new fill shall be compacted with a small hand guided vibratory compactor to at least 92% of its Maximum Modified Dry Density (ASTM D1557). Large construction equipment must not be used within ten feet of the new basement walls.

Seismic Design Considerations

Structures should be designed to resist stresses produced by lateral forces computed in accordance with Section 1615 of the International Building Code (IBC 2000). Based on the site geological conditions and boring data, the project site can be classified as Site Class 'C' (very dense soil and soft rock) as defined by Table 1615.1 (IBC 2000). The following values can be used for this project.

Mapped Spectral Response Acceleration for Short Periods, [Fig. 1615 (1)]	S_S=0.45g
Mapped Spectral Response Acceleration at 1-Second Period, [Fig.1615 (2)]	S_1=0.10g
Site Coefficient [Table 1615.2 (1)]	F_a = 1.20
Site Coefficient [Table 1615.1.2 (2)]	F_v = 1.70
Maximum Considered Earthquake Spectral Response for Short Periods [Eq. 16-16]	S_{MS} = 0.54g
Maximum Considered Earthquake Spectral Respond at 1-Second Period [Eq. 16-17]	S_{M1} = 0.16g
Design Spectral Response Acceleration for Short Periods [Eq. 16-18]	S_{DS} = 0.36g
Design Spectral Response Acceleration for 1-Second Period [Eq. 16-19]	S_{D1} = 0.11g

Pavement

The site plan indicates that the area around the proposed building will be designed with paved parking areas and access roads for cars and delivery trucks. Minor cuts and fill are expected to be required in the pavement areas.

To prepare the new pavement areas, all surface vegetation and topsoil must be completely removed. After this is completed, the exposed subgrade in the areas that are either at or below the proposed subgrade elevation should be graded level and proofrolled with a large vibratory drum roller. The proofrolling is necessary to densify

the underlying soils. If any excessive movement is noted during the proofrolling, the soft soil should be removed and replaced with new fill.

Where new fill is required to achieve final grades, it may be the on-site soil approved by Carlin-Simpson & Associates or imported sand and gravel fill containing less than 20% passing a No. 200 sieve. The new fill shall be placed in one-foot layers and each layer compacted to at least 92% of its Maximum Modified Dry Density (ASTM D16557).

After the planned subgrade has been proofrolled and new compacted fill has been placed as required, the new pavement subbase may be placed on the densified virgin soil and the new compacted fill. To provide drainage beneath the pavement, a minimum of 8 inches of crushed stone is recommended for the subbase layer.

We recommend that the following pavement section be used for the pavement areas.

2"	Asphalt Wearing Surface	(NYSDOT Type 6)
3"	Asphalt Base Course	(NYSDOT Type 2)
8"	Stone Subbase Course	(DGA)
	Approved Compacted Subgrade	

A CBR test was performed using soil collected at boring location B-5. The CBR value of the sample is 11. We anticipate that the densified virgin soil and new compacted fill will provide a CBR value of at least 10, which can adequately support the above pavement section.

Utilities

The utilities may bear in the undisturbed virgin soil or new compacted fill. The bottom of all trenches should be excavated clean so a hard bottom is provided for the pipe support. If any soft soils are encountered within the excavation for the site utilities, these soils should be removed and replaced with compacted fill. New compacted fill shall be placed in one-foot layers and each layer compacted to at least 92% of its Maximum Modified Dry Density. The backfill must be free of topsoil, organics, debris and rock greater than 4 inches in diameter.

Groundwater was encountered in borings B-1 and B-2 at depths of 18'0" and 14'0" respectively. Groundwater is not expected to be encountered in the utility trench excavations excavated above elevation +306. If the trench bottom becomes soft due to the inflow of surface or trapped water, six inches of crushed stone shall be placed on the bearing soil to provide a firm base for support of the pipe. Sump pits and pumps should be adequate to keep the excavations dry.

Temporary construction excavations should be conducted in accordance with the most recent OSHA guidelines or applicable federal, state or local codes. Based on the boring data, we believe that the site soils would be classified as a Type 'C' soil as defined by the OSHA regulation.

An evaluation of the site soil deposits will be required in the field by a qualified person at the time of the excavation to determine appropriate OSHA soil classification. Perched or trapped groundwater encountered during the excavation could destabilize the sides of the excavation. An evaluation of the excavation stability must be performed if water is encountered. Temporary support (i.e. sheeting or shoring) should be used for any excavation that encountered water or cannot be sloped in accordance with the applicable regulations.

Site Retaining Walls

Retaining walls may be required around the building near the basement access area or in other areas on the site. The virgin soil is capable of supporting the proposed retaining wall. The foundation or base of the new retaining wall shall bear on either the virgin soil or compacted fill approved by Carlin-Simpson & Associates using a net design bearing pressure of 2 TSF. Prior to installing the retaining wall foundation or placing new compacted fill in the wall area, the surface topsoil must be removed and the virgin soil subgrade compacted with several passes of a large vibratory roller.

A drain must be provided behind the wall to prevent the buildup of hydrostatic pressure against the wall. The drain should consist of a 4-inch perforated pipe surrounded with six inches of clean ¾-inch crushed stone wrapped in a geotextile filter fabric. The drainpipe should be connected to the site stormwater system. Backfill placed above the drain and directly adjacent to the new retaining wall shall be sand and/or gravel containing less than 10% passing a No. 200 sieve. This clean sand and gravel backfill shall extend a minimum of one foot from the back face of the wall and extend up to 2 feet below the ground surface. Beyond this point suitable on-site soil approved by Carlin-Simpson & Associates may be used for compacted fill behind the new wall.

The retaining wall shall be backfilled in layers about one foot thick and the new fill shall be compacted with small hand-guided vibratory compactors to a minimum density of 92% Maximum Modified Dry Density. Large rollers shall not be used within 10 feet of the walls.

The soil adjacent to the retaining wall will exert a horizontal pressure against the wall. This pressure is based on the soil density and the Coefficient of Active Earth Pressure (k_a) which is applicable to yielding walls. If the grade behind the wall is sloped, k_a and the corresponding equivalent fluid pressure must be adjusted accordingly. We recommend the following soil parameters be used for the retaining wall design.

Soil Design Parameters

In-place Density of Backfill, $\gamma = 130$ pcf
Internal Angle of Friction, $\phi = 32^o$
Coefficient of Active Earth Pressure, $k_a = 0.31$ (level backfill)
Equivalent Fluid Pressure, E.F.P. = 40.3 pcf (level backfill)
Friction Factor (Soil/Foundation) $\tan \phi = 0.50$

Stormwater Management Basin

A stormwater management basin is proposed at the southwest corner of the site. The site plan indicates that the basin will have a bottom elevation of +302. The elevation around the top of the basin will be +310. Existing grades within the basin area vary between elevation +310 and elevation +318. Based on the proposed and existing grades, a cut of 9 feet will be required to construct the basin.

Boring B-6 was advanced within the proposed basin area to determine the subsurface soil and groundwater conditions. The boring data indicates that the soil expected to be encountered at the bottom of the basin will be gray brown SILT, some (-) coarse to fine Sand. Laboratory gradation and hydrometer tests were performed on the soil samples collected from boring B-6 at depth intervals of 10'0" to 12'0" and 15'0" to 17'0". Based on the results of these tests we estimate that this soil will have a permeability rate of about 0.5 inches per hour.

Suitability of the On-Site Soil for Use as Compacted Fill

The soils likely to be encountered during construction include topsoil, sandy silt, and silty sand. Topsoil is not suitable for use as structural fill. The topsoil may be used in non-structural (landscape) areas.

The virgin sandy silt (Stratum 2) and silty sand (Stratum 3) beneath the surface topsoil contains a moderately high percentage (40% to 80% by weight) of fine grained soil passing a No. 200 sieve. These types of soil are very sensitive to moisture and may be difficult to place and compact to the proper density. In the event that the on-site soil becomes too wet for proper compaction, an imported sand and gravel containing less than 20% passing a No. 200 sieve should be used in the structural areas. Wet soil must be dried prior to placement.

The suitability of the on-site soils for use as compacted fill will be evaluated during construction by a representative from Carlin-Simpson & Associates. During the removal of soil from the building area, the Contractor should segregate the potentially suitable soil from the unsuitable soil. The representative from Carlin-Simpson & Associates will assist the Contractor by evaluating the material as it is being excavated. Potentially suitable fill material should be stockpiled and covered with tarps or plastic sheeting for protection from excessive moisture.

The stockpiled material shall be re-evaluated prior to its use as compacted fill. In the event that the on-site soil has become too wet, the material must be allowed to dry prior to its placement. If the material cannot be dried sufficiently for proper compaction, a drier on-site soil or imported fill will be required. Fill material that contains debris, wood, organics or other deleterious material is not suitable for use as compacted fill in the building and pavement areas.

GENERAL

The boring data indicates that the project site is underlain by sandy silt and silty sand. The site soils are capable of supporting the proposed building. Weathered bedrock may be encountered within the excavation for the basement and foundations. Where encountered, the rock should be removed at least one foot below the floor slab or footing elevation. The over-excavation should then be backfilled with new compacted fill.

Groundwater or perched water may be encountered in the basement and foundation excavations. Sumps and pumps should be used to remove the water. Soft subgrade soils should be removed and replaced with new compacted fill.

The new building foundations may be designed as shallow spread footings utilizing a net design bearing pressure of 2 TSF. The new foundations shall bear in either the sandy silt (Stratum 2) the silty sandy (Stratum 3) or the new compacted fill. The foundation bearing material must be approved by Carlin-Simpson & Associates prior to the placement of concrete. The building floor slabs may be designed as a concrete slab on grade bearing on the new compacted fill or virgin soil.

In order to provide continuity in this project, the Owner shall retain the services of Carlin-Simpson & Associates to provide full time geotechnical related inspection during construction. This should include the inspection of 1) the removal of unsuitable material from the planned building area; 2) the proofrolling of the subgrade soil prior to the placement of new compacted fill; 3) the placement and compaction of controlled fill; 4) the excavation for the building foundations; and 5) the preparation of the subgrade for the floor slab and pavement.

If the conditions encountered during construction vary significantly from those stated in this report, this office should be notified immediately so that further recommendations can be made.

Thank you for letting us assist you on this project.

Very truly yours,

CARLIN-SIMPSON & ASSOCIATES

ROBERT H. BARNES, P.E.
Project Engineer

ROBERT B. SIMPSON, P.E.

RHB/RBS:jw

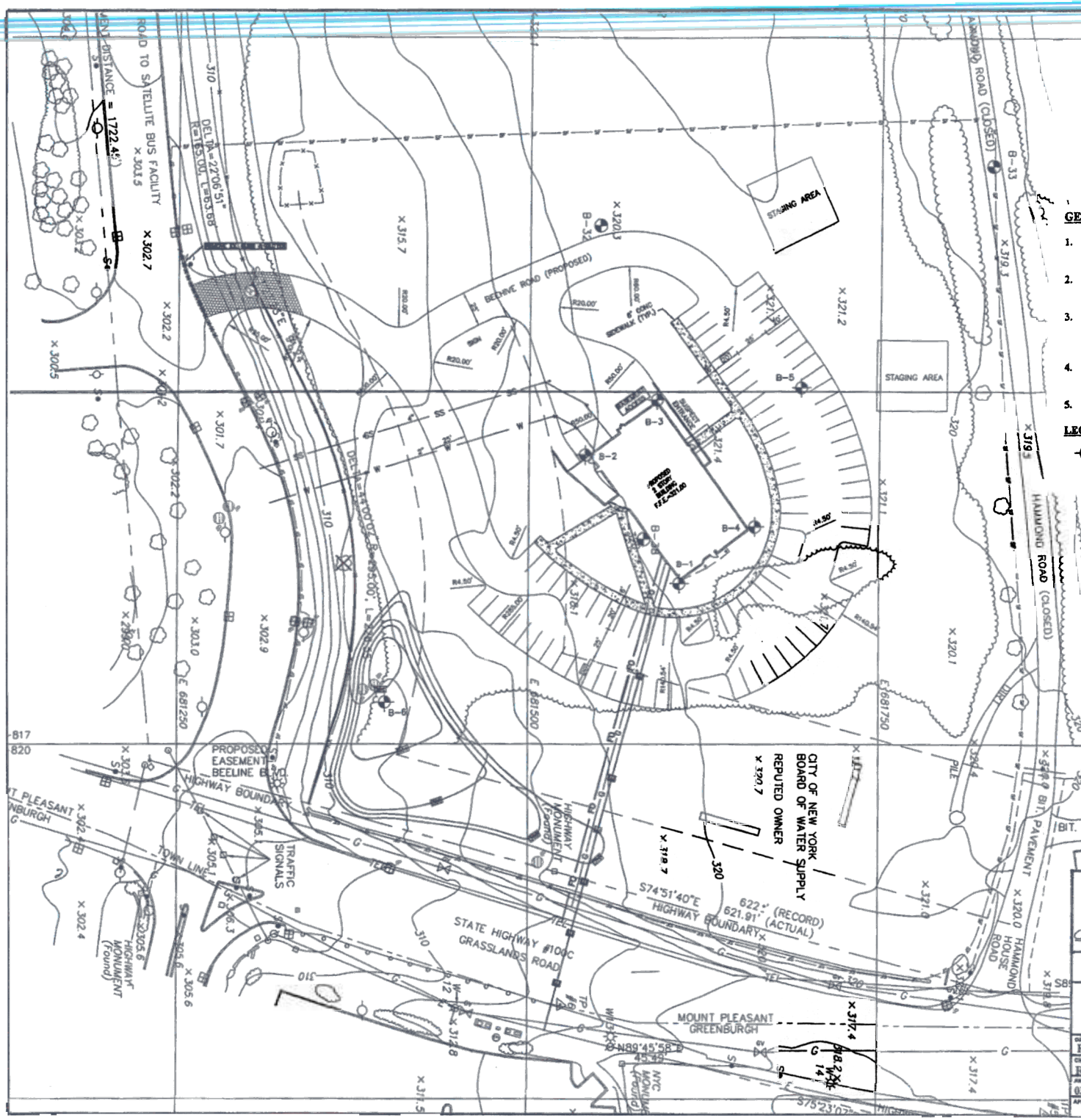

GENERAL NOTES

1. GENERAL LAYOUT WAS OBTAINED FROM A CAD DRAWING PROVIDED BY THE TAF GROUP.
2. BORINGS B-1 THROUGH B-6 WERE LAID OUT IN THE FIELD BY CARLIN-SIMPSON & ASSOCIATES (CSA).
3. BORINGS B-1 THROUGH B-6 WERE PERFORMED BY GENERAL BORINGS, INC. ON 8 SEPTEMBER 2003 UNDER FULL TIME INSPECTION OF CSA.
4. BORINGS B-32, B-33, B-34 AND B-38 WERE PERFORMED BY OTHERS.
5. LOCATIONS ARE APPROXIMATE.

LEGEND

BORING

ROBERT H. BARNES, P.E.
PROFESSIONAL ENGINEER

LICENSE No.	SIGNATURE	DATE
081297		10/15/03

BORING LOCATION PLAN

PROPOSED EAST OF HUDSON ADMINISTRATION BUILDING
GRASSLANDS ROAD (NYS ROUTE NO. 100C)
MOUNT PLEASANT, NEW YORK

DRAWN RHB	SCALE 1" = 50'
CHECKED RBS	DATE 14 OCT 03
PROJECT No. 03-78	DWG No. BLP-1
APPROVED	

CARLIN-SIMPSON & ASSOCIATES
61 Main Street
Sayreville, N. J. 08872
Consulting Geotechnical and Environmental Engineers

CARLIN - SIMPSON & ASSOCIATES Sayreville, NJ	TEST BORING LOG	BORING NUMBER B-1

Project:	East of Hudson Administration Building	Mt. Pleasant, NY	SHEET NO.: 1 of 1
Client:	The Taf Group		JOB NUMBER: 03-78
Drilling Contractor:	General Borings Inc.		ELEVATION: +320.5
			DATUM:
			START DATE: 08 Sep 03
			FINISH DATE: 08 Sep 03
			DRILLER: Mike J.
			INSPECTOR: MRR

GROUNDWATER

DATE	TIME	DEPTH	CASING
8 Sept 03	1030	18'0"	HSA

	CASING	SAMPLE	CORE	TUBE
TYPE	HSA	SS		
DIA.	3 1/4"	1 3/8"		
WGHT		140#		
FALL		30"		

Depth (ft.)	Casing Blows per Foot	Sample Number	Blows on Sample Spoon per 6"	Sym	IDENTIFICATION	REMARKS
			2		Brown TOPSOIL 0'4"	
1		S-1	2		Br $ s, cf S, t f G	Rec = 12"
			2			moist
2			2			
			4		Br cf S a (+) $, t mf G	
3		S-2	8			Rec = 24"
			10		Brown, gray brown SILT and,	moist
4			16		coarse to fine Sand, trace medium	
					to fine Gravel	
5						
			6		Gr br $ a, mf S	
6		S-3	12			Rec = 20"
			19			moist
7			25			
			16		same	
8		S-4	17			Rec = 18"
			18			moist
9			21			
10						
			9		same	
11		S-5	15			Rec = 24"
			18			moist
12			19			
13						
14					14'0"	
15						
			18		Gr br mf S, a $	
16		S-6	32			Rec = 24"
			35		Gray brown medium to fine	moist-wet
17			35		Sand, and Silt	very tight drilling
18						
19					19'0"	Auger refusal @ 19'0"
					End of Boring @ 19'0"	probable rock
20						
21						
22						

CARLIN - SIMPSON & ASSOCIATES Sayreville, NJ	TEST BORING LOG	BORING NUMBER B-2
Project: East of Hudson Administration Building	Mt. Pleasant, NY	SHEET NO.: 1 of 1
Client: The Taf Group		JOB NUMBER: 03-78
Drilling Contractor: General Borings Inc.		ELEVATION: +319.8
		DATUM:
		START DATE: 08 Sep 03
		FINISH DATE: 08 Sep 03
		DRILLER: Mike J.
		INSPECTOR: MRR/GJ

GROUNDWATER					CASING	SAMPLE	CORE	TUBE
DATE	TIME	DEPTH	CASING	TYPE	HSA	SS		
8 Sept 03	1150	14'0"	open	DIA.	3 1/4"	1 3/8"		
	1200	caved @11'0"		WGHT		140#		
				FALL		30"		

Depth (ft.)	Casing Blows per Foot	Sample Number	Blows on Sample Spoon per 6"	Sym	IDENTIFICATION	REMARKS
			1		Gray brown TOPSOIL 0'6"	
1		S-1	1		Br $ l, cf S, t cf G	Rec = 8"
			2			moist
2			1			
			10		Gr br $ s, cf S, t cf G	
3		S-2	15			Rec = 22"
			17		Brown, gray brown SILT and,	moist
4			18		coarse to fine Sand, trace fine Gravel	
5						
			10		Br $ a (-), cf S, t (-) f G	
6		S-3	9			Rec = 24"
			9			moist
7			13			
8						
9						
10					10'0"	
			9		Gr br $ l, mf S	
11		S-4	12			Rec = 24"
			15			moist
12			19			
13					Gray brown SILT little,	
14					medium to fine Sand	
15						
			20		same	
16		S-5	26			Rec = 24"
			34			moist
17			37			
18						very tight drilling 15'-20'
19						
20						
			33		Gr $ l, mf S	
		S-6	37			Rec =24"
			40			moist
22			45		End of Boring @ 22'0" 22'0"	

CARLIN - SIMPSON & ASSOCIATES Sayreville, NJ	TEST BORING LOG	BORING NUMBER B-3

Project:	East of Hudson Administration Building	Mt. Pleasant, NY	SHEET NO.: 1 of 1
Client:	The Taf Group		JOB NUMBER: 03-78
Drilling Contractor:	General Borings Inc.		ELEVATION: +321.0

GROUNDWATER					CASING	SAMPLE	CORE	TUBE	DATUM:
DATE	TIME	DEPTH	CASING	TYPE	HSA	SS			START DATE: 08 Sep 03
				DIA.	3 1/4"	1 3/8"			FINISH DATE: 08 Sep 03
No water encountered				WGHT		140#			DRILLER: Mike J.
				FALL		30"			INSPECTOR: MRR

Depth (ft.)	Casing Blows per Foot	Sample Number	Blows on Sample Spoon per 6"	Sym	IDENTIFICATION	REMARKS
			1		Gray brown TOPSOIL 0'6"	
1		S-1	1		Br $ s(-), cf S, t f G	Rec = 18"
			2			moist
2			4			
			12		same, mf S	
3		S-2	19			Rec = 24"
			22			moist
4			22			
5						
			12		Gr br, same	
6		S-3	12			Rec = 24"
			15		Brown, gray brown, gray SILT	moist
7			16		some (-) coarse to fine Sand	
8						
9						
10						
			21		Gr, same	
11		S-4	30			Rec = 22"
			41			moist
12			50/5"			
						very tight drilling
13						
14						
15						
		S-5	50/1"		same, w/weathered rock 15'1"	Rec = 1"
16					End of Boring @ 15'1"	moist
						spoon refusal @ 15'1"
17						probable rock
18						
19						
20						
21						

B-4

Project:	East of Hudson Administration Building	Mt. Pleasant, NY	SHEET NO.: 1 of 1
Client:	The Taf Group		JOB NUMBER: 03-78
Drilling Contractor:	General Borings Inc.		ELEVATION: +321.3

GROUNDWATER					CASING	SAMPLE	CORE	TUBE	DATUM:
DATE	TIME	DEPTH	CASING	TYPE	HSA	SS			START DATE: 08 Sep 03
				DIA.	3 1/4"	1 3/8"			FINISH DATE: 08 Sep 03
No water encountered				WGHT		140#			DRILLER: Mike J.
				FALL		30"			INSPECTOR: MRR

Depth (ft.)	Casing Blows per Foot	Sample Number	Blows on Sample Spoon per 6"	Sym	IDENTIFICATION	REMARKS
			1		Gray brown TOPSOIL 0'6"	
1		S-1	2		Br $ t, cf S, t f G	Rec = 18"
			2			moist
2			5			
			12		Gr br $ s, cf S	
3		S-2	15			Rec = 24"
			16		Brown, gray brown, gray SILT	moist
4			18		some, coarse to fine Sand	
5						
			8		same	
6		S-3	7			Rec = 24"
			11			moist
7			17			
9						
10						
			10		same	
11		S-4	13			Rec = 22"
			14			moist
12			22			very tight drilling
13						
14						
15						
			27		Gr, same	
16		S-5	29			Rec = 18"
			38			
17			50/1"		16'7"	spoon refusal @ 16'7"
18					End of Boring @ 16'7"	
19						
20						
21						
22						

CARLIN - SIMPSON & ASSOCIATES Sayreville, NJ	TEST BORING LOG	BORING NUMBER B-5

Project:	East of Hudson Administration Building	Mt. Pleasant, NY	SHEET NO.: 1 of 1
Client:	The Taf Group		JOB NUMBER: 03-78
Drilling Contractor:	General Borings Inc.		ELEVATION: +321.3

GROUNDWATER					CASING	SAMPLE	CORE	TUBE	DATUM:
DATE	TIME	DEPTH	CASING	TYPE	HSA	SS			START DATE: 08 Sep 03
				DIA.	3 1/4"	1 3/8"			FINISH DATE: 08 Sep 03
No water encountered				WGHT		140#			DRILLER: Mike J.
				FALL		30"			INSPECTOR: MRR

Depth (ft.)	Casing Blows per Foot	Sample Number	Blows on Sample Spoon per 6"	Sym	IDENTIFICATION	REMARKS
			1		Brown TOPSOIL 0'6"	
1		S-1	1		Br $ s (-), cf S, t cf G	Rec = 14"
			24			moist
2			8			enc. cobble
			10		Gr br $ l, mf S	
3		S-2	14			Rec = 24"
			18		Brown, gray brown SILT	moist
4			22		some, coarse to fine Sand	
5						
			9		same	
6		S-3	11			Rec = 24"
			18			moist
7			33			
			12		same	
8		S-4	22			Rec = 24"
			27			moist
9			29		9'0"	
					End of Boring @ 9'0"	
10						
11						
12						
13						
14						
15						
16						
17						
18						
19						
20						
21						
22						

CARLIN - SIMPSON & ASSOCIATES Sayreville, NJ	TEST BORING LOG	BORING NUMBER B-6

Project:	East of Hudson Administration Building	Mt. Pleasant, NY	SHEET NO.: 1 of 1
Client:	The Taf Group		JOB NUMBER: 03-78
Drilling Contractor:	General Borings Inc.		ELEVATION: +311.5

GROUNDWATER					CASING	SAMPLE	CORE	TUBE	DATUM:
DATE	TIME	DEPTH	CASING	TYPE	HSA	SS			START DATE: 08 Sep 03
				DIA.		1 3/8"			FINISH DATE: 08 Sep 03
No water encountered				WGHT		140#			DRILLER: Mike J.
				FALL		30"			INSPECTOR: MRR

Depth (ft.)	Casing Blows per Foot	Sample Number	Blows on Sample Spoon per 6"	Sym	IDENTIFICATION	REMARKS
			2		Brown TOPSOIL 0'6"	
1		S-1	3		Br $ s, cf S, t cf G	Rec = 12"
			4			moist
2			5			
			11		Gr br same, s cf S	
3		S-2	10			Rec = 20"
			11			moist
4			12			
5					Brown, gray brown, gray SILT some, coarse to fine Sand, trace fine Gravel	
			9			
6		S-3	10			Rec = 0
			12			
7			12			
			9			
8		S-4	10		same	Rec = 24"
			12			moist
9			15			
10						
			22		Gr br $ s (-), cf S	
11		S-5	46			Rec = 18"
			49			moist
12			62			
13						
14						
15						
			17		Gr $ a (-), cf S, t (-) f G	
16		S-6	31			Rec = 22"
			36			moist
17			44		17'0"	
18					End of Boring @ 17'0"	
19						
20						
21						
22						

CARLIN • SIMPSON & ASSOCIATES
Sayreville, N.J. 08872

SIEVE ANALYSIS

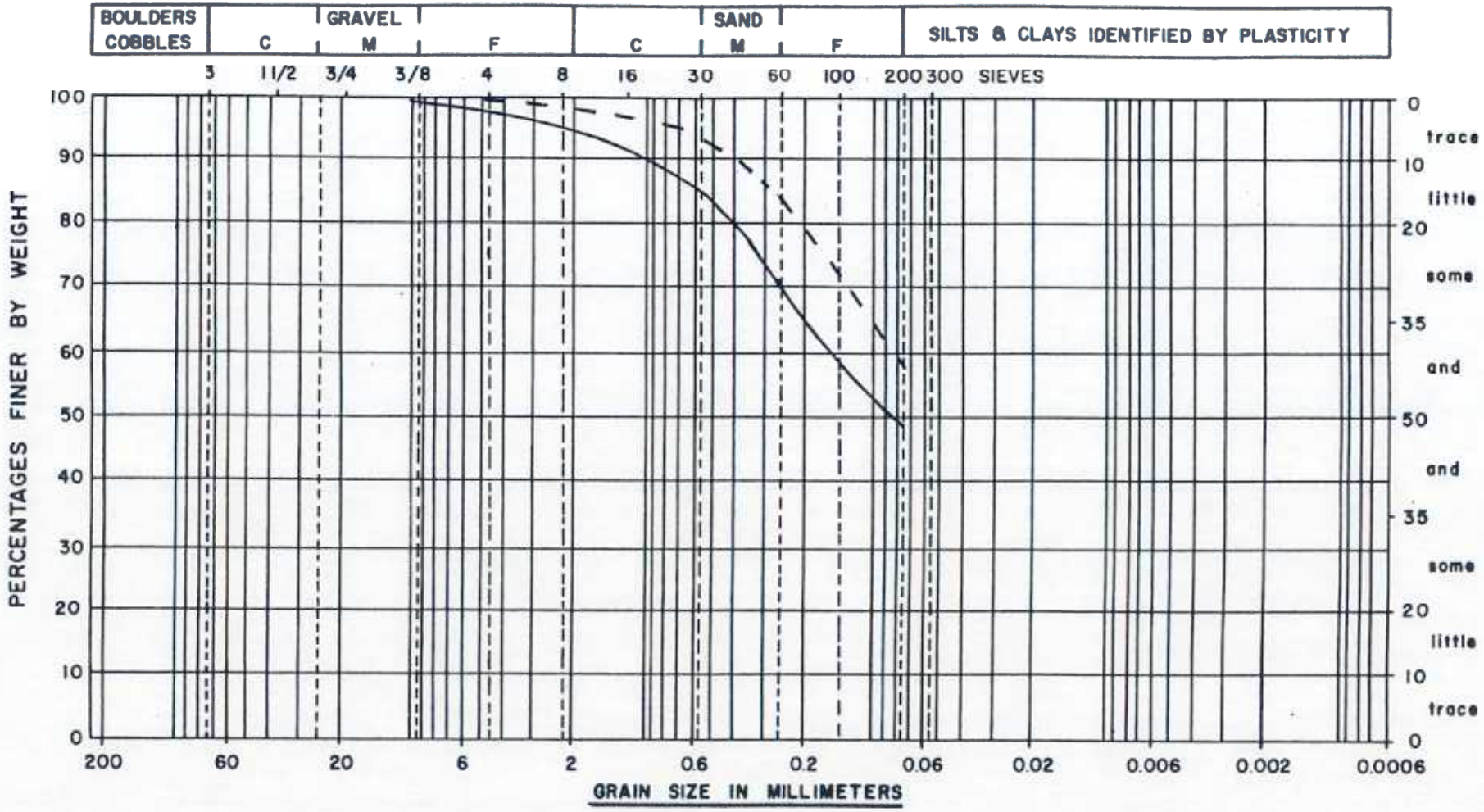

SYMBOL	BORING	SAMPLE	DEPTH	DESCRIPTION
———	B-1	S-2	2'-4'	Brown coarse to fine Sand, and (+) Silt, trace medium to fine Gravel
— —	B-2	S-3	5'-7'	Brown SILT and, coarse to fine Sand, trace (-) fine Gravel

CT East n, Administration Building BY LYD DATE 11 Oct 03 JOB No. 03-78
, NY

Sayreville, N.J. 08872

SIEVE ANALYSIS

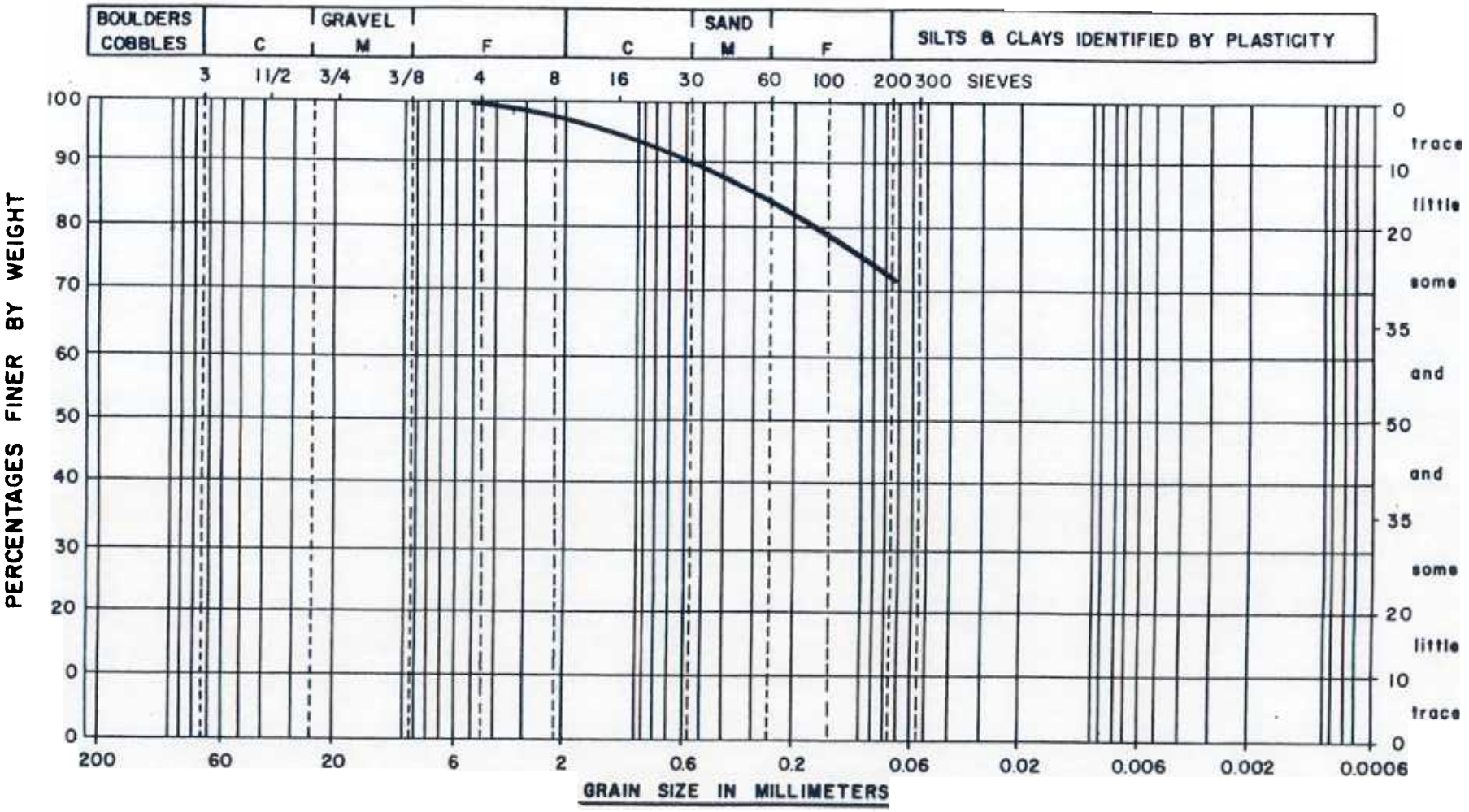

SYMBOL	BORING	SAMPLE	DEPTH	DESCRIPTION
———	B-5		0'-3'	Brown SILT some (-), coarse to fine Sand, trace fine Gravel

PROJECT [illegible] BY [illegible] DATE 11 Oct 03 JOB No. 03-78

[illegible]asant, NY

Sayreville, N.J. 08872

SIEVE ANALYSIS

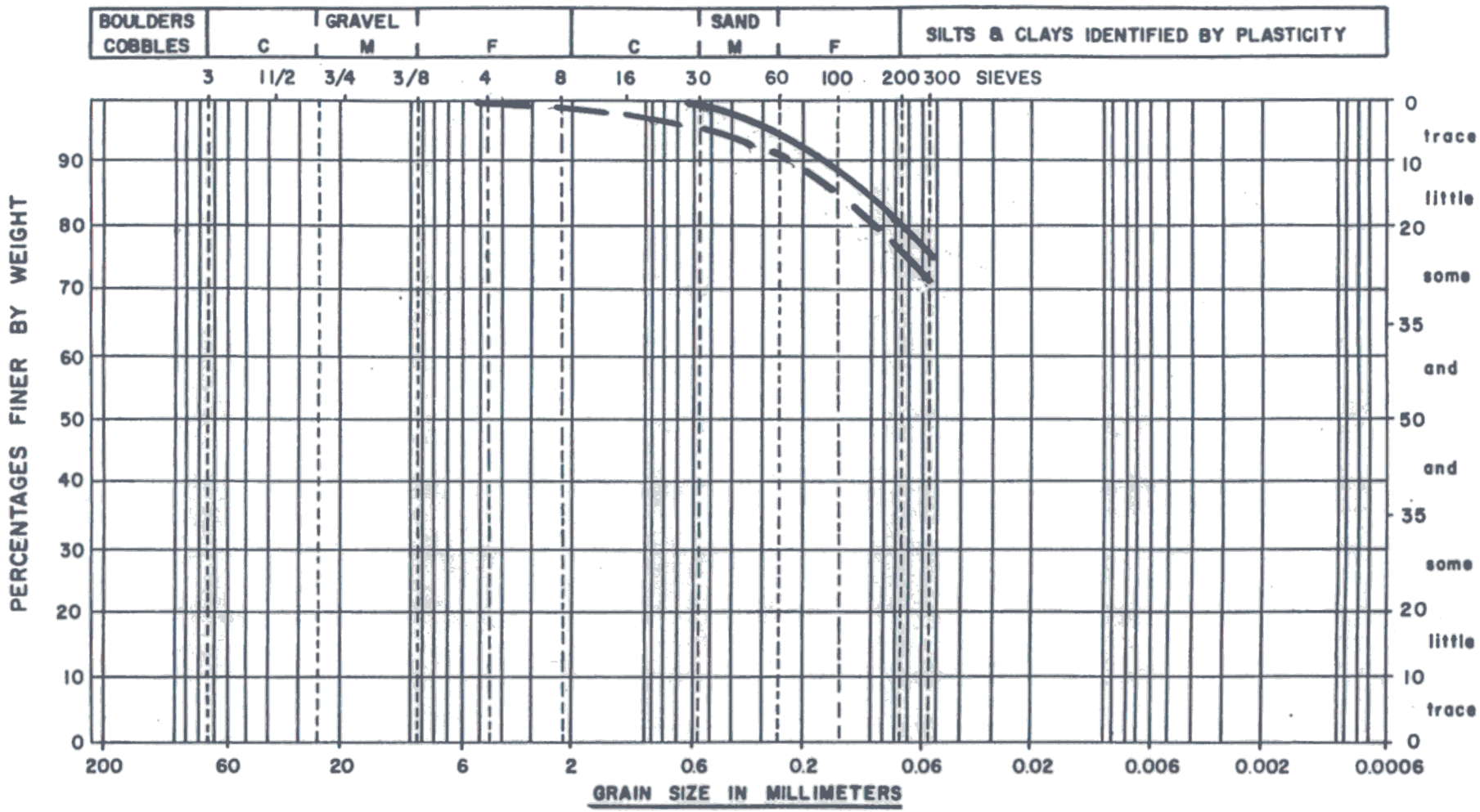

SYMBOL	BORING	SAMPLE	DEPTH	DESCRIPTION
———	B-6	S-5	10'-12'	Gray brown SILT some (-) coarse to fine Sand
— —	B-6	S-6	15'-17'	Gray SILT and (-), coarse to fine Sand, trace (-) fine Gravel

PROJECT East of Hudson Administration Building
Mt. Pleasant, NY

BY LYD **DATE** 11 Oct 03 **JOB No.** 03-78

APPENDIX

Limitations

A. USE OF REPORT BY PROSPECTIVE BIDDERS

This soil and foundation engineering report was prepared for the referenced project by Carlin - Simpson & Associates for design purposes only, and may not be sufficient to prepare an accurate bid. Contractors utilizing the information in the report should do so with the understanding that our scope is limited to design considerations. Prospective bidders should obtain the owner's permission to perform whatever additional explorations they deem necessary to prepare their bid accurately.

B. APPLICABILITY OF REPORT

This report has been prepared in accordance with generally accepted soils and foundation engineering practices for the exclusive use of The TAF Group for the specific application for the design of the proposed project. No other warranty, expressed or implied, is made.

This report may be referred to in the project specifications for general information purposes only, and it should not be used as the technical specifications for the earth work, as it was prepared for design purposes exclusively.

C. REINTERPRETATION OF RECOMMENDATIONS

Change in Location or Nature of Facilities: In the event that any changes in the nature, design or location of the project are planned, the conclusions and recommendations contained in this report shall not be considered valid unless the changes are reviewed and conclusions of this report modified or verified in writing.

Changed Conditions During Construction: The analyses and recommendations submitted in this report are based in part upon the data obtained from test explorations performed for this study. The nature and extent of variations between the test explorations may not become evident until construction. If subsurface soil, rock or groundwater variations appear during construction, it will be necessary to re-evaluate the recommendations of this report.

Changes in State-of-the-Art: The conclusions and recommendations contained in this report are based upon the applicable standards of our profession at the time this report was prepared.

D. SUBSURFACE INFORMATION

Locations: The location of each test exploration was established in the field by measurement from some known building or topographic feature shown on site plans provided to our office. The ground surface elevations of the explorations were determined from the topographic survey supplied to this office. The locations and elevations of the test explorations should be considered approximate only to the degree implied by the method used.

Interface of Strata: The stratification lines shown on the individual logs of the subsurface test explorations represent the approximate boundary between soil types, and the transition may be gradual.

Field Logs/Final Logs: A field log was prepared for each test exploration by a member of our staff. The field log contains factual information and interpretation of the soil conditions between samples.

Our recommendations are based on the final logs and the information contained therein, and not on the field logs.

The final logs represent our interpretation of the contents of the field logs, and the results of the laboratory observations and tests of the field samples. The final logs are included in this engineering report.

Standard Method of Sampling: All subsurface explorations proceed to a depth based on soil type and structure and proposed construction. Sampling is performed typically at changes in soil conditions so as to provide a representative view of subsurface conditions.

Water Levels: Water level observations in each test exploration were made for the conditions and times stated on the individual logs. This data was reviewed and interpretations were made for the preparation of this report. It must be noted that fluctuations in the level of the groundwater may occur due to variations in rainfall, temperature, and other meteorological factors.

Pollution/Contamination: Unless specifically indicated in this report, the scope of our services was limited only to the investigation and the evaluation of the geotechnical engineering aspects of the subsurface soil and groundwater conditions at the referenced site. This report does not include any consideration of potential site pollution or contamination resulting from the presence of chemicals, metals, radioactive elements, etc. unless specifically identified in this report.

Environmental Considerations: Unless specifically indicated in the text of this report, this report does not address environmental considerations which may affect the site development, e.g., wetlands determinations, flora and fauna,, etc. The conclusions and recommendations of this report are not intended to supersede any environmental conditions which should be addressed in the overall site planning.

E. CONSTRUCTION OBSERVATIONS

We recommend that Carlin -Simpson & Associates be retained to provide continuous on-site soils engineering services during the earthwork construction and foundation phases of the planned construction. This is to assure that the work is completed in compliance with the design concepts and to allow for design changes in the event that subsurface conditions differ from those anticipated during the planned construction.

Attachment 6 - Site Photos

Intersection of Walker Road & Grasslands Road 100C.

Site as seen from Walker Road.

Site as seen from Grasslands Road 100C.

Historic Hammond House as seen from Grasslands Road 100C.

Attachment 7 - Leed Checklist

LEED Version 2.1 Registered Project Checklist

LEADERSHIP IN ENERGY & ENVIRONMENTAL DESIGN

Project Name

City, State

Yes	?	No			
1	9	4	**Sustainable Sites**		**14** Points
Y			Prereq 1	**Erosion & Sedimentation Control**	Required
1			Credit 1	**Site Selection**	1
		1	Credit 2	**Urban Redevelopment**	1
		1	Credit 3	**Brownfield Redevelopment**	1
		1	Credit 4.1	**Alternative Transportation**, Public Transportation Access	1
	1		Credit 4.2	**Alternative Transportation**, Bicycle Storage & Changing Rooms	1
	1		Credit 4.3	**Alternative Transportation**, Alternative Fuel Vehicles	1
	1		Credit 4.4	**Alternative Transportation**, Parking Capacity and Carpooling	1
	1		Credit 5.1	**Reduced Site Disturbance**, Protect or Restore Open Space	1
	1		Credit 5.2	**Reduced Site Disturbance**, Development Footprint	1
	1		Credit 6.1	**Stormwater Management**, Rate and Quantity	1
	1		Credit 6.2	**Stormwater Management**, Treatment	1
		1	Credit 7.1	**Landscape & Exterior Design to Reduce Heat Islands**, Non-Roof	1
	1		Credit 7.2	**Landscape & Exterior Design to Reduce Heat Islands**, Roof	1
	1		Credit 8	**Light Pollution Reduction**	1

Yes	?	No			
1	4		**Water Efficiency**		**5** Points
	1		Credit 1.1	**Water Efficient Landscaping**, Reduce by 50%	1
1			Credit 1.2	**Water Efficient Landscaping**, No Potable Use or No Irrigation	1
	1		Credit 2	**Innovative Wastewater Technologies**	1
	1		Credit 3.1	**Water Use Reduction**, 20% Reduction	1
	1		Credit 3.2	**Water Use Reduction**, 30% Reduction	1

Yes	?	No			
	16	1	**Energy & Atmosphere**		**17** Points
Y			Prereq 1	**Fundamental Building Systems Commissioning**	Required
Y			Prereq 2	**Minimum Energy Performance**	Required
Y			Prereq 3	**CFC Reduction in HVAC&R Equipment**	Required
	10		Credit 1	**Optimize Energy Performance**	1 to 10
	1		Credit 2.1	**Renewable Energy**, 5%	1
	1		Credit 2.2	**Renewable Energy**, 10%	1
	1		Credit 2.3	**Renewable Energy**, 20%	1
	1		Credit 3	**Additional Commissioning**	1
	1		Credit 4	**Ozone Depletion**	1
	1		Credit 5	**Measurement & Verification**	1
		1	Credit 6	**Green Power**	1

Yes	?	No			
	8	5	**Materials & Resources**		**13** Points
Y			Prereq 1	**Storage & Collection of Recyclables**	Required
		1	Credit 1.1	**Building Reuse**, Maintain 75% of Existing Shell	1
		1	Credit 1.2	**Building Reuse**, Maintain 100% of Shell	1
		1	Credit 1.3	**Building Reuse**, Maintain 100% Shell & 50% Non-Shell	1
	1		Credit 2.1	**Construction Waste Management**, Divert 50%	1
	1		Credit 2.2	**Construction Waste Management**, Divert 75%	1
		1	Credit 3.1	**Resource Reuse**, Specify 5%	1
		1	Credit 3.2	**Resource Reuse**, Specify 10%	1
	1		Credit 4.1	**Recycled Content**, Specify 5% (post-consumer + ½ post-industrial)	1
	1		Credit 4.2	**Recycled Content**, Specify 10% (post-consumer + ½ post-industrial)	1
	1		Credit 5.1	**Local/Regional Materials**, 20% Manufactured Locally	1
	1		Credit 5.2	**Local/Regional Materials**, of 20% Above, 50% Harvested Locally	1
	1		Credit 6	**Rapidly Renewable Materials**	1
	1		Credit 7	**Certified Wood**	1

Yes	?	No			
	13	2	**Indoor Environmental Quality**		**15** Points
Y			Prereq 1	**Minimum IAQ Performance**	Required
Y			Prereq 2	**Environmental Tobacco Smoke** (ETS) **Control**	Required
	1		Credit 1	**Carbon Dioxide** (CO_2) **Monitoring**	1
	1		Credit 2	**Ventilation Effectiveness**	1
	1		Credit 3.1	**Construction IAQ Management Plan**, During Construction	1
	1		Credit 3.2	**Construction IAQ Management Plan**, Before Occupancy	1
	1		Credit 4.1	**Low-Emitting Materials**, Adhesives & Sealants	1
	1		Credit 4.2	**Low-Emitting Materials**, Paints	1
	1		Credit 4.3	**Low-Emitting Materials**, Carpet	1
	1		Credit 4.4	**Low-Emitting Materials**, Composite Wood & Agrifiber	1
	1		Credit 5	**Indoor Chemical & Pollutant Source Control**	1
	1		Credit 6.1	**Controllability of Systems**, Perimeter	1
	1		Credit 6.2	**Controllability of Systems**, Non-Perimeter	1
	1		Credit 7.1	**Thermal Comfort**, Comply with ASHRAE 55-1992	1
	1		Credit 7.2	**Thermal Comfort**, Permanent Monitoring System	1
		1	Credit 8.1	**Daylight & Views**, Daylight 75% of Spaces	1
		1	Credit 8.2	**Daylight & Views**, Views for 90% of Spaces	1

Yes	?	No			
	5		**Innovation & Design Process**		**5** Points
	1		Credit 1.1	**Innovation in Design**: Provide Specific Title	1
	1		Credit 1.2	**Innovation in Design**: Provide Specific Title	1
	1		Credit 1.3	**Innovation in Design**: Provide Specific Title	1
	1		Credit 1.4	**Innovation in Design**: Provide Specific Title	1
	1		Credit 2	**LEED™ Accredited Professional**	1

Yes	?	No		
2	55	12	**Project Totals** **(pre-certification estimates)**	**69** Points

Certified 26-32 points **Silver** 33-38 points **Gold** 39-51 points **Platinum** 52-69 points